BELLSOUTH® / CLEC Agreement

Customer Name: DPI-Teleconnect, LLC

DPI-Teleconnect, LLC	3
Table of Contents	4
General Terms and Conditions	6
Att 1 - Resale	25
Att 1 - Resale Discounts and Rates	51
Att 2 - UNEs	60
Att 2 - UNE Rates	134
Att 3 - Network Interconnection	554
Att 3 - Local Interconnection Rates	583
Att 4 - Collocation - Central Office	592
Att 4 - Collocation - Remote Site	632
Att 4 - Collocation Rates	666
Att 5 - Access to Numbers and Number Portability	714
Att 6 - Ordering	718
Att 7 - Billing	725
Att 7 - ODUF ADUF EODUF CMDS Rates	742
Att 8 - Rights of Way	751
Att 9 - Performance Measurements	753
Att 10 - Disaster Recovery Plan	906
Att 11 - BFR and NBR Process	915
DPI Teleconnect, LLC TRO Amendment	920
DPI-Teleconnect, LLC - LNP Recovery Amendment	1340
DPI-Teleconnect, LLC Attachment 2 Amendment	1342
DPI GA_UNE_Rate_Remand_Amendment	1481
DPI SC_COL_Amendment_with_CA_&_Amended_IA	1498
DPI NC_COL_Amendment_with_CA_&_Amended_IA	1535
DPI FL COL - CA and Amd	1581

Note: This page is not part of the actual signed contract/amendment, but is present for record keeping purposes only.

BELLSOUTH® / CLEC Agreement

DPI LA COL Amendment	1624
DPI GA COL	1665
DPI MS COL - CA and Amd	1703

Note: This page is not part of the actual signed contract/amendment, but is present for record keeping purposes only.

INTERCONNECTION
AGREEMENT
BETWEEN
BELLSOUTH TELECOMMUNICATIONS INC.
AND
DPI-TELECONNECT, LLC

TABLE OF CONTENTS

General Terms and Conditions

Definitions
1. CLEC Certification
2. Term of the Agreement
3. Operational Support Systems
4. Parity
5. White Pages Listings
6. Court Ordered Requests for Call Detail Records and Other Subscriber Information
7. Liability and Indemnification
8. Intellectual Property Rights and Indemnification
9. Proprietary and Confidential Information
10. Resolution of Disputes
11. Taxes
12. Force Majeure
13. Adoption of Agreements
14. Modification of Agreement
15. Non-waiver of Legal Rights
16. Indivisibility
17. Waivers
18. Governing Law
19. Assignments
20. Notices
21. Rule of Construction
22. Headings of No Force or Effect
23. Multiple Counterparts
24. Filing of Agreement
25. Compliance with Applicable Law
26. Necessary Approvals
27. Good Faith Performance
28. Nonexclusive Dealings
29. Rate True-Up
30. Survival
31. Entire Agreement

TABLE OF CONTENTS (cont'd)

Attachment 1 - Resale

Attachment 2 - Network Elements and Other Services

Attachment 3 - Network Interconnection

Attachment 4 - Physical Collocation

Attachment 5 - Access to Numbers and Number Portability

Attachment 6 – Pre-Ordering, Ordering, Provisioning, Maintenance and Repair

Attachment 7 - Billing

Attachment 8 - Rights-of-Way, Conduits and Pole Attachments

Attachment 9 - Performance Measurements

Attachment 10- BellSouth Disaster Recovery Plan

Attachment 11–Bona Fide Request/New Business Request Process

AGREEMENT
GENERAL TERMS AND CONDITIONS

THIS AGREEMENT is made by and between BellSouth Telecommunications, Inc., (BellSouth), a Georgia corporation, and DPI-Teleconnect, LLC (DPI), a Delaware corporation, and shall be effective on the Effective Date, as defined herein. This Agreement may refer to either BellSouth or DPI or both as a "Party" or "Parties."

W I T N E S S E T H

WHEREAS, BellSouth is a local exchange telecommunications company authorized to provide telecommunications services in the states of Alabama, Florida, Georgia, Kentucky, Louisiana, Mississippi, North Carolina, South Carolina and Tennessee; and

WHEREAS, DPI is or seeks to become a CLEC authorized to provide telecommunications services in the states of Alabama, Florida, Georgia, Kentucky, Louisiana, Mississippi, North Carolina, South Carolina, and Tennessee; and

WHEREAS, DPI wishes to resell BellSouth's telecommunications services and purchase network elements and other services, and, solely in connection therewith, may wish to utilize collocation space as set forth in Attachment 4 of this Agreement); and

WHEREAS, the Parties wish to interconnect their facilities and exchange traffic pursuant to Sections 251 and 252 of the Act.

NOW THEREFORE, in consideration of the mutual agreements contained herein, BellSouth and DPI agree as follows:

Definitions

Affiliate is defined as a person that (directly or indirectly) owns or controls, is owned or controlled by, or is under common ownership or control with, another person. For purposes of this paragraph, the term "own" means to own an equity interest (or equivalent thereof) of more than 10 percent.

Commission is defined as the appropriate regulatory agency in each state of BellSouth's nine-state region (Alabama, Florida, Georgia, Kentucky, Louisiana, Mississippi, North Carolina, South Carolina, and Tennessee).

Competitive Local Exchange Carrier (CLEC) means a telephone company certificated by the Commission to provide local exchange service within BellSouth's franchised area.

Effective Date is defined as the date that the Agreement is effective for purposes of rates, terms and conditions and shall be thirty (30) days after the date of the last signature executing the Agreement. Future amendments for rate changes will also be effective thirty (30) days after the date of the last signature executing the amendment.

End User means the ultimate user of the Telecommunications Service.

FCC means the Federal Communications Commission.

General Terms and Conditions means this document including all of the terms, provisions and conditions set forth herein.

Telecommunications means the transmission, between or among points specified by the user, of information of the user's choosing, without change in the form or content of the information as sent and received.

Telecommunications Service means the offering of telecommunications for a fee directly to the public, or to such classes of users as to be effectively available directly to the public, regardless of the facilities used.

Telecommunications Act of 1996 (Act) means Public Law 104-104 of the United States Congress effective February 8, 1996. The Act amended the Communications Act of 1934 (47 U.S.C. Section 1 et. seq.).

1. CLEC Certification

1.1 Prior to execution of this Agreement, DPI agrees to provide BellSouth in writing DPI's CLEC certification for all states covered by this Agreement except Kentucky prior to BellSouth filing this Agreement with the appropriate Commission for approval.

1.2 To the extent DPI is not certified as a CLEC in each state covered by this Agreement as of the execution hereof, DPI will notify BellSouth in writing and provide CLEC certification when it becomes certified to operate in any other state covered by this Agreement. Upon notification, BellSouth will file this Agreement with the appropriate Commission for approval.

2. Term of the Agreement

2.1 The term of this Agreement shall be three years, beginning on the Effective Date and shall apply to the BellSouth territory in the state(s) of Alabama, Florida, Georgia, Kentucky, Louisiana, Mississippi, North Carolina, South Carolina and Tennessee. Notwithstanding any prior agreement of the Parties, the rates, terms and conditions of this Agreement shall not be applied retroactively prior to the Effective Date.

2.2 The Parties agree that by no earlier than two hundred seventy (270) days and no later than one hundred and eighty (180) days prior to the expiration of this Agreement, they shall commence negotiations for a new agreement to be effective beginning on the expiration date of this Agreement (Subsequent Agreement).

2.3 If, within one hundred and thirty-five (135) days of commencing the negotiation referred to in Section 2.2 above, the Parties are unable to negotiate new terms, conditions and prices for a Subsequent Agreement, either Party may petition the Commission to establish appropriate terms, conditions and prices for the Subsequent Agreement pursuant to 47 U.S.C. 252.

2.4 If, as of the expiration of this Agreement, a Subsequent Agreement has not been executed by the Parties, this Agreement shall terminate. Upon termination of this Agreement, BellSouth shall continue to offer services to DPI pursuant to the terms, conditions and rates set forth in BellSouth's then current standard interconnection agreement. In the event that BellSouth's standard interconnection agreement becomes effective as between the Parties, the Parties may continue to negotiate a Subsequent Agreement or arbitrate disputed issues to reach a Subsequent Agreement as set forth in Section 2.3 above, and the terms of such Subsequent Agreement shall be effective as of the effective date as stated in the Subsequent Agreement.

3. Operational Support Systems

DPI shall pay charges for Operational Support Systems (OSS) as set forth in this Agreement.

4. Parity

When DPI purchases Telecommunications Services from BellSouth pursuant to Attachment 1 of this Agreement for the purposes of resale to End Users, such services shall be equal in quality, subject to the same conditions, and provided within the same provisioning time intervals that BellSouth provides to its Affiliates, subsidiaries and End Users. To the extent technically feasible, the quality of a Network Element, as well as the quality of the access to such Network Element provided by BellSouth to DPI shall be at least equal in quality to that which BellSouth provides to itself, its Affiliates or any other Telecommunications carrier. The quality of the interconnection between the network of BellSouth and the network of DPI shall be at a level that is equal to that which BellSouth provides itself, a subsidiary, an Affiliate, or any other party. The interconnection facilities shall be designed to meet the same technical criteria and service standards that are used within BellSouth’s network and shall extend to a consideration of service quality as perceived by BellSouth’s End Users and service quality as perceived by DPI.

5. White Pages Listings

5.1 BellSouth shall provide DPI and its customers access to white pages directory listings under the following terms:

5.1.1 Listings. DPI shall provide all new, changed and deleted listings on a timely basis and BellSouth or its agent will include DPI residential and business customer listings in the appropriate White Pages (residential and business) or alphabetical directories in the geographic areas covered by this Interconnection Agreement. Directory listings will make no distinction between DPI and BellSouth subscribers.

5.1.2 Rates. So long as DPI provides subscriber listing information (SLI) to BellSouth in accordance with Section 5.2 below, BellSouth shall provide to DPI one (1) primary White Pages listing per DPI subscriber at no charge other than applicable service order charges as set forth in BellSouth's tariffs.

5.2 Procedures for Submitting DPI SLI are found in The BellSouth Business Rules for Local Ordering.

5.2.1 DPI authorizes BellSouth to release all DPI SLI provided to BellSouth by DPI to qualifying third parties via either license agreement or BellSouth's Directory Publishers Database Service (DPDS), General Subscriber Services Tariff (GSST), Section A38.2, as the same may be amended from time to time. Such DPI SLI shall be intermingled with BellSouth's own customer listings and listings of any other CLEC that has authorized a similar release of SLI.

5.2.2 No compensation shall be paid to DPI for BellSouth's receipt of DPI SLI, or for the subsequent release to third parties of such SLI. In addition, to the extent BellSouth incurs costs to modify its systems to enable the release of DPI's SLI, or costs on an ongoing basis to administer the release of DPI SLI, DPI shall pay to BellSouth its proportionate share of the reasonable costs associated therewith. At any time that costs may be incurred to administer the release of DPI's SLI, DPI will be notified. If DPI does not wish to pay its proportionate share of these reasonable costs, DPI may instruct BellSouth that it does not wish to release its SLI to independent publishers, and DPI shall amend this Agreement accordingly. DPI will be liable for all costs incurred until the effective date of the amendment.

5.2.3 Neither BellSouth nor any agent shall be liable for the content or accuracy of any SLI provided by DPI under this Agreement. DPI shall indemnify, hold harmless and defend BellSouth and its agents from and against any damages, losses, liabilities, demands, claims, suits, judgments, costs and expenses (including but not limited to reasonable attorneys' fees and expenses) arising from BellSouth's tariff obligations or otherwise and resulting from or arising out of any third party's claim of inaccurate DPI listings or use of the SLI provided pursuant to this Agreement. BellSouth may forward to DPI any complaints received by BellSouth relating to the accuracy or quality of DPI listings.

5.2.4 Listings and subsequent updates will be released consistent with BellSouth system changes and/or update scheduling requirements.

5.3 Unlisted/Non-Published Subscribers. DPI will be required to provide to BellSouth the names, addresses and telephone numbers of all DPI customers who wish to be

omitted from directories. Unlisted/Non-Published SLI will be subject to the rates as set forth in BellSouth's General Subscriber Services Tariff.

5.4 Inclusion of DPI End Users in Directory Assistance Database. BellSouth will include and maintain DPI subscriber listings in BellSouth's Directory Assistance databases at no recurring charge and DPI shall provide such Directory Assistance listings to BellSouth at no recurring charge.

5.5 Listing Information Confidentiality. BellSouth will afford DPI's directory listing information the same level of confidentiality that BellSouth affords its own directory listing information.

5.6 Additional and Designer Listings. Additional and designer listings will be offered by BellSouth at tariffed rates as set forth in the General Subscriber Services Tariff.

5.7 Directories. BellSouth or its agent shall make available White Pages directories to DPI subscribers at no charge or as specified in a separate agreement with BellSouth's agent.

6. Court Ordered Requests for Call Detail Records and Other Subscriber Information

6.1 Subpoenas Directed to BellSouth. Where BellSouth provides resold services or local switching for DPI, BellSouth shall respond to subpoenas and court ordered requests delivered directly to BellSouth for the purpose of providing call detail records when the targeted telephone numbers belong to DPI End Users. Billing for such requests will be generated by BellSouth and directed to the law enforcement agency initiating the request. BellSouth shall maintain such information for DPI End Users for the same length of time it maintains such information for its own End Users.

6.2 Subpoenas Directed to DPI. Where BellSouth is providing to DPI Telecommunications Services for resale or providing to DPI the local switching function, then DPI agrees that in those cases where DPI receives subpoenas or court ordered requests regarding targeted telephone numbers belonging to DPI End Users, and where DPI does not have the requested information, DPI will advise the law enforcement agency initiating the request to redirect the subpoena or court ordered request to BellSouth for handling in accordance with 6.1 above.

6.3 In all other instances, where either Party receives a request for information involving the other Party's End User, the Party receiving the request will advise the law enforcement agency initiating the request to redirect such request to the other Party.

7. Liability and Indemnification

7.1 DPI Liability. In the event that DPI consists of two (2) or more separate entities as set forth in this Agreement and/or any Amendments hereto, all such entities shall be jointly and severally liable for the obligations of DPI under this Agreement.

7.2 Liability for Acts or Omissions of Third Parties. BellSouth shall not be liable to DPI for any act or omission of another Telecommunications company providing services to DPI.

7.3 Limitation of Liability

7.3.1 Except for any indemnification obligations of the Parties hereunder, each Party's liability to the other for any loss, cost, claim, injury, liability or expense, including reasonable attorneys' fees relating to or arising out of any negligent act or omission in its performance of this Agreement, whether in contract or in tort, shall be limited to a credit for the actual cost of the services or functions not performed or improperly performed.

7.3.2 Limitations in Tariffs. A Party may, in its sole discretion, provide in its tariffs and contracts with its End Users and third parties that relate to any service, product or function provided or contemplated under this Agreement, that to the maximum extent permitted by Applicable Law, such Party shall not be liable to the End User or third party for (i) any loss relating to or arising out of this Agreement, whether in contract, tort or otherwise, that exceeds the amount such Party would have charged that applicable person for the service, product or function that gave rise to such loss and (ii) consequential damages. To the extent that a Party elects not to place in its tariffs or contracts such limitations of liability, and the other Party incurs a loss as a result thereof, such Party shall indemnify and reimburse the other Party for that portion of the loss that would have been limited had the first Party included in its tariffs and contracts the limitations of liability that such other Party included in its own tariffs at the time of such loss.

7.3.3 Neither BellSouth nor DPI shall be liable for damages to the other Party's terminal location, equipment or End User premises resulting from the furnishing of a service, including, but not limited to, the installation and removal of equipment or associated wiring, except to the extent caused by a Party's negligence or willful misconduct or by a Party's failure to ground properly a local loop after disconnection.

7.3.4 Under no circumstance shall a Party be responsible or liable for indirect, incidental, or consequential damages, including, but not limited to, economic loss or lost business or profits, damages arising from the use or performance of equipment or software, or the loss of use of software or equipment, or accessories attached thereto, delay, error, or loss of data. In connection with this limitation of liability, each Party recognizes that the other Party may, from time to time, provide advice, make recommendations, or supply other analyses related to the services or facilities described in this Agreement, and, while each Party shall use diligent

efforts in this regard, the Parties acknowledge and agree that this limitation of liability shall apply to provision of such advice, recommendations, and analyses.

7.3.5 To the extent any specific provision of this Agreement purports to impose liability, or limitation of liability, on either Party different from or in conflict with the liability or limitation of liability set forth in this Section, then with respect to any facts or circumstances covered by such specific provisions, the liability or limitation of liability contained in such specific provision shall apply.

7.4 Indemnification for Certain Claims. The Party providing services hereunder, its Affiliates and its parent company, shall be indemnified, defended and held harmless by the Party receiving services hereunder against any claim, loss or damage arising from the receiving Party's use of the services provided under this Agreement pertaining to (1) claims for libel, slander or invasion of privacy arising from the content of the receiving Party's own communications, or (2) any claim, loss or damage claimed by the End User of the Party receiving services arising from such company's use or reliance on the providing Party's services, actions, duties, or obligations arising out of this Agreement.

7.5 Disclaimer. EXCEPT AS SPECIFICALLY PROVIDED TO THE CONTRARY IN THIS AGREEMENT, NEITHER PARTY MAKES ANY REPRESENTATIONS OR WARRANTIES TO THE OTHER PARTY CONCERNING THE SPECIFIC QUALITY OF ANY SERVICES, OR FACILITIES PROVIDED UNDER THIS AGREEMENT. THE PARTIES DISCLAIM, WITHOUT LIMITATION, ANY WARRANTY OR GUARANTEE OF MERCHANTABILITY OR FITNESS FOR A PARTICULAR PURPOSE, ARISING FROM COURSE OF PERFORMANCE, COURSE OF DEALING, OR FROM USAGES OF TRADE.

8. Intellectual Property Rights and Indemnification

8.1 No License. No patent, copyright, trademark or other proprietary right is licensed, granted or otherwise transferred by this Agreement. The Parties are strictly prohibited from any use, including but not limited to, in the selling, marketing, promoting or advertising of telecommunications services, of any name, service mark, logo or trademark (collectively, the "Marks") of the Other Party. The Marks include those Marks owned directly by a Party or its Affiliate(s) and those Marks that a Party has a legal and valid license to use. The Parties acknowledge that they are separate and distinct and that each provides a separate and distinct service and agree that neither Party may, expressly or impliedly, state, advertise or market that it is or offers the same service as the Other Party or engage in any other activity that may result in a likelihood of confusion between its own service and the service of the Other Party.

8.2 Ownership of Intellectual Property. Any intellectual property that originates from or is developed by a Party shall remain the exclusive property of that Party. Except for a limited, non-assignable, non-exclusive, non-transferable license to use

patents or copyrights to the extent necessary for the Parties to use any facilities or equipment (including software) or to receive any service solely as provided under this Agreement, no license in patent, copyright, trademark or trade secret, or other proprietary or intellectual property right, now or hereafter owned, controlled or licensable by a Party, is granted to the other Party. Neither shall it be implied nor arise by estoppel. Any trademark, copyright or other proprietary notices appearing in association with the use of any facilities or equipment (including software) shall remain on the documentation, material, product, service, equipment or software. It is the responsibility of each Party to ensure at no additional cost to the other Party that it has obtained any necessary licenses in relation to intellectual property of third Parties used in its network that may be required to enable the other Party to use any facilities or equipment (including software), to receive any service, or to perform its respective obligations under this Agreement.

8.3 Intellectual Property Remedies

8.3.1 Indemnification. The Party providing a service pursuant to this Agreement will defend the Party receiving such service or data provided as a result of such service against claims of infringement arising solely from the use by the receiving Party of such service in the manner contemplated under this Agreement and will indemnify the receiving Party for any damages awarded based solely on such claims in accordance with Section 7 preceding.

8.3.2 Claim of Infringement. In the event that use of any facilities or equipment (including software), becomes, or in the reasonable judgment of the Party who owns the affected network is likely to become, the subject of a claim, action, suit, or proceeding based on intellectual property infringement, then said Party shall promptly and at its sole expense and sole option, but subject to the limitations of liability set forth below:

8.3.2.1 modify or replace the applicable facilities or equipment (including software) while maintaining form and function, or

8.3.2.2 obtain a license sufficient to allow such use to continue.

8.3.2.3 In the event Section 8.3.2.1 or 8.3.2.2 are commercially unreasonable, then said Party may terminate, upon reasonable notice, this contract with respect to use of, or services provided through use of, the affected facilities or equipment (including software), but solely to the extent required to avoid the infringement claim.

8.3.3 Exception to Obligations. Neither Party's obligations under this Section shall apply to the extent the infringement is caused by: (i) modification of the facilities or equipment (including software) by the indemnitee; (ii) use by the indemnitee of the facilities or equipment (including software) in combination with equipment or facilities (including software) not provided or authorized by the indemnitor, provided the facilities or equipment (including software) would not be infringing if used alone; (iii) conformance to specifications of the indemnitee which would

necessarily result in infringement; or (iv) continued use by the indemnitee of the affected facilities or equipment (including software) after being placed on notice to discontinue use as set forth herein.

8.3.4 Exclusive Remedy. The foregoing shall constitute the Parties' sole and exclusive remedies and obligations with respect to a third party claim of intellectual property infringement arising out of the conduct of business under this Agreement.

8.4 Dispute Resolution. Any claim arising under this Section 8 shall be excluded from the dispute resolution procedures set forth in Section 10 and shall be brought in a court of competent jurisdiction.

9. Proprietary and Confidential Information

9.1 Proprietary and Confidential Information. It may be necessary for BellSouth and DPI, each as the "Discloser," to provide to the other Party, as "Recipient," certain proprietary and confidential information (including trade secret information) including but not limited to technical, financial, marketing, staffing and business plans and information, strategic information, proposals, request for proposals, specifications, drawings, maps, prices, costs, costing methodologies, procedures, processes, business systems, software programs, techniques, customer account data, call detail records and like information (collectively the "Information"). All such Information conveyed in writing or other tangible form shall be clearly marked with a confidential or proprietary legend. Information conveyed orally by the Discloser to Recipient shall be designated as proprietary and confidential at the time of such oral conveyance, shall be reduced to writing by the Discloser within forty-five (45) days thereafter, and shall be clearly marked with a confidential or proprietary legend.

9.2 Use and Protection of Information. Recipient agrees to protect such Information of the Discloser provided to Recipient from whatever source from distribution, disclosure or dissemination to anyone except employees of Recipient with a need to know such Information solely in conjunction with Recipient's analysis of the Information and for no other purpose except as authorized herein or as otherwise authorized in writing by the Discloser. Recipient will not make any copies of the Information inspected by it.

9.3 Exceptions. Recipient will not have an obligation to protect any portion of the Information which:

9.3.1 (a) is made publicly available by the Discloser or lawfully by a nonparty to this Agreement; (b) is lawfully obtained by Recipient from any source other than Discloser; (c) is previously known to Recipient without an obligation to keep it confidential; or (d) is released from the terms of this Agreement by Discloser upon written notice to Recipient.

9.4 Recipient agrees to use the Information solely for the purposes of negotiations pursuant to 47 U.S.C. 251 or in performing its obligations under this Agreement

and for no other entity or purpose, except as may be otherwise agreed to in writing by the Parties. Nothing herein shall prohibit Recipient from providing information requested by the FCC or a state regulatory agency with jurisdiction over this matter, or to support a request for arbitration or an allegation of failure to negotiate in good faith.

9.5 Recipient agrees not to publish or use the Information for any advertising, sales or marketing promotions, press releases, or publicity matters that refer either directly or indirectly to the Information or to the Discloser or any of its affiliated companies.

9.6 The disclosure of Information neither grants nor implies any license to the Recipient under any trademark, patent, copyright, application or other intellectual property right that is now or may hereafter be owned by the Discloser.

9.7 Survival of Confidentiality Obligations. The Parties' rights and obligations under this Section 9 shall survive and continue in effect until two (2) years after the expiration or termination date of this Agreement with regard to all Information exchanged during the term of this Agreement. Thereafter, the Parties' rights and obligations hereunder survive and continue in effect with respect to any Information that is a trade secret under applicable law.

10. Resolution of Disputes

Except as otherwise stated in this Agreement, if any dispute arises as to the interpretation of any provision of this Agreement or as to the proper implementation of this Agreement, the aggrieved Party shall petition the Commission for a resolution of the dispute. However, each Party reserves any rights it may have to seek judicial review of any ruling made by the Commission concerning this Agreement.

11. Taxes

11.1 Definition. For purposes of this Section, the terms "taxes" and "fees" shall include but not be limited to federal, state or local sales, use, excise, gross receipts or other taxes or tax-like fees of whatever nature and however designated (including tariff surcharges and any fees, charges or other payments, contractual or otherwise, for the use of public streets or rights of way, whether designated as franchise fees or otherwise) imposed, or sought to be imposed, on or with respect to the services furnished hereunder or measured by the charges or payments therefore, excluding any taxes levied on income.

11.2 Taxes and Fees Imposed Directly On Either Providing Party or Purchasing Party.

11.2.1 Taxes and fees imposed on the providing Party, which are not permitted or required to be passed on by the providing Party to its customer, shall be borne and paid by the providing Party.

11.2.2 Taxes and fees imposed on the purchasing Party, which are not required to be collected and/or remitted by the providing Party, shall be borne and paid by the purchasing Party.

11.3 Taxes and Fees Imposed on Purchasing Party But Collected And Remitted By Providing Party.

11.3.1 Taxes and fees imposed on the purchasing Party shall be borne by the purchasing Party, even if the obligation to collect and/or remit such taxes or fees is placed on the providing Party.

11.3.2 To the extent permitted by applicable law, any such taxes and/or fees shall be shown as separate items on applicable billing documents between the Parties. Notwithstanding the foregoing, the purchasing Party shall remain liable for any such taxes and fees regardless of whether they are actually billed by the providing Party at the time that the respective service is billed.

11.3.3 If the purchasing Party determines that in its opinion any such taxes or fees are not payable, the providing Party shall not bill such taxes or fees to the purchasing Party if the purchasing Party provides written certification, reasonably satisfactory to the providing Party, stating that it is exempt or otherwise not subject to the tax or fee, setting forth the basis therefor, and satisfying any other requirements under applicable law. If any authority seeks to collect any such tax or fee that the purchasing Party has determined and certified not to be payable, or any such tax or fee that was not billed by the providing Party, the purchasing Party may contest the same in good faith, at its own expense. In any such contest, the purchasing Party shall promptly furnish the providing Party with copies of all filings in any proceeding, protest, or legal challenge, all rulings issued in connection therewith, and all correspondence between the purchasing Party and the taxing authority.

11.3.4 In the event that all or any portion of an amount sought to be collected must be paid in order to contest the imposition of any such tax or fee, or to avoid the existence of a lien on the assets of the providing Party during the pendency of such contest, the purchasing Party shall be responsible for such payment and shall be entitled to the benefit of any refund or recovery.

11.3.5 If it is ultimately determined that any additional amount of such a tax or fee is due to the imposing authority, the purchasing Party shall pay such additional amount, including any interest and penalties thereon.

11.3.6 Notwithstanding any provision to the contrary, the purchasing Party shall protect, indemnify and hold harmless (and defend at the purchasing Party's expense) the providing Party from and against any such tax or fee, interest or penalties thereon, or other charges or payable expenses (including reasonable attorney fees) with

respect thereto, which are incurred by the providing Party in connection with any claim for or contest of any such tax or fee.

11.3.7 Each Party shall notify the other Party in writing of any assessment, proposed assessment or other claim for any additional amount of such a tax or fee by a taxing authority; such notice to be provided, if possible, at least ten (10) days prior to the date by which a response, protest or other appeal must be filed, but in no event later than thirty (30) days after receipt of such assessment, proposed assessment or claim.

11.4 Taxes and Fees Imposed on Providing Party But Passed On To Purchasing Party.

11.4.1 Taxes and fees imposed on the providing Party, which are permitted or required to be passed on by the providing Party to its customer, shall be borne by the purchasing Party.

11.4.2 To the extent permitted by applicable law, any such taxes and/or fees shall be shown as separate items on applicable billing documents between the Parties. Notwithstanding the foregoing, the purchasing Party shall remain liable for any such taxes and fees regardless of whether they are actually billed by the providing Party at the time that the respective service is billed.

11.4.3 If the purchasing Party disagrees with the providing Party's determination as to the application or basis for any such tax or fee, the Parties shall consult with respect to the imposition and billing of such tax or fee. Notwithstanding the foregoing, the providing Party shall retain ultimate responsibility for determining whether and to what extent any such taxes or fees are applicable, and the purchasing Party shall abide by such determination and pay such taxes or fees to the providing Party. The providing Party shall further retain ultimate responsibility for determining whether and how to contest the imposition of such taxes and fees; provided, however, that any such contest undertaken at the request of the purchasing Party shall be at the purchasing Party's expense.

11.4.4 In the event that all or any portion of an amount sought to be collected must be paid in order to contest the imposition of any such tax or fee, or to avoid the existence of a lien on the assets of the providing Party during the pendency of such contest, the purchasing Party shall be responsible for such payment and shall be entitled to the benefit of any refund or recovery.

11.4.5 If it is ultimately determined that any additional amount of such a tax or fee is due to the imposing authority, the purchasing Party shall pay such additional amount, including any interest and penalties thereon.

11.4.6 Notwithstanding any provision to the contrary, the purchasing Party shall protect, indemnify and hold harmless (and defend at the purchasing Party's expense) the providing Party from and against any such tax or fee, interest or penalties thereon, or other reasonable charges or payable expenses (including reasonable attorneys'

fees) with respect thereto, which are incurred by the providing Party in connection with any claim for or contest of any such tax or fee.

11.4.7 Each Party shall notify the other Party in writing of any assessment, proposed assessment or other claim for any additional amount of such a tax or fee by a taxing authority; such notice to be provided, if possible, at least ten (10) days prior to the date by which a response, protest or other appeal must be filed, but in no event later than thirty (30) days after receipt of such assessment, proposed assessment or claim.

11.5 Mutual Cooperation. In any contest of a tax or fee by one Party, the other Party shall cooperate fully by providing records, testimony and such additional information or assistance as may reasonably be necessary to pursue the contest. Further, the other Party shall be reimbursed for any reasonable and necessary out-of-pocket copying and travel expenses incurred in assisting in such contest.

12. Force Majeure

In the event performance of this Agreement, or any obligation hereunder, is either directly or indirectly prevented, restricted, or interfered with by reason of fire, flood, earthquake or like acts of God, wars, revolution, civil commotion, explosion, acts of public enemy, embargo, acts of the government in its sovereign capacity, labor difficulties, including without limitation, strikes, slowdowns, picketing, or boycotts, unavailability of equipment from vendor, changes requested by DPI, or any other circumstances beyond the reasonable control and without the fault or negligence of the Party affected, the Party affected, upon giving prompt notice to the other Party, shall be excused from such performance on a day-to-day basis to the extent of such prevention, restriction, or interference (and the other Party shall likewise be excused from performance of its obligations on a day-to-day basis until the delay, restriction or interference has ceased); provided, however, that the Party so affected shall use diligent efforts to avoid or remove such causes of non-performance and both Parties shall proceed whenever such causes are removed or cease.

13. Adoption of Agreements

BellSouth shall make available, pursuant to 47 USC § 252 and the FCC rules and regulations regarding such availability, to DPI any interconnection, service, or network element provided under any other agreement filed and approved pursuant to 47 USC § 252, provided a minimum of six months remains on the term of such agreement. The Parties shall adopt all rates, terms and conditions concerning such other interconnection, service or network element and any other rates, terms and conditions that are legitimately related to or were negotiated in exchange for or in conjunction with the interconnection, service or network element being adopted. The adopted interconnection, service, or network element and agreement shall apply to the same states as such other agreement. The term of the adopted agreement or provisions shall expire on the same date as set forth in the agreement that was adopted.

14. Modification of Agreement

14.1 If DPI changes its name or makes changes to its company structure or identity due to a merger, acquisition, transfer or any other reason, it is the responsibility of DPI to notify BellSouth of said change and request that an amendment to this Agreement, if necessary, be executed to reflect said change.

14.2 No modification, amendment, supplement to, or waiver of the Agreement or any of its provisions shall be effective and binding upon the Parties unless it is made in writing and duly signed by the Parties.

14.3 In the event that any effective legislative, regulatory, judicial or other legal action materially affects any material terms of this Agreement, or the ability of DPI or BellSouth to perform any material terms of this Agreement, DPI or BellSouth may, on thirty (30) days' written notice, require that such terms be renegotiated, and the Parties shall renegotiate in good faith such mutually acceptable new terms as may be required. In the event that such new terms are not renegotiated within ninety (90) days after such notice, the Dispute shall be referred to the Dispute Resolution procedure set forth in this Agreement.

15. Non-waiver of Legal Rights

Execution of this Agreement by either Party does not confirm or imply that the executing Party agrees with any decision(s) issued pursuant to the Telecommunications Act of 1996 and the consequences of those decisions on specific language in this Agreement. Neither Party waives its rights to appeal or otherwise challenge any such decision(s) and each Party reserves all of its rights to pursue any and all legal and/or equitable remedies, including appeals of any such decision(s).

16. Indivisibility

The Parties intend that this Agreement be indivisible and nonseverable, and each of the Parties acknowledges that it has assented to all of the covenants and promises in this Agreement as a single whole and that all of such covenants and promises, taken as a whole, constitute the essence of the contract. Without limiting the generality of the foregoing, each of the Parties acknowledges that any provision by BellSouth of collocation space under this Agreement is solely for the purpose of facilitating the provision of other services under this Agreement and that neither Party would have contracted with respect to the provisioning of collocation space under this Agreement if the covenants and promises of the other Party with respect to the other services provided under this Agreement had not been made. The Parties further acknowledge that this Agreement is intended to constitute a single transaction, that the obligations of the Parties under this Agreement are interdependent, and that payment obligations under this Agreement are intended to be recouped against other payment obligations under this Agreement.

17. Waivers

A failure or delay of either Party to enforce any of the provisions hereof, to exercise any option which is herein provided, or to require performance of any of the provisions hereof shall in no way be construed to be a waiver of such provisions or options, and each Party, notwithstanding such failure, shall have the right thereafter to insist upon the performance of any and all of the provisions of this Agreement.

18. Governing Law

Where applicable, this Agreement shall be governed by and construed in accordance with federal and state substantive telecommunications law, including rules and regulations of the FCC and appropriate Commission. In all other respects, this Agreement shall be governed by and construed and enforced in accordance with the laws of the State of Georgia without regard to its conflict of laws principles.

19. Assignments

Any assignment by either Party to any non-affiliated entity of any right, obligation or duty, or of any other interest hereunder, in whole or in part, without the prior written consent of the other Party shall be void. A Party may assign this Agreement in its entirety to an Affiliate of the Party without the consent of the other Party; provided, however, that the assigning Party shall notify the other Party in writing of such assignment thirty (30) days prior to the Effective Date thereof and, provided further, if the assignee is an assignee of DPI, the assignee must provide evidence of Commission CLEC certification. The Parties shall amend this Agreement to reflect such assignments and shall work cooperatively to implement any changes required due to such assignment. All obligations and duties of any Party under this Agreement shall be binding on all successors in interest and assigns of such Party. No assignment or delegation hereof shall relieve the assignor of its obligations under this Agreement in the event that the assignee fails to perform such obligations. Notwithstanding anything to the contrary in this Section, DPI shall not assign this Agreement to any Affiliate or non-affiliated entity unless either (1) DPI pays all bills, past due and current, under this Agreement, or (2) DPI's assignee expressly assumes liability for payment of such bills.

20. Notices

20.1 Every notice, consent, approval, or other communications required or contemplated by this Agreement shall be in writing and shall be delivered by hand, by overnight courier or by US mail postage prepaid, address to:

BellSouth Telecommunications, Inc.

BellSouth Local Contract Manager
600 North 19th Street, 8th floor
Birmingham, Alabama 35203

and

ICS Attorney
Suite 4300
675 W. Peachtree St.
Atlanta, GA 30375

DPI-Teleconnect, LLC

David B. Dorwart
President/CEO
2997 LBJ Freeway, Suite 225
Dallas, Texas 75234

Telephone: (972) 488-4500 Ext 4001

or at such other address as the intended recipient previously shall have designated by written notice to the other Party.

20.2 Unless otherwise provided in this Agreement, notice by mail shall be effective on the date it is officially recorded as delivered by return receipt or equivalent, and in the absence of such record of delivery, it shall be presumed to have been delivered the fifth day, or next business day after the fifth day, after it was deposited in the mails.

20.3 Notwithstanding the foregoing, BellSouth may provide DPI notice via Internet posting of price changes and changes to the terms and conditions of services available for resale per Commission Orders. BellSouth will post changes to business processes and policies, notices of new service offerings, and changes to service offerings not requiring an amendment to this Agreement, notices required to be posted to BellSouth's website, and any other information of general applicability to CLECs.

21. Rule of Construction

No rule of construction requiring interpretation against the drafting Party hereof shall apply in the interpretation of this Agreement.

22. Headings of No Force or Effect

The headings of Articles and Sections of this Agreement are for convenience of reference only, and shall in no way define, modify or restrict the meaning or interpretation of the terms or provisions of this Agreement.

23. Multiple Counterparts

This Agreement may be executed in multiple counterparts, each of which shall be deemed an original, but all of which shall together constitute but one and the same document.

24. Filing of Agreement

Upon execution of this Agreement it shall be filed with the appropriate state regulatory agency pursuant to the requirements of Section 252 of the Act, and the Parties shall share equally any filing fees therefor. If the regulatory agency imposes any filing or public interest notice fees regarding the filing or approval of the Agreement, DPI shall be responsible for publishing the required notice and the publication and/or notice costs shall be borne by DPI. Notwithstanding the foregoing, this Agreement shall not be submitted for approval by the appropriate state regulatory agency unless and until such time as DPI is duly certified as a local exchange carrier in such state, except as otherwise required by a Commission.

25. Compliance with Applicable Law

Each Party shall comply at its own expense with Applicable Law.

26. Necessary Approvals

Each Party shall be responsible for obtaining and keeping in effect all approvals from, and rights granted by, governmental authorities, building and property owners, other carriers, and any other persons that may be required in connection with the performance of its obligations under this Agreement. Each Party shall reasonably cooperate with the other Party in obtaining and maintaining any required approvals and rights for which such Party is responsible.

27. Good Faith Performance

Each Party shall act in good faith in its performance under this Agreement and, in each case in which a Party's consent or agreement is required or requested hereunder, such Party shall not unreasonably withhold or delay such consent or agreement.

28. Nonexclusive Dealings

This Agreement does not prevent either Party from providing or purchasing services to or from any other person nor, except as provided in Section 252(i) of the Act, does it obligate either Party to provide or purchase any services (except insofar as the Parties are obligated to provide access to Interconnection, services and Network Elements to DPI as a requesting carrier under the Act).

29. Rate True-Up

29.1 This section applies to Network Interconnection and/or Unbundled Network Elements and Other Services rates that are expressly subject to true-up under this Agreement**.**

29.2 The designated true-up rates shall be trued-up, either up or down, based on final prices determined either by further agreement between the Parties, or by a final order (including any appeals) of the Commission. The Parties shall implement the true-up by comparing the actual volumes and demand for each item, together with the designated true-up rates for each item, with the final prices determined for each item. Each Party shall keep its own records upon which the true-up can be based, and any final payment from one Party to the other shall be in an amount agreed upon by the Parties based on such records. In the event of any disagreement as between the records or the Parties regarding the amount of such true-up, the Parties shall submit the matter to the Dispute Resolution process in accordance with the provisions of Section 10 of the General Terms and Conditions of this Agreement.

29.3 An effective order of the Commission that forms the basis of a true-up shall be based upon cost studies submitted by either or both Parties to the Commission and shall be binding upon BellSouth and DPI specifically or upon all carriers generally, such as a generic cost proceeding.

30. Survival

The Parties' obligations under this Agreement which by their nature are intended to continue beyond the termination or expiration of this Agreement shall survive the termination or expiration of this Agreement.

31. Entire Agreement

31.1 This Agreement means the General Terms and Conditions, the Attachments identified in Section 31.2 below, and all documents identified therein, as such may be amended from time to time and which are incorporated herein by reference, all of which, when taken together, are intended to constitute one indivisible agreement. This Agreement sets forth the entire understanding and supersedes prior agreements between the Parties relating to the subject matter contained in this Agreement and merges all prior discussions between them. Any orders placed under prior agreements between the Parties shall be governed by the terms of this Agreement and DPI acknowledges and agrees that any and all amounts and obligations owed for services provisioned or orders placed under prior agreements between the Parties, related to the subject matter hereof, shall be due and owing under this Agreement and be governed by the terms and conditions of this Agreement as if such services or orders were provisioned or placed under this Agreement. Neither Party shall be bound by any definition, condition, provision, representation, warranty, covenant or promise other than as expressly stated in this Agreement or as is contemporaneously or subsequently set forth in writing and

executed by a duly authorized officer or representative of the Party to be bound thereby.

31.2 This Agreement includes Attachments with provisions for the following:

Resale
Network Elements and Other Services
Network Interconnection
Collocation
Access to Numbers and Number Portability
Pre-Ordering, Ordering, Provisioning, Maintenance and Repair
Billing
Rights-of-Way, Conduits and Pole Attachments
Performance Measurements
BellSouth Disaster Recovery Plan
Bona Fide Request/New Business Request Process

31.3 The following services are included as options for purchase by DPI pursuant to the terms and conditions set forth in this Agreement. DPI may elect to purchase said services by written request to its Local Contract Manager if applicable:

Optional Daily Usage File (ODUF)
Enhanced Optional Daily Usage File (EODUF)
Access Daily Usage File (ADUF)
Line Information Database (LIDB) Storage
Centralized Message Distribution Service (CMDS)
Calling Name (CNAM)
LNP Data Base Query Service

IN WITNESS WHEREOF, the Parties have executed this Agreement the day and year written below.

BellSouth Telecommunications, Inc.	**DPI-Teleconnect, LLC**
By: Original Signature on File	By: Original Signature on File
Name: Elizabeth R.A. Shiroishi	Name: David B. Dorwart
Title: Director	Title: President and CEO
Date: 3/20/2003	Date: 3/11/2003

Attachment 1

Resale

Table of Contents

1. Discount Rates 3

2. Definition of Terms 3

3. General Provisions 3

4. BellSouth's Provision of Services to DPI 8

5. Maintenance of Services 9

6. Establishment of Service 9

7. Discontinuance of Service 10

8. Operator Services (Operator Call Processing and Directory Assistance) 11

9. Line Information Database (LIDB) 15

10. RAO Hosting 15

11. Optional Daily Usage File (ODUF) 15

12. Enhanced Optional Daily Usage File (EODUF) 15

Resale Restrictions **Exhibit A**

Line Information Database (LIDB) Storage Agreemt **Exhibit B**

Optional Daily Usage File (ODUF) **Exhibit C**

Enhanced Option Daily Usage File (EODUF) **Exhibit D**

Resale Discounts and Rates **Exhibit E**

RESALE

1. Discount Rates

1.1 The discount rates applied to DPI purchases of BellSouth Telecommunications Services for the purpose of resale shall be as set forth in Exhibit E. Such discounts have been determined by the applicable Commission to reflect the costs avoided by BellSouth when selling a service for wholesale purposes.

1.2 The telecommunications services available for purchase by DPI for the purposes of resale to DPI's End Users shall be available at BellSouth's tariffed rates less the discount set forth in Exhibit E to this Agreement and subject to the exclusions and limitations set forth in Exhibit A to this Agreement.

2. Definition of Terms

2.1 COMPETITIVE LOCAL EXCHANGE COMPANY (CLEC) means a telephone company certificated by the Commission to provide local exchange service within BellSouth's franchised area.

2.2 CUSTOMER OF RECORD means the entity responsible for placing application for service; requesting additions, rearrangements, maintenance or discontinuance of service; payment in full of charges incurred such as non-recurring, monthly recurring, toll, directory assistance, etc.

2.3 DEPOSIT means assurance provided by a customer in the form of cash, surety bond or bank letter of credit to be held by BellSouth.

2.4 END USER means the ultimate user of the Telecommunications Service.

2.5 END USER CUSTOMER LOCATION means the physical location of the premises where an End User makes use of the telecommunications services.

2.6 NEW SERVICES means functions, features or capabilities that are not currently offered by BellSouth. This includes packaging of existing services or combining a new function, feature or capability with an existing service.

2.7 RESALE means an activity wherein a certificated CLEC, such as DPI, subscribes to the telecommunications services of BellSouth and then offers those telecommunications services to the public.

3. General Provisions

3.1 All of the negotiated rates, terms and conditions set forth in this Attachment pertain to the resale of BellSouth's retail telecommunications services and other services specified in this Attachment. Subject to effective and applicable FCC and

Commission rules and orders, BellSouth shall make available to DPI for resale those telecommunications services BellSouth makes available, pursuant to its General Subscriber Services Tariff and Private Line Services Tariff, to customers who are not telecommunications carriers.

3.1.1 When DPI provides Resale service in a cross boundary area (areas that are part of the local serving area of another state's exchange) the rates, regulations and discounts for the tariffing state will apply. Billing will be from the serving state.

3.1.2 In Tennessee, if DPI does not resell Lifeline service to any end users, and if DPI agrees to order an appropriate Operator Services/Directory Assistance block as set forth in BellSouth's General Subscriber Services Tariff, the discount shall be 21.56%.

3.1.2.1 In the event DPI resells Lifeline service to any end user in Tennessee, BellSouth will begin applying the 16% discount rate to all services. Upon DPI and BellSouth's implementation of a billing arrangement whereby a separate Master Account (Q-account) associated with a separate Operating Customer Number (OCN) is established for billing of Lifeline service end users, the discount shall be applied as set forth in 3.1.2 preceding for the non-Lifeline affected Master Account (Q-account).

3.1.2.2 DPI must provide written notification to BellSouth within 30 days prior to either providing its own operator services/ directory services or orders the appropriate operator services/directory assistance blocking, to qualify for the higher discount rate of 21.56%.

3.2 DPI may purchase resale services from BellSouth for its own use in operating its business. The resale discount will apply to those services under the following conditions:

3.2.1 DPI must resell services to other End Users.

3.2.2 DPI cannot be a competitive local exchange telecommunications company for the single purpose of selling to itself.

3.3 DPI will be the customer of record for all services purchased from BellSouth. Except as specified herein, BellSouth will take orders from, bill and receive payment from DPI for said services.

3.4 DPI will be BellSouth's single point of contact for all services purchased pursuant to this Agreement. BellSouth shall have no contact with the End User except to the extent provided for herein. Each Party shall provide to the other a nation wide (50 states) toll-free contact number for purposes of repair and maintenance.

3.5 BellSouth will continue to bill the End User for any services that the End User specifies it wishes to receive directly from BellSouth. BellSouth maintains the right

to serve directly any End User within the service area of DPI. BellSouth will continue to market directly its own telecommunications products and services and in doing so may establish independent relationships with End Users of DPI. Neither Party shall interfere with the right of any person or entity to obtain service directly from the other Party.

3.5.1 When an End User of DPI or BellSouth elects to change his/her carrier to the other Party, both Parties agree to release the End User's service to the other Party concurrent with the due date of the service order, which shall be established based on the standard interval for the End User's requested service as set forth in the BellSouth Product and Services Interval Guide.

3.5.2 BellSouth and DPI will refrain from contacting an End User who has placed or whose selected carrier has placed on the End User's behalf an order to change the End User's service provider from BellSouth or DPI to the other Party until such time that the order for service has been completed.

3.6 Current telephone numbers may normally be retained by the End User and are assigned to the service furnished. However, neither Party nor the End User has a property right to the telephone number or any other call number designation associated with services furnished by BellSouth, and no right to the continuance of service through any particular central office. BellSouth reserves the right to change such numbers, or the central office designation associated with such numbers, or both, whenever BellSouth deems it necessary to do so in the conduct of its business and in accordance with BellSouth practices and procedures on a nondiscriminatory basis.

3.7 Where BellSouth provides resold services to DPI, BellSouth will provide DPI with on-line access to intermediate telephone numbers as defined by applicable FCC rules and regulations on a first come first served basis. DPI acknowledges that such access to numbers shall be in accordance with the appropriate FCC rules and regulations. DPI acknowledges that there may be instances where there is a shortage of telephone numbers in a particular Common Language Location Identifier Code (CLLIC); and in such instances, DPI shall return unused intermediate telephone numbers to BellSouth upon BellSouth's request. BellSouth shall make all such requests on a nondiscriminatory basis.

3.8 BellSouth will allow DPI to designate up to 100 intermediate telephone numbers per CLLIC, for DPI's sole use. Assignment, reservation and use of telephone numbers shall be governed by applicable FCC rules and regulations. DPI acknowledges that there may be instances where there is a shortage of telephone numbers in a particular CLLIC and BellSouth has the right to limit access to blocks of intermediate telephone numbers. These instances include: 1) where jeopardy status has been declared by the North American Numbering Plan (NANP) for a particular Numbering Plan Area (NPA); or 2) where a rate center has less than six months supply of numbering resources.

3.9 Service is furnished subject to the condition that it will not be used for any unlawful purpose.

3.10 Service will be discontinued if any law enforcement agency advises that the service being used is in violation of the law.

3.11 BellSouth can refuse service when it has grounds to believe that service will be used in violation of the law.

3.12 BellSouth will cooperate with law enforcement agencies with subpoenas and court orders relating to DPI's End Users, pursuant to Section 6 of the General Terms and Conditions.

3.13 If DPI or its End Users utilize a BellSouth resold telecommunications service in a manner other than that for which the service was originally intended as described in BellSouth's retail tariffs, DPI has the responsibility to notify BellSouth. BellSouth will only provision and maintain said service consistent with the terms and conditions of the tariff describing said service.

3.14 Facilities and/or equipment utilized by BellSouth to provide service to DPI remain the property of BellSouth.

3.15 White page directory listings for DPI End Users will be provided in accordance with Section 5 of the General Terms and Conditions.

3.16 Service Ordering and Operational Support Systems (OSS)

3.16.1 DPI must order services through resale interfaces, i.e., the Local Carrier Service Center (LCSC) and/or appropriate Complex Resale Support Group (CRSG) pursuant to this Agreement. BellSouth has developed and made available the interactive interfaces by which DPI may submit a Local Service Request (LSR) electronically as set forth in Attachment 2 of this Agreement. Service orders will be in a standard format designated by BellSouth.

3.16.2 LSRs submitted by means of one of these interactive interfaces will incur an OSS electronic charge as set forth in Exhibit E to this Agreement. An individual LSR will be identified for billing purposes by its Purchase Order Number (PON). LSRs submitted by means other than one of these interactive interfaces (Mail, fax, courier, etc.) will incur a manual order charge as set forth in Exhibit E to this Agreement. Supplements or clarifications to a previously billed LSR will not incur another OSS charge.

3.16.3 Denial/Restoral OSS Charge. In the event DPI provides a list of customers to be denied and restored, rather than an LSR, each location on the list will require a separate PON and therefore will be billed as one LSR per location.

3.16.4 Cancellation OSS Charge. DPI will incur an OSS charge for an accepted LSR that is later canceled.

3.17 Where available to BellSouth's End Users, BellSouth shall provide the following telecommunications services at a discount to allow for voice mail services**:**

- Message Waiting Indicator ("MWI"), stutter dialtone and message waiting light feature capabilities
- Call Forward Busy Line ("CF/B")
- Call Forward Don't Answer ("CF/DA")

Further, BellSouth messaging services set forth in BellSouth's Messaging Service Information Package shall be made available for resale without the wholesale discount.

3.18 BellSouth shall provide branding for, or shall unbrand, voice mail services for DPI per the Bona Fide Request/New Business Request process as set forth in Attachment 6 of this Agreement.

3.19 BellSouth's Inside Wire Maintenance Service Plan is available for resale at rates, terms and conditions as set forth by BellSouth and without the wholesale discount.

3.20 In the event DPI acquires an end user whose service is provided pursuant to a BellSouth Special Assembly, BellSouth shall make available to DPI that Special Assembly at the wholesale discount at DPI's option. DPI shall be responsible for all terms and conditions of such Special Assembly including but not limited to termination liability if applicable.

3.21 BellSouth shall provide 911/E911 for DPI customers in the same manner that it is provided to BellSouth customers. BellSouth shall provide and validate DPI customer information to the PSAP. BellSouth shall use its service order process to update and maintain, on the same schedule that it uses for its customers, the DPI customer service information in the ALI/DMS (Automatic Location Identification/Location Information) databases used to support 911/E911 services.

3.22 BellSouth shall bill, and DPI shall pay, the End User line charge associated with implementing Number Portability as set forth in BellSouth's FCC No. 1 tariff. This charge is not subject to the wholesale discount.

3.23 Pursuant to 47 CFR Section 51.617, BellSouth shall bill to DPI, and DPI shall pay, the End User common line charges identical to the End User common line charges BellSouth bills its End Users.

4. BellSouth's Provision of Services to DPI

4.1 Resale of BellSouth services shall be as follows:

4.1.1 The resale of telecommunications services shall be limited to users and uses conforming to the class of service restrictions.

4.1.2 Hotel and Hospital PBX services are the only telecommunications services available for resale to Hotel/Motel and Hospital End Users, respectively. Similarly, Access Line Service for Customer Provided Coin Telephones is the only local service available for resale to Payphone Service Provider (PSP) customers. Shared Tenant Service customers can only be sold those local exchange access services available in BellSouth's A23 Shared Tenant Service Tariff in the states of Florida, Georgia, North Carolina and South Carolina, and in A27 in the states of Alabama, Kentucky, Louisiana, Mississippi and Tennessee.

4.1.3 BellSouth reserves the right to periodically audit services purchased by DPI to establish authenticity of use. Such audit shall not occur more than once in a calendar year. DPI shall make any and all records and data available to BellSouth or BellSouth's auditors on a reasonable basis. BellSouth shall bear the cost of said audit. Any information provided by DPI for purposes of such audit shall be deemed Confidential Information pursuant to the General Terms and Conditions of this Agreement.

4.2 Subject to Exhibit A hereto, resold services can only be used in the same manner as specified in BellSouth's Tariffs. Resold services are subject to the same terms and conditions as are specified for such services when furnished to an individual End User of BellSouth in the appropriate section of BellSouth's Tariffs. Specific tariff features (e.g. a usage allowance per month) shall not be aggregated across multiple resold services.

4.3 DPI may resell services only within the specific service area as defined in its certificate of operation approved by the Commission.

4.4 If DPI cancels an order for resold services, any costs incurred by BellSouth in conjunction with provisioning of such order will be recovered in accordance with BellSouth's General Subscriber Services Tariffs and Private Line Services Tariffs.

4.5 <u>Service Jointly Provisioned with an Independent Company or Competitive Local Exchange Company Areas</u>

4.5.1 BellSouth will in some instances provision resold services in accordance with the General Subscriber Services Tariff and Private Line Tariffs jointly with an Independent Company or other Competitive Local Exchange Carrier.

4.5.2 When DPI assumes responsibility for such service, all terms and conditions defined in the Tariff will apply for services provided within the BellSouth service area only.

4.5.3 Service terminating in an Independent Company or other Competitive Local Exchange Carrier area will be provisioned and billed by the Independent Company or other Competitive Local Exchange Carrier directly to DPI.

4.5.4 DPI must establish a billing arrangement with the Independent Company or other Competitive Local Exchange Carrier prior to assuming an end user account where such circumstances apply.

4.5.5 Specific guidelines regarding such services are available on BellSouth's website @ www.interconnection.bellsouth.com.

5. Maintenance of Services

5.1 Services resold pursuant to this Attachment and BellSouth's General Subscriber Service Tariff and Private Line Service Tariff and facilities and equipment provided by BellSouth shall be maintained by BellSouth.

5.2 DPI or its End Users may not rearrange, move, disconnect, remove or attempt to repair any facilities owned by BellSouth except with the written consent of BellSouth.

5.3 DPI accepts responsibility to notify BellSouth of situations that arise that may result in a service problem.

5.4 DPI will contact the appropriate repair centers in accordance with procedures established by BellSouth.

5.5 For all repair requests, DPI shall adhere to BellSouth's prescreening guidelines prior to referring the trouble to BellSouth.

5.6 BellSouth will bill DPI for handling troubles that are found not to be in BellSouth's network pursuant to its standard time and material charges. The standard time and material charges will be no more than what BellSouth charges to its retail customers for the same services.

5.7 BellSouth reserves the right to contact DPI's End Users, if deemed necessary, for maintenance purposes.

6. Establishment of Service

6.1 After receiving certification as a local exchange carrier from the applicable regulatory agency, DPI will provide the appropriate BellSouth Advisory team manager the necessary documentation to enable BellSouth to establish accounts for resold services ("master account"). DPI is required to provide the following before a master account is established: blanket letter of authorization, misdirected number form, proof of PSC/PUC certification, the Application for Master Account, an Operating Company Number ("OCN") assigned by the National

Exchange Carriers Association ("NECA") and a deposit and tax exemption certificate, if applicable.

6.1.1 If DPI needs to change its OCN(s) under which it operates when DPI has already bee conducting business utilizing those OCN(s), DPI shall bear all costs incurred by BellSouth to convert DPI DPI to the new OCN(s). OCN conversion charges include all time required to make system updates to all of DPI's end user customer records. Appropriate charges will appear in the OC&C section of DPI's bill.

6.2 DPI shall provide to BellSouth a blanket letter of authorization ("LOA") certifying that DPI will have End User authorization prior to viewing the End User's customer service record or switching the End User's service. BellSouth will not require End User confirmation prior to establishing service for DPI's End User customer.

6.3 BellSouth will accept a request directly from the End User for conversion of the End User's service from DPI to BellSouth or will accept a request from another CLEC for conversion of the End User's service from DPI to such other CLEC. Upon completion of the conversion BellSouth will notify DPI that such conversion has been completed.

7. Discontinuance of Service

7.1 The procedures for discontinuing service to an End User are as follows:

7.1.1 BellSouth will deny service to DPI's End User on behalf of, and at the request of, DPI. Upon restoration of the End User's service, restoral charges will apply and will be the responsibility of DPI.

7.1.2 At the request of DPI, BellSouth will disconnect a DPI End User customer.

7.1.3 All requests by DPI for denial or disconnection of an End User for nonpayment must be in writing.

7.1.4 DPI will be made solely responsible for notifying the End User of the proposed disconnection of the service.

7.1.5 BellSouth will continue to process calls made to the Annoyance Call Center and will advise DPI when it is determined that annoyance calls are originated from one of its End User's locations. BellSouth shall be indemnified, defended and held harmless by DPI and/or the End User against any claim, loss or damage arising from providing this information to DPI. It is the responsibility of DPI to take the corrective action necessary with its End Users who make annoying calls. (Failure to do so will result in BellSouth's disconnecting the End User's service.)

8. Operator Services (Operator Call Processing and Directory Assistance)

8.1 Operator Call Processing provides: (1) operator handling for call completion (for example, collect, third number billing, and manual calling-card calls). (2) operator or automated assistance for billing after the end user has dialed the called number (for example, calling card calls); and (3) special services including but not limited to Busy Line Verification and Emergency Line Interrupt (ELI), Emergency Agency Call and Operator-assisted Directory Assistance.

8.1 Upon request for BellSouth Operator Call Processing, BellSouth shall:

8.1.1 . Process 0+ and 0- dialed local calls

8.1.3 .2 Process 0+ and 0- intraLATA toll calls.

8.1.4 Process calls that are billed to DPI end user's calling card that can be validated by BellSouth.

8.1.5 Process person-to-person calls.

8.1.6 Process collect calls.

8.1.7 Provide the capability for callers to bill a third party and shall also process such calls.

8.1.8 Process station-to-station calls.

8.1.9 Process Busy Line Verify and Emergency Line Interrupt requests.

8.1.10 Process emergency call trace originated by Public Safety Answering Points.

8.1.11 Process operator-assisted directory assistance calls.

8.1.12 Adhere to equal access requirements, providing DPI local end users the same IXC access that BellSouth provides its own operator service.

8.1.13 Exercise at least the same level of fraud control in providing Operator Service to DPI that BellSouth provides for its own operator service.

8.1.14 Perform Billed Number Screening when handling Collect, Person-to-Person, and Billed-To-Third-Party calls.

8.1.15 Direct customer account and other similar inquiries to the customer service center designated by DPI.

8.1.16 Provide call records to DPI in accordance with ODUF standards.

8.1.17 The interface requirements shall conform to the interface specifications for the platform used to provide Operator Services as long as the interface conforms to industry standards.

8.2 Directory Assistance Service

8.2.1 Directory Assistance Service provides local and non-local end user telephone number listings with the option to complete the call at the caller's direction separate and distinct from local switching.

8.2.2 Directory Assistance Service shall provide up to two listing requests per call, if available and if requested by DPI's end user. BellSouth shall provide caller-optional directory assistance call completion service at rates set forth in BellSouth's General Subscriber Services Tariff to one of the provided listings.

8.3.1 Directory Assistance Service Updates

8.3.1 BellSouth shall update end user listings changes daily. These changes include:

8.3.2 New end user connections

8.3.3 End user disconnections

8.3.4 End user address changes

8.3.5 These updates shall also be provided for non-listed and non-published numbers for use in emergencies.

8.4 Branding for Operator Call Processing and Directory Assistance

8.4.1 BellSouth's branding feature provides a definable announcement to DPI end users using Directory Assistance (DA)/ Operator Call Processing (OCP) prior to placing such end users in queue or connecting them to an available operator or automated operator system. This feature allows DPI's name on whose behalf BellSouth is providing Directory Assistance and/or Operator Call Processing. Rates for the branding features are set forth in Exhibit E of this Attachment.

8.4.2 BellSouth offers three branding offering options to DPI when ordering BellSouth's Directory Assistance and Operator Call Processing: BellSouth Branding, Unbranding and Custom Branding.

8.4.3 Upon receipt of the branding order from DPI, the order is considered firm after ten (10) business days. Should DPI decide to cancel the order, written notification to DPI's BellSouth Account Executive is required. If DPI decides to cancel after ten (10) business days from receipt of the branding order, DPI shall pay all charges per the order.

8.4.4 Branding via Originating Line Number Screening (OLNS)

8.4.4.1 BellSouth Branding, Unbranding and Custom Branding are also available for Directory Assistance, Operator Call Processing or both via OLNS software. When utilizing this method of Unbranding or Custom Branding DPI shall not be required to purchase dedicated trunking.

8.4.4.2 BellSouth Branding is the default branding offering.

8.4.4.3 For BellSouth to provide Unbranding or Custom Branding via OLNS software for Operator Call Processing or for Directory Assistance DPI must have its Operating Company Number ("OCN(s)") and telephone numbers reside in BellSouth's LIDB; however, a BellSouth LIDB Storage Agreement is not required. To Implement Unbranding and Custom Branding via OLNS software, DPI must submit a manual order form which requires, among other things, DPI's OCN and a forecast for the traffic volume anticipated for each BellSouth TOPS during the peak busy hour. DPI shall provide updates to such forecast on a quarterly basis and at any time such forecasted traffic volumes are expected to change significantly. Upon DPI's purchase of Unbranding and Custom Branding using OLNS software for any particular TOPS, all DPI end users served by that TOPS will receive the Unbranded "no announcement" or the Custom Branded announcement.

8.4.4.4 Rates for Unbranding and Custom Branding via OLNS software for Directory Assistance and for Operator Call Processing are as set forth in Exhibit E of this Attachment. In addition to the charges for Unbranding and Custom Branding via OLNS software, DPI shall continue to pay BellSouth applicable labor and other charges for the use of BellSouth's Directory Assistance and Call Processing platforms as set forth in Exhibit E of this Attachment.

8.4.5 Selective Call Routing using Line Class Codes (SCR-LCC)

8.4.5.1 Where DPI resells BellSouth's services and utilizes an operator services provider other than BellSouth, BellSouth will route DPI's end user calls to that provider through Selective Call Routing.

8.4.5.2 Selective Call Routing using Line Class Codes (SCR-LCC) provides the capability for DPI to have its OCP/DA calls routed to BellSouth's OCP/DA platform for BellSouth provided Custom Branded or Unbranded OCP/DA or to its own or an alternate OCP/DA platform for Self-Branded OCP/DA. SCR-LCC is only available if line class code capacity is available in the requested BellSouth end office switches.

8.4.5.3 Custom Branding for Directory Assistance is not available for certain classes of service, including but not limited to Hotel/Motel services, WATS service and certain PBX services.

8.4.5.4 Where available, DPI specific and unique line class codes are programmed in each BellSouth end office switch where DPI intends to service end users with customized OCP/DA branding. The line class codes specifically identify DPI's end users so OCP/DA calls can be routed over the appropriate trunk group to the requested OCP/DA platform. Additional line class codes are required in each end office if the end office serves multiple NPAs (i.e., a unique LCC is required per NPA), and/or if the end office switch serves multiple rate areas and DPI intends to provide DPI-branded OCP/DA to its end users in these multiple rate areas.

8.4.5.5 BellSouth Branding is the default branding offering.

8.4.5.6 SCR-LCC supporting Custom Branding and Self Branding require DPI to order dedicated transport and trunking from each BellSouth end office identified by DPI, either to the BellSouth Traffic Operator Position System (TOPS) for Custom Branding or to the DPI Operator Service Provider for Self Branding. Separate trunk groups are required for Operator Services and for Directory Assistance. Rates for transport and trunks are set forth in applicable BellSouth Tariffs.

8.4.5.7 The rates for SCR-LCC are as set forth in Exhibit E of this Attachment. There is a nonrecurring charge for the establishment of each Line Class Code in each BellSouth central office.

8.4.5.8 Unbranded Directory Assistance and/or Operator Call Processing calls ride common trunk groups provisioned by BellSouth from those end offices identified by DPI to the BellSouth Tops. The calls are routed to "No Announcement."

8.4.6 Customized Branding includes charges for the recording of the branding announcement and the loading of the audio units in each TOPS Switch and Network Applications Vehicle (NAV) equipment for which DPI requires service.

8.4.6.1 Directory Assistance customized branding uses:

8.4.6.2 the recording of DPI

8.4.6.3 the loading of the recording in each switch.

8.4.6.4 Operator Call Processing customized branding uses:

8.4.6.5 the recording of DPI

8.4.6.6 2 the loading of the recording in each switch.

8.4.6.7 the loading on the Network Applications Vehicle (NAV). All NAV shelves within the region where the customer is offering service must be loaded.

9. Line Information Database (LIDB)

9.1 BellSouth will store in its Line Information Database (LIDB) records relating to service only in the BellSouth region. The LIDB Storage Agreement is included in this Attachment as Exhibit B.

9.2 BellSouth will provide LIDB Storage upon written request to DPI's Account Manager stating a requested activation date.

10. RAO Hosting

10.1 RAO Hosting is not required for resale in the BellSouth region.

11. Optional Daily Usage File (ODUF)

11.1 The Optional Daily Usage File (ODUF) Agreement with terms and conditions is included in this Attachment as Exhibit C. Rates for ODUF are as set forth in Exhibit E of this Attachment.

11.2. BellSouth will provide ODUF service upon written request to its Account Manager stating a requested activation date.

12. Enhanced Optional Daily Usage File (EODUF)

12.1 The Enhanced Optional Daily Usage File (EODUF) service Agreement with terms and conditions is included in this Attachment as Exhibit D. Rates for EODUF are as set forth in Exhibit E of this Attachment.

12.2 BellSouth will provide EODUF service upon written request to its Account Manager stating a requested activation date.

EXCLUSIONS AND LIMITATIONS ON SERVICES AVAILABLE FOR RESALE (Note 3)

	Type of Service	AL		FL		GA		KY		LA		MS		NC		SC		TN	
		Resale	Discount	Resale	Discount	Resale	Discount	Resale	Discount	Resale	Discount	Resale	Discount	Resale	Discount	Resale	Discount	Resale	Discount
1	Grandfathered Services (Note 1)	Yes	Yes	Yes	Yes	Yes	Yes	Yes	Yes	Yes	Yes	Yes	Yes	Yes	Yes	Yes	Yes	Yes	Yes
2	Promotions - > 90 Days(Note 2)	Yes	Yes	Yes	Yes	Yes	Yes	Yes	Yes	Yes	Yes	Yes	Yes	Yes	Yes	Yes	Yes	Yes	Yes
3	Promotions - ≤ 90 Days (Note 2)	Yes	No	Yes	No	Yes	No	Yes	No	Yes	No	Yes	No	Yes	No	Yes	No	Yes	No
4	Lifeline/Link Up Services	Yes	Yes	Yes	Yes	Yes	Yes	No	No	Yes	Yes	Yes	Yes	Yes	Yes	Yes	Yes	Yes	Yes
5	911/E911 Services	Yes	Yes	Yes	Yes	Yes	Yes	Yes	Yes	No	No	Yes	Yes	Yes	Yes	Yes	Yes	Yes	Yes
6	N11 Services	Yes	Yes	Yes	Yes	Yes	Yes	No	No	No	No	Yes	Yes	Yes	Yes	No	No	Yes	Yes
7	MemoryCall®Service	Yes	No	Yes	No	Yes	No	Yes	No	Yes	No	Yes	No	Yes	No	Yes	No	Yes	No
8	Mobile Services	Yes	No	Yes	No	Yes	No	Yes	No	Yes	No	Yes	No	Yes	No	Yes	No	Yes	No
9	Federal Subscriber Line Charges	Yes	No	Yes	No	Yes	No	Yes	No	Yes	No	Yes	No	Yes	No	Yes	No	Yes	No
10	Non-RecurCharges	Yes	Yes	Yes	Yes	Yes	Yes	Yes	Yes	Yes	Yes	Yes	Yes	Yes	Yes	Yes	Yes	Yes	No
11	End User Line Chg-Number Portability	Yes	No	Yes	No	Yes	No	Yes	No	Yes	No	Yes	No	Yes	No	Yes	No	Yes	No
12	Public Telephone Access Svc(PTAS)	Yes	Yes	Yes	Yes	Yes	Yes	Yes	Yes	Yes	Yes	Yes	Yes	Yes	Yes	Yes	No	Yes	Yes
13	Inside Wire Maint Service Plan	Yes	No	Yes	No	Yes	No	Yes	No	Yes	No	Yes	No	Yes	No	Yes	No	Yes	No

	Applicable Notes:
1.	**Grandfathered services** can be resold only to existing subscribers of the grandfathered service.
2.	Where available for resale, **promotions** will be made available only to End Users who would have qualified for the promotion had it been provided by BellSouth directly.
3.	Some of BellSouth's local exchange and toll telecommunications services are not available in certain central offices and areas.

LINE INFORMATION DATA BASE (LIDB)

RESALE STORAGE AGREEMENT

I. Definitions (from Addendum)

A. Billing number - a number used by BellSouth for the purpose of identifying an account liable for charges. This number may be a line or a special billing number.

B. Line number - a ten-digit number assigned by BellSouth that identifies a telephone line associated with a resold local exchange service.

C. Special billing number - a ten-digit number that identifies a billing account established by BellSouth in connection with a resold local exchange service.

D. Calling Card number - a billing number plus PIN number assigned by BellSouth.

E. PIN number - a four-digit security code assigned by BellSouth that is added to a billing number to compose a fourteen-digit calling card number.

F. Toll billing exception indicator - associated with a billing number to indicate that it is considered invalid for billing of collect calls or third number calls or both, by DPI.

G. Billed Number Screening - refers to the query service used to determine whether a toll billing exception indicator is present for a particular billing number.

H. Calling Card Validation - refers to the query service used to determine whether a particular calling card number exists as stated or otherwise provided by a caller.

I. Billing number information - information about billing number or Calling Card number as assigned by BellSouth and toll billing exception indicator provided to BellSouth by DPI.

J. Get-Data - refers to the query service used to determine, at a minimum, the Account Owner and/or Regional Accounting Office for a line number. This query service may be modified to provide additional information in the future.

K. Originating Line Number Screening ("OLNS") - refers to the query service used to determine the billing, screening and call handling indicators, station type and Account Owner provided to BellSouth by DPI for originating line numbers.

L. Account Owner - name of the local exchange telecommunications company that is providing dialtone on a subscriber line.

II. General

A. This Agreement sets forth the terms and conditions pursuant to which BellSouth agrees to store in its LIDB certain information at the request of DPI and pursuant to which BellSouth, its LIDB customers and DPI shall have access to such information. In addition, this Agreement sets forth the terms and conditions for DPI's provision of billing number information to BellSouth for inclusion in BellSouth's LIDB. DPI understands that BellSouth provides access to information in its LIDB to various telecommunications service providers pursuant to applicable tariffs and agrees that information stored at the request of DPI, pursuant to this Agreement, shall be available to those telecommunications service providers. The terms and conditions contained herein shall hereby be made a part of this Resale Agreement upon notice to DPI's account team and/or Local Contract Manager activate this LIDB Storage Agreement. The General Terms and Conditions of the Resale Agreement shall govern this LIDB Storage Agreement. The terms and conditions contained in the attached Addendum are hereby made a part of this LIDB Storage Agreement as if fully incorporated herein.

B. BellSouth will provide responses to on-line, call-by-call queries to billing number information for the following purposes:

1. Billed Number Screening

   BellSouth is authorized to use the billing number information to determine whether DPI has identified the billing number as one that should not be billed for collect or third number calls.

2. Calling Card Validation

   BellSouth is authorized to validate a 14-digit Calling Card number where the first 10 digits are a line number or special billing number assigned by BellSouth, and where the last four digits (PIN) are a security code assigned by BellSouth.

3. OLNS

   BellSouth is authorized to provide originating line screening information for billing services restrictions, station type, call handling indicators, presubscribed interLATA and local carrier and account owner on the lines of DPI from which a call originates.

4. GetData

   BellSouth is authorized to provide, at a minimum, the account owner and/or Regional Accounting Office information on the lines of DPI indicating the local

service provider and where billing records are to be sent for settlement purposes. This query service may be modified to provide additional information in the future.

5. Fraud Control

BellSouth will provide seven days per week, 24-hours per day, fraud monitoring on Calling Cards, bill-to-third and collect calls made to numbers in BellSouth's LIDB, provided that such information is included in the LIDB query. BellSouth will establish fraud alert thresholds and will notify DPI of fraud alerts so that DPI may take action it deems appropriate.

III. Responsibilities of the Parties

A. BellSouth will administer all data stored in the LIDB, including the data provided by DPI pursuant to this Agreement, in the same manner as BellSouth's data for BellSouth's End User customers. BellSouth shall not be responsible to DPI for any lost revenue which may result from BellSouth's administration of the LIDB pursuant to its established practices and procedures as they exist and as they may be changed by BellSouth in its sole discretion from time to time.

B. Billing and Collection Customers

BellSouth currently has in effect numerous billing and collection agreements with various interexchange carriers and billing clearing houses and as such these billing and collection customers ("B&C Customers") query BellSouth's LIDB to determine whether to accept various billing options from End Users. Until such time as BellSouth implements in its LIDB and its supporting systems the means to differentiate DPI's data from BellSouth's data, the following shall apply:

(1) BellSouth will identify DPI end user originated long distance charges and will return those charges to the interexchange carrer as not covered by the existing B&C agreement. DPI is responsible for entering into the appropriate agreement with interexchange carriers for handling of long distance charges by their end users.

(2) BellSouth shall have no obligation to become involved in any disputes between DPI and B&C Customers. BellSouth will not issue adjustments for charges billed on behalf of any B&C Customer to DPI. It shall be the responsibility of DPI and the B&C Customers to negotiate and arrange for any appropriate adjustments.

IV. Fees for Service and Taxes

A. DPI will not be charged a fee for storage services provided by BellSouth to DPI, as described in this LIDB Resale Storage Agreement.

B. Sales, use and all other taxes (excluding taxes on BellSouth's income) determined by BellSouth or any taxing authority to be due to any federal, state or local taxing jurisdiction with respect to the provision of the service set forth herein will be paid by

DPI in accordance with the tax provisions set forth in the General Terms and Conditions of this Agreement.

Optional Daily Usage File

1. Upon written request from DPI, BellSouth will provide the Optional Daily Usage File (ODUF) service to DPI pursuant to the terms and conditions set forth in this section.

2. DPI shall furnish all relevant information required by BellSouth for the provision of the ODUF.

3. The ODUF feed will contain billable messages that were carried over the BellSouth Network and processed in the BellSouth Billing System, but billed to a DPI customer.

4. Charges for ODUF will appear on DPI's monthly bills. The charges are as set forth in Exhibit E to this Attachment. ODUF charges are billed once a month for the previous month's usage. DPI will be billed at the ODUF rates that are in effect at the end of the previous month.

5. The ODUF feed will contain both rated and unrated messages. All messages will be in the standard Alliance for Telecommunications Industry Solutions (ATIS) EMI record format.

6. Messages that error in DPI's billing system will be the responsibility of DPI. If, however, DPI should encounter significant volumes of errored messages that prevent processing by DPI within its systems, BellSouth will work with DPI to determine the source of the errors and the appropriate resolution.

6. The following specifications shall apply to the ODUF feed.

6.1 ODUF Message to be Transmitted

6.1.1 The following messages recorded by BellSouth will be transmitted to DPI:

- Message recording for per use/per activation type services (examples: Three Way Calling, Verify, Interrupt, Call Return, etc.)
- Measured billable Local
- Directory Assistance messages
- IntraLATA Toll
- WATS and 800 Service
- N11

- Information Service Provider Messages
- Operator Services Messages
- Credit/Cancel Records
- Usage for Voice Mail Message Service

6.1.2 Rated Incollects (originated in BellSouth and from other companies) can also be on ODUF. Rated Incollects will be intermingled with BellSouth recorded rated and unrated usage. Rated Incollects will not be packed separately.

6.1.3 BellSouth will perform duplicate record checks on records processed to ODUF. Any duplicate messages detected will be deleted and not sent to DPI.

6.1.4 In the event that DPI detects a duplicate on ODUF they receive from BellSouth, DPI will drop the duplicate message and will not return the duplicate to BellSouth).

6.2 ODUF Physical File Characteristics

6.2.1 The ODUF will be distributed to DPI via CONNECT:Direct or Secure File Transfer Protocol (FTP) or another mutually agreed medium. The ODUF feed will be a variable block format. The data on the ODUF feed will be in a non-compacted EMI format (175 byte format plus modules). It will be created on a daily basis Monday through Friday except holidays. Details such as dataset name and delivery schedule will be addressed during negotiations of the distribution medium. There will be a maximum of one dataset per workday per OCN.

6.2.2 Data circuits (private line or dial-up) will be required between BellSouth and DPI for the purpose of data transmission when utilizing CONNECT:Direct. Where a dedicated line is required, DPI will be responsible for ordering the circuit, overseeing its installation and coordinating the installation with BellSouth. DPI will also be responsible for any charges associated with this line. Equipment required on the BellSouth end to attach the line to the mainframe computer and to transmit data will be negotiated on an individual case basis. Where a dial-up facility is required, dial circuits will be installed in the BellSouth data center by BellSouth and the associated charges assessed to DPI. Additionally, all message toll charges associated with the use of the dial circuit by DPI will be the responsibility of DPI. Associated equipment on the BellSouth end, including a modem, will be negotiated on an individual case basis between the Parties. All equipment, including modems and software, that is required on DPI end for the purpose of data transmission will be the responsibility of DPI.

6.2.3 If DPI utilizes Secure File Transfer Protocol (FTP) for data file transmission, purchase of the Secure File Transfer Protocol (FTP) software will be the responsibility of DPI.

6.3 ODUF Packing Specifications

6.3.1 A pack will contain a minimum of one message record or a maximum of 99,999 message records plus a pack header record and a pack trailer record. One transmission can contain a maximum of 99 packs and a minimum of one pack.

6.3.2 The OCN, From RAO, and Invoice Number will control the invoice sequencing. The From RAO will be used to identify to DPI which BellSouth RAO is sending the message. BellSouth and DPI will use the invoice sequencing to control data exchange. BellSouth will be notified of sequence failures identified by DPI and resend the data as appropriate.

The data will be packed using ATIS EMI records.

6.4 ODUF Pack Rejection

6.4.1 DPI will notify BellSouth within one business day of rejected packs (via the mutually agreed medium). Packs could be rejected because of pack sequencing discrepancies or a critical edit failure on the Pack Header or Pack Trailer records (i.e. out-of-balance condition on grand totals, invalid data populated). Standard ATIS EMI Error Codes will be used. DPI will not be required to return the actual rejected data to BellSouth. Rejected packs will be corrected and retransmitted to DPI by BellSouth.

6.5 ODUF Control Data

DPI will send one confirmation record per pack that is received from BellSouth. This confirmation record will indicate DPI received the pack and the acceptance or rejection of the pack. Pack Status Code(s) will be populated using standard ATIS EMI error codes for packs that were rejected by DPI for reasons stated in the above section.

6.6 ODUF Testing

6.6.1 Upon request from DPI, BellSouth shall send test files to DPI for the ODUF. The Parties agree to review and discuss the file's content and/or format. For testing of usage results, BellSouth shall request that DPI set up a production (live) file. The live test may consist of DPI's employees making test calls for the types of services DPI requests on the ODUF. These test calls are logged by DPI, and the logs are provided to BellSouth. These logs will be used to verify the files. Testing will be completed within 30 calendar days from the date on which the initial test file was sent.

Enhanced Optional Daily Usage File

1. Upon written request from DPI, BellSouth will provide the Enhanced Optional Daily Usage File (EODUF) service to DPI pursuant to the terms and conditions set forth in this section. EODUF will only be sent to existing ODUF subscribers who request the EODUF option.

2. DPI shall furnish all relevant information required by BellSouth for the provision of the EODUF.

3. The EODUF will provide usage data for local calls originating from resold Flat Rate Business and Residential Lines.

4. Charges for delivery of the EODUF will appear on DPI's monthly bills. EODUF charges are billed at the EODUF rates that are in effect at the end of the previous month. The charges are as set forth in Exhibit E to this Attachment.

5. All messages will be in the standard Alliance for Telecommunications Industry Solutions (ATIS) EMI record format.

6. Messages that error in the billing system of DPI will be the responsibility of DPI. If, however, DPI should encounter significant volumes of errored messages that prevent processing by DPI within its systems, BellSouth will work with DPI to determine the source of the errors and the appropriate resolution.

7. The following specifications shall apply to the EODUF feed.

7.1 Usage To Be Transmitted

7.1.1 The following messages recorded by BellSouth will be transmitted to DPI:

Customer usage data for flat rated local call originating from DPI's End User lines (1FB or 1FR). The EODUF record for flat rate messages will include:

Date of Call

From Number

To Number

Connect Time

Conversation Time

Method of Recording

From RAO

Rate Class

Message Type

Billing Indicators

Bill to Number

7.1.2 BellSouth will perform duplicate record checks on EODUF records processed to O DUF. Any duplicate messages detected will be deleted and not sent to DPI.

7.1.3 In the event that DPI detects a duplicate on EODUF they receive from BellSouth, DPI will drop the duplicate message (DPI will not return the duplicate to BellSouth).

7.2 Physical File Characteristics

7.2.1 The EODUF feed will be distributed to DPI via Connect: Direct, Secure File Transfer Protocol (FTP)or another mutually agreed medium. The EODUF messages will be intermingled among DPI's Optional Daily Usage File (ODUF) messages. The EODUF will be a variable block format. The data on the EODUF will be in a non-compacted EMI format (175 byte format plus modules). It will be created on a daily basis Monday through Friday except holiday.

7.2.2 Data circuits (private line or dial-up) may be required between BellSouth and DPI for the purpose of data transmission as set forth in Section 6.2.2 above.

7.2.3 If DPI utilizes Secure File Transfer Protocol (FTP)for data file transmission, purchase of the Secure File Transfer Protocol (FTP)software will be the responsibility of DPI.

7.3 Packing Specifications

7.3.1 A pack will contain a minimum of one message record or a maximum of 99,999 message records plus a pack header record and a pack trailer record. One transmission can contain a maximum of 99 packs and a minimum of one pack.

7.3.2 The OCN, From (RAO), and Invoice Number will control the invoice sequencing. The From RAO will be used to identify to DPI which BellSouth RAO is sending the message. BellSouth and DPI will use the invoice sequencing to control data exchange.

BellSouth will be notified of sequence failures identified by DPI and resend the data as appropriate.

The data will be packed using ATIS EMI Records.

RESALE DISCOUNTS AND RATES - Alabama

CATEGORY	RATE ELEMENTS	Interim	Zone	BCS	USOC	RATES($)					Svc Order Submitted Elec per LSR	Svc Order Submitted Manually per LSR	Attachment: 1 Incremental Charge - Manual Svc Order vs. Electronic-1st	Attachment: 1 Incremental Charge - Manual Svc Order vs. Electronic-Add'l	Exhibit: E Incremental Charge - Manual Svc Order vs. Electronic-Disc 1st	Exhibit: E Incremental Charge - Manual Svc Order vs. Electronic-Disc Add'l
							Nonrecurring		Nonrecurring Disconnect		OSS Rates($)					
						Rec	First	Add'l	First	Add'l	SOMEC	SOMAN	SOMAN	SOMAN	SOMAN	SOMAN
APPLICABLE DISCOUNTS																
	Residence %					16.30										
	Business %					16.30										
	CSAs %					16.30										
OPERATIONAL SUPPORT SYSTEMS (OSS) RATES																
	Electronic LSR				SOMEC		3.50	3.50	3.50	3.50						
	Manual LSR				SOMAN		19.99	19.99	19.99	19.99						
SELECTIVE CALL ROUTING USING LINE CLASS CODES (SCR-LCC)																
	Selective Routing Per Unique Line Class Code Per Request Per Switch						84.70	84.70	14.11	14.11						
DIRECTORY ASSISTANCE CUSTOM BRANDING ANNOUNCEMENT via OLNS SOFTWARE																
	Recording of DA Custom Branded Announcement						3,000.00	3,000.00								
	Loading of DA Custom Branded Anouncement per Switch per OCN						1,170.00	1,170.00								
DIRECTORY ASSISTANCE UNBRANDING via OLNS SOFTWARE																
	Loading of DA per OCN (1 OCN per Order)						420.00	420.00								
	Loading of DA per Switch per OCN						16.00	16.00								
OPERATOR ASSISTANCE CUSTOM BRANDING ANNOUNCEMENT via OLNS SOFTWARE																
	Recording of Custom Branded OA Announcement						7,000.00	7,000.00								
	Loading of Custom Branded OA Announcement per shelf/NAV per OCN						500.00	500.00								
	Loading of OA Custom Branded Announcement per Switch per OCN						1,170.00	1,170.00								
OPERATOR ASSISTANCE UNBRANDING via OLNS SOFTWARE																
	Loading of OA per OCN (Regional)						1,200.00	1,200.00								
ODUF/EODUF SERVICES																
	OPTIONAL DAILY USAGE FILE (ODUF)															
	ODUF: Recording, per message					0.000011										
	ODUF: Message Processing, per message					0.004101										
	ODUF: Message Processing, per Magnetic Tape provisioned					42.67										
	ODUF: Data Transmission (CONNECT:DIRECT), per message					0.000094										
	ENHANCED OPTIONAL DAILY USAGE FILE (EODUF)															
	EODUF: Message Processing, per message					0.22										

RESALE DISCOUNTS AND RATES - Florida

CATEGORY	RATE ELEMENTS	Interim	Zone	BCS	USOC	RATES($)					Svc Order Submitted Elec per LSR	Svc Order Submitted Manually per LSR	Attachment: 1 Incremental Charge - Manual Svc Order vs. Electronic-1st	Attachment: 1 Incremental Charge - Manual Svc Order vs. Electronic-Add'l	Exhibit: E Incremental Charge - Manual Svc Order vs. Electronic-Disc 1st	Exhibit: E Incremental Charge - Manual Svc Order vs. Electronic-Disc Add'l
							Nonrecurring		Nonrecurring Disconnect		OSS Rates($)					
						Rec	First	Add'l	First	Add'l	SOMEC	SOMAN	SOMAN	SOMAN	SOMAN	SOMAN
APPLICABLE DISCOUNTS																
	Residence %					21.83										
	Business %					16.81										
	CSAs %					16.81										
OPERATIONAL SUPPORT SYSTEMS (OSS) RATES																
	Electronic LSR				SOMEC		3.50	3.50	3.50	3.50						
	Manual LSR				SOMAN		19.99	19.99	19.99	19.99						
SELECTIVE CALL ROUTING USING LINE CLASS CODES (SCR-LCC)																
	Selective Routing Per Unique Line Class Code Per Request Per Switch						93.55	93.55	11.46	11.46						
DIRECTORY ASSISTANCE CUSTOM BRANDING ANNOUNCEMENT via OLNS SOFTWARE																
	Recording of DA Custom Branded Announcement						3,000.00	3,000.00								
	Loading of DA Custom Branded Anouncement per Switch per OCN						1,170.00	1,170.00								
DIRECTORY ASSISTANCE UNBRANDING via OLNS SOFTWARE																
	Loading of DA per OCN (1 OCN per Order)						420.00	420.00								
	Loading of DA per Switch per OCN						16.00	16.00								
OPERATOR ASSISTANCE CUSTOM BRANDING ANNOUNCEMENT via OLNS SOFTWARE																
	Recording of Custom Branded OA Announcement						7,000.00	7,000.00								
	Loading of Custom Branded OA Announcement per shelf/NAV per OCN						500.00	500.00								
	Loading of OA Custom Branded Announcement per Switch per OCN						1,170.00	1,170.00								
OPERATOR ASSISTANCE UNBRANDING via OLNS SOFTWARE																
	Loading of OA per OCN (Regional)						1,200.00	1,200.00								
ODUF/EODUF SERVICES																
	OPTIONAL DAILY USAGE FILE (ODUF)															
	ODUF: Recording, per message					0.0000071										
	ODUF: Message Processing, per message					0.002146										
	ODUF: Message Processing, per Magnetic Tape provisioned					35.91										
	ODUF: Data Transmission (CONNECT:DIRECT), per message					0.00010375										
	ENHANCED OPTIONAL DAILY USAGE FILE (EODUF)															
	EODUF: Message Processing, per message					0.080698										

RESALE DISCOUNTS AND RATES - Georgia														Attachment: 1		Exhibit: E	
CATEGORY		RATE ELEMENTS	Interim	Zone	BCS	USOC	RATES($)					Svc Order Submitted Elec per LSR	Svc Order Submitted Manually per LSR	Incremental Charge - Manual Svc Order vs. Electronic-1st	Incremental Charge - Manual Svc Order vs. Electronic-Add'l	Incremental Charge - Manual Svc Order vs. Electronic-Disc 1st	Incremental Charge - Manual Svc Order vs. Electronic-Disc Add'l
								Nonrecurring		Nonrecurring Disconnect		OSS Rates($)					
							Rec	First	Add'l	First	Add'l	SOMEC	SOMAN	SOMAN	SOMAN	SOMAN	SOMAN
APPLICABLE DISCOUNTS																	
		Residence %					20.30										
		Business %					17.30										
		CSAs %					17.30										
OPERATIONAL SUPPORT SYSTEMS (OSS) RATES																	
		Electronic LSR				SOMEC		3.50	3.50	3.50	3.50						
		Manual LSR				SOMAN		19.99	19.99	19.99	19.99						
SELECTIVE CALL ROUTING USING LINE CLASS CODES (SCR-LCC)																	
		Selective Routing Per Unique Line Class Code Per Request Per Switch						199.56	199.56								
DIRECTORY ASSISTANCE CUSTOM BRANDING ANNOUNCEMENT via OLNS SOFTWARE																	
		Recording of DA Custom Branded Announcement						3,000.00	3,000.00								
		Loading of DA Custom Branded Anouncement per Switch per OCN						1,170.00	1,170.00								
DIRECTORY ASSISTANCE UNBRANDING via OLNS SOFTWARE																	
		Loading of DA per OCN (1 OCN per Order)						420.00	420.00								
		Loading of DA per Switch per OCN						16.00	16.00								
OPERATOR ASSISTANCE CUSTOM BRANDING ANNOUNCEMENT via OLNS SOFTWARE																	
		Recording of Custom Branded OA Announcement						7,000.00	7,000.00								
		Loading of Custom Branded OA Announcement per shelf/NAV per OCN						500.00	500.00								
		Loading of OA Custom Branded Announcement per Switch per OCN						1,170.00	1,170.00								
OPERATOR ASSISTANCE UNBRANDING via OLNS SOFTWARE																	
		Loading of OA per OCN (Regional)						1,200.00	1,200.00								
ODUF/EODUF SERVICES																	
	OPTIONAL DAILY USAGE FILE (ODUF)																
		ODUF: Recording, per message					0.0001275										
		ODUF: Message Processing, per message					0.0082548										
		ODUF: Message Processing, per Magnetic Tape provisioned					28.85										
		ODUF: Data Transmission (CONNECT:DIRECT), per message					0.0000434										
	ENHANCED OPTIONAL DAILY USAGE FILE (EODUF)																
		EODUF: Message Processing, per message					0.0034555										

RESALE DISCOUNTS AND RATES - Kentucky														Attachment: 1		Exhibit: E	
CATEGORY		RATE ELEMENTS	Interim	Zone	BCS	USOC	RATES($)					Svc Order Submitted Elec per LSR	Svc Order Submitted Manually per LSR	Incremental Charge - Manual Svc Order vs. Electronic-1st	Incremental Charge - Manual Svc Order vs. Electronic-Add'l	Incremental Charge - Manual Svc Order vs. Electronic-Disc 1st	Incremental Charge - Manual Svc Order vs. Electronic-Disc Add'l
								Nonrecurring		Nonrecurring Disconnect		OSS Rates($)					
							Rec	First	Add'l	First	Add'l	SOMEC	SOMAN	SOMAN	SOMAN	SOMAN	SOMAN
APPLICABLE DISCOUNTS																	
		Residence %					16.79										
		Business %					15.54										
		CSAs %					15.54										
OPERATIONAL SUPPORT SYSTEMS (OSS) RATES																	
		Electronic LSR				SOMEC		3.50	3.50	3.50	3.50						
		Manual LSR				SOMAN		19.99	19.99	19.99	19.99						
SELECTIVE CALL ROUTING USING LINE CLASS CODES (SCR-LCC)																	
		Selective Routing Per Unique Line Class Code Per Request Per Switch						93.53	93.53	15.58	15.58						
DIRECTORY ASSISTANCE CUSTOM BRANDING ANNOUNCEMENT via OLNS SOFTWARE																	
		Recording of DA Custom Branded Announcement						3,000.00	3,000.00								
		Loading of DA Custom Branded Anouncement per Switch per OCN						1,170.00	1,170.00								
DIRECTORY ASSISTANCE UNBRANDING via OLNS SOFTWARE																	
		Loading of DA per OCN (1 OCN per Order)						420.00	420.00								
		Loading of DA per Switch per OCN						16.00	16.00								
OPERATOR ASSISTANCE CUSTOM BRANDING ANNOUNCEMENT via OLNS SOFTWARE																	
		Recording of Custom Branded OA Announcement						7,000.00	7,000.00								
		Loading of Custom Branded OA Announcement per shelf/NAV per OCN						500.00	500.00								
		Loading of OA Custom Branded Announcement per Switch per OCN						1,170.00	1,170.00								
OPERATOR ASSISTANCE UNBRANDING via OLNS SOFTWARE																	
		Loading of OA per OCN (Regional)						1,200.00	1,200.00								
ODUF/EODUF SERVICES																	
	OPTIONAL DAILY USAGE FILE (ODUF)																
		ODUF: Recording, per message					0.0000136										
		ODUF: Message Processing, per message					0.002506										
		ODUF: Message Processing, per Magnetic Tape provisioned					35.90										
		ODUF: Data Transmission (CONNECT:DIRECT), per message					0.00010372										
	ENHANCED OPTIONAL DAILY USAGE FILE (EODUF)																
		EODUF: Message Processing, per message					0.235889										

RESALE DISCOUNTS AND RATES - Louisiana														Attachment: 1		Exhibit: E	
CATEGORY		RATE ELEMENTS	Interim	Zone	BCS	USOC	RATES($)					Svc Order Submitted Elec per LSR	Svc Order Submitted Manually per LSR	Incremental Charge - Manual Svc Order vs. Electronic-1st	Incremental Charge - Manual Svc Order vs. Electronic-Add'l	Incremental Charge - Manual Svc Order vs. Electronic-Disc 1st	Incremental Charge - Manual Svc Order vs. Electronic-Disc Add'l
								Nonrecurring		Nonrecurring Disconnect		OSS Rates($)					
							Rec	First	Add'l	First	Add'l	SOMEC	SOMAN	SOMAN	SOMAN	SOMAN	SOMAN
APPLICABLE DISCOUNTS																	
		Residence %					20.72										
		Business %					20.72										
		CSAs %					9.05										
OPERATIONAL SUPPORT SYSTEMS (OSS) RATES																	
		Electronic LSR				SOMEC		3.50	3.50	3.50	3.50						
		Manual LSR				SOMAN		19.99	19.99	19.99	19.99						
SELECTIVE CALL ROUTING USING LINE CLASS CODES (SCR-LCC)																	
		Selective Routing Per Unique Line Class Code Per Request Per Switch						82.25	82.25								
DIRECTORY ASSISTANCE CUSTOM BRANDING ANNOUNCEMENT via OLNS SOFTWARE																	
		Recording of DA Custom Branded Announcement						3,000.00	3,000.00								
		Loading of DA Custom Branded Anouncement per Switch per OCN						1,170.00	1,170.00								
DIRECTORY ASSISTANCE UNBRANDING via OLNS SOFTWARE																	
		Loading of DA per OCN (1 OCN per Order)						420.00	420.00								
		Loading of DA per Switch per OCN						16.00	16.00								
OPERATOR ASSISTANCE CUSTOM BRANDING ANNOUNCEMENT via OLNS SOFTWARE																	
		Recording of Custom Branded OA Announcement						7,000.00	7,000.00								
		Loading of Custom Branded OA Announcement per shelf/NAV per OCN						500.00	500.00								
		Loading of OA Custom Branded Announcement per Switch per OCN						1,170.00	1,170.00								
OPERATOR ASSISTANCE UNBRANDING via OLNS SOFTWARE																	
		Loading of OA per OCN (Regional)						1,200.00	1,200.00								
ODUF/EODUF SERVICES																	
	OPTIONAL DAILY USAGE FILE (ODUF)																
		ODUF: Recording, per message					0.0000117										
		ODUF: Message Processing, per message					0.004641										
		ODUF: Message Processing, per Magnetic Tape provisioned					48.45										
		ODUF: Data Transmission (CONNECT:DIRECT), per message					0.00010568										
	ENHANCED OPTIONAL DAILY USAGE FILE (EODUF)																
		EODUF: Message Processing, per message					0.250015										

RESALE DISCOUNTS AND RATES - Mississippi														Attachment: 1		Exhibit: E	
CATEGORY		RATE ELEMENTS	Interim	Zone	BCS	USOC	RATES($)					Svc Order Submitted Elec per LSR	Svc Order Submitted Manually per LSR	Incremental Charge - Manual Svc Order vs. Electronic-1st	Incremental Charge - Manual Svc Order vs. Electronic-Add'l	Incremental Charge - Manual Svc Order vs. Electronic-Disc 1st	Incremental Charge - Manual Svc Order vs. Electronic-Disc Add'l
								Nonrecurring		Nonrecurring Disconnect		OSS Rates($)					
							Rec	First	Add'l	First	Add'l	SOMEC	SOMAN	SOMAN	SOMAN	SOMAN	SOMAN
APPLICABLE DISCOUNTS																	
		Residence %					15.75										
		Business %					15.75										
		CSAs %					15.75										
OPERATIONAL SUPPORT SYSTEMS (OSS) RATES																	
		Electronic LSR				SOMEC		3.50	3.50	3.50	3.50						
		Manual LSR				SOMAN		19.99	19.99	19.99	19.99						
SELECTIVE CALL ROUTING USING LINE CLASS CODES (SCR-LCC)																	
		Selective Routing Per Unique Line Class Code Per Request Per Switch						85.19	85.19	14.19	14.19						
DIRECTORY ASSISTANCE CUSTOM BRANDING ANNOUNCEMENT via OLNS SOFTWARE																	
		Recording of DA Custom Branded Announcement						3,000.00	3,000.00								
		Loading of DA Custom Branded Anouncement per Switch per OCN						1,170.00	1,170.00								
DIRECTORY ASSISTANCE UNBRANDING via OLNS SOFTWARE																	
		Loading of DA per OCN (1 OCN per Order)						420.00	420.00								
		Loading of DA per Switch per OCN						16.00	16.00								
OPERATOR ASSISTANCE CUSTOM BRANDING ANNOUNCEMENT via OLNS SOFTWARE																	
		Recording of Custom Branded OA Announcement						7,000.00	7,000.00								
		Loading of Custom Branded OA Announcement per shelf/NAV per OCN						500.00	500.00								
		Loading of OA Custom Branded Announcement per Switch per OCN						1,170.00	1,170.00								
OPERATOR ASSISTANCE UNBRANDING via OLNS SOFTWARE																	
		Loading of OA per OCN (Regional)						1,200.00	1,200.00								
ODUF/EODUF SERVICES																	
	OPTIONAL DAILY USAGE FILE (ODUF)																
		ODUF: Recording, per message					0.0000063										
		ODUF: Message Processing, per message					0.004707										
		ODUF: Message Processing, per Magnetic Tape provisioned					49.04										
		ODUF: Data Transmission (CONNECT:DIRECT), per message					0.00010669										
	ENHANCED OPTIONAL DAILY USAGE FILE (EODUF)																
		EODUF: Message Processing, per message					0.250424										

RESALE DISCOUNTS AND RATES - North Carolina														Attachment: 1		Exhibit: E	
CATEGORY		RATE ELEMENTS	Interim	Zone	BCS	USOC	RATES($)					Svc Order Submitted Elec per LSR	Svc Order Submitted Manually per LSR	Incremental Charge - Manual Svc Order vs. Electronic-1st	Incremental Charge - Manual Svc Order vs. Electronic-Add'l	Incremental Charge - Manual Svc Order vs. Electronic-Disc 1st	Incremental Charge - Manual Svc Order vs. Electronic-Disc Add'l
								Nonrecurring		Nonrecurring Disconnect		OSS Rates($)					
							Rec	First	Add'l	First	Add'l	SOMEC	SOMAN	SOMAN	SOMAN	SOMAN	SOMAN
APPLICABLE DISCOUNTS																	
		Residence %					21.50										
		Business %					17.60										
		CSAs %					17.60										
OPERATIONAL SUPPORT SYSTEMS (OSS) RATES																	
		Electronic LSR				SOMEC		3.50	3.50	3.50	3.50						
		Manual LSR				SOMAN		19.99	19.99	19.99	19.99						
SELECTIVE CALL ROUTING USING LINE CLASS CODES (SCR-LCC)																	
		Selective Routing Per Unique Line Class Code Per Request Per Switch						82.25	82.25	14.14	14.14						
DIRECTORY ASSISTANCE CUSTOM BRANDING ANNOUNCEMENT via OLNS SOFTWARE																	
		Recording of DA Custom Branded Announcement						3,000.00	3,000.00								
		Loading of DA Custom Branded Anouncement per Switch per OCN						1,170.00	1,170.00								
DIRECTORY ASSISTANCE UNBRANDING via OLNS SOFTWARE																	
		Loading of DA per OCN (1 OCN per Order)						420.00	420.00								
		Loading of DA per Switch per OCN						16.00	16.00								
OPERATOR ASSISTANCE CUSTOM BRANDING ANNOUNCEMENT via OLNS SOFTWARE																	
		Recording of Custom Branded OA Announcement						7,000.00	7,000.00								
		Loading of Custom Branded OA Announcement per shelf/NAV per OCN						500.00	500.00								
		Loading of OA Custom Branded Announcement per Switch per OCN						1,170.00	1,170.00								
OPERATOR ASSISTANCE UNBRANDING via OLNS SOFTWARE																	
		Loading of OA per OCN (Regional)						1,200.00	1,200.00								
ODUF/EODUF SERVICES																	
	OPTIONAL DAILY USAGE FILE (ODUF)																
		ODUF: Recording, per message					0.0003										
		ODUF: Message Processing, per message					0.0032										
		ODUF: Message Processing, per Magnetic Tape provisioned					54.61										
		ODUF: Data Transmission (CONNECT:DIRECT), per message					0.00004										
	ENHANCED OPTIONAL DAILY USAGE FILE (EODUF)																
		EODUF: Message Processing, per message					0.2285406										

RESALE DISCOUNTS AND RATES - South Carolina														Attachment: 1		Exhibit: E	
CATEGORY		RATE ELEMENTS	Interim	Zone	BCS	USOC	RATES($)					Svc Order Submitted Elec per LSR	Svc Order Submitted Manually per LSR	Incremental Charge - Manual Svc Order vs. Electronic-1st	Incremental Charge - Manual Svc Order vs. Electronic-Add'l	Incremental Charge - Manual Svc Order vs. Electronic-Disc 1st	Incremental Charge - Manual Svc Order vs. Electronic-Disc Add'l
								Nonrecurring		Nonrecurring Disconnect		OSS Rates($)					
							Rec	First	Add'l	First	Add'l	SOMEC	SOMAN	SOMAN	SOMAN	SOMAN	SOMAN
APPLICABLE DISCOUNTS																	
		Residence %					14.80										
		Business %					14.80										
		CSAs %					8.98										
OPERATIONAL SUPPORT SYSTEMS (OSS) RATES																	
		Electronic LSR				SOMEC		3.50	3.50	3.50	3.50						
		Manual LSR				SOMAN		19.99	19.99	19.99	19.99						
SELECTIVE CALL ROUTING USING LINE CLASS CODES (SCR-LCC)																	
		Selective Routing Per Unique Line Class Code Per Request Per Switch						84.89	84.89	14.14	14.14						
DIRECTORY ASSISTANCE CUSTOM BRANDING ANNOUNCEMENT via OLNS SOFTWARE																	
		Recording of DA Custom Branded Announcement						3,000.00	3,000.00								
		Loading of DA Custom Branded Anouncement per Switch per OCN						1,170.00	1,170.00								
DIRECTORY ASSISTANCE UNBRANDING via OLNS SOFTWARE																	
		Loading of DA per OCN (1 OCN per Order)						420.00	420.00								
		Loading of DA per Switch per OCN						16.00	16.00								
OPERATOR ASSISTANCE CUSTOM BRANDING ANNOUNCEMENT via OLNS SOFTWARE																	
		Recording of Custom Branded OA Announcement						7,000.00	7,000.00								
		Loading of Custom Branded OA Announcement per shelf/NAV per OCN						500.00	500.00								
		Loading of OA Custom Branded Announcement per Switch per OCN						1,170.00	1,170.00								
OPERATOR ASSISTANCE UNBRANDING via OLNS SOFTWARE																	
		Loading of OA per OCN (Regional)						1,200.00	1,200.00								
ODUF/EODUF SERVICES																	
	OPTIONAL DAILY USAGE FILE (ODUF)																
		ODUF: Recording, per message					0.0000216										
		ODUF: Message Processing, per message					0.004704										
		ODUF: Message Processing, per Magnetic Tape provisioned					48.87										
		ODUF: Data Transmission (CONNECT:DIRECT), per message					0.00010863										
	ENHANCED OPTIONAL DAILY USAGE FILE (EODUF)																
		EODUF: Message Processing, per message					0.258301										

RESALE DISCOUNTS AND RATES - Tennessee														Attachment: 1		Exhibit: E	
CATEGORY		RATE ELEMENTS	Interim	Zone	BCS	USOC	RATES($)					Svc Order Submitted Elec per LSR	Svc Order Submitted Manually per LSR	Incremental Charge - Manual Svc Order vs. Electronic-1st	Incremental Charge - Manual Svc Order vs. Electronic-Add'l	Incremental Charge - Manual Svc Order vs. Electronic-Disc 1st	Incremental Charge - Manual Svc Order vs. Electronic-Disc Add'l
								Nonrecurring		Nonrecurring Disconnect		OSS Rates($)					
							Rec	First	Add'l	First	Add'l	SOMEC	SOMAN	SOMAN	SOMAN	SOMAN	SOMAN
APPLICABLE DISCOUNTS																	
		Residence %					16.00										
		Business %					16.00										
		CSAs %					16.00										
OPERATIONAL SUPPORT SYSTEMS (OSS) RATES																	
		Electronic LSR				SOMEC		3.50	3.50	3.50	3.50						
		Manual LSR				SOMAN		19.99	19.99	19.99	19.99						
SELECTIVE CALL ROUTING USING LINE CLASS CODES (SCR-LCC)																	
		Selective Routing Per Unique Line Class Code Per Request Per Switch						179.60	179.60								
DIRECTORY ASSISTANCE CUSTOM BRANDING ANNOUNCEMENT via OLNS SOFTWARE																	
		Recording of DA Custom Branded Announcement						1,555.00	1,553.00	7.03	7.03						
		Loading of DA Custom Branded Anouncement per Switch per OCN						240.71	240.71								
DIRECTORY ASSISTANCE UNBRANDING via OLNS SOFTWARE																	
		Loading of DA per OCN (1 OCN per Order)						420.00	420.00								
		Loading of DA per Switch per OCN						16.00	16.00								
OPERATOR ASSISTANCE CUSTOM BRANDING ANNOUNCEMENT via OLNS SOFTWARE																	
		Recording of Custom Branded OA Announcement						1,555.00	1,555.00								
		Loading of Custom Branded OA Announcement per shelf/NAV per OCN						240.71	240.71								
		Loading of OA Custom Branded Announcement per Switch per OCN						240.71	240.71								
OPERATOR ASSISTANCE UNBRANDING via OLNS SOFTWARE																	
		Loading of OA per OCN (Regional)						1,200.00	1,200.00								
ODUF/EODUF SERVICES																	
	OPTIONAL DAILY USAGE FILE (ODUF)																
		ODUF: Recording, per message					0.0000044										
		ODUF: Message Processing, per message					0.0027366										
		ODUF: Message Processing, per Magnetic Tape provisioned					52.75										
		ODUF: Data Transmission (CONNECT:DIRECT), per message					0.0000339										
	ENHANCED OPTIONAL DAILY USAGE FILE (EODUF)																
		EODUF: Message Processing, per message					0.004										

Attachment 2

Network Elements and Other Services

TABLE OF CONTENTS

1 INTRODUCTION 3

2 UNBUNDLED LOOPS 4

3 HIGH FREQUENCY SPECTRUM NETWORK ELEMENT 25

4 LOCAL SWITCHING 35

5 UNBUNDLED NETWORK ELEMENT COMBINATIONS 42

6 TRANSPORT, CHANNELIZATION AND DARK FIBER 48

7 BELLSOUTH SWITCHED ACCESS (SWA) 8XX TOLL FREE DIALING TEN DIGIT SCREENING SERVICE 53

8 LINE INFORMATION DATABASE (LIDB) 53

9 SIGNALING 55

10 OPERATOR SERVICES (OPERATOR CALL PROCESSING AND DIRECTORY ASSISTANCE) 61

11 AUTOMATIC LOCATION IDENTIFICATION/DATA MANAGEMENT SYSTEM (ALI/DMS) 67

12 CALLING NAME (CNAM) DATABASE SERVICE 67

13 SERVICE CREATION ENVIRONMENT AND SERVICE MANAGEMENT SYSTEM (SCE/SMS) ADVANCED INTELLIGENT NETWORK (AIN) ACCESS 68

14 BASIC 911 AND E911 69

15 OPERATIONAL SUPPORT SYSTEMS (OSS) 70

LIDB Storage Agreement ..... Exhibit A

Rates ..... Exhibit B

ACCESS TO NETWORK ELEMENTS AND OTHER SERVICES

1 Introduction

1.1 This Attachment sets forth rates, terms and conditions for Network Elements and combinations of Network Elements that BellSouth agrees to offer to DPI in accordance with its obligations under Section 251(c)(3) of the Act. Additionally, this Attachment sets forth the rates, terms and conditions for other services BellSouth makes available to DPI. The rates for each Network Element and combination of Network Elements and other services are set forth in Exhibit B of this Agreement. Additionally, the provision of a particular Network Element or service may require DPI to purchase other Network Elements or services.

1.2 For purposes of this Agreement**, "**Network Element**"** is defined to mean a facility or equipment DPI used in the provision of a telecommunications service. For purposes of this Agreement, combinations of Network Elements shall be referred to as "Combinations."

1.3 BellSouth shall, upon request of DPI, and to the extent technically feasible, provide to DPI access to its Network Elements for the provision of DPI's telecommunications services. If no rate is identified in this Agreement, the rate for the specific service or function will be as set forth in the applicable BellSouth tariff or as negotiated by the Parties upon request by either Party.

1.4 DPI may purchase Network Elements and other services from BellSouth for the purpose of combining such network elements in any manner DPI chooses to provide telecommunication services to its intended users, including recreating existing BellSouth services. With the exception of the sub-loop Network Elements which are located outside of the central office, BellSouth shall deliver the Network Elements purchased by DPI to the demarcation point associated with DPI's collocation arrangement.

1.5 BellSouth shall comply with the requirements as set forth in the technical references within this Attachment 2.

1.6 DPI may not purchase unbundled network elements (UNEs) or convert special access circuits to UNEs if such network elements will be used to provide wireless telecommunications services.

1.7 BellSouth shall not connect individual UNEs or combinations of UNEs to BellSouth tariffed services.

1.8 If DPI reports a trouble on a UNE and no trouble actually exists on the BellSouth portion, BellSouth will charge DPI for any dispatching and testing (both inside and outside the CO) required by BellSouth in order to confirm the UNE's working status.

1.9 Rates

1.9.1 The prices that DPI shall pay to BellSouth for Network Elements and Other Services are set forth in Exhibit B to this Attachment. If DPI purchases a service(s) from a tariff, all terms and conditions and rates as set forth in such tariff shall apply.

1.9.2 Rates, terms and conditions for order cancellation charges and Service Date Advancement Charges will apply in accordance with Attachment 6 and are incorporated herein by this reference.

1.9.3 If DPI modifies an order (Order Modification Charge (OMC)) after being sent a Firm Order Confirmation (FOC) from BellSouth, any costs incurred by BellSouth to accommodate the modification will be paid by DPI in accordance with FCC No. 1 Tariff, Section 5.

1.9.4 A one-month minimum billing period shall apply to all UNE conversions or new installations.

2 Unbundled Loops

2.1 General

2.1.1 The local loop Network Element (Loop) is defined as a transmission facility between a distribution frame (or its equivalent) in BellSouth's central office and the Loop demarcation point at an End User customer premises, including inside wire owned by BellSouth. The local Loop Network Element includes all features, functions, and capabilities of the transmission facilities, including dark fiber and attached electronics (except those used for the provision of advanced services, such as Digital Subscriber Line Access Multiplexers) and line conditioning.

2.1.2 The provisioning of a Loop to DPI's collocation space will require cross-office cabling and cross-connections within the central office to connect the Loop to a local switch or to other transmission equipment. These cross-connects are separate components that are not considered a part of the Loop, and thus, have a separate charge.

2.1.3 To the extent available within BellSouth's network at a particular location, BellSouth will offer Loops capable of supporting telecommunications services. If a requested Loop type is not available and cannot be made available through BellSouth's Unbundled Loop Modification process, then DPI can use the Special Construction process to request that BellSouth place facilities in order to meet DPI's Loop requirements. Standard Loop intervals shall not apply to the Special Construction process.

2.1.4 Where facilities are available, BellSouth will install Loops in compliance with BellSouth's Products and Services Interval Guide available at the website at

http://www.interconnection.bellsouth.com. For orders of 15 or more Loops, the installation and any applicable Order Coordination as described below will be handled on a project basis, and the intervals will be set by the BellSouth project manager for that order. When Loops require a Service Inquiry (SI) prior to issuing the order to determine if facilities are available, the interval for the SI process is separate from the installation interval.

2.1.5 The Loop shall be provided to DPI in accordance with BellSouth's TR73600 Unbundled Local Loop Technical Specification and applicable industry standard technical references.

2.1.6 DPI may utilize the unbundled Loops to provide telecommunications services as long as such services are consistent with industry standards and BellSouth's TR73600.

2.1.7 BellSouth will only provision, maintain and repair the Loops to the standards that are consistent with the type of Loop ordered. In those cases where DPI has requested that BellSouth modify a Loop so that it no longer meets the technical parameters of the original Loop type (e.g., voice grade, ISDN, ADSL, etc.), the resulting Loop will be maintained as an unbundled copper Loop (UCL), and DPI shall pay the recurring and nonrecurring charges for a UCL. For non-service specific Loops (e.g. UCL, Loops modified by DPI using the Unbundled Loop Modification (ULM) process), BellSouth will only support that the Loop has copper continuity and balanced tip-and-ring.

2.1.7.1 When a BellSouth technician is required to be dispatched to provision the Loop, BellSouth will tag the Loop with the Circuit ID number and the name of the ordering CLEC. When a dispatch is not required to provision the Loop, BellSouth will tag the Loop on the next required visit to the end user's location. If DPI wants to ensure the Loop is tagged during the provisioning process for Loops that may not require a dispatch (e.g. UVL-SL1, UVL-SL2, UCL-ND, DPI may order Loop Tagging. Rates for Loop Tagging are as set forth in Exhibit B of this Attachment.

2.1.8 **Loop Testing/Trouble Reporting**

2.1.8.1 DPI will be responsible for testing and isolating troubles on the Loops. DPI must test and isolate trouble to the BellSouth portion of a designed/non-designed unbundled Loop (e.g., UVL-SL2, UCL-D, UVL-SL1, UCL-ND, etc.) before reporting repair to the UNE Customer Wholesale Interconnection Network Services (CWINS) Center. At the time of the trouble report, DPI will be required to provide the results of the DPI test which indicate a problem on the BellSouth provided Loop.

2.1.8.2 Once DPI has isolated a trouble to the BellSouth provided Loop, and had issued a trouble report to BellSouth on the Loop, BellSouth will take the actions necessary

to repair the Loop if a trouble actually exists. BellSouth will repair these Loops in the same time frames that BellSouth repairs similarly situated Loops to its end users.

2.1.8.3 If DPI reports a trouble on a non-designed or designed Loop and no trouble actually exists, BellSouth will charge DPI for any dispatching and testing (both inside and outside the CO) required by BellSouth in order to confirm the Loop's working status.

2.1.9 **Order Coordination and Order Coordination-Time Specific**

2.1.9.1 "Order Coordination" (OC) allows BellSouth and DPI to coordinate the installation of the SL2 Loops, Unbundled Digital Loops (UDL) and other Loops where OC may be purchased as an option, to DPI's facilities to limit end user service outage. OC is available when the Loop is provisioned over an existing circuit that is currently providing service to the end user. OC for physical conversions will be scheduled at BellSouth's discretion during normal working hours on the committed due date. OC shall be provided in accordance with the chart set forth below.

2.1.9.2 "Order Coordination – Time Specific" (OC-TS) allows DPI to order a specific time for OC to take place. BellSouth will make every effort to accommodate DPI's specific conversion time request. However, BellSouth reserves the right to negotiate with DPI a conversion time based on load and appointment control when necessary. This OC-TS is a chargeable option for all Loops except Unbundled Copper Loops (UCL) and Universal Digital Channel (UDC), and is billed in addition to the OC charge. DPI may specify a time between 9:00 a.m. and 4:00 p.m. (location time) Monday through Friday (excluding holidays). If DPI specifies a time outside this window, or selects a time or quantity of Loops that requires BellSouth technicians to work outside normal work hours, overtime charges will apply in addition to the OC and OC-TS charges. Overtime charges will be applied based on the amount of overtime worked and in accordance with the rates established in the Access Services Tariff, Section E13.2, for each state. The OC-TS charges for an order due on the same day at the same location will be applied on a per Local Service Request (LSR) basis.

2.1.10 **CLEC to CLEC Conversions for Unbundled Loops**

2.1.10.1 The CLEC to CLEC conversion process for unbundled Loops may be used by DPI when converting an existing unbundled Loop from another CLEC for the same end user. The Loop type being converted must be included in DPI's Interconnection Agreement before requesting a conversion.

2.1.10.2 To utilize the CLEC to CLEC conversion process, the Loop being converted must be the same Loop type with no requested changes to the Loop, must serve the

same end user location from the same serving wire center, and must not require an outside dispatch to provision.

2.1.10.3 The Loops converted to DPI pursuant to the CLEC to CLEC conversion process shall be provisioned in the same manner and with the same functionality and options as described in this Attachment for the specific Loop type.

2.1.10.4

	Order Coordination (OC)	Order Coordination – Time Specific (OC-TS)	Test Points	DLR	Charge for Dispatch and Testing if No Trouble Found
SL-1 **(Non-Designed)**	Chargeable Option	Chargeable Option	Not available	Chargeable Option – ordered as Engineering Information Document	Charged for Dispatch inside and outside Central Office
UCL-ND **(Non-Designed)**	Chargeable Option	Not Available	Not Available	Chargeable Option – ordered as Engineering Information Document	Charged for Dispatch inside and outside Central Office
Unbundled Voice Loops - SL-2 (including 2- and 4-wire UVL) (Designed)	Included	Chargeable Option	Included	Included	Charged for Dispatch outside Central Office
Unbundled Digital Loop (Designed)	Included	Chargeable Option (except on Universal Digital Channel)	Included (where appropriate)	Included	Charged for Dispatch outside Central Office
Unbundled Copper Loop (Designed)	Chargeable in accordance with Section 2	Not available	Included	Included	Charged for Dispatch outside Central Office
For UVL-SL1 and UCLs, DPI must order and will be billed for both OC and OC-TS if requesting OC-TS.					

2.2 **<u>Unbundled Voice Loops (UVLs)</u>**

2.2.1 BellSouth shall make available the following UVLs:

2.2.1.1 2-wire Analog Voice Grade Loop – SL1 (Non-Designed)

2.2.1.2 2-wire Analog Voice Grade Loop – SL2 (Designed)

2.2.1.3 4-wire Analog Voice Grade Loop (Designed)

2.2.2 Unbundled Voice Loops (UVL) may be provisioned using any type of facility that will support voice grade services. This may include loaded copper, non-loaded copper, digital loop carrier systems, fiber or a combination of any of these facilities. BellSouth, in the normal course of maintaining, repairing, and configuring its network, may also change the facilities that are used to provide any given voice grade circuit. This change may occur at any time. In these situations, BellSouth will only ensure that the newly provided facility will support voice grade services. BellSouth will not guarantee that DPI will be able to continue to provide any advanced services over the new facility. BellSouth will offer UVL in two different service levels - Service Level One (SL1) and Service Level Two (SL2).

2.2.3 Unbundled Voice Loop - SL1 (UVL-SL1) Loops are 2-wire Loop start circuits, will be non-designed, and will not have remote access test points. OC will be offered as a chargeable option on SLI Loops when reuse of existing facilities has been requested by DPI. DPI may also order OC-TS when a specified conversion time is requested. OC-TS is a chargeable option for any coordinated order and is billed in addition to the OC charge. An Engineering Information (EI) document can be ordered as a chargeable option. The EI document provides Loop Make-Up information which is similar to the information normally provided in a Design Layout Record. Upon issuance of a non-coordinated order in the service order system, SL1 Loops will be activated on the due date in the same manner and time frames that BellSouth normally activates POTS-type Loops for its end users.

2.2.4 For an additional charge BellSouth will make available Loop Testing so that DPI may request further testing on new UVL-SL1 Loops. Rates for Loop Testing are as set forth in Exhibit B of this Attachment.

2.2.5 Unbundled Voice Loop – SL2 (UVL-SL2) Loops may be 2-wire or 4-wire circuits, shall have remote access test points, and will be designed with a Design Layout Record provided to DPI. SL2 circuits can be provisioned with loop start, ground start or reverse battery signaling. OC is provided as a standard feature on SL2 Loops. The OC feature will allow DPI to coordinate the installation of the Loop with the disconnect of an existing customer's service and/or number portability service. In these cases, BellSouth will perform the order conversion with standard order coordination at its discretion during normal work hours.

2.3 **Unbundled Digital Loops**

2.3.1 BellSouth will offer Unbundled Digital Loops (UDL). UDLs are service specific, will be designed, will be provisioned with test points (where appropriate), and will come standard with OC and a Design Layout Record (DLR). The various UDLs are intended to support a specific digital transmission scheme or service.

2.3.2 BellSouth shall make available the following UDLs:

2.3.2.1 2-wire Unbundled ISDN Digital Loop

2.3.2.2 2-wire Universal Digital Channel (IDSL Compatible)

2.3.2.3 2-wire Unbundled ADSL Compatible Loop

2.3.2.4 2-wire Unbundled HDSL Compatible Loop

2.3.2.5 4-wire Unbundled HDSL Compatible Loop

2.3.2.6 4-wire Unbundled DS1 Digital Loop

2.3.2.7 4-wire Unbundled Digital Loop/DS0 – 64 kbps, 56 kbps and below

2.3.2.8 DS3 Loop

2.3.2.9 STS-1 Loop

2.3.3 2-Wire Unbundled ISDN Digital Loops will be provisioned according to industry standards for 2-Wire Basic Rate ISDN services and will come standard with a test point, Order Coordination, and a DLR. DPI will be responsible for providing BellSouth with a Service Profile Identifier (SPID) associated with a particular ISDN-capable Loop and end user. With the SPID, BellSouth will be able to adequately test the circuit and ensure that it properly supports ISDN service. BellSouth will not reconfigure its ISDN-capable Loop to support IDSL service.

2.3.3.1 The Universal Digital Channel (UDC) (also known as IDSL-compatible Loop) is intended to be compatible with IDSL service and has the same physical characteristics and transmission specifications as BellSouth's ISDN-capable Loop. These specifications are listed in BellSouth's TR73600.

2.3.3.2 The UDC may be provisioned on copper or through a Digital Loop Carrier (DLC) system. When UDC Loops are provisioned using a DLC system, the Loops will be provisioned on time slots that are compatible with data-only services such as IDSL.

2.3.4 2-Wire ADSL-Compatible Loop. This is a designed Loop that is provisioned according to Revised Resistance Design (RRD) criteria and may be up to 18kft long and may have up to 6kft of bridged tap (inclusive of Loop length). The Loop is a 2-wire circuit and will come standard with a test point, Order Coordination, and a DLR.

2.3.5 2-Wire or 4-Wire HDSL-Compatible Loop. This is a designed Loop that is provisioned according to Carrier Serving Area (CSA) criteria and may be up to 12,000 feet long and may have up to 2,500 feet of bridged tap (inclusive of Loop length). It may be a 2-wire or 4-wire circuit and will come standard with a test point, Order Coordination, and a DLR.

2.3.6 4-Wire Unbundled DS1 Digital Loop. This is a designed 4-wire Loop that is provisioned according to industry standards for DS1 or Primary Rate ISDN services and will come standard with a test point, Order Coordination, and a DLR. A DS1 Loop may be provisioned over a variety of loop transmission technologies including copper, HDSL-based technology or fiber optic transport systems. It will include a 4-Wire DS1 Network Interface at the End User's location.

2.3.7 4-Wire Unbundled Digital/DS0 Loop. These are designed 4-wire Loops that may be configured as 64kbps, 56kbps, 19kbps, and other sub-rate speeds associated with digital data services and will come standard with a test point, Order Coordination, and a DLR.

2.3.8 DS3 Loop**.** DS3 Loop is a two-point digital transmission path which provides for simultaneous two-way transmission of serial, bipolar, return-to-zero isochronous digital electrical signals at a transmission rate of 44.736 megabits per second (Mbps) that is dedicated to the use of the ordering CLEC in its provisioning of local exchange and associated exchange access services. It may provide transport for twenty-eight (28) DS1 channels, each of which provides the digital equivalent of twenty-four analog voice grade channels. The interface to unbundled dedicated DS3 transport is a metallic-based electrical interface.

2.3.9 STS-1 Loop**.** STS-1 Loop is a high-capacity digital transmission path with SONET VT1.5 mapping that is dedicated for the use of the ordering customer for the purpose of provisioning local exchange and associated exchange access services. It is a two-point digital transmission path which provides for simultaneous two-way transmission of serial bipolar return-to-zero synchronous digital electrical signals at a transmission rate of 51.84 megabits per second (Mbps). It may provide transport for twenty-eight (28) DS1 channels, each of which provides the digital equivalent of twenty-four analog voice grade channels. The interface to unbundled dedicated STS-1 transport is a metallic-based electrical interface.

2.3.10 DS3 services come with a test point and a DLR. Mileage is airline miles, rounded up and a minimum of one mile applies. BellSouth TR 73501 LightGate®Service Interface and Performance Specifications, Issue D, June 1995 applies to DS3 services.

2.4 **Unbundled Copper Loops (UCL)**

2.4.1 BellSouth shall make available Unbundled Copper Loops (UCLs). The UCL is a copper twisted pair Loop that is unencumbered by any intervening equipment (e.g., filters, load coils, range extenders, digital loop carrier, or repeaters) and is not intended to support any particular telecommunications service. The UCL will be offered in two types – Designed and Non-Designed.

2.4.2 **Unbundled Copper Loop – Designed (UCL-D)**

2.4.2.1 The UCL-D will be provisioned as a dry copper twisted pair Loop that is unencumbered by any intervening equipment (e.g., filters, load coils, range extenders, digital loop carrier, or repeaters). The UCL-D will be offered in two versions - Short and Long.

2.4.2.2 A short UCL-D (18,000 feet or less) is provisioned according to Resistance Design parameters, may have up to 6,000 feet of bridged tap and will have up to 1300 Ohms of resistance.

2.4.2.3 The long UCL-D (beyond 18,000 feet) is provisioned as a dry copper twisted pair longer than 18,000 feet and may have up to 12,000 feet of bridged tap and up to 2800 Ohms of resistance.

2.4.2.4 The UCL-D is a designed circuit, is provisioned with a test point, and comes standard with a DLR. OC is a chargeable option for a UCL-D; however, OC is always required on UCLs where a reuse of existing facilities has been requested by DPI.

2.4.2.5 These Loops are not intended to support any particular services and may be utilized by DPI to provide a wide-range of telecommunications services as long as those services do not adversely affect BellSouth's network. This facility will include a Network Interface Device (NID) at the customer's location for the purpose of connecting the Loop to the customer's inside wire.

2.4.2.6 BellSouth will make available the following UCL-Ds:

2.4.2.6.1 2-Wire UCL-D/short

2.4.2.6.2 2-Wire UCL-D/long

2.4.2.6.3 4-Wire UCL-D/short

2.4.2.6.4 4-Wire UCL-D/long

2.4.3 **Unbundled Copper Loop – Non-Designed (UCL-ND)**

2.4.3.1 The UCL–ND is provisioned as a dedicated 2-wire metallic transmission facility from BellSouth's Main Distribution Frame to a customer's premises (including the NID). The UCL-ND will be a "dry copper" facility in that it will not have any intervening equipment such as load coils, repeaters, or digital access main lines (DAMLs), and may have up to 6,000 feet of bridged tap between the end user's premises and the serving wire center. The UCL-ND typically will be 1300 Ohms resistance and in most cases will not exceed 18,000 feet in length, although the UCL-ND will not have a specific length limitation. For Loops less than 18,000 feet and with less than 1300 Ohms resistance, the Loop will provide a voice grade transmission channel suitable for Loop start signaling and the transport of analog

voice grade signals. The UCL-ND will not be designed and will not be provisioned with either a DLR or a test point.

2.4.3.2 The UCL-ND facilities may be mechanically assigned using BellSouth's assignment systems. Therefore, the Loop Make Up process is not required to order and provision the UCL-ND. However, DPI can request Loop Make Up for which additional charges would apply.

2.4.3.3 For an additional charge, BellSouth also will make available Loop Testing so that DPI may request further testing on the UCL-ND. Rates for Loop Testing are as set forth in Exhibit B of this Attachment.

2.4.3.4 UCL-ND Loops are not intended to support any particular service and may be utilized by DPI to provide a wide-range of telecommunications services as long as those services do not adversely affect BellSouth's network. The UCL-ND will include a Network Interface Device (NID) at the customer's location for the purpose of connecting the Loop to the customer's inside wire.

2.4.3.5 Order Coordination (OC) will be provided as a chargeable option and may be utilized when the UCL-ND provisioning is associated with the reuse of BellSouth facilities. Order Coordination -Time Specific (OC-TS) does not apply to this product.

2.4.3.6 DPI may use BellSouth's Unbundled Loop Modification (ULM) offering to remove bridge tap and/or load coils from any Loop within the BellSouth network. Therefore, some Loops that would not qualify as UCL-ND could be transformed into Loops that do qualify, using the ULM process.

2.5 **Unbundled Loop Modifications (Line Conditioning)**

2.5.1 Line Conditioning is defined as the removal from the Loop of any devices that may diminish the capability of the Loop to deliver high-speed switched wireline telecommunications capability, including xDSL service. Such devices include, but are not limited to, load coils, bridged taps, low pass filters, and range extenders.

2.5.2 BellSouth shall condition Loops, as requested by DPI, whether or not BellSouth offers advanced services to the End User on that Loop.

2.5.3 In some instances, DPI will require access to a copper twisted pair Loop unfettered by any intervening equipment (e.g., filters, load coils, range extenders, etc.), so that DPI can use the Loop for a variety of services by attaching appropriate terminal equipment at the ends. DPI will determine the type of service that will be provided over the Loop. BellSouth's Unbundled Loop Modifications (ULM) process will be used to determine the costs and feasibility of conditioning the Loops as requested. Rates for ULM are as set forth in Exhibit B of this Attachment.

2.5.4 In those cases where DPI has requested that BellSouth modify a Loop so that it no longer meets the technical parameters of the original Loop type (e.g., voice grade, ISDN, ADSL, etc.), the resulting modified Loop will be ordered and maintained as a UCL.

2.5.5 ULM includes the following: 1) removal of devices on 2-wire or 4-wire Loops equal to or less than 18,000 feet; 2) removal of devices on 2-wire or 4-wire Loops longer than 18,000 feet; and 3) removal of bridged-taps on Loops of any length.

2.5.6 DPI shall request Loop make up information pursuant to this Attachment prior to submitting a service inquiry and/or a LSR for the Loop type that DPI desires BellSouth to condition.

2.5.7 When requesting ULM for a Loop that BellSouth has previously provisioned for DPI, DPI will submit a service inquiry to BellSouth. If a spare Loop facility that meets the loop modification specifications requested by DPI is available at the location for which the ULM was requested, DPI will have the option to change the Loop facility to the qualifying spare facility rather than to provide ULM. In the event that BellSouth changes the Loop facility in lieu of providing ULM, DPI will not be charged for ULM but will only be charged the service order charges for submitting an order.

2.6 **Loop Provisioning Involving Integrated Digital Loop Carriers**

2.6.1 Where DPI has requested an Unbundled Loop and BellSouth uses Integrated Digital Loop Carrier (IDLC) systems to provide the local service to the end user and BellSouth has a suitable alternate facility available, BellSouth will make such alternative facilities available to DPI. If a suitable alternative facility is not available, then to the extent it is technically feasible, BellSouth will implement one of the following alternative arrangements for DPI (e.g. hairpinning):

1. Roll the circuit(s) from the IDLC to any spare copper that exists to the customer premises.
2. Roll the circuit(s) from the IDLC to an existing DLC that is not integrated.
3. If capacity exists, provide "side-door" porting through the switch.
4. If capacity exists, provide "DACS-door" porting (if the IDLC routes through a DACS prior to integration into the switch).

2.6.2 Arrangements 3 and 4 above require the use of a designed circuit. Therefore, non-designed Loops such as the SL1 voice grade and UCL-ND may not be ordered in these cases.

2.6.3 If no alternate facility is available, BellSouth will utilize its Special Construction (SC) process to determine the additional costs required to provision the Loop facilities. DPI will then have the option of paying the one-time SC rates to place the Loop.

2.7 **Network Interface Device (NID)**

2.7.1 The NID is defined as any means of interconnection of End User customer premises wiring to BellSouth's distribution plant, such as a cross-connect device used for that purpose. The NID is a single-line termination device or that portion of a multiple-line termination device required to terminate a single line or circuit at the premises. The NID features two independent chambers or divisions that separate the service provider's network from the end user's customer-premises wiring. Each chamber or division contains the appropriate connection points or posts to which the service provider and the end user each make their connections. The NID provides a protective ground connection and is capable of terminating cables such as twisted pair cable.

2.7.2 BellSouth shall permit DPI to connect DPI's Loop facilities to the End User's customer-premises wiring through the BellSouth NID or at any other technically feasible point.

2.7.3 **Access to NID**

2.7.3.1 DPI may access the end user's customer-premises wiring by any of the following means and DPI shall not disturb the existing form of electrical protection and shall maintain the physical integrity of the NID:

2.7.3.1.1 BellSouth shall allow DPI to connect its Loops directly to BellSouth's multi-line residential NID enclosures that have additional space and are not used by BellSouth or any other telecommunications carriers to provide service to the premises.

2.7.3.1.2 Where an adequate length of the end user's customer premises wiring is present and environmental conditions permit, either Party may remove the customer premises wiring from the other Party's NID and connect such wiring to that Party's own NID;

2.7.3.1.3 Either Party may enter the subscriber access chamber or dual chamber NID enclosures for the purpose of extending a connect divisioned or spliced jumper wire from the customer premises wiring through a suitable "punch-out" hole of such NID enclosures; or

2.7.3.1.4 DPI may request BellSouth to make other rearrangements to the end user customer premises wiring terminations or terminal enclosure on a time and materials cost basis.

2.7.3.2 In no case shall either Party remove or disconnect the other Party's Loop facilities from either Party's NIDs, enclosures, or protectors unless the applicable Commission has expressly permitted the same and the disconnecting Party provides prior notice to the other Party. In such cases, it shall be the responsibility of the Party disconnecting Loop facilities to leave undisturbed the existing form of

electrical protection and to maintain the physical integrity of the NID. It will be DPI's responsibility to ensure there is no safety hazard, and DPI will hold BellSouth harmless for any liability associated with the removal of the BellSouth Loop from the BellSouth NID. Furthermore, it shall be the responsibility of the disconnecting Party, once the other Party's Loop has been disconnected from the NID, to reconnect the disconnected Loop to a nationally recognized testing laboratory listed station protector, which has been grounded as per Article 800 of the National Electrical Code. If no spare station protector exists in the NID, the disconnected Loop must be appropriately cleared, capped and stored.

2.7.3.3 DPI shall not remove or disconnect ground wires from BellSouth's NIDs, enclosures, or protectors.

2.7.3.4 DPI shall not remove or disconnect NID modules, protectors, or terminals from BellSouth's NID enclosures.

2.7.3.5 Due to the wide variety of NID enclosures and outside plant environments, BellSouth will work with DPI to develop specific procedures to establish the most effective means of implementing this section if the procedures set forth herein do not apply to the NID in question.

2.7.4 Technical Requirements

2.7.4.1 The NID shall provide an accessible point of interconnection and shall maintain a connection to ground.

2.7.4.2 If an existing NID is accessed, it shall be capable of transferring electrical analog or digital signals between the end user's customer premises and the distribution media and/or cross connect to DPI's NID.

2.7.4.3 Existing BellSouth NIDs will be provided in "as is" condition. DPI may request BellSouth to do additional work to the NID on a time and material basis. When DPI deploys its own local Loops in a multiple-line termination device, DPI shall specify the quantity of NIDs connections that it requires within such device.

2.8 **Sub-loop Elements**

2.8.1 Where facilities permit, BellSouth shall offer access to its Unbundled Sub-Loop (USL) and Unbundled Sub-loop Concentration (USLC) System.

2.8.2 **Unbundled Sub-Loop Distribution**

2.8.2.1 The unbundled sub-loop distribution facility is a dedicated transmission facility that BellSouth provides from an end user's point of demarcation to a BellSouth cross-connect device. The BellSouth cross-connect device may be located within a remote terminal (RT) or a stand-alone cross-box in the field or in the equipment room of a building. The unbundled sub-loop distribution media is a copper twisted

pair that can be provisioned as a 2-Wire or 4-Wire facility. BellSouth will make available the following sub-loop distribution offerings where facilities exist:

Unbundled Sub-Loop Distribution – Voice Grade
Unbundled Copper Sub-Loop
Unbundled Sub-Loop Distribution – Intrabuilding Network Cable (aka riser cable)

2.8.2.2 Unbundled Sub-Loop Distribution – Voice Grade (USLD-VG) is a sub-loop facility from the cross-box in the field up to and including the point of demarcation at the end user's premises and may have load coils.

2.8.2.3 Unbundled Copper Sub-Loop (UCSL) is a copper facility of any length provided from the cross-box in the field up to and including the End User's point of demarcation. If available, this facility will not have any intervening equipment such as load coils between the End User and the cross-box.

2.8.2.4 If DPI requests a UCSL and it is not available, DPI may request the Sub-Loop facility be modified pursuant to the ULM process to remove load coils and/or bridged taps. If load coils and/or bridged taps are removed, the facility will be classified as a UCSL.

2.8.2.5 Unbundled Sub-Loop Distribution – Intrabuilding Network Cable (USLD-INC) is the distribution facility inside a building or between buildings on the same property that is not separated by a public street or road. USLD-INC includes the facility from the cross-connect device in the building equipment room up to and including the point of demarcation at the end user's premises.

2.8.2.6 BellSouth will install a cross connect panel in the building equipment room for the purpose of accessing USLD-INC pairs from a building equipment room. The cross-connect panel will function as a single point of interconnection (SPOI) for USLD-INC and will be accessible by multiple carriers as space permits. BellSouth will place cross-connect blocks in 25-pair increments for DPI's use on this cross-connect panel. DPI will be responsible for connecting its facilities to the 25-pair cross-connect block(s).

2.8.2.7 For access to Voice Grade USLD and UCSL, DPI shall install a cable to the BellSouth cross-box pursuant to the terms and conditions for physical collocation for remote sites set forth in this Agreement. This cable would be connected by a BellSouth technician within the BellSouth cross-box during the set-up process. DPI's cable pairs can then be connected to BellSouth's USL within the BellSouth cross-box by the BellSouth technician.

2.8.2.8 Through the Service Inquiry (SI) process, BellSouth will determine whether access to Unbundled Sub-Loops at the location requested by DPI is technically feasible and whether sufficient capacity exists in the cross-box. If existing capacity is sufficient to meet DPI's request, then BellSouth will perform the site set-up as

described in the CLEC Information Package, located at the Website address: http://www.interconnection.bellsouth.com/products/html/unes.html. If any work must be done to modify existing BellSouth facilities or add new facilities (other than adding the cross-connect panel in a building equipment room to accommodate DPI's request for Unbundled Sub-Loops, DPI may request BellSouth's Special Construction (SC) process to determine additional costs required to provision the Unbundled Sub-Loops. DPI will have the option to proceed under the SC process to modify the BellSouth facilities.

2.8.2.9 The site set-up must be completed before DPI can order sub-loop pairs. For the site set-up in a BellSouth cross-connect box in the field, BellSouth will perform the necessary work to splice DPI's cable into the cross-connect box. For the site set-up inside a building equipment room, BellSouth will perform the necessary work to install the cross-connect panel and the connecting block(s) that will be used to provide access to the requested USLs.

2.8.2.10 Once the site set-up is complete, DPI will request sub-loop pairs through submission of a Local Service Request (LSR) form to the Local Carrier Service Center (LCSC). Order Coordination is required with USL pair provisioning when DPI requests reuse of an existing facility, and the Order Coordination charge shall be billed in addition to the USL pair rate. For expedite requests by DPI for sub-loop pairs, expedite charges will apply for intervals less than 5 days.

2.8.2.11 Unbundled Sub-Loops will be provided in accordance with technical reference TR73600.

2.8.3 **Unbundled Network Terminating Wire (UNTW)**

2.8.3.1 Unbundled Network Terminating Wire (UNTW) is unshielded twisted copper wiring that is used to extend circuits from an intra-building network cable terminal or from a building entrance terminal to an individual end user's point of demarcation. It is the final portion of the Loop that in multi-subscriber configurations represents the point at which the network branches out to serve individual subscribers.

2.8.3.2 This element will be provided in Multi-Dwelling Units (MDUs) and/or Multi-Tenants Units (MTUs) where either Party owns wiring all the way to the End User's premises. Neither Party will provide this element in locations where the property owner provides its own wiring to the End User's premises, where a third party owns the wiring to the End User's premises or where the property owner will not allow the other Party to place its facilities to the end user.

2.8.3.3 Requirements

2.8.3.3.1 On a multi-unit premises, upon request of the other Party (Requesting Party), the Party owning the network terminating wire (Provisioning Party) will provide

access to UNTW pairs on an Access Terminal that is suitable for use by multiple carriers at each Garden Terminal or Wiring Closet.

2.8.3.3.2 The Provisioning Party shall not be required to install new or additional NTW beyond existing NTW to provision the services of the Requesting Party.

2.8.3.3.3 In existing MDUs and/or MTUs in which BellSouth does not own or control wiring (INC/NTW) to the end users premises, DPI will install UNTW Access Terminals for BellSouth at no additional charge.

2.8.3.3.4 In situations in which BellSouth activates a UNTW pair, BellSouth will compensate DPI for each pair activated commensurate to the price specified in DPI's Agreement.

2.8.3.3.5 Upon receipt of the UNTW Service Inquiry (SI) requesting access to the Provisioning Party's UNTW pairs at a multi-unit premises, representatives of both Parties will participate in a meeting at the site of the requested access. The purpose of the site visit will include discussion of the procedures for installation and location of the Access Terminals. By request of the Requesting Party, an Access Terminal will be installed either adjacent to each of the Provisioning Party's Garden Terminal or inside each Wiring Closet. The Requesting Party will deliver and connect its central office facilities to the UNTW pairs within the Access Terminal. The Requesting Party may access any available pair on an Access Terminal. A pair is available when a pair is not being utilized to provide service or where the end user has requested a change in its local service provider to the Requesting Party. Prior to connecting the Requesting Party's service on a pair previously used by the Provisioning Party, the Requesting Party is responsible for ensuring the End User is no longer using the Provisioning Party's service or another CLEC's service before accessing UNTW pairs.

2.8.3.3.6 Access Terminal installation intervals will be established on an individual case basis.

2.8.3.3.7 The Requesting Party is responsible for obtaining the property owner's permission for the Provisioning Party to install an Access Terminal(s) on behalf of the Requesting Party. The submission of the SI by the Requesting Party will serve as certification by the Requesting Party that such permission has been obtained. If the property owner objects to Access Terminal installations that are in progress or subsequent to completion and demands removal of Access Terminals, the Requesting Party will be responsible for costs associated with removing Access Terminals and restoring the property to its original state prior to Access Terminals being installed.

2.8.3.3.8 The Requesting Party shall indemnify and hold harmless the Provisioning Party against any claims of any kind that may arise out of the Requesting Party's failure to obtain the property owner's permission. The Requesting Party will be billed for

nonrecurring and recurring charges for accessing UNTW pairs at the time the Requesting Party activates the pair(s). The Requesting Party will notify the Provisioning Party each time it activates UNTW pairs using the LSR form.

2.8.3.3.9 The Requesting Party will isolate and report troubles in the manner specified by the Provisioning Party. The Requesting Party must tag the UNTW pair that requires repair. If the Provisioning Party dispatches a technician on a reported trouble call and no UNTW trouble is found, the Provisioning Party will charge Requesting Party for time spent on the dispatch and testing the UNTW pair(s).

2.8.3.3.10 If the Requesting Party initiates the Access Terminal installation and the Requesting Party has not activated at least one pair on the Access Terminal installed pursuant to the Requesting Party's request for an Access Terminal within 6 months of installation of the Access Terminal, the Provisioning Party will bill the Requesting Party a nonrecurring charge equal to the actual cost of provisioning the Access Terminal.

2.8.3.3.11 If the Provisioning Party determines that the Requesting Party is using the UNTW pairs without reporting the activation of the pairs, the following charges shall apply:

2.8.3.3.11.1 If the Requesting Party issued a LSR to disconnect an End User from the Provisioning Party in order to use a UNTW pair, the Requesting Party will be billed for the use of the pair back to the disconnect order date.

2.8.3.3.11.2 If the Requesting Party activated a UNTW pair on which the Provisioning Party was not previously providing service, the Requesting Party will be billed for the use of that pair back to the date the End User began receiving service using that pair. Upon request, the Requesting Party will provide copies of its billing record to substantiate such date. If the Requesting Party fails to provide such records, then the Provisioning Party will bill the Requesting Party back to the date of the Access Terminal installation.

2.8.4 **Unbundled Sub-Loop Feeder**

2.8.4.1 Unbundled Sub-Loop Feeder (USLF) provides connectivity between BellSouth's central office and cross-box (or other access point) that serves one or more end user locations.

2.8.4.2 USLF utilized for voice traffic can be configured as 2-wire voice (USLF-2W/V) or 4-wire voice (USLF-4W/V).

2.8.4.3 USLF utilized for digital traffic can be configured as 2-wire ISDN (USLF-2W/I); 2-wire Copper (USLF-2W/C); 4-wire Copper (USLF-4W/C); 4-wire DS0 level Loop (USLF-4W/D0); or 4-wire DS1 and ISDN (USLF-4W/DI).

2.8.4.4 USLF will provide access to both the equipment and the features in the BellSouth central office and BellSouth cross box necessary to provide a 2-wire or 4-wire communications pathway from the BellSouth central office to the BellSouth cross-box. This element will allow for the connection of DPI's loop distribution elements onto BellSouth's feeder system.

2.8.4.5 Requirements

2.8.4.5.1 DPI will extend a compatible cable to BellSouth's cross-box. BellSouth will connect the cable to a cross-connect panel inside the BellSouth cross-box to the requested level of feeder element. In those cases in which there is no room in the BellSouth cross-box to accommodate the additional cross-connect panels mentioned above, DPI may request, through the BellSouth Special Construction process, a determination of costs to provide the sub-loop feeder element to DPI. DPI will then have the option of paying the special construction charges or canceling the order.

2.8.4.5.2 USLF will be a designed circuit and BellSouth will provide a Design Layout Record (DLR) for this element.

2.8.4.5.3 BellSouth will provide USLF elements in accordance with applicable industry standards for these types of facilities. Where industry standards do not exist, BellSouth's TR73600 will be used to determine performance parameters.

2.8.4.6 Unbundled Sub-Loop Feeder – DS3 and above

2.8.4.6.1 USLF DS3 and above provides connectivity between a BellSouth Serving Wire Center (SWC) collocation arrangement and the Remote Terminal (RT) associated with the SWC that serves an end user location.

2.8.4.6.2 The sub-loop feeder shall be utilized for voice and digital traffic. It may be configured at DS3 or STS-1 transmission capacities and shall require a Service Inquiry.

2.8.4.7 Requirements

2.8.4.7.1 Access in the SWC and RT will be via a Collocation cross-connect.

2.8.4.7.2 USLF DS3 and above will be a designed circuit. BellSouth will provide a Design Layout Record (DLR) for this network element.

2.8.4.7.3 Rates. Rates for these services are as set forth in Exhibit B of this Attachment. Mileage is based on airline miles.

2.8.4.7.4 BellSouth will provide USLF DS3 and above elements in accordance with applicable industry standards.

2.8.5 **Unbundled Loop Concentration (ULC)**

2.8.5.1 BellSouth will provide to DPI Unbundled Loop Concentration (ULC). Loop concentration systems in the central office concentrate the signals transmitted over local Loops onto a digital loop carrier system. The concentration device is placed inside a BellSouth central office. BellSouth will offer ULC with a TR008 interface or a TR303 interface.

2.8.5.2 ULC will be offered in two system options. System A will allow up to 96 BellSouth Loops to be concentrated onto two or more DS1s. The high-speed connection from the concentrator will be at the electrical DS1 level and will connect to DPI at DPI's collocation site. System B will allow up to 192 BellSouth Loops to be concentrated onto 4 or more DS1s. System A may be upgraded to a System B. A minimum of two DS1s is required for each system (i.e., System A requires two DS1s and System B would require an additional two DS1s or four in total). All DS1 interfaces will terminate to DPI's collocation space. ULC service is offered with concentration (2 DS1s for 96 channels) or without concentration (4 DS1s for 96 channels) and with or without protection. A Loop Interface element will be required for each Loop that is terminated onto the ULC system.

2.8.6 **Unbundled Sub-Loop Concentration (USLC)**

2.8.6.1 Where facilities permit, DPI may concentrate its sub-loops onto multiple DS1s back to the BellSouth Central Office.

2.8.6.2 USLC, using the Lucent Series 5 equipment, will be offered in two system options. System A will allow up to 96 of DPI's sub-loops to be concentrated onto two or more DS1s. System B will allow an additional 96 of DPI's sub-loops to be concentrated onto two or more additional DS1s. One System A may be supplemented with one System B and they both must be physically located in a single Series 5 dual channel bank. A minimum of two DS1s is required for each system (i.e., System A requires two DS1s and System B would require an additional two DS1s or four in total). The DS1 level facility that connects the Remote Terminal site with the serving wire center is known as a Feeder Interface. All DS1 Feeder Interfaces will terminate to DPI's demarcation point associated with DPI's collocation space within the SWC that serves the remote terminal (RT). USLC service is offered with or without concentration and with or without a protection DS1.

2.8.6.3 DPI is required to deliver its sub-loops to its own cross-box, RT, or other similar device and deliver a single cable to the BellSouth RT. This cable shall be connected by a BellSouth technician to a cross-connect panel within the BellSouth RT/cross-box and shall allow DPI's sub-loops to be placed on the USLC and transported to DPI's collocation space at a DS1 level.

2.8.7 **Dark Fiber Loop**

2.8.7.1 Dark Fiber Loop is an unused optical transmission facility, without attached signal regeneration, multiplexing, aggregation or other electronics, from an end user's premises connected via a cross connect to the demarcation point associated with DPI's collocation space in the end user's serving wire center. Dark Fiber Loops may be strands of optical fiber existing in aerial or underground structure. BellSouth will not provide line terminating elements, regeneration or other electronics necessary for DPI to utilize Dark Fiber Loops.

2.8.7.2 Requirements

2.8.7.2.1 BellSouth shall make available Dark Fiber Loop where it exists in BellSouth's network and where, as a result of future building or deployment, it becomes available. Dark Fiber Loop will not be deemed available if: (1) it is used by BellSouth for maintenance and repair purposes; (2) it is designated for use pursuant to a firm order placed by another customer; (3) it is restricted for use by all carriers, including BellSouth, because of transmission problems or because it is scheduled for removal due to documented changes to roads and infrastructure; or (4) BellSouth has plans to use the fiber within a two-year planning period. BellSouth is not required to place the fiber for Dark Fiber Loop if none is available.

2.8.7.2.2 DPI is solely responsible for testing the quality of the Dark Fiber to determine its usability and performance specifications.

2.8.7.2.3 BellSouth shall use its commercially reasonable efforts to provide to DPI information regarding the location, availability and performance of Dark Fiber Loop within ten (10) business days after receiving a Service Inquiry (SI) from DPI.

2.8.7.2.4 If the requested Dark Fiber Loop is available, BellSouth shall use commercially reasonable efforts to provision the Dark Fiber Loop to DPI within twenty (20) business days after DPI submits a valid, error free LSR. Provisioning includes identification of appropriate connection points (e.g., Light Guide Interconnection (LGX)) to enable DPI to connect DPI provided transmission media (e.g., optical fiber) or equipment to the Dark Fiber Loop.

2.9 **Loop Makeup (LMU)**

2.9.1 Description of Service

2.9.1.1 BellSouth shall make available to DPI LMU information so that DPI can make an independent judgment about whether the Loop is capable of supporting the advanced services equipment DPI intends to install and the services DPI wishes to provide. This section addresses LMU as a preordering transaction, distinct from DPI ordering any other service(s). Loop Makeup Service Inquiries (LMUSI) for preordering Loop Make-Up are likewise unique from other preordering functions with associated service inquiries (SI) as described in this Agreement.

2.9.1.2 BellSouth will provide DPI LMU information consisting of the composition of the Loop material (copper/fiber); the existence, location and type of equipment on the Loop, including but not limited to digital loop carrier or other remote concentration devices, feeder/distribution interfaces, bridged taps, load coils, pair-gain devices; the Loop length; the wire gauge and electrical parameters.

2.9.1.3 BellSouth's LMU information is provided to DPI as it exists either in BellSouth's databases or in its hard copy facility records. BellSouth does not guarantee accuracy or reliability of the LMU information provided.

2.9.1.4 BellSouth's provisioning of LMU information to the requesting CLEC on facilities is contingent upon either BellSouth or the requesting CLEC controlling the Loop(s) that serve the service location for which LMU information has been requested by the CLEC. The requesting CLEC is not authorized to receive LMU information on a facility used or controlled by another CLEC unless BellSouth receives a Letter of Authorization (LOA) from the voice CLEC (owner) or its authorized agent on the LMUSI (Loop Makeup Service Inquiry) submitted by the requesting CLEC.

2.9.1.5 DPI may choose to use equipment that it deems will enable it to provide a certain type and level of service over a particular BellSouth Loop as long as that equipment does not disrupt other services on the BellSouth network. The determination shall be made solely by DPI and BellSouth shall not be liable in any way for the performance of the advanced data services provisioned over said Loop. The specific Loop type (ADSL, HDSL, or otherwise) ordered on the LSR must match the LMU of the Loop reserved taking into consideration any requisite line conditioning. The LMU data is provided for informational purposes only and does not guarantee DPI's ability to provide advanced data services over the ordered Loop type. Further, if DPI orders Loops that do not require a specific facility medium (i.e. copper only) or Loops that are not intended to support advanced services (such as UV-SL1, UV-SL2, or ISDN compatible Loops) and that are not inventoried as advanced services Loops, the LMU information for such Loops is subject to change at any time due to modifications and/or upgrades to BellSouth's network. DPI is fully responsible for any of its service configurations that may differ from BellSouth's technical standard for the Loop type ordered.

2.9.2 **Submitting Loop Makeup Service Inquiries**

2.9.2.1 DPI may obtain LMU information by submitting a LMU Service Inquiry (LMUSI) mechanically or manually. Mechanized LMUSIs should be submitted through BellSouth's Operational Support Systems interfaces. After obtaining the Loop information from the mechanized LMUSI process, if DPI needs further Loop information in order to determine Loop service capability, DPI may initiate a separate Manual Service Inquiry for a separate nonrecurring charge as set forth in Exhibit B of this Attachment.

2.9.2.2 Manual LMUSIs shall be submitted by electronic mail to BellSouth's Complex Resale Support Group (CRSG) utilizing the Preordering Loop Makeup Service Inquiry form. The service interval for the return of a Loop Makeup Manual Service Inquiry is three business days. Manual LMUSIs are not subject to expedite requests. This service interval is distinct from the interval applied to the subsequent service order.

2.9.3 **Loop Reservations**

2.9.3.1 For a Mechanized LMUSI, DPI may reserve up to ten Loop facilities. For a Manual LMUSI, DPI may reserve up to three Loop facilities.

2.9.3.2 DPI may reserve facilities for up to four (4) business days for each facility requested on a LMUSI from the time the LMU information is returned to DPI. During and prior to DPI placing an LSR, the reserved facilities are rendered unavailable to other customers, including BellSouth. If DPI does not submit an LSR for a UNE service on a reserved facility within the four-day reservation timeframe, the reservation of that spare facility will become invalid and the facility will be released.

2.9.3.3 Charges for preordering LMUSI are separate from any charges associated with ordering other services from BellSouth.

2.9.4 **Ordering of Other UNE Services**

2.9.4.1 All LSRs issued for reserved facilities shall reference the facility reservation number as provided by BellSouth. DPI will not be billed any additional LMU charges for the Loop ordered on such LSR. If, however, DPI does not reserve facilities upon an initial LMUSI, DPI's placement of an order for an advanced data service type facility will incur the appropriate billing charges to include service inquiry and reservation per Exhibit B of this Attachment.

2.9.4.2 Where DPI has reserved multiple Loop facilities on a single reservation, DPI may not specify which facility shall be provisioned when submitting the LSR. For those occasions, BellSouth will assign to DPI, subject to availability, a facility that meets the BellSouth technical standards of the BellSouth type Loop as ordered by DPI. If the ordered Loop type is not available, DPI may utilize the Unbundled Loop Modification process or the Special Construction process, as applicable, to obtain the Loop type ordered.

3 High Frequency Spectrum Network Element

3.1 General

3.1.1 BellSouth shall provide DPI access to the high frequency spectrum of the local Loop as an unbundled network element only where BellSouth is the voice service provider to the end user at the rates set forth in this Attachment.

3.1.2 The High Frequency Spectrum is defined as the frequency range above the voiceband on a copper Loop facility carrying analog circuit-switched voiceband transmissions. Access to the High Frequency Spectrum is intended to allow DPI the ability to provide Digital Subscriber Line (xDSL) data services to the end user for which BellSouth provides voice services. The High Frequency Spectrum shall be available for any version of xDSL complying with Spectrum Management Class 5 of ANSI T1.417, American National Standard for Telecommunications, Spectrum Management for Loop Transmission Systems. BellSouth will continue to have access to the low frequency portion of the Loop spectrum (from 300 Hertz to at least 3000 Hertz, and potentially up to 3400 Hertz, depending on equipment and facilities) for the purposes of providing voice service. DPI shall only use xDSL technology that is within the PSD mask for Spectrum Management Class 5 as found in the above-mentioned document.

3.1.3 Access to the High Frequency Spectrum requires an unloaded, 2-wire copper Loop. An unloaded Loop is a copper Loop with no load coils, low-pass filters, range extenders, DAMLs, or similar devices and minimal bridged taps consistent with ANSI T1.413 and T1.601.

3.1.4 BellSouth will provide Loop Modification to DPI on an existing Loop in accordance with procedures developed in the Line Sharing Collaborative. High Frequency Spectrum (Central Office Based) Unbundled Loop Modification is a separate distinct service from Unbundled Loop Modification set forth in Section 2.5 of this Attachment. Procedures for High Frequency Spectrum (Central Office Based) Unbundled Loop Modification were developed in the Line Sharing Collaborative and may be found posted to the web at http://www.interconnection.bellsouth.com/html/unes.html. Nonrecurring rates for this UNE offering are as set forth in Exhibit B of this Attachment. BellSouth is not required to modify a Loop for access to the High Frequency spectrum if modification of that Loop significantly degrades BellSouth's voice service. If DPI requests that BellSouth modify a Loop longer than 18,000 ft. and such modification significantly degrades the voice services on the Loop, DPI shall pay for the Loop to be restored to its original state.

3.1.5 The High Frequency Spectrum shall only be available on Loops on which BellSouth is also providing, and continues to provide, analog voice service directly to the end user. In the event the End User terminates its BellSouth provided voice service for any reason, or in the event BellSouth disconnects the end user's voice service pursuant to its tariffs or applicable law, and DPI desires to continue providing xDSL service on such Loop, DPI shall be required to purchase a full stand-alone Loop unbundled network element. To the extent commercially practicable, BellSouth shall give DPI notice in a reasonable time prior to disconnect, which notice shall give DPI an adequate opportunity to notify BellSouth of its intent to purchase such Loop. In those cases in which BellSouth no longer provides voice service to the end user and DPI purchases the full stand-alone Loop, DPI may elect the type of Loop it will purchase. DPI will pay the

appropriate recurring and nonrecurring rates for such Loop as set forth in Exhibit B to this Attachment. In the event DPI purchases a voice grade Loop, DPI acknowledges that such Loop may not remain xDSL compatible.

3.1.6 Only one competitive local exchange carrier (CLEC) shall be permitted access to the High Frequency Spectrum of any particular Loop.

3.2 **Provisioning of High Frequency Spectrum and Splitter Space**

3.2.1 BellSouth will provide DPI with access to the High Frequency Spectrum as follows:

3.2.1.1 To order High Frequency Spectrum on a particular Loop, DPI must have a Digital Subscriber Line Access Multiplexer (DSLAM) collocated in the central office that serves the End User of such Loop.

3.2.1.2 DPI may provide its own splitters or may order splitters in a central office once it has installed its DSLAM in that central office. BellSouth will install splitters within thirty-six (36) calendar days of DPI's submission of an error free Line Splitter Ordering Document (LSOD) to the BellSouth Complex Resale Support Group.

3.2.1.3 Once a splitter is installed on behalf of DPI in a central office in which DPI is located, DPI shall be entitled to order the High Frequency Spectrum on lines served out of that central office. BellSouth will bill and DPI shall pay the electronic or manual ordering charges as applicable when DPI orders High Frequency Spectrum for End User service.

3.2.1.4 BellSouth shall test the data portion of the Loop to ensure the continuity of the wiring for DPI's data.

3.3 **BellSouth Provided Splitter**

3.3.1 BellSouth will select, purchase, install, and maintain a central office POTS splitter and provide DPI access to data ports on the splitter. The splitter will route the High Frequency Spectrum on the circuit to DPI's xDSL equipment in DPI's collocation space. At least 30 days before making a change in splitter suppliers, BellSouth will provide DPI with a carrier notification letter, informing DPI of change. DPI shall purchase ports on the splitter in increments of 8, 24, or 96 ports in Alabama, Florida, Georgia, Kentucky, Louisiana, Mississippi, North Carolina and South Carolina. DPI shall purchase ports on the splitter in increments of 24 or 96 ports in Tennessee.

3.3.2 BellSouth will install the splitter in (i) a common area close to DPI's collocation area, if possible; or (ii) in a BellSouth relay rack as close to DPI's DS0 termination point as possible. DPI shall have access to the splitter for test purposes, regardless of where the splitter is placed in the BellSouth premises. For purposes of this

section, a common area is defined as an area in the central office in which both Parties have access to a common test access point. A Termination Point is defined as the point of termination for DPI on the main distributing frame in the central office and is not the demarcation point set forth in Attachment 4 of this Agreement. BellSouth will cross-connect the splitter data ports to a specified DPI DS0 at such time that a DPI end user's service is established.

3.4 **CLEC Provided Splitter**

3.4.1 DPI may at its option purchase, install and maintain central office POTS splitters in its collocation arrangements. DPI may use such splitters for access to its customers and to provide digital line subscriber services to its customers using the High Frequency Spectrum. Existing Collocation rules and procedures and the terms and conditions relating to Collocation set forth in Attachment 4-Central Office shall apply.

3.4.2 Any splitters installed by DPI in its collocation arrangement shall comply with ANSI T1.413, Annex E, or any future ANSI splitter Standards. DPI may install any splitters that BellSouth deploys or permits to be deployed for itself or any BellSouth affiliate.

3.5 **Ordering**

3.5.1 DPI shall use BellSouth's Line Splitter Ordering Document (LSOD) to order splitters from BellSouth and to activate and deactivate DS0 Collocation Connecting Facility Assignments (CFA) for use with High Frequency Spectrum.

3.5.2 BellSouth will provide DPI the Local Service Request (LSR) format to be used when ordering the High Frequency Spectrum.

3.5.3 BellSouth will provision High Frequency Spectrum in compliance with BellSouth's Products and Services Interval Guide available at the website at http://www.interconnection.bellsouth.com.

3.5.4 BellSouth will provide DPI access to Preordering Loop Makeup (LMU) in accordance with the terms of this Agreement. BellSouth shall bill and DPI shall pay the rates for such services, as described in Exhibit B.

3.6 **Maintenance and Repair**

3.6.1 DPI shall have access for repair and maintenance purposes to any Loop for which it has access to the High Frequency Spectrum. If DPI is using a BellSouth owned splitter, DPI may access the Loop at the point where the combined voice and data signal exits the central office splitter via a bantam test jack. If DPI provides its own splitter, it may test from the collocation space or the Termination Point.

3.6.2 BellSouth will be responsible for repairing voice services and the physical line between the network interface device at the customer's premises and the Termination Point. DPI will be responsible for repairing data services. Each Party will be responsible for maintaining its own equipment.

3.6.3 DPI shall inform its end users to direct data problems to DPI, unless both voice and data services are impaired, in which event the end users should call BellSouth.

3.6.4 Once a Party has isolated a trouble to the other Party's portion of the Loop, the Party isolating the trouble shall notify the end user that the trouble is on the other Party's portion of the Loop.

3.6.5 Notwithstanding anything else to the contrary in this Agreement, when BellSouth receives a voice trouble and isolates the trouble to the physical collocation arrangement belonging to DPI, BellSouth will notify DPI. DPI will provide at least one but no more than two (2) verbal connecting facility assignments (CFA) pair changes to BellSouth in an attempt to resolve the voice trouble. In the event a CFA pair change resolves the voice trouble, DPI will provide BellSouth an LSR with the new CFA pair information within 24 hours. If the owner of the collocation space fails to resolve the trouble by providing BellSouth with the verbal CFA pair changes, BellSouth may discontinue DPI's access to the High Frequency Spectrum on such Loop. BellSouth will not be responsible for any loss of data as a result of this action.

3.7 **Line Splitting**

3.7.1 General

3.7.2 Line splitting allows a provider of data services (a "Data LEC") and a provider of voice services (a "Voice CLEC") to deliver voice and data service to End Users over the same Loop. The Voice CLEC and Data LEC may be the same or different carriers. DPI shall provide BellSouth with a signed Letter of Authorization (LOA) between it and the Data LEC or Voice CLEC with which it desires to provision Line Splitting services, if DPI will not provide voice and data services.

3.7.3 End Users currently receiving voice service from a Voice CLEC through a UNE platform (UNE-P) may be converted to Line Splitting arrangements by DPI or its authorized agent ordering Line Splitting Service. If the CLEC wishes to provide the splitter, the UNE-P arrangement will be converted to a stand-alone UNE Loop, a UNE port, two collocation cross connects and the high frequency spectrum line activation. If BellSouth owns the splitter, the UNE-P arrangement will be converted to a stand-alone UNE Loop, port, and one collocation cross connection.

3.7.4 When end users on Loops using High Frequency Spectrum CO Based line sharing service are converted to Line Splitting, BellSouth will discontinue billing DPI for the High Frequency Spectrum. BellSouth will continue to bill the Data LEC for all associated splitter charges if the Data LEC continues to use a BellSouth splitter. It is the responsibility of DPI or its authorized agent to determine if the Loop is compatible for Line Splitting Service. DPI or its authorized agent may use the existing Loop unless it is not compatible with the Data LEC's data service and DPI or its authorized agent submits an LSR to BellSouth to change the Loop.

3.8 **Provisioning Line Splitting and Splitter Space**

3.8.1 The Data LEC, Voice CLEC or BellSouth may provide the splitter. When DPI or its authorized agent owns the splitter, Line Splitting requires the following: a non-designed analog Loop from the serving wire center to the network interface device (NID) at the end user's location; a collocation cross connection connecting the Loop to the collocation space; a second collocation cross connection from the collocation space connected to a voice port; the high frequency spectrum line activation, and a splitter. The Loop and port cannot be a Loop and port combination (i.e. UNE-P), but must be individual stand-alone network elements. When BellSouth owns the splitter, Line Splitting requires the following: a non designed analog Loop from the serving wire center to the network interface device (NID) at the end user's location with CFA and splitter port assignments, and a collocation cross connection from the collocation space connected to a voice port.

3.8.2 An unloaded 2-wire copper Loop must serve the end user. The meet point for the Voice CLEC and the Data LEC is the point of termination on the MDF for the Data LEC's cable and pairs.

3.8.3 The foregoing procedures are applicable to migration to Line Splitting Service from a UNE-P arrangement, BellSouth Retail Voice Service, BellSouth High Frequency Spectrum (CO Based) Line Sharing.

3.8.4 For other migration scenarios to line splitting, BellSouth will work cooperatively with CLECs to develop methods and procedures to develop a process whereby a Voice CLEC and a Data LEC may provide services over the same Loop.

3.9 Ordering

3.9.1 DPI shall use BellSouth's Line Splitter Ordering Document (LSOD) to order splitters from BellSouth and to activate and deactivate DS0 Collocation Connecting Facility Assignments (CFA) for use with Line Splitting.

3.9.2 BellSouth shall provide DPI the Local Service Request (LSR) format to be used when ordering Line Splitting service.

3.9.3 BellSouth will provision Line Splitting service in compliance with BellSouth's Products and Services Interval Guide available at the website at http://www.interconnection.bellsouth.com.

3.9.4 BellSouth will provide DPI access to Preordering Loop Makeup (LMU) in accordance with the terms of this Agreement. BellSouth shall bill and DPI shall pay the rates for such services as described in Exhibit B.

3.9.5 BellSouth will provide Loop modification to DPI on an existing Loop in accordance with procedures developed in the Line Sharing Collaborative. High Frequency Spectrum (CO Based) Unbundled Loop Modification is a separate distinct service from Unbundled Loop Modification set forth in Section 2.5 of this Attachment. Procedures for High Frequency Spectrum (CO Based) Unbundled Loop Modification may be found on the web at: HTTP://www.interconnection.bellsouth.com/html/unes.html. Nonrecurring rates for this UNE offering are as set forth in Exhibit B of this Attachment.

3.10 Maintenance

3.10.1 BellSouth will be responsible for repairing voice services and the physical line between the network interface device at the customer's premises and the Termination Point. DPI will be responsible for repairing data services. Each Party will be responsible for maintaining its own equipment.

3.10.2 DPI shall inform its end users to direct data problems to DPI, unless both voice and data services are impaired, in which event the end users should call BellSouth.

3.10.3 Once a Party has isolated a trouble to the other Party's portion of the Loop, the Party isolating the trouble shall notify the end user that the trouble is on the other Party's portion of the Loop.

3.10.4 When BellSouth receives a voice trouble and isolates the trouble to the physical collocation arrangement belonging to owner of the collocation space, BellSouth will notify the owner of the collocation space. The owner of the collocation space will provide at least one but no more than two (2) verbal CFA pair changes to BellSouth in an attempt to resolve the voice trouble. In the event the CFA pair is changed, the owner of the collocation space will provide BellSouth an LSR with the new CFA pair information within 24 hours. If the owner of the collocation space fails to resolve the trouble by providing BellSouth with the verbal CFA pair changes, BellSouth may discontinue the owner of the collocation space access to the High Frequency Spectrum on such Loop.

3.10.5 If DPI is not the data provider, DPI shall indemnify, defend and hold harmless BellSouth from and against any claims, losses, actions, causes of action, suits, demands, damages, injury, and costs including reasonable attorney fees, which arise out of actions related to the data provider.

3.11 Remote Site High Frequency Spectrum

3.11.1 General

3.11.2 BellSouth shall provide DPI access to the high frequency spectrum of the local sub-loop as an unbundled network element (UNE) only where BellSouth is the voice service provider to the end user at the rates set forth in this Attachment.

3.11.3 The High Frequency Spectrum is defined as the frequency range above the voiceband on a copper sub-loop facility carrying analog circuit-switched voiceband transmissions. Access to the High Frequency Spectrum is intended to allow DPI the ability to provide Digital Subscriber Line (xDSL) data services to the end user for whom BellSouth provides voice services. The High Frequency Spectrum shall be available for any version of xDSL complying with Spectrum Management Class 5 of ANSI T1.417, American National Standard for Telecommunications, Spectrum Management for Loop Transmission Systems. BellSouth will continue to have access to the low frequency portion of the sub-loop spectrum (from 300 Hertz to at least 3000 Hertz, and potentially up to 3400 Hertz, depending on equipment and facilities) for the purposes of providing voice service. DPI shall only use xDSL technology that is within the PSD mask for Spectrum Management Class 5 as found in the above-mentioned document.

3.11.4 Access to the High Frequency Spectrum requires an unloaded, 2-wire (Non-Designed) copper sub-loop. An unloaded copper sub-loop has no load coils, low-pass filters, range extenders, DAMLs, or similar devices and minimal bridged taps consistent with ANSI T1.413 and T1.601.

3.11.5 BellSouth will provide Loop Modification to DPI on an existing sub-loop in accordance with procedures developed in the Line Sharing Collaborative. Procedures for High Frequency Spectrum (Remote Site) Unbundled Loop Modification were developed in the Line Sharing Collaborative and may be found posted to the web at http://www.interconnection.bellsouth.com/html/unes.html. Nonrecurring rates for this UNE offering are as set forth in Exhibit B of this Attachment. BellSouth is not required to modify a Loop for access to the High Frequency spectrum if modification of that Loop significantly degrades BellSouth's voice service. If DPI requests modifications on a sub-loop longer than 18,000 ft. and requested modifications significantly degrades the voice services on the Loop, DPI shall pay for the Loop to be restored to its original state.

3.11.6 The High Frequency Spectrum shall only be available on sub-loops provided by BellSouth that continues to provide analog voice service directly to the end user. In the event the End User terminates its BellSouth provided voice service for any reason, or in the event BellSouth disconnects the end user's voice service pursuant to its tariffs or applicable law, and DPI desires to continue providing xDSL service on such sub-loop, DPI shall be required to purchase a full stand-alone sub-loop. To the extent commercially practicable, BellSouth shall give DPI notice in a

reasonable time prior to disconnect, which notice shall give DPI an adequate opportunity to notify BellSouth of its intent to purchase such sub-loop. In those cases where BellSouth no longer provides voice service to the end user and DPI purchases the full stand-alone sub-loop, DPI may elect the type of sub-loop it will purchase. DPI will pay the appropriate recurring and nonrecurring rates for such sub-loop as set forth in Exhibit B to this Attachment. In the event DPI purchases a voice grade Loop, DPI acknowledges that such sub-loop may not remain xDSL compatible.

3.11.7 Only one competitive local exchange carrier shall be permitted access to the High Frequency Spectrum of any particular sub-loop.

3.12 **Provisioning of High Frequency Spectrum and Splitter Space**

3.12.1 BellSouth will provide DPI with access to the High Frequency Spectrum as follows:

3.12.1.1 To order High Frequency Spectrum on a particular sub-loop, DPI must have a Digital Subscriber Line Access Multiplexer (DSLAM) collocated at the remote site that serves the End User of such sub-loop.

3.12.1.2 DPI may provide its own splitters or may order splitters in a remote site once the DPI has installed its DSLAM at that remote site. BellSouth will install splitters within thirty-six (36) calendar days of DPI's submission of an error free Line Splitter Ordering Document (LSOD) to the BellSouth Complex Resale Support Group.

3.12.1.3 Once a splitter is installed on behalf of DPI in a remote site in which DPI is located, DPI shall be entitled to order the High Frequency Spectrum on lines served out of that remote site. BellSouth will bill and DPI shall pay applicable for High Frequency Spectrum End User activation.

3.13 BellSouth Owned Splitter

3.13.1 BellSouth will select, purchase, install and maintain a splitter at the remote site. The DPI's meet point is at the BellSouth "cross connect" point located at the Feeder Distribution Interface (FDI). DPI will provide a cable facility to the BellSouth FDI. BellSouth will splice the DPI's cable to BellSouth's spare binding post in the FDI and use "cross connects" to connect the DPI's cable facility to the BellSouth splitter. The splitter will route the high frequency portion of the circuit to the DPI's xDSL equipment in their collocation space. Access to the high frequency spectrum is not compatible with foreign exchange (FX) lines, ISDN, and other services listed in the technical section of this document.

3.13.2 The BellSouth splitter bifurcates the digital and voice band signals. The low frequency voice band portion of the circuit is routed back to the BellSouth switch. The high frequency digital traffic portion of the circuit is routed to the xDSL

equipment in the DPI's Remote Terminal (RT) collocation space and routed back to the DPI's network. At least 30 business days before making a change in splitter suppliers, BellSouth will provide DPI with a carrier notification letter informing DPI of change. DPI shall purchase ports on the splitter in increments of 24 ports.

3.13.3 BellSouth will install the splitter in (i) a common area close to DPI's collocation area, if possible; or (ii) in a BellSouth relay rack as close to DPI's DS0 termination point as possible. DPI shall have access to the splitter for test purposes regardless of where the splitter is placed in the BellSouth premises. For purposes of this section, a common area is defined as an area in the remote site in which both Parties have access to a common test access point. BellSouth will cross-connect the splitter data ports to a specified DPI DS0 at such time that a DPI end user's service is established.

3.14 **CLEC Owned Splitter**

3.14.1 DPI may at its option purchase, install and maintain splitters in its collocation arrangements. DPI may use such splitters for access to its customers and to provide digital line subscriber services to its customers using the High Frequency Spectrum. Existing Collocation rules and procedures shall apply. DPI will be required to activate cable pairs in no less than 8 (eight) pair increments.

3.14.2 Any splitters installed by DPI in its collocation arrangement shall comply with ANSI T1.413, Annex E, or any future ANSI splitter Standards. DPI may install any splitters that BellSouth deploys or permits to be deployed for itself or any BellSouth affiliate.

3.15 **Ordering**

3.15.1 DPI shall use BellSouth's Remote Splitter Ordering Document (RSOD) to order and activate splitters from BellSouth or to activate CLEC owned splitters at an RT for use with High Frequency Spectrum.

3.15.2 BellSouth will provide DPI the Local Service Request (LSR) format to be used when ordering the High Frequency Spectrum.

3.15.3 BellSouth will provision High Frequency Spectrum in compliance with BellSouth's Products and Services Interval Guide available at the website at http://www.interconnection.bellsouth.com.

3.15.4 BellSouth will provide DPI access to Preordering Loop Makeup (LMU) in accordance with the terms of this Agreement. BellSouth shall bill and DPI shall pay the rates for such services as described in Exhibit B.

3.15.5 BellSouth shall test the data portion of the sub-loop to ensure the continuity of the wiring for DPI's data.

3.16 **Maintenance and Repair**

3.16.1 DPI shall have access for repair and maintenance purposes to any sub-loop for which it has access to the High Frequency Spectrum. If DPI is using a BellSouth owned splitter, DPI may access the sub-loop at the point where the data signal exits. If DPI provides its own splitter, it may test from the collocation space or the Termination Point.

3.16.2 BellSouth will be responsible for repairing voice services and the physical line between the network interface device at the customer's premises and the Termination Point. DPI will be responsible for repairing data services. Each Party will be responsible for maintaining its own equipment.

3.16.3 DPI shall inform its end users to direct data problems to DPI, unless both voice and data services are impaired, in which event the end users should call BellSouth.

3.16.4 Once a Party has isolated a trouble to the other Party's portion of the sub-loop, the Party isolating the trouble shall notify the end user that the trouble is on the other Party's portion of the sub-loop.

3.16.5 Notwithstanding anything else to the contrary in this Agreement, when BellSouth receives a voice trouble and isolates the trouble to the physical collocation arrangement belonging to DPI, BellSouth will notify DPI. DPI will provide at least one but no more than two (2) verbal connecting facility assignments (CFA) pair changes to BellSouth in an attempt to resolve the voice trouble. In the event a CFA pair change resolves the voice trouble, DPI will provide BellSouth an LSR with the new CFA pair information within 24 hours. If the owner of the collocation space fails to resolve the trouble by providing BellSouth with the verbal CFA pair changes, BellSouth may discontinue DPI's access to the High Frequency Spectrum on such sub-loop. BellSouth will not be responsible for any loss of data as a result of this action.

4 Local Switching

4.1 BellSouth shall provide non-discriminatory access to local circuit switching capability and local tandem switching capability on an unbundled basis, except as set forth in the Sections below to DPI for the provision of a telecommunications service. BellSouth shall provide non-discriminatory access to packet switching capability on an unbundled basis to DPI for the provision of a telecommunications service only in the limited circumstance described below in Section 4.5.

4.2 **<u>Local Circuit Switching Capability, including Tandem Switching Capability</u>**

4.2.1 Local circuit switching capability is defined as: (A) line-side facilities, which include but are not limited to the connection between a Loop termination at a main distribution frame and a switch line card; (B) trunk-side facilities, which include but are not limited to the connection between trunk termination at a trunk-side

cross-connect panel and a switch trunk card; (C) switching provided by remote switching modules; and (D) all features, functions, and capabilities of the switch, which include but are not limited to: (1) the basic switching function of connecting lines to lines, line to trunks, trunks to lines, and trunks to trunks, as well as the same basic capabilities made available to BellSouth's customers, such as a telephone number, white page listings, and dial tone; and (2) all other features that the switch is capable of providing, including but not limited to customer calling, customer local area signaling service features, and Centrex, as well as any technically feasible customized routing functions provided by the switch. Any features that are not currently available but are technically feasible through the switch can be requested through the BFR/NBR process.

4.2.2 Notwithstanding BellSouth's general duty to unbundle local circuit switching, BellSouth shall not be required to unbundle local circuit switching for DPI when DPI serves an End User with four (4) or more voice-grade (DS-0) equivalents or lines served by BellSouth in one of the following MSAs: Atlanta, GA; Miami, FL; Orlando, FL; Ft. Lauderdale, FL; Charlotte-Gastonia-Rock Hill, NC; Greensboro-Winston Salem-High Point, NC; Nashville, TN; and New Orleans, LA, and BellSouth has provided non-discriminatory cost based access to the Enhanced Extended Link (EEL) throughout Density Zone 1 as determined by NECA Tariff No. 4 as in effect on January 1, 1999.

4.2.3 In the event that DPI orders local circuit switching for an end user with four (4) or more DS0 equivalent lines within Density Zone 1 in an MSA listed above, BellSouth shall charge DPI the market based rates in Exhibit B for use of the local circuit switching functionality for the affected facilities. If a market rate is not set forth in Exhibit B, such rate shall be negotiated by the Parties.

4.2.4 Unbundled Local Switching consists of three separate unbundled elements: Unbundled Ports, End Office Switching Functionality, and End Office Interoffice Trunk Ports.

4.2.5 Unbundled Local Switching combined with Common Transport and, if necessary, Tandem Switching provides to DPI's end user local calling and the ability to presubscribe to a primary carrier for intraLATA and/or to presubscribe to a primary carrier for interLATA toll service.

4.2.6 Provided that DPI purchases unbundled local switching from BellSouth and uses the BellSouth Carrier Identification Code (CIC) for its end users' Local Preferred Interexchange Carrier (LPIC) or if a BellSouth local end user selects BellSouth as its LPIC, then the Parties will consider as local any calls originated by a DPI local end user, or originated by a BellSouth local end user and terminated to a DPI local end user, where such calls originate and terminate in the same LATA, except for those calls originated and terminated through switched access arrangements (i.e., calls that are transported by a Party other than BellSouth). For such calls, BellSouth will charge DPI the UNE elements for the BellSouth facilities utilized.

Neither Party shall bill the other originating or terminating switched access charges for such calls. Intercarrier compensation for local calls between BellSouth and DPI shall be as described in BellSouth's UNE Local Call Flows set forth on BellSouth's web site.

4.2.7 Where DPI purchases unbundled local switching from BellSouth but does not use the BellSouth CIC for its end users' LPIC, BellSouth will consider as local those direct dialed telephone calls that originate from a DPI end user and terminate within the basic local calling area or within the extended local calling areas and that are dialed using 7 or 10 digits as defined and specified in Section A3 of BellSouth's General Subscriber Services Tariffs. For such local calls, BellSouth will charge DPI the UNE elements for the BellSouth facilities utilized. Intercarrier compensation for local calls between BellSouth and DPI shall be as described in BellSouth's UNE Local Call Flows set forth on BellSouth's web site.

4.2.8 For any calls that originate and terminate through switched access arrangements (i.e., calls that are transported by a party other than BellSouth), BellSouth shall bill DPI the UNE elements for the BellSouth facilities utilized. Each Party may bill the toll provider originating or terminating switched access charges as appropriate.

4.2.9 **Unbundled Port Features**

4.2.9.1 Charges for Unbundled Port are as set forth in Exhibit B, and as specified in such exhibit, may or may not include individual features.

4.2.9.2 Where applicable and available, non-switch-based services may be ordered with the Unbundled Port at BellSouth's retail rates.

4.2.9.3 Any features that are not currently available but are technically feasible through the switch can be requested through the- BFR/NBR process.

4.2.9.4 BellSouth will provide to DPI selective routing of calls to a requested Operator System platform pursuant to Section 10 of Attachment 2. Any other routing requests by DPI will be made pursuant to the BFR/NBR Process as set forth in Attachment 11.

4.2.10 **Remote Call Forwarding**

4.2.10.1 As an option, BellSouth shall make available to DPI an unbundled port with Remote Call Forwarding capability (URCF service). URCF service combines the functionality of unbundled local switching, tandem switching and common transport to forward calls from the URCF service telephone number (the number dialed by the calling party) to another telephone number selected by the URCF service subscriber. When ordering URCF service, DPI will ensure that the following conditions are satisfied:

4.2.10.1.1 That the end user of the forward-to number (service) agrees to receive calls forwarded using the URCF service (if such end user is different from the URCF service end user);

4.2.10.1.2 That the forward-to number (service) is equipped with sufficient capacity to receive the volume of calls that will be generated from the URCF service;

4.2.10.1.3 That the URCF service will not be utilized to forward calls to another URCF or similar service; and

4.2.10.1.4 That the forward-to number (service) is not a public safety number (e.g. 911, fire or police number).

4.2.10.2 In addition to the charge for the URCF service port, BellSouth shall charge DPI the rates set forth in Exhibit B for unbundled local switching, tandem switching, and common transport, including all associated usage incurred for calls from the URCF service telephone number (the number dialed by the calling party) to the forward- to number (service).

4.2.11 **Provision for Local Switching**

4.2.11.1 BellSouth shall perform routine testing (e.g., Mechanized Loop Tests (MLT) and test calls such as 105, 107 and 108 type calls) and fault isolation on a mutually agreed upon schedule.

4.2.11.2 BellSouth shall control congestion points such as those caused by radio station call-ins and network routing abnormalities. All traffic shall be restricted in a non-discriminatory manner.

4.2.11.3 BellSouth shall perform manual call trace and permit customer originated call trace. BellSouth shall provide Switching Service Point (SSP) capabilities and signaling software to interconnect the signaling links destined to the Signaling Transfer Point Switch (STPS). These capabilities shall adhere to the technical specifications set forth in the applicable industry standard technical references.

4.2.11.4 BellSouth shall provide interfaces to adjuncts through Telcordia standard interfaces. These adjuncts can include, but are not limited to, the Service Circuit Node and Automatic Call Distributors. BellSouth shall offer to DPI all AIN triggers in connection with its SMS/SCE offering.

4.2.11.5 BellSouth shall provide access to SS7 Signaling Network or Multi-Frequency trunking if requested by DPI.

4.2.12 **Local Switching Interfaces**.

4.2.12.1 DPI shall order ports and associated interfaces compatible with the services it wishes to provide as listed in Exhibit B. BellSouth shall provide the following local switching interfaces:

4.2.12.1.1 Standard Tip/Ring interface including loopstart or groundstart, on-hook signaling (e.g., for calling number, calling name and message waiting lamp);

4.2.12.1.2 Coin phone signaling;

4.2.12.1.3 Basic Rate Interface ISDN adhering to appropriate Telcordia Technical Requirements;

4.2.12.1.4 Two-wire analog interface to PBX;

4.2.12.1.5 Four-wire analog interface to PBX;

4.2.12.1.6 Four-wire DS1 interface to PBX or customer provided equipment (e.g. computers and voice response systems);

4.2.12.1.7 Primary Rate ISDN to PBX adhering to ANSI standards Q.931, Q.932 and appropriate Telcordia Technical Requirements;

4.2.12.1.8 Switched Fractional DS1 with capabilities to configure Nx64 channels (where N = 1 to 24); and

4.2.12.1.9 Loops adhering to Telcordia TR-NWT-08 and TR-NWT-303 specifications to interconnect Digital Loop Carriers.

4.3 **Tandem Switching**

4.3.1 The Tandem Switching capability Network Element is defined as: (i) trunk-connect facilities, which include, but are not limited to, the connection between trunk termination at a cross connect panel and switch trunk card; (ii) the basic switch trunk function of connecting trunks to trunks; and (iii) the functions that are centralized in the Tandem Switches (as distinguished from separate end office switches), including but not limited to call recording, the routing of calls to operator services and signaling conversion features.

4.3.2 Technical Requirements

4.3.2.1 Tandem Switching shall have the same capabilities or equivalent capabilities as those described in Telcordia TR-TSY-000540 Issue 2R2, Tandem Supplement, 6/1/90. The requirements for Tandem Switching include but are not limited to the following:

4.3.2.1.1 Tandem Switching shall provide signaling to establish a tandem connection;

4.3.2.1.2 Tandem Switching will provide screening as jointly agreed to by DPI and BellSouth;

4.3.2.1.3 Tandem Switching shall provide Advanced Intelligent Network triggers supporting AIN features where such routing is not available from the originating end office switch, to the extent such Tandem switch has such capability;

4.3.2.1.4 Tandem Switching shall provide access to Toll Free number database;

4.3.2.1.5 Tandem Switching shall provide connectivity to PSAPs where 911 solutions are deployed and the tandem is used for 911; and

4.3.2.1.6 Where appropriate, Tandem Switching shall provide connectivity for the purpose of routing transit traffic to and from other carriers.

4.3.2.2 BellSouth may perform testing and fault isolation on the underlying switch that is providing Tandem Switching. Such testing shall be testing routinely performed by BellSouth. The results and reports of the testing shall be made available to DPI.

4.3.2.3 BellSouth shall control congestion points and network abnormalities. All traffic will be restricted in a non-discriminatory manner.

4.3.2.4 Tandem Switching shall process originating toll-free traffic received from DPI's local switch.

4.3.2.5 In support of AIN triggers and features, Tandem Switching shall provide SSP capabilities when these capabilities are not available from the Local Switching Network Element to the extent such Tandem Switch has such capability.

4.3.3 Upon DPI's purchase of overflow trunk groups, Tandem Switching shall provide an alternate routing pattern for DPI's traffic overflowing from direct end office high usage trunk groups.

4.4 **AIN Selective Carrier Routing for Operator Services, Directory Assistance and Repair Centers**

4.4.1 BellSouth will provide AIN Selective Carrier Routing at the request of DPI. AIN Selective Carrier Routing will provide DPI with the capability of routing operator calls, 0+ and 0- and 0+ NPA (Local Numbering Plan Area) (LNPA) 555-1212 directory assistance, 1+411 directory assistance and 611 repair center calls to pre-selected destinations.

4.4.2 DPI shall order AIN Selective Carrier Routing through its Account Team and/or Local Contract Manager. AIN Selective Carrier Routing must first be established regionally and then on a per central office per state basis.

4.4.3 AIN Selective Carrier Routing is not available in DMS 10 switches.

4.4.4 Where AIN Selective Carrier Routing is utilized by DPI, the routing of DPI's end user calls shall be pursuant to information provided by DPI and stored in BellSouth's AIN Selective Carrier Routing Service Control Point database. AIN Selective Carrier Routing shall utilize a set of Line Class Codes (LCCs) unique to a basic class of service assigned on an "as needed" basis. The same LCCs will be assigned in each central office where AIN Selective Carrier Routing is established.

4.4.5 Upon ordering AIN Selective Carrier Routing Regional Service, DPI shall remit to BellSouth the Regional Service Order nonrecurring charges set forth in Exhibit B of this Attachment. There shall be a nonrecurring End Office Establishment Charge per office due at the addition of each central office where AIN Selective Carrier Routing will be utilized. Said nonrecurring charge shall be as set forth in Exhibit B of this Attachment. For each DPI end user activated, there shall be a nonrecurring End User Establishment charge as set forth in Exhibit B of this Attachment. DPI shall pay the AIN Selective Carrier Routing Per Query Charge set forth in Exhibit B of this Attachment.

4.4.6 This Regional Service Order nonrecurring charge will be non-refundable and will be paid with 1/2 due up-front with the submission of all fully completed required forms including: Regional Selective Carrier Routing (SCR) Order Request-Form A, Central Office AIN Selective Carrier Routing (SCR) Order Request - Form B, AIN_SCR Central Office Identification Form - Form C, AIN_SCR Routing Options Selection Form - Form D, and Routing Combinations Table - Form E. BellSouth has 30 days to respond to DPI's fully completed firm order as a Regional Service Order. With the delivery of this firm order response to DPI, BellSouth considers that the delivery schedule of this service commences. The remaining 1/2 of the Regional Service Order payment must be paid when at least 90% of the Central Offices listed on the original order have been turned up for the service.

4.4.7 The nonrecurring End Office Establishment Charge will be billed to DPI following BellSouth's normal monthly billing cycle for this type of order.

4.4.8 End-User Establishment Orders will not be turned-up until the second payment is received for the Regional Service Order. The nonrecurring End-User Establishment Charges will be billed to DPI following BellSouth's normal monthly billing cycle for this type of order.

4.4.9 Additionally, the AIN Selective Carrier Routing Per Query Charge will be billed to DPI following the normal billing cycle for per query charges.

4.4.10 All other network components needed, for example, unbundled switching, unbundled local transport, etc., will be billed per contracted rates.

4.5 **Packet Switching Capability**

4.5.1 The packet switching capability network element is defined as the function of routing or forwarding packets, frames, cells or other data units based on address or other routing information contained in the packets, frames, cells or other data units.

4.5.2 BellSouth shall be required to provide non-discriminatory access to unbundled packet switching capability only where each of the following conditions are satisfied:

4.5.2.1 BellSouth has deployed digital loop carrier systems, including but not limited to, integrated digital loop carrier or universal digital loop carrier systems; or has deployed any other system in which fiber optic facilities replace copper facilities in the feeder section (e.g., end office to remote terminal, pedestal or environmentally controlled vault);

4.5.2.2 There are no spare copper Loops capable of supporting the xDSL services DPI seeks to offer;

4.5.2.3 BellSouth has not permitted DPI to deploy a DSLAM at the remote terminal, pedestal or environmentally controlled vault or other interconnection point, nor has DPI obtained a virtual collocation arrangement at these sub-loop interconnection points as defined by 47 CFR § 51.319 (b); and

4.5.2.4 BellSouth has deployed packet switching capability for its own use.

4.5.3 If there is a dispute as to whether BellSouth must provide Packet Switching, such dispute will be resolved according to the dispute resolution process set forth in Section 10 of the General Terms and Conditions of this Agreement incorporated herein by this reference.

5 Unbundled Network Element Combinations

5.1 For purposes of this Section, references to “Currently Combined” network elements shall mean that the particular network elements requested by DPI are in fact already combined by BellSouth in the BellSouth network. References to “Ordinarily Combined” network elements shall mean that the particular network elements requested by DPI are not already combined by BellSouth in the location requested by DPI but are elements that are typically combined in BellSouth’s network. References to “Not Typically Combined” network elements shall mean that the particular network elements requested by DPI are not elements that BellSouth combines for its use in its network.

5.2 Enhanced Extended Links (EELs)

5.2.1 EELs are combinations of unbundled Loops as defined in Section 2 and unbundled dedicated transport as defined in Section 6. BellSouth shall provide DPI with EELs where they are available.

5.2.2 EELs are intended to provide service connectivity from an end user's location through that end user's SWC to DPI's collocation space in a BellSouth central office. The circuit must be connected to DPI's switch for the purpose of provisioning circuit telephone exchange service to DPI's End User customers. DPI may connect EELs within DPI's collocation space to other transport terminating into DPI's switch. DPI may connect the local loops to an unbundled local channel to form an EEL provided that the entire EEL circuit meets the criteria set forth in Section 5.3.1.3 below. Provided that the entire EEL circuit meets the criteria set forth in Section 5.3.1.3 below, the circuit may, upon DPI's request, terminate to a CLEC's Point of Presence (POP). DPI will provide a significant amount of local exchange service over the requested combination, as described in Section 5.3.1 et seq. below. Upon BellSouth's request, DPI shall indicate under what local usage option DPI seeks to qualify. DPI shall be deemed to be providing a significant amount of local exchange service over the requested combination if one of the options listed in Section 5.3.1.1 through 5.3.1.3 is met. BellSouth shall have the right to audit DPI's EELs as specified in Section 5.3.3 below.

5.3 Conversions from Special Access Service to EELs

5.3.1 DPI may convert existing (Currently Combined) special access services to combinations of Loop and transport network elements, whether or not DPI self-provides its entrance facilities (or obtains entrance facilities from a third party), unless DPI does not use the combination to provide a significant amount of local exchange service, in addition to exchange access service, to a particular customer. To the extent DPI requests to convert any special access services to combinations of Loop and transport network elements at UNE prices, DPI shall provide to BellSouth a certification that DPI is providing a significant amount of local exchange service (as described in this Section) over such combinations. The certification shall also indicate under what local usage option DPI seeks to qualify for conversion of special access circuits. DPI shall be deemed to be providing a significant amount of local exchange service over such combinations if one of the following options is met:

5.3.1.1 **Option 1:** DPI certifies that it is the exclusive provider of an end user's local exchange service. The Loop-transport combinations must terminate at DPI's collocation arrangement in at least one BellSouth central office. This option does not allow Loop-transport combinations to be connected to BellSouth's tariffed services. Under this option, DPI is the end user's only local service provider, and thus is providing more than a significant amount of local exchange service. DPI can then use the Loop-transport combinations that serve the end user to carry any type of traffic, including using them to carry 100 percent interstate access traffic; or

5.3.1.2 **Option 2:** DPI certifies that it provides local exchange and exchange access service to the end user customer's premises and handles at least one third of the end user customer's local traffic measured as a percent of total end user customer local dial tone lines; and for DS1 circuits and above, at least 50 percent of the activated channels on the Loop portion of the Loop-transport combination have at least 5 percent local voice traffic individually, and the entire Loop facility has at least 10 percent local voice traffic. When a Loop-transport combination includes multiplexing, each of the individual DS1 circuits must meet this criterion. The Loop-transport combination must terminate at DPI's collocation arrangement in at least one BellSouth central office. This option does not allow Loop-transport combinations to be connected to BellSouth tariffed services; or

5.3.1.3 **Option 3:** DPI certifies that at least 50 percent of the activated channels on a circuit are used to provide originating and terminating local dial tone service and at least 50 percent of the traffic on each of these local dial tone channels is local voice traffic, and that the entire Loop facility has at least 33 percent local voice traffic. When a Loop-transport combination includes multiplexing, each of the individual DS1 circuits must meet this criterion. This option does not allow Loop-transport combinations to be connected to BellSouth's tariffed services. Under this option, collocation is not required. DPI does not need to provide a defined portion of the end user's local service, but the active channels on any Loop-transport combination, and the entire facility, must carry the amount of local exchange traffic specified in this option.

5.3.2 In addition, there may be extraordinary circumstances where DPI is providing a significant amount of local exchange service but does not qualify under any of the three options set forth in Section 5.3.1 et seq. In such case, DPI may petition the FCC for a waiver of the local usage options set forth above. If a waiver is granted, then upon either Party's request the Parties shall amend this Agreement to the extent necessary to incorporate the terms of such waiver for such extraordinary circumstance.

5.3.3 BellSouth may, at its sole discretion, audit DPI's records in order to verify compliance with the local usage option provided by DPI pursuant to Section 5.3.1. The audit shall be conducted by a third party independent auditor, and DPI shall be given thirty days written notice of BellSouth's intent to audit. Such audit shall occur no more than one time in a calendar year unless results of an audit find noncompliance with the significant amount of local exchange service requirement. In the event of noncompliance, DPI shall reimburse BellSouth for the cost of the audit. If, based on the audit, DPI is not providing a significant amount of local exchange traffic over the combinations of Loop and transport network elements, BellSouth will convert such combinations of Loop and transport network elements to special access services in accordance with BellSouth's tariffs and will bill DPI

for appropriate retroactive reimbursement. If the Parties disagree as to whether the audits indicate that DPI is not providing a significant amount of local exchange traffic, the dispute will be resolved according to the dispute resolution process set forth in Section 10 of the General Terms and Conditions of this Agreement.
In the event DPI converts special access circuits to combinations of Loop and transport UNEs pursuant to the terms of this Section, DPI shall be subject to the termination liability provisions in the applicable special access tariffs, if any.

5.4 Rates

5.4.1 Currently Combined EELs listed below in Sections 5.4.1.1-5.4.1.14 shall be billed at the nonrecurring switch-as-is charge and recurring charges for that combination as set forth in Exhibit B of this Attachment. Currently Combined EELs not listed below shall be billed at the sum of the recurring charges for the individual network elements that comprise the combination as set forth in Exhibit B of this Attachment and a nonrecurring switch-as-is charge as set forth in Exhibit B of this Attachment.

5.4.1.1 DS1 Interoffice Channel + DS1 Channelization + 2-wire VG Local Loop

5.4.1.2 DS1 Interoffice Channel + DS1 Channelization + 4-wire VG Local Loop

5.4.1.3 DS1 Interoffice Channel + DS1 Channelization + 2-wire ISDN Local Loop

5.4.1.4 DS1 Interoffice Channel + DS1 Channelization + 4-wire 56 kbps Local Loop

5.4.1.5 DS1 Interoffice Channel + DS1 Channelization + 4-wire 64 kbps Local Loop

5.4.1.6 DS1 Interoffice Channel + DS1 Local Loop

5.4.1.7 DS3 Interoffice Channel + DS3 Local Loop

5.4.1.8 STS-1 Interoffice Channel + STS-1 Local Loop

5.4.1.9 DS3 Interoffice Channel + DS3 Channelization + DS1 Local Loop

5.4.1.10 STS-1 Interoffice Channel + DS3 Channelization + DS1 Local Loop

5.4.1.11 2-wire VG Interoffice Channel + 2-wire VG Local Loop

5.4.1.12 4wire VG Interoffice Channel + 4-wire VG Local Loop

5.4.1.13 4-wire 56 kbps Interoffice Channel + 4-wire 56 kbps Local Loop

5.4.1.14 4-wire 64 kbps Interoffice Channel + 4-wire 64 kbps Local Loop

5.4.2 Ordinarily Combined EELs listed above shall be billed the sum of the nonrecurring and recurring charges for that combination as set forth in Exhibit B of this Attachment. Ordinarily combined EELs not listed in Sections 5.4.1.1-5.4.1.14 shall be billed the sum of the nonrecurring charges and recurring charges for the individual network elements that comprise the combination as set forth in Exhibit B of this Attachment.

5.4.3 To the extent that DPI requests an EEL combination Not Typically Combined in the BellSouth network, the rates, terms and conditions shall be determined pursuant to the Bona Fide Request Process.

5.5 UNE Port/Loop Combinations

5.5.1 Combinations of port and Loop unbundled network elements along with switching and transport unbundled network elements provide local exchange service for the origination or termination of calls. Port/ Loop combinations support the same local calling and feature requirements as described in the Unbundled Local Switching or Port section of this Attachment 2 and the ability to presubscribe to a primary carrier for intraLATA toll service and/or to presubscribe to a primary carrier for interLATA toll service.

5.5.2 Except as set forth in Section 5.5.3 below, BellSouth shall provide UNE port/Loop combinations described in Section 5.5.5 below that are Currently Combined or Ordinarily Combined in BellSouth's network at the cost-based rates in Exhibit B. Except as set forth in Section 5.5.3 below, BellSouth shall provide UNE port/Loop combinations not described in Section 5.5.5 below or Not Typically Combined Combinations in accordance with the Bona Fide Request process.

5.5.3 BellSouth is not required to provide combinations of port and Loop network elements on an unbundled basis in locations where, pursuant to FCC rules, BellSouth is not required to provide circuit switching as an unbundled network element.

5.5.3.1 BellSouth shall not be required to provide local circuit switching as an unbundled network element in density Zone 1, as defined in 47 CFR 69.123 as of January 1, 1999 of the Atlanta, GA; Miami, FL; Orlando, FL; Ft. Lauderdale, FL; Charlotte-Gastonia-Rock Hill, NC; Greensboro-Winston Salem-High Point, NC; Nashville, TN; and New Orleans, LA, MSAs to DPI if DPI's customer has 4 or more DS0 equivalent lines.

5.5.3.2 Notwithstanding the foregoing, BellSouth shall provide combinations of port and Loop network elements on an unbundled basis where, pursuant to FCC rules, BellSouth is not required to provide local circuit switching as an unbundled network element and shall do so at the market rates in Exhibit B. If a market rate is not set forth in Exhibit B for a UNE port/Loop combination, such rate shall be negotiated by the Parties.

5.5.4 BellSouth shall make 911 updates in the BellSouth 911 database for DPI's UNE port/Loop combinations. BellSouth will not bill DPI for 911 surcharges. DPI is responsible for paying all 911 surcharges to the applicable governmental agency.

5.5.5 Combination Offerings

5.5.5.1 2-wire voice grade port, voice grade Loop, unbundled end office switching, unbundled end office trunk port, common transport per mile per MOU, common transport facilities termination, tandem switching, and tandem trunk port.

5.5.5.2 2-wire voice grade Coin port, voice grade Loop, unbundled end office switching, unbundled end office trunk port, common transport per mile per MOU, common transport facilities termination, tandem switching, and tandem trunk port.

5.5.5.3 2-wire voice grade DID port, voice grade Loop, unbundled end office switching, unbundled end office trunk port, common transport per mile per MOU, common transport facilities termination, tandem switching, and tandem trunk port.

5.5.5.4 2-wire CENTREX port, voice grade Loop, CENTREX intercom functionality, unbundled end office switching, unbundled end office trunk port, common transport per mile per MOU, common transport facilities termination, tandem switching, and tandem trunk port.

5.5.5.5 2-wire ISDN Basic Rate Interface, voice grade Loop, unbundled end office switching, unbundled end office trunk port, common transport per mile per MOU, common transport facilities termination, tandem switching, and tandem trunk port.

5.5.5.6 4-wire ISDN Primary Rate Interface, DS1 Loop, unbundled end office switching, unbundled end office trunk port, common transport per mile per MOU, common transport facilities termination, tandem switching, and tandem trunk port.

5.5.5.7 4-wire DS1 Trunk port, DS1 Loop, unbundled end office switching, unbundled end office trunk port, common transport per mile per MOU, common transport facilities termination, tandem switching, and tandem trunk port.

5.5.5.8 4-wire DS1 Loop with normal serving wire center channelization interface, 2-wire voice grade ports (PBX), 2-wire DID ports, unbundled end office switching, unbundled end office trunk port, common transport per mile per MOU, common transport facilities termination, tandem switching, and tandem trunk port.

5.6 **Other UNE Combinations**

5.6.1 BellSouth shall provide other Currently Combined and Ordinarily Combined and Not Typically Combined UNE Combinations to DPI in addition to those specifically referenced in this Section 5 above, where available. Such combinations shall not be connected to BellSouth tariffed services. To the extent DPI requests a combination for which BellSouth does not have methods and procedures in place to provide such combination, rates and/or methods and procedures for such combination will be developed pursuant to the BFR/NBR process.

5.6.2 Rates

5.6.3 The rates for Ordinarily Combined UNE Combinations provisioned pursuant to this Section 5.6 shall be the sum of the recurring rates and nonrecurring rates for the individual network elements as set forth in Exhibit B of this Attachment. The rates for Currently Combined UNE Combinations provisioned pursuant to this Section 5.6 shall be the sum of the recurring rates for the individual network elements as set forth in Exhibit B, in addition to a nonrecurring charge set forth in Exhibit B. To the extent DPI requests a Not Typically Combined Combination pursuant to this Section 5.6, or to the extent DPI requests any combination for which BellSouth has not developed methods and procedures to provide such combination, rates and/or methods and procedures for such combination shall be established pursuant to the BFR/NBR process.

6 Transport, Channelization and Dark Fiber

6.1 **<u>Transport</u>**

6.1.1 BellSouth shall provide nondiscriminatory access, in accordance with FCC Rule 51.311 and Section 251(c)(3) of the Act, to interoffice transmission facilities on an unbundled basis to DPI for the provision of a telecommunications service. Interoffice transmission facility network elements include:

6.1.1.1 Dedicated transport, defined as BellSouth's transmission facilities, is dedicated to a particular customer or carrier that provides telecommunications between wire centers or switches owned by BellSouth, or between wire centers and switches owned by BellSouth and DPI.

6.1.1.2 Dark Fiber transport, defined as BellSouth's optical transmission facilities without attached signal regeneration, multiplexing, aggregation or other electronics;

6.1.1.3 Common (Shared) transport, defined as transmission facilities shared by more than one carrier, including BellSouth, between end office switches, between end office switches and tandem switches, and between tandem switches, in BellSouth's network. Where BellSouth Network Elements are connected by intraoffice wiring, such wiring is provided as part of the Network Element and is not Common (Shared) Transport.

6.1.2 BellSouth shall:

6.1.2.1 Provide DPI exclusive use of interoffice transmission facilities dedicated to a particular customer or carrier, or shared use of the features, functions, and capabilities of interoffice transmission facilities shared by more than one customer or carrier;

6.1.2.2 Provide all technically feasible transmission facilities, features, functions, and capabilities of the transport facility for the provision of telecommunications services;

6.1.2.3 Permit, to the extent technically feasible, DPI to connect such interoffice facilities to equipment designated by DPI, including but not limited to, DPI's collocated facilities; and

6.1.2.4 Permit, to the extent technically feasible, DPI to obtain the functionality provided by BellSouth's digital cross-connect systems.

6.1.3 Technical Requirements of Common (Shared) Transport

6.1.3.1 Common (Shared) Transport provided on DS1, DS3, and STS-1 circuits shall at a minimum meet the performance, availability, jitter, and delay requirements specified for Central Office to Central Office (CO to CO) connections in the applicable industry standards.

6.1.3.2 BellSouth shall be responsible for the engineering, provisioning, and maintenance of the underlying equipment and facilities that are used to provide Common (Shared) Transport.

6.1.3.3 At a minimum, Common (Shared) Transport shall meet all of the requirements set forth in the applicable industry standards.

6.2 **Dedicated Transport**

6.2.1 Dedicated Transport is composed of the following Unbundled Network Elements:

6.2.1.1 Unbundled Local Channel, defined as the dedicated transmission path between DPI's Point of Presence (POP) and DPI's collocation space in the BellSouth Serving Wire Center for DPI's POP, and

6.2.1.2 Unbundled Interoffice Channel, defined as the dedicated transmission path that provides telecommunication between BellSouth's Serving Wire Centers' collocations.

6.2.1.3 BellSouth shall offer Dedicated Transport in each of the following ways:

6.2.1.3.1 As capacity on a shared UNE facility.

6.2.1.3.2 As a circuit (e.g., DS0, DS1, DS3) dedicated to DPI.

6.2.1.4 Dedicated Transport may be provided over facilities such as optical fiber, copper twisted pair, and coaxial cable, and shall include transmission equipment such as line terminating equipment, amplifiers, and regenerators.

6.2.2 Technical Requirements

6.2.2.1 The entire designated transmission service (e.g., DS0, DS1, DS3) shall be dedicated to DPI designated traffic.

6.2.2.2 For DS1 or DS3 circuits, Dedicated Transport shall at a minimum meet the performance, availability, jitter, and delay requirements specified for Customer Interface to Central Office (CI to CO) connections in the applicable industry standards.

6.2.2.3 BellSouth shall offer the following interface transmission rates for Dedicated Transport:

6.2.2.3.1 DS0 Equivalent;

6.2.2.3.2 DS1; and

6.2.2.4 DS3;SDH (Synchronous Digital Hierarchy) Standard interface rates are in accordance with International Telecommunications Union (ITU) Recommendation G.707 and Plesiochronous Digital Hierarchy (PDH) rates per ITU Recommendation G.704.

6.2.2.5 BellSouth shall design Dedicated Transport according to its network infrastructure. DPI shall specify the termination points for Dedicated Transport.

6.2.2.6 At a minimum, Dedicated Transport shall meet each of the requirements set forth in the applicable industry technical references.

6.2.2.7 BellSouth Technical References:

6.2.2.7.1 TR-TSY-000191 Alarm Indication Signals Requirements and Objectives, Issue 1, May 1986.

6.2.2.7.2 TR 73501 LightGate® Service Interface and Performance Specifications, Issue D, June 1995.

6.2.2.7.3 TR 73525 MegaLink® Service, MegaLink Channel Service and MegaLink Plus Service Interface and Performance Specifications, Issue C, May 1996.

6.3 **Unbundled Channelization (Multiplexing)**

6.3.1 Unbundled Channelization (UC) provides the optional multiplexing capability that will allow a DS1 (1.544 Mbps) or DS3 (44.736 Mbps) or STS-1 (51.84 Mbps) Unbundled Network Element (UNE) or collocation cross-connect to be multiplexed or channelized at a BellSouth central office. Channelization can be accomplished through the use of a multiplexer or a digital cross-connect system at the discretion of BellSouth. Once UC has been installed, DPI may request channel activation on an as-needed basis and BellSouth shall connect the requested facilities via Central Office Channel Interfaces (COCIs). The COCI must be compatible with the lower capacity facility and ordered with the lower capacity facility. This service is available as defined in NECA 4.

6.3.2 BellSouth shall make available the following channelization systems and interfaces:

6.3.2.1 DS1 Channelization System: channelizes a DS1 signal into a maximum of 24 DS0s. The following Central Office Channel Interfaces (COCI) are available: Voice Grade, Digital Data and ISDN.

6.3.2.2 DS3 Channelization System: channelizes a DS3 signal into a maximum of 28 DS1s. A DS1 COCI is available with this system.

6.3.2.3 STS-1 Channelization System: channelizes a STS-1 signal into a maximum of 28 DS1s. A DS1 COCI is available with this system.

6.3.2.4 AMI and B8ZS line coding with either Super Frame (SF) and Extended Super Frame (ESF) framing formats will be supported as an optional feature on DS1 facilities.

6.3.3 Technical Requirements

6.3.3.1 In order to assure proper operation with BellSouth provided central office multiplexing functionality, DPI's channelization equipment must adhere strictly to form and protocol standards. DPI must also adhere to such applicable industry standards for the multiplex channel bank, for voice frequency encoding, for various signaling schemes, and for sub rate digital access.

6.3.3.2 TR 73501 LightGate®Service Interface and Performance Specifications, Issue D, June 1995

6.4 **Dark Fiber Transport**

6.4.1 Dark Fiber Transport is an unused optical transmission facility without attached signal regeneration, multiplexing, aggregation or other electronics. Dark Fiber Transport is offered in two configurations: Interoffice Channel, between DPI's collocation arrangement within the POP serving wire center and the end user service wire center and Local Channel, from DPI's POP to DPI's collocation arrangement in the POP serving wire center. It may be strands of optical fiber existing in aerial or underground structure. BellSouth will not provide line terminating elements, regeneration or other electronics necessary for DPI to utilize Dark Fiber Transport.

6.4.2 Requirements

6.4.2.1 BellSouth shall make available Dark Fiber Transport where it exists in BellSouth's network and where, as a result of future building or deployment, it becomes available. Dark Fiber Transport will not be deemed available if (1) it is used by BellSouth for maintenance and repair purposes, (2) it is designated for use pursuant to a firm order placed by another customer, (3) it is restricted for use by all carriers, including BellSouth, because of transmission problems or because it is scheduled for removal due to documented changes to roads and infrastructure, or (4) BellSouth has plans to use the fiber within a two-year planning period. BellSouth is not required to place fibers for Dark Fiber Transport if there are none available.

6.4.2.2 DPI is solely responsible for testing the quality of the Dark Fiber Transport to determine its usability and performance specifications.

6.4.2.3 BellSouth shall use its best efforts to provide to DPI information regarding the location, availability and performance of Dark Fiber Transport within ten (10) business days after receiving a request from DPI. Within such time period, BellSouth shall send written confirmation of availability of the Dark Fiber Transport.

6.4.2.4 If the requested Dark Fiber Transport is available, BellSouth shall use its commercially reasonable efforts to provision the Dark Fiber Transport to DPI within twenty (20) business days after DPI submits a valid, error free LSR. Provisioning includes identification of appropriate connection points (e.g., Light Guide Interconnection (LGX)) to enable DPI to connect DPI provided transmission media (e.g., optical fiber) or equipment to the Dark Fiber Transport.

7 BellSouth Switched Access (SWA) 8XX Toll Free Dialing Ten Digit Screening Service

7.1 The BellSouth SWA 8XX Toll Free Dialing Ten Digit Screening Service database (8XX SCP Database) is a Signaling control Point (SCP) that contains customer record information and the functionality to provide call-handling instructions for 8XX calls. The 8XX SCP IN software stores data downloaded from the national SMS/8XX database and provides the routing instructions in response to queries from the Switching Service Point (SSP) or tandem. The BellSouth SWA 8XX Toll Free Dialing Ten Digit Screening Service (8XX TFD Service) utilizes the 8XX SCP Database to provide identification and routing of the 8XX calls, based on the ten digits dialed. At DPI's option, 8XX TFD Service is provided with or without POTS number delivery, dialing number delivery, and other optional complex features as selected by DPI.

7.2 The 8XX SCP Database is designated to receive and respond to queries using the ANSI Specification of Signaling System Seven (SS7) protocol.

8 Line Information Database (LIDB)

8.1 The Line Information Database (LIDB) is a transaction-oriented database accessible through Common Channel Signaling (CCS) networks. For access to LIDB, DPI must purchase appropriate signaling links pursuant to Section 9 of this Attachment. LIDB contains records associated with end user Line Numbers and Special Billing Numbers. LIDB accepts queries from other Network Elements and provides appropriate responses. The query originator need not be the owner of LIDB data. LIDB queries include functions such as screening billed numbers that provides the ability to accept Collect or Third Number Billing calls and validation of Telephone Line Number based non-proprietary calling cards. The interface for the LIDB functionality is the interface between BellSouth's CCS network and other CCS networks. LIDB also interfaces to administrative systems.

8.2 Technical Requirements

8.2.1 BellSouth will offer to DPI any additional capabilities that are developed for LIDB during the life of this Agreement.

8.2.2 BellSouth shall process DPI's customer records in LIDB at least at parity with BellSouth customer records, with respect to other LIDB functions. BellSouth shall indicate to DPI what additional functions (if any) are performed by LIDB in the BellSouth network.

8.2.3 Within two (2) weeks after a request by DPI, BellSouth shall provide DPI with a list of the customer data items, which DPI would have to provide in order to support each required LIDB function. The list shall indicate which data items are essential to LIDB function and which are required only to support certain services.

For each data item, the list shall show the data formats, the acceptable values of the data item and the meaning of those values.

8.2.4 BellSouth shall provide LIDB systems for which operating deficiencies that would result in calls being blocked shall not exceed 30 minutes per year.

8.2.5 BellSouth shall provide LIDB systems for which operating deficiencies that would not result in calls being blocked shall not exceed 12 hours per year.

8.2.6 BellSouth shall provide LIDB systems for which the LIDB function shall be in overload no more than 12 hours per year.

8.2.7 All additions, updates and deletions of DPI data to the LIDB shall be solely at the direction of DPI. Such direction from DPI will not be required where the addition, update or deletion is necessary to perform standard fraud control measures (e.g., calling card auto-deactivation).

8.2.8 BellSouth shall provide priority updates to LIDB for DPI data upon DPI's request (e.g., to support fraud detection)**,** via password-protected telephone card, facsimile, or electronic mail within one hour of notice from the established BellSouth contact.

8.2.9 BellSouth shall provide LIDB systems such that no more than 0.01% of DPI customer records will be missing from LIDB, as measured by DPI audits. BellSouth will audit DPI records in LIDB against DBAS to identify record mismatches and provide this data to a designated DPI contact person to resolve the status of the records and BellSouth will update system appropriately. BellSouth will refer record of mis-matches to DPI within one business day of audit. Once reconciled records are received back from DPI, BellSouth will update LIDB the same business day if less than 500 records are received before 1:00PM Central Time. If more than 500 records are received, BellSouth will contact DPI to negotiate a time frame for the updates, not to exceed three business days.

8.2.10 BellSouth shall perform backup and recovery of all of DPI's data in LIDB including sending to LIDB all changes made since the date of the most recent backup copy, in at least the same time frame BellSouth performs backup and recovery of BellSouth data in LIDB for itself. Currently, BellSouth performs backups of the LIDB for itself on a weekly basis; and when a new software release is scheduled, a backup is performed prior to loading the new release.

8.2.11 BellSouth shall provide DPI with LIDB reports of data which are missing or contain errors, as well as any misrouted errors, within a reasonable time period as negotiated between DPI and BellSouth.

8.2.12 BellSouth shall prevent any access to or use of DPI data in LIDB by BellSouth personnel that are outside of established administrative and fraud control personnel, or by any other Party that is not authorized by DPI in writing.

8.2.13 BellSouth shall provide DPI performance of the LIDB Data Screening function, which allows a LIDB to completely or partially deny specific query originators access to LIDB data owned by specific data owners, for Customer Data that is part of an NPA-NXX or RAO-0/1XX wholly or partially owned by DPI at least at parity with BellSouth Customer Data. BellSouth shall obtain from DPI the screening information associated with LIDB Data Screening of DPI data in accordance with this requirement. BellSouth currently does not have LIDB Data Screening capabilities. When such capability is available, BellSouth shall offer it to DPI under the BFR/NBR process as set forth in Attachment 11.

8.2.14 BellSouth shall accept queries to LIDB associated with DPI customer records and shall return responses in accordance with industry standards.

8.2.15 BellSouth shall provide mean processing time at the LIDB within 0.50 seconds under normal conditions as defined in industry standards.

8.2.16 BellSouth shall provide processing time at the LIDB within 1 second for 99% of all messages under normal conditions as defined in industry standards.

8.3 Interface Requirements

8.3.1 BellSouth shall offer LIDB in accordance with the requirements of this subsection.

8.3.2 The interface to LIDB shall be in accordance with the technical references contained within.

8.3.3 The CCS interface to LIDB shall be the standard interface described herein.

8.3.4 The LIDB Data Base interpretation of the ANSI-TCAP messages shall comply with the technical reference herein. Global Title Translation shall be maintained in the signaling network in order to support signaling network routing to the LIDB.

8.3.5 The application of the LIDB rates contained in Exhibit B to this Attachment will be based on a Percent CLEC LIDB Usage (PCLU) factor. DPI shall provide BellSouth a PCLU. The PCLU will be applied to determine the percentage of total LIDB usage to be billed to the other Party at local rates. DPI shall update its PCLU on the first of January, April, July and October and shall send it to BellSouth to be received no later than thirty (30) calendar days after the first of each such month based on local usage for the past three months ending the last day of December, March, June and September, respectively. Requirements associated with PCLU calculation and reporting shall be as set forth in BellSouth's Jurisdictional Factors Reporting Guide, as it is amended from time to time.

9 Signaling

9.1 BellSouth shall offer access to signaling and access to BellSouth's signaling databases subject to compatibility testing and at the rates set forth in this

Attachment. BellSouth may provide mediated access to BellSouth signaling systems and databases. Available signaling elements include signaling links, signal transfer points and service control points. Signaling functionality will be available with both A-link and B-link connectivity.

9.2 **Signaling Link Transport**

9.2.1 Signaling Link Transport is a set of two or four dedicated 56 kbps transmission paths between DPI-designated Signaling Points of Interconnection that provide appropriate physical diversity.

9.2.2 Technical Requirements

9.2.3 Signaling Link Transport shall consist of full duplex mode 56 kbps transmission paths and shall perform in the following two ways:

9.2.3.1 As an "A-link" Signaling Link Transport is a connection between a switch or SCP and a home Signaling Transfer Point switch pair; and

9.2.3.2 As a "B-link" Signaling Link Transport is a connection between two Signaling Transfer Point switch pairs in different company networks (e.g., between two Signaling Transfer Point switch pairs for two CLECs).

9.2.4 Signaling Link Transport shall consist of two or more signaling link layers as follows:

9.2.4.1 An A-link layer shall consist of two links.

9.2.4.2 A B-link layer shall consist of four links.

9.2.4.3 A signaling link layer shall satisfy interoffice and intraoffice diversity of facilities and equipment, such that:

9.2.4.4 No single failure of facilities or equipment causes the failure of both links in an A-link layer (i.e., the links should be provided on a minimum of two separate physical paths end-to-end); and

9.2.4.5 No two concurrent failures of facilities or equipment shall cause the failure of all four links in a B-link layer (i.e., the links should be provided on a minimum of three separate physical paths end-to-end).

9.2.5 Interface Requirements

9.2.5.1 There shall be a DS1 (1.544 Mbps) interface at DPI's designated SPOIs. Each 56 kbps transmission path shall appear as a DS0 channel within the DS1 interface.

9.3 **Signaling Transfer Points (STPs)**

9.3.1 A Signaling Transfer Point is a signaling network function that includes all of the capabilities provided by the signaling transfer point switches (STPs) and their associated signaling links that enables the exchange of SS7 messages among and between switching elements, database elements and signaling transfer point switches.

9.3.2 Technical Requirements

9.3.2.1 Signaling Transfer Point s shall provide access to BellSouth Local Switching or Tandem Switching and to BellSouth Service Control Points/Databases connected to BellSouth SS7 network. Signaling Transfer Point also provide access to third-party local or tandem switching and Third-party-provided Signaling Transfer Points.

9.3.2.2 The connectivity provided by Signaling Transfer Points shall fully support the functions of all other Network Elements connected to the BellSouth SS7 network. This includes the use of the BellSouth SS7 network to convey messages that neither originate nor terminate at a signaling end point directly connected to the BellSouth SS7 network (i.e., transit messages). When the BellSouth SS7 network is used to convey transit messages, there shall be no alteration of the Integrated Services Digital Network User Part or Transaction Capabilities Application Part (TCAP) user data that constitutes the content of the message.

9.3.2.3 If a BellSouth tandem switch routes traffic, based on dialed or translated digits, on SS7 trunks between a DPI local switch and third party local switch, the BellSouth SS7 network shall convey the TCAP messages that are necessary to provide Call Management features (Automatic Callback, Automatic Recall, and Screening List Editing) between DPI local STPs and the STPs that provide connectivity with the third party local switch, even if the third party local switch is not directly connected to BellSouth STPs.

9.3.2.4 STPs shall provide all functions of the SCCP necessary for Class 0 (basic connectionless) service as defined in Telcordia ANSI Interconnection Requirements. This includes Global Title Translation (GTT) and SCCP Management procedures, as specified in ANSI T1.112.4. Where the destination signaling point is a DPI or third party local or tandem switching system directly connected to BellSouth SS7 network, BellSouth shall perform final GTT of messages to the destination and SCCP Subsystem Management of the destination. In all other cases, BellSouth shall perform intermediate GTT of messages to a gateway pair of STPs in an SS7 network connected with BellSouth SS7 network and shall not perform SCCP Subsystem Management of the destination. If BellSouth performs final GTT to a DPI database, then DPI agrees to provide BellSouth with the Destination Point Code for DPI database.

9.3.2.5 STPs shall provide all functions of the OMAP as specified in applicable industry standard technical references, which may include, where available in BellSouth's

network, MTP Routing Verification Test (MRVT) and SCCP Routing Verification Test (SRVT).

9.3.2.6 Where the destination signaling point is a BellSouth local or tandem switching system or database, or is a DPI or third party local or tandem switching system directly connected to the BellSouth SS7 network, STPs shall perform MRVT and SRVT to the destination signaling point. In all other cases, STPs shall perform MRVT and SRVT to a gateway pair of STPs in an SS7 network connected with the BellSouth SS7 network. This requirement may be superseded by the specifications for Internetwork MRVT and SRVT when these become approved ANSI standards and available capabilities of BellSouth STPs.

9.4 **SS7 Advanced Intelligent Network (AIN) Access**

9.4.1 When technically feasible and upon request by DPI, SS7 AIN Access shall be made available in association with switching. SS7 AIN Access is the provisioning of AIN 0.1 triggers in an equipped BellSouth local switch and interconnection of the BellSouth SS7 network with DPI's SS7 network to exchange TCAP queries and responses with a DPI SCP.

9.4.2 SS7 AIN Access shall provide DPI SCP access to an equipped BellSouth local switch via interconnection of BellSouth's SS7 and DPI SS7 Networks. BellSouth shall offer SS7 AIN Access through its STPs. If BellSouth requires a mediation device on any part of its network specific to this form of access, BellSouth must route its messages in the same manner. The interconnection arrangement shall result in the BellSouth local switch recognizing the DPI SCP as at least at parity with BellSouth's SCPs in terms of interfaces, performance and capabilities.

9.4.3 Interface Requirements

9.4.3.1 BellSouth shall provide the following STP options to connect DPI or DPI-designated local switching systems to the BellSouth SS7 network:

9.4.3.1.1 An A-link interface from DPI local switching systems; and,

9.4.3.1.2 A B-link interface from DPI local STPs.

9.4.3.2 Each type of interface shall be provided by one or more layers of signaling links.

9.4.3.3 The Signaling Point of Interconnection for each link shall be located at a cross-connect element in the Central Office (CO) where the BellSouth STP is located. There shall be a DS1 or higher rate transport interface at each of the SPOIs. Each signaling link shall appear as a DS0 channel within the DS1 or higher rate interface.

9.4.3.4 BellSouth shall provide intraoffice diversity between the Signaling Point of Interconnection and BellSouth STPs so that no single failure of intraoffice facilities

or equipment shall cause the failure of both B-links in a layer connecting to a BellSouth STP.

9.4.3.5 STPs shall provide all functions of the MTP as defined in the applicable industry standard technical references.

9.4.4 Message Screening

9.4.4.1 BellSouth shall set message screening parameters so as to accept valid messages from DPI local or tandem switching systems destined to any signaling point within BellSouth's SS7 network where the DPI switching system has a valid signaling relationship.

9.4.4.2 BellSouth shall set message screening parameters so as to pass valid messages from DPI local or tandem switching systems destined to any signaling point or network accessed through BellSouth's SS7 network where the DPI switching system has a valid signaling relationship.

9.4.4.3 BellSouth shall set message screening parameters so as to accept and pass/send valid messages destined to and from DPI from any signaling point or network interconnected through BellSouth's SS7 network where the DPI SCP has a valid signaling relationship.

9.5 **Service Control Points/Databases**

9.5.1 Call Related Databases provide the storage of, access to, and manipulation of information required to offer a particular service and/or capability. BellSouth shall provide access to the following Databases: Local Number Portability, LIDB, Toll Free Number Database, Automatic Location Identification/Data Management System, and Calling Name Database. BellSouth also provides access to Service Creation Environment and Service Management System (SCE/SMS) application databases and Directory Assistance.

9.5.2 A Service Control Point (SCP) is deployed in a SS7 network that executes service application logic in response to SS7 queries sent to it by a switching system also connected to the SS7 network. Service Management Systems provide operational interfaces to allow for provisioning, administration and maintenance of subscriber data and service application data stored in SCPs.

9.5.3 Technical Requirements for SCPs/Databases

9.5.3.1 BellSouth shall provide physical access to SCPs through the SS7 network and protocols with TCAP as the application layer protocol.

9.5.3.2 BellSouth shall provide physical interconnection to databases via industry standard interfaces and protocols (e.g. SS7, ISDN and X.25).

9.5.3.3 The reliability of interconnection options shall be consistent with requirements for diversity and survivability.

9.6 **Local Number Portability Database**

9.6.1 The Permanent Number Portability (PNP) database supplies routing numbers for calls involving numbers that have been ported from one local service provider to another. BellSouth agrees to provide access to the PNP database at rates, terms and conditions as set forth by BellSouth and in accordance with an effective FCC or Commission directive.

9.7 **SS7 Network Interconnection**

9.7.1 SS7 Network Interconnection is the interconnection of DPI local signaling transfer point switches or DPI local or tandem switching systems with BellSouth signaling transfer point switches. This interconnection provides connectivity that enables the exchange of SS7 messages among BellSouth switching systems and databases, DPI local or tandem switching systems, and other third-party switching systems directly connected to the BellSouth SS7 network.

9.7.2 The connectivity provided by SS7 Network Interconnection shall fully support the functions of BellSouth switching systems and databases and DPI or other third-party switching systems with A-link access to the BellSouth SS7 network.

9.7.3 If traffic is routed based on dialed or translated digits between a DPI local switching system and a BellSouth or other third-party local switching system, either directly or via a BellSouth tandem switching system, then it is a requirement that the BellSouth SS7 network convey via SS7 Network Interconnection the TCAP messages that are necessary to provide Call Management services (Automatic Callback, Automatic Recall, and Screening List Editing) between the DPI local signaling transfer point switches and BellSouth or other third-party local switch.

9.7.4 SS7 Network Interconnection shall provide:

9.7.4.1 Signaling Data Link functions, as specified in ANSI T1.111.2;

9.7.4.2 Signaling Link functions, as specified in ANSI T1.111.3; and

9.7.4.3 Signaling Network Management functions, as specified in ANSI T1.111.4.

9.7.5 SS7 Network Interconnection shall provide all functions of the SCCP necessary for Class 0 (basic connectionless) service as specified in ANSI T1.112. This includes Global Title Translation (GTT) and SCCP Management procedures as specified in ANSI T1.112.4. Where the destination signaling point is a BellSouth switching system or DB, or is another third-party local or tandem switching system directly connected to the BellSouth SS7 network, SS7 Network Interconnection

shall include final GTT of messages to the destination and SCCP Subsystem Management of the destination. Where the destination signaling point is a DPI local or tandem switching system, SS7 Network Interconnection shall include intermediate GTT of messages to a gateway pair of DPI local STPs and shall not include SCCP Subsystem Management of the destination.

9.7.6 SS7 Network Interconnection shall provide all functions of the Integrated Services Digital Network User Part as specified in ANSI T1.113.

9.7.7 SS7 Network Interconnection shall provide all functions of the TCAP as specified in ANSI T1.114.

9.7.8 If Internetwork MRVT and SRVT become approved ANSI standards and available capabilities of BellSouth STPs, SS7 Network Interconnection may provide these functions of the OMAP.

9.7.9 Interface Requirements

9.7.9.1 The following SS7 Network Interconnection interface options are available to connect DPI or DPI-designated local or tandem switching systems or signaling transfer point switches to the BellSouth SS7 network:

9.7.9.1.1 A-link interface from DPI local or tandem switching systems; and

9.7.9.1.2 B-link interface from DPI STPs.

9.7.9.2 The Signaling Point of Interconnection for each link shall be located at a cross-connect element in the central office where the BellSouth STP is located. There shall be a DS1 or higher rate transport interface at each of the Signaling Points of interconnection. Each signaling link shall appear as a DS0 channel within the DS1 or higher rate interface.

9.7.9.3 BellSouth shall provide intraoffice diversity between the Signaling Points of Interconnection and the BellSouth STP, so that no single failure of intraoffice facilities or equipment shall cause the failure of both B-links in a layer connecting to a BellSouth STP.

9.7.9.4 The protocol interface requirements for SS7 Network Interconnection include the MTP, ISDNUP, SCCP, and TCAP. These protocol interfaces shall conform to the applicable industry standard technical references.

9.7.9.5 BellSouth shall set message screening parameters to accept messages from DPI local or tandem switching systems destined to any signaling point in the BellSouth SS7 network with which the DPI switching system has a valid signaling relationship.

10 Operator Services (Operator Call Processing and Directory Assistance)

10.1 Operator Call Processing (OCP) provides: (1) operator handling for call completion (for example, collect, third number billing, and manual calling-card calls); (2) operator or automated assistance for billing after the end user has dialed the called number (for example, calling card calls); and (3) special services including but not limited to Busy Line Verification and Emergency Line Interrupt (ELI), Emergency Agency Call, and Operator-assisted Directory Assistance.

10.1.1 Upon request for BellSouth OCP, BellSouth shall:

10.1.2 Process 0+ and 0- dialed local calls.

10.1.3 Process 0+ and 0- intraLATA toll calls.

10.1.4 Process calls that are billed to DPI end user's calling card that can be validated by BellSouth.

10.1.5 Process person-to-person calls.

10.1.6 Process collect calls.

10.1.7 Provide the capability for callers to bill to a third party and shall also process such calls.

10.1.8 Process station-to-station calls.

10.1.9 Process Busy Line Verify and Emergency Line Interrupt requests.

10.1.10 Process emergency call trace originated by Public Safety Answering Points.

10.1.11 Process operator-assisted directory assistance calls.

10.1.12 Adhere to equal access requirements**,** providing DPI local end users the same IXC access as provided to BellSouth end users.

10.1.13 Exercise at least the same level of fraud control in providing Operator Service to DPI that BellSouth provides for its own operator service.

10.1.14 Perform Billed Number Screening when handling Collect, Person-to-Person, and Billed-to-Third-Party calls.

10.1.15 Direct customer account and other similar inquiries to the customer service center designated by DPI.

10.1.16 Provide call records to DPI in accordance with ODUF standards specified in Attachment 7.

10.1.17 The interface requirements shall conform to the interface specifications for the platform used to provide Operator Services as long as the interface conforms to industry standards.

10.2 **Directory Assistance Service**

10.2.1 Directory Assistance (DA) Service provides local and non-local end user telephone number listings with the option to complete the call at the caller's direction separate and distinct from local switching.

10.2.2 DA Service shall provide up to two listing requests per call. If available and if requested by DPI's end user, BellSouth shall provide caller-optional directory assistance call completion service at rates contained in this Attachment to one of the provided listings.

10.3 DA Service Updates

10.3.1 BellSouth shall update end user listings changes daily. These changes include:

10.3.2 New end user connections;

10.3.3 End user disconnections;

10.3.4 End user address changes.

10.3.5 These updates shall also be provided for non-listed and non-published numbers for use in emergencies.

10.4 **Branding for Operator Call Processing and Directory Assistance**

10.4.1 BellSouth's branding feature provides a definable announcement to DPI end users using DA/OCP prior to placing such end users in queue or connecting them to an available operator or automated operator system. This feature allows DPI to have its calls custom branded with DPI's name on whose behalf BellSouth is providing DA and/or OCP. Rates for the branding features are set forth in this Attachment.

10.4.2 BellSouth offers three branding offering options to DPI when ordering BellSouth's DA and OCP: BellSouth Branding, Unbranding and Custom Branding.

10.4.3 Upon receipt of the custom branding order from DPI, the order is considered firm after ten business days. Should DPI decide to cancel the order, written notification to DPI's Local Contract Manager is required. If DPI decides to cancel after ten business days from receipt of the custom branding order, DPI shall pay all charges per the order.

10.4.4 **UNE Provider Branding via Originating Line Number Screening (OLNS)**

10.4.4.1 BellSouth Branding, Unbranding and Custom Branding are also available for DA, OCP or both via Originating Line Number Screening (OLNS) software. When utilizing this method of Unbranding or Custom Branding, DPI shall not be required to purchase dedicated trunking.

10.4.4.2 BellSouth Branding is the default branding offering.

10.4.4.3 For BellSouth to provide Unbranding or Custom Branding via OLNS software for OCP or for DA, DPI must have its Operating Company Number (OCN(s)) and telephone numbers reside in BellSouth's LIDB; however, a BellSouth LIDB Storage Agreement is not required. To implement Unbranding and Custom Branding via OLNS software, DPI must submit a manual order form which requires, among other things, DPI's OCN and a forecast for the traffic volume anticipated for each BellSouth TOPS during the peak busy hour. DPI shall provide updates to such forecast on a quarterly basis and at any time such forecasted traffic volumes are expected to change significantly. Upon DPI's purchase of Unbranding or Custom Branding using OLNS software for any particular TOPS, all DPI end users served by that TOPS will receive the Unbranded "no announcement" or the Custom Branded announcement.

10.4.4.4 Rates for Unbranding and Custom Branding via OLNS software for DA and for OCP are as set forth in this Attachment. In addition to the charges for Unbranding and Custom Branding via OLNS software, DPI shall continue to pay BellSouth applicable labor and other charges for the use of BellSouth's DA and OCP platforms as set forth in this Attachment. Further, where DPI is purchasing unbundled local switching from BellSouth, UNE usage charges for end office switching, tandem switching and transport, as applicable, shall continue to apply.

10.4.5 **Facilities Based Carrier Branding**

10.4.5.1 All Service Levels require DPI to order dedicated trunking from their end office(s) point of interface to the BellSouth TOPS Switches. Rates for trunks are set forth in applicable BellSouth tariffs.

10.4.5.2 Unbranding is the default branding offering.

10.4.5.3 Rates for Custom Branded OCP/DA are set forth in this Attachment.

10.4.6 **Selective Call Routing Using Line Class Codes (SCR-LCC)**

10.4.6.1 Where DPI purchases unbundled local switching from BellSouth and utilizes an Operator Services Provider other than BellSouth, BellSouth will route DPI's end user calls to that provider through Selective Call Routing.

10.4.6.2 Selective Call Routing using Line Class Codes (SCR-LCC) provides the capability for DPI to have its OCP/DA calls routed to BellSouth's OCP/DA platform for BellSouth provided Custom Branded or Unbranded OCP/DA or to its own or an

alternate OCP/DA platform for Self-Branded OCP/DA. SCR-LCC is only available if line class code capacity is available in the requested BellSouth end office switches.

10.4.6.3 Custom Branding for DA is not available for certain classes of service, including but not limited to Hotel/Motel services, WATS service, and certain PBX services.

10.4.6.4 Where available, DPI specific and unique line class codes are programmed in each BellSouth end office switch where DPI intends to serve end users with customized OCP/DA branding. The line class codes specifically identify DPI's end users so OCP/DA calls can be routed over the appropriate trunk group to the requested OCP/DA platform. Additional line class codes are required in each end office if the end office serves multiple NPAs (i.e., a unique LCC is required per NPA), and/or if the end office switch serves multiple rate areas and DPI intends to provide DPI -branded OCP/DA to its end users in these multiple rate areas.

10.4.6.5 BellSouth Branding is the default branding offering.

10.4.6.6 SCR-LCC supporting Custom Branding and Self Branding require DPI to order dedicated trunking from each BellSouth end office identified by DPI, either to the BellSouth Traffic Operator Position System (TOPS) for Custom Branding or to the DPI Operator Service Provider for Self Branding. Separate trunk groups are required for Operator Services and for Directory Assistance. Rates for trunks are set forth in applicable BellSouth tariffs.

10.4.6.7 Unbranding - Unbranded DA and/or OCP calls ride common trunk groups provisioned by BellSouth from those end offices identified by DPI to the BellSouth TOPS. These calls are routed to "No Announcement."

10.4.6.8 The Rates for SCR-LCC are as set forth in this Attachment. There is a nonrecurring charge for the establishment of each Line Class Code in each BellSouth central office. Furthermore, for Unbranded and Custom Branded OCP/DA provided by BellSouth Operator Services with unbundled ports and unbundled port/Loop switch combinations, monthly recurring usage charges shall apply for the UNEs necessary to provide the service, such as end office and tandem switching and common transport. A flat rated end office switching charge shall apply to Self-Branded OCP/DA when used in conjunction with unbundled ports and unbundled port/Loop switch combinations.

10.4.7 Customized Branding includes charges for the recording of the branding announcement and the loading of the audio units in each TOPS Switch and Network Applications Vehicle (NAV) equipment for which DPI requires service.

10.4.7.1 Directory Assistance customized branding uses:

10.4.7.2 the recording of DPI;

10.4.7.3 the loading of the recording in each switch.

10.4.7.4 Operator Call Processing customized branding uses:

10.4.7.5 the recording of DPI;

10.4.7.6 the loading of the recording in each switch (North Carolina);

10.4.7.7 the loading on the Network Applications Vehicle (NAV). All NAV shelves within the region where the customer is offering service must be loaded.

10.5 **Directory Assistance Database Service (DADS)**

10.5.1 BellSouth shall make its Directory Assistance Database Service (DADS) available at the rates set forth in this Attachment solely for the expressed purpose of providing Directory Assistance type services to DPI end users. The term "end user" denotes any entity that obtains Directory Assistance type services for its own use from a DADS customer. Directory Assistance type service is defined as Voice Directory Assistance (DA Operator assisted) and Electronic Directory Assistance (Data System assisted). DPI agrees that DADS will not be used for any purpose that violates federal or state laws, statutes, regulatory orders or tariffs. For the purposes of provisioning a Directory Assistance type service, all terms and conditions of GSST A38 apply and are incorporated by reference herein. Except for the permitted uses, DPI agrees not to disclose DADS to others and shall provide due care in providing for the security and confidentiality of DADS.

10.5.2 BellSouth shall initially provide DPI with a Base File of subscriber listings via magnetic tape. DADS is available and may be ordered on a Business, Residence or combined Business and Residence listings basis for each central office requested. BellSouth will require approximately 30-45 days after receiving an order from DPI to prepare the Base File.

10.5.3 BellSouth will provide updates on either a daily or weekly basis reflecting all listing change activity occurring since DPI's previous update. Delivery of updates will commence immediately after DPI receives the Base File. Updates will be provided via magnetic tape unless BellSouth and DPI mutually develop CONNECT: Direct ™ electronic connectivity. DPI will pay all costs associated with CONNECT: Direct ™ connectivity, which will vary depending upon volume and mileage.

10.5.4 DPI authorizes the inclusion of DPI Directory Assistance listings in the BellSouth Directory Assistance products including but not limited to DADS. Any other use is not authorized.

10.6 **Direct Access to Directory Assistance Service**

10.6.1 Direct Access to Directory Assistance Service (DADAS) will provide DPI's directory assistance operators with the ability to search, using a standard directory assistance search format, the same listing information that is available to BellSouth operators including all available BellSouth subscriber listings, all available listings associated with lines resold by competitive local exchange carriers, and all available listings associated with lines provisioned by local exchange carriers that provide their listings to BellSouth. DADAS will also provide DPI with the ability to search all listings BellSouth obtains from sources other than the provider of the local exchange lines associated with the listings. The search format will be provided to DPI by BellSouth upon subscription to the service. Subscription to DADAS requires that DPI utilize its own switch, operator workstations, directory assistance operators, transport facilities, and optional audio subsystems.

10.6.2 Rates, terms and conditions for provisioning DADAS are as set forth in the FCC Tariff No. 1.

11 Automatic Location Identification/Data Management System (ALI/DMS)

11.1 The ALI/DMS Database contains end user information (including name, address, telephone information, and sometimes special information from the local service provider or end user) used to determine to which Public Safety Answering Point (PSAP) to route the call. The ALI/DMS database is used to provide enhanced routing flexibility for E911.

11.2 Technical Requirements

11.2.1 BellSouth shall provide DPI the capability of providing updates to the ALI/DMS database. BellSouth shall provide error reports from the ALI/DMS database to DPI after DPI provides end user information for input into the ALI/DMS database.

11.2.2 DPI shall conform to the National Emergency Number Association (NENA) recommended standards for Local Number Portability and updating the ALI/DMS database.

12 Calling Name (CNAM) Database Service

12.1 CNAM is the ability to associate a name with the calling party number, allowing the end user (to which a call is being terminated) to view the calling party's name before the call is answered. This service also provides DPI the opportunity to load and store its subscriber names in the BellSouth CNAM SCPs.

12.2 DPI shall submit to BellSouth a notice of its intent to access and utilize BellSouth CNAM Database Services. Said notice shall be in writing no less than 60 days prior to DPI's access to BellSouth's CNAM Database Services and shall be addressed to DPI's Local Contract Manager.

12.3 BellSouth's provision of CNAM Database Services to DPI requires interconnection from DPI to BellSouth CNAM Service Control Points (SCPs). Such interconnections shall be established pursuant to Attachment 3 of this Agreement, incorporated herein by this reference.

12.4 In order to formulate a CNAM query to be sent to the BellSouth CNAM SCP, DPI shall provide its own CNAM SSP. DPI's CNAM SSPs must be compliant with TR-NWT-001188, "CLASS Calling Name Delivery Generic Requirements".

12.5 If DPI elects to access the BellSouth CNAM SCP via a third party CCS7 transport provider, the third party CCS7 provider shall interconnect with the BellSouth CCS7 network according to BellSouth's Common Channel Signaling Interconnection Guidelines and Telcordia's CCS Network Interface Specification document, TR-TSV-000905. In addition, the third party provider shall establish CCS7 interconnection at the BellSouth Local Signal Transfer Points (LSTPs) serving the BellSouth CNAM SCPs that DPI desires to query.

12.6 If DPI queries the BellSouth CNAM SCP via a third party national SS7 transport provider, the third party SS7 provider shall interconnect with the BellSouth CCS7 network according to BellSouth's Common Channel Signaling Interconnection Guidelines and Telcordia's CCS Network Interface Specification document, TR-TSV-000905. In addition, the third party provider shall establish SS7 interconnection at one or more of the BellSouth Gateway Signal Transfer Points (STPs). The payment of all costs associated with the transport of SS7 signals via a third party will be established by mutual agreement of the Parties and this Agreement shall be amended in accordance with modification of the General Terms and Conditions incorporated herein by this reference.

12.7 The mechanism to be used by DPI for initial CNAM record load and/or updates shall be determined by mutual agreement. The initial load and all updates shall be provided by DPI in the BellSouth specified format and shall contain records for every working telephone number that can originate phone calls. It is the responsibility of DPI to provide accurate information to BellSouth on a current basis.

12.8 Updates to the SMS shall occur no less than once a week, reflect service order activity affecting either name or telephone number, and involve only record additions, deletions or changes.

12.9 DPI CNAM records provided for storage in the BellSouth CNAM SCP shall be available, on a SCP query basis only, to all Parties querying the BellSouth CNAM SCP. Further, CNAM service shall be provided by each Party consistent with state and/or federal regulation.

13 Service Creation Environment and Service Management System (SCE/SMS) Advanced Intelligent Network (AIN) Access

13.1 BellSouth's Service Creation Environment and Service Management System (SCE/SMS) Advanced Intelligent Network (AIN) Access shall provide DPI the capability to create service applications in a BellSouth SCE and deploy those applications in a BellSouth SMS to a BellSouth SCP.

13.2 BellSouth's SCE/SMS AIN Access shall provide access to SCE hardware, software, testing and technical support (e.g., help desk, system administrator) resources available to DPI. Training, documentation, and technical support will address use of SCE and SMS access and administrative functions but will not include support for the creation of a specific service application.

13.3 BellSouth SCP shall partition and protect DPI service logic and data from unauthorized access.

13.4 When DPI selects SCE/SMS AIN Access, BellSouth shall provide training, documentation, and technical support to enable DPI to use BellSouth's SCE/SMS AIN Access to create and administer applications.

13.5 DPI access will be provided via remote data connection (e.g., dial-in, ISDN).

13.6 BellSouth shall allow DPI to download data forms and/or tables to BellSouth SCP via BellSouth SMS without intervention from BellSouth.

14 Basic 911 and E911

14.1 Basic 911 and E911 provides a caller access to the applicable emergency service bureau by dialing 911.

14.2 Basic 911 Service Provisioning. BellSouth will provide to DPI a list consisting of each municipality that subscribes to Basic 911 service. The list will also provide, if known, the E911 conversion date for each municipality and, for network routing purposes, a ten-digit directory number representing the appropriate emergency answering position for each municipality subscribing to 911. DPI will be required to arrange to accept 911 calls from its end users in municipalities that subscribe to Basic 911 service and translate the 911 call to the appropriate 10-digit directory number as stated on the list provided by BellSouth. DPI will be required to route that call to BellSouth at the appropriate tandem or end office. When a municipality converts to E911 service, DPI will be required to begin using E911 procedures.

14.3 E911 Service Provisioning. DPI shall install a minimum of two dedicated trunks originating from the DPI serving wire center and terminating to the appropriate E911 tandem. The dedicated trunks shall be, at a minimum, DS0 level trunks configured either as a 2-wire analog interface or as part of a digital (1.544 Mb/s) interface. Either configuration shall use CAMA-type signaling with multifrequency (MF) pulsing that will deliver automatic number identification (ANI) with the voice portion of the call. If the user interface is digital, MF pulses as well as other

AC signals shall be encoded per the u-255 Law convention. DPI will be required to provide BellSouth daily updates to the E911 database. DPI will be required to forward 911 calls to the appropriate E911 tandem along with ANI based upon the current E911 end office to tandem homing arrangement as provided by BellSouth. If the E911 tandem trunks are not available, DPI will be required to route the call to a designated 7-digit local number residing in the appropriate Public Service Answering Point (PSAP). This call will be transported over BellSouth's interoffice network and will not carry the ANI of the calling party. DPI shall be responsible for providing BellSouth with complete and accurate data for submission to the 911/E911 database for the purpose of providing 911/E911 to its end users.

14.4 Rates. Charges for 911/E911 service are borne by the municipality purchasing the service. BellSouth will impose no charge on DPI beyond applicable charges for BellSouth trunking arrangements.

14.5 Basic 911 and E911 functions provided to DPI shall be at least at parity with the support and services that BellSouth provides to its end users for such similar functionality.

14.6 The detailed practices and procedures for 911/E911 services are contained in the E911 Local Exchange Carrier Guide For Facility-Based Providers as amended from time to time during the term of this Agreement.

15 Operational Support Systems (OSS)

15.1 BellSouth has developed and made available the following electronic interfaces by which DPI may submit LSRs electronically.

LENS	Local Exchange Navigation System
EDI	Electronic Data Interchange
TAG	Telecommunications Access Gateway

15.2 LSRs submitted by means of one of these electronic interfaces will incur an OSS electronic ordering charge. An individual LSR will be identified for billing purposes by its Purchase Order Number (PON). LSRs submitted by means other than one of these interactive interfaces (mail, fax, courier, etc.) will incur a manual order charge. All OSS charges are specified in Rate Exhibit B of this Attachment 2.

15.3 Denial/Restoral OSS Charge

15.3.1 In the event DPI provides a list of customers to be denied and restored, rather than an LSR, each location on the list will require a separate PON and therefore will be billed as one LSR per location.

15.4 Cancellation OSS Charge

15.4.1 DPI will incur an OSS charge for an accepted LSR that is later canceled.

15.5 Supplements or clarifications to a previously billed LSR will not incur another OSS charge.

15.6 Network Elements and Other Services Manual Additive

15.6.1 The Commissions in some states have ordered per-element manual additive nonrecurring charges (NRC) for Network Elements and Other Services ordered by means other than one of the interactive interfaces. These ordered Network Elements and Other Services manual additive NRCs will apply in these states, rather than the charge per LSR. The per-element charges are listed on the Rate Tables in Exhibit B.

EXHIBIT A

LINE INFORMATION DATA BASE (LIDB)

FACILITIES BASED STORAGE AGREEMENT

I. Definitions

A. Billing number - a number that DPI creates for the purpose of identifying an account liable for charges. This number may be a line or a special billing number.

B. Line number - a ten-digit number that identifies a telephone line administered by DPI.

C. Special billing number - a ten-digit number that identifies a billing account established by DPI.

D. Calling Card number - a billing number plus PIN number.

E. PIN number - a four-digit security code assigned by DPI that is added to a billing number to compose a fourteen-digit calling card number.

F. Toll billing exception indicator - associated with a billing number to indicate that it is considered invalid for billing of collect calls or third number calls or both, by DPI.

G. Billed Number Screening - refers to the query service used to determine whether a toll billing exception indicator is present for a particular billing number.

H. Calling Card Validation - refers to the query service used to determine whether a particular calling card number exists as stated or otherwise provided by a caller.

I. Billing number information - information about billing number, Calling Card number and toll billing exception indicator provided to BellSouth by DPI.

J. Account Owner – name of the local exchange telecommunications company that is providing dialtone on a subscriber line.

K. GetData – refers to the query service used to determine, at a minimum, the Account Owner and/or Regional Accounting Office for a line number. This query service may be modified to provide additional information in the future.

L. Originating Line Number Screening (OLNS) – refers to the query service used to determine the billing, screening and call handling indicators, station type, and Account Owner provided to BellSouth by DPI for originating line numbers.

II. General

A. This Agreement sets forth the terms and conditions pursuant to which BellSouth agrees to store in its LIDB certain information at the request of DPI and pursuant to which BellSouth, its LIDB customers and DPI shall have access to such information. In addition, this Agreement sets forth the terms and conditions for DPI's provision of billing number information to BellSouth for inclusion in BellSouth's LIDB. DPI understands that BellSouth provides access to information in its LIDB to various telecommunications service providers pursuant to applicable tariffs and agrees that information stored at the request of DPI, pursuant to this Agreement, shall be available to those telecommunications service providers. The terms and conditions contained herein shall hereby be made a part of this Interconnection Agreement upon notice to DPI's account team and/or Local Contract Manager to activate this LIDB Storage Agreement. The General Terms and Conditions of the Interconnection/Resale Agreement shall govern this LIDB Storage Agreement.

B. BellSouth will provide responses to on-line, call-by-call queries to local exchange line and/or billing number information for the following purposes:

1. Billed Number Screening

   BellSouth is authorized to use the billing number information to determine whether DPI has identified the billing number as one that should not be billed for collect or third number calls.

2. Calling Card Validation

   BellSouth is authorized to validate a 14-digit Calling Card number where the first 10 digits are a line number or special billing number assigned by BellSouth and where the last four digits (PIN) are a security code assigned by BellSouth.

3. OLNS

   BellSouth is authorized to provide originating line screening information for billing and services restrictions, station type, and Account Owner on the lines of DPI from which a call originates.

4. GetData

   BellSouth is authorized to provide, at a minimum, the Account Owner and/or Regional Accounting Office information on the lines of DPI indicating the local service provider and where billing records are to be sent for settlement purposes. This query service may be modified to provide additional information in the future.

5. Fraud Control

   BellSouth will provide seven days per week, 24-hours per day, fraud monitoring on Calling Cards, bill-to-third and collect calls made to numbers in BellSouth's LIDB, provided that such information is included in the LIDB query. BellSouth

will establish fraud alert thresholds and will notify DPI of fraud alerts so that DPI may take action it deems appropriate.

III. Responsibilities of the Parties

A. BellSouth will administer all data stored in the LIDB, including the data provided by DPI pursuant to this Agreement, in the same manner as BellSouth's data for BellSouth's end user customers. BellSouth shall not be responsible to DPI for any lost revenue which may result from BellSouth's administration of the LIDB pursuant to its established practices and procedures as they exist and as they may be changed by BellSouth in its sole discretion from time to time.

B. Billing and Collection Customers

BellSouth currently has in effect numerous billing and collection agreements with various interexchange carriers and billing clearinghouses and as such these billing and collection customers (B&C Customers) query BellSouth's LIDB to determine whether to accept various billing options from end users. Until such time as BellSouth implements in its LIDB and its supporting systems the means to differentiate DPI's data from BellSouth's data, the following terms and conditions shall apply:

1. BellSouth will identify DPI's end user originated long distance charges and will return those charges to the interexchange carrier as not covered by the existing B&C agreement with interexchange carriers for handling of long distance charges by their end users.

2. BellSouth shall have no obligation to become involved in any disputes between DPI and B&C Customers. BellSouth will not issue adjustments for charges billed on behalf of any B&C Customer to DPI. It shall be the responsibility of DPI and the B&C Customers to negotiate and arrange for any appropriate adjustments.

IV. Fees for Service and Taxes

A. DPI will not be charged a fee for storage services provided by BellSouth to DPI as described in this LIDB Facilities Based Storage Agreement.

B. Sales, use and all other taxes (excluding taxes on BellSouth's income) determined by BellSouth or any taxing authority to be due to any federal, state or local taxing jurisdiction with respect to the provision of the service set forth herein will be paid by DPI in accordance with the tax provisions set forth in the General Terms and Conditions of this Agreement.

UNBUNDLED NETWORK ELEMENTS - Alabama														Attachment: 2		Exhibit: B	
CATEGORY		RATE ELEMENTS	Interim	Zone	BCS	USOC	RATES ($)					Svc Order Submitted Elec per LSR	Svc Order Submitted Manually per LSR	Incremental Charge - Manual Svc Order vs. Electronic-1st	Incremental Charge - Manual Svc Order vs. Electronic-Add'l	Incremental Charge - Manual Svc Order vs. Electronic-Disc 1st	Incremental Charge - Manual Svc Order vs. Electronic-Disc Add'l
							Rec	Nonrecurring		Nonrecurring Disconnect		OSS Rates($)					
								First	Add'l	First	Add'l	SOMEC	SOMAN	SOMAN	SOMAN	SOMAN	SOMAN
	The "Zone" shown in the sections for stand-alone loops or loops as part of a combination refers to Geographically Deaveraged UNE Zones. To view Geographically Deaveraged UNE Zone Designations by Central Office, refer to internet Website: http://www.interconnection.bellsouth.com/become_a_clec/html/interconnection.htm																
OPERATIONAL SUPPORT SYSTEMS																	
	NOTE: (1) Electronic Service Order: CLEC should contact its contract negotiator if it prefers the state specific electronic service ordering charges as ordered by the State Commissions. The electronic service ordering charge currently contained in this rate exhibit is the BellSouth regional electronic service ordering charge. CLEC may elect either the state specific Commission ordered rates for the electronic service ordering charges, or CLEC may elect the regional electronic service ordering charge.																
	NOTE: (2) Any element that can be ordered electronically will be billed according to the SOMEC rate listed in this category. Please refer to BellSouth's Business Rules for Local Ordering (BBR-LO) to determine if a product can be ordered electronically. For those elements that cannot be ordered electronically at present per the BBR-LO, the listed SOMEC rate in this category reflects the charge that would be billed to a CLEC once electronic ordering capabilities come on-line for that element. Otherwise, the manual ordering charge, SOMAN, will be applied to a CLECs bill when it submits an LSR to BellSouth.																
		Electronic OSS Charge, per LSR, submitted via BST's OSS interactive interfaces (Regional)				SOMEC		3.50									
		Manual Service Order Charge, per LSR, Disconnect Only (AL)				SOMAN				1.97							
UNE SERVICE DATE ADVANCEMENT CHARGE																	
	NOTE: The Expedite charge will be maintained commensurate with BellSouth's FCC No.1 Tariff, Section 5 as applicable.																
		UNE Expedite Charge per Circuit or Line Assignable USOC, per Day			UAL, UEANL, UCL, UEF, UDF, UEQ, UDL, UENTW, UDN, UEA, UHL, ULC, USL, U1T12, U1T48, U1TD1, U1TD3, U1TDX, U1TO3, U1TS1, U1TVX, UC1BC, UC1BL, UC1CC, UC1CL, UC1DC, UC1DL, UC1EC, UC1EL, UC1FC, UC1FL, UC1GC, UC1GL, UC1HC, UC1HL, UDL12, UDL48, UDLO3, UDLSX, UE3, ULD12, ULD48, ULDD1, ULDD3, ULDDX, ULDO3, ULDS1, ULDVX, UNC1X, UNC3X, UNCDX, UNCNX, UNCSX, UNCVX, UNLD1, UNLD3, UXTD1, UXTD3, UXTS1, U1TUC, U1TUD, U1TUB, U1TUA	SDASP		200.00									
UNBUNDLED EXCHANGE ACCESS LOOP																	
	2-WIRE ANALOG VOICE GRADE LOOP																
		2-Wire Analog Voice Grade Loop - Service Level 1- Zone 1		1	UEANL	UEAL2	12.58	37.81	17.56	23.49	5.30		15.66				
		2-Wire Analog Voice Grade Loop - Service Level 1- Zone 2		2	UEANL	UEAL2	21.05	37.81	17.56	23.49	5.30		15.66				
		2-Wire Analog Voice Grade Loop - Service Level 1- Zone 3		3	UEANL	UEAL2	34.34	37.81	17.56	23.49	5.30		15.66				
		Unbundled Miscellaneous Rate Element, Tag Loop at End User Premise			UEANL	URETL		8.33	0.83				15.66				
		Loop Testing - Basic 1st Half Hour			UEANL	URET1		34.16					15.66				
		Loop Testing - Basic Additional Half Hour			UEANL	URETA		19.85					15.66				
		CLEC to CLEC Conversion Charge Without Outside Dispatch (UVL-SL1)			UEANL	UREWO		15.78	8.94				15.66				
		Unbundled Voice Loop, Non-Design Voice Loop, billing for BST providing make-up (Engineering Information - E.I.)			UEANL	UEANM		13.44									
		Manual Order Coordination for UVL-SL1s (per loop)			UEANL	UEAMC		8.15									

UNBUNDLED NETWORK ELEMENTS - Alabama														Attachment: 2		Exhibit: B	
CATEGORY	RATE ELEMENTS	Interim	Zone	BCS	USOC	RATES ($)					Svc Order Submitted Elec per LSR	Svc Order Submitted Manually per LSR	Incremental Charge - Manual Svc Order vs. Electronic-1st	Incremental Charge - Manual Svc Order vs. Electronic-Add'l	Incremental Charge - Manual Svc Order vs. Electronic-Disc 1st	Incremental Charge - Manual Svc Order vs. Electronic-Disc Add'l
						Rec	Nonrecurring		Nonrecurring Disconnect		OSS Rates($)					
							First	Add'l	First	Add'l	SOMEC	SOMAN	SOMAN	SOMAN	SOMAN	SOMAN
	Order Coordination for Specified Conversion Time for UVL-SL1 (per LSR)			UEANL	OCOSL		18.09									
2-WIRE Unbundled COPPER LOOP																
	2-Wire Unbundled Copper Loop - Non-Designed Zone 1	I	1	UEQ	UEQ2X	11.20	34.14	15.10	21.25	4.15		15.66				
	2 Wire Unbundled Copper Loop - Non-Designed - Zone 2	I	2	UEQ	UEQ2X	13.27	34.14	15.10	21.25	4.15		15.66				
	2 Wire Unbundled Copper Loop - Non-Designed - Zone 3	I	3	UEQ	UEQ2X	15.07	34.14	15.10	21.25	4.15		15.66				
	Unbundled Miscellaneous Rate Element, Tag Loop at End User Premise			UEQ	URETL		8.33	0.83				15.66				
	Order Coordination 2 Wire Unbundled Copper Loop - Non-Designed (per loop)			UEQ	USBMC		8.15									
	Unbundled Copper Loop, Non-Design Copper Loop, billing for BST providing make-up (Engineering Information - E.I.)			UEQ	UEQMU		13.44					15.66				
	Loop Testing - Basic 1st Half Hour			UEQ	URET1		34.16					15.66				
	Loop Testing - Basic Additional Half Hour			UEQ	URETA		19.85					15.66				
	CLEC to CLEC Conversion Charge Without Outside Dispatch (UCL-ND)			UEQ	UREWO		14.27	7.43				15.66				
UNBUNDLED EXCHANGE ACCESS LOOP																
2-WIRE ANALOG VOICE GRADE LOOP																
	2 Wire Analog Voice Grade Loop-Service Level 1-Line Splitting-Zone 1		1	UEPSR UEPSB	UEALS	12.58	37.81	17.56	23.49	5.30		15.66				
	2 Wire Analog Voice Grade Loop-Service Level 1-Line Splitting-Zone 1		1	UEPSR UEPSB	UEABS	12.58	37.81	17.56	23.49	5.30		15.66				
	2 Wire Analog Voice Grade Loop- Service Level 1-Line Splitting-Zone 2		2	UEPSR UEPSB	UEALS	21.05	37.81	17.56	23.49	5.30		15.66				
	2 Wire Analog Voice Grade Loop- Service Level 1-Line Splitting-Zone 2		2	UEPSR UEPSB	UEABS	21.05	37.81	17.56	23.49	5.30		15.66				
	2 Wire Analog Voice Grade Loop-Service Level 1-Line Splitting-Zone 3		3	UEPSR UEPSB	UEALS	34.34	37.81	17.56	23.49	5.30		15.66				
	2 Wire Analog Voice Grade Loop-Service Level 1-Line Splitting-Zone 3		3	UEPSR UEPSB	UEABS	34.34	37.81	17.56	23.49	5.30		15.66				
UNBUNDLED EXCHANGE ACCESS LOOP																
2-WIRE ANALOG VOICE GRADE LOOP																
	2-Wire Analog Voice Grade Loop - Service Level 2 w/Loop or Ground Start Signaling - Zone 1		1	UEA	UEAL2	14.38	88.00	55.00	47.24	7.44		15.66				
	2-Wire Analog Voice Grade Loop - Service Level 2 w/Loop or Ground Start Signaling - Zone 2		2	UEA	UEAL2	22.85	88.00	55.00	47.24	7.44		15.66				
	2-Wire Analog Voice Grade Loop - Service Level 2 w/Loop or Ground Start Signaling - Zone 3		3	UEA	UEAL2	36.14	88.00	55.00	47.24	7.44		15.66				
	Order Coordination for Specified Conversion Time (per LSR)			UEA	OCOSL		18.09									
	2-Wire Analog Voice Grade Loop - Service Level 2 w/Reverse Battery Signaling - Zone 1		1	UEA	UEAR2	14.38	88.00	55.00	47.24	7.44		15.66				
	2-Wire Analog Voice Grade Loop - Service Level 2 w/Reverse Battery Signaling - Zone 2		2	UEA	UEAR2	22.85	88.00	55.00	47.24	7.44		15.66				
	2-Wire Analog Voice Grade Loop - Service Level 2 w/Reverse Battery Signaling - Zone 3		3	UEA	UEAR2	36.14	88.00	55.00	47.24	7.44		15.66				
	Order Coordination for Specified Conversion Time (per LSR)			UEA	OCOSL		18.09									
	CLEC to CLEC Conversion Charge without outside dispatch			UEA	UREWO		87.72	36.36				15.66				
	Loop Tagging - Service Level 2 (SL2)			UEA	URETL		11.21	1.10				15.66				
4-WIRE ANALOG VOICE GRADE LOOP																
	4-Wire Analog Voice Grade Loop - Zone 1		1	UEA	UEAL4	25.34	131.97	94.51	59.14	14.50		15.66				
	4-Wire Analog Voice Grade Loop - Zone 2		2	UEA	UEAL4	38.58	131.97	94.51	59.14	14.50		15.66				
	4-Wire Analog Voice Grade Loop - Zone 3		3	UEA	UEAL4	60.02	131.97	94.51	59.14	14.50		15.66				
	Order Coordination for Specified Conversion Time (per LSR)			UEA	OCOSL		18.09									
	CLEC to CLEC Conversion Charge without outside dispatch			UEA	UREWO		87.72	36.36				15.66				
2-WIRE ISDN DIGITAL GRADE LOOP																
	2-Wire ISDN Digital Grade Loop - Zone 1		1	UDN	U1L2X	21.88	117.24	79.77	52.88	10.54		15.66				
	2-Wire ISDN Digital Grade Loop - Zone 2		2	UDN	U1L2X	32.85	117.24	79.77	52.88	10.54		15.66				
	2-Wire ISDN Digital Grade Loop - Zone 3		3	UDN	U1L2X	48.55	117.24	79.77	52.88	10.54		15.66				
	Order Coordination For Specified Conversion Time (per LSR)			UDN	OCOSL		18.09									

UNBUNDLED NETWORK ELEMENTS - Alabama														Attachment: 2		Exhibit: B	
CATEGORY	RATE ELEMENTS	Interim	Zone	BCS	USOC	RATES ($)					Svc Order Submitted Elec per LSR	Svc Order Submitted Manually per LSR	Incremental Charge - Manual Svc Order vs. Electronic-1st	Incremental Charge - Manual Svc Order vs. Electronic-Add'l	Incremental Charge - Manual Svc Order vs. Electronic-Disc 1st	Incremental Charge - Manual Svc Order vs. Electronic-Disc Add'l
						Rec	Nonrecurring		Nonrecurring Disconnect		OSS Rates($)					
							First	Add'l	First	Add'l	SOMEC	SOMAN	SOMAN	SOMAN	SOMAN	SOMAN
	CLEC to CLEC Conversion Charge without outside dispatch			UDN	UREWO		91.63	44.16				15.66				
2-WIRE Universal Digital Channel (UDC) COMPATIBLE LOOP																
	2-Wire Universal Digital Channel (UDC) Compatible Loop - Zone 1	I	1	UDC	UDC2X	21.88	117.24	79.77	52.88	10.54		15.66				
	2-Wire Universal Digital Channel (UDC) Compatible Loop - Zone 2	I	2	UDC	UDC2X	32.85	117.24	79.77	52.88	10.54		15.66				
	2-Wire Universal Digital Channel (UDC) Compatible Loop - Zone 3	I	3	UDC	UDC2X	48.55	117.24	79.77	52.88	10.54		15.66				
	CLEC to CLEC Conversion Charge without outside dispatch			UDC	UREWO		91.63	44.16				15.66				
2-WIRE ASYMMETRICAL DIGITAL SUBSCRIBER LINE (ADSL) COMPATIBLE LOOP																
	2 Wire Unbundled ADSL Loop including manual service inquiry & facility reservation - Zone 1		1	UAL	UAL2X	11.01	110.00	68.00	47.24	7.44		15.66				
	2 Wire Unbundled ADSL Loop including manual service inquiry & facility reservation - Zone 2		2	UAL	UAL2X	12.73	110.00	68.00	47.24	7.44		15.66				
	2 Wire Unbundled ADSL Loop including manual service inquiry & facility reservation - Zone 3		3	UAL	UAL2X	14.30	110.00	68.00	47.24	7.44		15.66				
	Order Coordination for Specified Conversion Time (per LSR)			UAL	OCOSL		18.09									
	2 Wire Unbundled ADSL Loop without manual service inquiry & facility reservaton - Zone 1		1	UAL	UAL2W	11.01	90.00	57.00	47.24	7.44		15.66				
	2 Wire Unbundled ADSL Loop without manual service inquiry & facility reservaton - Zone 2		2	UAL	UAL2W	12.73	90.00	57.00	47.24	7.44		15.66				
	2 Wire Unbundled ADSL Loop without manual service inquiry & facility reservaton - Zone 3		3	UAL	UAL2W	14.30	90.00	57.00	47.24	7.44		15.66				
	Order Coordination for Specified Conversion Time (per LSR)			UAL	OCOSL		18.09									
	CLEC to CLEC Conversion Charge without outside dispatch			UAL	UREWO		86.20	40.40				15.66				
2-WIRE HIGH BIT RATE DIGITAL SUBSCRIBER LINE (HDSL) COMPATIBLE LOOP																
	2 Wire Unbundled HDSL Loop including manual service inquiry & facility reservation - Zone 1		1	UHL	UHL2X	8.74	110.00	68.00	47.24	7.44		15.66				
	2 Wire Unbundled HDSL Loop including manual service inquiry & facility reservation - Zone 2		2	UHL	UHL2X	10.17	110.00	68.00	47.24	7.44		15.66				
	2 Wire Unbundled HDSL Loop including manual service inquiry & facility reservation - Zone 3		3	UHL	UHL2X	11.44	110.00	68.00	47.24	7.44		15.66				
	Order Coordination for Specified Conversion Time (per LSR)			UHL	OCOSL		18.09									
	2 Wire Unbundled HDSL Loop without manual service inquiry and facility reservation - Zone 1		1	UHL	UHL2W	8.74	90.00	57.00	47.24	7.44		15.66				
	2 Wire Unbundled HDSL Loop without manual service inquiry and facility reservation - Zone 2		2	UHL	UHL2W	10.17	90.00	57.00	47.24	7.44		15.66				
	2 Wire Unbundled HDSL Loop without manual service inquiry and facility reservation - Zone 3		3	UHL	UHL2W	11.44	90.00	57.00	47.24	7.44		15.66				
	Order Coordination for Specified Conversion Time (per LSR)			UHL	OCOSL		18.09									
	CLEC to CLEC Conversion Charge without outside dispatch			UHL	UREWO		86.14	40.40				15.66				
4-WIRE HIGH BIT RATE DIGITAL SUBSCRIBER LINE (HDSL) COMPATIBLE LOOP																
	4 Wire Unbundled HDSL Loop including manual service inquiry and facility reservation - Zone 1		1	UHL	UHL4X	13.95	148.36	68.00	51.70	9.73		15.66				
	4-Wire Unbundled HDSL Loop including manual service inquiry and facility reservation - Zone 2		2	UHL	UHL4X	15.56	148.36	68.00	51.70	9.73		15.66				
	4-Wire Unbundled HDSL Loop including manual service inquiry and facility reservation - Zone 3		3	UHL	UHL4X	15.25	148.36	68.00	51.70	9.73		15.66				
	Order Coordination for Specified Conversion Time (per LSR)			UHL	OCOSL		18.09									
	4-Wire Unbundled HDSL Loop without manual service inquiry and facility reservation - Zone 1		1	UHL	UHL4W	13.95	94.00	57.00	51.70	9.73		15.66				
	4-Wire Unbundled HDSL Loop without manual service inquiry and facility reservation - Zone 2		2	UHL	UHL4W	15.56	94.00	57.00	51.70	9.73		15.66				
	4-Wire Unbundled HDSL Loop without manual service inquiry and facility reservation - Zone 3		3	UHL	UHL4W	15.25	94.00	57.00	51.70	9.73		15.66				
	Order Coordination for Specified Conversion Time (per LSR)			UHL	OCOSL		18.09									
	CLEC to CLEC Conversion Charge without outside dispatch			UHL	UREWO		86.14	40.40				15.66				
4-WIRE DS1 DIGITAL LOOP																
	4-Wire DS1 Digital Loop - Zone 1		1	USL	USLXX	82.55	252.47	157.54	44.70	11.71		15.66				

UNBUNDLED NETWORK ELEMENTS - Alabama														Attachment: 2		Exhibit: B	
CATEGORY	RATE ELEMENTS	Interim	Zone	BCS	USOC	RATES ($)					Svc Order Submitted Elec per LSR	Svc Order Submitted Manually per LSR	Incremental Charge - Manual Svc Order vs. Electronic-1st	Incremental Charge - Manual Svc Order vs. Electronic-Add'l	Incremental Charge - Manual Svc Order vs. Electronic-Disc 1st	Incremental Charge - Manual Svc Order vs. Electronic-Disc Add'l
						Rec	Nonrecurring		Nonrecurring Disconnect		OSS Rates($)					
							First	Add'l	First	Add'l	SOMEC	SOMAN	SOMAN	SOMAN	SOMAN	SOMAN
	4-Wire DS1 Digital Loop - Zone 2		2	USL	USLXX	154.18	252.47	157.54	44.70	11.71		15.66				
	4-Wire DS1 Digital Loop - Zone 3		3	USL	USLXX	314.52	252.47	157.54	44.70	11.71		15.66				
	Order Coordination for Specified Conversion Time (per LSR)			USL	OCOSL		18.09									
	CLEC to CLEC Conversion Charge without outside dispatch			USL	UREWO		101.09	43.05				15.66				
4-WIRE 19.2, 56 OR 64 KBPS DIGITAL GRADE LOOP																
	4 Wire Unbundled Digital 19.2 Kbps		1	UDL	UDL19	26.09	126.27	88.80	59.14	14.50		15.66				
	4 Wire Unbundled Digital 19.2 Kbps		2	UDL	UDL19	35.95	126.27	88.80	59.14	14.50		15.66				
	4 Wire Unbundled Digital 19.2 Kbps		3	UDL	UDL19	37.88	126.27	88.80	59.14	14.50		15.66				
	4 Wire Unbundled Digital Loop 56 Kbps - Zone 1		1	UDL	UDL56	26.09	126.27	88.80	59.14	14.50		15.66				
	4 Wire Unbundled Digital Loop 56 Kbps - Zone 2		2	UDL	UDL56	35.95	126.27	88.80	59.14	14.50		15.66				
	4 Wire Unbundled Digital Loop 56 Kbps - Zone 3		3	UDL	UDL56	37.88	126.27	88.80	59.14	14.50		15.66				
	Order Coordination for Specified Conversion Time (per LSR)			UDL	OCOSL		18.09									
	4 Wire Unbundled Digital Loop 64 Kbps - Zone 1		1	UDL	UDL64	26.09	126.27	88.80	59.14	14.50		15.66				
	4 Wire Unbundled Digital Loop 64 Kbps - Zone 2		2	UDL	UDL64	35.95	126.27	88.80	59.14	14.50		15.66				
	4 Wire Unbundled Digital Loop 64 Kbps - Zone 3		3	UDL	UDL64	37.88	126.27	88.80	59.14	14.50		15.66				
	Order Coordination for Specified Conversion Time (per LSR)			UDL	OCOSL		18.09									
	CLEC to CLEC Conversion Charge without outside dispatch			UDL	UREWO		102.13	49.75				15.66				
2-WIRE Unbundled COPPER LOOP																
	2-Wire Unbundled Copper Loop/Short including manual service inquiry & facility reservation - Zone 1		1	UCL	UCLPB	11.01	112.46	65.30	47.24	7.44		15.66				
	2-Wire Unbundled Copper Loop/Short including manual service inquiry & facility reservation - Zone 2		2	UCL	UCLPB	12.73	112.46	65.30	47.24	7.44		15.66				
	2 Wire Unbundled Copper Loop/Short including manual service inquiry & facility reservation - Zone 3		3	UCL	UCLPB	14.30	112.46	65.30	47.24	7.44		15.66				
	Order Coordination for Unbundled Copper Loops (per loop)			UCL	UCLMC		8.15	8.15								
	2-Wire Unbundled Copper Loop/Short without manual service inquiry and facility reservation - Zone 1	I	1	UCL	UCLPW	11.01	91.46	54.30	47.24	7.44		15.66				
	2-Wire Unbundled Copper Loop/Short without manual service inquiry and facility reservation - Zone 2	I	2	UCL	UCLPW	12.73	91.46	54.30	47.24	7.44		15.66				
	2-Wire Unbundled Copper Loop/Short without manual service inquiry and facility reservation - Zone 3	I	3	UCL	UCLPW	14.30	91.46	54.30	47.24	7.44		15.66				
	Order Coordination for Unbundled Copper Loops (per loop)			UCL	UCLMC		8.15	8.15								
	2-Wire Unbundled Copper Loop/Long - includes manual srvc. inquiry and facility reservation - Zone 1		1	UCL	UCL2L	31.42	112.46	65.30	47.24	7.44		15.66				
	2-Wire Unbundled Copper Loop/Long - includes manual svc. inquiry and facility reservation - Zone 2		2	UCL	UCL2L	55.01	112.46	65.30	47.24	7.44		15.66				
	2-Wire Unbundled Copper Loop/Long - includes manual svc. inquiry and facility reservation - Zone 3		3	UCL	UCL2L	80.00	112.46	65.30	47.24	7.44		15.66				
	Order Coordination for Unbundled Copper Loops (per loop)			UCL	UCLMC		8.15	8.15								
	2-Wire Unbundled Copper Loop/Long - without manual service inquiry and facility reservation - Zone 1	I	1	UCL	UCL2W	31.42	91.46	54.30	47.24	7.44		15.66				
	2-Wire Unbundled Copper Loop/Long - without manual service inquiry and facility reservation - Zone 2	I	2	UCL	UCL2W	55.01	91.46	54.30	47.24	7.44		15.66				
	2-Wire Unbundled Copper Loop/Long - without manual service inquiry and facility reservation - Zone 3	I	3	UCL	UCL2W	80.00	91.46	54.30	47.24	7.44		15.66				
	Order Coordination for Unbundled Copper Loops (per loop)			UCL	UCLMC		8.15	8.15								
	CLEC to CLEC Conversion Charge without outside dispatch (UCL-Des)			UCL	UREWO		97.23	42.48				15.66				
4-WIRE COPPER LOOP																
	4-Wire Copper Loop/Short - including manual service inquiry and facility reservation - Zone 1		1	UCL	UCL4S	17.36	135.21	88.05	51.70	9.73		15.66				
	4-Wire Copper Loop/Short - including manual service inquiry and facility reservation - Zone 2		2	UCL	UCL4S	20.76	135.21	88.05	51.70	9.73		15.66				
	4-Wire Copper Loop/Short - including manual service inquiry and facility reservation - Zone 3		3	UCL	UCL4S	28.21	135.21	88.05	51.70	9.73		15.66				
	Order Coordination for Unbundled Copper Loops (per loop)			UCL	UCLMC		8.15	8.15								
	4-Wire Copper Loop/Short - without manual service inquiry and facility reservation - Zone 1	I	1	UCL	UCL4W	17.36	114.21	67.05	51.70	9.73		15.66				

UNBUNDLED NETWORK ELEMENTS - Alabama														Attachment: 2		Exhibit: B	
CATEGORY		RATE ELEMENTS	Interim	Zone	BCS	USOC	RATES ($)					Svc Order Submitted Elec per LSR	Svc Order Submitted Manually per LSR	Incremental Charge - Manual Svc Order vs. Electronic-1st	Incremental Charge - Manual Svc Order vs. Electronic-Add'l	Incremental Charge - Manual Svc Order vs. Electronic-Disc 1st	Incremental Charge - Manual Svc Order vs. Electronic-Disc Add'l
							Rec	Nonrecurring		Nonrecurring Disconnect		OSS Rates($)					
								First	Add'l	First	Add'l	SOMEC	SOMAN	SOMAN	SOMAN	SOMAN	SOMAN
		4-Wire Copper Loop/Short - without manual service inquiry and facility reservation - Zone 2	I	2	UCL	UCL4W	20.76	114.21	67.05	51.70	9.73		15.66				
		4-Wire Copper Loop/Short - without manual service inquiry and facility reservation - Zone 3	I	3	UCL	UCL4W	28.21	114.21	67.05	51.70	9.73		15.66				
		Order Coordination for Unbundled Copper Loops (per loop)			UCL	UCLMC		8.15	8.15								
		4-Wire Unbundled Copper Loop/Long - includes manual svc. inquiry and facility reservation - Zone 1		1	UCL	UCL4L	49.35	135.21	88.05	51.70	9.73		15.66				
		4-Wire Unbundled Copper Loop/Long - includes manual svc. inquiry and facility reservation - Zone 2		2	UCL	UCL4L	92.45	135.21	88.05	51.70	9.73		15.66				
		4-Wire Unbundled Copper Loop/Long - includes manual svc. inquiry and facility reservation - Zone 3		3	UCL	UCL4L	127.39	135.21	88.05	51.70	9.73		15.66				
		Order Coordination for Unbundled Copper Loops (per loop)			UCL	UCLMC		8.15	8.15								
		4-Wire Unbundled Copper Loop/Long - without manual svc. inquiry and facility reservation - Zone 1	I	1	UCL	UCL4O	49.35	114.21	67.05	51.70	9.73		15.66				
		4-Wire Unbundled Copper Loop/Long - without manual svc. inquiry and facility reservation - Zone 2	I	2	UCL	UCL4O	92.45	114.21	67.05	51.70	9.73		15.66				
		4-Wire Unbundled Copper Loop/Long - without manual svc. inquiry and facility reservation - Zone 3	I	3	UCL	UCL4O	127.39	114.21	67.05	51.70	9.73		15.66				
		Order Coordination for Unbundled Copper Loops (per loop)			UCL	UCLMC		8.15	8.15								
		CLEC to CLEC conversion Charge without outside dispatch			UCL	UREWO		97.23	42.48				15.66				
LOOP MODIFICATION																	
		Unbundled Loop Modification, Removal of Load Coils - 2 Wire pair less than or equal to 18k ft	I		UAL, UHL, UCL, UEQ, ULS, UEA, UEANL, UEPSR, UEPSB	ULM2L		0.00	0.00				15.66				
		Unbundled Loop Modification, Removal of Load Coils - 2 wire greater than 18k ft	I		UCL, ULS, UEQ	ULM2G		170.51	170.51				15.66				
		Unbundled Loop Modification Removal of Load Coils - 4 Wire less than or equal to 18K ft	I		UHL, UCL, UEA	ULM4L		0.00	0.00				15.66				
		Unbundled Loop Modification Removal of Load Coils - 4 Wire pair greater than 18k ft	I		UCL	ULM4G		170.51	170.51				15.66				
		Unbundled Loop Modification Removal of Bridged Tap Removal, per unbundled loop	I		UAL, UHL, UCL, UEQ,ULS,UEA, UEANL, UEPSR, UEPSB	ULMBT		32.41	32.41				15.66				
SUB-LOOPS																	
	Sub-Loop Distribution																
		Sub-Loop - Per Cross Box Location - CLEC Feeder Facility Set-Up	I		UEANL	USBSA		244.42					15.66				
		Sub-Loop - Per Cross Box Location - Per 25 Pair Panel Set-Up	I		UEANL	USBSB		22.64					15.66				
		Sub-Loop - Per Building Equipment Room - CLEC Feeder Facility Set-Up	I		UEANL	USBSC		177.45					15.66				
		Sub-Loop - Per Building Equipment Room - Per 25 Pair Panel Set-Up	I		UEANL	USBSD		55.15					15.66				
		Sub-Loop Distribution Per 2-Wire Analog Voice Grade Loop - Zone 1		1	UEANL	USBN2	11.21	65.80	30.96	45.25	6.70		15.66				
		Sub-Loop Distribution Per 2-Wire Analog Voice Grade Loop - Zone 2		2	UEANL	USBN2	11.94	65.80	30.96	45.25	6.70		15.66				
		Sub-Loop Distribution Per 2-Wire Analog Voice Grade Loop - Zone 3		3	UEANL	USBN2	16.86	65.80	30.96	45.25	6.70		15.66				
		Order Coordination for Unbundled Sub-Loops, per sub-loop pair			UEANL	USBMC		8.15	8.15								
		Sub-Loop Distribution Per 4-Wire Analog Voice Grade Loop - Zone 1		1	UEANL	USBN4	8.46	79.03	44.19	49.71	9.07		15.66				
		Sub-Loop Distribution Per 4-Wire Analog Voice Grade Loop - Zone 2		2	UEANL	USBN4	16.67	79.03	44.19	49.71	9.07		15.66				
		Sub-Loop Distribution Per 4-Wire Analog Voice Grade Loop - Zone 3		3	UEANL	USBN4	32.57	79.03	44.19	49.71	9.07		15.66				

CATEGORY	RATE ELEMENTS	Interim	Zone	BCS	USOC	RATES ($)					Svc Order Submitted Elec per LSR	Svc Order Submitted Manually per LSR	Attachment: 2 Incremental Charge - Manual Svc Order vs. Electronic-1st	Attachment: 2 Incremental Charge - Manual Svc Order vs. Electronic-Add'l	Exhibit: B Incremental Charge - Manual Svc Order vs. Electronic-Disc 1st	Exhibit: B Incremental Charge - Manual Svc Order vs. Electronic-Disc Add'l
						Rec	Nonrecurring		Nonrecurring Disconnect				OSS Rates($)			
							First	Add'l	First	Add'l	SOMEC	SOMAN	SOMAN	SOMAN	SOMAN	SOMAN
	Order Coordination for Unbundled Sub-Loops, per sub-loop pair			UEANL	USBMC		8.15	8.15								
	Sub-Loop 2-Wire Intrabuilding Network Cable (INC)	I		UEANL	USBR2	2.27	53.01	18.17	45.25	6.70		15.66				
	Order Coordination for Unbundled Sub-Loops, per sub-loop pair			UEANL	USBMC		8.15	8.15								
	Sub-Loop 4-Wire Intrabuilding Network Cable (INC)	I		UEANL	USBR4	5.16	59.25	24.41	49.71	9.07		15.66				
	Order Coordination for Unbundled Sub-Loops, per sub-loop pair			UEANL	USBMC		8.15	8.15								
	2 Wire Copper Unbundled Sub-Loop Distribution - Zone 1		1	UEF	UCS2X	6.22	65.80	30.96	45.25	6.70		15.66				
	2 Wire Copper Unbundled Sub-Loop Distribution - Zone 2		2	UEF	UCS2X	8.76	65.80	30.96	45.25	6.70		15.66				
	2 Wire Copper Unbundled Sub-Loop Distribution - Zone 3		3	UEF	UCS2X	11.27	65.80	30.96	45.25	6.70		15.66				
	Order Coordination for Unbundled Sub-Loops, per sub-loop pair			UEF	USBMC		8.15	8.15								
	4 Wire Copper Unbundled Sub-Loop Distribution - Zone 1		1	UEF	UCS4X	6.11	79.03	44.19	49.71	9.07		15.66				
	4 Wire Copper Unbundled Sub-Loop Distribution - Zone 2		2	UEF	UCS4X	12.61	79.03	44.19	49.71	9.07		15.66				
	4 Wire Copper Unbundled Sub-Loop Distribution - Zone 3		3	UEF	UCS4X	15.36	79.03	44.19	49.71	9.07		15.66				
	Order Coordination for Unbundled Sub-Loops, per sub-loop pair			UEF	USBMC		8.15	8.15								
Unbundled Network Terminating Wire (UNTW)																
	Unbundled Network Terminating Wire (UNTW) per Pair			UENTW	UENPP	0.40	30.01					15.66				
Network Interface Device (NID)																
	Network Interface Device (NID) - 1-2 lines			UENTW	UND12		43.23	28.38				15.66				
	Network Interface Device (NID) - 1-6 lines			UENTW	UND16		63.97	49.11				15.66				
	Network Interface Device Cross Connect - 2 W			UENTW	UNDC2		5.87	5.87				15.66				
	Network Interface Device Cross Connect - 4W			UENTW	UNDC4		5.87	5.87				15.66				
SUB-LOOPS																
Sub-Loop Feeder																
	USL-Feeder, DS0 Set-up per Cross Box location - CLEC Distribution Facility set-up			UEA, UDN,UCL,UDL,UDC	USBFW		244.42					15.66				
	USL Feeder - DS0 Set-up per Cross Box location - per 25 pair set-up			UEA, UDN,UCL,UDL,UDC	USBFX		22.64	22.64				15.66				
	USL Feeder DS1 Set-up at DSX location, per DS1 termination			USL	USBFZ		519.95	11.32				15.66				
	Unbundled Sub-Loop Feeder Loop, 2 Wire Ground Start, Voice Grade - Zone 1		1	UEA	USBFA	8.03	93.00	56.48	54.51	13.67		15.66				
	Unbundled Sub-Loop Feeder Loop, 2 Wire Ground-Start, Voice Grade - Zone 2		2	UEA	USBFA	12.00	93.00	56.48	54.51	13.67		15.66				
	Unbundled Sub-Loop Feeder Loop, Per 2 Wire Ground-Start, Voice Grade - Zone 3		3	UEA	USBFA	20.39	93.00	56.48	54.51	13.67		15.66				
	Order Coordination for Specified Conversion Time, per LSR			UEA	OCOSL		18.09									
	Unbundlde Sub-Loop Feeder Loop, 2 Wire Loop-Start, Voice Grade - Zone 1		1	UEA	USBFB	8.03	93.00	56.48	54.51	13.67		15.66				
	Unbundled Sub-Loop Feeder Loop, 2 Wire Loop-Start, Voice Grade - Zone 2		2	UEA	USBFB	12.00	93.00	56.48	54.51	13.67		15.66				
	Unbundled Sub-Loop Feeder Loop, 2 Wire Start Loop, Voice Grade - Zone 3		3	UEA	USBFB	20.39	93.00	56.48	54.51	13.67		15.66				
	Order Coordination for Specified Time Conversion, per LSR			UEA	OCOSL		18.09									
	Unbundled Sub-Loop Feeder Loop, 2 Wire Reverse Battery, Voice Grade - Zone 1		1	UEA	USBFC	8.03	93.00	56.48	54.51	13.67		15.66				
	Unbundled Sub-Loop Feeder Loop, 2 Wire Reverse Battery, Voice Grade - Zone 2		2	UEA	USBFC	12.00	93.00	56.48	54.51	13.67		15.66				
	Unbundled Sub-Loop Feeder Loop, 2 Wire Analog Reverse Battery, Voice Grade - Zone 3		3	UEA	USBFC	20.39	93.00	56.48	54.51	13.67		15.66				
	Order Coordination For Specified Conversion Time, per LSR			UEA	OCOSL		18.09									
	Unbundled Sub-Loop Feeder Loop, 4 Wire Ground-Start, Voice Grade - Zone 1		1	UEA	USBFD	19.21	107.56	70.09	62.05	17.40		15.66				
	Unbundled Sub-Loop Feeder Loop, 4 Wire Ground-Start, Voice Grade - Zone 2		2	UEA	USBFD	23.47	107.56	70.09	62.05	17.40		15.66				
	Unbundled Sub-Loop Feeder Loop, 4 Wire Ground Start, Voice Grade - Zone 3		3	UEA	USBFD	39.63	107.56	70.09	62.05	17.40		15.66				

CATEGORY	RATE ELEMENTS	Interim	Zone	BCS	USOC	RATES ($)					Svc Order Submitted Elec per LSR	Svc Order Submitted Manually per LSR	Attachment: 2		Exhibit: B	
													Incremental Charge - Manual Svc Order vs. Electronic-1st	Incremental Charge - Manual Svc Order vs. Electronic-Add'l	Incremental Charge - Manual Svc Order vs. Electronic-Disc 1st	Incremental Charge - Manual Svc Order vs. Electronic-Disc Add'l
						Rec	Nonrecurring		Nonrecurring Disconnect		OSS Rates($)					
							First	Add'l	First	Add'l	SOMEC	SOMAN	SOMAN	SOMAN	SOMAN	SOMAN
	Order Coordination For Specified Conversion Time, Per LSR			UEA	OCOSL		18.09									
	Unbundled Sub-Loop Feeder Loop, 4 Wire Loop-Start, Voice Grade - Zone 1		1	UEA	USBFE	19.21	107.56	70.09	62.05	17.40		15.66				
	Unbundled Sub-Loop Feeder Loop, 4 Wire Loop-Start, Voice Grade - Zone 2		2	UEA	USBFE	23.47	107.56	70.09	62.05	17.40		15.66				
	Unbundled Sub-Loop Feeder Loop, 4 Wire Loop-Start, Voice Grade - Zone 3		3	UEA	USBFE	39.63	107.56	70.09	62.05	17.40		15.66				
	Order Coordination For Specified Conversion Time, Per LSR			UEA	OCOSL		18.09									
	Unbundled Sub-Loop Feeder Loop, 2 Wire ISDN BRI - Zone 1		1	UDN	USBFF	14.87	106.16	68.69	55.64	13.29		15.66				
	Unbundled Sub-Loop Feeder Loop, 2-Wire ISDN BRI - Zone 2		2	UDN	USBFF	21.69	106.16	68.69	55.64	13.29		15.66				
	Unbundled Sub-Loop Feeder Loop, 2-Wire ISDN BRI - Zone 3		3	UDN	USBFF	32.51	106.16	68.69	55.64	13.29		15.66				
	Order Coordination For Specified Conversion Time, Per LSR			UDN	OCOSL		18.09									
	Unbundled Sub-Loop Feeder, 2 Wire UDC (IDSL compatible)		1	UDC	USBFS	14.87	106.16	68.69	55.64	13.29		15.66				
	Unbundled Sub-Loop Feeder, 2 Wire UDC (IDSL compatible)		2	UDC	USBFS	21.69	106.16	68.69	55.64	13.29		15.66				
	Unbundled Sub-Loop Feeder, 2 Wire UDC (IDSL compatible)		3	UDC	USBFS	32.51	106.16	68.69	55.64	13.29		15.66				
	Unbundled Sub-Loop Feeder Loop, 4-Wire DS1 - Zone 1		1	USL	USBFG	55.09	101.85	64.38	62.05	17.40		15.66				
	Unbundled Sub-Loop Feeder Loop, 4-Wire DS1 - Zone 2		2	USL	USBFG	124.69	101.85	64.38	62.05	17.40		15.66				
	Unbundled Sub-Loop Feeder Loop, 4-Wire DS1 - Zone 3		3	USL	USBFG	294.62	101.85	64.38	62.05	17.40		15.66				
	Order Coordination For Specified Conversion Time, Per LSR			USL	OCOSL		18.09									
	Unbundled Sub-Loop Feeder, 2-Wire Copper Loop - Zone 1		1	UCL	USBFH	5.75	83.78	46.32	53.02	10.67		15.66				
	Unbundled Sub-Loop Feeder Loop, 2-Wire Copper Loop - Zone 2		2	UCL	USBFH	4.93	83.78	46.32	53.02	10.67		15.66				
	Unbundled Sub-Loop Feeder Loop, 2-Wire Copper Loop - Zone 3		3	UCL	USBFH	3.96	83.78	46.32	53.02	10.67		15.66				
	Order Coordination For Specified Conversion Time, per LSR			UCL	OCOSL		18.09									
	Sub-Loop Feeder - Per 4-Wire Copper Loop - Zone 1		1	UCL	USBFJ	12.71	100.99	63.53	57.90	13.26		15.66				
	Sub-Loop Feeder - Per 4-Wire Copper Loop - Zone 2		2	UCL	USBFJ	9.69	100.99	63.53	57.90	13.26		15.66				
	Sub-Loop Feeder - Per 4-Wire Copper Loop - Zone 3		3	UCL	USBFJ	14.37	100.99	63.53	57.90	13.26		15.66				
	Order Coordination For Specified Conversion Time, per LSR			UCL	OCOSL		18.09									
	Sub-Loop Feeder - Per 4-Wire 19.2 Kbps Digital Grade Loop		1	UDL	USBFN	19.20	101.85	64.38	62.05	17.40		15.66				
	Sub-Loop Feeder - Per 4-Wire 19.2 Kbps Digital Grade Loop		2	UDL	USBFN	21.64	101.85	64.38	62.05	17.40		15.66				
	Sub-Loop Feeder - Per 4-Wire 19.2 Kbps Digital Grade Loop		3	UDL	USBFN	23.75	101.85	64.38	62.05	17.40		15.66				
	Sub-Loop Feeder - Per 4-Wire 56 Kbps Digital Grade Loop - Zone 1		1	UDL	USBFO	19.20	101.85	64.38	62.05	17.40		15.66				
	Sub-Loop Feeder - Per 4-Wire 56 Kbps Digital Grade Loop - Zone 2		2	UDL	USBFO	21.64	101.85	64.38	62.05	17.40		15.66				
	Sub-Loop Feeder - Per 4-Wire 56 Kbps Digital Grade Loop - Zone 3		3	UDL	USBFO	23.75	101.85	64.38	62.05	17.40		15.66				
	Order Coordination For Specified Time Conversion, per LSR			UDL	OCOSL		18.09									
	Sub-Loop Feeder - Per 4-Wire 64 Kbps Digital Grade Loop - Zone 1		1	UDL	USBFP	19.20	101.85	64.38	62.05	17.40		15.66				
	Sub-Loop Feeder - Per 4-Wire 64 Kbps Digital Grade Loop - Zone 2		2	UDL	USBFP	21.64	101.85	64.38	62.05	17.40		15.66				
	Sub-Loop Feeder - Per 4-Wire 64 Kbps Digital Grade Loop - Zone 3		3	UDL	USBFP	23.75	101.85	64.38	62.05	17.40		15.66				
	Order Coordination For Specified Conversion Time, per LSR			UDL	OCOSL		18.09									
SUB-LOOPS																
Sub-Loop Feeder																
	Sub Loop Feeder - DS3 - Per Mile Per Month	I		UE3	1L5SL	13.55										
	Sub Loop Feeder - DS3 - Facility Termination Per Month	I		UE3	USBF1	332.40	3,400.58	407.00	160.47	90.97		15.66				
	Sub Loop Feeder – STS-1 – Per Mile Per Month	I		UDLSX	1L5SL	13.55										
	Sub Loop Feeder - STS-1 - Facility Termination Per Month	I		UDLSX	USBF7	357.36	3,400.58	407.00	160.47	90.97		15.66				
UNBUNDLED LOOP CONCENTRATION																
	Unbundled Loop Concentration - System A (TR008)			ULC	UCT8A	364.17	325.41	325.41				15.66				
	Unbundled Loop Concentration - System B (TR008)			ULC	UCT8B	43.70	135.59	135.59				15.66				
	Unbundled Loop Concentration - System A (TR303)			ULC	UCT3A	395.12	325.41	325.41								
	Unbundled Loop Concentration - System B (TR303)			ULC	UCT3B	73.64	135.59	135.59				15.66				
	Unbundled Loop Concentration - DS1 Loop Interface Card			ULC	UCTCO	4.16	63.29	46.07	16.79	4.70		15.66				

UNBUNDLED NETWORK ELEMENTS - Alabama														Attachment: 2		Exhibit: B	
CATEGORY		RATE ELEMENTS	Interim	Zone	BCS	USOC	RATES ($)					Svc Order Submitted Elec per LSR	Svc Order Submitted Manually per LSR	Incremental Charge - Manual Svc Order vs. Electronic-1st	Incremental Charge - Manual Svc Order vs. Electronic-Add'l	Incremental Charge - Manual Svc Order vs. Electronic-Disc 1st	Incremental Charge - Manual Svc Order vs. Electronic-Disc Add'l
							Rec	Nonrecurring		Nonrecurring Disconnect		OSS Rates($)					
								First	Add'l	First	Add'l	SOMEC	SOMAN	SOMAN	SOMAN	SOMAN	SOMAN
		Unbundled Loop Concentration - ISDN Loop Interface (Brite Card)			UDN	ULCC1	6.60	10.54	10.48	5.39	5.36		15.66				
		Unbundled Loop Concentration - UDC Loop Interface (Brite Card)			UDC	ULCCU	6.60	10.54	10.48	5.39	5.36		15.66				
		Unbundled Loop Concentration - -2 Wire Voice-Loop Start or Ground Start Loop Interface (POTS Card)			UEA	ULCC2	1.65	10.54	10.48	5.39	5.36		15.66				
		Unbundled Loop Concentration - 2 Wire Voice - Reverse Battery Loop Interface (SPOTS Card)			UEA	ULCCR	9.81	10.54	10.48	5.39	5.36		15.66				
		Unbundled Loop Concentration - 4 Wire Voice Loop Interface (Specials Card)			UEA	ULCC4	5.85	10.54	10.48	5.39	5.36		15.66				
		Unbundled Loop Concentration - TEST CIRCUIT Card			ULC	UCTTC	28.60	10.54	10.48	5.39	5.36		15.66				
		Unbundled Loop Concentration - Digital 19.2 Kbps Data Loop Interface			UDL	ULCC7	8.67	10.54	10.48	5.39	5.36		15.66				
		Unbundled Loop Concentration - Digital 56 Kbps Data Loop Interface			UDL	ULCC5	8.67	10.54	10.48	5.39	5.36		15.66				
		Unbundled Loop Concentration - Digital 64 Kbps Data Loop Interface			UDL	ULCC6	8.67	10.54	10.48	5.39	5.36		15.66				
UNE OTHER, PROVISIONING ONLY - NO RATE																	
		NID - Dispatch and Service Order for NID installation			UENTW	UNDBX	0.00	0.00									
		UNTW Circuit Id Establishment, Provisioning Only - No Rate			UENTW	UENCE	0.00	0.00									
		Unbundled Contract Name, Provisioning Only - No Rate			UEANL,UEF,UEQ,UENTW	UNECN	0.00	0.00									
UNE OTHER, PROVISIONING ONLY - NO RATE																	
		Unbundled Contact Name, Provisioning Only - no rate			UAL,UCL,UDC,UDL,UDN,UEA,UHL,ULC	UNECN	0.00	0.00									
		Unbundled Sub-Loop Feeder-2 Wire Cross Box Jumper - no rate			UEA,UDN,UCL,UDC	USBFQ	0.00	0.00									
		Unbundled Sub-Loop Feeder-4 Wire Cross Box Jumper - no rate			UEA,USL,UCL,UDL	USBFR	0.00	0.00									
		Unbundled DS1 Loop - Superframe Format Option - no rate			USL	CCOSF	0.00	0.00									
		Unbundled DS1 Loop - Expanded Superframe Format option - no rate			USL	CCOEF	0.00	0.00									
HIGH CAPACITY UNBUNDLED LOCAL LOOP																	
	NOTE: minimum billing period of three months for DS3/STS-1 Local Loop																
		High Capacity Unbundled Local Loop - DS3 - Per Mile per month			UE3	1L5ND	8.38										
		High Capacity Unbundled Local Loop - DS3 - Facility Termination per month			UE3	UE3PX	308.98	451.52	263.94	119.49	83.58		15.66				
		High Capacity Unbundled Local Loop - STS-1 - Per Mile per month			UDLSX	1L5ND	8.38										
		High Capacity Unbundled Local Loop - STS-1 - Facility Termination per month			UDLSX	UDLS1	319.83	451.52	263.94	119.49	83.58		15.66				
LOOP MAKE-UP																	
		Loop Makeup - Preordering Without Reservation, per working or spare facility queried (Manual).			UMK	UMKLW		20.00	20.00								
		Loop Makeup - Preordering With Reservation, per spare facility queried (Manual).			UMK	UMKLP		21.00	21.00								
HIGH FREQUENCY SPECTRUM																	
	LINE SHARING																
	SPLITTERS-CENTRAL OFFICE BASED																
		Line Sharing Splitter, per System 96 Line Capacity			ULS	ULSDA	155.97	188.79	0.00	177.98	0.00		15.66				
		Line Sharing Splitter, per System 24 Line Capacity			ULS	ULSDB	38.99	188.79	0.00	177.98	0.00		15.66				
		Line Sharing Splitter, Per System, 8 Line Capacity	I		ULS	ULSD8	12.73	377.58	0.00	355.96	0.00		15.66				
		Line Sharing-DLEC Owned Splitter in CO-CFA activaton-deactivation (per LSOD)			ULS	ULSDG		86.47	0.00	49.84	0.00		15.66				
	END USER ORDERING-CENTRAL OFFICE BASED-HIGH FREQUENCY SPECTRUM AKA LINE SHARING																
		Line Sharing - per Line Activation (BST Owned splitter)			ULS	ULSDC	0.61	18.51	10.60	10.01	4.92		15.66				

UNBUNDLED NETWORK ELEMENTS - Alabama														Attachment: 2		Exhibit: B	
CATEGORY		RATE ELEMENTS	Interim	Zone	BCS	USOC	RATES ($)					Svc Order Submitted Elec per LSR	Svc Order Submitted Manually per LSR	Incremental Charge - Manual Svc Order vs. Electronic-1st	Incremental Charge - Manual Svc Order vs. Electronic-Add'l	Incremental Charge - Manual Svc Order vs. Electronic-Disc 1st	Incremental Charge - Manual Svc Order vs. Electronic-Disc Add'l
							Rec	Nonrecurring		Nonrecurring Disconnect		OSS Rates($)					
								First	Add'l	First	Add'l	SOMEC	SOMAN	SOMAN	SOMAN	SOMAN	SOMAN
		Line Sharing - per Subsequent Activity per Line Rearrangement(BST Owned Splitter			ULS	ULSDS		16.39	8.19				15.66				
		Line Sharing - per Subsequent Activity per Line Rearrangement(DLEC Owned Splitter			ULS	ULSCS		16.39	8.19				15.66				
		Line Sharing - per Line Activation (DLEC owned Splitter)	I		ULS	ULSCC	0.61	47.44	19.31	20.02	9.83		15.66				
	LINE SPLITTING																
	END USER ORDERING-CENTRAL OFFICE BASED																
		Line Splitting - per line activation DLEC owned splitter	I		UEPSR UEPSB	UREOS	0.61										
		Line Splitting - per line activation BST owned - physical	I		UEPSR UEPSB	UREBP	0.61	37.01	21.19	20.02	9.83		15.66				
		Line Splitting - per line activation BST owned - virtual	I		UEPSR UEPSB	UREBV	0.61	37.01	21.19	20.02	9.83		15.66				
	REMOTE SITE HIGH FREQUENCY SPECTRUM																
	SPLITTERS-REMOTE SITE																
		Remote Site Line Share BellSouth Owned Splitter, 24 Port	I		ULS	ULSRB	40.01	114.83	0.00	85.03	0.00		15.66				
		Remote Site Line Share Cable Pair Activation CLEC Owned at RS and Deactivation	I		ULS	ULSTG		95.66	0.00	68.25	0.00		15.66				
	END USER ORDERING-REMOTE SITE HIGH FREQUENCY SPECTRUM AKA REMOTE SITE LINE SHARING																
		Remote Site Line Share Line Activationfor End User Served at RS, BST Splitter	I		ULS	ULSRC	0.61	37.01	21.19	20.02	9.83		15.66				
		RS Line Share Line Activation for End User served at RS, CLEC Splitter	I		ULS	ULSTC	0.61	37.01	21.19	20.02	9.83		15.66				
		Remote Site Line Share Subsequent Activity-RS BST Owned Splitter	I		ULS	ULSRS		49.16	17.83				15.66				
		Remote Site Line Share Subsequent Activity-RS CLEC Owned Splitter	I		ULS	ULSTS		49.16	17.83				15.66				
UNBUNDLED DEDICATED TRANSPORT																	
	NOTE: INTEROFFICE CHANNEL DEDICATED TRANSPORT - minimum billing period - below DS3=one month, DS3/STS-1=four months																
	INTEROFFICE CHANNEL - DEDICATED TRANSPORT																
		Interoffice Channel - Dedicated Transport - 2-Wire Voice Grade - Per Mile per month			U1TVX	1L5XX	0.008838										
		Interoffice Channel - Dedicated Transport- 2- Wire Voice Grade - Facility Termination			U1TVX	U1TV2	21.13	40.54	27.41	16.74	6.90		15.66				
		Interoffice Channel - Dedicated Transpor t- 2-Wire Voice Grade Rev Bat. - Per Mile per month			U1TVX	1L5XX	0.008838										
		Interoffice Channel - Dedicated Transport- 2- Wire VG Rev Bat. - Facility Termination			U1TVX	U1TR2	21.13	40.54	27.41	16.74	6.90		15.66				
		Interoffice Channel - Dedicated Transport - 4-Wire Voice Grade - Per Mile per month			U1TVX	1L5XX	0.008838										
		Interoffice Channel - Dedicated Transport - 4- Wire Voice Grade - Facility Termination			U1TVX	U1TV4	18.73	40.54	27.41	16.74	6.90		15.66				
		Interoffice Channel - Dedicated Transport - 56 kbps - per mile per month			U1TDX	1L5XX	0.008838										
		Interoffice Channel - Dedicated Transport - 56 kbps - Facility Termination			U1TDX	U1TD5	15.12	40.54	27.41	16.74	6.90		15.66				
		Interoffice Channel - Dedicated Transport - 64 kbps - per mile per month			U1TDX	1L5XX	0.008838										
		Interoffice Channel - Dedicated Transport - 64 kbps - Facility Termination			U1TDX	U1TD6	15.12	40.54	27.41	16.74	6.90		15.66				
		Interoffice Channel - Dedicated Channel - DS1 - Per Mile per month			U1TD1	1L5XX	0.18										
		Interoffice Channel - Dedicated Tranport - DS1 - Facility Termination			U1TD1	U1TF1	60.16	89.27	81.81	16.35	14.44		15.66				
		Interoffice Channel - Dedicated Transport - DS3 - Per Mile per month			U1TD3	1L5XX	4.09										
		Interoffice Channel - Dedicated Transport - DS3 - Facility Termination per month			U1TD3	U1TF3	703.52	278.75	162.76	60.20	58.46		15.66				
		Interoffice Channel - Dedicated Transport - STS-1 - Per Mile per month			U1TS1	1L5XX	4.09										
		Interoffice Channel - Dedicated Transport - STS-1 - Facility Termination			U1TS1	U1TFS	701.37	278.75	162.76	60.20	58.46		15.66				

UNBUNDLED NETWORK ELEMENTS - Alabama														Attachment: 2		Exhibit: B	
CATEGORY		RATE ELEMENTS	Interim	Zone	BCS	USOC	RATES ($)					Svc Order Submitted Elec per LSR	Svc Order Submitted Manually per LSR	Incremental Charge - Manual Svc Order vs. Electronic-1st	Incremental Charge - Manual Svc Order vs. Electronic-Add'l	Incremental Charge - Manual Svc Order vs. Electronic-Disc 1st	Incremental Charge - Manual Svc Order vs. Electronic-Disc Add'l
							Rec	Nonrecurring		Nonrecurring Disconnect		OSS Rates($)					
								First	Add'l	First	Add'l	SOMEC	SOMAN	SOMAN	SOMAN	SOMAN	SOMAN
	LOCAL CHANNEL - DEDICATED TRANSPORT																
	NOTE: LOCAL CHANNEL DEDICATED TRANSPORT - minimum billing period = below DS3=one month, DS3/STS-1=four months																
		Local Channel - Dedicated - 2-Wire Voice Grade			ULDVX	ULDV2	13.97	193.10	33.17	36.64	3.20		15.66				
		Local Channel - Dedicated - 2-Wire Voice Grade Rev Bat			ULDVX	ULDR2	13.97	193.10	33.17	36.64	3.20		15.66				
		Local Channel - Dedicated - 4-Wire Voice Grade			ULDVX	ULDV4	14.93	193.53	33.60	27.11	3.67		15.66				
		Local Channel - Dedicated - DS1 - Zone 1		1	ULDD1	ULDF1	35.76	177.47	153.72	22.19	15.26		15.66				
		Local Channel - Dedicated - DS1 - Zone 2		2	ULDD1	ULDF1	49.98	177.47	153.72	22.19	15.26		15.66				
		Local Channel - Dedicated - DS1 - Zone 3		3	ULDD1	ULDF1	107.63	177.47	153.72	22.19	15.26		15.66				
		Local Channel - Dedicated - DS3 - Per Mile per month			ULDD3	1L5NC	6.92										
		Local Channel - Dedicated - DS3 - Facility Termination			ULDD3	ULDF3	416.54	451.52	263.94	119.49	83.58		15.66				
		Local Channel - Dedicated - STS-1- Per Mile per month			ULDS1	1L5NC	6.92										
		Local Channel - Dedicated - STS-1 - Facility Termination			ULDS1	ULDFS	408.49	451.52	263.94	119.49	83.58		15.66				
DARK FIBER																	
		Dark Fiber, Four Fiber Strands, Per Route Mile or Fraction Thereof per month - Local Channel			UDF	1L5DC	60.32										
		NRC Dark Fiber - Local Channel			UDF	UDFC4		639.09	137.87	317.06	197.66		15.66				
		Dark Fiber, Four Fiber Strands, Per Route Mile or Fraction Thereof per month - Interoffice Channel			UDF	1L5DF	22.34										
		NRC Dark Fiber - Interoffice Channel			UDF	UDF14		639.09	137.87	317.06	197.66		15.66				
		Dark Fiber, Four Fiber Strands, Per Route Mile or Fraction Thereof per month - Local Loop			UDF	1L5DL	60.32										
		NRC Dark Fiber - Local Loop			UDF	UDFL4		639.09	137.87	317.06	197.66		15.66				
8XX ACCESS TEN DIGIT SCREENING																	
		8XX Access Ten Digit Screening, Per Call			OHD		0.00056										
		8XX Access Ten Digit Screening, Reservation Charge Per 8XX Number Reserved			OHD	N8R1X		2.58	0.44				15.66				
		8XX Access Ten Digit Screening, Per 8XX No. Established W/O POTS Translations			OHD			5.94	0.81	4.57	0.54		15.66				
		8XX Access Ten Digit Screening, Per 8XX No. Established With POTS Translations			OHD	N8FTX		5.94	0.81	4.57	0.54		15.66				
		8XX Access Ten Digit Screening, Customized Area of Service Per 8XX Number			OHD	N8FCX		2.58	1.29				15.66				
		8XX Access Ten Digit Screening, Multiple InterLATA CXR Routing Per CXR Requested Per 8XX No.			OHD	N8FMX		3.02	1.73				15.66				
		8XX Access Ten Digit Screening, Change Charge Per Request			OHD	N8FAX		3.02	0.44				15.66				
		8XX Access Ten Digit Screening, Call Handling and Destination Features			OHD	N8FDX		2.58					15.66				
		8XX Access Ten Digit Screening, w/ 8FL No. Delivery			OHD		0.000565										
		8XX Access Ten Digit Screening, w/ POTS No. Delivery			OHD		0.000565										
LINE INFORMATION DATA BASE ACCESS (LIDB)																	
		LIDB Common Transport Per Query			OQT		0.00002										
		LIDB Validation Per Query			OQU		0.012002										
		LIDB Originating Point Code Establishment or Change			OQT, OQU	NRPBX		34.32		42.08			15.66				
SIGNALING (CCS7)																	
		CCS7 Signaling Connection, Per 56Kbps Facility					15.46	35.53	35.53	16.44	16.44		15.66				
		CCS7 Signaling Termination, Per STP Port			UDB	PT8SX	130.83										
		CCS7 Signaling Usage, Per Call Setup Message					0.0000142										
		CCS7 Signaling Usage, Per TCAP Message			UDB		0.0000569										
		CCS7 Signaling Connection, Per link (A link)			UDB	TPP++	15.46	35.53	35.53	16.44	16.44		15.66				
		CCS7 Signaling Connection, Per link (B link) (also known as D link)			UDB	TPP++	15.46	35.53	35.53	16.44	16.44		15.66				
		CCS7 Signaling Usage, Per ISUP Message			UDB		0.0000142										
		CCS7 Signaling Usage Surrogate, per link per LATA			UDB	STU56	650.33										
		CCS7 Signaling Point Code, per Originating Point Code Establishment or Change, per STP affected			UDB	CCAPO		29.01	29.01	35.57	35.57		15.66				
E911 SERVICE																	
		Local Channel - Dedicated - 2-wr Voice Grade					13.97	193.10	33.17	36.64	3.20		15.66				
		Interoffice Transport - Dedicated - 2-wr Voice Grade Per Mile					0.008838										

UNBUNDLED NETWORK ELEMENTS - Alabama														Attachment: 2		Exhibit: B	
CATEGORY		RATE ELEMENTS	Interim	Zone	BCS	USOC	RATES ($)					Svc Order Submitted Elec per LSR	Svc Order Submitted Manually per LSR	Incremental Charge - Manual Svc Order vs. Electronic-1st	Incremental Charge - Manual Svc Order vs. Electronic-Add'l	Incremental Charge - Manual Svc Order vs. Electronic-Disc 1st	Incremental Charge - Manual Svc Order vs. Electronic-Disc Add'l
							Rec	Nonrecurring		Nonrecurring Disconnect		OSS Rates($)					
								First	Add'l	First	Add'l	SOMEC	SOMAN	SOMAN	SOMAN	SOMAN	SOMAN
		Interoffice Transport - Dedicated - 2-wr Voice Grade Per Facility Termination					21.13	40.54	27.41	16.74	6.90		15.66				
		Local Channel - Dedicated - DS1 - Zone 1					35.76	177.47	153.72	22.19	15.26		15.66				
		Local Channel - Dedicated - DS1 - Zone 2					49.98	177.47	153.72	22.19	15.26		15.66				
		Local Channel - Dedicated - DS1 - Zone 3					107.63	177.47	153.72	22.19	15.26		15.66				
		Interoffice Transport - Dedicated - DS1 Per Mile					0.18										
		Interoffice Transport - Dedicated - DS1 Per Facility Termination					60.16	89.27	81.81	16.35	14.44		15.66				
CALLING NAME (CNAM) SERVICE																	
		CNAM For DB Owners - Service Establishment			OQV			22.95		21.11							
		CNAM For Non DB Owners - Service Establishment			OQV			22.95		21.11							
		CNAM For DB Owners - Service Provisioning With Point Code Establishment			OQV			990.88	732.84	268.93	197.74						
		CNAM For Non DB Owners - Service Provisioning With Point Code Establishment			OQV			342.33	245.14	275.25	197.74						
		CNAM for DB Owners, Per Query			OQV		0.000902										
		CNAM for Non DB Owners, Per Query			OQV		0.000902										
LNP Query Service																	
		LNP Charge Per query					0.000757										
		LNP Service Establishment Manual						12.52		11.51			15.66				
		LNP Service Provisioning with Point Code Establishment						593.49	303.20	268.93	197.74		15.66				
OPERATOR CALL PROCESSING																	
		Oper. Call Processing - Oper. Provided, Per Min. - Using BST LIDB					1.20										
		Oper. Call Processing - Oper. Provided, Per Min. - Using Foreign LIDB					1.24										
		Oper. Call Processing - Fully Automated, per Call - Using BST LIDB					0.20										
		Oper. Call Processing - Fully Automated, per Call - Using Foreign LIDB					0.20										
INWARD OPERATOR SERVICES																	
		Inward Operator Services - Verification, Per Minute					1.15										
		Inward Operator Services - Verification and Emergency Interrupt - Per Minute					1.15										
BRANDING - OPERATOR CALL PROCESSING																	
	Facility based CLEC																
		Recording of Custom Branded OA Announcement				CBAOS		7,000.00	7,000.00				15.66				
		Loading of Custom Branded OA Announcement per shelf/NAV per OCN				CBAOL		500.00	500.00				15.66				
	UNEP CLEC																
		Recording of Custom Branded OA Announcement						7,000.00	7,000.00				15.66				
		Loading of Custom Branded OA Announcement per shelf/NAV per OCN						500.00	500.00				15.66				
	Unbranding via OLNS for UNEP CLEC																
		Loading of OA per OCN (Regional)						1,200.00	1,200.00				15.66				
DIRECTORY ASSISTANCE SERVICES																	
	DIRECTORY ASSISTANCE ACCESS SERVICE																
		Directory Assistance Access Service Calls, Charge Per Call					0.275										
	DIRECTORY ASSISTANCE CALL COMPLETION ACCESS SERVICE (DACC)																
		Directory Assistance Call Completion Access Service (DACC), Per Call Attempt					0.10										
	NUMBER SERVICES INTERCEPT ACCESS SERVICE																
DIRECTORY ASSISTANCE SERVICES																	
	DIRECTORY ASSISTANCE DATA BASE SERVICE (DADS)																
		Directory Assistance Data Base Service Charge Per Listing					0.04										
		Directory Assistance Data Base Service, per month				DBSOF	150.00										
BRANDING - DIRECTORY ASSISTANCE																	
	Facility Based CLEC																

UNBUNDLED NETWORK ELEMENTS - Alabama														Attachment: 2		Exhibit: B	
CATEGORY		RATE ELEMENTS	Interim	Zone	BCS	USOC	RATES ($)					Svc Order Submitted Elec per LSR	Svc Order Submitted Manually per LSR	Incremental Charge - Manual Svc Order vs. Electronic-1st	Incremental Charge - Manual Svc Order vs. Electronic-Add'l	Incremental Charge - Manual Svc Order vs. Electronic-Disc 1st	Incremental Charge - Manual Svc Order vs. Electronic-Disc Add'l
							Rec	Nonrecurring		Nonrecurring Disconnect		OSS Rates($)					
								First	Add'l	First	Add'l	SOMEC	SOMAN	SOMAN	SOMAN	SOMAN	SOMAN
		Recording and Provisioning of DA Custom Branded Announcement			AMT	CBADA		3,000.00	3,000.00				15.66				
		Loading of Custom Branded Announcement per Switch per OCN			AMT	CBADC		1,170.00	1,170.00				15.66				
	UNEP CLEC																
		Recording of DA Custom Branded Announcement						3,000.00	3,000.00				15.66				
		Loading of DA Custom Branded Announcement per Switch per OCN						1,170.00	1,170.00				15.66				
	Unbranding via OLNS for UNEP CLEC																
		Loading of DA per OCN (1 OCN per Order)						420.00	420.00				15.66				
		Loading of DA per Switch per OCN						16.00	16.00				15.66				
SELECTIVE ROUTING																	
		Selective Routing Per Unique Line Class Code Per Request Per Switch				USRCR		84.70	84.70	14.11	14.11		15.66				
VIRTUAL COLLOCATION																	
		Virtual Collocation-2 Wire Cross Connects (Loop) for Line Splitting			UEPSR, UEPSB	VE1LS	0.03	12.30	11.80	6.03	5.44		15.66				
PHYSICAL COLLOCATION																	
		Physical Collocation-2 Wire Cross Connects (Loop) for Line Splitting			UEPSR, UEPSB	PE1LS	0.03	12.30	11.80	6.03	5.44		15.66				
AIN SELECTIVE CARRIER ROUTING																	
		Regional Service Establishment			SRC	SRCEC		101,098.91		8,590.70			15.66				
		End Office Establishment			SRC	SRCEO		169.88	169.88	1.70	1.70		15.66				
		Query NRC, per query			SRC		0.002749										
AIN - BELLSOUTH AIN SMS ACCESS SERVICE																	
		AIN SMS Access Service - Service Establishment, Per State, Initial Setup			A1N	CAMSE		39.44	39.44	40.69	40.69		15.66				
		AIN SMS Access Service - Port Connection - Dial/Shared Access			A1N	CAMDP		7.83	7.83	9.09	9.09		15.66				
		AIN SMS Access Service - Port Connection - ISDN Access			A1N	CAM1P		7.83	7.83	9.09	9.09		15.66				
		AIN SMS Access Service - User Identification Codes - Per User ID Code			A1N	CAMAU		35.00	35.00	27.06	27.06		15.66				
		AIN SMS Access Service - Security Card, Per User ID Code, Initial or Replacement			A1N	CAMRC		41.88	41.88	11.71	11.71		15.66				
		AIN SMS Access Service - Storage, Per Unit (100 Kilobytes)					0.002188										
		AIN SMS Access Service - Session, Per Minute					0.59										
		AIN SMS Access Service - Company Performed Session, Per Minute					0.73										
AIN - BELLSOUTH AIN TOOLKIT SERVICE																	
		AIN Toolkit Service - Service Establishment Charge, Per State, Initial Setup			CAM	BAPSC		39.44	39.44	40.69	40.69		15.66				
		AIN Toolkit Service - Training Session, Per Customer				BAPVX		4,202.17	4,202.17				15.66				
		AIN Toolkit Service - Trigger Access Charge, Per Trigger, Per DN, Term. Attempt				BAPTT		7.83	7.83	9.09	9.09		15.66				
		AIN Toolkit Service - Trigger Access Charge, Per Trigger, Per DN, Off-Hook Delay				BAPTD		7.83	7.83	9.09	9.09		15.66				
		AIN Toolkit Service - Trigger Access Charge, Per Trigger, Per DN, Off-Hook Immediate				BAPTM		7.83	7.83	9.09	9.09		15.66				
		AIN Toolkit Service - Trigger Access Charge, Per Trigger, Per DN, 10-Digit PODP				BAPTO		34.47	34.47	14.36	14.36		15.66				
		AIN Toolkit Service - Trigger Access Charge, Per Trigger, Per DN, CDP				BAPTC		34.47	34.47	14.36	14.36		15.66				
		AIN Toolkit Service - Trigger Access Charge, Per Trigger, Per DN, Feature Code				BAPTF		34.47	34.47	14.36	14.36		15.66				
		AIN Toolkit Service - Query Charge, Per Query					0.05										
		AIN Toolkit Service - Type 1 Node Charge, Per AIN Toolkit Subscription, Per Node, Per Query					0.00582										
		AIN Toolkit Service - SCP Storage Charge, Per SMS Access Account, Per 100 Kilobytes					0.05										

CATEGORY		RATE ELEMENTS	Interim	Zone	BCS	USOC	RATES ($)					Svc Order Submitted Elec per LSR	Svc Order Submitted Manually per LSR	Attachment: 2 Incremental Charge - Manual Svc Order vs. Electronic-1st	Incremental Charge - Manual Svc Order vs. Electronic-Add'l	Exhibit: B Incremental Charge - Manual Svc Order vs. Electronic-Disc 1st	Incremental Charge - Manual Svc Order vs. Electronic-Disc Add'l
							Rec	Nonrecurring		Nonrecurring Disconnect		OSS Rates($)					
								First	Add'l	First	Add'l	SOMEC	SOMAN	SOMAN	SOMAN	SOMAN	SOMAN
		AIN Toolkit Service - Monthly report - Per AIN Toolkit Service Subscription			CAM	BAPMS	10.17	7.83	7.83	5.50	5.50		15.66				
		AIN Toolkit Service - Special Study - Per AIN Toolkit Service Subscription			CAM	BAPLS	2.87	8.66	8.66				15.66				
		AIN Toolkit Service - Call Event Report - Per AIN Toolkit Service Subscription			CAM	BAPDS	7.39	7.83	7.83	5.50	5.50		15.66				
		AIN Toolkit Service - Call Event Special Study - Per AIN Toolkit Service Subscription			CAM	BAPES	0.10	8.66	8.66				15.66				
ENHANCED EXTENDED LINK (EELs)																	
	NOTE: The monthly recurring and non-recurring charges below will apply and the Switch-As-Is Charge will not apply for EELs provisioned as ' Ordinarily Combined' Network Elements.																
	NOTE: The monthly recurring and the Switch-As-Is Charge and not the non-recurring charges below will apply for EELs provisioned as ' Currently Combined' Network Elements.																
	NOTE: Minimum billing is one month for DS1 and below and three months above DS1 services.																
	2-WIRE VOICE GRADE EXTENDED LOOP WITH DEDICATED DS1 INTEROFFICE TRANSPORT (EEL)																
		First 2-Wire VG Loop(SL2) in a DS1 Interofficed Transport Combination - Zone 1		1	UNCVX	UEAL2	14.38	88.00	55.00	47.24	7.44		15.66				
		First 2-Wire VG Grade Loop(SL2) in a DS1 Interofficed Transport Combination - Zone 2		2	UNCVX	UEAL2	22.85	88.00	55.00	47.24	7.44		15.66				
		First 2-Wire VG Grade Loop(SL2) in a DS1 Interofficed Transport Combination - Zone 3		3	UNCVX	UEAL2	36.14	88.00	55.00	47.24	7.44		15.66				
		Interoffice Transport - Dedicated - DS1 combination - Per Mile per month			UNC1X	1L5XX	0.18										
		Interoffice Transport - Dedicated - DS1 combination - Facility Termination per month			UNC1X	U1TF1	60.16	89.27	81.81	16.35	14.44		15.66				
		DS1 Channelization System Per Month			UNC1X	MQ1	101.06	91.04	62.57	10.54	9.79		15.66				
		Voice Grade COCI - DS1 To Ds0 Interface - Per Month			UNCVX	1D1VG	0.53	6.58	4.72				15.66				
		Each Additional 2-Wire VG Loop(SL 2) in the same DS1 Interoffice Transport Combination - Zone 1		1	UNCVX	UEAL2	14.38	88.00	55.00	47.24	7.44		15.66				
		Each Additional 2-Wire VG Loop(SL2) in the same DS1 Interoffice Transport Combination - Zone 2		2	UNCVX	UEAL2	22.85	88.00	55.00	47.24	7.44		15.66				
		Each Additional 2-Wire VG Loop(SL2) in the same DS1 Interoffice Transport Combination - Zone 3		3	UNCVX	UEAL2	36.14	88.00	55.00	47.24	7.44		15.66				
		Voice Grade COCI - DS1 to DS0 Channel System combination - per month			UNCVX	1D1VG	0.53	6.58	4.72				15.66				
		Nonrecurring Currently Combined Network Elements Switch -As-Is Charge			UNC1X	UNCCC		5.59	5.59	6.98	6.98		15.66				
	4-WIRE VOICE GRADE EXTENDED LOOP WITH DEDICATED DS1 INTEROFFICE TRANSPORT (EEL)																
		First 4-Wire Analog Voice Grade Loop in a DS1 Interoffice Transport Combination - Zone 1		1	UNCVX	UEAL4	25.34	131.97	94.51	59.14	14.50		15.66				
		First 4-Wire Analog Voice Grade Loop in a DS1 Interoffice Transport Combination - Zone 2		2	UNCVX	UEAL4	38.58	131.97	94.51	59.14	14.50		15.66				
		First 4-Wire Analog Voice Grade Loop in a DS1 Interoffice Transport Combination - Zone 3		3	UNCVX	UEAL4	60.02	131.97	94.51	59.14	14.50		15.66				
		Interoffice Transport - Dedicated - DS1 combination - Per Mile Per Month			UNC1X	1L5XX	0.18										
		Interoffice Transport - Dedicated - DS1 - Facility Termination Per Month			UNC1X	U1TF1	60.16	89.27	81.81	16.35	14.44		15.66				
		Channelization - Channel System DS1 to DS0 combination Per Month			UNC1X	MQ1	101.06	91.04	62.57	10.54	9.79		15.66				
		Voice Grade COCI - DS1 to DS0 Channel System combination - per month			UNCVX	1D1VG	0.53	6.58	4.72				15.66				
		Additional 4-Wire Analog Voice Grade Loop in same DS1 Interoffice Transport Combination - Zone 1		1	UNCVX	UEAL4	25.34	131.97	94.51	59.14	14.50		15.66				
		Additional 4-Wire Analog Voice Grade Loop in same DS1 Interoffice Transport Combination - Zone 2		2	UNCVX	UEAL4	38.58	131.97	94.51	59.14	14.50		15.66				
		Additional 4-Wire Analog Voice Grade Loop in same DS1 Interoffice Transport Combination - Zone 3		3	UNCVX	UEAL4	60.02	131.97	94.51	59.14	14.50		15.66				
		Voice Grade COCI - DS1 to DS0 Channel System combination - per month			UNCVX	1D1VG	0.53	6.58	4.72				15.66				

UNBUNDLED NETWORK ELEMENTS - Alabama														Attachment: 2		Exhibit: B	
CATEGORY		RATE ELEMENTS	Interim	Zone	BCS	USOC	RATES ($)					Svc Order Submitted Elec per LSR	Svc Order Submitted Manually per LSR	Incremental Charge - Manual Svc Order vs. Electronic-1st	Incremental Charge - Manual Svc Order vs. Electronic-Add'l	Incremental Charge - Manual Svc Order vs. Electronic-Disc 1st	Incremental Charge - Manual Svc Order vs. Electronic-Disc Add'l
							Rec	Nonrecurring		Nonrecurring Disconnect		OSS Rates($)					
								First	Add'l	First	Add'l	SOMEC	SOMAN	SOMAN	SOMAN	SOMAN	SOMAN
		Nonrecurring Currently Combined Network Elements Switch -As-Is Charge			UNC1X	UNCCC		5.59	5.59	6.98	6.98		15.66				
	4-WIRE 56 KBPS EXTENDED DIGITAL LOOP WITH DEDICATED DS1 INTEROFFICE TRANSPORT (EEL)																
		First 4-Wire 56Kbps Digital Grade Loop in a DS1 Interoffice Transport Combination - Zone 1		1	UNCDX	UDL56	26.09	126.27	88.80	59.14	14.50		15.66				
		First 4-wire 56Kbps Digital Grade Loop in a DS1 Interoffice Transport Combination - Zone 2		2	UNCDX	UDL56	35.95	126.27	88.80	59.14	14.50		15.66				
		First 4-Wire 56Kbps Digital Grade Loop in a DS1 Interoffice Transport Combination - Zone 3		3	UNCDX	UDL56	37.88	126.27	88.80	59.14	14.50		15.66				
		Interoffice Transport - Dedicated - DS1 combination - Per Mile Per Month			UNC1X	1L5XX	0.18										
		Interoffice Transport - Dedicated - DS1 - combination Facility Termination Per Month			UNC1X	U1TF1	60.16	89.27	81.81	16.35	14.44		15.66				
		Channelization - Channel System DS1 to DS0 combination Per Month			UNC1X	MQ1	101.06	91.04	62.57	10.54	9.79		15.66				
		OCU-DP COCI (data) - DS1 to DS0 Channel System - per month (2.4-64kbs)			UNCDX	1D1DD	1.12	6.58	4.72				15.66				
		Additional 4-Wire 56Kbps Digital Grade Loopin same DS1 Interoffice Transport Combination - Zone 1		1	UNCDX	UDL56	26.09	126.27	88.80	59.14	14.50		15.66				
		Additional 4-Wire 56Kbps Digital Grade Loopin same DS1 Interoffice Transport Combination - Zone 2		2	UNCDX	UDL56	35.95	126.27	88.80	59.14	14.50		15.66				
		Additional 4-Wire 56Kbps Digital Grade Loopin same DS1 Interoffice Transport Combination - Zone 3		3	UNCDX	UDL56	37.88	126.27	88.80	59.14	14.50		15.66				
		OCU-DP COCI (data) - DS1 to DS0 Channel System - combination per month (2.4-64kbs)			UNCDX	1D1DD	1.12	6.58	4.72				15.66				
		Nonrecurring Currently Combined Network Elements Switch -As-Is Charge			UNC1X	UNCCC		5.59	5.59	6.98	6.98		15.66				
	4-WIRE 64 KBPS EXTENDED DIGITAL LOOP WITH DEDICATED DS1 INTEROFFICE TRANSPORT (EEL)																
		First 4-Wire 64Kbps Digital Grade Loop in a DS1 Interoffice Transport Combination - Zone 1		1	UNCDX	UDL64	26.09	126.27	88.80	59.14	14.50		15.66				
		First 4-Wire 64Kbps Digital Grade Loop in a DS1 Interoffice Transport Combination - Zone 2		2	UNCDX	UDL64	35.95	126.27	88.80	59.14	14.50		15.66				
		First 4-Wire 64Kbps Digital Grade Loop in a DS1 Interoffice Transport Combination - Zone 3		3	UNCDX	UDL64	37.88	126.27	88.80	59.14	14.50		15.66				
		Interoffice Transport - Dedicated - DS1 combination - Per Mile Per Month			UNC1X	1L5XX	0.18										
		Interoffice Transport - Dedicated - DS1 combination - Facility Termination Per Month			UNC1X	U1TF1	60.16	89.27	81.81	16.35	14.44		15.66				
		Channelization - Channel System DS1 to DS0 combination Per Month			UNC1X	MQ1	101.06	91.04	62.57	10.54	9.79		15.66				
		OCU-DP COCI (data) - DS1 to DS0 Channel System combination - per month (2.4-64kbs)			UNCDX	1D1DD	1.12	6.58	4.72				15.66				
		Additional 4-Wire 64Kbps Digital Grade Loopin same DS1 Interoffice Transport Combination - Zone 1		1	UNCDX	UDL64	26.09	126.27	88.80	59.14	14.50		15.66				
		Additional 4-Wire 64Kbps Digital Grade Loopin same DS1 Interoffice Transport Combination - Zone 2		2	UNCDX	UDL64	35.95	126.27	88.80	59.14	14.50		15.66				
		Additional 4-Wire 64Kbps Digital Grade Loopin same DS1 Interoffice Transport Combination - Zone 3		3	UNCDX	UDL64	37.88	126.27	88.80	59.14	14.50		15.66				
		OCU-DP COCI (data) - DS1 to DS0 Channel System combination - per month (2.4-64kbs)			UNCDX	1D1DD	1.12	6.58	4.72				15.66				
		Nonrecurring Currently Combined Network Elements Switch -As-Is Charge			UNC1X	UNCCC		5.59	5.59	6.98	6.98		15.66				
	4-WIRE DS1 DIGITAL EXTENDED LOOP WITH DEDICATED DS1 INTEROFFICE TRANSPORT (EEL)																
		4-Wire DS1 Digital Loop in Combination with DS1 Interoffice Transport - Zone 1		1	UNC1X	USLXX	82.55	252.47	157.54	44.70	11.71		15.66				
		4-Wire DS1 Digital Loop in Combination with DS1 Interoffice Transport - Zone 2		2	UNC1X	USLXX	154.18	252.47	157.54	44.70	11.71		15.66				
		4-Wire DS1 Digital Loop in Combination with DS1 Interoffice Transport - Zone 3		3	UNC1X	USLXX	314.52	252.47	157.54	44.70	11.71		15.66				

UNBUNDLED NETWORK ELEMENTS - Alabama														Attachment: 2		Exhibit: B	
CATEGORY		RATE ELEMENTS	Interim	Zone	BCS	USOC	RATES ($)					Svc Order Submitted Elec per LSR	Svc Order Submitted Manually per LSR	Incremental Charge - Manual Svc Order vs. Electronic-1st	Incremental Charge - Manual Svc Order vs. Electronic-Add'l	Incremental Charge - Manual Svc Order vs. Electronic-Disc 1st	Incremental Charge - Manual Svc Order vs. Electronic-Disc Add'l
							Rec	Nonrecurring		Nonrecurring Disconnect		OSS Rates($)					
								First	Add'l	First	Add'l	SOMEC	SOMAN	SOMAN	SOMAN	SOMAN	SOMAN
		Interoffice Transport - Dedicated - DS1 combination - Per Mile Per Month			UNC1X	1L5XX	0.18										
		Interoffice Transport - Dedicated - DS1 combination - Facility Termination Per Month			UNC1X	U1TF1	60.16	89.27	81.81	16.35	14.44		15.66				
		Nonrecurring Currently Combined Network Elements Switch -As-Is Charge			UNC1X	UNCCC		5.59	5.59	6.98	6.98		15.66				
	4-WIRE DS1 DIGITAL EXTENDED LOOP WITH DEDICATED DS3 INTEROFFICE TRANSPORT (EEL)																
		First DS1Loop in DS3 Interoffice Transport Combination - Zone 1		1	UNC1X	USLXX	82.55	252.47	157.54	44.70	11.71		15.66				
		First DS1Loop in DS3 Interoffice Transport Combination - Zone 2		2	UNC1X	USLXX	154.18	252.47	157.54	44.70	11.71		15.66				
		First DS1Loop in DS3 Interoffice Transport Combination - Zone 3		3	UNC1X	USLXX	314.52	252.47	157.54	44.70	11.71		15.66				
		Interoffice Transport - Dedicated - DS3 combination - Per Mile Per Month			UNC3X	1L5XX	4.09										
		Interoffice Transport - Dedicated - DS3 - Facility Termination per month			UNC3X	U1TF3	703.52	278.75	162.76	60.20	58.46		15.66				
		DS3 to DS1 Channel System combination per month			UNC3X	MQ3	166.10	178.14	93.97	33.26	31.83		15.66				
		DS3 Interface Unit (DS1 COCI) combination per month			UNC1X	UC1D1	12.70	6.58	4.72								
		Additional DS1Loop in DS3 Interoffice Transport Combination - Zone 1		1	UNC1X	USLXX	82.55	252.47	157.54	44.70	11.71		15.66				
		Additional DS1Loop in DS3 Interoffice Transport Combination - Zone 2		2	UNC1X	USLXX	154.18	252.47	157.54	44.70	11.71		15.66				
		Additional DS1Loop in DS3 Interoffice Transport Combination - Zone 3		3	UNC1X	USLXX	314.52	252.47	157.54	44.70	11.71		15.66				
		DS3 Interface Unit (DS1 COCI) combination per month			UNC1X	UC1D1	12.70	6.58	4.72								
		Nonrecurring Currently Combined Network Elements Switch -As-Is Charge			UNC3X	UNCCC		5.59	5.59	6.98	6.98		15.66				
	2-WIRE VOICE GRADE EXTENDED LOOP/ 2 WIRE VOICE GRADE INTEROFFICE TRANSPORT (EEL)																
		2-WireVG Loop used with 2-wire VG Interoffice Transport Combination - Zone 1		1	UNCVX	UEAL2	14.38	88.00	55.00	47.24	7.44		15.66				
		2-WireVG Loop used with 2-wire VG Interoffice Transport Combination - Zone 2		2	UNCVX	UEAL2	22.85	88.00	55.00	47.24	7.44		15.66				
		2-WireVG Loop used with 2-wire VG Interoffice Transport Combination - Zone 3		3	UNCVX	UEAL2	36.14	88.00	55.00	47.24	7.44		15.66				
		Interoffice Transport - Dedicated - 2-wire VG combination - Per Mile Per Month			UNCVX	1L5XX	0.008838										
		Interoffice Transport - Dedicated - 2- Wire Voice Grade combination - Facility Termination per month			UNCVX	U1TV2	21.13	40.54	27.41	16.74	6.90		15.66				
		Nonrecurring Currently Combined Network Elements Switch -As-Is Charge			UNCVX	UNCCC		5.59	5.59	6.98	6.98		15.66				
	4-WIRE VOICE GRADE EXTENDED LOOP/ 4 WIRE VOICE GRADE INTEROFFICE TRANSPORT (EEL)																
		4-WireVG Loop used with 4-wire VG Interoffice Transport Combination - Zone 1		1	UNCVX	UEAL4	25.34	131.97	94.51	59.14	14.50		15.66				
		4-WireVG Loop used with 4-wire VG Interoffice Transport Combination - Zone 2		2	UNCVX	UEAL4	38.58	131.97	94.51	59.14	14.50		15.66				
		4-WireVG Loop used with 4-wire VG Interoffice Transport Combination - Zone 3		3	UNCVX	UEAL4	60.02	131.97	94.51	59.14	14.50		15.66				
		Interoffice Transport - Dedicated - 4-wire VG combination - Per Mile Per Month			UNCVX	1L5XX	0.008838										
		Interoffice Transport - Dedicated - 4- Wire Voice Grade combination - Facility Termination per month			UNCVX	U1TV4	18.73	40.54	27.41	16.74	6.90		15.66				
		Nonrecurring Currently Combined Network Elements Switch -As-Is Charge			UNCVX	UNCCC		5.59	5.59	6.98	6.98		15.66				
	DS3 DIGITAL EXTENDED LOOP WITH DEDICATED DS3 INTEROFFICE TRANSPORT (EEL)																
		High Capacity Unbundled Local Loop - DS3 combination - Per Mile per month			UNC3X	1L5ND	8.38										
		High Capacity Unbundled Local Loop - DS3 combination - Facility Termination per month			UNC3X	UE3PX	308.98	451.52	263.94	119.49	83.58		15.66				

CATEGORY	RATE ELEMENTS	Interim	Zone	BCS	USOC	RATES ($)					Svc Order Submitted Elec per LSR	Svc Order Submitted Manually per LSR	Attachment: 2 Incremental Charge - Manual Svc Order vs. Electronic-1st	Attachment: 2 Incremental Charge - Manual Svc Order vs. Electronic-Add'l	Exhibit: B Incremental Charge - Manual Svc Order vs. Electronic-Disc 1st	Exhibit: B Incremental Charge - Manual Svc Order vs. Electronic-Disc Add'l
						Rec	Nonrecurring		Nonrecurring Disconnect		OSS Rates($)					
							First	Add'l	First	Add'l	SOMEC	SOMAN	SOMAN	SOMAN	SOMAN	SOMAN
	Interoffice Transport - Dedicated - DS3 - Per Mile per month			UNC3X	1L5XX	4.09										
	Interoffice Transport - Dedicated - DS3 combination - Facility Termination per per month			UNC3X	U1TF3	703.52	278.75	162.76	60.20	58.46		15.66				
	Nonrecurring Currently Combined Network Elements Switch -As-Is Charge			UNC3X	UNCCC		5.59	5.59	6.98	6.98		15.66				
	STS1 DIGITAL EXTENDED LOOP WITH DEDICATED STS1 INTEROFFICE TRANSPORT (EEL)															
	High Capacity Unbundled Local Loop - STS1 combination - Per Mile per month			UNCSX	1L5ND	8.38										
	High Capacity Unbundled Local Loop - STS1 combination - Facility Termination per month			UNCSX	UDLS1	319.83	451.52	263.94	119.49	83.58		15.66				
	Interoffice Transport - Dedicated - STS1 combination - Per Mile per month			UNCSX	1L5XX	4.09										
	Interoffice Transport - Dedicated - STS1 combination - Facility Termination per month			UNCSX	U1TFS	701.37	278.75	162.76	60.20	58.46		15.66				
	Nonrecurring Currently Combined Network Elements Switch -As-Is Charge			UNCSX	UNCCC		5.59	5.59	6.98	6.98		15.66				
	2-WIRE ISDN EXTENDED LOOP WITH DS1 INTEROFFICE TRANSPORT (EEL)															
	First 2-Wire ISDN Loop in a DS1 Interoffice Combination Transport - Zone 1		1	UNCNX	U1L2X	21.88	117.24	79.77	52.88	10.54		15.66				
	First 2-Wire ISDN Loop in a DS1 Interoffice Combination Transport - Zone 2		2	UNCNX	U1L2X	32.85	117.24	79.77	52.88	10.54		15.66				
	First 2-Wire ISDN Loop in a DS1 Interoffice Combination Transport - Zone 3		3	UNCNX	U1L2X	48.55	117.24	79.77	52.88	10.54		15.66				
	Interoffice Transport - Dedicated - DS1 combination - Per Mile			UNC1X	1L5XX	0.18										
	Interoffice Transport - Dedicated - DS1 combintion - Facility Termination per month			UNC1X	U1TF1	60.16	89.27	81.81	16.35	14.44		15.66				
	Channelization - Channel System DS1 to DS0 combination - per month			UNC1X	MQ1	101.06	91.04	62.57	10.54	9.79		15.66				
	2-wire ISDN COCI (BRITE) - DS1 to DS0 Channel System combination - per month			UNCNX	UC1CA	2.41	6.58	4.72				15.66				
	Additional 2-wire ISDN Loop in same DS1Interoffice Transport Combination - Zone 1		1	UNCNX	U1L2X	21.88	117.24	79.77	52.88	10.54		15.66				
	Additional 2-wire ISDN Loop in same DS1Interoffice Transport Combination - Zone 2		2	UNCNX	U1L2X	32.85	117.24	79.77	52.88	10.54		15.66				
	Additional 2-wire ISDN Loop in same DS1Interoffice Transport Combination - Zone 3		3	UNCNX	U1L2X	48.55	117.24	79.77	52.88	10.54		15.66				
	2-wire ISDN COCI (BRITE) - DS1 to DS0 Channel System combintaion- per month			UNCNX	UC1CA	2.41	6.58	4.72								
	Nonrecurring Currently Combined Network Elements Switch -As-Is Charge			UNC1X	UNCCC		5.59	5.59	6.98	6.98		15.66				
	4-WIRE DS1 DIGITAL EXTENDED LOOP WITH DEDICATED STS-1 INTEROFFICE TRANSPORT (EEL)															
	First DS1 Loop in STS1 Interoffice Transport Combination - Zone 1		1	UNC1X	USLXX	82.55	252.47	157.54	44.70	11.71		15.66				
	First DS1 Loop in STS1 Interoffice Transport Combination - Zone 2		2	UNC1X	USLXX	154.18	252.47	157.54	44.70	11.71		15.66				
	First DS1 Loop in STS1 Interoffice Transport Combination - Zone 3		3	UNC1X	USLXX	314.52	252.47	157.54	44.70	11.71		15.66				
	Interoffice Transport - Dedicated - STS1 combination - Per Mile Per Month			UNCSX	1L5XX	4.09										
	Interoffice Transport - Dedicated - STS1 combination - Facility Termination			UNCSX	U1TFS	701.37	278.75	162.76	60.20	58.46		15.66				
	STS1 to DS1 Channel System conbination per month			UNCSX	MQ3	166.13	178.14	93.97	33.26	31.83		15.66				
	DS3 Interface Unit (DS1 COCI) combination per month			UNC1X	UC1D1	12.70	6.58	4.72								
	Additional DS1Loop in STS1 Interoffice Transport Combination - Zone 1		1	UNC1X	USLXX	82.55	252.47	157.54	44.70	11.71		15.66				
	Additional DS1Loop in STS1 Interoffice Transport Combination - Zone 2		2	UNC1X	USLXX	154.18	252.47	157.54	44.70	11.71		15.66				
	Additional DS1Loop in STS1 Interoffice Transport Combination - Zone 3		3	UNC1X	USLXX	314.52	252.47	157.54	44.70	11.71		15.66				

CATEGORY	RATE ELEMENTS	Interim	Zone	BCS	USOC	RATES ($)					Svc Order Submitted Elec per LSR	Svc Order Submitted Manually per LSR	Attachment: 2 Incremental Charge - Manual Svc Order vs. Electronic-1st	Attachment: 2 Incremental Charge - Manual Svc Order vs. Electronic-Add'l	Exhibit: B Incremental Charge - Manual Svc Order vs. Electronic-Disc 1st	Exhibit: B Incremental Charge - Manual Svc Order vs. Electronic-Disc Add'l
						Rec	Nonrecurring		Nonrecurring Disconnect				OSS Rates($)			
							First	Add'l	First	Add'l	SOMEC	SOMAN	SOMAN	SOMAN	SOMAN	SOMAN
	DS3 Interface Unit (DS1 COCI) combination per month			UNC1X	UC1D1	12.70	6.58	4.72								
	Nonrecurring Currently Combined Network Elements Switch -As-Is Charge			UNCSX	UNCCC		5.59	5.59	6.98	6.98		15.66				
	4-WIRE 56 KBPS DIGITAL EXTENDED LOOP WITH 56 KBPS INTEROFFICE TRANSPORT (EEL)															
	4-wire 56 kbps Loop/4-wire 56 kbps Interoffice Transport Combination - Zone 1		1	UNCDX	UDL56	26.09	126.27	88.80	59.14	14.50		15.66				
	4-wire 56 kbps Loop/4-wire 56 kbps Interoffice Transport Combination - Zone 2		2	UNCDX	UDL56	35.95	126.27	88.80	59.14	14.50		15.66				
	4-wire 56 kbps Loop/4-wire 56 kbps Interoffice Transport Combination - Zone 3		3	UNCDX	UDL56	37.88	126.27	88.80	59.14	14.50		15.66				
	Interoffice Transport - Dedicated - 4-wire 56 kbps combination - Per Mile			UNCDX	1L5XX	0.008838										
	Interoffice Transport - Dedicated - 4-wire 56 kbps combination - Facility Termination			UNCDX	U1TD5	15.12	40.54	27.41	16.74	6.90		15.66				
	Nonrecurring Currently Combined Network Elements Switch -As-Is Charge			UNCDX	UNCCC		5.59	5.59	6.98	6.98		15.66				
	4-WIRE 64 KBPS DIGITAL EXTENDED LOOP WITH 64 KBPS INTEROFFICE TRANSPORT (EEL)															
	4-wire 64 kbps Loop/4-wire 64 kbps Interoffice Transport Combination - Zone 1		1	UNCDX	UDL64	26.09	126.27	88.80	59.14	14.50		15.66				
	4-wire 64 kbps Loop/4-wire 64 kbps Interoffice Transport Combination - Zone 2		2	UNCDX	UDL64	35.95	126.27	88.80	59.14	14.50		15.66				
	4-wire 64 kbps Loop/4-wire 64 kbps Interoffice Transport Combination - Zone 3		3	UNCDX	UDL64	37.88	126.27	88.80	59.14	14.50		15.66				
	Interoffice Transport - Dedicated - 4-wire 64 kbps combination - Per Mile			UNCDX	1L5XX	0.008838										
	Interoffice Transport - Dedicated - 4-wire 64 kbps combination - Facility Termination			UNCDX	U1TD6	15.12	40.54	27.41	16.74	6.90		15.66				
	Nonrecurring Currently Combined Network Elements Switch -As-Is Charge			UNCDX	UNCCC		5.59	5.59	6.98	6.98		15.66				
ADDITIONAL NETWORK ELEMENTS																
	When used as a part of a currently combined facility, the non-recurrng charges do not apply, but a Switch As Is charge does apply.															
	When used as ordinarily combined network elements in All States, the non-recurring charges apply and the Switch As Is Charge does not.															
	Nonrecurring Currently Combined Network Elements "Switch As Is" Charge (One applies to each combination)															
	Nonrecurring Currently Combined Network Elements Switch -As-Is Charge - 2 wire/4-Wire VG			UNCVX	UNCCC		5.59	5.59	6.98	6.98		15.66				
	Nonrecurring Currently Combined Network Elements Switch -As-Is Charge - 56/64 kbps			UNCDX	UNCCC		5.59	5.59	6.98	6.98		15.66				
	Nonrecurring Currently Combined Network Elements Switch -As-Is Charge - DS1			UNC1X	UNCCC		5.59	5.59	6.98	6.98		15.66				
	Nonrecurring Currently Combined Network Elements Switch -As-Is Charge - DS3			UNC3X	UNCCC		5.59	5.59	6.98	6.98		15.66				
	Nonrecurring Currently Combined Network Elements Switch -As-Is Charge - STS1			UNCSX	UNCCC		5.59	5.59	6.98	6.98		15.66				
	NOTE: Local Channel - Dedicated Transport - minimum billing period - Below DS3=one month, DS3 and above=four months															
	Local Channel - Dedicated - 2-Wire Voice Grade			UNCVX	ULDV2	13.97	193.10	33.17	36.64	3.20		15.66				
	Local Channel - Dedicated - 4-Wire Voice Grade			UNCVX	ULDV4	14.93	193.53	33.60	37.11	3.67		15.66				
	Local Channel - Dedicated - DS1 per month Zone 1		1	UNC1X	ULDF1	35.76	177.47	153.72	22.19	15.26		15.66				
	Local Channel - Dedicated -DS1 Per Month Zone 2		2	UNC1X	ULDF1	49.98	177.47	153.72	22.19	15.26		15.66				
	Local Channel - Dedicated - DS1- Per Month Zone 3		3	UNC1X	ULDF1	107.63	177.47	153.72	22.19	15.26		15.66				
	Local Channel - Dedicated - DS3 - Per Mile per month			UNC3X	1L5NC	6.92										
	Local Channel - Dedicated - DS3 - Facility Termination			UNC3X	ULDF3	416.54	451.52	263.94	119.49	83.58		15.66				
	Local Channel - Dedicated - STS-1- Per Mile per month			UNCSX	1L5NC	6.92										
	Local Channel - Dedicated - STS-1 - Facility Termination			UNCSX	ULDFS	408.49	451.52	263.94	119.49	83.58		15.66				
	Optional Features & Functions:															
	Clear Channel Capability (SF/ESF) Option - Subsequent Activity - per DS1	I		ULDD1, U1TD1, UNC1X, USL	NRCCC		65.00					15.66				
	C-bit Parity Option - Subsequent Activity - per DS3	i		U1TD3, ULDD3, UE3, UNC3X	NRCC3		50.00					15.66				
	MULTIPLEXERS															

UNBUNDLED NETWORK ELEMENTS - Alabama														Attachment: 2		Exhibit: B	
CATEGORY	RATE ELEMENTS	Interim	Zone	BCS	USOC	RATES ($)					Svc Order Submitted Elec per LSR	Svc Order Submitted Manually per LSR	Incremental Charge - Manual Svc Order vs. Electronic-1st	Incremental Charge - Manual Svc Order vs. Electronic-Add'l	Incremental Charge - Manual Svc Order vs. Electronic-Disc 1st	Incremental Charge - Manual Svc Order vs. Electronic-Disc Add'l
						Rec	Nonrecurring		Nonrecurring Disconnect		OSS Rates($)					
							First	Add'l	First	Add'l	SOMEC	SOMAN	SOMAN	SOMAN	SOMAN	SOMAN
	NOTE: minimum billing period is one month for DS1 to DS0 Channel System and interfaces															
	NOTE: minimum billing period is three months for DS3 to DS1 Channel System and interfaces															
	DS1 to DS0 Channel System (with the higher-level connected to a collocation in the same SWC) per month			UXTD1	MQ1	101.06	91.04	62.57	10.54	9.79		15.66				
	DS1 to DS0 Channel System (used to channelize a DS1 Local Channel) per month			ULDD1	MQ1	101.06	91.04	62.57	10.54	9.79		15.66				
	DS1 to DS0 Channel System (used to channelize a DS1 Interoffice Channel) per month			U1TD1	MQ1	101.06	91.04	62.57	10.54	9.79		15.66				
	OCU-DP COCI (data) - DS1 to DS0 Channel System - per month (2.4-64kbs) used for a Local Loop			UDL	1D1DD	1.12	6.58	4.72				15.66				
	OCU-DP COCI (data) - DS1 to DS0 Channel System - per month (2.4-64kbs) used for connection to a channelized DS1 Local Channel in the same SWC as collocation			U1TUD	1D1DD	1.12	6.58	4.72				15.66				
	2-wire ISDN COCI (BRITE) - DS1 to DS0 Channel Systsem - per month for a Local Loop			UDN	UC1CA	2.41	6.58	4.72				15.66				
	2-wire ISDN COCI (BRITE) - DS1 to DS0 Channel Systsem - per month used for connection to a channelized DS1 Local Channel in the same SWC as collocation			U1TUB	UC1CA	2.41	6.58	4.72				15.66				
	Voice Grade COCI - DS1 to DS0 Channel System - per month used for a Local Loop			UEA	1D1VG	0.53	6.58	4.72				15.66				
	Voice Grade COCI - DS1 to DS0 Channel System - per month used for connection to a channelized DS1 Local Channel in the same SWC as collocation			U1TUC	1D1VG	0.53	6.58	4.72				15.66				
	DS3 to DS1 Channel System (with the higher level connected to a collocation in the same SWC) per month			UXTD3	MQ3	166.13	178.14	93.97	33.26	31.83		15.66				
	DS3 to DS1 Channel System (used to channelize a DS3 Local Channel) per month			ULDD3	MQ3	166.13	178.14	93.97	33.26	31.83		15.66				
	DS3 to DS1 Channel System (used to channelize a DS3 Interoffice Channel per month			U1TD3	MQ3	166.13	178.14	93.97	33.26	31.83		15.66				
	STS-1 to DS1 Channel System (with the higher level connected to a collocation in the same SWC) per month			UXTS1	MQ3	166.13	178.14	93.97	33.26	31.83		15.66				
	STS-1 to DS1 Channel System (used to channelize a STS-1 Local Channel) per month			ULDS1	MQ3	166.13	178.14	93.97	33.26	31.83		15.66				
	STS-1 to DS1 Channel System (used to channelize a STS-1 Interoffice Channel) per month			U1TS1	MQ3	166.13	178.14	93.97	33.26	31.83		15.66				
	DS1 COCI used with Loop per month			USL	UC1D1	12.70	6.58	4.72				15.66				
	DS1 COCI (used for connection to a channelized DS1 Local Channel in the same SWC as collocation) per month			U1TUA	UC1D1	12.70	6.58	4.72				15.66				
	DS1 COCI used with Interoffice Channel per month			U1TD1	UC1D1	12.70	6.58	4.72				15.66				
	Sub-Loop Feeder															
	Unbundled Sub-Loop Feeder Loop, 4-Wire DS1 - Zone 1		1	UNC1X	USBFG	55.09	101.85	64.38	62.05	17.40						
	Unbundled Sub-Loop Feeder Loop, 4-Wire DS1 - Zone 2		2	UNC1X	USBFG	124.69	101.85	64.38	62.05	17.40						
	Unbundled Sub-Loop Feeder Loop, 4-Wire DS1 - Zone 3		3	UNC1X	USBFG	294.62	101.85	64.38	62.05	17.40						
UNBUNDLED LOCAL EXCHANGE SWITCHING(PORTS)																
	Exchange Ports															
	NOTE: Although the Port Rate includes all available features in GA, KY, LA & TN, the desired features will need to be ordered using retail USOCs															
	2-WIRE VOICE GRADE LINE PORT RATES (RES)															
	Exchange Ports - 2-Wire Analog Line Port- Res.			UEPSR	UEPRL	1.38	2.38	2.27	1.42	1.33		15.66				
	Exchange Ports - 2-Wire Analog Line Port with Caller ID - Res.			UEPSR	UEPRC	1.38	2.38	2.27	1.42	1.33		15.66				
	Exchange Ports - 2-Wire Analog Line Port outgoing only - Res.			UEPSR	UEPRO	1.38	2.38	2.27	1.42	1.33		15.66				
	Exchange Ports - 2-Wire VG unbundled AL extended local dialing parity Port with Caller ID - Res.			UEPSR	UEPAR	1.38	2.38	2.27	1.42	1.33		15.66				
	Exchange Ports - 2-Wire VG unbundled res, low usage line port with Caller ID (LUM)			UEPSR	UEPAP	1.38	2.38	2.27	1.42	1.33		15.66				
	Exchange Ports - 2-Wire VG Alabama Residence Dialing Plan without Caller Id			UEPSR	UEPWA	1.38	2.38	2.27	1.42	1.33		15.66				

UNBUNDLED NETWORK ELEMENTS - Alabama														Attachment: 2		Exhibit: B	
CATEGORY	RATE ELEMENTS	Interim	Zone	BCS	USOC	RATES ($)					Svc Order Submitted Elec per LSR	Svc Order Submitted Manually per LSR	Incremental Charge - Manual Svc Order vs. Electronic-1st	Incremental Charge - Manual Svc Order vs. Electronic-Add'l	Incremental Charge - Manual Svc Order vs. Electronic-Disc 1st	Incremental Charge - Manual Svc Order vs. Electronic-Disc Add'l
						Rec	Nonrecurring		Nonrecurring Disconnect				OSS Rates($)			
							First	Add'l	First	Add'l	SOMEC	SOMAN	SOMAN	SOMAN	SOMAN	SOMAN
	2-Wire voice unbundled Low Usage Line Port without Caller ID Capability			UEPSR	UEPRT	1.38	2.38	2.27	1.42	1.33		15.66				
	Subsequent Activity			UEPSR	USASC	0.00	0.00	0.00				15.66				
FEATURES																
	All Available Vertical Features			UEPSR	UEPVF	1.98	0.00	0.00				15.66				
2-WIRE VOICE GRADE LINE PORT RATES (BUS)																
	Exchange Ports - 2-Wire Analog Line Port without Caller ID - Bus			UEPSB	UEPBL	1.38	2.38	2.27	1.42	1.33		15.66				
	Exchange Ports - 2-Wire VG unbundled Line Port with unbundled port with Caller+E484 ID - Bus.			UEPSB	UEPBC	1.38	2.38	2.27	1.42	1.33		15.66				
	Exchange Ports - 2-Wire Analog Line Port outgoing only - Bus.			UEPSB	UEPBO	1.38	2.38	2.27	1.42	1.33		15.66				
	Exchange Ports - 2-Wire VG unbundled AL extended local dialing parity Port with Caller ID - Bus.			UEPSB	UEPAW	1.38	2.38	2.27	1.42	1.33		15.66				
	Exhange Ports - 2-Wire VG unbundled incoming only port with Caller ID - Bus			UEPSB	UEPB1	1.38	2.38	2.27	1.42	1.33		15.66				
	Exchange Ports - 2-Wire Voice Alabama Business Dialing Plan without Caller ID			UEPSB	UEPWB	1.38	2.38	2.27	1.42	1.33		15.66				
	2-Wire voice unbundled Incoming Only Port without Caller ID Capability			UEPSB	UEPBE	1.38	2.38	2.27	1.42	1.33		15.66				
	Subsequent Activity			UEPSB	USASC	0.00	0.00	0.00				15.66				
FEATURES																
	All Available Vertical Features			UEPSB	UEPVF	1.98	0.00	0.00				15.66				
EXCHANGE PORT RATES (DID & PBX)																
	2-Wire VG Unbundled 2-Way PBX Trunk - Res			UEPSE	UEPRD	1.38	31.27	14.85	13.94	0.90		15.66				
	2-Wire VG Line Side Unbundled 2-Way PBX Trunk - Bus			UEPSP	UEPPC	1.38	31.27	14.85	13.94	0.90		15.66				
	2-Wire VG Line Side Unbundled Outward PBX Trunk - Bus			UEPSP	UEPPO	1.38	31.27	14.85	13.94	0.90		15.66				
	2-Wire VG Line Side Unbundled Incoming PBX Trunk - Bus			UEPSP	UEPP1	1.38	31.27	14.85	13.94	0.90		15.66				
	2-Wire Analog Long Distance Terminal PBX Trunk - Bus			UEPSP	UEPLD	1.38	31.27	14.85	13.94	0.90		15.66				
	2-Wire Voice Unbundled 2-Way PBX Alabama Calling Port			UEPSP	UEPA2	1.38	31.27	14.85	13.94	0.90		15.66				
	2-Wire Voice Unbundled PBX LD Terminal Ports			UEPSP	UEPLD	1.38	31.27	14.85	13.94	0.90		15.66				
	2-Wire Vice Unbundled 2-Way PBX Usage Port			UEPSP	UEPXA	1.38	31.27	14.85	13.94	0.90		15.66				
	2-Wire Voice Unbundled PBX Toll Terminal Hotel Ports			UEPSP	UEPXB	1.38	31.27	14.85	13.94	0.90		15.66				
	2-Wire Voice Unbundled PBX LD DDD Terminals Port			UEPSP	UEPXC	1.38	31.27	14.85	13.94	0.90		15.66				
	2-Wire Voice Unbundled PBX LD Terminal Switchboard Port			UEPSP	UEPXD	1.38	31.27	14.85	13.94	0.90		15.66				
	2-Wire Voice Unbundled PBX LD Terminal Switchboard IDD Capable Port			UEPSP	UEPXE	1.38	31.27	14.85	13.94	0.90		15.66				
	2-Wire Voice Unbundled 2-Way PBX Hotel/Hospital Economy Administrative Calling Port			UEPSP	UEPXL	1.38	31.27	14.85	13.94	0.90		15.66				
	2-Wire Voice Unbundled 2-Way PBX Hotel/Hospital Economy Room Calling Port			UEPSP	UEPXM	1.38	31.27	14.85	13.94	0.90		15.66				
	2-Wire Voice Unbundled 1-Way Outgoing PBX Hotel/Hospital Discount Room Calling Port			UEPSP	UEPXO	1.38	31.27	14.85	13.94	0.90		15.66				
	2-Wire Voice Unbundled 1-Way Outgoing PBX Measured Port			UEPSP	UEPXS	1.38	31.27	14.85	13.94	0.90		15.66				
	Subsequent Activity			UEPSP	USASC	0.00	0.00	0.00				15.66				
FEATURES																
	All Available Vertical Features			UEPSP UEPSE	UEPVF	1.98	0.00	0.00				15.66				
EXCHANGE PORT RATES (COIN)																
	Exchange Ports - Coin Port					1.38	2.38	2.27	1.42	1.33		15.66				
NOTE: Transmission/usage charges associated with POTS circuit switched usage will also apply to circuit switched voice and/or circuit switched data transmission by B-Channels associated with 2-wire ISDN ports.																
NOTE: Access to B Channel or D Channel Packet capabilities will be available only through BFR/New Business Request Process. Rates for the packet capabilities will be determined via the Bona Fide Request/New Business Request Process.																
UNBUNDLED LOCAL EXCHANGE SWITCHING(PORTS)																
EXCHANGE PORT RATES																
	Exchange Ports - 2-Wire DID Port			UEPEX	UEPP2	8.05	119.31	18.74	59.90	3.76		15.66				
	Exchange Ports - DDITS Port - 4-Wire DS1 Port with DID capability			UEPDD	UEPDD	60.09	202.02	95.69	72.59	2.46		15.66				
	Exchange Ports - 2-Wire ISDN Port (See Notes below.)			UEPTX UEPSX	U1PMA	9.79	72.77	52.99	47.79	10.74		15.66				
	All Features Offered			UEPTX UEPSX	UEPVF	1.98	0.00	0.00								
NOTE: Transmission/usage charges associated with POTS circuit switched usage will also apply to circuit switched voice and/or circuit switched data transmission by B-Channels associated with 2-wire ISDN ports.																

UNBUNDLED NETWORK ELEMENTS - Alabama														Attachment: 2		Exhibit: B	
CATEGORY	RATE ELEMENTS	Interim	Zone	BCS	USOC	RATES ($)					Svc Order Submitted Elec per LSR	Svc Order Submitted Manually per LSR	Incremental Charge - Manual Svc Order vs. Electronic-1st	Incremental Charge - Manual Svc Order vs. Electronic-Add'l	Incremental Charge - Manual Svc Order vs. Electronic-Disc 1st	Incremental Charge - Manual Svc Order vs. Electronic-Disc Add'l
						Rec	Nonrecurring		Nonrecurring Disconnect		OSS Rates($)					
							First	Add'l	First	Add'l	SOMEC	SOMAN	SOMAN	SOMAN	SOMAN	SOMAN
	NOTE: Access to B Channel or D Channel Packet capabilities will be available only through BFR/New Business Request Process. Rates for the packet capabilities will be determined via the Bona Fide Request/New Business Request Process.															
	Exchange Ports - 2-Wire ISDN Port -- Channel Profiles			UEPTX UEPSX	U1UMA	0.00	0.00	0.00								
	Exchange Ports - 4-Wire ISDN DS1 Port			UEPEX	UEPEX	84.32	203.81	101.56	79.18	20.06		15.66				
	UNBUNDLED PORT with REMOTE CALL FORWARDING CAPABILITY															
	UNBUNDLED REMOTE CALL FORWARDING SERVICE - RESIDENCE															
	Unbundled Remote Call Forwarding Service, Area Calling, Res			UEPVR	UERAC	1.38	2.38	2.27	1.42	1.33		15.66				
	Unbundled Remote Call Forwarding Service, Local Calling - Res			UEPVR	UERLC	1.38	2.38	2.27	1.42	1.33		15.66				
	Unbundled Remote Call Forwarding Service, InterLATA - Res			UEPVR	UERTE	1.38	2.38	2.27	1.42	1.33		15.66				
	Unbundled Remote Call Forwarding Service, IntraLATA - Res			UEPVR	UERTR	1.38	2.38	2.27	1.42	1.33		15.66				
	Non-Recurring															
	Unbundled Remote Call Forwarding Service - Conversion - Switch-as-is			UEPVR	USAC2		0.10	0.10				15.66				
	Unbundled Remote Call Forwarding Service - Conversion with allowed change (PIC and LPIC)			UEPVR	USACC		0.10	0.10				15.66				
	UNBUNDLED REMOTE CALL FORWARDING - Bus															
	Unbundled Remote Call Forwarding Service, Area Calling - Bus			UEPVB	UERAC	1.38	2.38	2.27	1.42	1.33		15.66				
	Unbundled Remote Call Forwarding Service, Local Calling - Bus			UEPVB	UERLC	1.38	2.38	2.27	1.42	1.33		15.66				
	Unbundled Remote Call Forwarding Service, InterLATA - Bus			UEPVB	UERTE	1.38	2.38	2.27	1.42	1.33		15.66				
	Unbundled Remote Call Forwarding Service, IntraLATA - Bus			UEPVB	UERTR	1.38	2.38	2.27	1.42	1.33		15.66				
	Unbundled Remote Call Forwarding Service Expanded and Exception Local Calling			UEPVB	UERVJ	1.38	2.38	2.27	1.42	1.33		15.66				
	Non-Recurring															
	Unbundled Remote Call Forwarding Service - Conversion - Switch-as-is			UEPVB	USAC2		0.10	0.10				15.66				
	Unbundled Remote Call Forwarding Service - Conversion with allowed change (PIC and LPIC)			UEPVB	USACC		0.10	0.10				15.66				
UNBUNDLED LOCAL SWITCHING, PORT USAGE																
	End Office Switching (Port Usage)															
	End Office Switching Function, Per MOU					0.0007025										
	End Office Trunk Port - Shared, Per MOU					0.0001638										
	Tandem Switching (Port Usage) (Local or Access Tandem)															
	Tandem Switching Function Per MOU					0.000095										
	Tandem Trunk Port - Shared, Per MOU					0.0002015										
	Common Transport															
	Common Transport - Per Mile, Per MOU					0.0000023										
	Common Transport - Facilities Termination Per MOU					0.0003224										
UNBUNDLED PORT/LOOP COMBINATIONS - COST BASED RATES																
	Cost Based Rates are applied where BellSouth is required by FCC and/or State Commission rule to provide Unbundled Local Switching or Switch Ports.															
	Features shall apply to the Unbundled Port/Loop Combination - Cost Based Rate section in the same manner as they are applied to the Stand-Alone Unbundled Port section of this Rate Exhibit.															
	End Office and Tandem Switching Usage and Common Transport Usage rates in the Port section of this rate exhibit shall apply to all combinations of loop/port network elements except for UNE Coin Port/Loop Combinations.															
	The first and additional Port nonrecurring charges apply to Not Currently Combined Combos. For Currently Combined Combos the nonrecurring charges shall be those identified in the Nonrecurring - Currently Combined sections.															
	2-WIRE VOICE GRADE LOOP WITH 2-WIRE LINE PORT (RES)															
	UNE Port/Loop Combination Rates															
	2-Wire VG Loop/Port Combo - Zone 1		1			12.70										
	2-Wire VG Loop/Port Combo - Zone 2		2			21.19										
	2-Wire VG Loop/Port Combo - Zone 3		3			34.80										
	UNE Loop Rates															
	2-Wire Voice Grade Loop (SL1) - Zone 1		1	UEPRX	UEPLX	11.55										
	2-Wire Voice Grade Loop (SL1) - Zone 2		2	UEPRX	UEPLX	20.04										
	2-Wire Voice Grade Loop (SL1) - Zone 3		3	UEPRX	UEPLX	33.65										
	2-Wire Voice Grade Line Port Rates (Res)															
	2-Wire voice unbundled port - residence			UEPRX	UEPRL	1.15	40.19	19.83	24.91	6.63		15.66				
	2-Wire voice unbundled port with Caller ID - res			UEPRX	UEPRC	1.15	40.19	19.83	24.91	6.63		15.66				
	2-Wire voice unbundled port outgoing only - res			UEPRX	UEPRO	1.15	40.19	19.83	24.91	6.63		15.66				
	2-Wire voice Grade unbundled Alabama extended local dialing parity port with Caller ID - res			UEPRX	UEPAR	1.15	40.19	19.83	24.91	6.63		15.66				

UNBUNDLED NETWORK ELEMENTS - Alabama														Attachment: 2		Exhibit: B	
CATEGORY		RATE ELEMENTS	Interim	Zone	BCS	USOC	RATES ($)					Svc Order Submitted Elec per LSR	Svc Order Submitted Manually per LSR	Incremental Charge - Manual Svc Order vs. Electronic-1st	Incremental Charge - Manual Svc Order vs. Electronic-Add'l	Incremental Charge - Manual Svc Order vs. Electronic-Disc 1st	Incremental Charge - Manual Svc Order vs. Electronic-Disc Add'l
							Rec	Nonrecurring		Nonrecurring Disconnect		OSS Rates($)					
								First	Add'l	First	Add'l	SOMEC	SOMAN	SOMAN	SOMAN	SOMAN	SOMAN
		2-Wire voice unbundles res, low usage line port with Caller ID (LUM)			UEPRX	UEPAP	1.15	40.19	19.83	24.91	6.63		15.66				
		2-Wire Voice Unbundled Alabama Residence Dialing Plan without Caller ID			UEPRX	UEPWA	1.15	40.19	19.83	24.91	6.63		15.66				
		2-Wire voice unbundled Low Usage Line Port without Caller ID Capability			UEPRX	UEPRT	1.15	40.19	19.83	24.91	6.63		15.66				
	FEATURES																
		All Features Offered			UEPRX	UEPVF	1.98	0.00	0.00				15.66				
	LOCAL NUMBER PORTABILITY																
		Local Number Portability (1 per port)			UEPRX	LNPCX	0.35										
	NONRECURRING CHARGES (NRCs) - CURRENTLY COMBINED																
		2-Wire Voice Grade Loop / Line Port Combination - Conversion - Switch-as-is			UEPRX	USAC2		0.10	0.10				15.66				
		2-Wire Voice Grade Loop / Line Port Combination - Conversion - Switch with change			UEPRX	USACC		0.10	0.10				15.66				
	ADDITIONAL NRCs																
		2-Wire Voice Grade Loop/Line Port Combination - Subsequent Activity			UEPRX	USAS2	0.00	0.00	0.00				15.66				
	2-WIRE VOICE GRADE LOOP WITH 2-WIRE LINE PORT (BUS)																
	UNE Port/Loop Combination Rates																
		2-Wire VG Loop/Port Combo - Zone 1		1			12.70										
		2-Wire VG Loop/Port Combo - Zone 2		2			21.19										
		2-Wire VG Loop/Port Combo - Zone 3		3			34.80										
	UNE Loop Rates																
		2-Wire Voice Grade Loop (SL1) - Zone 1		1	UEPBX	UEPLX	11.55										
		2-Wire Voice Grade Loop (SL1) - Zone 2		2	UEPBX	UEPLX	20.04										
		2-Wire Voice Grade Loop (SL1) - Zone 3		3	UEPBX	UEPLX	33.65										
	2-Wire Voice Grade Line Port (Bus)																
		2-Wire voice unbundled port without Caller ID - bus			UEPBX	UEPBL	1.15	40.19	19.83	24.91	6.63		15.66				
		2-Wire voice unbundled port with Caller + E484 ID - bus			UEPBX	UEPBC	1.15	40.19	19.83	24.91	6.63		15.66				
		2-Wire voice unbundled port outgoing only - bus			UEPBX	UEPBO	1.15	40.19	19.83	24.91	6.63		15.66				
		2-Wire voice Grade unbundled Alabama extended local dialing parity port with Caller ID - bus			UEPBX	UEPAW	1.15	40.19	19.83	24.91	6.63		15.66				
		2-Wire voice unbundled incoming only port with Caller ID - Bus			UEPBX	UEPB1	1.15	40.19	19.83	24.91	6.63		15.66				
		2-Wire Voice Unbundled Alabama Business Dialing Plan without Caller ID			UEPBX	UEPWB	1.15	40.19	19.83	24.91	6.63		15.66				
		2-Wire voice unbundled Incoming Only Port without Caller ID Capability			UEPBX	UEPBE	1.15	40.19	19.83	24.91	6.63		15.66				
	LOCAL NUMBER PORTABILITY																
		Local Number Portability (1 per port)			UEPBX	LNPCX	0.35										
	FEATURES																
		All Features Offered			UEPBX	UEPVF	1.98	0.00	0.00				15.66				
	NONRECURRING CHARGES (NRCs) - CURRENTLY COMBINED																
		2-Wire Voice Grade Loop / Line Port Combination - Conversion - Switch-as-is			UEPBX	USAC2		0.10	0.10				15.66				
		2-Wire Voice Grade Loop / Line Port Combination - Conversion - Switch with change			UEPBX	USACC		0.10	0.10				15.66				
	ADDITIONAL NRCs																
		2-Wire Voice Grade Loop/Line Port Combination - Subsequent Activity			UEPBX	USAS2		0.00	0.00				15.66				
	2-WIRE VOICE GRADE LOOP WITH 2-WIRE LINE PORT (RES - PBX)																
	UNE Port/Loop Combination Rates																
		2-Wire VG Loop/Port Combo - Zone 1		1			12.70										
		2-Wire VG Loop/Port Combo - Zone 2		2			21.19										
		2-Wire VG Loop/Port Combo - Zone 3		3			34.80										
	UNE Loop Rates																
		2-Wire Voice Grade Loop (SL 1) - Zone 1		1	UEPRG	UEPLX	11.55										
		2-Wire Voice Grade Loop (SL 1) - Zone 2		2	UEPRG	UEPLX	20.04										
		2-Wire Voice Grade Loop (SL 1) - Zone 3		3	UEPRG	UEPLX	33.65										

UNBUNDLED NETWORK ELEMENTS - Alabama														Attachment: 2		Exhibit: B	
CATEGORY		RATE ELEMENTS	Interim	Zone	BCS	USOC	RATES ($)					Svc Order Submitted Elec per LSR	Svc Order Submitted Manually per LSR	Incremental Charge - Manual Svc Order vs. Electronic-1st	Incremental Charge - Manual Svc Order vs. Electronic-Add'l	Incremental Charge - Manual Svc Order vs. Electronic-Disc 1st	Incremental Charge - Manual Svc Order vs. Electronic-Disc Add'l
							Rec	Nonrecurring		Nonrecurring Disconnect				OSS Rates($)			
								First	Add'l	First	Add'l	SOMEC	SOMAN	SOMAN	SOMAN	SOMAN	SOMAN
	2-Wire Voice Grade Line Port Rates (RES - PBX)																
		2-Wire VG Unbundled Combination 2-Way PBX Trunk Port - Res			UEPRG	UEPRD	1.15	69.08	32.41	37.43	6.20		15.66				
	LOCAL NUMBER PORTABILITY																
		Local Number Portability (1 per port)			UEPRG	LNPCP	3.15	0.00	0.00				15.66				
	FEATURES																
		All Features Offered			UEPRG	UEPVF	1.98	0.00	0.00				15.66				
	NONRECURRING CHARGES (NRCs) - CURRENTLY COMBINED																
		2-Wire Voice Grade Loop/ Line Port Combination (PBX) - Conversion - Switch-As-Is			UEPRG	USAC2		7.91	1.90				15.66				
		2-Wire Voice Grade Loop/ Line Port Combination (PBX) - Conversion - Switch with Change			UEPRG	USACC		7.81	1.90				15.66				
	ADDITIONAL NRCs																
		2-Wire Voice Grade Loop/ Line Port Combination (PBX) - Subsequent Activity			UEPRG	USAS2	0.00	0.00	0.00				15.66				
		PBX Subsequent Activity - Change/Rearrange Multiline Hunt Group						7.32	7.32				15.66				
	2-WIRE VOICE GRADE LOOP WITH 2-WIRE LINE PORT (BUS - PBX)																
	UNE Port/Loop Combination Rates																
		2-Wire VG Loop/Port Combo - Zone 1		1			12.70										
		2-Wire VG Loop/Port Combo - Zone 2		2			21.19										
		2-Wire VG Loop/Port Combo - Zone 3		3			34.80										
	UNE Loop Rates																
		2-Wire Voice Grade Loop (SL 1) - Zone 1		1	UEPPX	UEPLX	11.55										
		2-Wire Voice Grade Loop (SL 1) - Zone 2		2	UEPPX	UEPLX	20.04										
		2-Wire Voice Grade Loop (SL 1) - Zone 3		3	UEPPX	UEPLX	33.65										
	2-Wire Voice Grade Line Port Rates (BUS - PBX)																
		Line Side Unbundled Combination 2-Way PBX Trunk Port - Bus			UEPPX	UEPPC	1.15	69.08	32.41	37.43	6.20		15.66				
		Line Side Unbundled Outward PBX Trunk Port - Bus			UEPPX	UEPPO	1.15	69.08	32.41	37.43	6.20		15.66				
		Line Side Unbundled Incoming PBX Trunk Port - Bus			UEPPX	UEPP1	1.15	69.08	32.41	37.43	6.20		15.66				
		2-Wire Voice Unbundled 2-Way Combination PBX Alabama Calling Port			UEPPX	UEPA2	1.15	69.08	32.41	37.43	6.20		15.66				
		2-Wire Voice Unbundled PBX LD Terminal Ports			UEPPX	UEPLD	1.15	69.08	32.41	37.43	6.20		15.66				
		2-Wire Voice Unbundled 2-Way Combination PBX Usage Port			UEPPX	UEPXA	1.15	69.08	32.41	37.43	6.20		15.66				
		2-Wire Voice Unbundled PBX Toll Terminal Hotel Ports			UEPPX	UEPXB	1.15	69.08	32.41	37.43	6.20		15.66				
		2-Wire Voice Unbundled PBX LD DDD Terminals Port			UEPPX	UEPXC	1.15	69.08	32.41	37.43	6.20		15.66				
		2-Wire Voice Unbundled PBX LD Terminal Switchboard Port			UEPPX	UEPXD	1.15	69.08	32.41	37.43	6.20		15.66				
		2-Wire Voice Unbundled PBX LD Terminal Switchboard IDD Capable Port			UEPPX	UEPXE	1.15	69.08	32.41	37.43	6.20		15.66				
		2-Wire Voice Unbundled 2-Way PBX Hotel/Hospital Economy Administrative Calling Port			UEPPX	UEPXL	1.15	69.08	32.41	37.43	6.20		15.66				
		2-Wire Voice Unbundled 2-Way PBX Hotel/Hospital Economy Room Calling Port			UEPPX	UEPXM	1.15	69.08	32.41	37.43	6.20		15.66				
		2-Wire Voice Unbundled 1-Way Outgoing PBX Hotel/Hospital Discount Room Calling Port			UEPPX	UEPXO	1.15	69.08	32.41	37.43	6.20		15.66				
		2-Wire Voice Unbundled 1-Way Outgoing PBX Measured Port			UEPPX	UEPXS	1.15	69.08	32.41	37.43	6.20		15.66				
	LOCAL NUMBER PORTABILITY																
		Local Number Portability (1 per port)			UEPPX	LNPCP	3.15	0.00	0.00				15.66				
	FEATURES																
		All Features Offered			UEPPX	UEPVF	1.98	0.00	0.00				15.66				
	NONRECURRING CHARGES (NRCs) - CURRENTLY COMBINED																
		2-Wire Voice Grade Loop/ Line Port Combination (PBX) - Conversion - Switch-As-Is			UEPPX	USAC2		7.91	1.90				15.66				
		2-Wire Voice Grade Loop/ Line Port Combination (PBX) - Conversion - Switch with Change			UEPPX	USACC		7.91	1.90				15.66				
	ADDITIONAL NRCs																
		2-Wire Voice Grade Loop/ Line Port Combination (PBX) - Subsequent Activity			UEPPX	USAS2	0.00	0.00	0.00				15.66				

CATEGORY	RATE ELEMENTS	Interim	Zone	BCS	USOC	RATES ($)					Svc Order Submitted Elec per LSR	Svc Order Submitted Manually per LSR	Attachment: 2 Incremental Charge - Manual Svc Order vs. Electronic-1st	Attachment: 2 Incremental Charge - Manual Svc Order vs. Electronic-Add'l	Exhibit: B Incremental Charge - Manual Svc Order vs. Electronic-Disc 1st	Exhibit: B Incremental Charge - Manual Svc Order vs. Electronic-Disc Add'l
						Rec	Nonrecurring		Nonrecurring Disconnect				OSS Rates($)			
							First	Add'l	First	Add'l	SOMEC	SOMAN	SOMAN	SOMAN	SOMAN	SOMAN
	PBX Subsequent Activity - Change/Rearrange Multiline Hunt Group						7.32	7.32				15.66				
	2-WIRE VOICE GRADE LOOP WITH 2-WIRE ANALOG LINE COIN PORT															
	UNE Port/Loop Combination Rates															
	2-Wire VG Coin Port/Loop Combo – Zone 1		1			12.70										
	2-Wire VG Coin Port/Loop Combo – Zone 2		2			21.19										
	2-Wire VG Coin Port/Loop Combo – Zone 3		3			34.80										
	UNE Loop Rates															
	2-Wire Voice Grade Loop (SL1) - Zone 1		1	UEPCO	UEPLX	11.55										
	2-Wire Voice Grade Loop (SL1) - Zone 2		2	UEPCO	UEPLX	20.04										
	2-Wire Voice Grade Loop (SL1) - Zone 3		3	UEPCO	UEPLX	33.65										
	2-Wire Voice Grade Line Ports (COIN)															
	2-Wire Coin 2-Way without Operator Screening and without Blocking (AL, KY, LA, MS)			UEPCO	UEPRF	1.15	40.19	19.83	24.91	6.63		15.66				
	2-Wire Coin 2-Way with Operator Screening (AL, KY)			UEPCO	UEPRE	1.15	40.19	19.83	24.91	6.63		15.66				
	2-Wire Coin 2-Way with Operator Screening and Blocking: 011, 900/976, 1+DDD (AL, KY, LA, MS)			UEPCO	UEPRA	1.15	40.19	19.83	24.91	6.63		15.66				
	2-Wire Coin 2-Way with Operator Screening and 011 Blocking (AL, LA, MS)			UEPCO	UEPRB	1.15	40.19	19.83	24.91	6.63		15.66				
	2-Wire Coin 2-Way with Operator Screening & Blocking: 900/976, 1+DDD, 011+, & Local (AL, KY, LA, MS)			UEPCO	UEPCD	1.15	40.19	19.83	24.91	6.63		15.66				
	2-Wire Coin Outward with Operator Screening and 011 Blocking (AL, FL)			UEPCO	UEPRK	1.15	40.19	19.83	24.91	6.63		15.66				
	2-Wire Coin Outward with Operator Screening and Blocking: 011, 900/976, 1+DDD (AL, KY, LA, MS)			UEPCO	UEPRH	1.15	40.19	19.83	24.91	6.63		15.66				
	2-Wire Coin Outward Operator Screening & Blocking: 900/976, 1+DDD, 011+, and Local (AL, KY, LA, MS)			UEPCO	UEPCN	1.15	40.19	19.83	24.91	6.63		15.66				
	2-Wire 2-Way Smartline with 900/976 (all states except LA)			UEPCO	UEPCK	1.15	40.19	19.83	24.91	6.63		15.66				
	2-Wire Coin Outward Smartline with 900/976 (all states except LA)			UEPCO	UEPCR	1.15	40.19	19.83	24.91	6.63		15.66				
	ADDITIONAL UNE COIN PORT/LOOP (RC)															
	UNE Coin Port/Loop Combo Usage (Flat Rate)			UEPCO	URECU	1.56	0.00	0.00	0.00	0.00		15.66				
	LOCAL NUMBER PORTABILITY															
	Local Number Portability (1 per port)			UEPCO	LNPCX	0.35										
	NONRECURRING CHARGES - CURRENTLY COMBINED															
	2-Wire Voice Grade Loop / Line Port Combination - Conversion - Switch-as-is			UEPCO	USAC2		0.10	0.10				15.66				
	2-Wire Voice Grade Loop / Line Port Combination - Conversion - Switch with change			UEPCO	USACC		0.10	0.10				15.66				
	ADDITIONAL NRCs															
	2-Wire Voice Grade Loop/Line Port Combination - Subsequent Activity			UEPCO	USAS2		0.00	0.00				15.66				
	2-WIRE VOICE LOOP/ 2WIRE VOICE GRADE IO TRANSPORT/ 2-WIRE LINE PORT (RES)															
	UNE Port/Loop Combination Rates															
	2-Wire VG Loop/IO Tranport/Port Combo - Zone 1		1			15.76										
	2-Wire VG Loop/IO Tranport/Port Combo - Zone 2		2			24.23										
	2-Wire VG Loop/IO Tranport/Port Combo - Zone 3		3			37.52										
	UNE Loop Rates															
	2-Wire Voice Grade Loop (SL2) - Zone 1		1	UEPFR	UECF2	14.38										
	2-Wire Voice Grade Loop (SL2) - Zone 2		2	UEPFR	UECF2	22.85										
	2-Wire Voice Grade Loop (SL2) - Zone 3		3	UEPFR	UECF2	36.14										
	2-Wire Voice Grade Line Port Rates (Res)															
	2-Wire voice unbundled port - residence			UEPFR	UEPRL	1.38	90.38	57.27	48.66	8.77		15.66				
	2-Wire voice unbundled port with Caller ID - res			UEPFR	UEPRC	1.38	90.38	57.27	48.66	8.77		15.66				
	2-Wire voice unbundled port outgoing only - res			UEPFR	UEPRO	1.38	90.38	57.27	48.66	8.77		15.66				
	2-Wire voice Grade unbundled Alabama extended local dialing parity port with Caller ID - res			UEPFR	UEPAR	1.38	90.38	57.27	48.66	8.77		15.66				
	2-Wire voice unbundles res, low usage line port with Caller ID (LUM)			UEPFR	UEPAP	1.38	90.38	57.27	48.66	8.77		15.66				

UNBUNDLED NETWORK ELEMENTS - Alabama														Attachment: 2		Exhibit: B	
CATEGORY	RATE ELEMENTS	Interim	Zone	BCS	USOC	RATES ($)					Svc Order Submitted Elec per LSR	Svc Order Submitted Manually per LSR	Incremental Charge - Manual Svc Order vs. Electronic-1st	Incremental Charge - Manual Svc Order vs. Electronic-Add'l	Incremental Charge - Manual Svc Order vs. Electronic-Disc 1st	Incremental Charge - Manual Svc Order vs. Electronic-Disc Add'l
						Rec	Nonrecurring		Nonrecurring Disconnect		OSS Rates($)					
							First	Add'l	First	Add'l	SOMEC	SOMAN	SOMAN	SOMAN	SOMAN	SOMAN
	2-Wire Voice Unbundled Alabama Residence Dialing Plan without Caller ID			UEPFR	UEPWA	1.38	90.38	57.27	48.66	8.77		15.66				
INTEROFFICE TRANSPORT																
	Interoffice Transport - Dedicated - 2 Wire Voice Grade - Facility Termination			UEPFR	U1TV2	21.13	40.54	27.41	16.74	6.90						
	Interoffice Transport - Dedicated - 2 Wire Voice Grade - Per Mile or Fraction Mile			UEPFR	1L5XX	0.008838										
FEATURES																
	All Features Offered			UEPFR	UEPVF	1.98	0.00	0.00				15.66				
LOCAL NUMBER PORTABILITY																
	Local Number Portability (1 per port)			UEPFR	LNPCX	0.35										
NONRECURRING CHARGES (NRCs) - CURRENTLY COMBINED																
	2-Wire Loop / Dedicated IO Transport / 2 Wire Line Port Combination - Conversion - Switch-as-is			UEPFR	USAC2		8.48	1.87				15.66				
	2-Wire Loop / Dedicated IO Transport / 2 Wire Line Port Combination - Conversion - Switch-With-Change			UEPFR	USACC		8.48	1.87				15.66				
2-WIRE VOICE LOOP/ 2WIRE VOICE GRADE IO TRANSPORT/ 2-WIRE LINE PORT (BUS)																
UNE Port/Loop Combination Rates																
	2-Wire VG Loop/IO Tranport/Port Combo - Zone 1		1			15.76										
	2-Wire VG Loop/IO Tranport/Port Combo - Zone 2		2			24.23										
	2-Wire VG Loop/IO Tranport/Port Combo - Zone 3		3			37.52										
UNE Loop Rates																
	2-Wire Voice Grade Loop (SL2) - Zone 1		1	UEPFB	UECF2	14.38										
	2-Wire Voice Grade Loop (SL2) - Zone 2		2	UEPFB	UECF2	22.85										
	2-Wire Voice Grade Loop (SL2) - Zone 3		3	UEPFB	UECF2	36.14										
2-Wire Voice Grade Line Port (Bus)																
	2-Wire voice unbundled port without Caller ID - bus			UEPFB	UEPBL	1.38	90.38	57.27	48.66	8.77		15.66				
	2-Wire voice unbundled port with Caller + E484 ID - bus			UEPFB	UEPBC	1.38	90.38	57.27	48.66	8.77		15.66				
	2-Wire voice unbundled port outgoing only - bus			UEPFB	UEPBO	1.38	90.38	57.27	48.66	8.77		15.66				
	2-Wire voice Grade unbundled Alabama extended local dialing parity port with Caller ID - bus			UEPFB	UEPAW	1.38	90.38	57.27	48.66	8.77		15.66				
	2-Wire voice unbundled incoming only port with Caller ID - Bus			UEPFB	UEPB1	1.38	90.38	57.27	48.66	8.77		15.66				
	2-Wire Voice Unbundled Alabama Business Dialing Plan without Caller ID			UEPFB	UEPWB	1.38	90.38	57.27	48.66	8.77		15.66				
LOCAL NUMBER PORTABILITY																
	Local Number Portability (1 per port)			UEPFB	LNPCX	0.35										
INTEROFFICE TRANSPORT																
	Interoffice Transport - Dedicated - 2 Wire Voice Grade - Facility Termination			UEPFB	U1TV2	21.13	40.54	27.41	16.74	6.90						
	Interoffice Transport - Dedicated - 2 Wire Voice Grade - Per Mile or Fraction Mile			UEPFB	1L5XX	0.008838										
FEATURES																
	All Features Offered			UEPFB	UEPVF	1.98	0.00	0.00				15.66				
NONRECURRING CHARGES (NRCs) - CURRENTLY COMBINED																
	2-Wire Loop / Dedicated IO Transport / 2 Wire Line Port Combination - Conversion - Switch-as-is			UEPFB	USAC2		8.48	1.87				15.66				
	2-Wire Loop / Dedicated IO Transport / 2 Wire Line Port Combination - Conversion - Switch with change			UEPFB	USACC		8.48	1.87				15.66				
2-WIRE VOICE GRADE LOOP WITH 2-WIRE LINE PORT (BUS - PBX)																
UNE Port/Loop Combination Rates																
	2-Wire VG Loop/IO Tranport/Port Combo - Zone 1		1			15.76										
	2-Wire VG Loop/IO Tranport/Port Combo - Zone 2		2			24.23										
	2-Wire VG Loop/IO Tranport/Port Combo - Zone 3		3			37.52										
UNE Loop Rates																
	2-Wire Voice Grade Loop (SL2) - Zone 1		1	UEPFP	UECF2	14.38										
	2-Wire Voice Grade Loop (SL2) - Zone 2		2	UEPFP	UECF2	22.85										
	2-Wire Voice Grade Loop (SL2) - Zone 3		3	UEPFP	UECF2	36.14										
2-Wire Voice Grade Line Port Rates (BUS - PBX)																

UNBUNDLED NETWORK ELEMENTS - Alabama														Attachment: 2		Exhibit: B	
CATEGORY	RATE ELEMENTS	Interim	Zone	BCS	USOC	RATES ($)					Svc Order Submitted Elec per LSR	Svc Order Submitted Manually per LSR	Incremental Charge - Manual Svc Order vs. Electronic-1st	Incremental Charge - Manual Svc Order vs. Electronic-Add'l	Incremental Charge - Manual Svc Order vs. Electronic-Disc 1st	Incremental Charge - Manual Svc Order vs. Electronic-Disc Add'l
						Rec	Nonrecurring		Nonrecurring Disconnect		OSS Rates($)					
							First	Add'l	First	Add'l	SOMEC	SOMAN	SOMAN	SOMAN	SOMAN	SOMAN
	Line Side Unbundled Combination 2-Way PBX Trunk Port - Bus			UEPFP	UEPPC	1.38	119.27	69.85	61.18	8.34		15.66				
	Line Side Unbundled Outward PBX Trunk Port - Bus			UEPFP	UEPPO	1.38	119.27	69.85	61.18	8.34		15.66				
	Line Side Unbundled Incoming PBX Trunk Port - Bus			UEPFP	UEPP1	1.38	119.27	69.85	61.18	8.34		15.66				
	2-Wire Voice Unbundled 2-Way Combination PBX Alabama Calling Port			UEPFP	UEPA2	1.38	119.27	69.85	61.18	8.34		15.66				
	2-Wire Voice Unbundled PBX LD Terminal Ports			UEPFP	UEPLD	1.38	119.27	69.85	61.18	8.34		15.66				
	2-Wire Voice Unbundled 2-Way Combination PBX Usage Port			UEPFP	UEPXA	1.38	119.27	69.85	61.18	8.34		15.66				
	2-Wire Voice Unbundled PBX Toll Terminal Hotel Ports			UEPFP	UEPXB	1.38	119.27	69.85	61.18	8.34		15.66				
	2-Wire Voice Unbundled PBX LD DDD Terminals Port			UEPFP	UEPXC	1.38	119.27	69.85	61.18	8.34		15.66				
	2-Wire Voice Unbundled PBX LD Terminal Switchboard Port			UEPFP	UEPXD	1.38	119.27	69.85	61.18	8.34		15.66				
	2-Wire Voice Unbundled PBX LD Terminal Switchboard IDD Capable Port			UEPFP	UEPXE	1.38	119.27	69.85	61.18	8.34		15.66				
	2-Wire Voice Unbundled 2-Way PBX Hotel/Hospital Economy Administrative Calling Port			UEPFP	UEPXL	1.38	119.27	69.85	61.18	8.34		15.66				
	2-Wire Voice Unbundled 2-Way PBX Hotel/Hospital Economy Room Calling Port			UEPFP	UEPXM	1.38	119.27	69.85	61.18	8.34		15.66				
	2-Wire Voice Unbundled 1-Way Outgoing PBX Hotel/Hospital Discount Room Calling Port			UEPFP	UEPXO	1.38	119.27	69.85	61.18	8.34		15.66				
	2-Wire Voice Unbundled 1-Way Outgoing PBX Measured Port			UEPFP	UEPXS	1.38	119.27	69.85	61.18	8.34		15.66				
LOCAL NUMBER PORTABILITY																
	Local Number Portability (1 per port)			UEPFP	LNPCP	3.15	0.00	0.00				15.66				
INTEROFFICE TRANSPORT																
	Interoffice Transport - Dedicated - 2 Wire Voice Grade - Facility Termination			UEPFP	U1TV2	21.13	40.54	27.41	16.74	6.90						
	Interoffice Transport - Dedicated - 2 Wire Voice Grade - Per Mile or Fraction Mile			UEPFP	1L5XX	0.008838										
FEATURES																
	All Features Offered			UEPFP	UEPVF	1.98	0.00	0.00				15.66				
NONRECURRING CHARGES (NRCs) - CURRENTLY COMBINED																
	2-Wire Loop / Dedicated IO Transport / 2 Wire Line Port Combination - Conversion - Switch-as-is			UEPFP	USAC2		8.48	1.87				15.66				
	2-Wire Loop / Dedicated IO Transport / 2 Wire Line Port Combination - Conversion - Switch with change			UEPFP	USACC		8.48	1.87				15.66				
UNBUNDLED PORT/LOOP COMBINATIONS - COST BASED RATES																
2-WIRE VOICE GRADE LOOP- BUS ONLY - WITH 2-WIRE DID TRUNK PORT																
UNE Port/Loop Combination Rates																
	2-Wire VG Loop/2-Wire DID Trunk Port Combo - UNE Zone 1		1			22.40										
	2-Wire VG Loop/2-Wire DID Trunk Port Combo - UNE Zone 2		2			30.88										
	2-Wire VG Loop/2-Wire DID Trunk Port Combo - UNE Zone 3		3			44.17										
UNE Loop Rates																
	2-Wire Analog Voice Grade Loop - (SL2) - UNE Zone 1		1	UEPPX	UECD1	14.38										
	2-Wire Analog Voice Grade Loop - (SL2) - UNE Zone 2		2	UEPPX	UECD1	22.85										
	2-Wire Analog Voice Grade Loop - (SL2) - UNE Zone 3		3	UEPPX	UECD1	36.14										
UNE Port Rate																
	Exchange Ports - 2-Wire DID Port			UEPPX	UEPD1	8.02	207.31	73.74	107.14	11.20		15.66				
NONRECURRING CHARGES - CURRENTLY COMBINED																
	2-Wire Voice Grade Loop / 2-Wire DID Trunk Port Combination - Switch-as-is			UEPPX	USAC1		7.31	1.87								
	2-Wire Voice Grade Loop / 2-Wire DID Trunk Port Conversion with BellSouth Allowable Changes			UEPPX	USA1C		7.31	1.87								
ADDITIONAL NRCs																
	2-Wire DID Subsequent Activity - Add Trunks, Per Trunk			UEPPX	USAS1		26.78	26.78								
Telephone Number/Trunk Group Establisment Charges																
	DID Trunk Termination (One Per Port)			UEPPX	NDT	0.00	0.00	0.00								
	Additional DID Numbers for each Group of 20 DID Numbers			UEPPX	ND4	0.00	0.00	0.00								
	DID Numbers, Non- consecutive DID Numbers , Per Number			UEPPX	ND5	0.00	0.00	0.00								
	Reserve Non-Consecutive DID numbers			UEPPX	ND6	0.00	0.00	0.00								
	Reserve DID Numbers			UEPPX	NDV	0.00	0.00	0.00								

UNBUNDLED NETWORK ELEMENTS - Alabama

CATEGORY	RATE ELEMENTS	Interim	Zone	BCS	USOC	RATES ($) Rec	Nonrecurring First	Nonrecurring Add'l	Nonrecurring Disconnect First	Nonrecurring Disconnect Add'l	Svc Order Submitted Elec per LSR	Svc Order Submitted Manually per LSR	Attachment: 2 Incremental Charge - Manual Svc Order vs. Electronic-1st	Attachment: 2 Incremental Charge - Manual Svc Order vs. Electronic-Add'l	Exhibit: B Incremental Charge - Manual Svc Order vs. Electronic-Disc 1st	Exhibit: B Incremental Charge - Manual Svc Order vs. Electronic-Disc Add'l
											OSS Rates($)					
											SOMEC	SOMAN	SOMAN	SOMAN	SOMAN	SOMAN
LOCAL NUMBER PORTABILITY																
	Local Number Portability (1 per port)			UEPPX	LNPCP	3.15	0.00	0.00								
2-WIRE ISDN DIGITAL GRADE LOOP WITH 2-WIRE ISDN DIGITAL LINE SIDE PORT																
UNE Port/Loop Combination Rates																
	2W ISDN Digital Grade Loop/2W ISDN Digital Line Side Port - UNE Zone 1		1	UEPPB UEPPR		27.28										
	2W ISDN Digital Grade Loop/2W ISDN Digital Line Side Port - UNE Zone 2		2	UEPPB UEPPR		37.86										
	2W ISDN Digital Grade Loop/2W ISDN Digital Line Side Port - UNE Zone 3		3	UEPPB UEPPR		53.84										
UNE Loop Rates																
	2-Wire ISDN Digital Grade Loop - UNE Zone 1		1	UEPPB UEPPR	USL2X	19.03										
	2-Wire ISDN Digital Grade Loop - UNE Zone 2		2	UEPPB UEPPR	USL2X	29.62										
	2-Wire ISDN Digital Grade Loop - UNE Zone 3		3	UEPPB UEPPR	USL2X	45.60										
UNE Port Rate																
	Exchange Port - 2-Wire ISDN Line Side Port			UEPPB UEPPR	UEPPB	8.24	190.01	132.76	100.67	21.28		15.66				
NONRECURRING CHARGES - CURRENTLY COMBINED																
	2-Wire ISDN Digital Grade Loop / 2-Wire ISDN Line Side Port Combination - Conversion			UEPPB UEPPR	USACB	0.00	38.51	27.02				15.66				
ADDITIONAL NRCs																
LOCAL NUMBER PORTABILITY																
	Local Number Portability (1 per port)			UEPPB UEPPR	LNPCX	0.35	0.00	0.00								
B-CHANNEL USER PROFILE ACCESS:																
	CVS/CSD (DMS/5ESS)			UEPPB UEPPR	U1UCA	0.00	0.00	0.00								
	CVS (EWSD)			UEPPB UEPPR	U1UCB	0.00	0.00	0.00								
	CSD			UEPPB UEPPR	U1UCC	0.00	0.00	0.00								
B-CHANNEL AREA PLUS USER PROFILE ACCESS: (AL,KY,LA,MS SC,MS, & TN)																
	CVS/CSD (DMS/5ESS)			UEPPB UEPPR	U1UCD	0.00	0.00	0.00								
	CVS (EWSD)			UEPPB UEPPR	U1UCE	0.00	0.00	0.00								
	CSD			UEPPB UEPPR	U1UCF	0.00	0.00	0.00								
USER TERMINAL PROFILE																
	User Terminal Profile (EWSD only)			UEPPB UEPPR	U1UMA	0.00	0.00	0.00								
VERTICAL FEATURES																
	All Vertical Features - One per Channel B User Profile			UEPPB UEPPR	UEPVF	1.98	0.00	0.00								
INTEROFFICE CHANNEL MILEAGE																
	Interoffice Channel mileage each, including first mile and facilities termination			UEPPB UEPPR	M1GNC	21.14	40.54	27.41	16.74	6.90						
	Interoffice Channel mileage each, additional mile			UEPPB UEPPR	M1GNM	0.008838	0.00	0.00				0.00				
4-WIRE DS1 DIGITAL LOOP WITH 4-WIRE ISDN DS1 DIGITAL TRUNK PORT																
UNE Port/Loop Combination Rates																
	4W DS1 Digital Loop/4W ISDN DS1 Digital Trunk Port - UNE Zone 1		1	UEPPP		166.87										
	4W DS1 Digital Loop/4W ISDN DS1 Digital Trunk Port - UNE Zone 2		2	UEPPP		238.50										
	4W DS1 Digital Loop/4W ISDN DS1 Digital Trunk Port - UNE Zone 3		3	UEPPP		398.85										
UNE Loop Rates																
	4-Wire DS1 Digital Loop - UNE Zone 1		1	UEPPP	USL4P	82.55										
	4-Wire DS1 Digital Loop - UNE Zone 2		2	UEPPP	USL4P	154.18										
	4-Wire DS1 Digital Loop - UNE Zone 3		3	UEPPP	USL4P	314.52										
UNE Port Rate																
	Exchange Ports - 4-Wire ISDN DS1 Port			UEPPP	UEPPP	84.32	456.28	259.10	123.88	31.77		15.66				
NONRECURRING CHARGES - CURRENTLY COMBINED																
	4-Wire DS1 Digital Loop / 4-Wire ISDN DS1 Digital Trunk Port Combination - Conversion -Switch-as-is			UEPPP	USACP	0.00	119.07	78.56				15.66				
ADDITIONAL NRCs																
	4-Wire DS1 Loop/4-W ISDN Digtl Trk Port - Subsqt Actvy-Inward/two way Tel Nos. (except NC)			UEPPP	PR7TF		0.49									

UNBUNDLED NETWORK ELEMENTS - Alabama													Attachment: 2		Exhibit: B	
CATEGORY	RATE ELEMENTS	Interim	Zone	BCS	USOC	RATES ($)					Svc Order Submitted Elec per LSR	Svc Order Submitted Manually per LSR	Incremental Charge - Manual Svc Order vs. Electronic-1st	Incremental Charge - Manual Svc Order vs. Electronic-Add'l	Incremental Charge - Manual Svc Order vs. Electronic-Disc 1st	Incremental Charge - Manual Svc Order vs. Electronic-Disc Add'l
						Rec	Nonrecurring		Nonrecurring Disconnect		OSS Rates($)					
							First	Add'l	First	Add'l	SOMEC	SOMAN	SOMAN	SOMAN	SOMAN	SOMAN
	4-Wire DS1 Loop / 4-Wire ISDN DS1 Digital Trunk Port - Outward Tel Numbers (All States except NC)			UEPPP	PR7TO		11.51									
	4-Wire DS1 Loop / 4-Wire ISDN DS1 Digital Trk Port - Subsequent Inward Tel Numbers			UEPPP	PR7ZT		23.02									
LOCAL NUMBER PORTABILITY																
	Local Number Portability (1 per port)			UEPPP	LNPCN	1.75										
INTERFACE (Provsioning Only)																
	Voice/Data			UEPPP	PR71V	0.00	0.00	0.00								
	Digital Data			UEPPP	PR71D	0.00	0.00	0.00								
	Inward Data			UEPPP	PR71E	0.00	0.00	0.00								
New or Additional "B" Channel																
	New or Additional - Voice/Data B Channel			UEPPP	PR7BV	0.00	14.53									
	New or Additional - Digital Data B Channel			UEPPP	PR7BF	0.00	14.53									
	New or Additional Inward Data B Channel			UEPPP	PR7BD	0.00	14.53									
CALL TYPES																
	Inward			UEPPP	PR7C1	0.00	0.00	0.00								
	Outward			UEPPP	PR7CO	0.00	0.00	0.00								
	Two-way			UEPPP	PR7CC	0.00	0.00	0.00								
Interoffice Channel Mileage																
	Fixed Each Including First Mile			UEPPP	1LN1A	60.34	89.27	81.81	16.35	14.44		15.66				
	Each Airline-Fractional Additional Mile			UEPPP	1LN1B	0.18										
4-WIRE DS1 DIGITAL LOOP WITH 4-WIRE DDITS TRUNK PORT																
UNE Port/Loop Combination Rates																
	4W DS1 Digital Loop/4W DDITS Trunk Port - UNE Zone 1		1	UEPDC		142.64										
	4W DS1 Digital Loop/4W DDITS Trunk Port - UNE Zone 2		2	UEPDC		214.26										
	4W DS1 Digital Loop/4W DDITS Trunk Port - UNE Zone 3		3	UEPDC		374.61										
UNE Loop Rates																
	4-Wire DS1 Digital Loop - UNE Zone 1		1	UEPDC	USLDC	82.55										
	4-Wire DS1 Digital Loop - UNE Zone 2		2	UEPDC	USLDC	154.18										
	4-Wire DS1 Digital Loop - UNE Zone 3		3	UEPDC	USLDC	314.52										
UNE Port Rate																
	4-Wire DDITS Digital Trunk Port			UEPDC	UDD1T	60.09	454.49	253.23	117.29	14.17		15.66				
NONRECURRING CHARGES - CURRENTLY COMBINED																
	4-Wire DS1 Digital Loop / 4-Wire DDITS Trunk Port Combination - Switch-as-is			UEPDC	USAC4		129.49	67.02				15.66				
	4-Wire DS1 Digital Loop / 4-Wire DDITS Trunk Port Combination - Conversion with DS1 Changes			UEPDC	USAWA		129.49	67.02				15.66				
	4-Wire DS1 Digital Loop / 4-Wire DDITS Trunk Port Combination - Conversion with Change - Trunk			UEPDC	USAWB		129.49	67.02				15.66				
ADDITIONAL NRCs																
	4-Wire DS1 Loop / 4-Wire DDITS Trunk Port - NRC - Subsequent Channel Activation/Chan - 2-Way Trunk			UEPDC	UDTTA		14.48	14.48				15.66				
	4-Wire DS1 Loop / 4-Wire DDITS Trunk Port - Subsequent Channel Activation/Chan - 1-Way Outward Trunk			UEPDC	UDTTB		14.48	14.48				15.66				
	4-Wire DS1 Loop / 4-Wire DDITS Trunk Port - Subsqnt Channel Activation/Chan Inward Trunk w/out DID			UEPDC	UDTTC		14.48	14.48				15.66				
	4-Wire DS1 Loop / 4-Wire DDITS Trunk Port - Subsqnt Chan Activation Per Chan - Inward Trunk with DID			UEPDC	UDTTD		14.48	14.48				15.66				
	4-Wire DS1 Loop / 4-Wire DDITS Trunk Port - Subsqnt Chan Activation / Chan - 2-Way DID w User Trans			UEPDC	UDTTE		14.48	14.48				15.66				
BIPOLAR 8 ZERO SUBSTITUTION																
	B8ZS -Superframe Format			UEPDC	CCOSF		0.00	600.00								
	B8ZS - Extended Superframe Format			UEPDC	CCOEF		0.00	600.00								
Alternate Mark Inversion																
	AMI -Superframe Format			UEPDC	MCOSF		0.00	0.00								
	AMI - Extended SuperFrame Format			UEPDC	MCOPO		0.00	0.00								
Telephone Number/Trunk Group Establisment Charges																
	Telephone Number for 2-Way Trunk Group			UEPDC	UDTGX	0.00										
	Telephone Number for 1-Way Outward Trunk Group			UEPDC	UDTGY	0.00										

CATEGORY	RATE ELEMENTS	Interim	Zone	BCS	USOC	RATES ($)					Svc Order Submitted Elec per LSR	Svc Order Submitted Manually per LSR	Attachment: 2 Incremental Charge - Manual Svc Order vs. Electronic-1st	Attachment: 2 Incremental Charge - Manual Svc Order vs. Electronic-Add'l	Exhibit: B Incremental Charge - Manual Svc Order vs. Electronic-Disc 1st	Exhibit: B Incremental Charge - Manual Svc Order vs. Electronic-Disc Add'l
						Rec	Nonrecurring		Nonrecurring Disconnect		OSS Rates($)					
							First	Add'l	First	Add'l	SOMEC	SOMAN	SOMAN	SOMAN	SOMAN	SOMAN
	Telephone Number for 1-Way Inward Trunk Group Without DID			UEPDC	UDTGZ	0.00										
	DID Numbers for each Group of 20 DID Numbers			UEPDC	ND4	0.00	0.00									
	DID Numbers, Non- consecutive DID Numbers , Per Number			UEPDC	ND5	0.00										
	Reserve Non-Consecutive DID Nos.			UEPDC	ND6	0.00	0.00	0.00								
	Reserve DID Numbers			UEPDC	NDV	0.00	0.00	0.00								
	Dedicated DS1 (Interoffice Channel Mileage) - FX/FCO for 4-Wire DS1 Digital Loop with 4-Wire DDITS Trunk Port															
	Interoffice Channel Mileage - Fixed rate 0-8 miles (Facilities Termination)			UEPDC	1LNO1	60.16	89.27	81.81	16.35	14.44		15.66				
	Interoffice Channel Mileage - Additional rate per mile - 0-8 miles			UEPDC	1LNOA	0.18	0.00	0.00								
	Interoffice Channel Mileage - Fixed rate 9-25 miles (Facilities Termination)			UEPDC	1LNO2	0.00	0.00	0.00								
	Interoffice Channel Mileage - Additional rate per mile - 9-25 miles			UEPDC	1LNOB	0.18	0.00	0.00								
	Interoffice Channel Mileage - Fixed rate 25+ miles (Facilities Termination)			UEPDC	1LNO3	0.00	0.00	0.00	0.00							
	Interoffice Channel Mileage - Additional rate per mile - 25+ miles			UEPDC	1LNOC	0.18	0.00	0.00								
	Local Number Portability, per DS0 Activated			UEPDC	LNPCP	3.15	0.00	0.00	0.00							
	Central Office Termininating Point			UEPDC	CTG	0.00										
	4-WIRE DS1 LOOP WITH CHANNELIZATION WITH PORT															
	System is 1 DS1 Loop, 1 D4 Channel Bank, and up to 24 Feature Activations															
	Each System can have up to 24 combinations of rates depending on type and number of ports used															
	UNE DS1 Loop															
	4-Wire DS1 Loop - UNE Zone 1		1	UEPMG	USLDC	82.55	0.00	0.00								
	4-Wire DS1 Loop - UNE Zone 2		2	UEPMG	USLDC	154.18	0.00	0.00								
	4-Wire DS1 Loop - UNE Zone 3		3	UEPMG	USLDC	314.52	0.00	0.00								
	UNE DSO Channelization Capacities (D4 Channel Bank Configurations)															
	24 DSO Channel Capacity - 1 per DS1			UEPMG	VUM24	101.40	0.00	0.00								
	48 DSO Channel Capacity - 1 per 2 DS1s			UEPMG	VUM48	202.80	0.00	0.00								
	96 DSO Channel Capacity -1per 4 DS1s			UEPMG	VUM96	405.60	0.00	0.00								
	144 DS0 Channel Capacity - 1 per 6 DS1s			UEPMG	VUM14	608.40	0.00	0.00								
	192 DS0 Channel Capacity -1 per 8 DS1s			UEPMG	VUM19	811.20	0.00	0.00								
	240 DS0 Channel Capacity - 1 per 10 DS1s			UEPMG	VUM2O	1,014.00	0.00	0.00								
	288 DS0 Channel Capacity - 1 per 12 DS1s			UEPMG	VUM28	1,216.80	0.00	0.00								
	384 DS0 Channel Capacity - 1 per 16 DS1s			UEPMG	VUM38	1,622.40	0.00	0.00								
	480 DS0 Channel Capacity - 1 per 20 DS1s			UEPMG	VUM4O	2,028.00	0.00	0.00								
	576 DS0 Channel Capacity -1 per 24 DS1s			UEPMG	VUM57	2,433.60	0.00	0.00								
	672 DS0 Channel Capacity - 1 per 28 DS1s			UEPMG	VUM67	2,839.20	0.00	0.00								
	Non-Recurring Charges (NRC) Associated with 4-Wire DS1 Loop with Channeliztion with Port - Conversion Charge Based on a System															
	A Minimum System configuration is One (1) DS1, One (1) D4 Channel Bank, and Up To 24 DSO Ports with Feature Activations.															
	Multiples of this configuration functioning as one are considered Add'l after the minimum system configuration is counted.															
	NRC - Conversion (Currently Combined) with or without BellSouth Allowed Changes			UEPMG	USAC4	0.00	150.48	8.36				15.66				
	System Additions at End User Locations Where 4-Wire DS1 Loop with Channelization with Port Combination Currently Exists and															
	New (Not Currently Combined) in all states, except in Density Zone 1 of Top 8 MSA's															
	1 DS1/D4 Channel Bank - Additionally Add NRC for each Port and Assoc Fea Activation			UEPMG	VUMD4	0.00	716.11	468.04	148.75	17.65		15.66				
	Bipolar 8 Zero Substitution															
	Clear Channel Capability Format, superframe - Subsequent Activity Only			UEPMG	CCOSF	0.00	0.00	600.00								
	Clear Channel Capability Format - Extended Superframe - Subsequent Activity Only			UEPMG	CCOEF	0.00	0.00	600.00								
	Alternate Mark Inversion (AMI)															
	Superframe Format			UEPMG	MCOSF	0.00	0.00	0.00								
	Extended Superframe Format			UEPMG	MCOPO	0.00	0.00	0.00								
	Exchange Ports Associated with 4-Wire DS1 Loop with Channelization with Port															
	Exchange Ports															

UNBUNDLED NETWORK ELEMENTS - Alabama														Attachment: 2		Exhibit: B	
CATEGORY	RATE ELEMENTS	Interim	Zone	BCS	USOC	RATES ($)					Svc Order Submitted Elec per LSR	Svc Order Submitted Manually per LSR	Incremental Charge - Manual Svc Order vs. Electronic-1st	Incremental Charge - Manual Svc Order vs. Electronic-Add'l	Incremental Charge - Manual Svc Order vs. Electronic-Disc 1st	Incremental Charge - Manual Svc Order vs. Electronic-Disc Add'l
						Rec	Nonrecurring		Nonrecurring Disconnect		OSS Rates($)					
							First	Add'l	First	Add'l	SOMEC	SOMAN	SOMAN	SOMAN	SOMAN	SOMAN
	Line Side Combination Channelized PBX Trunk Port - Business			UEPPX	UEPCX	1.15	0.00	0.00	0.00	0.00		15.66				
	Line Side Outward Channelized PBX Trunk Port - Business			UEPPX	UEPOX	1.15	0.00	0.00	0.00	0.00		15.66				
	Line Side Inward Only Channelized PBX Trunk Port without DID			UEPPX	UEP1X	1.15	0.00	0.00	0.00	0.00		15.66				
	2-Wire Trunk Side Unbundled Channelized DID Trunk Port			UEPPX	UEPDM	8.05	0.00	0.00	0.00	0.00		15.66				
	Unbundled Exchange Ports, 2-Wire Channelized – Outdial – (AL, KY, LA, MS, & TN)(Conversion from Network Access Service)			UEPPX	UEPCY	1.15						15.66				
	Unbundled Exchange Ports, 2-Wire Channelized – Combination (AL, KY, LA, MS, & TN) (Conversion from Network Access Service)			UEPPX	UEPCT	1.15						15.66				
	2-Wire Channelized PBX Area Calling Service Combination Port (AL Only)			UEPPX	UEPA4	1.15	0.00	0.00				15.66				
	2 Wire Channelized PBX Area Calling Service Outgoing Only Port (AL Only)			UEPPX	UEPA3	1.15	0.00	0.00				15.66				
Feature Activations - Unbundled Loop Concentration																
	Feature (Service) Activation for each Line Port Terminated in D4 Bank			UEPPX	1PQWM	0.56	54.55					15.66				
	Feature (Service) Activation for each Trunk Port Terminated in D4 Bank			UEPPX	1PQWU	0.56	77.03					15.66				
Telephone Number/ Group Establishment Charges for DID Service																
	DID Trunk Termination (1 per Port)			UEPPX	NDT	0.00	0.00	0.00								
	DID Numbers - groups of 20 - Valid all States			UEPPX	ND4	0.00	0.00	0.00								
	Non-Consecutive DID Numbers - per number			UEPPX	ND5	0.00	0.00	0.00								
	Reserve Non-Consecutive DID Numbers			UEPPX	ND6	0.00	0.00	0.00								
	Reserve DID Numbers			UEPPX	NDV	0.00	0.00	0.00								
Local Number Portability																
	Local Number Portability - 1 per port			UEPPX	LNPCP	3.15	0.00	0.00								
FEATURES - Vertical and Optional																
Local Switching Features Offered with Line Side Ports Only																
	All Features Available			UEPPX	UEPVF	1.98	0.00	0.00								
UNBUNDLED CENTREX PORT/LOOP COMBINATIONS - COST BASED RATES																
1. Cost Based Rates are applied where BellSouth is required by FCC and/or State Commission rule to provide Unbundled Local Switching or Switch Ports.																
2. Features shall apply to the Unbundled Port/Loop Combination - Cost Based Rate section in the same manner as they are applied to the Stand-Alone Unbundled Port section of this Rate Exhibit.																
3. End Office and Tandem Switching Usage and Common Transport Usage rates in the Port section of this rate exhibit shall apply to all combinations of loop/port network elements except for UNE Coin Port/Loop Combinations.																
4. The first and additional Port nonrecurring charges apply to Not Currently Combined Combos. For Currently Combined Combos, the nonrecurring charges shall be those identified in the Nonrecurring - Currently Combined sections. Additional NRCs may apply also and are categorized accordingly.																
5. Market Rates for Unbundled Centrex Port/Loop Combination will be negotiated on an Individual Case Basis, until further notice.																
UNE-P CENTREX - 1AESS - (Valid in AL,FL,GA,KY,LA,MS,&TN only)																
2-Wire VG Loop/2-Wire Voice Grade Port (Centrex) Combo																
UNE Port/Loop Combination Rates (Non-Design)																
	2-Wire VG Loop/2-Wire Voice Grade Port (Centrex) Port Combo - Non-Design		1	UEP91		12.70										
	2-Wire VG Loop/2-Wire Voice Grade Port (Centrex)Port Combo - Non-Design		2	UEP91		21.19										
	2-Wire VG Loop/2-Wire Voice Grade Port (Centrex)Port Combo - Non-Design		3	UEP91		34.80										
UNE Port/Loop Combination Rates (Design)																
	2-Wire VG Loop/2-Wire Voice Grade Port (Centrex) Port Combo - Design		1	UEP91		15.53										
	2-Wire VG Loop/2-Wire Voice Grade Port (Centrex)Port Combo - Design		2	UEP91		24.00										
	2-Wire VG Loop/2-Wire Voice Grade Port (Centrex)Port Combo - Design		3	UEP91		37.29										
UNE Loop Rate																
	2-Wire Voice Grade Loop (SL 1) - Zone 1		1	UEP91	UECS1	11.55										
	2-Wire Voice Grade Loop (SL 1) - Zone 2		2	UEP91	UECS1	20.04										
	2-Wire Voice Grade Loop (SL 1) - Zone 3		3	UEP91	UECS1	33.65										

UNBUNDLED NETWORK ELEMENTS - Alabama

CATEGORY	RATE ELEMENTS	Interim	Zone	BCS	USOC	RATES ($) Rec	Nonrecurring First	Nonrecurring Add'l	Nonrecurring Disconnect First	Nonrecurring Disconnect Add'l	Svc Order Submitted Elec per LSR SOMEC	Svc Order Submitted Manually per LSR SOMAN	Attachment: 2 Incremental Charge - Manual Svc Order vs. Electronic-1st SOMAN	Attachment: 2 Incremental Charge - Manual Svc Order vs. Electronic-Add'l SOMAN	Exhibit: B Incremental Charge - Manual Svc Order vs. Electronic-Disc 1st SOMAN	Exhibit: B Incremental Charge - Manual Svc Order vs. Electronic-Disc Add'l SOMAN
							OSS Rates($)									
	2-Wire Voice Grade Loop (SL 2) - Zone 1		1	UEP91	UECS2	14.38										
	2-Wire Voice Grade Loop (SL 2) - Zone 2		2	UEP91	UECS2	22.85										
	2-Wire Voice Grade Loop (SL 2) - Zone 3		3	UEP91	UECS2	36.14										
UNE Ports																
All States (Except North Carolina and Sout Carolina)																
	2-Wire Voice Grade Port (Centrex) Basic Local Area			UEP91	UEPYA	1.15	40.19	19.83	24.91	6.63		15.66				
	2-Wire Voice Grade Port (Centrex 800 termination)Basic Local Area			UEP91	UEPYB	1.15	40.19	19.83	24.91	6.63		15.66				
	2-Wire Voice Grade Port (Centrex with Caller ID)1Basic Local Area			UEP91	UEPYH	1.15	40.19	19.83	24.91	6.63		15.66				
	2-Wire Voice Grade Port (Centrex from diff Serving Wire Center)2 Basic Local Area			UEP91	UEPYM	1.15	90.38	57.27	48.66	8.77		15.66				
	2-Wire Voice Grade Port, Diff Serving Wire Center - 800 Service Term - Basic Local Area			UEP91	UEPYZ	1.15	90.38	57.27	48.66	8.77		15.66				
	2-Wire Voice Grade Port terminated in on Megalink or equivalent - Basic Local Area			UEP91	UEPY9	1.15	40.19	19.83	24.91	6.63		15.66				
	2-Wire Voice Grade Port Terminated on 800 Service Term - Basic Local Area			UEP91	UEPY2	1.15	40.19	19.83	24.91	6.63		15.66				
AL, KY, LA, MS, & TN Only																
	2-Wire Voice Grade Port (Centrex)			UEP91	UEPQA	1.15	40.19	19.83	24.91	6.63		15.66				
	2-Wire Voice Grade Port (Centrex 800 termination)			UEP91	UEPQB	1.15	40.19	19.83	24.91	6.63		15.66				
	2-Wire Voice Grade Port (Centrex with Caller ID)1			UEP91	UEPQH	1.15	40.19	19.83	24.91	6.63		15.66				
	2-Wire Voice Grade Port (Centrex from diff Serving Wire Center)2			UEP91	UEPQM	1.15	90.38	57.27	48.66	8.77		15.66				
	2-Wire Voice Grade Port, Diff Serving Wire Center - 800 Service Term			UEP91	UEPQZ	1.15	90.38	57.27	48.66	8.77		15.66				
	2-Wire Voice Grade Port terminated in on Megalink or equivalent			UEP91	UEPQ9	1.15	40.19	19.83	24.91	6.63		15.66				
	2-Wire Voice Grade Port Terminated on 800 Service Term			UEP91	UEPQ2	1.15	40.19	19.83	24.91	6.63		15.66				
Local Switching																
	Centrex Intercom Funtionality, per port			UEP91	URECS	0.5488										
Local Number Portability																
	Local Number Portability (1 per port)			UEP91	LNPCC	0.35										
Features																
	All Standard Features Offered, per port			UEP91	UEPVF	1.98										
	All Select Features Offered, per port			UEP91	UEPVS	0.00	405.52									
	All Centrex Control Features Offered, per port			UEP91	UEPVC	1.98										
NARS																
	Unbundled Network Access Register - Combination			UEP91	UARCX	0.00	0.00	0.00								
	Unbundled Network Access Register - Indial			UEP91	UAR1X	0.00	0.00	0.00								
	Unbundled Network Access Register - Outdial			UEP91	UAROX	0.00	0.00	0.00								
Miscellaneous Terminations																
2-Wire Trunk Side																
	Trunk Side Terminations, each			UEP91	CENA6	8.05	119.31	18.74	59.90	3.76		15.66				
Interoffice Channel Mileage - 2-Wire																
	Interoffice Channel Facilities Termination - Voice Grade			UEP91	M1GBC	21.13	40.54	27.41	16.74	6.90		15.66				
	Interoffice Channel mileage, per mile or fraction of mile			UEP91	M1GBM	0.008838										
Feature Activations (DS0) Centrex Loops on Channelized DS1 Service																
D4 Channel Bank Feature Activations																
	Feature Activation on D-4 Channel Bank Centrex Loop Slot			UEP91	1PQWS	0.56										
	Feature Activation on D-4 Channel Bank FX line Side Loop Slot			UEP91	1PQW6	0.56										
	Feature Activation on D-4 Channel Bank FX Trunk Side Loop Slot			UEP91	1PQW7	0.56										
	Feature Activation on D-4 Channel Bank Centrex Loop Slot - Different Wire Center			UEP91	1PQWP	0.56										
	Feature Activation on D-4 Channel Bank Private Line Loop Slot			UEP91	1PQWV	0.56										

CATEGORY	RATE ELEMENTS	Interim	Zone	BCS	USOC	RATES ($)					Svc Order Submitted Elec per LSR	Svc Order Submitted Manually per LSR	Attachment: 2 Incremental Charge - Manual Svc Order vs. Electronic-1st	Attachment: 2 Incremental Charge - Manual Svc Order vs. Electronic-Add'l	Exhibit: B Incremental Charge - Manual Svc Order vs. Electronic-Disc 1st	Exhibit: B Incremental Charge - Manual Svc Order vs. Electronic-Disc Add'l
						Rec	Nonrecurring		Nonrecurring Disconnect		OSS Rates($)					
							First	Add'l	First	Add'l	SOMEC	SOMAN	SOMAN	SOMAN	SOMAN	SOMAN
	Feature Activation on D-4 Channel Bank Tjie Line/Trunk Loop Slot			UEP91	1PQWQ	0.56										
	Feature Activation on D-4 Channel Bank WATS Loop Slot			UEP91	1PQWA	0.56										
Non-Recurring Charges (NRC) Associated with UNE-P Centrex																
	Conversion - Currently Combined Switch-As-Is with allowed changes, per port			UEP91	USAC2		0.10	0.10				15.66				
	Conversion of Existing Centrex Common Block			UEP91	USACN		37.75	16.58				15.66				
	New Centrex Standard Common Block			UEP91	M1ACS	0.00	667.21					15.66				
	New Centrex Customized Common Block			UEP91	M1ACC	0.00	667.21					15.66				
	Secondary Block, per Block			UEP91	M2CC1	0.00	78.02					15.66				
	NAR Establishment Charge, Per Occasion			UEP91	URECA	0.00	72.73					15.66				
UNE-P CENTREX - 5ESS (Valid in All States)																
2-Wire VG Loop/2-Wire Voice Grade Port (Centrex) Combo																
UNE Port/Loop Combination Rates (Non-Design)																
	2-Wire VG Loop/2-Wire Voice Grade Port (Centrex) Port Combo - Non-Design		1	UEP95		12.70										
	2-Wire VG Loop/2-Wire Voice Grade Port (Centrex)Port Combo - Non-Design		2	UEP95		21.19										
	2-Wire VG Loop/2-Wire Voice Grade Port (Centrex)Port Combo - Non-Design		3	UEP95		34.80										
UNE Port/Loop Combination Rates (Design)																
	2-Wire VG Loop/2-Wire Voice Grade Port (Centrex) Port Combo - Design		1	UEP95		15.53										
	2-Wire VG Loop/2-Wire Voice Grade Port (Centrex)Port Combo - Design		2	UEP95		24.00										
	2-Wire VG Loop/2-Wire Voice Grade Port (Centrex)Port Combo - Design		3	UEP95		37.29										
UNE Loop Rate																
	2-Wire Voice Grade Loop (SL 1) - Zone 1		1	UEP95	UECS1	11.55										
	2-Wire Voice Grade Loop (SL 1) - Zone 2		2	UEP95	UECS1	20.04										
	2-Wire Voice Grade Loop (SL 1) - Zone 3		3	UEP95	UECS1	33.65										
	2-Wire Voice Grade Loop (SL 2) - Zone 1		1	UEP95	UECS2	14.38										
	2-Wire Voice Grade Loop (SL 2) - Zone 2		2	UEP95	UECS2	22.85										
	2-Wire Voice Grade Loop (SL 2) - Zone 3		3	UEP95	UECS2	36.14										
UNE Port Rate																
All States																
	2-Wire Voice Grade Port (Centrex) Basic Local Area			UEP95	UEPYA	1.15	40.19	19.83	24.91	6.63		15.66				
	2-Wire Voice Grade Port (Centrex 800 termination)			UEP95	UEPYB	1.15	40.19	19.83	24.91	6.63		15.66				
	2-Wire Voice Grade Port (Centrex with Caller ID)1Basic Local Area			UEP95	UEPYH	1.15	40.19	19.83	24.91	6.63		15.66				
	2-Wire Voice Grade Port (Centrex from diff Serving Wire Center)2 Basic Local Area			UEP95	UEPYM	1.15	90.38	57.27	48.66	8.77		15.66				
	2-Wire Voice Grade Port, Diff Serving Wire Center - 800 Service Term - Basic Local Area			UEP95	UEPYZ	1.15	90.38	57.27	48.66	8.77		15.66				
	2-Wire Voice Grade Port terminated in on Megalink or equivalent - Basic Local Area			UEP95	UEPY9	1.15	40.19	19.83	24.91	6.63		15.66				
	2-Wire Voice Grade Port Terminated on 800 Service Term - Basic Local Area			UEP95	UEPY2	1.15	40.19	19.83	24.91	6.63		15.66				
AL, KY, LA, MS, SC, & TN Only																
	2-Wire Voice Grade Port (Centrex)			UEP95	UEPQA	1.15	40.19	19.83	24.91	6.63		15.66				
	2-Wire Voice Grade Port (Centrex 800 termination)			UEP95	UEPQB	1.15	40.19	19.83	24.91	6.63		15.66				
	2-Wire Voice Grade Port (Centrex with Caller ID)1			UEP95	UEPQH	1.15	40.19	19.83	24.91	6.63		15.66				
	2-Wire Voice Grade Port (Centrex from diff Serving Wire Center)2			UEP95	UEPQM	1.15	90.38	57.27	48.66	8.77		15.66				
	2-Wire Voice Grade Port, Diff Serving Wire Center - 800 Service Term			UEP95	UEPQZ	1.15	90.38	57.27	48.66	8.77		15.66				
	2-Wire Voice Grade Port terminated in on Megalink or equivalent			UEP95	UEPQ9	1.15	40.19	19.83	24.91	6.63		15.66				
	2-Wire Voice Grade Port Terminated on 800 Service Term			UEP95	UEPQ2	1.15	40.19	19.83	24.91	6.63		15.66				

UNBUNDLED NETWORK ELEMENTS - Alabama													Attachment: 2		Exhibit: B	
CATEGORY	RATE ELEMENTS	Interim	Zone	BCS	USOC	RATES ($)					Svc Order Submitted Elec per LSR	Svc Order Submitted Manually per LSR	Incremental Charge - Manual Svc Order vs. Electronic-1st	Incremental Charge - Manual Svc Order vs. Electronic-Add'l	Incremental Charge - Manual Svc Order vs. Electronic-Disc 1st	Incremental Charge - Manual Svc Order vs. Electronic-Disc Add'l
						Rec	Nonrecurring		Nonrecurring Disconnect		OSS Rates($)					
							First	Add'l	First	Add'l	SOMEC	SOMAN	SOMAN	SOMAN	SOMAN	SOMAN
Local Switching																
	Centrex Intercom Funtionality, per port			UEP95	URECS	0.5488										
Local Number Portability																
	Local Number Portability (1 per port)			UEP95	LNPCC	0.35										
Features																
	All Standard Features Offered, per port			UEP95	UEPVF	1.98										
	All Select Features Offered, per port			UEP95	UEPVS	0.00	405.52									
	All Centrex Control Features Offered, per port			UEP95	UEPVC	1.98										
NARS																
	Unbundled Network Access Register - Combination			UEP95	UARCX	0.00	0.00	0.00								
	Unbundled Network Access Register - Indial			UEP95	UAR1X	0.00	0.00	0.00								
	Unbundled Network Access Register - Outdial			UEP95	UAROX	0.00	0.00	0.00								
Miscellaneous Terminations																
2-Wire Trunk Side																
	Trunk Side Terminations, each			UEP95	CEND6	8.05	119.31	18.74	59.90	3.76		15.66				
4-Wire Digital (1.544 Megabits)																
	DS1 Circuit Terminations, each			UEP95	M1HD1	60.09	202.02	95.69	72.59	2.46		15.66				
	DS0 Channels Activated, each			UEP95	M1HDO	0.00	14.46					15.66				
Interoffice Channel Mileage - 2-Wire																
	Interoffice Channel Facilities Termination			UEP95	M1GBC	21.13	40.54	27.41	16.74	6.90		15.66				
	Interoffice Channel mileage, per mile or fraction of mile			UEP95	M1GBM	0.008838										
Feature Activations (DS0) Centrex Loops on Channelized DS1 Service																
D4 Channel Bank Feature Activations																
	Feature Activation on D-4 Channel Bank Centrex Loop Slot			UEP95	1PQWS	0.56										
	Feature Activation on D-4 Channel Bank FX line Side Loop Slot			UEP95	1PQW6	0.56										
	Feature Activation on D-4 Channel Bank FX Trunk Side Loop Slot			UEP95	1PQW7	0.56										
	Feature Activation on D-4 Channel Bank Centrex Loop Slot - Different Wire Center			UEP95	1PQWP	0.56										
	Feature Activation on D-4 Channel Bank Private Line Loop Slot			UEP95	1PQWV	0.56										
	Feature Activation on D-4 Channel Bank Tjie Line/Trunk Loop Slot			UEP95	1PQWQ	0.56										
	Feature Activation on D-4 Channel Bank WATS Loop Slot			UEP95	1PQWA	0.56										
Non-Recurring Charges (NRC) Associated with UNE-P Centrex																
	NRC Conversion Currently Combined Switch-As-Is with allowed changes, per port			UEP95	USAC2		0.10	0.10				15.66				
	Conversion of Existing Centrex Common Block, each			UEP95	USACN		37.75	16.58				15.66				
	New Centrex Standard Common Block			UEP95	M1ACS	0.00	667.21					15.66				
	New Centrex Customized Common Block			UEP95	M1ACC	0.00	667.21					15.66				
	NAR Establishment Charge, Per Occasion			UEP95	URECA	0.00	72.73					15.66				
UNE-P CENTREX - DMS100 (Valid in All States)																
2-Wire VG Loop/2-Wire Voice Grade Port (Centrex) Combo																
UNE Port/Loop Combination Rates (Non-Design)																
	2-Wire VG Loop/2-Wire Voice Grade Port (Centrex) Port Combo - Non-Design		1	UEP9D		12.70										
	2-Wire VG Loop/2-Wire Voice Grade Port (Centrex)Port Combo - Non-Design		2	UEP9D		21.19										
	2-Wire VG Loop/2-Wire Voice Grade Port (Centrex)Port Combo - Non-Design		3	UEP9D		34.80										
UNE Port/Loop Combination Rates (Design)																
	2-Wire VG Loop/2-Wire Voice Grade Port (Centrex) Port Combo - Design		1	UEP9D		15.53										
	2-Wire VG Loop/2-Wire Voice Grade Port (Centrex)Port Combo - Design		2	UEP9D		24.00										
	2-Wire VG Loop/2-Wire Voice Grade Port (Centrex)Port Combo - Design		3	UEP9D		37.29										
UNE Loop Rate																

UNBUNDLED NETWORK ELEMENTS - Alabama														Attachment: 2		Exhibit: B	
CATEGORY		RATE ELEMENTS	Interim	Zone	BCS	USOC	RATES ($)					Svc Order Submitted Elec per LSR	Svc Order Submitted Manually per LSR	Incremental Charge - Manual Svc Order vs. Electronic-1st	Incremental Charge - Manual Svc Order vs. Electronic-Add'l	Incremental Charge - Manual Svc Order vs. Electronic-Disc 1st	Incremental Charge - Manual Svc Order vs. Electronic-Disc Add'l
							Rec	Nonrecurring		Nonrecurring Disconnect		OSS Rates($)					
								First	Add'l	First	Add'l	SOMEC	SOMAN	SOMAN	SOMAN	SOMAN	SOMAN
		2-Wire Voice Grade Loop (SL 1) - Zone 1		1	UEP9D	UECS1	11.55										
		2-Wire Voice Grade Loop (SL 1) - Zone 2		2	UEP9D	UECS1	20.04										
		2-Wire Voice Grade Loop (SL 1) - Zone 3		3	UEP9D	UECS1	33.65										
		2-Wire Voice Grade Loop (SL 2) - Zone 1		1	UEP9D	UECS2	14.38										
		2-Wire Voice Grade Loop (SL 2) - Zone 2		2	UEP9D	UECS2	22.85										
		2-Wire Voice Grade Loop (SL 2) - Zone 3		3	UEP9D	UECS2	36.14										
	UNE Port Rate																
	ALL STATES																
		2-Wire Voice Grade Port (Centrex) Basic Local Area			UEP9D	UEPYA	1.15	40.19	19.83	24.91	6.63		15.66				
		2-Wire Voice Grade Port (Centrex 800 termination)Basic Local Area			UEP9D	UEPYB	1.15	40.19	19.83	24.91	6.63		15.66				
		2-Wire Voice Grade Port (Centrex / EBS-PSET)3Basic Local Area			UEP9D	UEPYC	1.15	40.19	19.83	24.91	6.63		15.66				
		2-Wire Voice Grade Port (Centrex / EBS-M5009)3Basic Local Area			UEP9D	UEPYD	1.15	40.19	19.83	24.91	6.63		15.66				
		2-Wire Voice Grade Port (Centrex / EBS-M5209))3 Basic Local Area			UEP9D	UEPYE	1.15	40.19	19.83	24.91	6.63		15.66				
		2-Wire Voice Grade Port (Centrex / EBS-M5112))3 Basic Local Area			UEP9D	UEPYF	1.15	40.19	19.83	24.91	6.63		15.66				
		2-Wire Voice Grade Port (Centrex / EBS-M5312))3Basic Local Area			UEP9D	UEPYG	1.15	40.19	19.83	24.91	6.63		15.66				
		2-Wire Voice Grade Port (Centrex / EBS-M5008))3 Basic Local Area			UEP9D	UEPYT	1.15	40.19	19.83	24.91	6.63		15.66				
		2-Wire Voice Grade Port (Centrex / EBS-M5208))3 Basic Local Area			UEP9D	UEPYU	1.15	40.19	19.83	24.91	6.63		15.66				
		2-Wire Voice Grade Port (Centrex / EBS-M5216))3 Basic Local Area			UEP9D	UEPYV	1.15	40.19	19.83	24.91	6.63		15.66				
		2-Wire Voice Grade Port (Centrex / EBS-M5316))3 Basic Local Area			UEP9D	UEPY3	1.15	40.19	19.83	24.91	6.63		15.66				
		2-Wire Voice Grade Port (Centrex with Caller ID) Basic Local Area			UEP9D	UEPYH	1.15	40.19	19.83	24.91	6.63		15.66				
		2-Wire Voice Grade Port (Centrex/Caller ID/Msg Wtg Lamp Indication))3 Basic Local Area			UEP9D	UEPYW	1.15	40.19	19.83	24.91	6.63		15.66				
		2-Wire Voice Grade Port (Centrex/Msg Wtg Lamp Indication))3 Basic Local Area			UEP9D	UEPYJ	1.15	40.19	19.83	24.91	6.63		15.66				
		2-Wire Voice Grade Port (Centrex from diff Serving Wire Center) 2 Basic Local Area			UEP9D	UEPYM	1.15	90.38	57.27	48.66	8.77		15.66				
		2-Wire Voice Grade Port (Centrex/differ SWC /EBS-PSET)2, 3 Basic Local Area			UEP9D	UEPYO	1.15	90.38	57.27	48.66	8.77		15.66				
		2-Wire Voice Grade Port (Centrex/differ SWC /EBS-M5009)2, 3 Basic Local Area			UEP9D	UEPYP	1.15	90.38	57.27	48.66	8.77		15.66				
		2-Wire Voice Grade Port (Centrex/differ SWC /EBS-5209)2, 3 Basic Local Area			UEP9D	UEPYQ	1.15	90.38	57.27	48.66	8.77		15.66				
		2-Wire Voice Grade Port (Centrex/differ SWC /EBS-M5112)2, 3 Basic Local Area			UEP9D	UEPYR	1.15	90.38	57.27	48.66	8.77		15.66				
		2-Wire Voice Grade Port (Centrex/differ SWC /EBS-M5312)2, 3 Basic Local Area			UEP9D	UEPYS	1.15	90.38	57.27	48.66	8.77		15.66				
		2-Wire Voice Grade Port (Centrex/differ SWC /EBS-M5008)2, 3 Basic Local Area			UEP9D	UEPY4	1.15	90.38	57.27	48.66	8.77		15.66				
		2-Wire Voice Grade Port (Centrex/differ SWC /EBS-M5208)2, 3 Basic Local Area			UEP9D	UEPY5	1.15	90.38	57.27	48.66	8.77		15.66				
		2-Wire Voice Grade Port (Centrex/differ SWC /EBS-M5216)2, 3 Basic Local Area			UEP9D	UEPY6	1.15	90.38	57.27	48.66	8.77		15.66				
		2-Wire Voice Grade Port (Centrex/differ SWC /EBS-M5316)2, 3 Basic Local Area			UEP9D	UEPY7	1.15	90.38	57.27	48.66	8.77		15.66				
		2-Wire Voice Grade Port, Diff Serving Wire Center - 800 Service Term			UEP9D	UEPYZ	1.15	90.38	57.27	48.66	8.77		15.66				
		2-Wire Voice Grade Port terminated in on Megalink or equivalent Basic Local Area			UEP9D	UEPY9	1.15	40.19	19.83	24.91	6.63		15.66				

CATEGORY	RATE ELEMENTS	Interim	Zone	BCS	USOC	RATES ($)					Svc Order Submitted Elec per LSR	Svc Order Submitted Manually per LSR	Attachment: 2		Exhibit: B	
													Incremental Charge - Manual Svc Order vs. Electronic-1st	Incremental Charge - Manual Svc Order vs. Electronic-Add'l	Incremental Charge - Manual Svc Order vs. Electronic-Disc 1st	Incremental Charge - Manual Svc Order vs. Electronic-Disc Add'l
						Rec	Nonrecurring		Nonrecurring Disconnect				OSS Rates($)			
							First	Add'l	First	Add'l	SOMEC	SOMAN	SOMAN	SOMAN	SOMAN	SOMAN
	2-Wire Voice Grade Port Terminated on 800 Service Term Basic Local Area			UEP9D	UEPY2	1.15	40.19	19.83	24.91	6.63		15.66				
AL, KY, LA, MS, SC, & TN Only																
	2-Wire Voice Grade Port (Centrex)			UEP9D	UEPQA	1.15	40.19	19.83	24.91	6.63		15.66				
	2-Wire Voice Grade Port (Centrex 800 termination)			UEP9D	UEPQB	1.15	40.19	19.83	24.91	6.63		15.66				
	2-Wire Voice Grade Port (Centrex / EBS-PSET)3			UEP9D	UEPQC	1.15	40.19	19.83	24.91	6.63		15.66				
	2-Wire Voice Grade Port (Centrex / EBS-M5009)3			UEP9D	UEPQD	1.15	40.19	19.83	24.91	6.63		15.66				
	2-Wire Voice Grade Port (Centrex / EBS-M5209)3			UEP9D	UEPQE	1.15	40.19	19.83	24.91	6.63		15.66				
	2-Wire Voice Grade Port (Centrex / EBS-M5112)3			UEP9D	UEPQF	1.15	40.19	19.83	24.91	6.63		15.66				
	2-Wire Voice Grade Port (Centrex / EBS-M5312)3			UEP9D	UEPQG	1.15	40.19	19.83	24.91	6.63		15.66				
	2-Wire Voice Grade Port (Centrex / EBS-M5008)3			UEP9D	UEPQT	1.15	40.19	19.83	24.91	6.63		15.66				
	2-Wire Voice Grade Port (Centrex / EBS-M5208)3			UEP9D	UEPQU	1.15	40.19	19.83	24.91	6.63		15.66				
	2-Wire Voice Grade Port (Centrex / EBS-M5216)3			UEP9D	UEPQV	1.15	40.19	19.83	24.91	6.63		15.66				
	2-Wire Voice Grade Port (Centrex / EBS-M5316)3			UEP9D	UEPQ3	1.15	40.19	19.83	24.91	6.63		15.66				
	2-Wire Voice Grade Port (Centrex with Caller ID)			UEP9D	UEPQH	1.15	40.19	19.83	24.91	6.63		15.66				
	2-Wire Voice Grade Port (Centrex/Caller ID/Msg Wtg Lamp Indication)3			UEP9D	UEPQW	1.15	40.19	19.83	24.91	6.63		15.66				
	2-Wire Voice Grade Port (Centrex/Msg Wtg Lamp Indication)3			UEP9D	UEPQJ	1.15	40.19	19.83	24.91	6.63		15.66				
	2-Wire Voice Grade Port (Centrex from diff Serving Wire Center) 2			UEP9D	UEPQM	1.15	90.38	57.27	48.66	8.77		15.66				
	2-Wire Voice Grade Port (Centrex/differ SWC /EBS-PSET)2, 3			UEP9D	UEPQO	1.15	90.38	57.27	48.66	8.77		15.66				
	2-Wire Voice Grade Port (Centrex/differ SWC /EBS-M5009)2, 3			UEP9D	UEPQP	1.15	90.38	57.27	48.66	8.77		15.66				
	2-Wire Voice Grade Port (Centrex/differ SWC /EBS-5209)2, 3			UEP9D	UEPQQ	1.15	90.38	57.27	48.66	8.77		15.66				
	2-Wire Voice Grade Port (Centrex/differ SWC /EBS-M5112)2, 3			UEP9D	UEPQR	1.15	90.38	57.27	48.66	8.77		15.66				
	2-Wire Voice Grade Port (Centrex/differ SWC /EBS-M5312)2, 3			UEP9D	UEPQS	1.15	90.38	57.27	48.66	8.77		15.66				
	2-Wire Voice Grade Port (Centrex/differ SWC /EBS-M5008)2, 3			UEP9D	UEPQ4	1.15	90.38	57.27	48.66	8.77		15.66				
	2-Wire Voice Grade Port (Centrex/differ SWC /EBS-M5208)2, 3			UEP9D	UEPQ5	1.15	90.38	57.27	48.66	8.77		15.66				
	2-Wire Voice Grade Port (Centrex/differ SWC /EBS-M5216)2, 3			UEP9D	UEPQ6	1.15	90.38	57.27	48.66	8.77		15.66				
	2-Wire Voice Grade Port (Centrex/differ SWC /EBS-M5316)2, 3			UEP9D	UEPQ7	1.15	90.38	57.27	48.66	8.77		15.66				
	2-Wire Voice Grade Port, Diff Serving Wire Center - 800 Service Term			UEP9D	UEPQZ	1.15	90.38	57.27	48.66	8.77		15.66				
	2-Wire Voice Grade Port terminated in on Megalink or equivalent			UEP9D	UEPQ9	1.15	40.19	19.83	24.91	6.63		15.66				
	2-Wire Voice Grade Port Terminated on 800 Service Term			UEP9D	UEPQ2	1.15	40.19	19.83	24.91	6.63		15.66				
Local Switching																
	Centrex Intercom Funtionality, per port			UEP9D	URECS	0.5488										
Local Number Portability																
	Local Number Portability (1 per port)			UEP9D	LNPCC	0.35										
Features																
	All Standard Features Offered, per port			UEP9D	UEPVF	1.98										
	All Select Features Offered, per port			UEP9D	UEPVS	0.00	405.52									
	All Centrex Control Features Offered, per port			UEP9D	UEPVC	1.98										
NARS																
	Unbundled Network Access Register - Combination			UEP9D	UARCX	0.00	0.00	0.00								
	Unbundled Network Access Register - Inward			UEP9D	UAR1X	0.00	0.00	0.00								
	Unbundled Network Access Register - Outdial			UEP9D	UAROX	0.00	0.00	0.00								
Miscellaneous Terminations																
2-Wire Trunk Side																
	Trunk Side Terminations, each			UEP9D	CEND6	8.05	119.31	18.74	59.90	3.76		15.66				
4-Wire Digital (1.544 Megabits)																
	DS1 Circuit Terminations, each			UEP9D	M1HD1	60.09	202.02	95.69	72.59	2.46		15.66				
	DS0 Channels Activiated per Channel			UEP9D	M1HDO	0.00	14.46					15.66				

UNBUNDLED NETWORK ELEMENTS - Alabama														Attachment: 2		Exhibit: B	
CATEGORY		RATE ELEMENTS	Interim	Zone	BCS	USOC	RATES ($)					Svc Order Submitted Elec per LSR	Svc Order Submitted Manually per LSR	Incremental Charge - Manual Svc Order vs. Electronic-1st	Incremental Charge - Manual Svc Order vs. Electronic-Add'l	Incremental Charge - Manual Svc Order vs. Electronic-Disc 1st	Incremental Charge - Manual Svc Order vs. Electronic-Disc Add'l
							Rec	Nonrecurring		Nonrecurring Disconnect		OSS Rates($)					
								First	Add'l	First	Add'l	SOMEC	SOMAN	SOMAN	SOMAN	SOMAN	SOMAN
	Interoffice Channel Mileage - 2-Wire																
		Interoffice Channel Facilities Termination			UEP9D	M1GBC	21.13	40.54	27.41	16.74	6.90		15.66				
		Interoffice Channel mileage, per mile or fraction of mile			UEP9D	M1GBM	0.008838										
	Feature Activations (DS0) Centrex Loops on Channelized DS1 Service																
	D4 Channel Bank Feature Activations																
		Feature Activation on D-4 Channel Bank Centrex Loop Slot			UEP9D	1PQWS	0.56										
		Feature Activation on D-4 Channel Bank FX line Side Loop Slot			UEP9D	1PQW6	0.56										
		Feature Activation on D-4 Channel Bank FX Trunk Side Loop Slot			UEP9D	1PQW7	0.56										
		Feature Activation on D-4 Channel Bank Centrex Loop Slot - Different Wire Center			UEP9D	1PQWP	0.56										
		Feature Activation on D-4 Channel Bank Private Line Loop Slot			UEP9D	1PQWV	0.56										
		Feature Activation on D-4 Channel Bank Tjie Line/Trunk Loop Slot			UEP9D	1PQWQ	0.56										
		Feature Activation on D-4 Channel Bank WATS Loop Slot			UEP9D	1PQWA	0.56										
	Non-Recurring Charges (NRC) Associated with UNE-P Centrex																
		NRC Conversion Currently Combined Switch-As-Is with allowed changes, per port			UEP9D	USAC2		0.10	0.10				15.66				
		Conversion of existing Centrex Common Block, each			UEP9D	USACN		37.75	16.58				15.66				
		New Centrex Standard Common Block			UEP9D	M1ACS	0.00	667.21					15.66				
		New Centrex Customized Common Block			UEP9D	M1ACC	0.00	667.21					15.66				
		NAR Establishment Charge, Per Occasion			UEP9D	URECA	0.00	72.73					15.66				
	UNE-P CENTREX - EWSD (Valid in AL, FL, KY, LA, MS & TN)																
	2-Wire VG Loop/2-Wire Voice Grade Port (Centrex) Combo																
	UNE Port/Loop Combination Rates (Non-Design)																
		2-Wire VG Loop/2-Wire Voice Grade Port (Centrex) Port Combo - Non-Design		1	UEP9E		12.70										
		2-Wire VG Loop/2-Wire Voice Grade Port (Centrex)Port Combo - Non-Design		2	UEP9E		21.19										
		2-Wire VG Loop/2-Wire Voice Grade Port (Centrex)Port Combo - Non-Design		3	UEP9E		34.80										
	UNE Port/Loop Combination Rates (Design)																
		2-Wire VG Loop/2-Wire Voice Grade Port (Centrex) Port Combo - Design		1	UEP9E		15.53										
		2-Wire VG Loop/2-Wire Voice Grade Port (Centrex)Port Combo - Design		2	UEP9E		24.00										
		2-Wire VG Loop/2-Wire Voice Grade Port (Centrex)Port Combo - Design		3	UEP9E		37.29										
	UNE Loop Rate																
		2-Wire Voice Grade Loop (SL 1) - Zone 1		1	UEP9E	UECS1	11.55										
		2-Wire Voice Grade Loop (SL 1) - Zone 2		2	UEP9E	UECS1	20.04										
		2-Wire Voice Grade Loop (SL 1) - Zone 3		3	UEP9E	UECS1	33.65										
		2-Wire Voice Grade Loop (SL 2) - Zone 1		1	UEP9E	UECS2	14.38										
		2-Wire Voice Grade Loop (SL 2) - Zone 2		2	UEP9E	UECS2	22.85										
		2-Wire Voice Grade Loop (SL 2) - Zone 3		3	UEP9E	UECS2	36.14										
	UNE Port Rate																
	AL, FL, KY, LA, MS, & TN only																
		2-Wire Voice Grade Port (Centrex) Basic Local Area			UEP9E	UEPYA	1.15	40.19	19.83	24.91	6.63		15.66				
		2-Wire Voice Grade Port (Centrex 800 termination)Basic Local Area			UEP9E	UEPYB	1.15	40.19	19.83	24.91	6.63		15.66				
		2-Wire Voice Grade Port (Centrex with Caller ID)1Basic Local Area			UEP9E	UEPYH	1.15	40.19	19.83	24.91	6.63		15.66				
		2-Wire Voice Grade Port (Centrex from diff Serving Wire Center)2 Basic Local Area			UEP9E	UEPYM	1.15	90.38	57.27	48.66	8.77		15.66				
		2-Wire Voice Grade Port, Diff Serving Wire Center - 800 Service Term - Basic Local Area			UEP9E	UEPYZ	1.15	90.38	57.27	48.66	8.77		15.66				

UNBUNDLED NETWORK ELEMENTS - Alabama

CATEGORY	RATE ELEMENTS	Interim	Zone	BCS	USOC	RATES ($) Rec	Nonrecurring First	Nonrecurring Add'l	Nonrecurring Disconnect First	Nonrecurring Disconnect Add'l	Svc Order Submitted Elec per LSR	Svc Order Submitted Manually per LSR	Attachment: 2 Incremental Charge - Manual Svc Order vs. Electronic-1st	Attachment: 2 Incremental Charge - Manual Svc Order vs. Electronic-Add'l	Exhibit: B Incremental Charge - Manual Svc Order vs. Electronic-Disc 1st	Exhibit: B Incremental Charge - Manual Svc Order vs. Electronic-Disc Add'l
											OSS Rates($)					
											SOMEC	SOMAN	SOMAN	SOMAN	SOMAN	SOMAN
	2-Wire Voice Grade Port terminated in on Megalink or equivalent - Basic Local Area			UEP9E	UEPY9	1.15	40.19	19.83	24.91	6.63		15.66				
	2-Wire Voice Grade Port Terminated on 800 Service Term - Basic Local Area			UEP9E	UEPY2	1.15	40.19	19.83	24.91	6.63		15.66				
AL, KY, LA, MS, & TN Only																
	2-Wire Voice Grade Port (Centrex)			UEP9E	UEPQA	1.15	40.19	19.83	24.91	6.63		15.66				
	2-Wire Voice Grade Port (Centrex 800 termination)			UEP9E	UEPQB	1.15	40.19	19.83	24.91	6.63		15.66				
	2-Wire Voice Grade Port (Centrex with Caller ID)1			UEP9E	UEPQH	1.15	40.19	19.83	24.91	6.63		15.66				
	2-Wire Voice Grade Port (Centrex from diff Serving Wire Center)2			UEP9E	UEPQM	1.15	90.38	57.27	48.66	8.77		15.66				
	2-Wire Voice Grade Port, Diff Serving Wire Center - 800 Service Term			UEP9E	UEPQZ	1.15	90.38	57.27	48.66	8.77		15.66				
	2-Wire Voice Grade Port terminated in on Megalink or equivalent			UEP9E	UEPQ9	1.15	40.19	19.83	24.91	6.63		15.66				
	2-Wire Voice Grade Port Terminated on 800 Service Term			UEP9E	UEPQ2	1.15	40.19	19.83	24.91	6.63		15.66				
Local Switching																
	Centrex Intercom Funtionality, per port			UEP9E	URECS	0.5488										
Local Number Portability																
	Local Number Portability (1 per port)			UEP9E	LNPCC	0.35										
Features																
	All Standard Features Offered, per port			UEP9E	UEPVF	1.98										
	All Select Features Offered, per port			UEP9E	UEPVS	0.00	405.52									
	All Centrex Control Features Offered, per port			UEP9E	UEPVC	1.98										
NARS																
	Unbundled Network Access Register - Combination			UEP9E	UARCX	0.00	0.00	0.00								
	Unbundled Network Access Register - Indial			UEP9E	UAR1X	0.00	0.00	0.00								
	Unbundled Network Access Register - Outdial			UEP9E	UAROX	0.00	0.00	0.00								
Miscellaneous Terminations																
2-Wire Trunk Side																
	Trunk Side Terminations, each			UEP9E	CEND6	8.05	119.31	18.74	59.90	3.76		15.66				
4-Wire Digital (1.544 Megabits)																
	DS1 Circuit Terminations, each			UEP9E	M1HD1	60.09	202.02	95.69	72.59	2.46		15.66				
	DS0 Channel Activated Per Channel			UEP9E	M1HDO	0.00	14.46					15.66				
Interoffice Channel Mileage - 2-Wire																
	Interoffice Channel Facilities Termination			UEP9E	M1GBC	21.13	40.54	27.41	16.74	6.90		15.66				
	Interoffice Channel mileage, per mile or fraction of mile			UEP9E	M1GBM	0.008838										
Feature Activations (DS0) Centrex Loops on Channelized DS1 Service																
D4 Channel Bank Feature Activations																
	Feature Activation on D-4 Channel Bank Centrex Loop Slot			UEP9E	1PQWS	0.56										
	Feature Activation on D-4 Channel Bank FX line Side Loop Slot			UEP9E	1PQW6	0.56										
	Feature Activation on D-4 Channel Bank FX Trunk Side Loop Slot			UEP9E	1PQW7	0.56										
	Feature Activation on D-4 Channel Bank Centrex Loop Slot - Different Wire Center			UEP9E	1PQWP	0.56										
	Feature Activation on D-4 Channel Bank Private Line Loop Slot			UEP9E	1PQWV	0.56										
	Feature Activation on D-4 Channel Bank Tjie Line/Trunk Loop Slot			UEP9E	1PQWQ	0.56										
	Feature Activation on D-4 Channel Bank WATS Loop Slot			UEP9E	1PQWA	0.56										
Non-Recurring Charges (NRC) Associated with UNE-P Centrex																
	NRC Conversion Currently Combined Switch-As-Is with allowed changes, per port			UEP9E	USAC2		0.10	0.10				15.66				
	Conversion of Existing Centrex Common Block, each			UEP9E	USACN		37.75	16.58				15.66				
	New Centrex Standard Common Block			UEP9E	M1ACS	0.00	667.21					15.66				
	New Centrex Customized Common Block			UEP9E	M1ACC	0.00	667.21					15.66				
	NAR Establishment Charge, Per Occasion			UEP9E	URECA	0.00	72.73					15.66				
UNE-P CENTREX - DCO - Valid in AL, KY, LA, MS, & TN)																
2-Wire VG Loop/2-Wire Voice Grade Port (Centrex) Combo																

UNBUNDLED NETWORK ELEMENTS - Alabama													Attachment: 2		Exhibit: B	
CATEGORY	RATE ELEMENTS	Interim	Zone	BCS	USOC	RATES ($)					Svc Order Submitted Elec per LSR	Svc Order Submitted Manually per LSR	Incremental Charge - Manual Svc Order vs. Electronic-1st	Incremental Charge - Manual Svc Order vs. Electronic-Add'l	Incremental Charge - Manual Svc Order vs. Electronic-Disc 1st	Incremental Charge - Manual Svc Order vs. Electronic-Disc Add'l
						Rec	Nonrecurring		Nonrecurring Disconnect		OSS Rates($)					
							First	Add'l	First	Add'l	SOMEC	SOMAN	SOMAN	SOMAN	SOMAN	SOMAN
UNE Port/Loop Combination Rates (Non-Design)																
	2-Wire VG Loop/2-Wire Voice Grade Port (Centrex) Port Combo - Non-Design		1	UEP93		12.70										
	2-Wire VG Loop/2-Wire Voice Grade Port (Centrex)Port Combo - Non-Design		2	UEP93		21.19										
	2-Wire VG Loop/2-Wire Voice Grade Port (Centrex)Port Combo - Non-Design		3	UEP93		34.80										
UNE Port/Loop Combination Rates (Design)																
	2-Wire VG Loop/2-Wire Voice Grade Port (Centrex) Port Combo - Design		1	UEP93		15.53										
	2-Wire VG Loop/2-Wire Voice Grade Port (Centrex)Port Combo - Design		2	UEP93		24.00										
	2-Wire VG Loop/2-Wire Voice Grade Port (Centrex)Port Combo - Design		3	UEP93		37.29										
UNE Loop Rate																
	2-Wire Voice Grade Loop (SL 1) - Zone 1		1	UEP93	UECS1	11.55										
	2-Wire Voice Grade Loop (SL 1) - Zone 2		2	UEP93	UECS1	20.04										
	2-Wire Voice Grade Loop (SL 1) - Zone 3		3	UEP93	UECS1	33.65										
	2-Wire Voice Grade Loop (SL 2) - Zone 1		1	UEP93	UECS2	14.38										
	2-Wire Voice Grade Loop (SL 2) - Zone 2		2	UEP93	UECS2	22.85										
	2-Wire Voice Grade Loop (SL 2) - Zone 3		3	UEP93	UECS2	36.14										
UNE Port Rate																
AL, KY, LA, MS, & TN only																
	2-Wire Voice Grade Port (Centrex) Basic Local Area			UEP93	UEPYA	1.15	40.19	19.83	24.91	6.63		15.66				
	2-Wire Voice Grade Port (Centrex 800 termination)Basic Local Area			UEP93	UEPYB	1.15	40.19	19.83	24.91	6.63		15.66				
	2-Wire Voice Grade Port (Centrex with Caller ID)1Basic Local Area			UEP93	UEPYH	1.15	40.19	19.83	24.91	6.63		15.66				
	2-Wire Voice Grade Port (Centrex from diff Serving Wire Center)2 Basic Local Area			UEP93	UEPYM	1.15	90.38	57.27	48.66	8.77		15.66				
	2-Wire Voice Grade Port, Diff Serving Wire Center - 800 Service Term - Basic Local Area			UEP93	UEPYZ	1.15	90.38	57.27	48.66	8.77		15.66				
	2-Wire Voice Grade Port terminated in on Megalink or equivalent - Basic Local Area			UEP93	UEPY9	1.15	40.19	19.83	24.91	6.63		15.66				
	2-Wire Voice Grade Port Terminated on 800 Service Term - Basic Local Area			UEP93	UEPY2	1.15	40.19	19.83	24.91	6.63		15.66				
	2-Wire Voice Grade Port (Centrex)			UEP93	UEPQA	1.15	40.19	19.83	24.91	6.63		15.66				
	2-Wire Voice Grade Port (Centrex 800 termination)			UEP93	UEPQB	1.15	40.19	19.83	24.91	6.63		15.66				
	2-Wire Voice Grade Port (Centrex with Caller ID)1			UEP93	UEPQH	1.15	40.19	19.83	24.91	6.63		15.66				
	2-Wire Voice Grade Port (Centrex from diff Serving Wire Center)2			UEP93	UEPQM	1.15	90.38	57.27	48.66	8.77		15.66				
	2-Wire Voice Grade Port, Diff Serving Wire Center - 800 Service Term			UEP93	UEPQZ	1.15	90.38	57.27	48.66	8.77		15.66				
	2-Wire Voice Grade Port terminated in on Megalink or equivalent			UEP93	UEPQ9	1.15	40.19	19.83	24.91	6.63		15.66				
	2-Wire Voice Grade Port Terminated on 800 Service Term			UEP93	UEPQ2	1.15	40.19	19.83	24.91	6.63		15.66				
Local Switching																
	Centrex Intercom Funtionality, per port			UEP93	URECS	0.5488										
Local Number Portability																
	Local Number Portability (1 per port)			UEP93	LNPCC	0.35										
Features																
	All Standard Features Offered, per port			UEP93	UEPVF	1.98										
	All Centrex Control Features Offered, per port			UEP93	UEPVC	1.98										
NARS																
	Unbundled Network Access Register - Combination			UEP93	UARCX	0.00	0.00	0.00								
	Unbundled Network Access Register - Indial			UEP93	UAR1X	0.00	0.00	0.00								
	Unbundled Network Access Register - Outdial			UEP93	UAROX	0.00	0.00	0.00								
Miscellaneous Terminations																
2-Wire Trunk Side																

UNBUNDLED NETWORK ELEMENTS - Alabama														Attachment: 2		Exhibit: B	
CATEGORY	RATE ELEMENTS	Interim	Zone	BCS	USOC	RATES ($)					Svc Order Submitted Elec per LSR	Svc Order Submitted Manually per LSR	Incremental Charge - Manual Svc Order vs. Electronic-1st	Incremental Charge - Manual Svc Order vs. Electronic-Add'l	Incremental Charge - Manual Svc Order vs. Electronic-Disc 1st	Incremental Charge - Manual Svc Order vs. Electronic-Disc Add'l
						Rec	Nonrecurring		Nonrecurring Disconnect		OSS Rates($)					
							First	Add'l	First	Add'l	SOMEC	SOMAN	SOMAN	SOMAN	SOMAN	SOMAN
	Trunk Side Terminations, each			UEP93	CEND6	8.05	119.31	18.74	59.90	3.76		15.66				
4-Wire Digital (1.544 Megabits)																
	DS1 Circuit Terminations, each			UEP93	M1HD1	60.09	202.02	95.69	72.59	2.46		15.66				
	DS0 Channels Activated, Per Channel			UEP93	M1HDO	0.00	14.46					15.66				
Interoffice Channel Mileage - 2-Wire																
	Interoffice Channel Facilities Termination			UEP93	M1GBC	21.13	40.54	27.41	16.74	6.90		15.66				
	Interoffice Channel mileage, per mile or fraction of mile			UEP93	M1GBM	0.008838										
Feature Activations (DS0) Centrex Loops on Channelized DS1 Service																
D4 Channel Bank Feature Activations																
	Feature Activation on D-4 Channel Bank Centrex Loop Slot			UEP93	1PQWS	0.56										
	Feature Activation on D-4 Channel Bank FX Line Side Loop Slot			UEP93	1PQW6	0.56										
	Feature Activation on D-4 Channel Bank FX Trunk Side Loop Slot			UEP93	1PQW7	0.56										
	Feature Activation on D-4 Channel Bank Centrex Loop Slot - Different Wire Center			UEP93	1PQWP	0.56										
	Feature Activation on D-4 Channel Bank Private Line Loop Slot			UEP93	1PQWV	0.56										
	Feature Activation on D-4 Channel Bank Tie Line/Trunk Loop Slot			UEP93	1PQWQ	0.56										
	Feature Activation on D-4 Channel Bank WATS Loop Slot			UEP93	1PQWA	0.56										
Non-Recurring Charges (NRC) Associated with UNE-P Centrex																
	NRC Conversion Currently Combined Switch-As-Is with allowed changes, per port			UEP93	USAC2		0.10	0.10				15.66				
	Conversion of Existing Centrex Common Block, each			UEP93	USACN		37.75	16.58				15.66				
	New Centrex Standard Common Block			UEP93	M1ACS	0.00	667.21					15.66				
	New Centrex Customized Common Block			UEP93	M1ACC	0.00	667.21					15.66				
	NAR Establishment Charge, Per Occasion			UEP93	URECA	0.00	72.73					15.66				
Note 1 - Required Port for Centrex Control in 1AESS, 5ESS & EWSD																
Note 2 - Requres Interoffice Channel Mileage																
Note 3 - Requires Specific Customer Premises Equipment																
Note: Rates displaying an "R" in Interim column are interim and subject to rate true-up as set forth in General Terms and Conditions.																

UNBUNDLED NETWORK ELEMENTS - Florida														Attachment: 2		Exhibit: B	
CATEGORY		RATE ELEMENTS	Interim	Zone	BCS	USOC	RATES ($)					Svc Order Submitted Elec per LSR	Svc Order Submitted Manually per LSR	Incremental Charge - Manual Svc Order vs. Electronic-1st	Incremental Charge - Manual Svc Order vs. Electronic-Add'l	Incremental Charge - Manual Svc Order vs. Electronic-Disc 1st	Incremental Charge - Manual Svc Order vs. Electronic-Disc Add'l
							Rec	Nonrecurring		Nonrecurring Disconnect		OSS Rates($)					
								First	Add'l	First	Add'l	SOMEC	SOMAN	SOMAN	SOMAN	SOMAN	SOMAN
	The "Zone" shown in the sections for stand-alone loops or loops as part of a combination refers to Geographically Deaveraged UNE Zones. To view Geographically Deaveraged UNE Zone Designations by Central Office, refer to internet Website: http://www.interconnection.bellsouth.com/become_a_clec/html/interconnection.htm																
OPERATIONAL SUPPORT SYSTEMS																	
	NOTE: (1) Electronic Service Order: CLEC should contact its contract negotiator if it prefers the state specific electronic service ordering charges as ordered by the State Commissions. The electronic service ordering charge currently contained in this rate exhibit is the BellSouth regional electronic service ordering charge. CLEC may elect either the state specific Commission ordered rates for the electronic service ordering charges, or CLEC may elect the regional electronic service ordering charge.																
	NOTE: (2) Any element that can be ordered electronically will be billed according to the SOMEC rate listed in this category. Please refer to BellSouth's Business Rules for Local Ordering (BBR-LO) to determine if a product can be ordered electronically. For those elements that cannot be ordered electronically at present per the BBR-LO, the listed SOMEC rate in this category reflects the charge that would be billed to a CLEC once electronic ordering capabilities come on-line for that element. Otherwise, the manual ordering charge, SOMAN, will be applied to a CLECs bill when it submits an LSR to BellSouth.																
		Manual Service Order Charge, per LSR, Disconnect Only (FL)				SOMAN				1.83							
		Electronic OSS Charge, per LSR, submitted via BST's OSS interactive interfaces (Regional)				SOMEC		3.50									
UNE SERVICE DATE ADVANCEMENT CHARGE																	
	NOTE: The Expedite charge will be maintained commensurate with BellSouth's FCC No.1 Tariff, Section 5 as applicable.																
		UNE Expedite Charge per Circuit or Line Assignable USOC, per Day			UAL, UEANL, UCL, UEF, UDF, UEQ, UDL, UENTW, UDN, UEA, UHL, ULC, USL, U1T12, U1T48, U1TD1, U1TD3, U1TDX, U1TO3, U1TS1, U1TVX, UC1BC, UC1BL, UC1CC, UC1CL, UC1DC, UC1DL, UC1EC, UC1EL, UC1FC, UC1FL, UC1GC, UC1GL, UC1HC, UC1HL, UDL12, UDL48, UDLO3, UDLSX, UE3, ULD12, ULD48, ULDD1, ULDD3, ULDDX, ULDO3, ULDS1, ULDVX, UNC1X, UNC3X, UNCDX, UNCNX, UNCSX, UNCVX, UNLD1, UNLD3, UXTD1, UXTD3, UXTS1, U1TUC, U1TUD, U1TUB, U1TUA	SDASP		200.00									
UNBUNDLED EXCHANGE ACCESS LOOP																	
	2-WIRE ANALOG VOICE GRADE LOOP																
		2-Wire Analog Voice Grade Loop - Service Level 1- Zone 1		1	UEANL	UEAL2	10.69	49.57	22.83	25.62	6.57		11.90				
		2-Wire Analog Voice Grade Loop - Service Level 1- Zone 2		2	UEANL	UEAL2	15.20	49.57	22.83	25.62	6.57		11.90				
		2-Wire Analog Voice Grade Loop - Service Level 1- Zone 3		3	UEANL	UEAL2	26.97	49.57	22.83	25.62	6.57		11.90				
		Unbundled Miscellaneous Rate Element, Tag Loop at End User Premise			UEANL	URETL		8.33	0.83				11.90				
		Loop Testing - Basic 1st Half Hour			UEANL	URET1		48.65					11.90				
		Loop Testing - Basic Additional Half Hour			UEANL	URETA		23.95					11.90				
		CLEC to CLEC Conversion Charge Without Outside Dispatch (UVL-SL1)			UEANL	UREWO		15.78	8.94				11.90				
		Unbundled Voice Loop, Non-Design Voice Loop, billing for BST providing make-up (Engineering Information - E.I.)			UEANL	UEANM		13.49									
		Manual Order Coordination for UVL-SL1s (per loop)			UEANL	UEAMC		9.00									

UNBUNDLED NETWORK ELEMENTS - Florida														Attachment: 2		Exhibit: B	
CATEGORY		RATE ELEMENTS	Interim	Zone	BCS	USOC	RATES ($)					Svc Order Submitted Elec per LSR	Svc Order Submitted Manually per LSR	Incremental Charge - Manual Svc Order vs. Electronic-1st	Incremental Charge - Manual Svc Order vs. Electronic-Add'l	Incremental Charge - Manual Svc Order vs. Electronic-Disc 1st	Incremental Charge - Manual Svc Order vs. Electronic-Disc Add'l
							Rec	Nonrecurring		Nonrecurring Disconnect		OSS Rates($)					
								First	Add'l	First	Add'l	SOMEC	SOMAN	SOMAN	SOMAN	SOMAN	SOMAN
		Order Coordination for Specified Conversion Time for UVL-SL1 (per LSR)			UEANL	OCOSL		23.02									
	2-WIRE Unbundled COPPER LOOP																
		2-Wire Unbundled Copper Loop - Non-Designed Zone 1	I	1	UEQ	UEQ2X	7.69	44.98	20.90	19.65	5.09		11.90				
		2 Wire Unbundled Copper Loop - Non-Designed - Zone 2	I	2	UEQ	UEQ2X	10.92	44.98	20.90	19.65	5.09		11.90				
		2 Wire Unbundled Copper Loop - Non-Designed - Zone 3	I	3	UEQ	UEQ2X	19.38	44.98	20.90	19.65	5.09		11.90				
		Unbundled Miscellaneous Rate Element, Tag Loop at End User Premise			UEQ	URETL		8.33	0.83				11.90				
		Order Coordination 2 Wire Unbundled Copper Loop - Non-Designed (per loop)			UEQ	USBMC		9.00									
		Unbundled Copper Loop, Non-Design Cooper Loop, billing for BST providing make-up (Engineering Information - E.I.)			UEQ	UEQMU		13.49					11.90				
		Loop Testing - Basic 1st Half Hour			UEQ	URET1		48.65					11.90				
		Loop Testing - Basic Additional Half Hour			UEQ	URETA		23.95					11.90				
		CLEC to CLEC Conversion Charge Without Outside Dispatch (UCL-ND)			UEQ	UREWO		14.27	7.43				11.90				
UNBUNDLED EXCHANGE ACCESS LOOP																	
	2-WIRE ANALOG VOICE GRADE LOOP																
		2 Wire Analog Voice Grade Loop-Service Level 1-Line Splitting-Zone 1		1	UEPSR UEPSB	UEALS	10.69	49.57	22.83	25.62	6.57		11.90				
		2 Wire Analog Voice Grade Loop-Service Level 1-Line Splitting-Zone 1		1	UEPSR UEPSB	UEABS	10.69	49.57	22.83	25.62	6.57		11.90				
		2 Wire Analog Voice Grade Loop- Service Level 1-Line Splitting-Zone 2		2	UEPSR UEPSB	UEALS	15.20	49.57	22.83	25.62	6.57		11.90				
		2 Wire Analog Voice Grade Loop- Service Level 1-Line Splitting-Zone 2		2	UEPSR UEPSB	UEABS	15.20	49.57	22.83	25.62	6.57		11.90				
		2 Wire Analog Voice Grade Loop-Service Level 1-Line Splitting-Zone 3		3	UEPSR UEPSB	UEALS	26.97	49.57	22.83	25.62	6.57		11.90				
		2 Wire Analog Voice Grade Loop-Service Level 1-Line Splitting-Zone 3		3	UEPSR UEPSB	UEABS	26.97	49.57	22.83	25.62	6.57		11.90				
UNBUNDLED EXCHANGE ACCESS LOOP																	
	2-WIRE ANALOG VOICE GRADE LOOP																
		2-Wire Analog Voice Grade Loop - Service Level 2 w/Loop or Ground Start Signaling - Zone 1		1	UEA	UEAL2	12.24	135.75	82.47	63.53	12.01		11.90				
		2-Wire Analog Voice Grade Loop - Service Level 2 w/Loop or Ground Start Signaling - Zone 2		2	UEA	UEAL2	17.40	135.75	82.47	63.53	12.01		11.90				
		2-Wire Analog Voice Grade Loop - Service Level 2 w/Loop or Ground Start Signaling - Zone 3		3	UEA	UEAL2	30.87	135.75	82.47	63.53	12.01		11.90				
		Order Coordination for Specified Conversion Time (per LSR)			UEA	OCOSL		23.02									
		2-Wire Analog Voice Grade Loop - Service Level 2 w/Reverse Battery Signaling - Zone 1		1	UEA	UEAR2	12.24	135.75	82.47	63.53	12.01		11.90				
		2-Wire Analog Voice Grade Loop - Service Level 2 w/Reverse Battery Signaling - Zone 2		2	UEA	UEAR2	17.40	135.75	82.47	63.53	12.01		11.90				
		2-Wire Analog Voice Grade Loop - Service Level 2 w/Reverse Battery Signaling - Zone 3		3	UEA	UEAR2	30.87	135.75	82.47	63.53	12.01		11.90				
		Order Coordination for Specified Conversion Time (per LSR)			UEA	OCOSL		23.02									
		CLEC to CLEC Conversion Charge without outside dispatch			UEA	UREWO		87.71	36.35				11.90				
		Loop Tagging - Service Level 2 (SL2)			UEA	URETL		11.21	1.10				11.90				
	4-WIRE ANALOG VOICE GRADE LOOP																
		4-Wire Analog Voice Grade Loop - Zone 1		1	UEA	UEAL4	18.89	167.86	115.15	67.08	15.56		11.90				
		4-Wire Analog Voice Grade Loop - Zone 2		2	UEA	UEAL4	26.84	167.86	115.15	67.08	15.56		11.90				
		4-Wire Analog Voice Grade Loop - Zone 3		3	UEA	UEAL4	47.62	167.86	115.15	67.08	15.56		11.90				
		Order Coordination for Specified Conversion Time (per LSR)			UEA	OCOSL		23.02									
		CLEC to CLEC Conversion Charge without outside dispatch			UEA	UREWO		87.71	36.35				11.90				
	2-WIRE ISDN DIGITAL GRADE LOOP																
		2-Wire ISDN Digital Grade Loop - Zone 1		1	UDN	U1L2X	19.28	147.69	94.41	62.23	10.71		11.90				
		2-Wire ISDN Digital Grade Loop - Zone 2		2	UDN	U1L2X	27.40	147.69	94.41	62.23	10.71		11.90				
		2-Wire ISDN Digital Grade Loop - Zone 3		3	UDN	U1L2X	48.62	147.69	94.41	62.23	10.71		11.90				
		Order Coordination For Specified Conversion Time (per LSR)			UDN	OCOSL		23.02									

CATEGORY	RATE ELEMENTS	Interim	Zone	BCS	USOC	RATES ($)					Svc Order Submitted Elec per LSR	Svc Order Submitted Manually per LSR	Attachment: 2		Exhibit: B	
													Incremental Charge - Manual Svc Order vs. Electronic-1st	Incremental Charge - Manual Svc Order vs. Electronic-Add'l	Incremental Charge - Manual Svc Order vs. Electronic-Disc 1st	Incremental Charge - Manual Svc Order vs. Electronic-Disc Add'l
						Rec	Nonrecurring		Nonrecurring Disconnect		OSS Rates($)					
							First	Add'l	First	Add'l	SOMEC	SOMAN	SOMAN	SOMAN	SOMAN	SOMAN
	CLEC to CLEC Conversion Charge without outside dispatch			UDN	UREWO		91.61	44.15				11.90				
2-WIRE Universal Digital Channel (UDC) COMPATIBLE LOOP																
	2-Wire Universal Digital Channel (UDC) Compatible Loop - Zone 1		1	UDC	UDC2X	19.28	147.69	94.41	62.23	10.71		11.90				
	2-Wire Universal Digital Channel (UDC) Compatible Loop - Zone 2		2	UDC	UDC2X	27.40	147.69	94.41	62.23	10.71		11.90				
	2-Wire Universal Digital Channel (UDC) Compatible Loop - Zone 3		3	UDC	UDC2X	48.62	147.69	94.41	62.23	10.71		11.90				
	CLEC to CLEC Conversion Charge without outside dispatch			UDC	UREWO		91.61	44.15				11.90				
2-WIRE ASYMMETRICAL DIGITAL SUBSCRIBER LINE (ADSL) COMPATIBLE LOOP																
	2 Wire Unbundled ADSL Loop including manual service inquiry & facility reservation - Zone 1		1	UAL	UAL2X	8.30	149.53	103.85	75.05	15.63		11.90				
	2 Wire Unbundled ADSL Loop including manual service inquiry & facility reservation - Zone 2		2	UAL	UAL2X	11.80	149.53	103.85	75.05	15.63		11.90				
	2 Wire Unbundled ADSL Loop including manual service inquiry & facility reservation - Zone 3		3	UAL	UAL2X	20.94	149.53	103.85	75.05	15.63		11.90				
	Order Coordination for Specified Conversion Time (per LSR)			UAL	OCOSL		23.02									
	2 Wire Unbundled ADSL Loop without manual service inquiry & facility reservaton - Zone 1		1	UAL	UAL2W	8.30	124.83	71.12	60.64	9.12		11.90				
	2 Wire Unbundled ADSL Loop without manual service inquiry & facility reservaton - Zone 2		2	UAL	UAL2W	11.80	124.83	71.12	60.64	9.12		11.90				
	2 Wire Unbundled ADSL Loop without manual service inquiry & facility reservaton - Zone 3		3	UAL	UAL2W	20.94	124.83	71.12	60.64	9.12		11.90				
	Order Coordination for Specified Conversion Time (per LSR)			UAL	OCOSL		23.02									
	CLEC to CLEC Conversion Charge without outside dispatch			UAL	UREWO		86.19	40.39				11.90				
2-WIRE HIGH BIT RATE DIGITAL SUBSCRIBER LINE (HDSL) COMPATIBLE LOOP																
	2 Wire Unbundled HDSL Loop including manual service inquiry & facility reservation - Zone 1		1	UHL	UHL2X	7.22	159.09	113.41	75.05	15.63		11.90				
	2 Wire Unbundled HDSL Loop including manual service inquiry & facility reservation - Zone 2		2	UHL	UHL2X	10.26	159.09	113.41	75.05	15.63		11.90				
	2 Wire Unbundled HDSL Loop including manual service inquiry & facility reservation - Zone 3		3	UHL	UHL2X	18.21	159.09	113.41	75.05	15.63		11.90				
	Order Coordination for Specified Conversion Time (per LSR)			UHL	OCOSL		23.02									
	2 Wire Unbundled HDSL Loop without manual service inquiry and facility reservation - Zone 1		1	UHL	UHL2W	7.22	134.40	80.69	60.64	9.12		11.90				
	2 Wire Unbundled HDSL Loop without manual service inquiry and facility reservation - Zone 2		2	UHL	UHL2W	10.26	134.40	80.69	60.64	9.12		11.90				
	2 Wire Unbundled HDSL Loop without manual service inquiry and facility reservation - Zone 3		3	UHL	UHL2W	18.21	134.40	80.69	60.64	9.12		11.90				
	Order Coordination for Specified Conversion Time (per LSR)			UHL	OCOSL		23.02									
	CLEC to CLEC Conversion Charge without outside dispatch			UHL	UREWO		86.12	40.39				11.90				
4-WIRE HIGH BIT RATE DIGITAL SUBSCRIBER LINE (HDSL) COMPATIBLE LOOP																
	4 Wire Unbundled HDSL Loop including manual service inquiry and facility reservation - Zone 1		1	UHL	UHL4X	10.86	193.31	138.98	77.15	12.61		11.90				
	4-Wire Unbundled HDSL Loop including manual service inquiry and facility reservation - Zone 2		2	UHL	UHL4X	15.44	193.31	138.98	77.15	12.61		11.90				
	4-Wire Unbundled HDSL Loop including manual service inquiry and facility reservation - Zone 3		3	UHL	UHL4X	27.39	193.31	138.98	77.15	12.61		11.90				
	Order Coordination for Specified Conversion Time (per LSR)			UHL	OCOSL		23.02									
	4-Wire Unbundled HDSL Loop without manual service inquiry and facility reservation - Zone 1		1	UHL	UHL4W	10.86	168.62	115.47	62.74	11.22		11.90				
	4-Wire Unbundled HDSL Loop without manual service inquiry and facility reservation - Zone 2		2	UHL	UHL4W	15.44	168.62	115.47	62.74	11.22		11.90				
	4-Wire Unbundled HDSL Loop without manual service inquiry and facility reservation - Zone 3		3	UHL	UHL4W	27.39	168.62	115.47	62.74	11.22		11.90				
	Order Coordination for Specified Conversion Time (per LSR)			UHL	OCOSL		23.02									
	CLEC to CLEC Conversion Charge without outside dispatch			UHL	UREWO		86.12	40.39				11.90				
4-WIRE DS1 DIGITAL LOOP																
	4-Wire DS1 Digital Loop - Zone 1		1	USL	USLXX	70.74	313.75	181.48	61.22	13.53		11.90				

UNBUNDLED NETWORK ELEMENTS - Florida														Attachment: 2		Exhibit: B	
CATEGORY	RATE ELEMENTS	Interim	Zone	BCS	USOC	RATES ($)					Svc Order Submitted Elec per LSR	Svc Order Submitted Manually per LSR	Incremental Charge - Manual Svc Order vs. Electronic-1st	Incremental Charge - Manual Svc Order vs. Electronic-Add'l	Incremental Charge - Manual Svc Order vs. Electronic-Disc 1st	Incremental Charge - Manual Svc Order vs. Electronic-Disc Add'l
						Rec	Nonrecurring		Nonrecurring Disconnect		OSS Rates($)					
							First	Add'l	First	Add'l	SOMEC	SOMAN	SOMAN	SOMAN	SOMAN	SOMAN
	4-Wire DS1 Digital Loop - Zone 2		2	USL	USLXX	100.54	313.75	181.48	61.22	13.53		11.90				
	4-Wire DS1 Digital Loop - Zone 3		3	USL	USLXX	178.39	313.75	181.48	61.22	13.53		11.90				
	Order Coordination for Specified Conversion Time (per LSR)			USL	OCOSL		23.02									
	CLEC to CLEC Conversion Charge without outside dispatch			USL	UREWO		101.07	43.04				11.90				
4-WIRE 19.2, 56 OR 64 KBPS DIGITAL GRADE LOOP																
	4 Wire Unbundled Digital 19.2 Kbps		1	UDL	UDL19	22.20	161.56	108.85	67.08	15.56		11.90				
	4 Wire Unbundled Digital 19.2 Kbps		2	UDL	UDL19	31.56	161.56	108.85	67.08	15.56		11.90				
	4 Wire Unbundled Digital 19.2 Kbps		3	UDL	UDL19	55.99	161.56	108.85	67.08	15.56		11.90				
	4 Wire Unbundled Digital Loop 56 Kbps - Zone 1		1	UDL	UDL56	22.20	161.56	108.85	67.08	15.56		11.90				
	4 Wire Unbundled Digital Loop 56 Kbps - Zone 2		2	UDL	UDL56	31.56	161.56	108.85	67.08	15.56		11.90				
	4 Wire Unbundled Digital Loop 56 Kbps - Zone 3		3	UDL	UDL56	55.99	161.56	108.85	67.08	15.56		11.90				
	Order Coordination for Specified Conversion Time (per LSR)			UDL	OCOSL		23.02									
	4 Wire Unbundled Digital Loop 64 Kbps - Zone 1		1	UDL	UDL64	22.20	161.56	108.85	67.08	15.56		11.90				
	4 Wire Unbundled Digital Loop 64 Kbps - Zone 2		2	UDL	UDL64	31.56	161.56	108.85	67.08	15.56		11.90				
	4 Wire Unbundled Digital Loop 64 Kbps - Zone 3		3	UDL	UDL64	55.99	161.56	108.85	67.08	15.56		11.90				
	Order Coordination for Specified Conversion Time (per LSR)			UDL	OCOSL		23.02									
	CLEC to CLEC Conversion Charge without outside dispatch			UDL	UREWO		102.11	49.74				11.90				
2-WIRE Unbundled COPPER LOOP																
	2-Wire Unbundled Copper Loop/Short including manual service inquiry & facility reservation - Zone 1		1	UCL	UCLPB	8.30	148.50	102.82	75.05	15.63		11.90				
	2-Wire Unbundled Copper Loop/Short including manual service inquiry & facility reservation - Zone 2		2	UCL	UCLPB	11.80	148.50	102.82	75.05	15.63		11.90				
	2 Wire Unbundled Copper Loop/Short including manual service inquiry & facility reservation - Zone 3		3	UCL	UCLPB	20.94	148.50	102.82	75.05	15.63		11.90				
	Order Coordination for Unbundled Copper Loops (per loop)			UCL	UCLMC		9.00	9.00								
	2-Wire Unbundled Copper Loop/Short without manual service inquiry and facility reservation - Zone 1		1	UCL	UCLPW	8.30	123.81	70.09	60.64	9.12		11.90				
	2-Wire Unbundled Copper Loop/Short without manual service inquiry and facility reservation - Zone 2		2	UCL	UCLPW	11.80	123.81	70.09	60.64	9.12		11.90				
	2-Wire Unbundled Copper Loop/Short without manual service inquiry and facility reservation - Zone 3		3	UCL	UCLPW	20.94	123.81	70.09	60.64	9.12		11.90				
	Order Coordination for Unbundled Copper Loops (per loop)			UCL	UCLMC		9.00	9.00								
	2-Wire Unbundled Copper Loop/Long - includes manual srvc. inquiry and facility reservation - Zone 1		1	UCL	UCL2L	17.42	148.50	102.82	75.05	15.63		11.90				
	2-Wire Unbundled Copper Loop/Long - includes manual svc. inquiry and facility reservation - Zone 2		2	UCL	UCL2L	24.76	148.50	102.82	75.05	15.63		11.90				
	2-Wire Unbundled Copper Loop/Long - includes manual svc. inquiry and facility reservation - Zone 3		3	UCL	UCL2L	43.94	148.50	102.82	75.05	15.63		11.90				
	Order Coordination for Unbundled Copper Loops (per loop)			UCL	UCLMC		9.00	9.00								
	2-Wire Unbundled Copper Loop/Long - without manual service inquiry and facility reservation - Zone 1		1	UCL	UCL2W	17.42	123.81	70.09	60.64	9.12		11.90				
	2-Wire Unbundled Copper Loop/Long - without manual service inquiry and facility reservation - Zone 2		2	UCL	UCL2W	24.76	123.81	70.09	60.64	9.12		11.90				
	2-Wire Unbundled Copper Loop/Long - without manual service inquiry and facility reservation - Zone 3		3	UCL	UCL2W	43.94	123.81	70.09	60.64	9.12		11.90				
	Order Coordination for Unbundled Copper Loops (per loop)			UCL	UCLMC		9.00	9.00								
	CLEC to CLEC Conversion Charge without outside dispatch (UCL -Des)			UCL	UREWO		97.21	42.47				11.90				
4-WIRE COPPER LOOP																
	4-Wire Copper Loop/Short - including manual service inquiry and facility reservation - Zone 1		1	UCL	UCL4S	11.83	177.87	132.76	77.15	17.73		11.90				
	4-Wire Copper Loop/Short - including manual service inquiry and facility reservation - Zone 2		2	UCL	UCL4S	16.81	177.87	132.76	77.15	17.73		11.90				
	4-Wire Copper Loop/Short - including manual service inquiry and facility reservation - Zone 3		3	UCL	UCL4S	29.82	177.87	132.76	77.15	17.73		11.90				
	Order Coordination for Unbundled Copper Loops (per loop)			UCL	UCLMC		9.00	9.00								
	4-Wire Copper Loop/Short - without manual service inquiry and facility reservation - Zone 1		1	UCL	UCL4W	11.83	153.18	100.03	62.74	11.22		11.90				

UNBUNDLED NETWORK ELEMENTS - Florida														Attachment: 2		Exhibit: B	
CATEGORY		RATE ELEMENTS	Interim	Zone	BCS	USOC	RATES ($)					Svc Order Submitted Elec per LSR	Svc Order Submitted Manually per LSR	Incremental Charge - Manual Svc Order vs. Electronic-1st	Incremental Charge - Manual Svc Order vs. Electronic-Add'l	Incremental Charge - Manual Svc Order vs. Electronic-Disc 1st	Incremental Charge - Manual Svc Order vs. Electronic-Disc Add'l
							Rec	Nonrecurring		Nonrecurring Disconnect		OSS Rates($)					
								First	Add'l	First	Add'l	SOMEC	SOMAN	SOMAN	SOMAN	SOMAN	SOMAN
		4-Wire Copper Loop/Short - without manual service inquiry and facility reservation - Zone 2		2	UCL	UCL4W	16.81	153.18	100.03	62.74	11.22		11.90				
		4-Wire Copper Loop/Short - without manual service inquiry and facility reservation - Zone 3		3	UCL	UCL4W	29.82	153.18	100.03	62.74	11.22		11.90				
		Order Coordination for Unbundled Copper Loops (per loop)			UCL	UCLMC		9.00	9.00								
		4-Wire Unbundled Copper Loop/Long - includes manual svc. inquiry and facility reservation - Zone 1		1	UCL	UCL4L	31.10	177.87	132.76	77.15	17.73		11.90				
		4-Wire Unbundled Copper Loop/Long - includes manual svc. inquiry and facility reservation - Zone 2		2	UCL	UCL4L	44.20	177.87	132.76	77.15	17.73		11.90				
		4-Wire Unbundled Copper Loop/Long - includes manual svc. inquiry and facility reservation - Zone 3		3	UCL	UCL4L	78.42	177.87	132.76	77.15	17.73		11.90				
		Order Coordination for Unbundled Copper Loops (per loop)			UCL	UCLMC		9.00	9.00								
		4-Wire Unbundled Copper Loop/Long - without manual svc. inquiry and facility reservation - Zone 1		1	UCL	UCL4O	31.10	153.18	100.03	62.74	11.22		11.90				
		4-Wire Unbundled Copper Loop/Long - without manual svc. inquiry and facility reservation - Zone 2		2	UCL	UCL4O	44.20	153.18	100.03	62.74	11.22		11.90				
		4-Wire Unbundled Copper Loop/Long - without manual svc. inquiry and facility reservation - Zone 3		3	UCL	UCL4O	78.42	153.18	100.03	62.74	11.22		11.90				
		Order Coordination for Unbundled Copper Loops (per loop)			UCL	UCLMC		9.00	9.00								
		CLEC to CLEC Conversion Charge without outside dispatch			UCL	UREWO		97.21	42.47				11.90				
LOOP MODIFICATION																	
		Unbundled Loop Modification, Removal of Load Coils - 2 Wire pair less than or equal to 18k ft			UAL, UHL, UCL, UEQ, ULS, UEA, UEANL, UEPSR, UEPSB	ULM2L		0.00	0.00				11.90				
		Unbundled Loop Modification, Removal of Load Coils - 2 wire greater than 18k ft			UCL, ULS, UEQ	ULM2G		343.12	343.12				11.90				
		Unbundled Loop Modification Removal of Load Coils - 4 Wire less than or equal to 18K ft			UHL, UCL, UEA	ULM4L		0.00	0.00				11.90				
		Unbundled Loop Modification Removal of Load Coils - 4 Wire pair greater than 18k ft			UCL	ULM4G		343.12	343.12				11.90				
		Unbundled Loop Modification Removal of Bridged Tap Removal, per unbundled loop			UAL, UHL, UCL, UEQ, ULS, UEA, UEANL, UEPSR, UEPSB	ULMBT		10.52	10.52				11.90				
SUB-LOOPS																	
	Sub-Loop Distribution																
		Sub-Loop - Per Cross Box Location - CLEC Feeder Facility Set-Up	I		UEANL	USBSA		487.23					11.90				
		Sub-Loop - Per Cross Box Location - Per 25 Pair Panel Set-Up	I		UEANL	USBSB		6.25					11.90				
		Sub-Loop - Per Building Equipment Room - CLEC Feeder Facility Set-Up	I		UEANL	USBSC		169.25					11.90				
		Sub-Loop - Per Building Equipment Room - Per 25 Pair Panel Set-Up	I		UEANL	USBSD		38.65					11.90				
		Sub-Loop Distribution Per 2-Wire Analog Voice Grade Loop - Zone 1		1	UEANL	USBN2	6.46	60.19	21.78	47.50	5.26		11.90				
		Sub-Loop Distribution Per 2-Wire Analog Voice Grade Loop - Zone 2		2	UEANL	USBN2	9.18	60.19	21.78	47.50	5.26		11.90				
		Sub-Loop Distribution Per 2-Wire Analog Voice Grade Loop - Zone 3		3	UEANL	USBN2	16.29	60.19	21.78	47.50	5.26		11.90				
		Order Coordination for Unbundled Sub-Loops, per sub-loop pair			UEANL	USBMC		9.00									
		Sub-Loop Distribution Per 4-Wire Analog Voice Grade Loop - Zone 1		1	UEANL	USBN4	7.37	68.83	30.42	49.71	6.60		11.90				
		Sub-Loop Distribution Per 4-Wire Analog Voice Grade Loop - Zone 2		2	UEANL	USBN4	10.47	68.83	30.42	49.71	6.60		11.90				
		Sub-Loop Distribution Per 4-Wire Analog Voice Grade Loop - Zone 3		3	UEANL	USBN4	18.58	68.83	30.42	49.71	6.60		11.90				

UNBUNDLED NETWORK ELEMENTS - Florida														Attachment: 2		Exhibit: B	
CATEGORY		RATE ELEMENTS	Interim	Zone	BCS	USOC	RATES ($)					Svc Order Submitted Elec per LSR	Svc Order Submitted Manually per LSR	Incremental Charge - Manual Svc Order vs. Electronic-1st	Incremental Charge - Manual Svc Order vs. Electronic-Add'l	Incremental Charge - Manual Svc Order vs. Electronic-Disc 1st	Incremental Charge - Manual Svc Order vs. Electronic-Disc Add'l
							Rec	Nonrecurring		Nonrecurring Disconnect		OSS Rates($)					
								First	Add'l	First	Add'l	SOMEC	SOMAN	SOMAN	SOMAN	SOMAN	SOMAN
		Order Coordination for Unbundled Sub-Loops, per sub-loop pair			UEANL	USBMC		9.00									
		Sub-Loop 2-Wire Intrabuilding Network Cable (INC)	I		UEANL	USBR2	3.96	51.84	13.44	47.50	5.26		11.90				
		Order Coordination for Unbundled Sub-Loops, per sub-loop pair			UEANL	USBMC		9.00									
		Sub-Loop 4-Wire Intrabuilding Network Cable (INC)	I		UEANL	USBR4	9.37	55.91	17.51	49.71	6.60		11.90				
		Order Coordination for Unbundled Sub-Loops, per sub-loop pair			UEANL	USBMC		9.00									
		2 Wire Copper Unbundled Sub-Loop Distribution - Zone 1	I	1	UEF	UCS2X	5.15	60.19	21.78	47.50	5.26		11.90				
		2 Wire Copper Unbundled Sub-Loop Distribution - Zone 2	I	2	UEF	UCS2X	7.31	60.19	21.78	47.50	5.26		11.90				
		2 Wire Copper Unbundled Sub-Loop Distribution - Zone 3	I	3	UEF	UCS2X	12.98	60.19	21.78	47.50	5.26		11.90				
		Order Coordination for Unbundled Sub-Loops, per sub-loop pair			UEF	USBMC		9.00									
		4 Wire Copper Unbundled Sub-Loop Distribution - Zone 1	I	1	UEF	UCS4X	5.36	68.83	30.42	49.71	6.60		11.90				
		4 Wire Copper Unbundled Sub-Loop Distribution - Zone 2	I	2	UEF	UCS4X	7.61	68.83	30.42	49.71	6.60		11.90				
		4 Wire Copper Unbundled Sub-Loop Distribution - Zone 3	I	3	UEF	UCS4X	13.51	68.83	30.42	49.71	6.60		11.90				
		Order Coordination for Unbundled Sub-Loops, per sub-loop pair			UEF	USBMC		9.00									
	Unbundled Network Terminating Wire (UNTW)																
		Unbundled Network Terminating Wire (UNTW) per Pair			UENTW	UENPP	0.4572	18.02					11.90				
	Network Interface Device (NID)																
		Network Interface Device (NID) - 1-2 lines			UENTW	UND12		71.49	48.87				11.90				
		Network Interface Device (NID) - 1-6 lines			UENTW	UND16		113.89	89.07				11.90				
		Network Interface Device Cross Connect - 2 W			UENTW	UNDC2		7.63	7.63				11.90				
		Network Interface Device Cross Connect - 4W			UENTW	UNDC4		7.63	7.63				11.90				
SUB-LOOPS																	
	Sub-Loop Feeder																
		USL-Feeder, DS0 Set-up per Cross Box location - CLEC Distribution Facility set-up			UEA, UDN,UCL,UDL,UDC	USBFW		487.23					11.90				
		USL Feeder - DS0 Set-up per Cross Box location - per 25 pair set-up			UEA, UDN,UCL,UDL,UDC	USBFX		6.25	6.25				11.90				
		USL Feeder DS1 Set-up at DSX location, per DS1 termination			USL	USBFZ		522.41	11.32				11.90				
		Unbundled Sub-Loop Feeder Loop, 2 Wire Ground Start, Voice Grade - Zone 1		1	UEA	USBFA	6.41	92.75	51.24	58.45	13.07		11.90				
		Unbundled Sub-Loop Feeder Loop, 2 Wire Ground-Start, Voice Grade - Zone 2		2	UEA	USBFA	9.10	92.75	51.24	58.45	13.07		11.90				
		Unbundled Sub-Loop Feeder Loop, Per 2 Wire Ground-Start, Voice Grade - Zone 3		3	UEA	USBFA	16.15	92.75	51.24	58.45	13.07		11.90				
		Order Coordination for Specified Conversion Time, per LSR			UEA	OCOSL		23.02									
		Unbundlde Sub-Loop Feeder Loop, 2 Wire Loop-Start, Voice Grade - Zone 1		1	UEA	USBFB	6.41	92.75	51.24	58.45	13.07		11.90				
		Unbundled Sub-Loop Feeder Loop, 2 Wire Loop-Start, Voice Grade - Zone 2		2	UEA	USBFB	9.10	92.75	51.24	58.45	13.07		11.90				
		Unbundled Sub-Loop Feeder Loop, 2 Wire Start Loop, Voice Grade - Zone 3		3	UEA	USBFB	16.15	92.75	51.24	58.45	13.07		11.90				
		Order Coordination for Specified Time Conversion, per LSR			UEA	OCOSL		23.02									
		Unbundled Sub-Loop Feeder Loop, 2 Wire Reverse Battery, Voice Grade - Zone 1		1	UEA	USBFC	6.41	92.75	51.24	58.45	13.07		11.90				
		Unbundled Sub-Loop Feeder Loop, 2 Wire Reverse Battery, Voice Grade - Zone 2		2	UEA	USBFC	9.10	92.75	51.24	58.45	13.07		11.90				
		Unbundled Sub-Loop Feeder Loop, 2 Wire Analog Reverse Battery, Voice Grade - Zone 3		3	UEA	USBFC	16.15	92.75	51.24	58.45	13.07		11.90				
		Order Coordination For Specified Conversion Time, per LSR			UEA	OCOSL		23.02									
		Unbundled Sub-Loop Feeder Loop, 4 Wire Ground-Start, Voice Grade - Zone 1		1	UEA	USBFD	12.47	106.92	64.46	63.54	14.83		11.90				
		Unbundled Sub-Loop Feeder Loop, 4 Wire Ground-Start, Voice Grade - Zone 2		2	UEA	USBFD	17.73	106.92	64.46	63.54	14.83		11.90				
		Unbundled Sub-Loop Feeder Loop, 4 Wire Ground Start, Voice Grade - Zone 3		3	UEA	USBFD	31.45	106.92	64.46	63.54	14.83		11.90				

CATEGORY	RATE ELEMENTS	Interim	Zone	BCS	USOC	RATES ($)					Svc Order Submitted Elec per LSR	Svc Order Submitted Manually per LSR	Attachment: 2		Exhibit: B	
													Incremental Charge - Manual Svc Order vs. Electronic-1st	Incremental Charge - Manual Svc Order vs. Electronic-Add'l	Incremental Charge - Manual Svc Order vs. Electronic-Disc 1st	Incremental Charge - Manual Svc Order vs. Electronic-Disc Add'l
						Rec	Nonrecurring		Nonrecurring Disconnect		OSS Rates($)					
							First	Add'l	First	Add'l	SOMEC	SOMAN	SOMAN	SOMAN	SOMAN	SOMAN
	Order Coordination For Specified Conversion Time, Per LSR			UEA	OCOSL		23.02									
	Unbundled Sub-Loop Feeder Loop, 4 Wire Loop-Start, Voice Grade - Zone 1		1	UEA	USBFE	12.47	106.92	64.46	63.54	14.83		11.90				
	Unbundled Sub-Loop Feeder Loop, 4 Wire Loop-Start, Voice Grade - Zone 2		2	UEA	USBFE	17.73	106.92	64.46	63.54	14.83		11.90				
	Unbundled Sub-Loop Feeder Loop, 4 Wire Loop-Start, Voice Grade - Zone 3		3	UEA	USBFE	31.45	106.92	64.46	63.54	14.83		11.90				
	Order Coordination For Specified Conversion Time, Per LSR			UEA	OCOSL		23.02									
	Unbundled Sub-Loop Feeder Loop, 2 Wire ISDN BRI - Zone 1		1	UDN	USBFF	14.83	109.71	66.68	60.21	12.49		11.90				
	Unbundled Sub-Loop Feeder Loop, 2-Wire ISDN BRI - Zone 2		2	UDN	USBFF	21.07	109.71	66.68	60.21	12.49		11.90				
	Unbundled Sub-Loop Feeder Loop, 2-Wire ISDN BRI - Zone 3		3	UDN	USBFF	37.39	109.71	66.68	60.21	12.49		11.90				
	Order Coordination For Specified Conversion Time, Per LSR			UDN	OCOSL		23.02									
	Unbundled Sub-Loop Feeder, 2 Wire UDC (IDSL compatible)		1	UDC	USBFS	14.83	109.71	66.68	60.21	12.49		11.90				
	Unbundled Sub-Loop Feeder, 2 Wire UDC (IDSL compatible)		2	UDC	USBFS	21.07	109.71	66.68	60.21	12.49		11.90				
	Unbundled Sub-Loop Feeder, 2 Wire UDC (IDSL compatible)		3	UDC	USBFS	37.39	109.71	66.68	60.21	12.49		11.90				
	Unbundled Sub-Loop Feeder Loop, 4-Wire DS1 - Zone 1		1	USL	USBFG	42.59	133.77	78.02	85.16	21.21		11.90				
	Unbundled Sub-Loop Feeder Loop, 4-Wire DS1 - Zone 2		2	USL	USBFG	60.53	133.77	78.02	85.16	21.21		11.90				
	Unbundled Sub-Loop Feeder Loop, 4-Wire DS1 - Zone 3		3	USL	USBFG	107.39	133.77	78.02	85.16	21.21		11.90				
	Order Coordination For Specified Conversion Time, Per LSR			USL	OCOSL		23.02									
	Unbundled Sub-Loop Feeder, 2-Wire Copper Loop - Zone 1		1	UCL	USBFH	3.76	85.27	42.24	58.54	10.82		11.90				
	Unbundled Sub-Loop Feeder Loop, 2-Wire Copper Loop - Zone 2		2	UCL	USBFH	5.35	85.27	42.24	58.54	10.82		11.90				
	Unbundled Sub-Loop Feeder Loop, 2-Wire Copper Loop - Zone 3		3	UCL	USBFH	9.49	85.27	42.24	58.54	10.82		11.90				
	Order Coordination For Specified Conversion Time, per LSR			UCL	OCOSL		23.02									
	Sub-Loop Feeder - Per 4-Wire Copper Loop - Zone 1		1	UCL	USBFJ	7.32	99.66	57.20	60.98	12.28		11.90				
	Sub-Loop Feeder - Per 4-Wire Copper Loop - Zone 2		2	UCL	USBFJ	10.40	99.66	57.20	60.98	12.28		11.90				
	Sub-Loop Feeder - Per 4-Wire Copper Loop - Zone 3		3	UCL	USBFJ	18.46	99.66	57.20	60.98	12.28		11.90				
	Order Coordination For Specified Conversion Time, per LSR			UCL	OCOSL		23.02									
	Sub-Loop Feeder - Per 4-Wire 19.2 Kbps Digital Grade Loop		1	UDL	USBFN	14.48	100.62	58.16	63.54	14.83		11.90				
	Sub-Loop Feeder - Per 4-Wire 19.2 Kbps Digital Grade Loop		2	UDL	USBFN	20.59	100.62	58.16	63.54	14.83		11.90				
	Sub-Loop Feeder - Per 4-Wire 19.2 Kbps Digital Grade Loop		3	UDL	USBFN	36.53	100.62	58.16	63.54	14.83		11.90				
	Sub-Loop Feeder - Per 4-Wire 56 Kbps Digital Grade Loop - Zone 1		1	UDL	USBFO	14.48	100.62	58.16	63.54	14.83		11.90				
	Sub-Loop Feeder - Per 4-Wire 56 Kbps Digital Grade Loop - Zone 2		2	UDL	USBFO	20.59	100.62	58.16	63.54	14.83		11.90				
	Sub-Loop Feeder - Per 4-Wire 56 Kbps Digital Grade Loop - Zone 3		3	UDL	USBFO	36.53	100.62	58.16	63.54	14.83		11.90				
	Order Coordination For Specified Time Conversion, per LSR			UDL	OCOSL		23.02									
	Sub-Loop Feeder - Per 4-Wire 64 Kbps Digital Grade Loop - Zone 1		1	UDL	USBFP	14.48	100.62	58.16	63.54	14.83		11.90				
	Sub-Loop Feeder - Per 4-Wire 64 Kbps Digital Grade Loop - Zone 2		2	UDL	USBFP	20.59	100.62	58.16	63.54	14.83		11.90				
	Sub-Loop Feeder - Per 4-Wire 64 Kbps Digital Grade Loop - Zone 3		3	UDL	USBFP	36.53	100.62	58.16	63.54	14.83		11.90				
	Order Coordination For Specified Conversion Time, per LSR			UDL	OCOSL		23.02									
SUB-LOOPS																
Sub-Loop Feeder																
	Sub Loop Feeder - DS3 - Per Mile Per Month	I		UE3	1L5SL	15.69										
	Sub Loop Feeder - DS3 - Facility Termination Per Month	I		UE3	USBF1	347.59	3,402.59	407.15	166.83	94.58		11.90				
	Sub Loop Feeder – STS-1 – Per Mile Per Month	I		UDLSX	1L5SL	15.69										
	Sub Loop Feeder - STS-1 - Facility Termination Per Month	I		UDLSX	USBF7	402.09	3,402.59	407.15	166.83	94.58		11.90				
UNBUNDLED LOOP CONCENTRATION																
	Unbundled Loop Concentration - System A (TR008)			ULC	UCT8A	449.49	359.42	359.42				11.90				
	Unbundled Loop Concentration - System B (TR008)			ULC	UCT8B	53.44	149.76	149.76				11.90				
	Unbundled Loop Concentration - System A (TR303)			ULC	UCT3A	487.33	359.42	359.42				11.90				
	Unbundled Loop Concentration - System B (TR303)			ULC	UCT3B	90.05	149.76	149.76				11.90				
	Unbundled Loop Concentration - DS1 Loop Interface Card			ULC	UCTCO	5.04	71.70	51.52	18.49	4.82		11.90				

UNBUNDLED NETWORK ELEMENTS - Florida														Attachment: 2		Exhibit: B	
CATEGORY		RATE ELEMENTS	Interim	Zone	BCS	USOC	RATES ($)					Svc Order Submitted Elec per LSR	Svc Order Submitted Manually per LSR	Incremental Charge - Manual Svc Order vs. Electronic-1st	Incremental Charge - Manual Svc Order vs. Electronic-Add'l	Incremental Charge - Manual Svc Order vs. Electronic-Disc 1st	Incremental Charge - Manual Svc Order vs. Electronic-Disc Add'l
							Rec	Nonrecurring		Nonrecurring Disconnect		OSS Rates($)					
								First	Add'l	First	Add'l	SOMEC	SOMAN	SOMAN	SOMAN	SOMAN	SOMAN
		Unbundled Loop Concentration - ISDN Loop Interface (Brite Card)			UDN	ULCC1	8.00	16.59	16.50	6.77	6.73		11.90				
		Unbundled Loop Concentration - UDC Loop Interface (Brite Card)			UDC	ULCCU	8.00	16.59	16.50	6.77	6.73		11.90				
		Unbundled Loop Concentration - -2 Wire Voice-Loop Start or Ground Start Loop Interface (POTS Card)			UEA	ULCC2	2.00	16.59	16.50	6.77	6.73		11.90				
		Unbundled Loop Concentration - 2 Wire Voice - Reverse Battery Loop Interface (SPOTS Card)			UEA	ULCCR	11.90	16.59	16.50	6.77	6.73		11.90				
		Unbundled Loop Concentration - 4 Wire Voice Loop Interface (Specials Card)			UEA	ULCC4	7.10	16.59	16.50	6.77	6.73		11.90				
		Unbundled Loop Concentration - TEST CIRCUIT Card			ULC	UCTTC	34.68	16.59	16.50	6.77	6.73		11.90				
		Unbundled Loop Concentration - Digital 19.2 Kbps Data Loop Interface			UDL	ULCC7	10.51	16.59	16.50	6.77	6.73		11.90				
		Unbundled Loop Concentration - Digital 56 Kbps Data Loop Interface			UDL	ULCC5	10.51	16.59	16.50	6.77	6.73		11.90				
		Unbundled Loop Concentration - Digital 64 Kbps Data Loop Interface			UDL	ULCC6	10.51	16.59	16.50	6.77	6.73		11.90				
UNE OTHER, PROVISIONING ONLY - NO RATE																	
		NID - Dispatch and Service Order for NID installation			UENTW	UNDBX	0.00	0.00									
		UNTW Circuit Id Establishment, Provisioning Only - No Rate			UENTW	UENCE	0.00	0.00									
		Unbundled Contract Name, Provisioning Only - No Rate			UEANL,UEF,UEQ,UENTW	UNECN	0.00	0.00									
UNE OTHER, PROVISIONING ONLY - NO RATE																	
		Unbundled Contact Name, Provisioning Only - no rate			UAL,UCL,UDC,UDL,UDN,UEA,UHL,ULC	UNECN	0.00	0.00									
		Unbundled Sub-Loop Feeder-2 Wire Cross Box Jumper - no rate			UEA,UDN,UCL,UDC	USBFQ	0.00	0.00									
		Unbundled Sub-Loop Feeder-4 Wire Cross Box Jumper - no rate			UEA,USL,UCL,UDL	USBFR	0.00	0.00									
		Unbundled DS1 Loop - Superframe Format Option - no rate			USL	CCOSF	0.00	0.00									
		Unbundled DS1 Loop - Expanded Superframe Format option - no rate			USL	CCOEF	0.00	0.00									
HIGH CAPACITY UNBUNDLED LOCAL LOOP																	
	NOTE: minimum billing period of three months for DS3/STS-1 Local Loop																
		High Capacity Unbundled Local Loop - DS3 - Per Mile per month			UE3	1L5ND	10.92										
		High Capacity Unbundled Local Loop - DS3 - Facility Termination per month			UE3	UE3PX	386.88	556.37	343.01	139.13	96.84		11.90				
		High Capacity Unbundled Local Loop - STS-1 - Per Mile per month			UDLSX	1L5ND	10.92										
		High Capacity Unbundled Local Loop - STS-1 - Facility Termination per month			UDLSX	UDLS1	426.60	556.37	343.01	139.13	96.84		11.90			1.83	
LOOP MAKE-UP																	
		Loop Makeup - Preordering Without Reservation, per working or spare facility queried (Manual).			UMK	UMKLW		52.17	52.17								
		Loop Makeup - Preordering With Reservation, per spare facility queried (Manual).			UMK	UMKLP		55.07	55.07								
HIGH FREQUENCY SPECTRUM																	
	LINE SHARING																
	SPLITTERS-CENTRAL OFFICE BASED																
		Line Sharing Splitter, per System 96 Line Capacity - True up pending approval by PSC	R		ULS	ULSDA	119.72	379.13	0.00	347.90	0.00		11.90				
		Line Sharing Splitter, per System 24 Line Capacity - True up pending approval by PSC	R		ULS	ULSDB	29.93	379.13	0.00	347.90	0.00		11.90				
		Line Sharing Splitter, Per System, 8 Line Capacity	I		ULS	ULSD8	8.33	379.13	0.00	347.90	0.00		11.90				
		Line Sharing-DLEC Owned Splitter in CO-CFA activaton-deactivation (per LSOD)			ULS	ULSDG		173.66	0.00	97.42	0.00		11.90				
	END USER ORDERING-CENTRAL OFFICE BASED-HIGH FREQUENCY SPECTRUM AKA LINE SHARING																

UNBUNDLED NETWORK ELEMENTS - Florida														Attachment: 2		Exhibit: B	
CATEGORY		RATE ELEMENTS	Interim	Zone	BCS	USOC	RATES ($)					Svc Order Submitted Elec per LSR	Svc Order Submitted Manually per LSR	Incremental Charge - Manual Svc Order vs. Electronic-1st	Incremental Charge - Manual Svc Order vs. Electronic-Add'l	Incremental Charge - Manual Svc Order vs. Electronic-Disc 1st	Incremental Charge - Manual Svc Order vs. Electronic-Disc Add'l
							Rec	Nonrecurring		Nonrecurring Disconnect				OSS Rates($)			
								First	Add'l	First	Add'l	SOMEC	SOMAN	SOMAN	SOMAN	SOMAN	SOMAN
		Line Sharing - per Line Activation -(BST Owned Splitter)			ULS	ULSDC	0.61	29.68	21.28	19.57	9.61		11.90				
		Line Sharing - per Subsequent Activity per Line Rearrangement - True up pending approval by PSC(BST Owned Splitter)	R		ULS	ULSDS		21.68	16.44				11.90				
		Line Sharing - per Subsequent Activity per Line Rearrangement - True up pending approval by PSC(DLEC Owned Splitter)	R		ULS	ULSCS		21.68	16.44				11.90				
		Line Sharing - per Line Activation (DLEC owned Splitter)	I		ULS	ULSCC	0.61	47.44	19.31	20.67	12.74		11.90				
	LINE SPLITTING																
	END USER ORDERING-CENTRAL OFFICE BASED																
		Line Splitting - per line activation DLEC owned splitter	I		UEPSR UEPSB	UREOS	0.61										
		Line Splitting - per line activation BST owned - physical	I		UEPSR UEPSB	UREBP	0.61	29.68	21.28	19.57	9.61		11.90				
		Line Splitting - per line activation BST owned - virtual	I		UEPSR UEPSB	UREBV	1.134	29.68	21.28	19.57	9.61		11.90				
	REMOTE SITE HIGH FREQUENCY SPECTRUM																
	SPLITTERS-REMOTE SITE																
		Remote Site Line Share BellSouth Owned Splitter, 24 Port	I		ULS	ULSRB	46.07	114.81	0.00	86.20	0.00		11.90				
		Remote Site Line Share Cable Pair Activation CLEC Owned at RS and deactivation	I		ULS	ULSTG		95.64	0.00	69.19	0.00		11.90				
	END USER ORDERING-REMOTE SITE HIGH FREQUENCY SPECTRUM AKA REMOTE SITE LINE SHARING																
		Remote Site Line Share Line Activationfor End User Served at RS, BST Splitter	I		ULS	ULSRC	0.61	40.00	22.00	19.57	9.61		11.90				
		RS Line Share Line Activation for End User served at RS, CLEC Splitter	I		ULS	ULSTC	0.61	40.00	22.00	19.57	9.61		11.90				
		Remote Site Line Share Subsequent Activity-RS BST Owned Splitter	I		ULS	ULSRS		49.15	17.83				11.90				
		Remote Site Line Share Subsequent Activity-RS CLEC Owned Splitter	I		ULS	ULSTS		49.15	17.83				11.90				
UNBUNDLED DEDICATED TRANSPORT																	
	NOTE: INTEROFFICE CHANNEL DEDICATED TRANSPORT - minimum billing period - below DS3=one month, DS3/STS-1=four months																
	INTEROFFICE CHANNEL - DEDICATED TRANSPORT																
		Interoffice Channel - Dedicated Transport - 2-Wire Voice Grade - Per Mile per month			U1TVX	1L5XX	0.0091										
		Interoffice Channel - Dedicated Transport- 2- Wire Voice Grade - Facility Termination			U1TVX	U1TV2	25.32	47.35	31.78	18.31	7.03		11.90				
		Interoffice Channel - Dedicated Transpor t- 2-Wire Voice Grade Rev Bat. - Per Mile per month			U1TVX	1L5XX	0.0091										
		Interoffice Channel - Dedicated Transport- 2- Wire VG Rev Bat. - Facility Termination			U1TVX	U1TR2	25.32	47.35	31.78	18.31	7.03		11.90				
		Interoffice Channel - Dedicated Transport - 4-Wire Voice Grade - Per Mile per month			U1TVX	1L5XX	0.0091										
		Interoffice Channel - Dedicated Transport - 4- Wire Voice Grade - Facility Termination			U1TVX	U1TV4	22.58	47.35	31.78	18.31	7.03		11.90				
		Interoffice Channel - Dedicated Transport - 56 kbps - per mile per month			U1TDX	1L5XX	0.0091										
		Interoffice Channel - Dedicated Transport - 56 kbps - Facility Termination			U1TDX	U1TD5	18.44	47.35	31.78	18.31	7.03		11.90				
		Interoffice Channel - Dedicated Transport - 64 kbps - per mile per month			U1TDX	1L5XX	0.0091										
		Interoffice Channel - Dedicated Transport - 64 kbps - Facility Termination			U1TDX	U1TD6	18.44	47.35	31.78	18.31	7.03		11.90				
		Interoffice Channel - Dedicated Channel - DS1 - Per Mile per month			U1TD1	1L5XX	0.1856										
		Interoffice Channel - Dedicated Tranport - DS1 - Facility Termination			U1TD1	U1TF1	88.44	105.54	98.47	21.47	19.05		11.90				
		Interoffice Channel - Dedicated Transport - DS3 - Per Mile per month			U1TD3	1L5XX	3.87										
		Interoffice Channel - Dedicated Transport - DS3 - Facility Termination per month			U1TD3	U1TF3	1,071.00	335.46	219.28	72.03	70.56		11.90				

UNBUNDLED NETWORK ELEMENTS - Florida													Attachment: 2		Exhibit: B	
CATEGORY	RATE ELEMENTS	Interim	Zone	BCS	USOC	RATES ($)					Svc Order Submitted Elec per LSR	Svc Order Submitted Manually per LSR	Incremental Charge - Manual Svc Order vs. Electronic-1st	Incremental Charge - Manual Svc Order vs. Electronic-Add'l	Incremental Charge - Manual Svc Order vs. Electronic-Disc 1st	Incremental Charge - Manual Svc Order vs. Electronic-Disc Add'l
						Rec	Nonrecurring		Nonrecurring Disconnect		OSS Rates($)					
							First	Add'l	First	Add'l	SOMEC	SOMAN	SOMAN	SOMAN	SOMAN	SOMAN
	Interoffice Channel - Dedicated Transport - STS-1 - Per Mile per month			U1TS1	1L5XX	3.87										
	Interoffice Channel - Dedicated Transport - STS-1 - Facility Termination			U1TS1	U1TFS	1,056.00	335.46	219.28	72.03	70.56		11.90				
	LOCAL CHANNEL - DEDICATED TRANSPORT															
	NOTE: LOCAL CHANNEL DEDICATED TRANSPORT - minimum billing period = below DS3=one month, DS3/STS-1=four months															
	Local Channel - Dedicated - 2-Wire Voice Grade - Zone 1		1	ULDVX	ULDV2	19.66	265.84	46.97	37.63	4.00		11.90				
	Local Channel - Dedicated - 2-Wire Voice Grade - Zone 2		2	ULDVX	ULDV2	27.94	265.84	46.97	37.63	4.00		11.90				
	Local Channel - Dedicated - 2-Wire Voice Grade - Zone 3		3	UNDVX	ULDV2	49.58	265.84	46.97	37.63	4.00		11.90				
	Local Channel - Dedicated - 2-Wire Voice Grade Rev. Bat. - Zone 1		1	ULDVX	ULDR2	19.66	265.84	46.97	37.63	4.00		11.90				
	Local Channel - Dedicated - 2-Wire Voice Grade Rev. Bat. - Zone 2		2	ULDVX	ULDR2	27.94	265.84	46.97	37.63	4.00		11.90				
	Local Channel - Dedicated - 2-Wire Voice Grade Rev. Bat. - Zone 3		3	ULDVX	ULDR2	49.58	265.84	46.97	37.63	4.00		11.90				
	Local Channel - Dedicated - 4-Wire Voice Grade - Zone 1		1	ULDVX	ULDV4	20.45	266.54	47.67	44.22	5.33		11.90				
	Local Channel - Dedicated - 4-Wire Voice Grade - Zone 2		2	ULDVX	ULDV4	29.06	266.54	47.67	44.22	5.33		11.90				
	Local Channel - Dedicated - 4-Wire Voice Grade - Zone 3		3	ULDVX	ULDV4	51.56	266.54	47.67	44.22	5.33		11.90				
	Local Channel - Dedicated - DS1 - Zone 1		1	ULDD1	ULDF1	36.49	216.65	183.54	24.30	16.95		11.90				
	Local Channel - Dedicated - DS1 - Zone 2		2	ULDD1	ULDF1	51.85	216.65	183.54	24.30	16.95		11.90				
	Local Channel - Dedicated - DS1 - Zone 3		3	ULDD1	ULDF1	92.00	216.65	183.54	24.30	16.95		11.90				
	Local Channel - Dedicated - DS3 - Per Mile per month			ULDD3	1L5NC	8.50										
	Local Channel - Dedicated - DS3 - Facility Termination			ULDD3	ULDF3	531.91	556.37	343.01	139.13	96.84		11.90				
	Local Channel - Dedicated - STS-1- Per Mile per month			ULDS1	1L5NC	8.50										
	Local Channel - Dedicated - STS-1 - Facility Termination			ULDS1	ULDFS	540.69	556.37	343.01	139.13	96.84		11.90				
DARK FIBER																
	Dark Fiber, Four Fiber Strands, Per Route Mile or Fraction Thereof per month - Local Channel			UDF	1L5DC	55.04										
	NRC Dark Fiber - Local Channel			UDF	UDFC4		751.34	193.88				11.90				
	Dark Fiber, Four Fiber Strands, Per Route Mile or Fraction Thereof per month - Interoffice Channel			UDF	1L5DF	26.85										
	NRC Dark Fiber - Interoffice Channel			UDF	UDF14		751.34	193.88				11.90				
	Dark Fiber, Four Fiber Strands, Per Route Mile or Fraction Thereof per month - Local Loop			UDF	1L5DL	55.04										
	NRC Dark Fiber - Local Loop			UDF	UDFL4		751.34	193.88				11.90				
8XX ACCESS TEN DIGIT SCREENING																
	8XX Access Ten Digit Screening, Per Call			OHD		0.0006252										
	8XX Access Ten Digit Screening, Reservation Charge Per 8XX Number Reserved			OHD	N8R1X		4.15	0.70				11.90				
	8XX Access Ten Digit Screening, Per 8XX No. Established W/O POTS Translations			OHD			8.78	1.18	5.77	0.70		11.90				
	8XX Access Ten Digit Screening, Per 8XX No. Established With POTS Translations			OHD	N8FTX		8.78	1.18	5.77	0.70		11.90				
	8XX Access Ten Digit Screening, Customized Area of Service Per 8XX Number			OHD	N8FCX		4.15	2.07				11.90				
	8XX Access Ten Digit Screening, Multiple InterLATA CXR Routing Per CXR Requested Per 8XX No.			OHD	N8FMX		4.85	2.78				11.90				
	8XX Access Ten Digit Screening, Change Charge Per Request			OHD	N8FAX		4.85	0.70				11.90				
	8XX Access Ten Digit Screening, Call Handling and Destination Features			OHD	N8FDX		4.15	4.15				11.90				
	8XX Access Ten Digit Screening, w/ 8FL No. Delivery, per query			OHD		0.0006252										
	8XX Access Ten Digit Screening, w/ POTS No. Delivery, per query			OHD		0.0006252										
LINE INFORMATION DATA BASE ACCESS (LIDB)																
	LIDB Common Transport Per Query			OQT		0.0000203										
	LIDB Validation Per Query			OQU		0.0136959										
	LIDB Originating Point Code Establishment or Change			OQT, OQU	NRPBX		55.13	55.13	55.13	55.13		11.90				
SIGNALING (CCS7)																

UNBUNDLED NETWORK ELEMENTS - Florida														Attachment: 2		Exhibit: B	
CATEGORY		RATE ELEMENTS	Interim	Zone	BCS	USOC	RATES ($)					Svc Order Submitted Elec per LSR	Svc Order Submitted Manually per LSR	Incremental Charge - Manual Svc Order vs. Electronic-1st	Incremental Charge - Manual Svc Order vs. Electronic-Add'l	Incremental Charge - Manual Svc Order vs. Electronic-Disc 1st	Incremental Charge - Manual Svc Order vs. Electronic-Disc Add'l
							Rec	Nonrecurring		Nonrecurring Disconnect		OSS Rates($)					
								First	Add'l	First	Add'l	SOMEC	SOMAN	SOMAN	SOMAN	SOMAN	SOMAN
		CCS7 Signaling Termination, Per STP Port			UDB	PT8SX	135.05										
		CCS7 Signaling Usage, Per TCAP Message			UDB		0.0000607										
		CCS7 Signaling Connection, Per link (A link)			UDB	TPP++	17.93	43.57	43.57	18.31	18.31		11.90				
		CCS7 Signaling Connection, Per link (B link) (also known as D link)			UDB	TPP++	17.93	43.57	43.57	18.31	18.31		11.90				
		CCS7 Signaling Usage, Per ISUP Message			UDB		0.0000152										
		CCS7 Signaling Usage Surrogate, per link per LATA			UDB	STU56	694.32										
		CCS7 Signaling Point Code, per Originating Point Code Establishment or Change, per STP affected			UDB	CCAPO		46.03	46.03	46.03	46.03		11.90				
E911 SERVICE																	
		Local Channel - Dedicated - 2-wr Voice Grade - Zone 1					21.94	265.84	46.97	37.63	4.00		11.90				
		Local Channel - Dedicated - 2-wr Voice Grade - Zone 2					29.62	265.84	46.97	37.63	4.00		11.90				
		Local Channel - Dedicated - 2-wr Voice Grade - Zone 3					57.22	265.84	46.97	37.63	4.00		11.90				
		Interoffice Transport - Dedicated - 2-wr Voice Grade Per Mile					0.0091										
		Interoffice Transport - Dedicated - 2-wr Voice Grade Per Facility Termination					25.32	47.35	31.78	18.31	7.03		11.90				
		Local Channel - Dedicated - DS1 - Zone 1					35.28	216.65	183.54	21.47	19.05		11.90				
		Local Channel - Dedicated - DS1 - Zone 2					47.63	216.65	183.54	21.47	19.05		11.90				
		Local Channel - Dedicated - DS1 - Zone 3					92.01	216.65	183.54	21.47	19.05		11.90				
		Interoffice Transport - Dedicated - DS1 Per Mile					0.1856										
		Interoffice Transport - Dedicated - DS1 Per Facility Termination					88.44	105.54	98.47	21.47	19.05		11.90				
CALLING NAME (CNAM) SERVICE																	
		CNAM For DB Owners - Service Establishment			OQV			25.35	25.35	19.01	19.01		11.90				
		CNAM For Non DB Owners - Service Establishment			OQV			25.35	25.35	19.01	19.01		11.90				
		CNAM For DB Owners - Service Provisioning With Point Code Establishment			OQV			1,592.00	1,177.00	352.36	259.09		11.90				
		CNAM For Non DB Owners - Service Provisioning With Point Code Establishment			OQV			546.51	393.82	358.06	259.09		11.90				
		CNAM for DB Owners, Per Query			OQV		0.001024										
		CNAM for Non DB Owners, Per Query			OQV		0.001024										
LNP Query Service																	
		LNP Charge Per query			OQV		0.000852										
		LNP Service Establishment Manual						13.83	13.83	12.71	12.71		11.90				
		LNP Service Provisioning with Point Code Establishment						655.50	334.88	297.03	218.40		11.90				
OPERATOR CALL PROCESSING																	
		Oper. Call Processing - Oper. Provided, Per Min. - Using BST LIDB					1.20										
		Oper. Call Processing - Oper. Provided, Per Min. - Using Foreign LIDB					1.24										
		Oper. Call Processing - Fully Automated, per Call - Using BST LIDB					0.20										
		Oper. Call Processing - Fully Automated, per Call - Using Foreign LIDB					0.20										
INWARD OPERATOR SERVICES																	
		Inward Operator Services - Verification, Per Call					1.00										
		Inward Operator Services - Verification and Emergency Interrupt - Per Call					1.95										
BRANDING - OPERATOR CALL PROCESSING																	
	Facility based CLEC																
		Recording of Custom Branded OA Announcement				CBAOS		7,000.00	7,000.00				11.90				
		Loading of Custom Branded OA Announcement per shelf/NAV per OCN				CBAOL		500.00	500.00				11.90				
	UNEP CLEC																
		Recording of Custom Branded OA Announcement						7,000.00	7,000.00				11.90				
		Loading of Custom Branded OA Announcement per shelf/NAV per OCN						500.00	500.00				11.90				
	Unbranding via OLNS for UNEP CLEC																
		Loading of OA per OCN (Regional)						1,200.00	1,200.00				11.90				

UNBUNDLED NETWORK ELEMENTS - Florida														Attachment: 2		Exhibit: B	
CATEGORY		RATE ELEMENTS	Interim	Zone	BCS	USOC	RATES ($)					Svc Order Submitted Elec per LSR	Svc Order Submitted Manually per LSR	Incremental Charge - Manual Svc Order vs. Electronic-1st	Incremental Charge - Manual Svc Order vs. Electronic-Add'l	Incremental Charge - Manual Svc Order vs. Electronic-Disc 1st	Incremental Charge - Manual Svc Order vs. Electronic-Disc Add'l
							Rec	Nonrecurring		Nonrecurring Disconnect		OSS Rates($)					
								First	Add'l	First	Add'l	SOMEC	SOMAN	SOMAN	SOMAN	SOMAN	SOMAN
DIRECTORY ASSISTANCE SERVICES																	
	DIRECTORY ASSISTANCE ACCESS SERVICE																
		Directory Assistance Access Service Calls, Charge Per Call					0.275										
	DIRECTORY ASSISTANCE CALL COMPLETION ACCESS SERVICE (DACC)																
		Directory Assistance Call Completion Access Service (DACC), Per Call Attempt					0.10										
DIRECTORY ASSISTANCE SERVICES																	
	DIRECTORY ASSISTANCE DATA BASE SERVICE (DADS)																
		Directory Assistance Data Base Service Charge Per Listing					0.04										
		Directory Assistance Data Base Service, per month				DBSOF	150.00										
BRANDING - DIRECTORY ASSISTANCE																	
	Facility Based CLEC																
		Recording and Provisioning of DA Custom Branded Announcement			AMT	CBADA		3,000.00	3,000.00				11.90				
		Loading of Custom Branded Announcement per Switch per OCN			AMT	CBADC		1,170.00	1,170.00				11.90				
	UNEP CLEC																
		Recording of DA Custom Branded Announcement						3,000.00	3,000.00				11.90				
		Loading of DA Custom Branded Announcement per Switch per OCN						1,170.00	1,170.00				11.90				
	Unbranding via OLNS for UNEP CLEC																
		Loading of DA per OCN (1 OCN per Order)						420.00	420.00				11.90				
		Loading of DA per Switch per OCN						16.00	16.00				11.90				
SELECTIVE ROUTING																	
		Selective Routing Per Unique Line Class Code Per Request Per Switch				USRCR		93.55	93.55	11.46	11.46		11.90				
VIRTUAL COLLOCATION																	
		Virtual Collocation-2 Wire Cross Connects (Loop) for Line Splitting			UEPSR, UEPSB	VE1LS	0.0502	11.57					11.90				
PHYSICAL COLLOCATION																	
		Physical Collocation-2 Wire Cross Connects (Loop) for Line Splitting			UEPSR, UEPSB	PE1LS	0.0276	8.22	7.22	5.74	4.58		11.90				
AIN SELECTIVE CARRIER ROUTING																	
		Regional Service Establishment			SRC	SRCEC		193,444.00		7,737.00			11.90				
		End Office Establishment			SRC	SRCEO		187.36	187.36	0.69	0.69		11.90				
		Query NRC, per query			SRC		0.0031868										
AIN - BELLSOUTH AIN SMS ACCESS SERVICE																	
		AIN SMS Access Service - Service Establishment, Per State, Initial Setup			A1N	CAMSE		43.56	43.56	44.93	44.93		11.90				
		AIN SMS Access Service - Port Connection - Dial/Shared Access			A1N	CAMDP		8.64	8.64	10.03	10.03		11.90				
		AIN SMS Access Service - Port Connection - ISDN Access			A1N	CAM1P		8.64	8.64	10.03	10.03		11.90				
		AIN SMS Access Service - User Identification Codes - Per User ID Code			A1N	CAMAU		38.66	38.66	29.88	29.88		11.90				
		AIN SMS Access Service - Security Card, Per User ID Code, Initial or Replacement			A1N	CAMRC		75.10	75.10	12.93	12.93		11.90				
		AIN SMS Access Service - Storage, Per Unit (100 Kilobytes)					0.0028										
		AIN SMS Access Service - Session, Per Minute					0.7809										
		AIN SMS Access Service - Company Performed Session, Per Minute					0.4609										
AIN - BELLSOUTH AIN TOOLKIT SERVICE																	
		AIN Toolkit Service - Service Establishment Charge, Per State, Initial Setup			CAM	BAPSC		43.56	43.56	44.93	44.93		11.90				
		AIN Toolkit Service - Training Session, Per Customer				BAPVX		8,439.00	8,439.00				11.90				
		AIN Toolkit Service - Trigger Access Charge, Per Trigger, Per DN, Term. Attempt				BAPTT		8.64	8.64	10.03	10.03		11.90				
		AIN Toolkit Service - Trigger Access Charge, Per Trigger, Per DN, Off-Hook Delay				BAPTD		8.64	8.64	10.03	10.03		11.90				

UNBUNDLED NETWORK ELEMENTS - Florida														Attachment: 2		Exhibit: B	
CATEGORY		RATE ELEMENTS	Interim	Zone	BCS	USOC	RATES ($)					Svc Order Submitted Elec per LSR	Svc Order Submitted Manually per LSR	Incremental Charge - Manual Svc Order vs. Electronic-1st	Incremental Charge - Manual Svc Order vs. Electronic-Add'l	Incremental Charge - Manual Svc Order vs. Electronic-Disc 1st	Incremental Charge - Manual Svc Order vs. Electronic-Disc Add'l
							Rec	Nonrecurring		Nonrecurring Disconnect				OSS Rates($)			
								First	Add'l	First	Add'l	SOMEC	SOMAN	SOMAN	SOMAN	SOMAN	SOMAN
		AIN Toolkit Service - Trigger Access Charge, Per Trigger, Per DN, Off-Hook Immediate				BAPTM		8.64	8.64	10.03	10.03		11.90				
		AIN Toolkit Service - Trigger Access Charge, Per Trigger, Per DN, 10-Digit PODP				BAPTO		38.06	38.06	15.86	15.86		11.90				
		AIN Toolkit Service - Trigger Access Charge, Per Trigger, Per DN, CDP				BAPTC		38.06	38.06	15.86	15.86		11.90				
		AIN Toolkit Service - Trigger Access Charge, Per Trigger, Per DN, Feature Code				BAPTF		38.06	38.06	15.86	15.86		11.90				
		AIN Toolkit Service - Query Charge, Per Query					0.0535927										
		AIN Toolkit Service - Type 1 Node Charge, Per AIN Toolkit Subscription, Per Node, Per Query					0.0063698										
		AIN Toolkit Service - SCP Storage Charge, Per SMS Access Account, Per 100 Kilobytes					0.06										
		AIN Toolkit Service - Monthly report - Per AIN Toolkit Service Subscription			CAM	BAPMS	8.34	8.64	8.64	6.08	6.08		11.90				
		AIN Toolkit Service - Special Study - Per AIN Toolkit Service Subscription			CAM	BAPLS	3.73	9.56	9.56				11.90				
		AIN Toolkit Service - Call Event Report - Per AIN Toolkit Service Subscription			CAM	BAPDS	4.73	8.64	8.64	6.08	6.08		11.90				
		AIN Toolkit Service - Call Event Special Study - Per AIN Toolkit Service Subscription			CAM	BAPES	0.12	9.56	9.56				11.90				
ENHANCED EXTENDED LINK (EELs)																	
	NOTE: The monthly recurring and non-recurring charges below will apply and the Switch-As-Is Charge will not apply for EELs provisioned as ' Ordinarily Combined' Network Elements.																
	NOTE: The monthly recurring and the Switch-As-Is Charge and not the non-recurring charges below will apply for EELs provisioned as ' Currently Combined' Network Elements.																
	NOTE: Minimum billing is one month for DS1 and below and three months above DS1 services.																
	2-WIRE VOICE GRADE EXTENDED LOOP WITH DEDICATED DS1 INTEROFFICE TRANSPORT (EEL)																
		First 2-Wire VG Loop(SL2) in a DS1 Interofficed Transport Combination - Zone 1		1	UNCVX	UEAL2	12.24	127.59	60.54	42.79	2.81		11.90				
		First 2-Wire VG Grade Loop(SL2) in a DS1 Interofficed Transport Combination - Zone 2		2	UNCVX	UEAL2	17.40	127.59	60.54	42.79	2.81		11.90				
		First 2-Wire VG Grade Loop(SL2) in a DS1 Interofficed Transport Combination - Zone 3		3	UNCVX	UEAL2	30.87	127.59	60.54	42.79	2.81		11.90				
		Interoffice Transport - Dedicated - DS1 combination - Per Mile per month			UNC1X	1L5XX	0.1856										
		Interoffice Transport - Dedicated - DS1 combination - Facility Termination per month			UNC1X	U1TF1	88.44	174.46	122.46	45.61	17.95		11.90				
		DS1 Channelization System Per Month			UNC1X	MQ1	146.77	51.83	10.75				11.90				
		Voice Grade COCI - DS1 To Ds0 Interface - Per Month			UNCVX	1D1VG	1.38	12.16	8.77	6.71	4.84		11.90				
		Each Additional 2-Wire VG Loop(SL 2) in the same DS1 Interoffice Transport Combination - Zone 1		1	UNCVX	UEAL2	12.24	127.59	60.54	42.79	2.81		11.90				
		Each Additional 2-Wire VG Loop(SL2) in the same DS1 Interoffice Transport Combination - Zone 2		2	UNCVX	UEAL2	17.40	127.59	60.54	42.79	2.81		11.90				
		Each Additional 2-Wire VG Loop(SL2) in the same DS1 Interoffice Transport Combination - Zone 3		3	UNCVX	UEAL2	30.87	127.59	60.54	42.79	2.81		11.90				
		Voice Grade COCI - DS1 to DS0 Channel System combination - per month			UNCVX	1D1VG	1.38	12.16	8.77	6.71	4.84		11.90				
		Nonrecurring Currently Combined Network Elements Switch -As-Is Charge			UNC1X	UNCCC		8.98	8.98	8.98	8.98		11.90				
	4-WIRE VOICE GRADE EXTENDED LOOP WITH DEDICATED DS1 INTEROFFICE TRANSPORT (EEL)																
		First 4-Wire Analog Voice Grade Loop in a DS1 Interoffice Transport Combination - Zone 1		1	UNCVX	UEAL4	18.89	127.59	60.54	42.79	2.81		11.90				
		First 4-Wire Analog Voice Grade Loop in a DS1 Interoffice Transport Combination - Zone 2		2	UNCVX	UEAL4	26.84	127.59	60.54	42.79	2.81		11.90				
		First 4-Wire Analog Voice Grade Loop in a DS1 Interoffice Transport Combination - Zone 3		3	UNCVX	UEAL4	47.62	127.59	60.54	42.79	2.81		11.90				
		Interoffice Transport - Dedicated - DS1 combination - Per Mile Per Month			UNC1X	1L5XX	0.1856										
		Interoffice Transport - Dedicated - DS1 - Facility Termination Per Month			UNC1X	U1TF1	88.44	174.46	122.46	45.61	17.95		11.90				

CATEGORY		RATE ELEMENTS	Interim	Zone	BCS	USOC	RATES ($)					Svc Order Submitted Elec per LSR	Svc Order Submitted Manually per LSR	Attachment: 2 Incremental Charge - Manual Svc Order vs. Electronic-1st	Attachment: 2 Incremental Charge - Manual Svc Order vs. Electronic-Add'l	Exhibit: B Incremental Charge - Manual Svc Order vs. Electronic-Disc 1st	Exhibit: B Incremental Charge - Manual Svc Order vs. Electronic-Disc Add'l
							Rec	Nonrecurring		Nonrecurring Disconnect		OSS Rates($)					
								First	Add'l	First	Add'l	SOMEC	SOMAN	SOMAN	SOMAN	SOMAN	SOMAN
		Channelization - Channel System DS1 to DS0 combination Per Month			UNC1X	MQ1	146.77	51.83	10.75				11.90				
		Voice Grade COCI - DS1 to DS0 Channel System combination - per month			UNCVX	1D1VG	1.38	12.16	8.77	6.71	4.84		11.90				
		Additional 4-Wire Analog Voice Grade Loop in same DS1 Interoffice Transport Combination - Zone 1		1	UNCVX	UEAL4	18.89	127.59	60.54	42.79	2.81		11.90				
		Additional 4-Wire Analog Voice Grade Loop in same DS1 Interoffice Transport Combination - Zone 2		2	UNCVX	UEAL4	26.84	127.59	60.54	42.79	2.81		11.90				
		Additional 4-Wire Analog Voice Grade Loop in same DS1 Interoffice Transport Combination - Zone 3		3	UNCVX	UEAL4	47.62	127.59	60.54	42.79	2.81		11.90				
		Voice Grade COCI - DS1 to DS0 Channel System combination - per month			UNCVX	1D1VG	1.38	12.16	8.77	6.71	4.84		11.90				
		Nonrecurring Currently Combined Network Elements Switch -As-Is Charge			UNC1X	UNCCC		8.98	8.98	8.98	8.98		11.90				
	4-WIRE 56 KBPS EXTENDED DIGITAL LOOP WITH DEDICATED DS1 INTEROFFICE TRANSPORT (EEL)																
		First 4-Wire 56Kbps Digital Grade Loop in a DS1 Interoffice Transport Combination - Zone 1		1	UNCDX	UDL56	22.20	127.59	60.54	42.79	2.81		11.90				
		First 4-wire 56Kbps Digital Grade Loop in a DS1 Interoffice Transport Combination - Zone 2		2	UNCDX	UDL56	31.56	127.59	60.54	42.79	2.81		11.90				
		First 4-Wire 56Kbps Digital Grade Loop in a DS1 Interoffice Transport Combination - Zone 3		3	UNCDX	UDL56	55.99	127.59	60.54	42.79	2.81		11.90				
		Interoffice Transport - Dedicated - DS1 combination - Per Mile Per Month			UNC1X	1L5XX	0.1856										
		Interoffice Transport - Dedicated - DS1 - combination Facility Termination Per Month			UNC1X	U1TF1	88.44	174.46	122.46	45.61	17.95		11.90				
		Channelization - Channel System DS1 to DS0 combination Per Month			UNC1X	MQ1	146.77	51.83	10.75				11.90				
		OCU-DP COCI (data) - DS1 to DS0 Channel System - per month (2.4-64kbs)			UNCDX	1D1DD	2.10	12.16	8.77	6.71	4.84		11.90				
		Additional 4-Wire 56Kbps Digital Grade Loopin same DS1 Interoffice Transport Combination - Zone 1		1	UNCDX	UDL56	22.20	127.59	60.54	42.79	2.81		11.90				
		Additional 4-Wire 56Kbps Digital Grade Loopin same DS1 Interoffice Transport Combination - Zone 2		2	UNCDX	UDL56	31.56	127.59	60.54	42.79	2.81		11.90				
		Additional 4-Wire 56Kbps Digital Grade Loopin same DS1 Interoffice Transport Combination - Zone 3		3	UNCDX	UDL56	55.99	127.59	60.54	42.79	2.81		11.90				
		OCU-DP COCI (data) - DS1 to DS0 Channel System - combination per month (2.4-64kbs)			UNCDX	1D1DD	2.10	12.16	8.77	6.71	4.84		11.90				
		Nonrecurring Currently Combined Network Elements Switch -As-Is Charge			UNC1X	UNCCC		8.98	8.98	8.98	8.98		11.90				
	4-WIRE 64 KBPS EXTENDED DIGITAL LOOP WITH DEDICATED DS1 INTEROFFICE TRANSPORT (EEL)																
		First 4-Wire 64Kbps Digital Grade Loop in a DS1 Interoffice Transport Combination - Zone 1		1	UNCDX	UDL64	22.20	127.59	60.54	42.79	2.81		11.90				
		First 4-Wire 64Kbps Digital Grade Loop in a DS1 Interoffice Transport Combination - Zone 2		2	UNCDX	UDL64	31.56	127.59	60.54	42.79	2.81		11.90				
		First 4-Wire 64Kbps Digital Grade Loop in a DS1 Interoffice Transport Combination - Zone 3		3	UNCDX	UDL64	55.99	127.59	60.54	42.79	2.81		11.90				
		Interoffice Transport - Dedicated - DS1 combination - Per Mile Per Month			UNC1X	1L5XX	0.1856										
		Interoffice Transport - Dedicated - DS1 combination - Facility Termination Per Month			UNC1X	U1TF1	88.44	174.46	122.46	45.61	17.95		11.90				
		Channelization - Channel System DS1 to DS0 combination Per Month			UNC1X	MQ1	146.77	51.83	10.75				11.90				
		OCU-DP COCI (data) - DS1 to DS0 Channel System combination - per month (2.4-64kbs)			UNCDX	1D1DD	2.10	12.16	8.77	6.71	4.84		11.90				
		Additional 4-Wire 64Kbps Digital Grade Loopin same DS1 Interoffice Transport Combination - Zone 1		1	UNCDX	UDL64	22.20	127.59	60.54	42.79	2.81		11.90				
		Additional 4-Wire 64Kbps Digital Grade Loopin same DS1 Interoffice Transport Combination - Zone 2		2	UNCDX	UDL64	31.56	127.59	60.54	42.79	2.81		11.90				

CATEGORY		RATE ELEMENTS	Interim	Zone	BCS	USOC	RATES ($)					Svc Order Submitted Elec per LSR	Svc Order Submitted Manually per LSR	Attachment: 2 Incremental Charge - Manual Svc Order vs. Electronic-1st	Attachment: 2 Incremental Charge - Manual Svc Order vs. Electronic-Add'l	Exhibit: B Incremental Charge - Manual Svc Order vs. Electronic-Disc 1st	Exhibit: B Incremental Charge - Manual Svc Order vs. Electronic-Disc Add'l
							Rec	Nonrecurring		Nonrecurring Disconnect		OSS Rates($)					
								First	Add'l	First	Add'l	SOMEC	SOMAN	SOMAN	SOMAN	SOMAN	SOMAN
		Additional 4-Wire 64Kbps Digital Grade Loopin same DS1 Interoffice Transport Combination - Zone 3		3	UNCDX	UDL64	55.99	127.59	60.54	42.79	2.81		11.90				
		OCU-DP COCI (data) - DS1 to DS0 Channel System combination - per month (2.4-64kbs)			UNCDX	1D1DD	2.10	12.16	8.77	6.71	4.84		11.90				
		Nonrecurring Currently Combined Network Elements Switch -As-Is Charge			UNC1X	UNCCC		8.98	8.98	8.98	8.98		11.90				
	4-WIRE DS1 DIGITAL EXTENDED LOOP WITH DEDICATED DS1 INTEROFFICE TRANSPORT (EEL)																
		4-Wire DS1 Digital Loop in Combination with DS1 Interoffice Transport - Zone 1		1	UNC1X	USLXX	70.74	217.75	121.62	51.44	14.45		11.90				
		4-Wire DS1 Digital Loop in Combination with DS1 Interoffice Transport - Zone 2		2	UNC1X	USLXX	100.54	217.75	121.62	51.44	14.45		11.90				
		4-Wire DS1 Digital Loop in Combination with DS1 Interoffice Transport - Zone 3		3	UNC1X	USLXX	178.39	217.75	121.62	51.44	14.45		11.90				
		Interoffice Transport - Dedicated - DS1 combination - Per Mile Per Month			UNC1X	1L5XX	0.1856										
		Interoffice Transport - Dedicated - DS1 combination - Facility Termination Per Month			UNC1X	U1TF1	88.44	174.46	122.46	45.61	17.95		11.90				
		Nonrecurring Currently Combined Network Elements Switch -As-Is Charge			UNC1X	UNCCC		8.98	8.98	8.98	8.98		11.90				
	4-WIRE DS1 DIGITAL EXTENDED LOOP WITH DEDICATED DS3 INTEROFFICE TRANSPORT (EEL)																
		First DS1Loop in DS3 Interoffice Transport Combination - Zone 1		1	UNC1X	USLXX	70.74	217.75	121.62	51.44	14.45		11.90				
		First DS1Loop in DS3 Interoffice Transport Combination - Zone 2		2	UNC1X	USLXX	100.54	217.75	121.62	51.44	14.45		11.90				
		First DS1Loop in DS3 Interoffice Transport Combination - Zone 3		3	UNC1X	USLXX	178.39	217.75	121.62	51.44	14.45		11.90				
		Interoffice Transport - Dedicated - DS3 combination - Per Mile Per Month			UNC3X	1L5XX	3.87										
		Interoffice Transport - Dedicated - DS3 - Facility Termination per month			UNC3X	U1TF3	1,071.00	314.45	130.88	38.60	18.23		11.90				
		DS3 to DS1 Channel System combination per month			UNC3X	MQ3	211.19	115.60	59.93	5.45	0.00		11.90				
		DS3 Interface Unit (DS1 COCI) combination per month			UNC1X	UC1D1	13.76	12.16	8.77	6.71	4.84		11.90				
		Additional DS1Loop in DS3 Interoffice Transport Combination - Zone 1		1	UNC1X	USLXX	70.74	217.75	121.62	51.44	14.45		11.90				
		Additional DS1Loop in DS3 Interoffice Transport Combination - Zone 2		2	UNC1X	USLXX	100.54	217.75	121.62	51.44	14.45		11.90				
		Additional DS1Loop in DS3 Interoffice Transport Combination - Zone 3		3	UNC1X	USLXX	178.39	217.75	121.62	51.44	14.45		11.90				
		DS3 Interface Unit (DS1 COCI) combination per month			UNC1X	UC1D1	13.76	12.16	8.77	6.71	4.84		11.90				
		Nonrecurring Currently Combined Network Elements Switch -As-Is Charge			UNC3X	UNCCC		8.98	8.98	8.98	8.98		11.90				
	2-WIRE VOICE GRADE EXTENDED LOOP/ 2 WIRE VOICE GRADE INTEROFFICE TRANSPORT (EEL)																
		2-WireVG Loop used with 2-wire VG Interoffice Transport Combination - Zone 1		1	UNCVX	UEAL2	12.24	127.59	60.54	42.79	2.81		11.90				
		2-WireVG Loop used with 2-wire VG Interoffice Transport Combination - Zone 2		2	UNCVX	UEAL2	17.40	127.59	60.54	42.79	2.81		11.90				
		2-WireVG Loop used with 2-wire VG Interoffice Transport Combination - Zone 3		3	UNCVX	UEAL2	30.87	127.59	60.54	42.79	2.81		11.90				
		Interoffice Transport - Dedicated - 2-wire VG combination - Per Mile Per Month			UNCVX	1L5XX	0.0091										
		Interoffice Transport - Dedicated - 2- Wire Voice Grade combination - Facility Termination per month			UNCVX	U1TV2	25.32	94.70	52.59	50.49	21.53		11.90				
		Nonrecurring Currently Combined Network Elements Switch -As-Is Charge			UNCVX	UNCCC		8.98	8.98	8.98	8.98		11.90				
	4-WIRE VOICE GRADE EXTENDED LOOP/ 4 WIRE VOICE GRADE INTEROFFICE TRANSPORT (EEL)																
		4-WireVG Loop used with 4-wire VG Interoffice Transport Combination - Zone 1		1	UNCVX	UEAL4	18.89	127.59	60.54	42.79	2.81		11.90				
		4-WireVG Loop used with 4-wire VG Interoffice Transport Combination - Zone 2		2	UNCVX	UEAL4	26.84	127.59	60.54	42.79	2.81		11.90				

CATEGORY	RATE ELEMENTS	Interim	Zone	BCS	USOC	RATES ($)					Svc Order Submitted Elec per LSR	Svc Order Submitted Manually per LSR	Attachment: 2 Incremental Charge - Manual Svc Order vs. Electronic-1st	Attachment: 2 Incremental Charge - Manual Svc Order vs. Electronic-Add'l	Exhibit: B Incremental Charge - Manual Svc Order vs. Electronic-Disc 1st	Exhibit: B Incremental Charge - Manual Svc Order vs. Electronic-Disc Add'l
						Rec	Nonrecurring		Nonrecurring Disconnect				OSS Rates($)			
							First	Add'l	First	Add'l	SOMEC	SOMAN	SOMAN	SOMAN	SOMAN	SOMAN
	4-WireVG Loop used with 4-wire VG Interoffice Transport Combination - Zone 3		3	UNCVX	UEAL4	47.62	127.59	60.54	42.79	2.81		11.90				
	Interoffice Transport - Dedicated - 4-wire VG combination - Per Mile Per Month			UNCVX	1L5XX	0.0091										
	Interoffice Transport - Dedicated - 4- Wire Voice Grade combination - Facility Termination per month			UNCVX	U1TV4	22.58	94.70	52.59	50.49	21.53		11.90				
	Nonrecurring Currently Combined Network Elements Switch -As-Is Charge			UNCVX	UNCCC		8.98	8.98	8.98	8.98		11.90				
	DS3 DIGITAL EXTENDED LOOP WITH DEDICATED DS3 INTEROFFICE TRANSPORT (EEL)															
	High Capacity Unbundled Local Loop - DS3 combination - Per Mile per month			UNC3X	1L5ND	10.92										
	High Capacity Unbundled Local Loop - DS3 combination - Facility Termination per month			UNC3X	UE3PX	386.88	249.97	162.05	67.10	26.82		11.90				
	Interoffice Transport - Dedicated - DS3 - Per Mile per month			UNC3X	1L5XX	3.87										
	Interoffice Transport - Dedicated - DS3 combination - Facility Termination per per month			UNC3X	U1TF3	1,071.00	314.45	130.88	38.60	18.23		11.90				
	Nonrecurring Currently Combined Network Elements Switch -As-Is Charge			UNC3X	UNCCC		8.98	8.98	8.98	8.98		11.90				
	STS1 DIGITAL EXTENDED LOOP WITH DEDICATED STS1 INTEROFFICE TRANSPORT (EEL)															
	High Capacity Unbundled Local Loop - STS1 combination - Per Mile per month			UNCSX	1L5ND	10.92										
	High Capacity Unbundled Local Loop - STS1 combination - Facility Termination per month			UNCSX	UDLS1	426.60	249.97	162.05	67.10	26.82		11.90				
	Interoffice Transport - Dedicated - STS1 combination - Per Mile per month			UNCSX	1L5XX	3.87										
	Interoffice Transport - Dedicated - STS1 combination - Facility Termination per month			UNCSX	U1TFS	1,056.00	314.45	130.88	38.60	18.23		11.90				
	Nonrecurring Currently Combined Network Elements Switch -As-Is Charge			UNCSX	UNCCC		8.98	8.98	8.98	8.98		11.90				
	2-WIRE ISDN EXTENDED LOOP WITH DS1 INTEROFFICE TRANSPORT (EEL)															
	First 2-Wire ISDN Loop in a DS1 Interoffice Combination Transport - Zone 1		1	UNCNX	U1L2X	19.28	127.59	60.60	42.79	2.81		11.90				
	First 2-Wire ISDN Loop in a DS1 Interoffice Combination Transport - Zone 2		2	UNCNX	U1L2X	27.40	127.59	60.60	42.79	2.81		11.90				
	First 2-Wire ISDN Loop in a DS1 Interoffice Combination Transport - Zone 3		3	UNCNX	U1L2X	48.62	127.59	60.60	42.79	2.81		11.90				
	Interoffice Transport - Dedicated - DS1 combination - Per Mile			UNC1X	1L5XX	0.1856										
	Interoffice Transport - Dedicated - DS1 combintion - Facility Termination per month			UNC1X	U1TF1	88.44	174.46	122.46	45.61	17.95		11.90				
	Channelization - Channel System DS1 to DS0 combination - per month			UNC1X	MQ1	146.77	51.83	10.75				11.90				
	2-wire ISDN COCI (BRITE) - DS1 to DS0 Channel System combination - per month			UNCNX	UC1CA	3.66	12.16	8.77	6.71	4.84		11.90				
	Additional 2-wire ISDN Loop in same DS1Interoffice Transport Combination - Zone 1		1	UNCNX	U1L2X	19.28	127.59	60.60	42.79	2.81		11.90				
	Additional 2-wire ISDN Loop in same DS1Interoffice Transport Combination - Zone 2		2	UNCNX	U1L2X	27.40	127.59	60.60	42.79	2.81		11.90				
	Additional 2-wire ISDN Loop in same DS1Interoffice Transport Combination - Zone 3		3	UNCNX	U1L2X	48.62	127.59	60.60	42.79	2.81		11.90				
	2-wire ISDN COCI (BRITE) - DS1 to DS0 Channel System combintaion- per month			UNCNX	UC1CA	3.66	12.16	8.77	6.71	4.84		11.90				
	Nonrecurring Currently Combined Network Elements Switch -As-Is Charge			UNC1X	UNCCC		8.98	8.98	8.98	8.98		11.90				
	4-WIRE DS1 DIGITAL EXTENDED LOOP WITH DEDICATED STS-1 INTEROFFICE TRANSPORT (EEL)															
	First DS1 Loop in STS1 Interoffice Transport Combination - Zone 1		1	UNC1X	USLXX	70.74	217.75	121.62	51.44	14.45		11.90				
	First DS1 Loop in STS1 Interoffice Transport Combination - Zone 2		2	UNC1X	USLXX	100.54	217.75	121.62	51.44	14.45		11.90				

CATEGORY	RATE ELEMENTS	Interim	Zone	BCS	USOC	RATES ($) Rec	Nonrecurring First	Nonrecurring Add'l	Nonrecurring Disconnect First	Nonrecurring Disconnect Add'l	Svc Order Submitted Elec per LSR	Svc Order Submitted Manually per LSR	Attachment: 2 Incremental Charge - Manual Svc Order vs. Electronic-1st	Attachment: 2 Incremental Charge - Manual Svc Order vs. Electronic-Add'l	Exhibit: B Incremental Charge - Manual Svc Order vs. Electronic-Disc 1st	Exhibit: B Incremental Charge - Manual Svc Order vs. Electronic-Disc Add'l
											OSS Rates($)					
											SOMEC	SOMAN	SOMAN	SOMAN	SOMAN	SOMAN
	First DS1 Loop in STS1 Interoffice Transport Combination - Zone 3		3	UNC1X	USLXX	178.39	217.75	121.62	51.44	14.45		11.90				
	Interoffice Transport - Dedicated - STS1 combination - Per Mile Per Month			UNCSX	1L5XX	3.87										
	Interoffice Transport - Dedicated - STS1 combination - Facility Termination			UNCSX	U1TFS	1,056.00	314.45	130.88	38.60	18.23		11.90				
	STS1 to DS1 Channel System conbination per month			UNCSX	MQ3	211.19	20.06	31.66	5.45	0.00		11.90				
	DS3 Interface Unit (DS1 COCI) combination per month			UNC1X	UC1D1	13.76	12.16	8.77	6.71	4.84						
	Additional DS1Loop in STS1 Interoffice Transport Combination - Zone 1		1	UNC1X	USLXX	70.74	217.75	121.62	51.44	14.45		11.90				
	Additional DS1Loop in STS1 Interoffice Transport Combination - Zone 2		2	UNC1X	USLXX	100.54	217.75	121.62	51.44	14.45		11.90				
	Additional DS1Loop in STS1 Interoffice Transport Combination - Zone 3		3	UNC1X	USLXX	178.39	217.75	121.62	51.44	14.45		11.90				
	DS3 Interface Unit (DS1 COCI) combination per month			UNC1X	UC1D1	13.76	12.16	8.77	6.71	4.84		11.90				
	Nonrecurring Currently Combined Network Elements Switch -As-Is Charge			UNCSX	UNCCC		8.98	8.98	8.98	8.98		11.90				
4-WIRE 56 KBPS DIGITAL EXTENDED LOOP WITH 56 KBPS INTEROFFICE TRANSPORT (EEL)																
	4-wire 56 kbps Loop/4-wire 56 kbps Interoffice Transport Combination - Zone 1		1	UNCDX	UDL56	22.20	127.59	60.54	42.79	2.81		11.90				
	4-wire 56 kbps Loop/4-wire 56 kbps Interoffice Transport Combination - Zone 2		2	UNCDX	UDL56	31.56	127.59	60.54	42.79	2.81		11.90				
	4-wire 56 kbps Loop/4-wire 56 kbps Interoffice Transport Combination - Zone 3		3	UNCDX	UDL56	55.99	127.59	60.54	42.79	2.81		11.90				
	Interoffice Transport - Dedicated - 4-wire 56 kbps combination - Per Mile			UNCDX	1L5XX	0.0091										
	Interoffice Transport - Dedicated - 4-wire 56 kbps combination - Facility Termination			UNCDX	U1TD5	18.44	94.70	52.59	50.49	21.53		11.90				
	Nonrecurring Currently Combined Network Elements Switch -As-Is Charge			UNCDX	UNCCC		8.98	8.98	8.98	8.98		11.90				
4-WIRE 64 KBPS DIGITAL EXTENDED LOOP WITH 64 KBPS INTEROFFICE TRANSPORT (EEL)																
	4-wire 64 kbps Loop/4-wire 64 kbps Interoffice Transport Combination - Zone 1		1	UNCDX	UDL64	22.20	127.59	60.54	42.79	2.81		11.90				
	4-wire 64 kbps Loop/4-wire 64 kbps Interoffice Transport Combination - Zone 2		2	UNCDX	UDL64	31.56	127.59	60.54	42.79	2.81		11.90				
	4-wire 64 kbps Loop/4-wire 64 kbps Interoffice Transport Combination - Zone 3		3	UNCDX	UDL64	55.99	127.59	60.54	42.79	2.81		11.90				
	Interoffice Transport - Dedicated - 4-wire 64 kbps combination - Per Mile			UNCDX	1L5XX	0.0091										
	Interoffice Transport - Dedicated - 4-wire 64 kbps combination - Facility Termination			UNCDX	U1TD6	18.44	94.70	52.59	50.49	21.53		11.90				
	Nonrecurring Currently Combined Network Elements Switch -As-Is Charge			UNCDX	UNCCC		8.98	8.98	8.98	8.98		11.90				
ADDITIONAL NETWORK ELEMENTS																
	When used as a part of a currently combined facility, the non-recurrng charges do not apply, but a Switch As Is charge does apply.															
	When used as ordinarily combined network elements in All States, the non-recurring charges apply and the Switch As Is Charge does not.															
	Nonrecurring Currently Combined Network Elements "Switch As Is" Charge (One applies to each combination)															
	Nonrecurring Currently Combined Network Elements Switch -As-Is Charge - 2 wire/4-Wire VG			UNCVX	UNCCC		8.98	8.98	8.98	8.98		11.90				
	Nonrecurring Currently Combined Network Elements Switch -As-Is Charge - 56/64 kbps			UNCDX	UNCCC		8.98	8.98	8.98	8.98		11.90				
	Nonrecurring Currently Combined Network Elements Switch -As-Is Charge - DS1			UNC1X	UNCCC		8.98	8.98	8.98	8.98		11.90				
	Nonrecurring Currently Combined Network Elements Switch -As-Is Charge - DS3			UNC3X	UNCCC		8.98	8.98	8.98	8.98		11.90				
	Nonrecurring Currently Combined Network Elements Switch -As-Is Charge - STS1			UNCSX	UNCCC		8.98	8.98	8.98	8.98		11.90				
	NOTE: Local Channel - Dedicated Transport - minimum billing period - Below DS3=one month, DS3 and above=four months															
	Local Channel - Dedicated - 2-Wire Voice Grade Zone 1		1	UNCVX	ULDV2	19.66	265.84	46.97	37.63	4.00		11.90				

UNBUNDLED NETWORK ELEMENTS - Florida

CATEGORY	RATE ELEMENTS	Interim	Zone	BCS	USOC	RATES ($)					Svc Order Submitted Elec per LSR	Svc Order Submitted Manually per LSR	Attachment: 2		Exhibit: B	
													Incremental Charge - Manual Svc Order vs. Electronic-1st	Incremental Charge - Manual Svc Order vs. Electronic-Add'l	Incremental Charge - Manual Svc Order vs. Electronic-Disc 1st	Incremental Charge - Manual Svc Order vs. Electronic-Disc Add'l
						Rec	Nonrecurring		Nonrecurring Disconnect		OSS Rates($)					
							First	Add'l	First	Add'l	SOMEC	SOMAN	SOMAN	SOMAN	SOMAN	SOMAN
	Local Channel - Dedicated - 2-Wire Voice Grade Zone 2		2	UNCVX	ULDV2	27.94	265.84	46.97	37.63	4.00		11.90				
	Local Channel - Dedicated - 2-Wire Voice Grade Zone 3		3	UNCVX	ULDV2	49.58	265.84	46.97	37.63	4.00		11.90				
	Local Channel - Dedicated - 4-Wire Voice Grade Zone 1		1	UNCVX	ULDV4	20.45	266.54	47.67	44.22	5.33		11.90				
	Local Channel - Dedicated - 4-Wire Voice Grade Zone 2		2	UNCVX	ULDV4	29.06	266.54	47.67	44.22	5.33		11.90				
	Local Channel - Dedicated - 4-Wire Voice Grade Zone3		3	UNCVX	ULDV4	51.56	266.54	47.67	44.22	5.33		11.90				
	Local Channel - Dedicated - DS1 per month Zone 1		1	UNC1X	ULDF1	36.49	216.65	183.54	24.30	16.95		11.90				
	Local Channel - Dedicated -DS1 Per Month Zone 2		2	UNC1X	ULDF1	51.85	216.65	183.54	24.30	16.95		11.90				
	Local Channel - Dedicated - DS1- Per Month Zone 3		3	UNC1X	ULDF1	92.00	216.65	183.54	24.30	16.95		11.90				
	Local Channel - Dedicated - DS3 - Per Mile per month			UNC3X	1L5NC	8.50										
	Local Channel - Dedicated - DS3 - Facility Termination			UNC3X	ULDF3	531.91	556.37	343.01	139.13	96.84		11.90				
	Local Channel - Dedicated - STS-1- Per Mile per month			UNCSX	1L5NC	8.50										
	Local Channel - Dedicated - STS-1 - Facility Termination			UNCSX	ULDFS	540.69	556.37	343.01	139.13	96.84		11.90				
	Optional Features & Functions:															
	Clear Channel Capability (SF/ESF) Option - Subsequent Activity - per DS1	I		ULDD1, U1TD1, UNC1X, USL	NRCCC		65.01					11.90				
	C-bit Parity Option - Subsequent Activity - per DS3	i		U1TD3, ULDD3, UE3, UNC3X	NRCC3		50.01					11.90				
	MULTIPLEXERS															
	NOTE: minimum billing period is one month for DS1 to DS0 Channel System and interfaces															
	NOTE: minimum billing period is three months for DS3 to DS1 Channel System and interfaces															
	DS1 to DS0 Channel System (with the higher-level connected to a collocation in the same SWC) per month			UXTD1	MQ1	146.77	101.42	71.62	11.09	10.49		11.90				
	DS1 to DS0 Channel System (used to channelize a DS1 Local Channel) per month			ULDD1	MQ1	146.77	101.42	71.62	11.09	10.49		11.90				
	DS1 to DS0 Channel System (used to channelize a DS1 Interoffice Channel) per month			U1TD1	MQ1	146.77	101.42	71.62	11.09	10.49		11.90				
	OCU-DP COCI (data) - DS1 to DS0 Channel System - per month (2.4-64kbs) used for a Local Loop			UDL	1D1DD	2.10	10.07	7.08				11.90				
	OCU-DP COCI (data) - DS1 to DS0 Channel System - per month (2.4-64kbs) used for connection to a channelized DS1 Local Channel in the same SWC as collocation			U1TUD	1D1DD	2.10	10.07	7.08				11.90				
	2-wire ISDN COCI (BRITE) - DS1 to DS0 Channel Systsem - per month for a Local Loop			UDN	UC1CA	3.66	10.07	7.08				11.90				
	2-wire ISDN COCI (BRITE) - DS1 to DS0 Channel Systsem - per month used for connection to a channelized DS1 Local Channel in the same SWC as collocation			U1TUB	UC1CA	3.66	10.07	7.08				11.90				
	Voice Grade COCI - DS1 to DS0 Channel System - per month used for a Local Loop			UEA	1D1VG	1.38	10.07	7.08				11.90				
	Voice Grade COCI - DS1 to DS0 Channel System - per month used for connection to a channelized DS1 Local Channel in the same SWC as collocation			U1TUC	1D1VG	1.38	10.07	7.08				11.90				
	DS3 to DS1 Channel System (with the higher level connected to a collocation in the same SWC) per month			UXTD3	MQ3	211.19	199.28	118.64	40.34	39.07		11.90				
	DS3 to DS1 Channel System (used to channelize a DS3 Local Channel) per month			ULDD3	MQ3	211.19	199.28	118.64	40.34	39.07		11.90				
	DS3 to DS1 Channel System (used to channelize a DS3 Interoffice Channel per month			U1TD3	MQ3	211.19	199.28	118.64	40.34	39.07		11.90				
	STS-1 to DS1 Channel System (with the higher level connected to a collocation in the same SWC) per month			UXTS1	MQ3	211.19	199.28	118.64	40.34	39.07		11.90				
	STS-1 to DS1 Channel System (used to channelize a STS-1 Local Channel) per month			ULDS1	MQ3	211.19	199.28	118.64	40.34	39.07		11.90				
	STS-1 to DS1 Channel System (used to channelize a STS-1 Interoffice Channel) per month			U1TS1	MQ3	211.19	199.28	118.64	40.34	39.07		11.90				
	DS1 COCI used with Loop per month			USL	UC1D1	13.76	10.07	7.08				11.90				
	DS1 COCI (used for connection to a channelized DS1 Local Channel in the same SWC as collocation) per month			U1TUA	UC1D1	13.76	10.07	7.08				11.90				
	DS1 COCI used with Interoffice Channel per month			U1TD1	UC1D1	13.76	10.07	7.08				11.90				
	Sub-Loop Feeder															
	Unbundled Sub-Loop Feeder Loop, 4-Wire DS1 - Zone 1		1	UNC1X	USBFG	42.59	133.77	78.02	85.16	21.21						

CATEGORY	RATE ELEMENTS	Interim	Zone	BCS	USOC	RATES ($)					Svc Order Submitted Elec per LSR	Svc Order Submitted Manually per LSR	Attachment: 2 Incremental Charge - Manual Svc Order vs. Electronic-1st	Attachment: 2 Incremental Charge - Manual Svc Order vs. Electronic-Add'l	Exhibit: B Incremental Charge - Manual Svc Order vs. Electronic-Disc 1st	Exhibit: B Incremental Charge - Manual Svc Order vs. Electronic-Disc Add'l
						Rec	Nonrecurring		Nonrecurring Disconnect				OSS Rates($)			
							First	Add'l	First	Add'l	SOMEC	SOMAN	SOMAN	SOMAN	SOMAN	SOMAN
	Unbundled Sub-Loop Feeder Loop, 4-Wire DS1 - Zone 2		2	UNC1X	USBFG	60.53	133.77	78.02	85.16	21.21						
	Unbundled Sub-Loop Feeder Loop, 4-Wire DS1 - Zone 3		3	UNC1X	USBFG	107.39	133.77	78.02	85.16	21.21						
UNBUNDLED LOCAL EXCHANGE SWITCHING(PORTS)																
Exchange Ports																
NOTE: Although the Port Rate includes all available features in GA, KY, LA & TN, the desired features will need to be ordered using retail USOCs																
2-WIRE VOICE GRADE LINE PORT RATES (RES)																
	Exchange Ports - 2-Wire Analog Line Port- Res.			UEPSR	UEPRL	1.40	3.74	3.63	1.88	1.80		11.90				
	Exchange Ports - 2-Wire Analog Line Port with Caller ID - Res.			UEPSR	UEPRC	1.40	3.74	3.63	1.88	1.80		11.90				
	Exchange Ports - 2-Wire Analog Line Port outgoing only - Res.			UEPSR	UEPRO	1.40	3.74	3.63	1.88	1.80		11.90				
	Exchange Ports - 2-Wire VG unbundled Florida area calling with Caller ID - Res.			UEPSR	UEPAF	1.40	3.74	3.63	1.88	1.80		11.90				
	Exchange Ports - 2-Wire VG unbundled Florida Residence Area Calling Plan, without Caller ID capability			UEPSR	UEPA9	1.40	3.74	3.63	1.88	1.80		11.90				
	Exchange Ports - 2-Wire VG unbundled Florida extended dialing port for use with CREX7 and Caller ID			UEPSR	UEPA1	1.40	3.74	3.63	1.88	1.80		11.90				
	Exchange Ports - 2-Wire VG unbundled Florida extended dialing port for use with CREX7, without Caller ID capability			UEPSR	UEPA8	1.40	3.74	3.63	1.88	1.80		11.90				
	Exchange Ports - 2-Wire VG unbundled res, low usage line port with Caller ID (LUM)			UEPSR	UEPAP	1.40	3.74	3.63	1.88	1.80		11.90				
	2-Wire voice unbundled Low Usage Line Port without Caller ID Capability			UEPSR	UEPRT	1.40	3.74	3.63	1.88	1.80		11.90				
	Subsequent Activity			UEPSR	USASC	0.00	0.00	0.00				11.90				
FEATURES																
	All Available Vertical Features			UEPSR	UEPVF	2.26	0.00	0.00				11.90				
2-WIRE VOICE GRADE LINE PORT RATES (BUS)																
	Exchange Ports - 2-Wire Analog Line Port without Caller ID - Bus			UEPSB	UEPBL	1.40	3.74	3.63	1.88	1.80		11.90				
	Exchange Ports - 2-Wire VG unbundled Line Port with unbundled port with Caller+E484 ID - Bus.			UEPSB	UEPBC	1.40	3.74	3.63	1.88	1.80		11.90				
	Exchange Ports - 2-Wire Analog Line Port outgoing only - Bus.			UEPSB	UEPBO	1.40	3.74	3.63	1.88	1.80		11.90				
	Exhange Ports - 2-Wire VG unbundled incoming only port with Caller ID - Bus			UEPSB	UEPB1	1.40	3.74	3.63	1.88	1.80		11.90				
	2-Wire voice unbundled Incoming Only Port without Caller ID Capability			UEPSB	UEPBE	1.40	3.74	3.63	1.88	1.80		11.90				
	Subsequent Activity			UEPSB	USASC	0.00	0.00	0.00				11.90				
FEATURES																
	All Available Vertical Features			UEPSB	UEPVF	2.26	0.00	0.00				11.90				
EXCHANGE PORT RATES (DID & PBX)																
	2-Wire VG Unbundled 2-Way PBX Trunk - Res			UEPSE	UEPRD	1.40	39.06	18.18	12.35	0.7187		11.90				
	2-Wire VG Line Side Unbundled 2-Way PBX Trunk - Bus			UEPSP	UEPPC	1.40	39.06	18.18	12.35	0.7187		11.90				
	2-Wire VG Line Side Unbundled Outward PBX Trunk - Bus			UEPSP	UEPPO	1.40	39.06	18.18	12.35	0.7187		11.90				
	2-Wire VG Line Side Unbundled Incoming PBX Trunk - Bus			UEPSP	UEPP1	1.40	39.06	18.18	12.35	0.7187		11.90				
	2-Wire Analog Long Distance Terminal PBX Trunk - Bus			UEPSP	UEPLD	1.40	39.06	18.18	12.35	0.7187		11.90				
	2-Wire Voice Unbundled PBX LD Terminal Ports			UEPSP	UEPLD	1.40	39.06	18.18	12.35	0.7187		11.90				
	2-Wire Vice Unbundled 2-Way PBX Usage Port			UEPSP	UEPXA	1.40	39.06	18.18	12.35	0.7187		11.90				
	2-Wire Voice Unbundled PBX Toll Terminal Hotel Ports			UEPSP	UEPXB	1.40	39.06	18.18	12.35	0.7187		11.90				
	2-Wire Voice Unbundled PBX LD DDD Terminals Port			UEPSP	UEPXC	1.40	39.06	18.18	12.35	0.7187		11.90				
	2-Wire Voice Unbundled PBX LD Terminal Switchboard Port			UEPSP	UEPXD	1.40	39.06	18.18	12.35	0.7187		11.90				
	2-Wire Voice Unbundled PBX LD Terminal Switchboard IDD Capable Port			UEPSP	UEPXE	1.40	39.06	18.18	12.35	0.7187		11.90				
	2-Wire Voice Unbundled 2-Way PBX Hotel/Hospital Economy Administrative Calling Port			UEPSP	UEPXL	1.40	39.06	18.18	12.35	0.7187		11.90				
	2-Wire Voice Unbundled 2-Way PBX Hotel/Hospital Economy Room Calling Port			UEPSP	UEPXM	1.40	39.06	18.18	12.35	0.7187		11.90				
	2-Wire Voice Unbundled 1-Way Outgoing PBX Hotel/Hospital Discount Room Calling Port			UEPSP	UEPXO	1.40	39.06	18.18	12.35	0.7187		11.90				

CATEGORY	RATE ELEMENTS	Interim	Zone	BCS	USOC	RATES ($)					Svc Order Submitted Elec per LSR	Svc Order Submitted Manually per LSR	Attachment: 2 Incremental Charge - Manual Svc Order vs. Electronic-1st	Incremental Charge - Manual Svc Order vs. Electronic-Add'l	Exhibit: B Incremental Charge - Manual Svc Order vs. Electronic-Disc 1st	Incremental Charge - Manual Svc Order vs. Electronic-Disc Add'l
						Rec	Nonrecurring		Nonrecurring Disconnect		OSS Rates($)					
							First	Add'l	First	Add'l	SOMEC	SOMAN	SOMAN	SOMAN	SOMAN	SOMAN
	2-Wire Voice Unbundled 1-Way Outgoing PBX Measured Port			UEPSP	UEPXS	1.40	39.06	18.18	12.35	0.7187		11.90				
	Subsequent Activity			UEPSP	USASC	0.00	0.00	0.00				11.90				
FEATURES																
	All Available Vertical Features			UEPSP UEPSE	UEPVF	2.26	0.00	0.00				11.90				
EXCHANGE PORT RATES (COIN)																
	Exchange Ports - Coin Port					1.40	3.74	3.63	1.88	1.80		11.90				
NOTE: Transmission/usage charges associated with POTS circuit switched usage will also apply to circuit switched voice and/or circuit switched data transmission by B-Channels associated with 2-wire ISDN ports.																
NOTE: Access to B Channel or D Channel Packet capabilities will be available only through BFR/New Business Request Process. Rates for the packet capabilities will be determined via the Bona Fide Request/New Business Request Process.																
UNBUNDLED LOCAL EXCHANGE SWITCHING(PORTS)																
EXCHANGE PORT RATES																
	Exchange Ports - 2-Wire DID Port			UEPEX	UEPP2	8.73	78.41	15.82	41.94	4.26		11.90			1.83	
	Exchange Ports - DDITS Port - 4-Wire DS1 Port with DID capability			UEPDD	UEPDD	54.95	151.11	77.75	48.81	3.10		11.90			1.83	
	Exchange Ports - 2-Wire ISDN Port (See Notes below.)			UEPTX UEPSX	U1PMA	8.83	46.83	50.68	27.64	11.93		11.90			1.83	
	All Features Offered			UEPTX UEPSX	UEPVF	2.26	0.00	0.00				11.90			1.83	
NOTE: Transmission/usage charges associated with POTS circuit switched usage will also apply to circuit switched voice and/or circuit switched data transmission by B-Channels associated with 2-wire ISDN ports.																
NOTE: Access to B Channel or D Channel Packet capabilities will be available only through BFR/New Business Request Process. Rates for the packet capabilities will be determined via the Bona Fide Request/New Business Request Process.																
	Exchange Ports - 2-Wire ISDN Port -- Channel Profiles			UEPTX UEPSX	U1UMA	0.00	0.00	0.00								
	Exchange Ports - 4-Wire ISDN DS1 Port			UEPEX	UEPEX	82.74	174.61	95.17	49.80	18.23		11.90			1.83	
UNBUNDLED PORT with REMOTE CALL FORWARDING CAPABILITY																
UNBUNDLED REMOTE CALL FORWARDING SERVICE - RESIDENCE																
	Unbundled Remote Call Forwarding Service, Area Calling, Res			UEPVR	UERAC	1.40	3.74	3.63	1.88	1.80		11.90				
	Unbundled Remote Call Forwarding Service, Local Calling - Res			UEPVR	UERLC	1.40	3.74	3.63	1.88	1.80		11.90				
	Unbundled Remote Call Forwarding Service, InterLATA - Res			UEPVR	UERTE	1.40	3.74	3.63	1.88	1.80		11.90				
	Unbundled Remote Call Forwarding Service, IntraLATA - Res			UEPVR	UERTR	1.40	3.74	3.63	1.88	1.80		11.90				
Non-Recurring																
	Unbundled Remote Call Forwarding Service - Conversion - Switch-as-is			UEPVR	USAC2		0.102	0.102				11.90				
	Unbundled Remote Call Forwarding Service - Conversion with allowed change (PIC and LPIC)			UEPVR	USACC		0.102	0.102								
UNBUNDLED REMOTE CALL FORWARDING - Bus																
	Unbundled Remote Call Forwarding Service, Area Calling - Bus			UEPVB	UERAC	1.40	3.74	3.63	1.88	1.80		11.90				
	Unbundled Remote Call Forwarding Service, Local Calling - Bus			UEPVB	UERLC	1.40	3.74	3.63	1.88	1.80		11.90				
	Unbundled Remote Call Forwarding Service, InterLATA - Bus			UEPVB	UERTE	1.40	3.74	3.63	1.88	1.80		11.90				
	Unbundled Remote Call Forwarding Service, IntraLATA - Bus			UEPVB	UERTR	1.40	3.74	3.63	1.88	1.80		11.90				
	Unbundled Remote Call Forwarding Service Expanded and Exception Local Calling			UEPVB	UERVJ	1.40	3.74	3.63	1.88	1.80		11.90				
Non-Recurring																
	Unbundled Remote Call Forwarding Service - Conversion - Switch-as-is			UEPVB	USAC2		0.102	0.102				11.90				
	Unbundled Remote Call Forwarding Service - Conversion with allowed change (PIC and LPIC)			UEPVB	USACC		0.102	0.102								
UNBUNDLED LOCAL SWITCHING, PORT USAGE																
End Office Switching (Port Usage)																
	End Office Switching Function, Per MOU					0.0007662										
	End Office Trunk Port - Shared, Per MOU					0.000164										
Tandem Switching (Port Usage) (Local or Access Tandem)																
	Tandem Switching Function Per MOU					0.0001319										
	Tandem Trunk Port - Shared, Per MOU					0.000235										
Common Transport																
	Common Transport - Per Mile, Per MOU					0.0000035										
	Common Transport - Facilities Termination Per MOU					0.0004372										
UNBUNDLED PORT/LOOP COMBINATIONS - COST BASED RATES																
Cost Based Rates are applied where BellSouth is required by FCC and/or State Commission rule to provide Unbundled Local Switching or Switch Ports.																
Features shall apply to the Unbundled Port/Loop Combination - Cost Based Rate section in the same manner as they are applied to the Stand-Alone Unbundled Port section of this Rate Exhibit.																
End Office and Tandem Switching Usage and Common Transport Usage rates in the Port section of this rate exhibit shall apply to all combinations of loop/port network elements except for UNE Coin Port/Loop Combinations.																

UNBUNDLED NETWORK ELEMENTS - Florida													Attachment: 2		Exhibit: B	
CATEGORY	RATE ELEMENTS	Interim	Zone	BCS	USOC	RATES ($)					Svc Order Submitted Elec per LSR	Svc Order Submitted Manually per LSR	Incremental Charge - Manual Svc Order vs. Electronic-1st	Incremental Charge - Manual Svc Order vs. Electronic-Add'l	Incremental Charge - Manual Svc Order vs. Electronic-Disc 1st	Incremental Charge - Manual Svc Order vs. Electronic-Disc Add'l
						Rec	Nonrecurring		Nonrecurring Disconnect		OSS Rates($)					
							First	Add'l	First	Add'l	SOMEC	SOMAN	SOMAN	SOMAN	SOMAN	SOMAN
The first and additional Port nonrecurring charges apply to Not Currently Combined Combos. For Currently Combined Combos the nonrecurring charges shall be those identified in the Nonrecurring - Currently Combined sections.																
2-WIRE VOICE GRADE LOOP WITH 2-WIRE LINE PORT (RES)																
UNE Port/Loop Combination Rates																
	2-Wire VG Loop/Port Combo - Zone 1		1			10.94										
	2-Wire VG Loop/Port Combo - Zone 2		2			15.05										
	2-Wire VG Loop/Port Combo - Zone 3		3			25.80										
UNE Loop Rates																
	2-Wire Voice Grade Loop (SL1) - Zone 1		1	UEPRX	UEPLX	9.77										
	2-Wire Voice Grade Loop (SL1) - Zone 2		2	UEPRX	UEPLX	13.88										
	2-Wire Voice Grade Loop (SL1) - Zone 3		3	UEPRX	UEPLX	24.63										
2-Wire Voice Grade Line Port Rates (Res)																
	2-Wire voice unbundled port - residence			UEPRX	UEPRL	1.17	53.31	26.46	27.50	8.37		11.90				
	2-Wire voice unbundled port with Caller ID - res			UEPRX	UEPRC	1.17	53.31	26.46	27.50	8.37		11.90				
	2-Wire voice unbundled port outgoing only - res			UEPRX	UEPRO	1.17	53.31	26.46	27.50	8.37		11.90				
	2-Wire voice unbundled Florida Area Calling with Caller ID - res			UEPRX	UEPAF	1.17	53.31	26.46	27.50	8.37		11.90				
	2-Wire voice unbundles res, low usage line port with Caller ID (LUM)			UEPRX	UEPAP	1.17	53.31	26.46	27.50	8.37		11.90				
	2-Wire voice unbundled Florida extended dialing port for use with CREX7 and Caller ID			UEPRX	UEPA1	1.17	53.31	26.46	27.50	8.37		11.90				
	2-Wire voice unbundled Florida extended dialing port for use with CREX7, without Caller ID capability			UEPRX	UEPA8	1.17	53.31	26.46	27.50	8.37		11.90				
	2-Wire voice unbundled Florida Area Calling Port without Caller ID Capability			UEPRX	UEPA9	1.17	53.31	26.46	27.50	8.37		11.90				
	2-Wire voice unbundled Low Usage Line Port without Caller ID Capability			UEPRX	UEPRT	1.17	53.31	26.46	27.50	8.37		11.90				
FEATURES																
	All Features Offered			UEPRX	UEPVF	2.26	0.00	0.00				11.90				
LOCAL NUMBER PORTABILITY																
	Local Number Portability (1 per port)			UEPRX	LNPCX	0.35										
NONRECURRING CHARGES (NRCs) - CURRENTLY COMBINED																
	2-Wire Voice Grade Loop / Line Port Combination - Conversion - Switch-as-is			UEPRX	USAC2		0.102	0.102				11.90				
	2-Wire Voice Grade Loop / Line Port Combination - Conversion - Switch with change			UEPRX	USACC		0.102	0.102				11.90				
ADDITIONAL NRCs																
	2-Wire Voice Grade Loop/Line Port Combination - Subsequent Activity			UEPRX	USAS2	0.00	0.00	0.00				11.90				
2-WIRE VOICE GRADE LOOP WITH 2-WIRE LINE PORT (BUS)																
UNE Port/Loop Combination Rates																
	2-Wire VG Loop/Port Combo - Zone 1		1			10.94										
	2-Wire VG Loop/Port Combo - Zone 2		2			15.05										
	2-Wire VG Loop/Port Combo - Zone 3		3			25.80										
UNE Loop Rates																
	2-Wire Voice Grade Loop (SL1) - Zone 1		1	UEPBX	UEPLX	9.77										
	2-Wire Voice Grade Loop (SL1) - Zone 2		2	UEPBX	UEPLX	13.88										
	2-Wire Voice Grade Loop (SL1) - Zone 3		3	UEPBX	UEPLX	24.63										
2-Wire Voice Grade Line Port (Bus)																
	2-Wire voice unbundled port without Caller ID - bus			UEPBX	UEPBL	1.17	53.31	26.46	27.50	8.37		11.90				
	2-Wire voice unbundled port with Caller + E484 ID - bus			UEPBX	UEPBC	1.17	53.31	26.46	27.50	8.37		11.90				
	2-Wire voice unbundled port outgoing only - bus			UEPBX	UEPBO	1.17	53.31	26.46	27.50	8.37		11.90				
	2-Wire voice unbundled incoming only port with Caller ID - Bus			UEPBX	UEPB1	1.17	53.31	26.46	27.50	8.37		11.90				
	2-Wire voice unbundled Incoming Only Port without Caller ID Capability			UEPBX	UEPBE	1.17	53.31	26.46	27.50	8.37		11.90				
LOCAL NUMBER PORTABILITY																
	Local Number Portability (1 per port)			UEPBX	LNPCX	0.35										
FEATURES																
	All Features Offered			UEPBX	UEPVF	2.26	0.00	0.00				11.90				
NONRECURRING CHARGES (NRCs) - CURRENTLY COMBINED																

CATEGORY	RATE ELEMENTS	Interim	Zone	BCS	USOC	RATES ($)					Svc Order Submitted Elec per LSR	Svc Order Submitted Manually per LSR	Attachment: 2 Incremental Charge - Manual Svc Order vs. Electronic-1st	Attachment: 2 Incremental Charge - Manual Svc Order vs. Electronic-Add'l	Exhibit: B Incremental Charge - Manual Svc Order vs. Electronic-Disc 1st	Exhibit: B Incremental Charge - Manual Svc Order vs. Electronic-Disc Add'l
						Rec	Nonrecurring		Nonrecurring Disconnect		OSS Rates($)					
							First	Add'l	First	Add'l	SOMEC	SOMAN	SOMAN	SOMAN	SOMAN	SOMAN
	2-Wire Voice Grade Loop / Line Port Combination - Conversion - Switch-as-is			UEPBX	USAC2		0.102	0.102				11.90				
	2-Wire Voice Grade Loop / Line Port Combination - Conversion - Switch with change			UEPBX	USACC		0.102	0.102				11.90				
ADDITIONAL NRCs																
	2-Wire Voice Grade Loop/Line Port Combination - Subsequent Activity			UEPBX	USAS2		0.00	0.00				11.90				
2-WIRE VOICE GRADE LOOP WITH 2-WIRE LINE PORT (RES - PBX)																
UNE Port/Loop Combination Rates																
	2-Wire VG Loop/Port Combo - Zone 1		1			10.94										
	2-Wire VG Loop/Port Combo - Zone 2		2			15.05										
	2-Wire VG Loop/Port Combo - Zone 3		3			25.80										
UNE Loop Rates																
	2-Wire Voice Grade Loop (SL 1) - Zone 1		1	UEPRG	UEPLX	9.77										
	2-Wire Voice Grade Loop (SL 1) - Zone 2		2	UEPRG	UEPLX	13.88										
	2-Wire Voice Grade Loop (SL 1) - Zone 3		3	UEPRG	UEPLX	24.63										
2-Wire Voice Grade Line Port Rates (RES - PBX)																
	2-Wire VG Unbundled Combination 2-Way PBX Trunk Port - Res			UEPRG	UEPRD	1.17	174.81	100.65	75.88	12.73		11.90				
LOCAL NUMBER PORTABILITY																
	Local Number Portability (1 per port)			UEPRG	LNPCP	3.15	0.00	0.00				11.90				
FEATURES																
	All Features Offered			UEPRG	UEPVF	2.26	0.00	0.00				11.90				
NONRECURRING CHARGES (NRCs) - CURRENTLY COMBINED																
	2-Wire Voice Grade Loop/ Line Port Combination (PBX) - Conversion - Switch-As-Is			UEPRG	USAC2		8.45	1.91				11.90				
	2-Wire Voice Grade Loop/ Line Port Combination (PBX) - Conversion - Switch with Change			UEPRG	USACC		8.45	1.91				11.90				
ADDITIONAL NRCs																
	2-Wire Voice Grade Loop/ Line Port Combination (PBX) - Subsequent Activity			UEPRG	USAS2	0.00	0.00	0.00				11.90				
	PBX Subsequent Activity - Change/Rearrange Multiline Hunt Group						7.86	7.86				11.90				
2-WIRE VOICE GRADE LOOP WITH 2-WIRE LINE PORT (BUS - PBX)																
UNE Port/Loop Combination Rates																
	2-Wire VG Loop/Port Combo - Zone 1		1			10.94										
	2-Wire VG Loop/Port Combo - Zone 2		2			15.05										
	2-Wire VG Loop/Port Combo - Zone 3		3			25.80										
UNE Loop Rates																
	2-Wire Voice Grade Loop (SL 1) - Zone 1		1	UEPPX	UEPLX	9.77										
	2-Wire Voice Grade Loop (SL 1) - Zone 2		2	UEPPX	UEPLX	13.88										
	2-Wire Voice Grade Loop (SL 1) - Zone 3		3	UEPPX	UEPLX	24.63										
2-Wire Voice Grade Line Port Rates (BUS - PBX)																
	Line Side Unbundled Combination 2-Way PBX Trunk Port - Bus			UEPPX	UEPPC	1.17	174.81	100.65	75.88	12.73		11.90				
	Line Side Unbundled Outward PBX Trunk Port - Bus			UEPPX	UEPPO	1.17	174.81	100.65	75.88	12.73		11.90				
	Line Side Unbundled Incoming PBX Trunk Port - Bus			UEPPX	UEPP1	1.17	174.81	100.65	75.88	12.73		11.90				
	2-Wire Voice Unbundled PBX LD Terminal Ports			UEPPX	UEPLD	1.17	174.81	100.65	75.88	12.73		11.90				
	2-Wire Voice Unbundled 2-Way Combination PBX Usage Port			UEPPX	UEPXA	1.17	174.81	100.65	75.88	12.73		11.90				
	2-Wire Voice Unbundled PBX Toll Terminal Hotel Ports			UEPPX	UEPXB	1.17	174.81	100.65	75.88	12.73		11.90				
	2-Wire Voice Unbundled PBX LD DDD Terminals Port			UEPPX	UEPXC	1.17	174.81	100.65	75.88	12.73		11.90				
	2-Wire Voice Unbundled PBX LD Terminal Switchboard Port			UEPPX	UEPXD	1.17	174.81	100.65	75.88	12.73		11.90				
	2-Wire Voice Unbundled PBX LD Terminal Switchboard IDD Capable Port			UEPPX	UEPXE	1.17	174.81	100.65	75.88	12.73		11.90				
	2-Wire Voice Unbundled 2-Way PBX Hotel/Hospital Economy Administrative Calling Port			UEPPX	UEPXL	1.17	174.81	100.65	75.88	12.73		11.90				
	2-Wire Voice Unbundled 2-Way PBX Hotel/Hospital Economy Room Calling Port			UEPPX	UEPXM	1.17	174.81	100.65	75.88	12.73		11.90				

CATEGORY	RATE ELEMENTS	Interim	Zone	BCS	USOC	RATES ($)					Svc Order Submitted Elec per LSR	Svc Order Submitted Manually per LSR	Attachment: 2 Incremental Charge - Manual Svc Order vs. Electronic-1st	Attachment: 2 Incremental Charge - Manual Svc Order vs. Electronic-Add'l	Exhibit: B Incremental Charge - Manual Svc Order vs. Electronic-Disc 1st	Exhibit: B Incremental Charge - Manual Svc Order vs. Electronic-Disc Add'l
						Rec	Nonrecurring		Nonrecurring Disconnect				OSS Rates($)			
							First	Add'l	First	Add'l	SOMEC	SOMAN	SOMAN	SOMAN	SOMAN	SOMAN
	2-Wire Voice Unbundled 1-Way Outgoing PBX Hotel/Hospital Discount Room Calling Port			UEPPX	UEPXO	1.17	174.81	100.65	75.88	12.73		11.90				
	2-Wire Voice Unbundled 1-Way Outgoing PBX Measured Port			UEPPX	UEPXS	1.17	174.81	100.65	75.88	12.73		11.90				
LOCAL NUMBER PORTABILITY																
	Local Number Portability (1 per port)			UEPPX	LNPCP	3.15	0.00	0.00				11.90				
FEATURES																
	All Features Offered			UEPPX	UEPVF	2.26	0.00	0.00				11.90				
NONRECURRING CHARGES (NRCs) - CURRENTLY COMBINED																
	2-Wire Voice Grade Loop/ Line Port Combination (PBX) - Conversion - Switch-As-Is			UEPPX	USAC2		8.45	1.91				11.90				
	2-Wire Voice Grade Loop/ Line Port Combination (PBX) - Conversion - Switch with Change			UEPPX	USACC		8.45	1.91				11.90				
ADDITIONAL NRCs																
	2-Wire Voice Grade Loop/ Line Port Combination (PBX) - Subsequent Activity			UEPPX	USAS2	0.00	0.00	0.00				11.90				
	PBX Subsequent Activity - Change/Rearrange Multiline Hunt Group						7.86	7.86				11.90				
2-WIRE VOICE GRADE LOOP WITH 2-WIRE ANALOG LINE COIN PORT																
UNE Port/Loop Combination Rates																
	2-Wire VG Coin Port/Loop Combo – Zone 1		1			10.94										
	2-Wire VG Coin Port/Loop Combo – Zone 2		2			15.05										
	2-Wire VG Coin Port/Loop Combo – Zone 3		3			25.80										
UNE Loop Rates																
	2-Wire Voice Grade Loop (SL1) - Zone 1		1	UEPCO	UEPLX	9.77										
	2-Wire Voice Grade Loop (SL1) - Zone 2		2	UEPCO	UEPLX	13.88										
	2-Wire Voice Grade Loop (SL1) - Zone 3		3	UEPCO	UEPLX	24.63										
2-Wire Voice Grade Line Ports (COIN)																
	2-Wire Coin 2-Way with Operator Screening and Blocking: 011, 900/976, 1+DDD (FL)			UEPCO	UEP2F	1.17	53.31	26.46	27.50	8.37		11.90				
	2-Wire Coin 2-Way with Operator Screening and 011 Blocking (FL)			UEPCO	UEPFA	1.17	53.31	26.46	27.50	8.37		11.90				
	2-Wire Coin 2-Way with Operator Screening and Blocking: 900/976, 1+DDD, 011+, and Local (FL)			UEPCO	UEPCG	1.17	53.31	26.46	27.50	8.37		11.90				
	2-Wire Coin Outward with Operator Screening and 011 Blocking (AL, FL)			UEPCO	UEPRK	1.17	53.31	26.46	27.50	8.37		11.90				
	2-Wire Coin Outward with Operator Screening and Blocking: 900/976, 1+DDD, 011+ (FL)			UEPCO	UEPOF	1.17	53.31	26.46	27.50	8.37		11.90				
	2-Wire Coin Outward with Operator Screening and Blocking: 900/976, 1+DDD, 011+, and Local (FL, GA)			UEPCO	UEPCQ	1.17	53.31	26.46	27.50	8.37		11.90				
	2-Wire 2-Way Smartline with 900/976 (all states except LA)			UEPCO	UEPCK	1.17	53.31	26.46	27.50	8.37		11.90				
	2-Wire Coin Outward Smartline with 900/976 (all states except LA)			UEPCO	UEPCR	1.17	53.31	26.46	27.50	8.37		11.90				
ADDITIONAL UNE COIN PORT/LOOP (RC)																
	UNE Coin Port/Loop Combo Usage (Flat Rate)			UEPCO	URECU	1.86	0.00	0.00	0.00	0.00		11.90				
LOCAL NUMBER PORTABILITY																
	Local Number Portability (1 per port)			UEPCO	LNPCX	0.35										
NONRECURRING CHARGES - CURRENTLY COMBINED																
	2-Wire Voice Grade Loop / Line Port Combination - Conversion - Switch-as-is			UEPCO	USAC2		0.102	0.102				11.90				
	2-Wire Voice Grade Loop / Line Port Combination - Conversion - Switch with change			UEPCO	USACC		0.102	0.102				11.90				
ADDITIONAL NRCs																
	2-Wire Voice Grade Loop/Line Port Combination - Subsequent Activity			UEPCO	USAS2		0.00	0.00				11.90				
2-WIRE VOICE LOOP/ 2WIRE VOICE GRADE IO TRANSPORT/ 2-WIRE LINE PORT (RES)																
UNE Port/Loop Combination Rates																
	2-Wire VG Loop/IO Tranport/Port Combo - Zone 1		1			13.64										
	2-Wire VG Loop/IO Tranport/Port Combo - Zone 2		2			18.80										
	2-Wire VG Loop/IO Tranport/Port Combo - Zone 3		3			32.27										

UNBUNDLED NETWORK ELEMENTS - Florida														Attachment: 2		Exhibit: B	
CATEGORY	RATE ELEMENTS	Interim	Zone	BCS	USOC	RATES ($)					Svc Order Submitted Elec per LSR	Svc Order Submitted Manually per LSR	Incremental Charge - Manual Svc Order vs. Electronic-1st	Incremental Charge - Manual Svc Order vs. Electronic-Add'l	Incremental Charge - Manual Svc Order vs. Electronic-Disc 1st	Incremental Charge - Manual Svc Order vs. Electronic-Disc Add'l
						Rec	Nonrecurring		Nonrecurring Disconnect		OSS Rates($)					
							First	Add'l	First	Add'l	SOMEC	SOMAN	SOMAN	SOMAN	SOMAN	SOMAN
UNE Loop Rates																
	2-Wire Voice Grade Loop (SL2) - Zone 1		1	UEPFR	UECF2	12.24										
	2-Wire Voice Grade Loop (SL2) - Zone 2		2	UEPFR	UECF2	17.40										
	2-Wire Voice Grade Loop (SL2) - Zone 3		3	UEPFR	UECF2	30.87										
2-Wire Voice Grade Line Port Rates (Res)																
	2-Wire voice unbundled port - residence			UEPFR	UEPRL	1.40	174.81	100.65	75.88	12.73		11.90				
	2-Wire voice unbundled port with Caller ID - res			UEPFR	UEPRC	1.40	174.81	100.65	75.88	12.73		11.90				
	2-Wire voice unbundled port outgoing only - res			UEPFR	UEPRO	1.40	174.81	100.65	75.88	12.73		11.90				
	2-Wire voice unbundled Florida Area Calling with Caller ID - res			UEPFR	UEPAF	1.40	174.81	100.65	75.88	12.73		11.90				
	2-Wire voice unbundles res, low usage line port with Caller ID (LUM)			UEPFR	UEPAP	1.40	174.81	100.65	75.88	12.73		11.90				
INTEROFFICE TRANSPORT																
	Interoffice Transport - Dedicated - 2 Wire Voice Grade - Facility Termination			UEPFR	U1TV2	25.32	47.35	31.78								
	Interoffice Transport - Dedicated - 2 Wire Voice Grade - Per Mile or Fraction Mile			UEPFR	1L5XX	0.0091										
FEATURES																
	All Features Offered			UEPFR	UEPVF	2.26	0.00	0.00				11.90				
LOCAL NUMBER PORTABILITY																
	Local Number Portability (1 per port)			UEPFR	LNPCX	0.35										
NONRECURRING CHARGES (NRCs) - CURRENTLY COMBINED																
	2-Wire Loop / Dedicated IO Transport / 2 Wire Line Port Combination - Conversion - Switch-as-is			UEPFR	USAC2		16.97	3.73				11.90				
	2-Wire Loop / Dedicated IO Transport / 2 Wire Line Port Combination - Conversion - Switch-With-Change			UEPFR	USACC		16.97	3.73				11.90				
2-WIRE VOICE LOOP/ 2WIRE VOICE GRADE IO TRANSPORT/ 2-WIRE LINE PORT (BUS)																
UNE Port/Loop Combination Rates																
	2-Wire VG Loop/IO Tranport/Port Combo - Zone 1		1			13.64										
	2-Wire VG Loop/IO Tranport/Port Combo - Zone 2		2			18.80										
	2-Wire VG Loop/IO Tranport/Port Combo - Zone 3		3			32.27										
UNE Loop Rates																
	2-Wire Voice Grade Loop (SL2) - Zone 1		1	UEPFB	UECF2	12.24										
	2-Wire Voice Grade Loop (SL2) - Zone 2		2	UEPFB	UECF2	17.40										
	2-Wire Voice Grade Loop (SL2) - Zone 3		3	UEPFB	UECF2	30.87										
2-Wire Voice Grade Line Port (Bus)																
	2-Wire voice unbundled port without Caller ID - bus			UEPFB	UEPBL	1.40	174.81	100.65	75.88	12.73		11.90				
	2-Wire voice unbundled port with Caller + E484 ID - bus			UEPFB	UEPBC	1.40	174.81	100.65	75.88	12.73		11.90				
	2-Wire voice unbundled port outgoing only - bus			UEPFB	UEPBO	1.40	174.81	100.65	75.88	12.73		11.90				
	2-Wire voice unbundled incoming only port with Caller ID - Bus			UEPFB	UEPB1	1.40	174.81	100.65	75.88	12.73		11.90				
LOCAL NUMBER PORTABILITY																
	Local Number Portability (1 per port)			UEPFB	LNPCX	0.35										
INTEROFFICE TRANSPORT																
	Interoffice Transport - Dedicated - 2 Wire Voice Grade - Facility Termination			UEPFB	U1TV2	25.32	47.35	31.78								
	Interoffice Transport - Dedicated - 2 Wire Voice Grade - Per Mile or Fraction Mile			UEPFB	1L5XX	0.0091										
FEATURES																
	All Features Offered			UEPFB	UEPVF	2.26	0.00	0.00				11.90				
NONRECURRING CHARGES (NRCs) - CURRENTLY COMBINED																
	2-Wire Loop / Dedicated IO Transport / 2 Wire Line Port Combination - Conversion - Switch-as-is			UEPFB	USAC2		16.97	3.73				11.90				
	2-Wire Loop / Dedicated IO Transport / 2 Wire Line Port Combination - Conversion - Switch with change			UEPFB	USACC		16.97	3.73				11.90				
2-WIRE VOICE GRADE LOOP WITH 2-WIRE LINE PORT (BUS - PBX)																
UNE Port/Loop Combination Rates																
	2-Wire VG Loop/IO Tranport/Port Combo - Zone 1		1			13.64										
	2-Wire VG Loop/IO Tranport/Port Combo - Zone 2		2			18.80										
	2-Wire VG Loop/IO Tranport/Port Combo - Zone 3		3			32.27										

UNBUNDLED NETWORK ELEMENTS - Florida														Attachment: 2		Exhibit: B	
CATEGORY		RATE ELEMENTS	Interim	Zone	BCS	USOC	RATES ($)					Svc Order Submitted Elec per LSR	Svc Order Submitted Manually per LSR	Incremental Charge - Manual Svc Order vs. Electronic-1st	Incremental Charge - Manual Svc Order vs. Electronic-Add'l	Incremental Charge - Manual Svc Order vs. Electronic-Disc 1st	Incremental Charge - Manual Svc Order vs. Electronic-Disc Add'l
							Rec	Nonrecurring		Nonrecurring Disconnect		OSS Rates($)					
								First	Add'l	First	Add'l	SOMEC	SOMAN	SOMAN	SOMAN	SOMAN	SOMAN
	UNE Loop Rates																
		2-Wire Voice Grade Loop (SL2) - Zone 1		1	UEPFP	UECF2	12.24										
		2-Wire Voice Grade Loop (SL2) - Zone 2		2	UEPFP	UECF2	17.40										
		2-Wire Voice Grade Loop (SL2) - Zone 3		3	UEPFP	UECF2	30.87										
	2-Wire Voice Grade Line Port Rates (BUS - PBX)																
		Line Side Unbundled Combination 2-Way PBX Trunk Port - Bus			UEPFP	UEPPC	1.40	174.81	100.65	75.88	12.73		11.90				
		Line Side Unbundled Outward PBX Trunk Port - Bus			UEPFP	UEPPO	1.40	174.81	100.65	75.88	12.73		11.90				
		Line Side Unbundled Incoming PBX Trunk Port - Bus			UEPFP	UEPP1	1.40	174.81	100.65	75.88	12.73		11.90				
		2-Wire Voice Unbundled PBX LD Terminal Ports			UEPFP	UEPLD	1.40	174.81	100.65	75.88	12.73		11.90				
		2-Wire Voice Unbundled 2-Way Combination PBX Usage Port			UEPFP	UEPXA	1.40	174.81	100.65	75.88	12.73		11.90				
		2-Wire Voice Unbundled PBX Toll Terminal Hotel Ports			UEPFP	UEPXB	1.40	174.81	100.65	75.88	12.73		11.90				
		2-Wire Voice Unbundled PBX LD DDD Terminals Port			UEPFP	UEPXC	1.40	174.81	100.65	75.88	12.73		11.90				
		2-Wire Voice Unbundled PBX LD Terminal Switchboard Port			UEPFP	UEPXD	1.40	174.81	100.65	75.88	12.73		11.90				
		2-Wire Voice Unbundled PBX LD Terminal Switchboard IDD Capable Port			UEPFP	UEPXE	1.40	174.81	100.65	75.88	12.73		11.90				
		2-Wire Voice Unbundled 2-Way PBX Hotel/Hospital Economy Administrative Calling Port			UEPFP	UEPXL	1.40	174.81	100.65	75.88	12.73		11.90				
		2-Wire Voice Unbundled 2-Way PBX Hotel/Hospital Economy Room Calling Port			UEPFP	UEPXM	1.40	174.81	100.65	75.88	12.73		11.90				
		2-Wire Voice Unbundled 1-Way Outgoing PBX Hotel/Hospital Discount Room Calling Port			UEPFP	UEPXO	1.40	174.81	100.65	75.88	12.73		11.90				
		2-Wire Voice Unbundled 1-Way Outgoing PBX Measured Port			UEPFP	UEPXS	1.40	174.81	100.65	75.88	12.73		11.90				
	LOCAL NUMBER PORTABILITY																
		Local Number Portability (1 per port)			UEPFP	LNPCP	3.15	0.00	0.00				11.90				
	INTEROFFICE TRANSPORT																
		Interoffice Transport - Dedicated - 2 Wire Voice Grade - Facility Termination			UEPFP	U1TV2	25.32	47.35	31.78								
		Interoffice Transport - Dedicated - 2 Wire Voice Grade - Per Mile or Fraction Mile			UEPFP	1L5XX	0.0091										
	FEATURES																
		All Features Offered			UEPFP	UEPVF	2.26	0.00	0.00				11.90				
	NONRECURRING CHARGES (NRCs) - CURRENTLY COMBINED																
		2-Wire Loop / Dedicated IO Transport / 2 Wire Line Port Combination - Conversion - Switch-as-is			UEPFP	USAC2		16.97	3.73				11.90				
		2-Wire Loop / Dedicated IO Transport / 2 Wire Line Port Combination - Conversion - Switch with change			UEPFP	USACC		16.97	3.73				11.90				
UNBUNDLED PORT/LOOP COMBINATIONS - COST BASED RATES																	
	2-WIRE VOICE GRADE LOOP- BUS ONLY - WITH 2-WIRE DID TRUNK PORT																
	UNE Port/Loop Combination Rates																
		2-Wire VG Loop/2-Wire DID Trunk Port Combo - UNE Zone 1		1			20.95										
		2-Wire VG Loop/2-Wire DID Trunk Port Combo - UNE Zone 2		2			26.11										
		2-Wire VG Loop/2-Wire DID Trunk Port Combo - UNE Zone 3		3			39.58										
	UNE Loop Rates																
		2-Wire Analog Voice Grade Loop - (SL2) - UNE Zone 1		1	UEPPX	UECD1	12.24						11.90			1.83	
		2-Wire Analog Voice Grade Loop - (SL2) - UNE Zone 2		2	UEPPX	UECD1	17.40						11.90			1.83	
		2-Wire Analog Voice Grade Loop - (SL2) - UNE Zone 3		3	UEPPX	UECD1	30.87						11.90			1.83	
	UNE Port Rate																
		Exchange Ports - 2-Wire DID Port			UEPPX	UEPD1	8.71	214.16	98.29				11.90			1.83	
	NONRECURRING CHARGES - CURRENTLY COMBINED																
		2-Wire Voice Grade Loop / 2-Wire DID Trunk Port Combination - Switch-as-is			UEPPX	USAC1		7.85	1.87				11.90				
		2-Wire Voice Grade Loop / 2-Wire DID Trunk Port Conversion with BellSouth Allowable Changes			UEPPX	USA1C		7.85	1.87				11.90				
	ADDITIONAL NRCs																
		2-Wire DID Subsequent Activity - Add Trunks, Per Trunk			UEPPX	USAS1		32.26	32.26				11.90				
	Telephone Number/Trunk Group Establisment Charges																
		DID Trunk Termination (One Per Port)			UEPPX	NDT	0.00	0.00	0.00				11.90			1.83	

CATEGORY	RATE ELEMENTS	Interim	Zone	BCS	USOC	RATES ($) Rec	Nonrecurring First	Nonrecurring Add'l	Nonrecurring Disconnect First	Nonrecurring Disconnect Add'l	Svc Order Submitted Elec per LSR	Svc Order Submitted Manually per LSR	Attachment: 2 Incremental Charge - Manual Svc Order vs. Electronic-1st	Attachment: 2 Incremental Charge - Manual Svc Order vs. Electronic-Add'l	Exhibit: B Incremental Charge - Manual Svc Order vs. Electronic-Disc 1st	Exhibit: B Incremental Charge - Manual Svc Order vs. Electronic-Disc Add'l
											OSS Rates($)					
											SOMEC	SOMAN	SOMAN	SOMAN	SOMAN	SOMAN
	DID Numbers, Establish Trunk Group and Provide First Group of 20 DID Numbers			UEPPX	NDZ	0.00	0.00	0.00				11.90			1.83	
	Additional DID Numbers for each Group of 20 DID Numbers			UEPPX	ND4	0.00	0.00	0.00				11.90			1.83	
	DID Numbers, Non- consecutive DID Numbers , Per Number			UEPPX	ND5	0.00	0.00	0.00				11.90			1.83	
	Reserve Non-Consecutive DID numbers			UEPPX	ND6	0.00	0.00	0.00				11.90			1.83	
	Reserve DID Numbers			UEPPX	NDV	0.00	0.00	0.00				11.90			1.83	
LOCAL NUMBER PORTABILITY																
	Local Number Portability (1 per port)			UEPPX	LNPCP	3.15	0.00	0.00								
2-WIRE ISDN DIGITAL GRADE LOOP WITH 2-WIRE ISDN DIGITAL LINE SIDE PORT																
UNE Port/Loop Combination Rates																
	2W ISDN Digital Grade Loop/2W ISDN Digital Line Side Port - UNE Zone 1		1	UEPPB UEPPR		22.63										
	2W ISDN Digital Grade Loop/2W ISDN Digital Line Side Port - UNE Zone 2		2	UEPPB UEPPR		29.05										
	2W ISDN Digital Grade Loop/2W ISDN Digital Line Side Port - UNE Zone 3		3	UEPPB UEPPR		45.84										
UNE Loop Rates																
	2-Wire ISDN Digital Grade Loop - UNE Zone 1		1	UEPPB UEPPR	USL2X	15.25						11.90			1.83	
	2-Wire ISDN Digital Grade Loop - UNE Zone 2		2	UEPPB UEPPR	USL2X	21.67						11.90			1.83	
	2-Wire ISDN Digital Grade Loop - UNE Zone 3		3	UEPPB UEPPR	USL2X	38.46						11.90			1.83	
UNE Port Rate																
	Exchange Port - 2-Wire ISDN Line Side Port			UEPPB UEPPR	UEPPB	7.38	194.52	145.09				11.09			1.83	
NONRECURRING CHARGES - CURRENTLY COMBINED																
	2-Wire ISDN Digital Grade Loop / 2-Wire ISDN Line Side Port Combination - Conversion			UEPPB UEPPR	USACB	0.00	25.22	17.00				11.90			1.83	
ADDITIONAL NRCs																
LOCAL NUMBER PORTABILITY																
	Local Number Portability (1 per port)			UEPPB UEPPR	LNPCX	0.35	0.00	0.00								
B-CHANNEL USER PROFILE ACCESS:																
	CVS/CSD (DMS/5ESS)			UEPPB UEPPR	U1UCA	0.00	0.00	0.00								
	CVS (EWSD)			UEPPB UEPPR	U1UCB	0.00	0.00	0.00								
	CSD			UEPPB UEPPR	U1UCC	0.00	0.00	0.00								
B-CHANNEL AREA PLUS USER PROFILE ACCESS: (AL,KY,LA,MS SC,MS, & TN)																
USER TERMINAL PROFILE																
	User Terminal Profile (EWSD only)			UEPPB UEPPR	U1UMA	0.00	0.00	0.00								
VERTICAL FEATURES																
	All Vertical Features - One per Channel B User Profile			UEPPB UEPPR	UEPVF	2.26	0.00	0.00				11.90				
INTEROFFICE CHANNEL MILEAGE																
	Interoffice Channel mileage each, including first mile and facilities termination			UEPPB UEPPR	M1GNC	25.3291	47.35	31.78	18.31	7.03		11.90			1.83	
	Interoffice Channel mileage each, additional mile			UEPPB UEPPR	M1GNM	0.0091	0.00	0.00				11.90			1.83	
4-WIRE DS1 DIGITAL LOOP WITH 4-WIRE ISDN DS1 DIGITAL TRUNK PORT																
UNE Port/Loop Combination Rates																
	4W DS1 Digital Loop/4W ISDN DS1 Digital Trunk Port - UNE Zone 1		1	UEPPP		153.48										
	4W DS1 Digital Loop/4W ISDN DS1 Digital Trunk Port - UNE Zone 2		2	UEPPP		183.28										
	4W DS1 Digital Loop/4W ISDN DS1 Digital Trunk Port - UNE Zone 3		3	UEPPP		261.12										
UNE Loop Rates																
	4-Wire DS1 Digital Loop - UNE Zone 1		1	UEPPP	USL4P	70.74						11.90			1.83	
	4-Wire DS1 Digital Loop - UNE Zone 2		2	UEPPP	USL4P	100.54						11.90			1.83	
	4-Wire DS1 Digital Loop - UNE Zone 3		3	UEPPP	USL4P	178.38						11.90			1.83	
UNE Port Rate																
	Exchange Ports - 4-Wire ISDN DS1 Port			UEPPP	UEPPP	82.74	488.36	276.65				11.90			1.83	
NONRECURRING CHARGES - CURRENTLY COMBINED																
	4-Wire DS1 Digital Loop / 4-Wire ISDN DS1 Digital Trunk Port Combination - Conversion -Switch-as-is			UEPPP	USACP	0.00	84.17	61.38				11.90			1.83	

UNBUNDLED NETWORK ELEMENTS - Florida													Attachment: 2		Exhibit: B	
CATEGORY	RATE ELEMENTS	Interim	Zone	BCS	USOC	RATES ($)					Svc Order Submitted Elec per LSR	Svc Order Submitted Manually per LSR	Incremental Charge - Manual Svc Order vs. Electronic-1st	Incremental Charge - Manual Svc Order vs. Electronic-Add'l	Incremental Charge - Manual Svc Order vs. Electronic-Disc 1st	Incremental Charge - Manual Svc Order vs. Electronic-Disc Add'l
						Rec	Nonrecurring		Nonrecurring Disconnect		OSS Rates($)					
							First	Add'l	First	Add'l	SOMEC	SOMAN	SOMAN	SOMAN	SOMAN	SOMAN
ADDITIONAL NRCs																
	4-Wire DS1 Loop/4-W ISDN Digtl Trk Port - Subsqt Actvy-Inward/two way Tel Nos. (except NC)			UEPPP	PR7TF		0.5412					11.90			1.83	
	4-Wire DS1 Loop / 4-Wire ISDN DS1 Digital Trunk Port - Outward Tel Numbers (All States except NC)			UEPPP	PR7TO		12.71	12.71				11.90			1.83	
	4-Wire DS1 Loop / 4-Wire ISDN DS1 Digital Trk Port - Subsequent Inward Tel Numbers			UEPPP	PR7ZT		25.42	25.42				11.90			1.83	
LOCAL NUMBER PORTABILITY																
	Local Number Portability (1 per port)			UEPPP	LNPCN	1.75										
INTERFACE (Provsioning Only)																
	Voice/Data			UEPPP	PR71V	0.00	0.00	0.00								
	Digital Data			UEPPP	PR71D	0.00	0.00	0.00								
	Inward Data			UEPPP	PR71E	0.00	0.00	0.00								
New or Additional "B" Channel																
	New or Additional - Voice/Data B Channel			UEPPP	PR7BV	0.00	15.48					11.90			1.83	
	New or Additional - Digital Data B Channel			UEPPP	PR7BF	0.00	15.48					11.90			1.83	
	New or Additional Inward Data B Channel			UEPPP	PR7BD	0.00	15.48					11.90			1.83	
CALL TYPES																
	Inward			UEPPP	PR7C1	0.00	0.00	0.00								
	Outward			UEPPP	PR7CO	0.00	0.00	0.00								
	Two-way			UEPPP	PR7CC	0.00	0.00	0.00								
Interoffice Channel Mileage																
	Fixed Each Including First Mile			UEPPP	1LN1A	88.6256	105.54	98.47	21.47	19.05		11.90			1.93	
	Each Airline-Fractional Additional Mile			UEPPP	1LN1B	0.1856										
4-WIRE DS1 DIGITAL LOOP WITH 4-WIRE DDITS TRUNK PORT																
UNE Port/Loop Combination Rates																
	4W DS1 Digital Loop/4W DDITS Trunk Port - UNE Zone 1		1	UEPDC		125.69						11.90			1.83	
	4W DS1 Digital Loop/4W DDITS Trunk Port - UNE Zone 2		2	UEPDC		155.49						11.90			1.83	
	4W DS1 Digital Loop/4W DDITS Trunk Port - UNE Zone 3		3	UEPDC		233.33						11.90			1.83	
UNE Loop Rates																
	4-Wire DS1 Digital Loop - UNE Zone 1		1	UEPDC	USLDC	70.74						11.90			1.83	
	4-Wire DS1 Digital Loop - UNE Zone 2		2	UEPDC	USLDC	100.54						11.90			1.83	
	4-Wire DS1 Digital Loop - UNE Zone 3		3	UEPDC	USLDC	178.38						11.90			1.83	
UNE Port Rate																
	4-Wire DDITS Digital Trunk Port			UEPDC	UDD1T	54.95	464.86	259.23				11.90			1.83	
NONRECURRING CHARGES - CURRENTLY COMBINED																
	4-Wire DS1 Digital Loop / 4-Wire DDITS Trunk Port Combination - Switch-as-is			UEPDC	USAC4		95.31	46.71				11.90			1.83	
	4-Wire DS1 Digital Loop / 4-Wire DDITS Trunk Port Combination - Conversion with DS1 Changes			UEPDC	USAWA		95.31	46.71				11.90			1.83	
	4-Wire DS1 Digital Loop / 4-Wire DDITS Trunk Port Combination - Conversion with Change - Trunk			UEPDC	USAWB		95.31	46.71				11.90			1.83	
ADDITIONAL NRCs																
	4-Wire DS1 Loop / 4-Wire DDITS Trunk Port - NRC - Subsequent Channel Activation/Chan - 2-Way Trunk			UEPDC	UDTTA		15.69	15.69				11.90			1.83	
	4-Wire DS1 Loop / 4-Wire DDITS Trunk Port - Subsequent Channel Activation/Chan - 1-Way Outward Trunk			UEPDC	UDTTB		15.69	15.69				11.90			1.83	
	4-Wire DS1 Loop / 4-Wire DDITS Trunk Port - Subsqnt Channel Activation/Chan Inward Trunk w/out DID			UEPDC	UDTTC		15.69	15.69				11.90			1.83	
	4-Wire DS1 Loop / 4-Wire DDITS Trunk Port - Subsqnt Chan Activation Per Chan - Inward Trunk with DID			UEPDC	UDTTD		15.69	15.69				11.90			1.83	
	4-Wire DS1 Loop / 4-Wire DDITS Trunk Port - Subsqnt Chan Activation / Chan - 2-Way DID w User Trans			UEPDC	UDTTE		15.69	15.69				11.90			1.83	
BIPOLAR 8 ZERO SUBSTITUTION																
	B8ZS -Superframe Format			UEPDC	CCOSF		0.00	655.00				11.90			1.83	
	B8ZS - Extended Superframe Format			UEPDC	CCOEF		0.00	655.00				11.90			1.83	
Alternate Mark Inversion																
	AMI -Superframe Format			UEPDC	MCOSF		0.00	0.00								
	AMI - Extended SuperFrame Format			UEPDC	MCOPO		0.00	0.00								

UNBUNDLED NETWORK ELEMENTS - Florida													Attachment: 2		Exhibit: B	
CATEGORY	RATE ELEMENTS	Interim	Zone	BCS	USOC	RATES ($)					Svc Order Submitted Elec per LSR	Svc Order Submitted Manually per LSR	Incremental Charge - Manual Svc Order vs. Electronic-1st	Incremental Charge - Manual Svc Order vs. Electronic-Add'l	Incremental Charge - Manual Svc Order vs. Electronic-Disc 1st	Incremental Charge - Manual Svc Order vs. Electronic-Disc Add'l
						Rec	Nonrecurring		Nonrecurring Disconnect		OSS Rates($)					
							First	Add'l	First	Add'l	SOMEC	SOMAN	SOMAN	SOMAN	SOMAN	SOMAN
	Telephone Number/Trunk Group Establisment Charges															
	Telephone Number for 2-Way Trunk Group			UEPDC	UDTGX	0.00						11.90			1.83	
	Telephone Number for 1-Way Outward Trunk Group			UEPDC	UDTGY	0.00						11.90			1.83	
	Telephone Number for 1-Way Inward Trunk Group Without DID			UEPDC	UDTGZ	0.00						11.90			1.83	
	DID Numbers, Establish Trunk Group and Provide First Group of 20 DID Numbers			UEPDC	NDZ	0.00	0.00	0.00				11.90			1.83	
	DID Numbers for each Group of 20 DID Numbers			UEPDC	ND4	0.00						11.90			1.83	
	DID Numbers, Non- consecutive DID Numbers , Per Number			UEPDC	ND5	0.00						11.90			1.83	
	Reserve Non-Consecutive DID Nos.			UEPDC	ND6	0.00	0.00	0.00				11.90			1.83	
	Reserve DID Numbers			UEPDC	NDV	0.00	0.00	0.00				11.90			1.83	
	Dedicated DS1 (Interoffice Channel Mileage) - FX/FCO for 4-Wire DS1 Digital Loop with 4-Wire DDITS Trunk Port															
	Interoffice Channel Mileage - Fixed rate 0-8 miles (Facilities Termination)			UEPDC	1LNO1	88.44	105.54	98.47	21.47	19.05		11.90			1.83	
	Interoffice Channel Mileage - Additional rate per mile - 0-8 miles			UEPDC	1LNOA	0.1856	0.00	0.00								
	Interoffice Channel Mileage - Fixed rate 9-25 miles (Facilities Termination)			UEPDC	1LNO2	0.00	0.00	0.00								
	Interoffice Channel Mileage - Additional rate per mile - 9-25 miles			UEPDC	1LNOB	0.1856	0.00	0.00								
	Interoffice Channel Mileage - Fixed rate 25+ miles (Facilities Termination)			UEPDC	1LNO3	0.00	0.00	0.00	0.00							
	Interoffice Channel Mileage - Additional rate per mile - 25+ miles			UEPDC	1LNOC	0.1856	0.00	0.00								
	Local Number Portability, per DS0 Activated			UEPDC	LNPCP	3.15	0.00	0.00	0.00							
	Central Office Termininating Point			UEPDC	CTG	0.00										
	4-WIRE DS1 LOOP WITH CHANNELIZATION WITH PORT															
	System is 1 DS1 Loop, 1 D4 Channel Bank, and up to 24 Feature Activations															
	Each System can have up to 24 combinations of rates depending on type and number of ports used															
	UNE DS1 Loop															
	4-Wire DS1 Loop - UNE Zone 1		1	UEPMG	USLDC	70.74	0.00	0.00								
	4-Wire DS1 Loop - UNE Zone 2		2	UEPMG	USLDC	100.54	0.00	0.00								
	4-Wire DS1 Loop - UNE Zone 3		3	UEPMG	USLDC	178.38	0.00	0.00								
	UNE DSO Channelization Capacities (D4 Channel Bank Configurations)															
	24 DSO Channel Capacity - 1 per DS1			UEPMG	VUM24	118.06	0.00	0.00				11.90			1.83	
	48 DSO Channel Capacity - 1 per 2 DS1s			UEPMG	VUM48	236.12	0.00	0.00				11.90			1.83	
	96 DSO Channel Capacity -1per 4 DS1s			UEPMG	VUM96	472.24	0.00	0.00				11.90			1.83	
	144 DS0 Channel Capacity - 1 per 6 DS1s			UEPMG	VUM14	708.36	0.00	0.00				11.90			1.83	
	192 DS0 Channel Capacity -1 per 8 DS1s			UEPMG	VUM19	944.48	0.00	0.00				11.90			1.83	
	240 DS0 Channel Capacity - 1 per 10 DS1s			UEPMG	VUM2O	1,180.60	0.00	0.00				11.90			1.83	
	288 DS0 Channel Capacity - 1 per 12 DS1s			UEPMG	VUM28	1,416.72	0.00	0.00				11.90			1.83	
	384 DS0 Channel Capacity - 1 per 16 DS1s			UEPMG	VUM38	1,888.96	0.00	0.00				11.90			1.83	
	480 DS0 Channel Capacity - 1 per 20 DS1s			UEPMG	VUM4O	2,361.20	0.00	0.00				11.90			1.83	
	576 DS0 Channel Capacity -1 per 24 DS1s			UEPMG	VUM57	2,833.44	0.00	0.00				11.90			1.83	
	672 DS0 Channel Capacity - 1 per 28 DS1s			UEPMG	VUM67	3,305.68	0.00	0.00				11.90			1.83	
	Non-Recurring Charges (NRC) Associated with 4-Wire DS1 Loop with Channeliztion with Port - Conversion Charge Based on a System															
	A Minimum System configuration is One (1) DS1, One (1) D4 Channel Bank, and Up To 24 DSO Ports with Feature Activations.															
	Multiples of this configuration functioning as one are considered Add'l after the minimum system configuration is counted.															
	NRC - Conversion (Currently Combined) with or without BellSouth Allowed Changes			UEPMG	USAC4	0.00	96.77	4.24				11.90				
	System Additions at End User Locations Where 4-Wire DS1 Loop with Channelization with Port Combination Currently Exists and															
	New (Not Currently Combined) in all states, except in Density Zone 1 of Top 8 MSA's															
	1 DS1/D4 Channel Bank - Additionally Add NRC for each Port and Assoc Fea Activation			UEPMG	VUMD4	0.00	726.11	468.21	145.32	17.24		11.90				
	Bipolar 8 Zero Substitution															
	Clear Channel Capability Format, superframe - Subsequent Activity Only			UEPMG	CCOSF	0.00	0.00	655.00				11.90				
	Clear Channel Capability Format - Extended Superframe - Subsequent Activity Only			UEPMG	CCOEF	0.00	0.00	655.00				11.90				
	Alternate Mark Inversion (AMI)															

UNBUNDLED NETWORK ELEMENTS - Florida														Attachment: 2		Exhibit: B	
CATEGORY	RATE ELEMENTS	Interim	Zone	BCS	USOC	RATES ($)					Svc Order Submitted Elec per LSR	Svc Order Submitted Manually per LSR	Incremental Charge - Manual Svc Order vs. Electronic-1st	Incremental Charge - Manual Svc Order vs. Electronic-Add'l	Incremental Charge - Manual Svc Order vs. Electronic-Disc 1st	Incremental Charge - Manual Svc Order vs. Electronic-Disc Add'l
						Rec	Nonrecurring		Nonrecurring Disconnect		OSS Rates($)					
							First	Add'l	First	Add'l	SOMEC	SOMAN	SOMAN	SOMAN	SOMAN	SOMAN
	Superframe Format			UEPMG	MCOSF	0.00	0.00	0.00								
	Extended Superframe Format			UEPMG	MCOPO	0.00	0.00	0.00								
Exchange Ports Associated with 4-Wire DS1 Loop with Channelization with Port																
Exchange Ports																
	Line Side Combination Channelized PBX Trunk Port - Business			UEPPX	UEPCX	1.40	0.00	0.00	0.00	0.00		11.90			1.83	
	Line Side Outward Channelized PBX Trunk Port - Business			UEPPX	UEPOX	1.40	0.00	0.00	0.00	0.00		11.90			1.83	
	Line Side Inward Only Channelized PBX Trunk Port without DID			UEPPX	UEP1X	1.40	0.00	0.00	0.00	0.00		11.90			1.83	
	2-Wire Trunk Side Unbundled Channelized DID Trunk Port			UEPPX	UEPDM	8.71	0.00	0.00	0.00	0.00		11.90			1.83	
Feature Activations - Unbundled Loop Concentration																
	Feature (Service) Activation for each Line Port Terminated in D4 Bank			UEPPX	1PQWM	0.6402	25.40	13.41	3.96	3.93		11.90			1.83	
	Feature (Service) Activation for each Trunk Port Terminated in D4 Bank			UEPPX	1PQWU	0.6402	78.16	18.42	56.03	10.95		11.90			1.83	
Telephone Number/ Group Establishment Charges for DID Service																
	DID Trunk Termination (1 per Port)			UEPPX	NDT	0.00	0.00	0.00				11.90				
	Estab Trk Grp and Provide 1st 20 DID Nos. (FL,GA, NC,& SC)			UEPPX	NDZ	0.00	0.00	0.00				11.90				
	DID Numbers - groups of 20 - Valid all States			UEPPX	ND4	0.00	0.00	0.00				11.90				
	Non-Consecutive DID Numbers - per number			UEPPX	ND5	0.00	0.00	0.00				11.90				
	Reserve Non-Consecutive DID Numbers			UEPPX	ND6	0.00	0.00	0.00				11.90				
	Reserve DID Numbers			UEPPX	NDV	0.00	0.00	0.00				11.90				
Local Number Portability																
	Local Number Portability - 1 per port			UEPPX	LNPCP	3.15	0.00	0.00								
FEATURES - Vertical and Optional																
Local Switching Features Offered with Line Side Ports Only																
	All Features Available			UEPPX	UEPVF	2.26	0.00	0.00				11.90			1.83	
UNBUNDLED PORT LOOP COMBINATIONS - MARKET RATES																
Market Rates shall apply where BellSouth is not required to provide unbundled local switching or switch ports per FCC and/or State Commission rules.																
This includes:																
Unbundled port/loop combinations that are Currently Combined or Not Currently Combined in Zone 1 of the Top 8 MSAS in BellSouth's region for end users with 4 or more DS0 equivalent lines.																
The Top 8 MSAs in BellSouth's region are: FL (Orlando, Ft. Lauderdale, Miami); GA (Atlanta); LA (New Orleans); NC (Greensboro-Winston Salem-Highpoint/Charlotte-Gastonia-Rock Hill); TN (Nashville).																
BellSouth currently is developing the billing capability to mechanically bill the recurring and non-recurring Market Rates in this section except for nonrecurring charges for not currently combined in FL and NC. In the interim where BellSouth cannot bill Market Rates, BellSouth shall bill the rates in the Cost-Based section preceding in lieu of the Market Rates and reserves the right to true-up the billing difference.																
The Market Rate for unbundled ports includes all available features in all states.																
End Office and Tandem Switching Usage and Common Transport Usage rates in the Port section of this rate exhibit shall apply to all combinations of loop/port network elements except for UNE Coin Port/Loop Combinations which have a flat rate usage charge (USOC: URECU).																
For Not Currently Combined scenarios the Nonrecurring charges are listed in the First and Additional NRC columns for each Port USOC. For Currently Combined scenarios, the Nonrecurring charges are listed in the NRC - Currently Combined section. Additional NRCs may apply also and are categorized accordingly.																
2-WIRE VOICE GRADE LOOP WITH 2-WIRE LINE PORT (RES)																
UNE Port/Loop Combination Rates																
	2-Wire VG Loop/Port Combo - Zone 1		1			23.77										
	2-Wire VG Loop/Port Combo - Zone 2		2			27.88										
	2-Wire VG Loop/Port Combo - Zone 3		3			38.63										
UNE Loop Rates																
	2-Wire Voice Grade Loop (SL1) - Zone 1		1	UEPRX	UEPLX	9.77										
	2-Wire Voice Grade Loop (SL1) - Zone 2		2	UEPRX	UEPLX	13.88										
	2-Wire Voice Grade Loop (SL1) - Zone 3		3	UEPRX	UEPLX	24.63										
2-Wire Voice Grade Line Port (Res)																
	2-Wire voice unbundled port - residence			UEPRX	UEPRL	14.00	90.00	90.00				11.90				
	2-Wire voice unbundled port with Caller ID - res			UEPRX	UEPRC	14.00	90.00	90.00				11.90				
	2-Wire voice unbundled port outgoing only - res			UEPRX	UEPRO	14.00	90.00	90.00				11.90				
	2-Wire voice unbundled Florida Area Calling with Caller ID - res			UEPRX	UEPAF	14.00	90.00	90.00				11.90				
	2-Wire voice unbundles res, low usage line port with Caller ID (LUM)			UEPRX	UEPAP	14.00	90.00	90.00				11.90				
	2-Wire voice unbundled Low Usage Line Port without Caller ID Capability			UEPRX	UEPRT	14.00	90.00	90.00				11.90				

UNBUNDLED NETWORK ELEMENTS - Florida														Attachment: 2		Exhibit: B	
CATEGORY		RATE ELEMENTS	Interim	Zone	BCS	USOC	RATES ($)					Svc Order Submitted Elec per LSR	Svc Order Submitted Manually per LSR	Incremental Charge - Manual Svc Order vs. Electronic-1st	Incremental Charge - Manual Svc Order vs. Electronic-Add'l	Incremental Charge - Manual Svc Order vs. Electronic-Disc 1st	Incremental Charge - Manual Svc Order vs. Electronic-Disc Add'l
							Rec	Nonrecurring		Nonrecurring Disconnect		OSS Rates($)					
								First	Add'l	First	Add'l	SOMEC	SOMAN	SOMAN	SOMAN	SOMAN	SOMAN
		2-Wire voice unbundled Florida extended dialing port for use with CREX7 and Caller ID			UEPRX	UEPA1	14.00	90.00	90.00				11.90				
		2-Wire voice unbundled Florida extended dialing port for use with CREX7, without Caller ID capability			UEPRX	UEPA8	14.00	90.00	90.00				11.90				
		2-Wire voice unbundled Florida Area Calling Port without Caller ID Capability			UEPRX	UEPA9	14.00	90.00	90.00				11.90				
	LOCAL NUMBER PORTABILITY																
		Local Number Portability (1 per port)			UEPRX	LNPCX	0.35										
	FEATURES																
		All Features Offered			UEPRX	UEPVF	0.00	0.00	0.00				11.90				
	NONRECURRING CHARGES - CURRENTLY COMBINED																
		2-Wire Voice Grade Loop / Line Port Combination - Switch-as-is			UEPRX	USAC2		41.50	41.50				11.90				
		2-Wire Voice Grade Loop / Line Port Combination - Switch with change			UEPRX	USACC		41.50	41.50				11.90				
	ADDITIONAL NRCs																
		NRC - 2-Wire Voice Grade Loop/Line Port Combination - Subsequent			UEPRX	USAS2		0.00	0.00				11.90				
	2-WIRE VOICE GRADE LOOP WITH 2-WIRE LINE PORT (BUS)																
	UNE Port/Loop Combination Rates																
		2-Wire VG Loop/Port Combo - Zone 1		1			23.77										
		2-Wire VG Loop/Port Combo - Zone 2		2			27.88										
		2-Wire VG Loop/Port Combo - Zone 3		3			38.63										
	UNE Loop Rates																
		2-Wire Voice Grade Loop (SL1) - Zone 1		1	UEPBX	UEPLX	9.77										
		2-Wire Voice Grade Loop (SL1) - Zone 2		2	UEPBX	UEPLX	13.88										
		2-Wire Voice Grade Loop (SL1) - Zone 3		3	UEPBX	UEPLX	24.63										
	2-Wire Voice Grade Line Port (Bus)																
		2-Wire voice unbundled port without Caller ID - bus			UEPBX	UEPBL	14.00	90.00	90.00				11.90				
		2-Wire voice unbundled port with Caller + E484 ID - bus			UEPBX	UEPBC	14.00	90.00	90.00				11.90				
		2-Wire voice unbundled port outgoing only - bus			UEPBX	UEPBO	14.00	90.00	90.00				11.90				
		2-Wire voice unbundled Incoming Only Port without Caller ID Capability			UEPBX	UEPBE	14.00	90.00	90.00				11.90				
	LOCAL NUMBER PORTABILITY																
		Local Number Portability (1 per port)			UEPBX	LNPCX	0.35										
	NONRECURRING CHARGES - CURRENTLY COMBINED																
		2-Wire Voice Grade Loop / Line Port Combination - Switch-as-is			UEPBX	USAC2		41.50	41.50				11.90				
		2-Wire Voice Grade Loop / Line Port Combination - Switch with change			UEPBX	USACC		41.50	41.50				11.90				
	ADDITIONAL NRCs																
		NRC - 2-Wire Voice Grade Loop/Line Port Combination - Subsequent			UEPBX	USAS2		0.00	0.00				11.90				
	2-WIRE VOICE GRADE LOOP WITH 2-WIRE LINE PORT (RES - PBX)																
	UNE Port/Loop Combination Rates																
		2-Wire VG Loop/Port Combo - Zone 1		1			23.77										
		2-Wire VG Loop/Port Combo - Zone 2		2			27.88										
		2-Wire VG Loop/Port Combo - Zone 3		3			38.63										
	UNE Loop Rates																
		2-Wire Voice Grade Loop (SL1) - Zone 1		1	UEPRG	UEPLX	9.77										
		2-Wire Voice Grade Loop (SL1) - Zone 2		2	UEPRG	UEPLX	13.88										
		2-Wire Voice Grade Loop (SL1) - Zone 3		3	UEPRG	UEPLX	24.63										
	2-Wire Voice Grade Line Port Rates (RES - PBX)																
		2-Wire VG Unbundled Combination 2-Way PBX Trunk Port - Res			UEPRG	UEPRD	14.00	90.00	90.00				11.90				
	LOCAL NUMBER PORTABILITY																
		Local Number Portability (1 per port)			UEPRG	LNPCP	3.15	0.00	0.00								
	FEATURES																
		All Features Offered			UEPRG	UEPVF	0.00	0.00	0.00				11.90				

UNBUNDLED NETWORK ELEMENTS - Florida													Attachment: 2		Exhibit: B	
CATEGORY	RATE ELEMENTS	Interim	Zone	BCS	USOC	RATES ($)					Svc Order Submitted Elec per LSR	Svc Order Submitted Manually per LSR	Incremental Charge - Manual Svc Order vs. Electronic-1st	Incremental Charge - Manual Svc Order vs. Electronic-Add'l	Incremental Charge - Manual Svc Order vs. Electronic-Disc 1st	Incremental Charge - Manual Svc Order vs. Electronic-Disc Add'l
						Rec	Nonrecurring		Nonrecurring Disconnect		OSS Rates($)					
							First	Add'l	First	Add'l	SOMEC	SOMAN	SOMAN	SOMAN	SOMAN	SOMAN
NONRECURRING CHARGES - CURRENTLY COMBINED																
	2-Wire Voice Grade Loop/ Line Port Combination - Switch-As-Is			UEPRG	USAC2		41.50	41.50				11.90				
	2-Wire Voice Grade Loop/ Line Port Combination - Switch with Change			UEPRG	USACC		41.50	41.50				11.90				
ADDITIONAL NRCs																
	2 Wire Loop/Line Side Port Combination - Non feature - Subsequent Activity- Nonrecurring						0.00	0.00				11.90				
	PBX Subsequent Activity - Change/Rearrange Multiline Hunt Group						7.09	7.09				11.90				
2-WIRE VOICE GRADE LOOP WITH 2-WIRE LINE PORT (BUS - PBX)																
UNE Port/Loop Combination Rates																
	2-Wire VG Loop/Port Combo - Zone 1		1			23.77										
	2-Wire VG Loop/Port Combo - Zone 2		2			27.88										
	2-Wire VG Loop/Port Combo - Zone 3		3			38.63										
UNE Loop Rates																
	2-Wire Voice Grade Loop (SL1) - Zone 1		1	UEPPX	UEPLX	9.77										
	2-Wire Voice Grade Loop (SL1) - Zone 2		2	UEPPX	UEPLX	13.88										
	2-Wire Voice Grade Loop (SL1) - Zone 3		3	UEPPX	UEPLX	24.63										
2-Wire Voice Grade Line Port Rates (BUS - PBX)																
	Line Side Unbundled Combination 2-Way PBX Trunk Port - Bus			UEPPX	UEPPC	14.00	90.00	90.00				11.90				
	Line Side Unbundled Outward PBX Trunk Port - Bus			UEPPX	UEPPO	14.00	90.00	90.00				11.90				
	Line Side Unbundled Incoming PBX Trunk Port - Bus			UEPPX	UEPP1	14.00	90.00	90.00				11.90				
	2-Wire Voice Unbundled PBX LD Terminal Ports			UEPPX	UEPLD	14.00	90.00	90.00				11.90				
	2-Wire Voice Unbundled 2-Way Combination PBX Usage Port			UEPPX	UEPXA	14.00	90.00	90.00				11.90				
	2-Wire Voice Unbundled PBX Toll Terminal Hotel Ports			UEPPX	UEPXB	14.00	90.00	90.00				11.90				
	2-Wire Voice Unbundled PBX LD DDD Terminals Port			UEPPX	UEPXC	14.00	90.00	90.00				11.90				
	2-Wire Voice Unbundled PBX LD Terminal Switchboard Port			UEPPX	UEPXD	14.00	90.00	90.00				11.90				
	2-Wire Voice Unbundled PBX LD Terminal Switchboard IDD Capable Port			UEPPX	UEPXE	14.00	90.00	90.00				11.90				
	2-Wire Voice Unbundled 2-Way PBX Hotel/Hospital Economy Administrative Calling Port			UEPPX	UEPXL	14.00	90.00	90.00				11.90				
	2-Wire Voice Unbundled 2-Way PBX Hotel/Hospital Economy Room Calling Port			UEPPX	UEPXM	14.00	90.00	90.00				11.90				
	2-Wire Voice Unbundled 1-Way Outgoing PBX Hotel/Hospital Discount Room Calling Port			UEPPX	UEPXO	14.00	90.00	90.00				11.90				
	2-Wire Voice Unbundled 1-Way Outgoing PBX Measured Port			UEPPX	UEPXS	14.00	90.00	90.00				11.90				
LOCAL NUMBER PORTABILITY																
	Local Number Portability (1 per port)			UEPPX	LNPCP	3.15	0.00	0.00								
FEATURES																
	All Features Offered			UEPPX	UEPVF	0.00	0.00	0.00				11.90				
NONRECURRING CHARGES - CURRENTLY COMBINED																
	2-Wire Voice Grade Loop/ Line Port Combination - Switch-As-Is			UEPPX	USAC2		41.50	41.50				11.90				
	2-Wire Voice Grade Loop/ Line Port Combination - Switch with Change			UEPPX	USACC		41.50	41.50				11.90				
ADDITIONAL NRCs																
	2-Wire Voice Grade Loop/ Line Port Combination - Subsequent			UEPPX	USAS2	0.00	0.00	0.00				11.90				
	2 Wire Loop/Line Side Port Combination - Non feature - Subsequent Activity- Nonrecurring						0.00	0.00				11.90				
	PBX Subsequent Activity - Change/Rearrange Multiline Hunt Group						7.09	7.09				11.90				
2-WIRE VOICE GRADE LOOP WITH 2-WIRE ANALOG LINE COIN PORT																
UNE Port/Loop Combination Rates																
	2-Wire VG Coin Port/Loop Combo – Zone 1		1			23.77										
	2-Wire VG Coin Port/Loop Combo – Zone 2		2			27.88										
	2-Wire VG Coin Port/Loop Combo – Zone 3		3			38.63										

CATEGORY	RATE ELEMENTS	Interim	Zone	BCS	USOC	RATES ($)					Svc Order Submitted Elec per LSR	Svc Order Submitted Manually per LSR	Attachment: 2 Incremental Charge - Manual Svc Order vs. Electronic-1st	Attachment: 2 Incremental Charge - Manual Svc Order vs. Electronic-Add'l	Exhibit: B Incremental Charge - Manual Svc Order vs. Electronic-Disc 1st	Exhibit: B Incremental Charge - Manual Svc Order vs. Electronic-Disc Add'l
						Rec	Nonrecurring		Nonrecurring Disconnect		OSS Rates($)					
							First	Add'l	First	Add'l	SOMEC	SOMAN	SOMAN	SOMAN	SOMAN	SOMAN
	UNE Loop Rates															
	2-Wire Voice Grade Loop (SL1) - Zone 1		1	UEPCO	UEPLX	9.77										
	2-Wire Voice Grade Loop (SL1) - Zone 2		2	UEPCO	UEPLX	13.88										
	2-Wire Voice Grade Loop (SL1) - Zone 3		3	UEPCO	UEPLX	24.63										
	2-Wire Voice Grade Line Port Rates (Coin)															
	2-Wire Coin 2-Way with Operator Screening and Blocking: 011, 900/976, 1+DDD (FL)			UEPCO	UEP2F	14.00	90.00	90.00				11.90				
	2-Wire Coin 2-Way with Operator Screening and 011 Blocking (FL)			UEPCO	UEPFA	14.00	90.00	90.00				11.90				
	2-Wire Coin 2-Way with Operator Screening and Blocking: 900/976, 1+DDD, 011+, and Local (FL)			UEPCO	UEPCG	14.00	90.00	90.00				11.90				
	2-Wire Coin Outward with Operator Screening and 011 Blocking (AL, FL)			UEPCO	UEPRK	14.00	90.00	90.00				11.90				
	2-Wire Coin Outward with Operator Screening and Blocking: 900/976, 1+DDD, 011+ (FL)			UEPCO	UEPOF	14.00	90.00	90.00				11.90				
	2-Wire Coin Outward with Operator Screening and Blocking: 900/976, 1+DDD, 011+, and Local (FL, GA)			UEPCO	UEPCQ	14.00	90.00	90.00				11.90				
	LOCAL NUMBER PORTABILITY															
	Local Number Portability (1 per port)			UEPCO	LNPCX	0.35										
	NONRECURRING CHARGES - CURRENTLY COMBINED															
	2-Wire Voice Grade Loop/ Line Port Combination - Switch-As-Is			UEPCO	USAC2		41.50	41.50				11.90				
	2-Wire Voice Grade Loop/ Line Port Combination - Switch with Change			UEPCO	USACC		41.50	41.50								
	ADDITIONAL NRCs															
	2-Wire Voice Grade Loop/ Line Port Combination - Subsequent			UEPCO	USAS2		0.00	0.00				11.90				
	2-WIRE VOICE LOOP/ 2WIRE VOICE GRADE IO TRANSPORT/ 2-WIRE LINE PORT (RES)															
	UNE Port/Loop Combination Rates															
	2-Wire VG Loop/IO Tranport/Port Combo - Zone 1		1			26.24										
	2-Wire VG Loop/IO Tranport/Port Combo - Zone 2		2			31.40										
	2-Wire VG Loop/IO Tranport/Port Combo - Zone 3		3			44.87										
	UNE Loop Rates															
	2-Wire Voice Grade Loop (SL2) - Zone 1		1	UEPFR	UECF2	12.24										
	2-Wire Voice Grade Loop (SL2) - Zone 2		2	UEPFR	UECF2	17.40										
	2-Wire Voice Grade Loop (SL2) - Zone 3		3	UEPFR	UECF2	30.87										
	2-Wire Voice Grade Line Port Rates (Res)															
	2-Wire voice unbundled port - residence			UEPFR	UEPRL	14.00	180.00	110.00	85.00	20.00		11.90				
	2-Wire voice unbundled port with Caller ID - res			UEPFR	UEPRC	14.00	180.00	110.00	85.00	20.00		11.90				
	2-Wire voice unbundled port outgoing only - res			UEPFR	UEPRO	14.00	180.00	110.00	85.00	20.00		11.90				
	2-Wire voice unbundled Florida Area Calling with Caller ID - res			UEPFR	UEPAF	14.00	180.00	110.00	85.00	20.00		11.90				
	2-Wire voice unbundles res, low usage line port with Caller ID (LUM)			UEPFR	UEPAP	14.00	180.00	110.00	85.00	20.00		11.90				
	INTEROFFICE TRANSPORT															
	Interoffice Transport - Dedicated - 2 Wire Voice Grade - Facility Termination			UEPFR	U1TV2	25.32	47.35	31.78								
	Interoffice Transport - Dedicated - 2 Wire Voice Grade - Per Mile or Fraction Mile			UEPFR	1L5XX	0.0091										
	FEATURES															
	All Features Offered			UEPFR	UEPVF	0.00	0.00	0.00				11.90				
	LOCAL NUMBER PORTABILITY															
	Local Number Portability (1 per port)			UEPFR	LNPCX	0.35										
	NONRECURRING CHARGES (NRCs) - CURRENTLY COMBINED															
	2-Wire Loop / Dedicated IO Transport / 2 Wire Line Port Combination - Conversion - Switch-as-is			UEPFR	USAC2		16.97	3.73				11.90				
	2-Wire Loop / Dedicated IO Transport / 2 Wire Line Port Combination - Conversion - Switch-With-Change			UEPFR	USACC		16.97	3.73				11.90				
	2-WIRE VOICE LOOP/ 2WIRE VOICE GRADE IO TRANSPORT/ 2-WIRE LINE PORT (BUS)															

UNBUNDLED NETWORK ELEMENTS - Florida

CATEGORY	RATE ELEMENTS	Interim	Zone	BCS	USOC	RATES ($)					Svc Order Submitted Elec per LSR	Svc Order Submitted Manually per LSR	Attachment: 2 Incremental Charge - Manual Svc Order vs. Electronic-1st	Attachment: 2 Incremental Charge - Manual Svc Order vs. Electronic-Add'l	Exhibit: B Incremental Charge - Manual Svc Order vs. Electronic-Disc 1st	Exhibit: B Incremental Charge - Manual Svc Order vs. Electronic-Disc Add'l
						Rec	Nonrecurring		Nonrecurring Disconnect		OSS Rates($)					
							First	Add'l	First	Add'l	SOMEC	SOMAN	SOMAN	SOMAN	SOMAN	SOMAN
	UNE Port/Loop Combination Rates															
	2-Wire VG Loop/IO Tranport/Port Combo - Zone 1		1			26.24										
	2-Wire VG Loop/IO Tranport/Port Combo - Zone 2		2			31.40										
	2-Wire VG Loop/IO Tranport/Port Combo - Zone 3		3			44.87										
	UNE Loop Rates															
	2-Wire Voice Grade Loop (SL2) - Zone 1		1	UEPFB	UECF2	12.24										
	2-Wire Voice Grade Loop (SL2) - Zone 2		2	UEPFB	UECF2	17.40										
	2-Wire Voice Grade Loop (SL2) - Zone 3		3	UEPFB	UECF2	30.87										
	2-Wire Voice Grade Line Port (Bus)															
	2-Wire voice unbundled port without Caller ID - bus			UEPFB	UEPBL	14.00	180.00	110.00	85.00	20.00		11.90				
	2-Wire voice unbundled port with Caller + E484 ID - bus			UEPFB	UEPBC	14.00	180.00	110.00	85.00	20.00		11.90				
	2-Wire voice unbundled port outgoing only - bus			UEPFB	UEPBO	14.00	180.00	110.00	85.00	20.00		11.90				
	2-Wire voice unbundled incoming only port with Caller ID - Bus			UEPFB	UEPB1	14.00	180.00	110.00	85.00	20.00		11.90				
	LOCAL NUMBER PORTABILITY															
	Local Number Portability (1 per port)			UEPFB	LNPCX	0.35										
	INTEROFFICE TRANSPORT															
	Interoffice Transport - Dedicated - 2 Wire Voice Grade - Facility Termination			UEPFB	U1TV2	25.32	47.35	31.78								
	Interoffice Transport - Dedicated - 2 Wire Voice Grade - Per Mile or Fraction Mile			UEPFB	1L5XX	0.0091										
	FEATURES															
	All Features Offered			UEPFB	UEPVF	0.00	0.00	0.00				11.90				
	NONRECURRING CHARGES (NRCs) - CURRENTLY COMBINED															
	2-Wire Loop / Dedicated IO Transport / 2 Wire Line Port Combination - Conversion - Switch-as-is			UEPFB	USAC2		16.97	3.73				11.90				
	2-Wire Loop / Dedicated IO Transport / 2 Wire Line Port Combination - Conversion - Switch with change			UEPFB	USACC		16.97	3.73				11.90				
	2-WIRE VOICE GRADE LOOP WITH 2-WIRE LINE PORT (BUS - PBX)															
	UNE Port/Loop Combination Rates															
	2-Wire VG Loop/IO Tranport/Port Combo - Zone 1		1			26.24										
	2-Wire VG Loop/IO Tranport/Port Combo - Zone 2		2			31.40										
	2-Wire VG Loop/IO Tranport/Port Combo - Zone 3		3			44.87										
	UNE Loop Rates															
	2-Wire Voice Grade Loop (SL2) - Zone 1		1	UEPFP	UECF2	12.24										
	2-Wire Voice Grade Loop (SL2) - Zone 2		2	UEPFP	UECF2	17.40										
	2-Wire Voice Grade Loop (SL2) - Zone 3		3	UEPFP	UECF2	30.87										
	2-Wire Voice Grade Line Port Rates (BUS - PBX)															
	Line Side Unbundled Combination 2-Way PBX Trunk Port - Bus			UEPFP	UEPPC	14.00	180.00	110.00	85.00	20.00		11.90				
	Line Side Unbundled Outward PBX Trunk Port - Bus			UEPFP	UEPPO	14.00	180.00	110.00	85.00	20.00		11.90				
	Line Side Unbundled Incoming PBX Trunk Port - Bus			UEPFP	UEPP1	14.00	180.00	110.00	85.00	20.00		11.90				
	2-Wire Voice Unbundled PBX LD Terminal Ports			UEPFP	UEPLD	14.00	180.00	110.00	85.00	20.00		11.90				
	2-Wire Voice Unbundled 2-Way Combination PBX Usage Port			UEPFP	UEPXA	14.00	180.00	110.00	85.00	20.00		11.90				
	2-Wire Voice Unbundled PBX Toll Terminal Hotel Ports			UEPFP	UEPXB	14.00	180.00	110.00	85.00	20.00		11.90				
	2-Wire Voice Unbundled PBX LD DDD Terminals Port			UEPFP	UEPXC	14.00	180.00	110.00	85.00	20.00		11.90				
	2-Wire Voice Unbundled PBX LD Terminal Switchboard Port			UEPFP	UEPXD	14.00	180.00	110.00	85.00	20.00		11.90				
	2-Wire Voice Unbundled PBX LD Terminal Switchboard IDD Capable Port			UEPFP	UEPXE	14.00	180.00	110.00	85.00	20.00		11.90				
	2-Wire Voice Unbundled 2-Way PBX Hotel/Hospital Economy Administrative Calling Port			UEPFP	UEPXL	14.00	180.00	110.00	85.00	20.00		11.90				
	2-Wire Voice Unbundled 2-Way PBX Hotel/Hospital Economy Room Calling Port			UEPFP	UEPXM	14.00	180.00	110.00	85.00	20.00		11.90				
	2-Wire Voice Unbundled 1-Way Outgoing PBX Hotel/Hospital Discount Room Calling Port			UEPFP	UEPXO	14.00	180.00	110.00	85.00	20.00		11.90				
	2-Wire Voice Unbundled 1-Way Outgoing PBX Measured Port			UEPFP	UEPXS	14.00	180.00	110.00	85.00	20.00		11.90				
	LOCAL NUMBER PORTABILITY															
	Local Number Portability (1 per port)			UEPFP	LNPCP	3.15	0.00	0.00				11.90				
	INTEROFFICE TRANSPORT															

UNBUNDLED NETWORK ELEMENTS - Florida													Attachment: 2		Exhibit: B	
CATEGORY	RATE ELEMENTS	Interim	Zone	BCS	USOC	RATES ($)					Svc Order Submitted Elec per LSR	Svc Order Submitted Manually per LSR	Incremental Charge - Manual Svc Order vs. Electronic-1st	Incremental Charge - Manual Svc Order vs. Electronic-Add'l	Incremental Charge - Manual Svc Order vs. Electronic-Disc 1st	Incremental Charge - Manual Svc Order vs. Electronic-Disc Add'l
						Rec	Nonrecurring		Nonrecurring Disconnect		OSS Rates($)					
							First	Add'l	First	Add'l	SOMEC	SOMAN	SOMAN	SOMAN	SOMAN	SOMAN
	Interoffice Transport - Dedicated - 2 Wire Voice Grade - Facility Termination			UEPFP	U1TV2	25.32	47.35	31.78								
	Interoffice Transport - Dedicated - 2 Wire Voice Grade - Per Mile or Fraction Mile			UEPFP	1L5XX	0.0091										
FEATURES																
	All Features Offered			UEPFP	UEPVF	0.00	0.00	0.00				11.90				
NONRECURRING CHARGES (NRCs) - CURRENTLY COMBINED																
	2-Wire Loop / Dedicated IO Transport / 2 Wire Line Port Combination - Conversion - Switch-as-is			UEPFP	USAC2		16.97	3.73				11.90				
	2-Wire Loop / Dedicated IO Transport / 2 Wire Line Port Combination - Conversion - Switch with change			UEPFP	USACC		16.97	3.73				11.90				
UNBUNDLED PORT/LOOP COMBINATIONS - MARKET BASED RATES																
2-WIRE VOICE GRADE LOOP- BUS ONLY - WITH 2-WIRE DID TRUNK PORT																
UNE Port/Loop Combination Rates																
	2-Wire VG Loop/2-Wire DID Trunk Port Combo - UNE Zone 1		1			67.24										
	2-Wire VG Loop/2-Wire DID Trunk Port Combo - UNE Zone 2		2			72.40										
	2-Wire VG Loop/2-Wire DID Trunk Port Combo - UNE Zone 3		3			85.87										
UNE Loop Rates																
	2-Wire Analog Voice Grade Loop - (SL2) - UNE Zone 1		1	UEPPX	UECD1	12.24						11.90			1.83	
	2-Wire Analog Voice Grade Loop - (SL2) - UNE Zone 2		2	UEPPX	UECD1	17.40						11.90			1.83	
	2-Wire Analog Voice Grade Loop - (SL2) - UNE Zone 3		3	UEPPX	UECD1	30.87						11.90			1.83	
UNE Port Rate																
	Exchange Ports - 2-Wire DID Port			UEPPX	UEPD1	55.00	850.00	75.00				11.90			1.83	
NONRECURRING CHARGES - CURRENTLY COMBINED																
	2-Wire Voice Grade Loop / 2-Wire DID Trunk Port Combination - Switch-As-Is Top 8 MSAs only			UEPPX	USAC1		850.00	75.00				11.90				
	2-Wire Voice Grade Loop / 2-Wire DID Trunk Port Conversion with BellSouth Allowable Changes Top 8 MSAs only			UEPPX	USA1C		850.00	75.00				11.90				
ADDITIONAL NRCs																
	2-Wire DID Subsequent Activity - Add Trunks, Per Trunk			UEPPX	USAS1		32.26	32.26				11.90				
Telephone Number/Trunk Group Establisment Charges																
	DID Trunk Termination (One Per Port)			UEPPX	NDT	0.00	0.00	0.00				11.90			1.83	
	DID Numbers, Establish Trunk Group and Provide First Group of 20 DID Numbers			UEPPX	NDZ	0.00	0.00	0.00				11.90			1.83	
	Additional DID Numbers for each Group of 20 DID Numbers			UEPPX	ND4	0.00	0.00	0.00				11.90			1.83	
	DID Numbers, Non- consecutive DID Numbers , Per Number			UEPPX	ND5	0.00	0.00	0.00				11.90			1.83	
	Reserve Non-Consecutive DID numbers			UEPPX	ND6	0.00	0.00	0.00				11.90			1.83	
	Reserve DID Numbers			UEPPX	NDV	0.00	0.00	0.00				11.90			1.83	
LOCAL NUMBER PORTABILITY																
	Local Number Portability (1 per port)			UEPPX	LNPCP	3.15	0.00	0.00								
2-WIRE ISDN DIGITAL GRADE LOOP WITH 2-WIRE ISDN DIGITAL LINE SIDE PORT																
UNE Port/Loop Combination Rates																
	2W ISDN Digital Grade Loop/2W ISDN Digital Line Side Port - UNE Zone 1		1	UEPPB UEPPR		85.25										
	2W ISDN Digital Grade Loop/2W ISDN Digital Line Side Port - UNE Zone 2		2	UEPPB UEPPR		91.67										
	2W ISDN Digital Grade Loop/2W ISDN Digital Line Side Port - UNE Zone 3		3	UEPPB UEPPR		108.46										
UNE Loop Rates																
	2-Wire ISDN Digital Grade Loop - UNE Zone 1		1	UEPPB UEPPR	USL2X	15.25						11.90			1.83	
	2-Wire ISDN Digital Grade Loop - UNE Zone 2		2	UEPPB UEPPR	USL2X	21.67						11.90			1.83	
	2-Wire ISDN Digital Grade Loop - UNE Zone 3		3	UEPPB UEPPR	USL2X	38.46						11.90			1.83	
UNE Port Rate																
	Exchange Port - 2-Wire ISDN Line Side Port			UEPPB UEPPR	UEPPB	70.00	525.00	400.00				11.09			1.83	
NONRECURRING CHARGES - CURRENTLY COMBINED																
	2-Wire ISDN Digital Grade Loop / 2-Wire ISDN Line Side Port Combination - Conversion - Top 8 MSAs only			UEPPB UEPPR	USACB	0.00	215.00	215.00				11.90			1.83	
ADDITIONAL NRCs																

UNBUNDLED NETWORK ELEMENTS - Florida

CATEGORY	RATE ELEMENTS	Interim	Zone	BCS	USOC	RATES ($) Rec	Nonrecurring First	Nonrecurring Add'l	Nonrecurring Disconnect First	Nonrecurring Disconnect Add'l	Svc Order Submitted Elec per LSR SOMEC	Svc Order Submitted Manually per LSR SOMAN	Attachment: 2 Incremental Charge - Manual Svc Order vs. Electronic-1st SOMAN	Attachment: 2 Incremental Charge - Manual Svc Order vs. Electronic-Add'l SOMAN	Exhibit: B Incremental Charge - Manual Svc Order vs. Electronic-Disc 1st SOMAN	Exhibit: B Incremental Charge - Manual Svc Order vs. Electronic-Disc Add'l SOMAN
							OSS Rates($)									
	LOCAL NUMBER PORTABILITY															
	Local Number Portability (1 per port)			UEPPB UEPPR	LNPCX	0.35	0.00	0.00								
	B-CHANNEL USER PROFILE ACCESS:															
	CVS/CSD (DMS/5ESS)			UEPPB UEPPR	U1UCA	0.00	0.00	0.00								
	CVS (EWSD)			UEPPB UEPPR	U1UCB	0.00	0.00	0.00								
	CSD			UEPPB UEPPR	U1UCC	0.00	0.00	0.00								
	B-CHANNEL AREA PLUS USER PROFILE ACCESS: (AL,KY,LA,MS SC,MS, & TN)															
	USER TERMINAL PROFILE															
	User Terminal Profile (EWSD only)			UEPPB UEPPR	U1UMA	0.00	0.00	0.00								
	VERTICAL FEATURES															
	All Vertical Features - One per Channel B User Profile			UEPPB UEPPR	UEPVF	2.26	0.00	0.00				11.90				
	INTEROFFICE CHANNEL MILEAGE															
	Interoffice Channel mileage each, including first mile and facilities termination			UEPPB UEPPR	M1GNC	18.4491	47.35	31.78	18.31	7.03		11.90			1.83	
	Interoffice Channel mileage each, additional mile			UEPPB UEPPR	M1GNM	0.0091	0.00	0.00				11.90			1.83	
	4-WIRE DS1 DIGITAL LOOP WITH 4-WIRE ISDN DS1 DIGITAL TRUNK PORT															
	UNE Port/Loop Combination Rates															
	4W DS1 Digital Loop/4W ISDN DS1 Digital Trunk Port - UNE Zone 1		1	UEPPP		970.74										
	4W DS1 Digital Loop/4W ISDN DS1 Digital Trunk Port - UNE Zone 2		2	UEPPP		1,000.54										
	4W DS1 Digital Loop/4W ISDN DS1 Digital Trunk Port - UNE Zone 3		3	UEPPP		1,078.39										
	UNE Loop Rates															
	4-Wire DS1 Digital Loop - UNE Zone 1		1	UEPPP	USL4P	70.74						11.90			1.83	
	4-Wire DS1 Digital Loop - UNE Zone 2		2	UEPPP	USL4P	100.54						11.90			1.83	
	4-Wire DS1 Digital Loop - UNE Zone 3		3	UEPPP	USL4P	178.39						11.90			1.83	
	UNE Port Rate															
	Exchange Ports - 4-Wire ISDN DS1 Port			UEPPP	UEPPP	900.00	1,150.00	1,150.00				11.90			1.83	
	NONRECURRING CHARGES - CURRENTLY COMBINED															
	4-Wire DS1 Digital Loop / 4-Wire ISDN DS1 Digital Trunk Port Combination - Conversion -Switch-As-Is Top 8 MSAs only			UEPPP	USACP	0.00	925.00	925.00				11.90			1.83	
	ADDITIONAL NRCs															
	4-Wire DS1 Loop/4-W ISDN Digtl Trk Port - Subsqt Actvy-Inward/two way Telephone Numbers (except NC)			UEPPP	PR7TF		0.5412					11.90			1.83	
	4-Wire DS1 Loop / 4-Wire ISDN DS1 Digital Trunk Port - Outward Tel Numbers (All States except NC)			UEPPP	PR7TO		12.71	12.71				11.90			1.83	
	4-Wire DS1 Loop / 4-Wire ISDN DS1 Digital Trk Port - Subsequent Inward Telephone Numbers			UEPPP	PR7ZT		25.42	25.42				11.90			1.83	
	LOCAL NUMBER PORTABILITY															
	Local Number Portability (1 per port)			UEPPP	LNPCN	1.75										
	INTERFACE (Provsioning Only)															
	Voice/Data			UEPPP	PR71V	0.00	0.00	0.00								
	Digital Data			UEPPP	PR71D	0.00	0.00	0.00								
	Inward Data			UEPPP	PR71E	0.00	0.00	0.00								
	New or Additional "B" Channel															
	New or Additional - Voice/Data B Channel			UEPPP	PR7BV	0.00	20.00					11.90			1.83	
	New or Additional - Digital Data B Channel			UEPPP	PR7BF	0.00	20.00					11.90			1.83	
	New or Additional Inward Data B Channel			UEPPP	PR7BD	0.00	20.00					11.90			1.83	
	CALL TYPES															
	Inward			UEPPP	PR7C1	0.00	0.00	0.00								
	Outward			UEPPP	PR7CO	0.00	0.00	0.00								
	Two-way			UEPPP	PR7CC	0.00	0.00	0.00								
	Interoffice Channel Mileage															
	Fixed Each Including First Mile			UEPPP	1LN1A	88.6256	105.54	98.47	21.47	19.05		11.90			1.93	
	Each Airline-Fractional Additional Mile			UEPPP	1LN1B	0.1856										
	4-WIRE DS1 DIGITAL LOOP WITH 4-WIRE DDITS TRUNK PORT															
	UNE Port/Loop Combination Rates															
	4W DS1 Digital Loop/4W DDITS Trunk Port - UNE Zone 1		1	UEPDC		820.74						11.90			1.83	

UNBUNDLED NETWORK ELEMENTS - Florida														Attachment: 2		Exhibit: B	
CATEGORY	RATE ELEMENTS	Interim	Zone	BCS	USOC	RATES ($)					Svc Order Submitted Elec per LSR	Svc Order Submitted Manually per LSR	Incremental Charge - Manual Svc Order vs. Electronic-1st	Incremental Charge - Manual Svc Order vs. Electronic-Add'l	Incremental Charge - Manual Svc Order vs. Electronic-Disc 1st	Incremental Charge - Manual Svc Order vs. Electronic-Disc Add'l
						Rec	Nonrecurring		Nonrecurring Disconnect		OSS Rates($)					
							First	Add'l	First	Add'l	SOMEC	SOMAN	SOMAN	SOMAN	SOMAN	SOMAN
	4W DS1 Digital Loop/4W DDITS Trunk Port - UNE Zone 2		2	UEPDC		850.54						11.90			1.83	
	4W DS1 Digital Loop/4W DDITS Trunk Port - UNE Zone 3		3	UEPDC		928.39						11.90			1.83	
UNE Loop Rates																
	4-Wire DS1 Digital Loop - UNE Zone 1		1	UEPDC	USLDC	70.74						11.90			1.83	
	4-Wire DS1 Digital Loop - UNE Zone 2		2	UEPDC	USLDC	100.54						11.90			1.83	
	4-Wire DS1 Digital Loop - UNE Zone 3		3	UEPDC	USLDC	178.39						11.90			1.83	
UNE Port Rate																
	4-Wire DDITS Digital Trunk Port			UEPDC	UDD1T	750.00	1,019.56	479.87	204.92	20.10		11.90			1.83	
NONRECURRING CHARGES - CURRENTLY COMBINED																
	4-Wire DS1 Digital Loop / 4-Wire DDITS Trunk Port Combination - Switch-As-Is Top 8 MSAs only			UEPDC	USAC4		95.31	46.71				11.90			1.83	
	4-Wire DS1 Digital Loop / 4-Wire DDITS Trunk Port Combination - Conversion with DS1 Changes Top 8 MSAs only			UEPDC	USAWA		95.31	46.71				11.90			1.83	
	4-Wire DS1 Digital Loop / 4-Wire DDITS Trunk Port Combination - Conversion with Change - Trunk Top 8 MSAs only			UEPDC	USAWB		95.31	46.71				11.90			1.83	
ADDITIONAL NRCs																
	4-Wire DS1 Loop / 4-Wire DDITS Trunk Port - NRC - Subsequent Channel Activation/Chan - 2-Way Trunk			UEPDC	UDTTA		15.69	15.69				11.90			1.83	
	4-Wire DS1 Loop / 4-Wire DDITS Trunk Port - Subsequent Channel Activation/Chan - 1-Way Outward Trunk			UEPDC	UDTTB		15.69	15.69				11.90			1.83	
	4-Wire DS1 Loop / 4-Wire DDITS Trunk Port - Subsqnt Channel Activation/Chan Inward Trunk w/out DID			UEPDC	UDTTC		15.69	15.69				11.90			1.83	
	4-Wire DS1 Loop / 4-Wire DDITS Trunk Port - Subsqnt Chan Activation Per Chan - Inward Trunk with DID			UEPDC	UDTTD		15.69	15.69				11.90			1.83	
	4-Wire DS1 Loop / 4-Wire DDITS Trunk Port - Subsqnt Chan Activation / Chan - 2-Way DID w User Trans			UEPDC	UDTTE		15.69	15.69				11.90			1.83	
BIPOLAR 8 ZERO SUBSTITUTION																
	B8ZS -Superframe Format			UEPDC	CCOSF		0.00	655.00				11.90			1.83	
	B8ZS - Extended Superframe Format			UEPDC	CCOEF		0.00	655.00				11.90			1.83	
Alternate Mark Inversion																
	AMI -Superframe Format			UEPDC	MCOSF		0.00	0.00								
	AMI - Extended SuperFrame Format			UEPDC	MCOPO		0.00	0.00								
Telephone Number/Trunk Group Establisment Charges																
	Telephone Number for 2-Way Trunk Group			UEPDC	UDTGX	0.00						11.90			1.83	
	Telephone Number for 1-Way Outward Trunk Group			UEPDC	UDTGY	0.00						11.90			1.83	
	Telephone Number for 1-Way Inward Trunk Group Without DID			UEPDC	UDTGZ	0.00						11.90			1.83	
	DID Numbers, Establish Trunk Group and Provide First Group of 20 DID Numbers			UEPDC	NDZ	0.00	0.00	0.00				11.90			1.83	
	DID Numbers for each Group of 20 DID Numbers			UEPDC	ND4	0.00						11.90			1.83	
	DID Numbers, Non- consecutive DID Numbers , Per Number			UEPDC	ND5	0.00						11.90			1.83	
	Reserve Non-Consecutive DID Nos.			UEPDC	ND6	0.00	0.00	0.00				11.90			1.83	
	Reserve DID Numbers			UEPDC	NDV	0.00	0.00	0.00				11.90			1.83	
Dedicated DS1 (Interoffice Channel Mileage) -																
FX/FCO for 4-Wire DS1 Digital Loop with 4-Wire DDITS Trunk Port																
	Interoffice Channel Mileage - Fixed rate 0-8 miles (Facilities Termination)			UEPDC	1LNO1	88.44	105.54	98.47	21.47	19.05		11.90			1.83	
	Interoffice Channel Mileage - Additional rate per mile - 0-8 miles			UEPDC	1LNOA	0.1856	0.00	0.00								
	Interoffice Channel Mileage - Fixed rate 9-25 miles (Facilities Termination)			UEPDC	1LNO2	0.00	0.00	0.00								
	Interoffice Channel Mileage - Additional rate per mile - 9-25 miles			UEPDC	1LNOB	0.1856	0.00	0.00								
	Interoffice Channel Mileage - Fixed rate 25+ miles (Facilities Termination)			UEPDC	1LNO3	0.00	0.00	0.00	0.00							
	Interoffice Channel Mileage - Additional rate per mile - 25+ miles			UEPDC	1LNOC	0.1856	0.00	0.00								
	Local Number Portability, per DS0 Activated			UEPDC	LNPCP	3.15	0.00	0.00	0.00							

CATEGORY	RATE ELEMENTS	Interim	Zone	BCS	USOC	RATES ($)					Svc Order Submitted Elec per LSR	Svc Order Submitted Manually per LSR	Attachment: 2 Incremental Charge - Manual Svc Order vs. Electronic-1st	Attachment: 2 Incremental Charge - Manual Svc Order vs. Electronic-Add'l	Exhibit: B Incremental Charge - Manual Svc Order vs. Electronic-Disc 1st	Exhibit: B Incremental Charge - Manual Svc Order vs. Electronic-Disc Add'l
						Rec	Nonrecurring		Nonrecurring Disconnect		OSS Rates($)					
							First	Add'l	First	Add'l	SOMEC	SOMAN	SOMAN	SOMAN	SOMAN	SOMAN
	Central Office Termininating Point			UEPDC	CTG	0.00										
	4-WIRE DS1 LOOP WITH CHANNELIZATION WITH PORT															
	System is 1 DS1 Loop, 1 D4 Channel Bank, and up to 24 Feature Activations															
	A system can have various rate combinations based on type and number of ports used															
	UNE DS1 Loop															
	4-Wire DS1 Loop - UNE Zone 1		1	UEPMG	USLDC	70.74	0.00	0.00								
	4-Wire DS1 Loop - UNE Zone 2		2	UEPMG	USLDC	100.54	0.00	0.00								
	4-Wire DS1 Loop - UNE Zone 3		3	UEPMG	USLDC	178.39	0.00	0.00								
	UNE DSO Channelization Capacities (D4 Channel Bank Configurations)															
	24 DSO Channel Capacity - 1 per DS1			UEPMG	VUM24	118.06	0.00	0.00				11.90			1.83	
	48 DSO Channel Capacity - 1 per 2 DS1s			UEPMG	VUM48	236.12	0.00	0.00				11.90			1.83	
	96 DSO Channel Capacity -1per 4 DS1s			UEPMG	VUM96	472.24	0.00	0.00				11.90			1.83	
	144 DS0 Channel Capacity - 1 per 6 DS1s			UEPMG	VUM14	708.36	0.00	0.00				11.90			1.83	
	192 DS0 Channel Capacity -1 per 8 DS1s			UEPMG	VUM19	944.48	0.00	0.00				11.90			1.83	
	240 DS0 Channel Capacity - 1 per 10 DS1s			UEPMG	VUM2O	1,180.60	0.00	0.00				11.90			1.83	
	288 DS0 Channel Capacity - 1 per 12 DS1s			UEPMG	VUM28	1,416.72	0.00	0.00				11.90			1.83	
	384 DS0 Channel Capacity - 1 per 16 DS1s			UEPMG	VUM38	1,888.96	0.00	0.00				11.90			1.83	
	480 DS0 Channel Capacity - 1 per 20 DS1s			UEPMG	VUM4O	2,361.20	0.00	0.00				11.90			1.83	
	576 DS0 Channel Capacity -1 per 24 DS1s			UEPMG	VUM57	2,833.44	0.00	0.00				11.90			1.83	
	672 DS0 Channel Capacity - 1 per 28 DS1s			UEPMG	VUM67	3,305.68	0.00	0.00				11.90			1.83	
	Non-Recurring Charges (NRC) Associated with 4-Wire DS1 Loop with Channeliztion with Port - Conversion Charge Based on a System															
	A Minimum System configuration is One (1) DS1, One (1) D4 Channel Bank, and Up To 24 DSO Ports with Feature Activations.															
	Multiples of this configuration functioning as one are considered Add'l after the minimum system configuration is counted.															
	NRC - Conversion (Currently Combined) with or without BellSouth Allowed Changes - Top 8 MSAs Only			UEPMG	USAC4	0.00	450.00	50.00				11.90				
	System Additions Where Currently Combined and New (Not Currently Combined)															
	In Density Zone 1 Top 8 MSAs															
	1 DS1/D4 Channel Bank - Add NRC for each Port and Assoc Fea Activation -			UEPMG	VUMD4	0.00	950.00	600.00	200.00	30.00		11.90				
	Bipolar 8 Zero Substitution															
	Clear Channel Capability Format, superframe - Subsequent Activity Only			UEPMG	CCOSF	0.00	0.00	655.00				11.90				
	Clear Channel Capability Format - Extended Superframe - Subsequent Activity Only			UEPMG	CCOEF	0.00	0.00	655.00				11.90				
	Alternate Mark Inversion (AMI)															
	Superframe Format			UEPMG	MCOSF	0.00	0.00	0.00								
	Extended Superframe Format			UEPMG	MCOPO	0.00	0.00	0.00								
	Exchange Ports Associated with 4-Wire DS1 Loop with Channelization with Port															
	Exchange Ports															
	Line Side Combination Channelized PBX Trunk Port - Business			UEPPX	UEPCX	14.00	0.00	0.00	0.00	0.00		11.90			1.83	
	Line Side Outward Channelized PBX Trunk Port - Business			UEPPX	UEPOX	14.00	0.00	0.00	0.00	0.00		11.90			1.83	
	Line Side Inward Only Channelized PBX Trunk Port without DID			UEPPX	UEP1X	14.00	0.00	0.00	0.00	0.00		11.90			1.83	
	2-Wire Trunk Side Unbundled Channelized DID Trunk Port			UEPPX	UEPDM	55.00	0.00	0.00	0.00	0.00		11.90			1.83	
	Feature Activations - Unbundled Loop Concentration															
	Feature (Service) Activation for each Line Port Terminated in D4 Bank			UEPPX	1PQWM	0.66	40.00	20.00	6.00	5.00		11.90			1.83	
	Feature (Service) Activation for each Trunk Port Terminated in D4 Bank			UEPPX	1PQWU	0.66	110.00	30.00	65.00	20.00		11.90			1.83	
	Telephone Number/ Group Establishment Charges for DID Service															
	DID Trunk Termination (1 per Port)			UEPPX	NDT	0.00	0.00	0.00				11.90				
	Estab Trk Grp and Provide 1st 20 DID Nos. (FL,GA, NC,& SC)			UEPPX	NDZ	0.00	0.00	0.00				11.90				
	DID Numbers - groups of 20 - Valid all States			UEPPX	ND4	0.00	0.00	0.00				11.90				
	Non-Consecutive DID Numbers - per number			UEPPX	ND5	0.00	0.00	0.00				11.90				
	Reserve Non-Consecutive DID Numbers			UEPPX	ND6	0.00	0.00	0.00				11.90				
	Reserve DID Numbers			UEPPX	NDV	0.00	0.00	0.00				11.90				
	Local Number Portability															
	Local Number Portability - 1 per port			UEPPX	LNPCP	3.15	0.00	0.00								

UNBUNDLED NETWORK ELEMENTS - Florida													Attachment: 2		Exhibit: B	
CATEGORY	RATE ELEMENTS	Interim	Zone	BCS	USOC	RATES ($)					Svc Order Submitted Elec per LSR	Svc Order Submitted Manually per LSR	Incremental Charge - Manual Svc Order vs. Electronic-1st	Incremental Charge - Manual Svc Order vs. Electronic-Add'l	Incremental Charge - Manual Svc Order vs. Electronic-Disc 1st	Incremental Charge - Manual Svc Order vs. Electronic-Disc Add'l
						Rec	Nonrecurring		Nonrecurring Disconnect		OSS Rates($)					
							First	Add'l	First	Add'l	SOMEC	SOMAN	SOMAN	SOMAN	SOMAN	SOMAN
	FEATURES - Vertical and Optional															
	Local Switching Features Offered with Line Side Ports Only															
	All Features Available			UEPPX	UEPVF	2.26	0.00	0.00				11.90			1.83	
UNBUNDLED CENTREX PORT/LOOP COMBINATIONS - COST BASED RATES																
	1. Cost Based Rates are applied where BellSouth is required by FCC and/or State Commission rule to provide Unbundled Local Switching or Switch Ports.															
	2. Features shall apply to the Unbundled Port/Loop Combination - Cost Based Rate section in the same manner as they are applied to the Stand-Alone Unbundled Port section of this Rate Exhibit.															
	3. End Office and Tandem Switching Usage and Common Transport Usage rates in the Port section of this rate exhibit shall apply to all combinations of loop/port network elements except for UNE Coin Port/Loop Combinations.															
	4. The first and additional Port nonrecurring charges apply to Not Currently Combined Combos. For Currently Combined Combos, the nonrecurring charges shall be those identified in the Nonrecurring - Currently Combined sections. Additional NRCs may apply also and are categorized accordingly.															
	5. Market Rates for Unbundled Centrex Port/Loop Combination will be negotiated on an Individual Case Basis, until further notice.															
	UNE-P CENTREX - 1AESS - (Valid in AL,FL,GA,KY,LA,MS,&TN only)															
	2-Wire VG Loop/2-Wire Voice Grade Port (Centrex) Combo															
	UNE Port/Loop Combination Rates (Non-Design)															
	2-Wire VG Loop/2-Wire Voice Grade Port (Centrex) Port Combo - Non-Design		1	UEP91		10.94										
	2-Wire VG Loop/2-Wire Voice Grade Port (Centrex)Port Combo - Non-Design		2	UEP91		15.05										
	2-Wire VG Loop/2-Wire Voice Grade Port (Centrex)Port Combo - Non-Design		3	UEP91		25.80										
	UNE Port/Loop Combination Rates (Design)															
	2-Wire VG Loop/2-Wire Voice Grade Port (Centrex) Port Combo - Design		1	UEP91		13.41										
	2-Wire VG Loop/2-Wire Voice Grade Port (Centrex)Port Combo - Design		2	UEP91		18.57										
	2-Wire VG Loop/2-Wire Voice Grade Port (Centrex)Port Combo - Design		3	UEP91		32.04										
	UNE Loop Rate															
	2-Wire Voice Grade Loop (SL 1) - Zone 1		1	UEP91	UECS1	9.77										
	2-Wire Voice Grade Loop (SL 1) - Zone 2		2	UEP91	UECS1	13.88										
	2-Wire Voice Grade Loop (SL 1) - Zone 3		3	UEP91	UECS1	24.63										
	2-Wire Voice Grade Loop (SL 2) - Zone 1		1	UEP91	UECS2	12.24										
	2-Wire Voice Grade Loop (SL 2) - Zone 2		2	UEP91	UECS2	17.40										
	2-Wire Voice Grade Loop (SL 2) - Zone 3		3	UEP91	UECS2	30.87										
	UNE Ports															
	All States (Except North Carolina and Sout Carolina)															
	2-Wire Voice Grade Port (Centrex) Basic Local Area			UEP91	UEPYA	1.17	53.31	26.46	27.50	8.37		11.90				
	2-Wire Voice Grade Port (Centrex 800 termination)Basic Local Area			UEP91	UEPYB	1.17	53.31	26.46	27.50	8.37		11.90				
	2-Wire Voice Grade Port (Centrex with Caller ID)1Basic Local Area			UEP91	UEPYH	1.17	53.31	26.46	27.50	8.37		11.90				
	2-Wire Voice Grade Port (Centrex from diff Serving Wire Center)2 Basic Local Area			UEP91	UEPYM	1.17	139.49	86.10	65.41	13.81		11.90				
	2-Wire Voice Grade Port, Diff Serving Wire Center - 800 Service Term - Basic Local Area			UEP91	UEPYZ	1.17	139.49	86.10	65.41	13.81		11.90				
	2-Wire Voice Grade Port terminated in on Megalink or equivalent - Basic Local Area			UEP91	UEPY9	1.17	53.31	26.46	27.50	8.37		11.90				
	2-Wire Voice Grade Port Terminated on 800 Service Term - Basic Local Area			UEP91	UEPY2	1.17	53.31	26.46	27.50	8.37		11.90				
	Georgia and Florida Only															
	2-Wire Voice Grade Port (Centrex)			UEP91	UEPHA	1.17	53.31	26.46	27.50	8.37		11.90				
	2-Wire Voice Grade Port (Centrex 800 termination)			UEP91	UEPHB	1.17	53.31	26.46	27.50	8.37		11.90				
	2-Wire Voice Grade Port (Centrex with Caller ID)1			UEP91	UEPHH	1.17	53.31	26.46	27.50	8.37		11.90				
	2-Wire Voice Grade Port (Centrex from diff Serving Wire Center)2			UEP91	UEPHM	1.17	139.49	86.10	65.41	13.81		11.90				
	2-Wire Voice Grade Port, Diff Serving Wire Center - 800 Service Term			UEP91	UEPHZ	1.17	139.49	86.10	65.41	13.81		11.90				
	2-Wire Voice Grade Port terminated in on Megalink or equivalent			UEP91	UEPH9	1.17	53.31	26.46	27.50	8.37		11.90				
	2-Wire Voice Grade Port Terminated on 800 Service Term			UEP91	UEPH2	1.17	53.31	26.46	27.50	8.37		11.90				

UNBUNDLED NETWORK ELEMENTS - Florida													Attachment: 2		Exhibit: B	
CATEGORY	RATE ELEMENTS	Interim	Zone	BCS	USOC	RATES ($)					Svc Order Submitted Elec per LSR	Svc Order Submitted Manually per LSR	Incremental Charge - Manual Svc Order vs. Electronic-1st	Incremental Charge - Manual Svc Order vs. Electronic-Add'l	Incremental Charge - Manual Svc Order vs. Electronic-Disc 1st	Incremental Charge - Manual Svc Order vs. Electronic-Disc Add'l
						Rec	Nonrecurring		Nonrecurring Disconnect		OSS Rates($)					
							First	Add'l	First	Add'l	SOMEC	SOMAN	SOMAN	SOMAN	SOMAN	SOMAN
Local Switching																
	Centrex Intercom Funtionality, per port			UEP91	URECS	0.7384										
Local Number Portability																
	Local Number Portability (1 per port)			UEP91	LNPCC	0.35										
Features																
	All Standard Features Offered, per port			UEP91	UEPVF	2.26						11.90				
	All Select Features Offered, per port			UEP91	UEPVS	0.00	370.70					11.90				
	All Centrex Control Features Offered, per port			UEP91	UEPVC	2.26						11.90				
NARS																
	Unbundled Network Access Register - Combination			UEP91	UARCX	0.00	0.00	0.00				11.90				
	Unbundled Network Access Register - Indial			UEP91	UAR1X	0.00	0.00	0.00				11.90				
	Unbundled Network Access Register - Outdial			UEP91	UAROX	0.00	0.00	0.00				11.90				
Miscellaneous Terminations																
2-Wire Trunk Side																
	Trunk Side Terminations, each			UEP91	CENA6	8.73										
Interoffice Channel Mileage - 2-Wire																
	Interoffice Channel Facilities Termination - Voice Grade			UEP91	M1GBC	25.32										
	Interoffice Channel mileage, per mile or fraction of mile			UEP91	M1GBM	0.0091										
Feature Activations (DS0) Centrex Loops on Channelized DS1 Service																
D4 Channel Bank Feature Activations																
	Feature Activation on D-4 Channel Bank Centrex Loop Slot			UEP91	1PQWS	0.66										
	Feature Activation on D-4 Channel Bank FX line Side Loop Slot			UEP91	1PQW6	0.66										
	Feature Activation on D-4 Channel Bank FX Trunk Side Loop Slot			UEP91	1PQW7	0.66										
	Feature Activation on D-4 Channel Bank Centrex Loop Slot - Different Wire Center			UEP91	1PQWP	0.66										
	Feature Activation on D-4 Channel Bank Private Line Loop Slot			UEP91	1PQWV	0.66										
	Feature Activation on D-4 Channel Bank Tjie Line/Trunk Loop Slot			UEP91	1PQWQ	0.66										
	Feature Activation on D-4 Channel Bank WATS Loop Slot			UEP91	1PQWA	0.66										
Non-Recurring Charges (NRC) Associated with UNE-P Centrex																
	Conversion - Currently Combined Switch-As-Is with allowed changes, per port			UEP91	USAC2		21.50	8.42				11.90				
	Conversion of Existing Centrex Common Block			UEP91	USACN		5.17	8.32				11.90				
	New Centrex Standard Common Block			UEP91	M1ACS	0.00	618.82					11.90				
	New Centrex Customized Common Block			UEP91	M1ACC	0.00	618.82					11.90				
	Secondary Block, per Block			UEP91	M2CC1	0.00	71.31					11.90				
	NAR Establishment Charge, Per Occasion			UEP91	URECA	0.00	66.48					11.90				
UNE-P CENTREX - 5ESS (Valid in All States)																
2-Wire VG Loop/2-Wire Voice Grade Port (Centrex) Combo																
UNE Port/Loop Combination Rates (Non-Design)																
	2-Wire VG Loop/2-Wire Voice Grade Port (Centrex) Port Combo - Non-Design		1	UEP95		10.94										
	2-Wire VG Loop/2-Wire Voice Grade Port (Centrex)Port Combo - Non-Design		2	UEP95		15.05										
	2-Wire VG Loop/2-Wire Voice Grade Port (Centrex)Port Combo - Non-Design		3	UEP95		25.80										
UNE Port/Loop Combination Rates (Design)																
	2-Wire VG Loop/2-Wire Voice Grade Port (Centrex) Port Combo - Design		1	UEP95		13.41										
	2-Wire VG Loop/2-Wire Voice Grade Port (Centrex)Port Combo - Design		2	UEP95		18.57										
	2-Wire VG Loop/2-Wire Voice Grade Port (Centrex)Port Combo - Design		3	UEP95		32.04										
UNE Loop Rate																
	2-Wire Voice Grade Loop (SL 1) - Zone 1		1	UEP95	UECS1	9.77										
	2-Wire Voice Grade Loop (SL 1) - Zone 2		2	UEP95	UECS1	13.88										

UNBUNDLED NETWORK ELEMENTS - Florida														Attachment: 2		Exhibit: B	
CATEGORY		RATE ELEMENTS	Interim	Zone	BCS	USOC	RATES ($)					Svc Order Submitted Elec per LSR	Svc Order Submitted Manually per LSR	Incremental Charge - Manual Svc Order vs. Electronic-1st	Incremental Charge - Manual Svc Order vs. Electronic-Add'l	Incremental Charge - Manual Svc Order vs. Electronic-Disc 1st	Incremental Charge - Manual Svc Order vs. Electronic-Disc Add'l
							Rec	Nonrecurring		Nonrecurring Disconnect		OSS Rates($)					
								First	Add'l	First	Add'l	SOMEC	SOMAN	SOMAN	SOMAN	SOMAN	SOMAN
		2-Wire Voice Grade Loop (SL 1) - Zone 3		3	UEP95	UECS1	24.63										
		2-Wire Voice Grade Loop (SL 2) - Zone 1		1	UEP95	UECS2	12.24										
		2-Wire Voice Grade Loop (SL 2) - Zone 2		2	UEP95	UECS2	17.40										
		2-Wire Voice Grade Loop (SL 2) - Zone 3		3	UEP95	UECS2	30.87										
	UNE Port Rate																
	All States																
		2-Wire Voice Grade Port (Centrex) Basic Local Area			UEP95	UEPYA	1.17	53.31	26.46	27.50	8.37		11.90				
		2-Wire Voice Grade Port (Centrex 800 termination)			UEP95	UEPYB	1.17	53.31	26.46	27.50	8.37		11.90				
		2-Wire Voice Grade Port (Centrex with Caller ID)1Basic Local Area			UEP95	UEPYH	1.17	53.31	26.46	27.50	8.37		11.90				
		2-Wire Voice Grade Port (Centrex from diff Serving Wire Center)2 Basic Local Area			UEP95	UEPYM	1.17	139.49	86.10	65.41	13.81		11.90				
		2-Wire Voice Grade Port, Diff Serving Wire Center - 800 Service Term - Basic Local Area			UEP95	UEPYZ	1.17	139.49	86.10	65.41	13.81		11.90				
		2-Wire Voice Grade Port terminated in on Megalink or equivalent - Basic Local Area			UEP95	UEPY9	1.17	53.31	26.46	27.50	8.37		11.90				
		2-Wire Voice Grade Port Terminated on 800 Service Term - Basic Local Area			UEP95	UEPY2	1.17	53.31	26.46	27.50	8.37		11.90				
	AL, KY, LA, MS, SC, & TN Only																
	FL & GA Only																
		2-Wire Voice Grade Port (Centrex)			UEP95	UEPHA	1.17	53.31	26.46	27.50	8.37		11.90				
		2-Wire Voice Grade Port (Centrex 800 termination)			UEP95	UEPHB	1.17	53.31	26.46	27.50	8.37		11.90				
		2-Wire Voice Grade Port (Centrex with Caller ID)1			UEP95	UEPHH	1.17	53.31	26.46	27.50	8.37		11.90				
		2-Wire Voice Grade Port (Centrex from diff Serving Wire Center)2			UEP95	UEPHM	1.17	139.49	86.10	65.41	13.81		11.90				
		2-Wire Voice Grade Port, Diff Serving Wire Center - 800 Service Term			UEP95	UEPHZ	1.17	139.49	86.10	65.41	13.81		11.90				
		2-Wire Voice Grade Port terminated in on Megalink or equivalent			UEP95	UEPH9	1.17	53.31	26.46	27.50	8.37		11.90				
		2-Wire Voice Grade Port Terminated on 800 Service Term			UEP95	UEPH2	1.17	53.31	26.46	27.50	8.37		11.90				
	Local Switching																
		Centrex Intercom Funtionality, per port			UEP95	URECS	0.7384										
	Local Number Portability																
		Local Number Portability (1 per port)			UEP95	LNPCC	0.35										
	Features																
		All Standard Features Offered, per port			UEP95	UEPVF	2.26										
		All Select Features Offered, per port			UEP95	UEPVS	0.00	370.70					11.90				
		All Centrex Control Features Offered, per port			UEP95	UEPVC	2.26										
	NARS																
		Unbundled Network Access Register - Combination			UEP95	UARCX	0.00	0.00	0.00				11.90				
		Unbundled Network Access Register - Indial			UEP95	UAR1X	0.00	0.00	0.00				11.90				
		Unbundled Network Access Register - Outdial			UEP95	UAROX	0.00	0.00	0.00				11.90				
	Miscellaneous Terminations																
	2-Wire Trunk Side																
		Trunk Side Terminations, each			UEP95	CEND6	8.73										
	4-Wire Digital (1.544 Megabits)																
		DS1 Circuit Terminations, each			UEP95	M1HD1	54.95										
		DS0 Channels Activated, each			UEP95	M1HDO	0.00	15.69					11.90				
	Interoffice Channel Mileage - 2-Wire																
		Interoffice Channel Facilities Termination			UEP95	M1GBC	25.32										
		Interoffice Channel mileage, per mile or fraction of mile			UEP95	M1GBM	0.0091										
	Feature Activations (DS0) Centrex Loops on Channelized DS1 Service																
	D4 Channel Bank Feature Activations																
		Feature Activation on D-4 Channel Bank Centrex Loop Slot			UEP95	1PQWS	0.66										
		Feature Activation on D-4 Channel Bank FX line Side Loop Slot			UEP95	1PQW6	0.66										
		Feature Activation on D-4 Channel Bank FX Trunk Side Loop Slot			UEP95	1PQW7	0.66										

UNBUNDLED NETWORK ELEMENTS - Florida														Attachment: 2		Exhibit: B	
CATEGORY		RATE ELEMENTS	Interim	Zone	BCS	USOC	RATES ($)					Svc Order Submitted Elec per LSR	Svc Order Submitted Manually per LSR	Incremental Charge - Manual Svc Order vs. Electronic-1st	Incremental Charge - Manual Svc Order vs. Electronic-Add'l	Incremental Charge - Manual Svc Order vs. Electronic-Disc 1st	Incremental Charge - Manual Svc Order vs. Electronic-Disc Add'l
							Rec	Nonrecurring		Nonrecurring Disconnect		OSS Rates($)					
								First	Add'l	First	Add'l	SOMEC	SOMAN	SOMAN	SOMAN	SOMAN	SOMAN
		Feature Activation on D-4 Channel Bank Centrex Loop Slot - Different Wire Center			UEP95	1PQWP	0.66										
		Feature Activation on D-4 Channel Bank Private Line Loop Slot			UEP95	1PQWV	0.66										
		Feature Activation on D-4 Channel Bank Tjie Line/Trunk Loop Slot			UEP95	1PQWQ	0.66										
		Feature Activation on D-4 Channel Bank WATS Loop Slot			UEP95	1PQWA	0.66										
	Non-Recurring Charges (NRC) Associated with UNE-P Centrex																
		NRC Conversion Currently Combined Switch-As-Is with allowed changes, per port			UEP95	USAC2	0.00	21.50	8.42				11.90				
		Conversion of Existing Centrex Common Block, each			UEP95	USACN		5.17	8.32				11.90				
		New Centrex Standard Common Block			UEP95	M1ACS	0.00	618.82					11.90				
		New Centrex Customized Common Block			UEP95	M1ACC	0.00	618.82					11.90				
		NAR Establishment Charge, Per Occasion			UEP95	URECA	0.00	66.48					11.90				
	UNE-P CENTREX - DMS100 (Valid in All States)																
	2-Wire VG Loop/2-Wire Voice Grade Port (Centrex) Combo																
	UNE Port/Loop Combination Rates (Non-Design)																
		2-Wire VG Loop/2-Wire Voice Grade Port (Centrex) Port Combo - Non-Design		1	UEP9D		10.94										
		2-Wire VG Loop/2-Wire Voice Grade Port (Centrex)Port Combo - Non-Design		2	UEP9D		15.05										
		2-Wire VG Loop/2-Wire Voice Grade Port (Centrex)Port Combo - Non-Design		3	UEP9D		25.80										
	UNE Port/Loop Combination Rates (Design)																
		2-Wire VG Loop/2-Wire Voice Grade Port (Centrex) Port Combo - Design		1	UEP9D		13.41										
		2-Wire VG Loop/2-Wire Voice Grade Port (Centrex)Port Combo - Design		2	UEP9D		18.57										
		2-Wire VG Loop/2-Wire Voice Grade Port (Centrex)Port Combo - Design		3	UEP9D		32.04										
	UNE Loop Rate																
		2-Wire Voice Grade Loop (SL 1) - Zone 1		1	UEP9D	UECS1	9.77										
		2-Wire Voice Grade Loop (SL 1) - Zone 2		2	UEP9D	UECS1	13.88										
		2-Wire Voice Grade Loop (SL 1) - Zone 3		3	UEP9D	UECS1	24.63										
		2-Wire Voice Grade Loop (SL 2) - Zone 1		1	UEP9D	UECS2	12.24										
		2-Wire Voice Grade Loop (SL 2) - Zone 2		2	UEP9D	UECS2	17.40										
		2-Wire Voice Grade Loop (SL 2) - Zone 3		3	UEP9D	UECS2	30.87										
	UNE Port Rate																
	ALL STATES																
		2-Wire Voice Grade Port (Centrex) Basic Local Area			UEP9D	UEPYA	1.17						11.90				
		2-Wire Voice Grade Port (Centrex 800 termination)Basic Local Area			UEP9D	UEPYB	1.17	53.31	26.46	27.50	8.37		11.90				
		2-Wire Voice Grade Port (Centrex / EBS-PSET)3Basic Local Area			UEP9D	UEPYC	1.17	53.31	26.46	27.50	8.37		11.90				
		2-Wire Voice Grade Port (Centrex / EBS-M5009)3Basic Local Area			UEP9D	UEPYD	1.17	53.31	26.46	27.50	8.37		11.90				
		2-Wire Voice Grade Port (Centrex / EBS-M5209))3 Basic Local Area			UEP9D	UEPYE	1.17	53.31	26.46	27.50	8.37		11.90				
		2-Wire Voice Grade Port (Centrex / EBS-M5112))3 Basic Local Area			UEP9D	UEPYF	1.17	53.31	26.46	27.50	8.37		11.90				
		2-Wire Voice Grade Port (Centrex / EBS-M5312))3Basic Local Area			UEP9D	UEPYG	1.17	53.31	26.46	27.50	8.37		11.90				
		2-Wire Voice Grade Port (Centrex / EBS-M5008))3 Basic Local Area			UEP9D	UEPYT	1.17	53.31	26.46	27.50	8.37		11.90				
		2-Wire Voice Grade Port (Centrex / EBS-M5208))3 Basic Local Area			UEP9D	UEPYU	1.17	53.31	26.46	27.50	8.37		11.90				
		2-Wire Voice Grade Port (Centrex / EBS-M5216))3 Basic Local Area			UEP9D	UEPYV	1.17	53.31	26.46	27.50	8.37		11.90				

CATEGORY		RATE ELEMENTS	Interim	Zone	BCS	USOC	RATES ($)					Svc Order Submitted Elec per LSR	Svc Order Submitted Manually per LSR	Attachment: 2 Incremental Charge - Manual Svc Order vs. Electronic-1st	Attachment: 2 Incremental Charge - Manual Svc Order vs. Electronic-Add'l	Exhibit: B Incremental Charge - Manual Svc Order vs. Electronic-Disc 1st	Exhibit: B Incremental Charge - Manual Svc Order vs. Electronic-Disc Add'l
							Rec	Nonrecurring		Nonrecurring Disconnect				OSS Rates($)			
								First	Add'l	First	Add'l	SOMEC	SOMAN	SOMAN	SOMAN	SOMAN	SOMAN
		2-Wire Voice Grade Port (Centrex / EBS-M5316))3 Basic Local Area			UEP9D	UEPY3	1.17	53.31	26.46	27.50	8.37		11.90				
		2-Wire Voice Grade Port (Centrex with Caller ID) Basic Local Area			UEP9D	UEPYH	1.17	53.31	26.46	27.50	8.37		11.90				
		2-Wire Voice Grade Port (Centrex/Caller ID/Msg Wtg Lamp Indication))3 Basic Local Area			UEP9D	UEPYW	1.17	53.31	26.46	27.50	8.37		11.90				
		2-Wire Voice Grade Port (Centrex/Msg Wtg Lamp Indication))3 Basic Local Area			UEP9D	UEPYJ	1.17	53.31	26.46	27.50	8.37		11.90				
		2-Wire Voice Grade Port (Centrex from diff Serving Wire Center) 2 Basic Local Area			UEP9D	UEPYM	1.17	53.31	26.46	27.50	8.37		11.90				
		2-Wire Voice Grade Port (Centrex/differ SWC /EBS-PSET)2, 3 Basic Local Area			UEP9D	UEPYO	1.17	53.31	26.46	27.50	8.37		11.90				
		2-Wire Voice Grade Port (Centrex/differ SWC /EBS-M5009)2, 3 Basic Local Area			UEP9D	UEPYP	1.17	53.31	26.46	27.50	8.37		11.90				
		2-Wire Voice Grade Port (Centrex/differ SWC /EBS-5209)2, 3 Basic Local Area			UEP9D	UEPYQ	1.17	139.49	86.10	65.41	13.81		11.90				
		2-Wire Voice Grade Port (Centrex/differ SWC /EBS-M5112)2, 3 Basic Local Area			UEP9D	UEPYR	1.17	139.49	86.10	65.41	13.81		11.90				
		2-Wire Voice Grade Port (Centrex/differ SWC /EBS-M5312)2, 3 Basic Local Area			UEP9D	UEPYS	1.17	139.49	86.10	65.41	13.81		11.90				
		2-Wire Voice Grade Port (Centrex/differ SWC /EBS-M5008)2, 3 Basic Local Area			UEP9D	UEPY4	1.17	139.49	86.10	65.41	13.81		11.90				
		2-Wire Voice Grade Port (Centrex/differ SWC /EBS-M5208)2, 3 Basic Local Area			UEP9D	UEPY5	1.17	139.49	86.10	65.41	13.81		11.90				
		2-Wire Voice Grade Port (Centrex/differ SWC /EBS-M5216)2, 3 Basic Local Area			UEP9D	UEPY6	1.17	139.49	86.10	65.41	13.81		11.90				
		2-Wire Voice Grade Port (Centrex/differ SWC /EBS-M5316)2, 3 Basic Local Area			UEP9D	UEPY7	1.17	139.49	86.10	65.41	13.81		11.90				
		2-Wire Voice Grade Port, Diff Serving Wire Center - 800 Service Term			UEP9D	UEPYZ	1.17	139.49	86.10	65.41	13.81		11.90				
		2-Wire Voice Grade Port terminated in on Megalink or equivalent Basic Local Area			UEP9D	UEPY9	1.17	53.31	26.46	27.50	8.37		11.90				
		2-Wire Voice Grade Port Terminated on 800 Service Term Basic Local Area			UEP9D	UEPY2	1.17	53.31	26.46	27.50	8.37		11.90				
	FL & GA Only																
		2-Wire Voice Grade Port (Centrex)			UEP9D	UEPHA	1.17	53.31	26.46	27.50	8.37		11.90				
		2-Wire Voice Grade Port (Centrex 800 termination)			UEP9D	UEPHB	1.17	53.31	26.46	27.50	8.37		11.90				
		2-Wire Voice Grade Port (Centrex / EBS-PSET)3			UEP9D	UEPHC	1.17	53.31	26.46	27.50	8.37		11.90				
		2-Wire Voice Grade Port (Centrex / EBS-M5009)3			UEP9D	UEPHD	1.17	53.31	26.46	27.50	8.37		11.90				
		2-Wire Voice Grade Port (Centrex / EBS-M5209)3			UEP9D	UEPHE	1.17	53.31	26.46	27.50	8.37		11.90				
		2-Wire Voice Grade Port (Centrex / EBS-M5112)3			UEP9D	UEPHF	1.17	53.31	26.46	27.50	8.37		11.90				
		2-Wire Voice Grade Port (Centrex / EBS-M5312)3			UEP9D	UEPHG	1.17	53.31	26.46	27.50	8.37		11.90				
		2-Wire Voice Grade Port (Centrex / EBS-M5008)3			UEP9D	UEPHT	1.17	53.31	26.46	27.50	8.37		11.90				
		2-Wire Voice Grade Port (Centrex / EBS-M5208)3			UEP9D	UEPHU	1.17	53.31	26.46	27.50	8.37		11.90				
		2-Wire Voice Grade Port (Centrex / EBS-M5216)3			UEP9D	UEPHV	1.17	53.31	26.46	27.50	8.37		11.90				
		2-Wire Voice Grade Port (Centrex / EBS-M5316)3			UEP9D	UEPH3	1.17	53.31	26.46	27.50	8.37		11.90				
		2-Wire Voice Grade Port (Centrex with Caller ID)			UEP9D	UEPHH	1.17	53.31	26.46	27.50	8.37		11.90				
		2-Wire Voice Grade Port (Centrex/Caller ID/Msg Wtg Lamp Indication)3			UEP9D	UEPHW	1.17	53.31	26.46	27.50	8.37		11.90				
		2-Wire Voice Grade Port (Centrex/Msg Wtg Lamp Indication)3			UEP9D	UEPHJ	1.17	53.31	26.46	27.50	8.37		11.90				
		2-Wire Voice Grade Port (Centrex from diff Serving Wire Center) 2			UEP9D	UEPHM	1.17	139.49	86.10	65.41	13.81		11.90				
		2-Wire Voice Grade Port (Centrex/differ SWC /EBS-PSET)2, 3			UEP9D	UEPHO	1.17	139.49	86.10	65.41	13.81		11.90				
		2-Wire Voice Grade Port (Centrex/differ SWC /EBS-M5009)2, 3			UEP9D	UEPHP	1.17	139.49	86.10	65.41	13.81		11.90				
		2-Wire Voice Grade Port (Centrex/differ SWC /EBS-5209)2, 3			UEP9D	UEPHQ	1.17	139.49	86.10	65.41	13.81		11.90				
		2-Wire Voice Grade Port (Centrex/differ SWC /EBS-M5112)2, 3			UEP9D	UEPHR	1.17	139.49	86.10	65.41	13.81		11.90				

UNBUNDLED NETWORK ELEMENTS - Florida														Attachment: 2		Exhibit: B	
CATEGORY		RATE ELEMENTS	Interim	Zone	BCS	USOC	RATES ($)					Svc Order Submitted Elec per LSR	Svc Order Submitted Manually per LSR	Incremental Charge - Manual Svc Order vs. Electronic-1st	Incremental Charge - Manual Svc Order vs. Electronic-Add'l	Incremental Charge - Manual Svc Order vs. Electronic-Disc 1st	Incremental Charge - Manual Svc Order vs. Electronic-Disc Add'l
							Rec	Nonrecurring		Nonrecurring Disconnect		OSS Rates($)					
								First	Add'l	First	Add'l	SOMEC	SOMAN	SOMAN	SOMAN	SOMAN	SOMAN
		2-Wire Voice Grade Port (Centrex/differ SWC /EBS-M5312)2, 3			UEP9D	UEPHS	1.17	139.49	86.10	65.41	13.81		11.90				
		2-Wire Voice Grade Port (Centrex/differ SWC /EBS-M5008)2, 3			UEP9D	UEPH4	1.17	139.49	86.10	65.41	13.81		11.90				
		2-Wire Voice Grade Port (Centrex/differ SWC /EBS-M5208)2, 3			UEP9D	UEPH5	1.17	139.49	86.10	65.41	13.81		11.90				
		2-Wire Voice Grade Port (Centrex/differ SWC /EBS-M5216)2, 3			UEP9D	UEPH6	1.17	139.49	86.10	65.41	13.81		11.90				
		2-Wire Voice Grade Port (Centrex/differ SWC /EBS-M5316)2, 3			UEP9D	UEPH7	1.17	139.49	86.10	65.41	13.81		11.90				
		2-Wire Voice Grade Port, Diff Serving Wire Center - 800 Service Term			UEP9D	UEPHZ	1.17	139.49	86.10	65.41	13.81		11.90				
		2-Wire Voice Grade Port terminated in on Megalink or equivalent			UEP9D	UEPH9	1.17	53.31	26.46	27.50	8.37		11.90				
		2-Wire Voice Grade Port Terminated on 800 Service Term			UEP9D	UEPH2	1.17	53.31	26.46	27.50	8.37		11.90				
	Local Switching																
		Centrex Intercom Funtionality, per port			UEP9D	URECS	0.7384										
	Local Number Portability																
		Local Number Portability (1 per port)			UEP9D	LNPCC	0.35										
	Features																
		All Standard Features Offered, per port			UEP9D	UEPVF	2.26										
		All Select Features Offered, per port			UEP9D	UEPVS	0.00	370.70					11.90				
		All Centrex Control Features Offered, per port			UEP9D	UEPVC	2.26										
	NARS																
		Unbundled Network Access Register - Combination			UEP9D	UARCX	0.00	0.00	0.00				11.90				
		Unbundled Network Access Register - Inward			UEP9D	UAR1X	0.00	0.00	0.00				11.90				
		Unbundled Network Access Register - Outdial			UEP9D	UAROX	0.00	0.00	0.00				11.90				
	Miscellaneous Terminations																
	2-Wire Trunk Side																
		Trunk Side Terminations, each			UEP9D	CEND6	8.73										
	4-Wire Digital (1.544 Megabits)																
		DS1 Circuit Terminations, each			UEP9D	M1HD1	54.95										
		DS0 Channels Activiated per Channel			UEP9D	M1HDO	0.00	15.69					11.90				
	Interoffice Channel Mileage - 2-Wire																
		Interoffice Channel Facilities Termination			UEP9D	M1GBC	25.32										
		Interoffice Channel mileage, per mile or fraction of mile			UEP9D	M1GBM	0.0091										
	Feature Activations (DS0) Centrex Loops on Channelized DS1 Service																
	D4 Channel Bank Feature Activations																
		Feature Activation on D-4 Channel Bank Centrex Loop Slot			UEP9D	1PQWS	0.66										
		Feature Activation on D-4 Channel Bank FX line Side Loop Slot			UEP9D	1PQW6	0.66										
		Feature Activation on D-4 Channel Bank FX Trunk Side Loop Slot			UEP9D	1PQW7	0.66										
		Feature Activation on D-4 Channel Bank Centrex Loop Slot - Different Wire Center			UEP9D	1PQWP	0.66										
		Feature Activation on D-4 Channel Bank Private Line Loop Slot			UEP9D	1PQWV	0.66										
		Feature Activation on D-4 Channel Bank Tjie Line/Trunk Loop Slot			UEP9D	1PQWQ	0.66										
		Feature Activation on D-4 Channel Bank WATS Loop Slot			UEP9D	1PQWA	0.66										
	Non-Recurring Charges (NRC) Associated with UNE-P Centrex																
		NRC Conversion Currently Combined Switch-As-Is with allowed changes, per port			UEP9D	USAC2		21.50	8.42				11.90				
		Conversion of existing Centrex Common Block, each			UEP9D	USACN		5.17	8.32				11.90				
		New Centrex Standard Common Block			UEP9D	M1ACS	0.00	618.82					11.90				
		New Centrex Customized Common Block			UEP9D	M1ACC	0.00	618.82					11.90				
		NAR Establishment Charge, Per Occasion			UEP9D	URECA	0.00	66.48					11.90				
	UNE-P CENTREX - EWSD (Valid in AL, FL, KY, LA, MS & TN)																
	2-Wire VG Loop/2-Wire Voice Grade Port (Centrex) Combo																

UNBUNDLED NETWORK ELEMENTS - Florida														Attachment: 2		Exhibit: B	
CATEGORY		RATE ELEMENTS	Interim	Zone	BCS	USOC	RATES ($)					Svc Order Submitted Elec per LSR	Svc Order Submitted Manually per LSR	Incremental Charge - Manual Svc Order vs. Electronic-1st	Incremental Charge - Manual Svc Order vs. Electronic-Add'l	Incremental Charge - Manual Svc Order vs. Electronic-Disc 1st	Incremental Charge - Manual Svc Order vs. Electronic-Disc Add'l
							Rec	Nonrecurring		Nonrecurring Disconnect		OSS Rates($)					
								First	Add'l	First	Add'l	SOMEC	SOMAN	SOMAN	SOMAN	SOMAN	SOMAN
	UNE Port/Loop Combination Rates (Non-Design)																
		2-Wire VG Loop/2-Wire Voice Grade Port (Centrex) Port Combo - Non-Design		1	UEP9E		10.94										
		2-Wire VG Loop/2-Wire Voice Grade Port (Centrex)Port Combo - Non-Design		2	UEP9E		15.05										
		2-Wire VG Loop/2-Wire Voice Grade Port (Centrex)Port Combo - Non-Design		3	UEP9E		25.80										
	UNE Port/Loop Combination Rates (Design)																
		2-Wire VG Loop/2-Wire Voice Grade Port (Centrex) Port Combo - Design		1	UEP9E		13.41										
		2-Wire VG Loop/2-Wire Voice Grade Port (Centrex)Port Combo - Design		2	UEP9E		18.57										
		2-Wire VG Loop/2-Wire Voice Grade Port (Centrex)Port Combo - Design		3	UEP9E		32.04										
	UNE Loop Rate																
		2-Wire Voice Grade Loop (SL 1) - Zone 1		1	UEP9E	UECS1	9.77										
		2-Wire Voice Grade Loop (SL 1) - Zone 2		2	UEP9E	UECS1	13.88										
		2-Wire Voice Grade Loop (SL 1) - Zone 3		3	UEP9E	UECS1	24.63										
		2-Wire Voice Grade Loop (SL 2) - Zone 1		1	UEP9E	UECS2	12.24										
		2-Wire Voice Grade Loop (SL 2) - Zone 2		2	UEP9E	UECS2	17.40										
		2-Wire Voice Grade Loop (SL 2) - Zone 3		3	UEP9E	UECS2	30.87										
	UNE Port Rate																
	AL, FL, KY, LA, MS, & TN only																
		2-Wire Voice Grade Port (Centrex) Basic Local Area			UEP9E	UEPYA	1.17	53.31	26.46	27.50	8.37		11.90				
		2-Wire Voice Grade Port (Centrex 800 termination)Basic Local Area			UEP9E	UEPYB	1.17	53.31	26.46	27.50	8.37		11.90				
		2-Wire Voice Grade Port (Centrex with Caller ID)1Basic Local Area			UEP9E	UEPYH	1.17	53.31	26.46	27.50	8.37		11.90				
		2-Wire Voice Grade Port (Centrex from diff Serving Wire Center)2 Basic Local Area			UEP9E	UEPYM	1.17	139.49	86.10	65.41	13.81		11.90				
		2-Wire Voice Grade Port, Diff Serving Wire Center - 800 Service Term - Basic Local Area			UEP9E	UEPYZ	1.17	139.49	86.10	65.41	13.81		11.90				
		2-Wire Voice Grade Port terminated in on Megalink or equivalent - Basic Local Area			UEP9E	UEPY9	1.17	53.31	26.46	27.50	8.37		11.90				
		2-Wire Voice Grade Port Terminated on 800 Service Term - Basic Local Area			UEP9E	UEPY2	1.17	53.31	26.46	27.50	8.37		11.90				
	Florida Only																
		2-Wire Voice Grade Port (Centrex)			UEP9E	UEPHA	1.17	53.31	26.46	27.50	8.37		11.90				
		2-Wire Voice Grade Port (Centrex 800 termination)			UEP9E	UEPHB	1.17	53.31	26.46	27.50	8.37		11.90				
		2-Wire Voice Grade Port (Centrex with Caller ID)1			UEP9E	UEPHH	1.17	53.31	26.46	27.50	8.37		11.90				
		2-Wire Voice Grade Port (Centrex from diff Serving Wire Center)2			UEP9E	UEPHM	1.17	139.49	86.10	65.41	13.81		11.90				
		2-Wire Voice Grade Port, Diff Serving Wire Center - 800 Service Term			UEP9E	UEPHZ	1.17	139.49	86.10	65.41	13.81		11.90				
		2-Wire Voice Grade Port terminated in on Megalink or equivalent			UEP9E	UEPH9	1.17	53.31	26.46	27.50	8.37		11.90				
		2-Wire Voice Grade Port Terminated on 800 Service Term			UEP9E	UEPH2	1.17	53.31	26.46	27.50	8.37		11.90				
	Local Switching																
		Centrex Intercom Funtionality, per port			UEP9E	URECS	0.7384										
	Local Number Portability																
		Local Number Portability (1 per port)			UEP9E	LNPCC	0.35										
	Features																
		All Standard Features Offered, per port			UEP9E	UEPVF	2.26										
		All Select Features Offered, per port			UEP9E	UEPVS	0.00	370.70					11.90				
		All Centrex Control Features Offered, per port			UEP9E	UEPVC	2.26										
	NARS																
		Unbundled Network Access Register - Combination			UEP9E	UARCX	0.00	0.00	0.00				11.90				
		Unbundled Network Access Register - Indial			UEP9E	UAR1X	0.00	0.00	0.00				11.90				
		Unbundled Network Access Register - Outdial			UEP9E	UAROX	0.00	0.00	0.00				11.90				

UNBUNDLED NETWORK ELEMENTS - Florida													Attachment: 2		Exhibit: B	
CATEGORY	RATE ELEMENTS	Interim	Zone	BCS	USOC	RATES ($)					Svc Order Submitted Elec per LSR	Svc Order Submitted Manually per LSR	Incremental Charge - Manual Svc Order vs. Electronic-1st	Incremental Charge - Manual Svc Order vs. Electronic-Add'l	Incremental Charge - Manual Svc Order vs. Electronic-Disc 1st	Incremental Charge - Manual Svc Order vs. Electronic-Disc Add'l
						Rec	Nonrecurring		Nonrecurring Disconnect		OSS Rates($)					
							First	Add'l	First	Add'l	SOMEC	SOMAN	SOMAN	SOMAN	SOMAN	SOMAN
Miscellaneous Terminations																
2-Wire Trunk Side																
	Trunk Side Terminations, each			UEP9E	CEND6	8.73										
4-Wire Digital (1.544 Megabits)																
	DS1 Circuit Terminations, each			UEP9E	M1HD1	54.95										
	DS0 Channel Activated Per Channel			UEP9E	M1HDO	0.00	15.69					11.90				
Interoffice Channel Mileage - 2-Wire																
	Interoffice Channel Facilities Termination			UEP9E	M1GBC	25.32										
	Interoffice Channel mileage, per mile or fraction of mile			UEP9E	M1GBM	0.0091										
Feature Activations (DS0) Centrex Loops on Channelized DS1 Service																
D4 Channel Bank Feature Activations																
	Feature Activation on D-4 Channel Bank Centrex Loop Slot			UEP9E	1PQWS	0.66										
	Feature Activation on D-4 Channel Bank FX line Side Loop Slot			UEP9E	1PQW6	0.66										
	Feature Activation on D-4 Channel Bank FX Trunk Side Loop Slot			UEP9E	1PQW7	0.66										
	Feature Activation on D-4 Channel Bank Centrex Loop Slot - Different Wire Center			UEP9E	1PQWP	0.66										
	Feature Activation on D-4 Channel Bank Private Line Loop Slot			UEP9E	1PQWV	0.66										
	Feature Activation on D-4 Channel Bank Tjie Line/Trunk Loop Slot			UEP9E	1PQWQ	0.66										
	Feature Activation on D-4 Channel Bank WATS Loop Slot			UEP9E	1PQWA	0.66										
Non-Recurring Charges (NRC) Associated with UNE-P Centrex																
	NRC Conversion Currently Combined Switch-As-Is with allowed changes, per port			UEP9E	USAC2		21.50	8.42				11.90				
	Conversion of Existing Centrex Common Block, each			UEP9E	USACN		5.17	8.32				11.90				
	New Centrex Standard Common Block			UEP9E	M1ACS	0.00	618.82					11.90				
	New Centrex Customized Common Block			UEP9E	M1ACC	0.00	618.82					11.90				
	NAR Establishment Charge, Per Occasion			UEP9E	URECA	0.00	66.48					11.90				
Note 1 - Required Port for Centrex Control in 1AESS, 5ESS & EWSD																
Note 2 - Requres Interoffice Channel Mileage																
Note 3 - Requires Specific Customer Premises Equipment																
UNBUNDLED CENTREX PORT/LOOP COMBINATIONS - MARKET RATES																
1. Market Rates are applied where BellSouth is not required by FCC and/or State Commission rule to provide Unbundled Local Switching or Switch Ports.																
2. Recurring Charges for all Standard Centrex and Centrex Conrol Features are Included in the Market Rate																
3. End Office and Tandem Switching Usage and Common Transport Usage rates in the Port section of this rate exhibit shall apply to all combinations of loop/port network elements except for UNE Coin Port/Loop Combinations.																
4. The first and additional Port nonrecurring charges apply to Not Currently Combined Combos. For Currently Combined Combos, the nonrecurring charges shall be those identified in the Nonrecurring - Currently Combined sections. Additional NRCs may apply also and are categorized accordingly.																
UNE-P CENTREX - 1AESS - (Valid in AL,FL,GA,KY,LA,MS,&TN only)																
2-Wire VG Loop/2-Wire Voice Grade Port (Centrex) Combo																
UNE Port/Loop Combination Rates (Non-Design)																
	2-Wire VG Loop/2-Wire Voice Grade Port (Centrex) Port Combo - Non-Design		1	UEP91		26.94										
	2-Wire VG Loop/2-Wire Voice Grade Port (Centrex)Port Combo - Non-Design		2	UEP91		31.06										
	2-Wire VG Loop/2-Wire Voice Grade Port (Centrex)Port Combo - Non-Design		3	UEP91		45.87										
UNE Port/Loop Combination Rates (Design)																
	2-Wire VG Loop/2-Wire Voice Grade Port (Centrex) Port Combo - Design		1	UEP91		29.36										
	2-Wire VG Loop/2-Wire Voice Grade Port (Centrex)Port Combo - Design		2	UEP91		34.43										
	2-Wire VG Loop/2-Wire Voice Grade Port (Centrex)Port Combo - Design		3	UEP91		50.68										
UNE Loop Rate																
	2-Wire Voice Grade Loop (SL 1) - Zone 1		1	UEP91	UECS1	12.94										
	2-Wire Voice Grade Loop (SL 1) - Zone 2		2	UEP91	UECS1	17.06										
	2-Wire Voice Grade Loop (SL 1) - Zone 3		3	UEP91	UECS1	31.87										

UNBUNDLED NETWORK ELEMENTS - Florida														Attachment: 2		Exhibit: B	
CATEGORY		RATE ELEMENTS	Interim	Zone	BCS	USOC	RATES ($)					Svc Order Submitted Elec per LSR	Svc Order Submitted Manually per LSR	Incremental Charge - Manual Svc Order vs. Electronic-1st	Incremental Charge - Manual Svc Order vs. Electronic-Add'l	Incremental Charge - Manual Svc Order vs. Electronic-Disc 1st	Incremental Charge - Manual Svc Order vs. Electronic-Disc Add'l
							Rec	Nonrecurring		Nonrecurring Disconnect		OSS Rates($)					
								First	Add'l	First	Add'l	SOMEC	SOMAN	SOMAN	SOMAN	SOMAN	SOMAN
		2-Wire Voice Grade Loop (SL 2) - Zone 1		1	UEP91	UECS2	15.36										
		2-Wire Voice Grade Loop (SL 2) - Zone 2		2	UEP91	UECS2	20.43										
		2-Wire Voice Grade Loop (SL 2) - Zone 3		3	UEP91	UECS2	36.68										
	UNE Ports																
	All States (Except North Carolina and Sout Carolina)																
		2-Wire Voice Grade Port (Centrex) Basic Local Area			UEP91	UEPYA	14.00	70.00	35.00	35.00	10.00		11.90				
		2-Wire Voice Grade Port (Centrex 800 termination)Basic Local Area			UEP91	UEPYB	14.00	70.00	35.00	35.00	10.00		11.90				
		2-Wire Voice Grade Port (Centrex with Caller ID)1Basic Local Area			UEP91	UEPYH	14.00	70.00	35.00	35.00	10.00		11.90				
		2-Wire Voice Grade Port (Centrex from diff Serving Wire Center)2 Basic Local Area			UEP91	UEPYM	14.00	180.00	110.00	85.00	20.00		11.90				
		2-Wire Voice Grade Port, Diff Serving Wire Center - 800 Service Term - Basic Local Area			UEP91	UEPYZ	14.00	180.00	110.00	85.00	20.00		11.90				
		2-Wire Voice Grade Port terminated in on Megalink or equivalent - Basic Local Area			UEP91	UEPY9	14.00	70.00	35.00	35.00	10.00		11.90				
		2-Wire Voice Grade Port Terminated on 800 Service Term - Basic Local Area			UEP91	UEPY2	14.00	70.00	35.00	35.00	10.00		11.90				
	Georgia and Florida Only																
		2-Wire Voice Grade Port (Centrex)			UEP91	UEPHA	14.00	70.00	35.00	35.00	10.00		11.90				
		2-Wire Voice Grade Port (Centrex 800 termination)			UEP91	UEPHB	14.00	70.00	35.00	35.00	10.00		11.90				
		2-Wire Voice Grade Port (Centrex with Caller ID)1			UEP91	UEPHH	14.00	70.00	35.00	35.00	10.00		11.90				
		2-Wire Voice Grade Port (Centrex from diff Serving Wire Center)2			UEP91	UEPHM	14.00	180.00	110.00	85.00	20.00		11.90				
		2-Wire Voice Grade Port, Diff Serving Wire Center - 800 Service Term			UEP91	UEPHZ	14.00	180.00	110.00	85.00	20.00		11.90				
		2-Wire Voice Grade Port terminated in on Megalink or equivalent			UEP91	UEPH9	14.00	70.00	35.00	35.00	10.00		11.90				
		2-Wire Voice Grade Port Terminated on 800 Service Term			UEP91	UEPH2	14.00	70.00	35.00	35.00	10.00		11.90				
	Local Switching																
		Centrex Intercom Funtionality, per port			UEP91	URECS	0.7384										
	Local Number Portability																
		Local Number Portability (1 per port)			UEP91	LNPCC	0.35										
	Features																
		All Standard Features Offered, per port			UEP91	UEPVF	0.00						11.90				
		All Select Features Offered, per port			UEP91	UEPVS	0.00	370.70					11.90				
		All Centrex Control Features Offered, per port			UEP91	UEPVC	0.00						11.90				
	NARS																
		Unbundled Network Access Register - Combination			UEP91	UARCX	0.00	0.00	0.00				11.90				
		Unbundled Network Access Register - Indial			UEP91	UAR1X	0.00	0.00	0.00				11.90				
		Unbundled Network Access Register - Outdial			UEP91	UAROX	0.00	0.00	0.00				11.90				
	Miscellaneous Terminations																
	2-Wire Trunk Side																
		Trunk Side Terminations, each			UEP91	CENA6	8.81										
	Interoffice Channel Mileage - 2-Wire																
		Interoffice Channel Facilities Termination - Voice Grade			UEP91	M1GBC	25.32										
		Interoffice Channel mileage, per mile or fraction of mile			UEP91	M1GBM	0.0091										
	Feature Activations (DS0) Centrex Loops on Channelized DS1 Service																
	D4 Channel Bank Feature Activations																
		Feature Activation on D-4 Channel Bank Centrex Loop Slot			UEP91	1PQWS	0.66										
		Feature Activation on D-4 Channel Bank FX line Side Loop Slot			UEP91	1PQW6	0.66										
		Feature Activation on D-4 Channel Bank FX Trunk Side Loop Slot			UEP91	1PQW7	0.66										
		Feature Activation on D-4 Channel Bank Centrex Loop Slot - Different Wire Center			UEP91	1PQWP	0.66										
		Feature Activation on D-4 Channel Bank Private Line Loop Slot			UEP91	1PQWV	0.66										

CATEGORY	RATE ELEMENTS	Interim	Zone	BCS	USOC	RATES ($)					Svc Order Submitted Elec per LSR	Svc Order Submitted Manually per LSR	Attachment: 2		Exhibit: B	
													Incremental Charge - Manual Svc Order vs. Electronic-1st	Incremental Charge - Manual Svc Order vs. Electronic-Add'l	Incremental Charge - Manual Svc Order vs. Electronic-Disc 1st	Incremental Charge - Manual Svc Order vs. Electronic-Disc Add'l
						Rec	Nonrecurring		Nonrecurring Disconnect		OSS Rates($)					
							First	Add'l	First	Add'l	SOMEC	SOMAN	SOMAN	SOMAN	SOMAN	SOMAN
	Feature Activation on D-4 Channel Bank Tjie Line/Trunk Loop Slot			UEP91	1PQWQ	0.66										
	Feature Activation on D-4 Channel Bank WATS Loop Slot			UEP91	1PQWA	0.66										
Non-Recurring Charges (NRC) Associated with UNE-P Centrex																
	Conversion - Currently Combined Switch-As-Is with allowed changes, per port			UEP91	USAC2		21.50	8.42				11.90				
	Conversion of Existing Centrex Common Block			UEP91	USACN		5.17	8.32				11.90				
	New Centrex Standard Common Block			UEP91	M1ACS	0.00	618.82					11.90				
	New Centrex Customized Common Block			UEP91	M1ACC	0.00	618.82					11.90				
	Secondary Block, per Block			UEP91	M2CC1	0.00	71.31					11.90				
	NAR Establishment Charge, Per Occasion			UEP91	URECA	0.00	66.48					11.90				
UNE-P CENTREX - 5ESS (Valid in All States)																
2-Wire VG Loop/2-Wire Voice Grade Port (Centrex) Combo																
UNE Port/Loop Combination Rates (Non-Design)																
	2-Wire VG Loop/2-Wire Voice Grade Port (Centrex) Port Combo - Non-Design		1	UEP95		26.94										
	2-Wire VG Loop/2-Wire Voice Grade Port (Centrex)Port Combo - Non-Design		2	UEP95		31.06										
	2-Wire VG Loop/2-Wire Voice Grade Port (Centrex)Port Combo - Non-Design		3	UEP95		45.87										
UNE Port/Loop Combination Rates (Design)																
	2-Wire VG Loop/2-Wire Voice Grade Port (Centrex) Port Combo - Design		1	UEP95		29.36										
	2-Wire VG Loop/2-Wire Voice Grade Port (Centrex)Port Combo - Design		2	UEP95		34.43										
	2-Wire VG Loop/2-Wire Voice Grade Port (Centrex)Port Combo - Design		3	UEP95		50.68										
UNE Loop Rate																
	2-Wire Voice Grade Loop (SL 1) - Zone 1		1	UEP95	UECS1	12.94										
	2-Wire Voice Grade Loop (SL 1) - Zone 2		2	UEP95	UECS1	17.06										
	2-Wire Voice Grade Loop (SL 1) - Zone 3		3	UEP95	UECS1	31.87										
	2-Wire Voice Grade Loop (SL 2) - Zone 1		1	UEP95	UECS2	15.36										
	2-Wire Voice Grade Loop (SL 2) - Zone 2		2	UEP95	UECS2	20.43										
	2-Wire Voice Grade Loop (SL 2) - Zone 3		3	UEP95	UECS2	36.68										
UNE Port Rate																
All States																
	2-Wire Voice Grade Port (Centrex) Basic Local Area			UEP95	UEPYA	14.00	70.00	35.00	35.00	10.00		11.90				
	2-Wire Voice Grade Port (Centrex 800 termination)			UEP95	UEPYB	14.00	70.00	35.00	35.00	10.00		11.90				
	2-Wire Voice Grade Port (Centrex with Caller ID)1Basic Local Area			UEP95	UEPYH	14.00	70.00	35.00	35.00	10.00		11.90				
	2-Wire Voice Grade Port (Centrex from diff Serving Wire Center)2 Basic Local Area			UEP95	UEPYM	14.00	180.00	110.00	85.00	20.00		11.90				
	2-Wire Voice Grade Port, Diff Serving Wire Center - 800 Service Term - Basic Local Area			UEP95	UEPYZ	14.00	180.00	110.00	85.00	20.00		11.90				
	2-Wire Voice Grade Port terminated in on Megalink or equivalent - Basic Local Area			UEP95	UEPY9	14.00	70.00	35.00	35.00	10.00		11.90				
	2-Wire Voice Grade Port Terminated on 800 Service Term - Basic Local Area			UEP95	UEPY2	14.00	70.00	35.00	35.00	10.00		11.90				
AL, KY, LA, MS, SC, & TN Only																
FL & GA Only																
	2-Wire Voice Grade Port (Centrex)			UEP95	UEPHA	14.00	70.00	35.00	35.00	10.00		11.90				
	2-Wire Voice Grade Port (Centrex 800 termination)			UEP95	UEPHB	14.00	70.00	35.00	35.00	10.00		11.90				
	2-Wire Voice Grade Port (Centrex with Caller ID)1			UEP95	UEPHH	14.00	70.00	35.00	35.00	10.00		11.90				
	2-Wire Voice Grade Port (Centrex from diff Serving Wire Center)2			UEP95	UEPHM	14.00	180.00	110.00	85.00	20.00		11.90				
	2-Wire Voice Grade Port, Diff Serving Wire Center - 800 Service Term			UEP95	UEPHZ	14.00	180.00	110.00	85.00	20.00		11.90				
	2-Wire Voice Grade Port terminated in on Megalink or equivalent			UEP95	UEPH9	14.00	70.00	35.00	35.00	10.00		11.90				

UNBUNDLED NETWORK ELEMENTS - Florida														Attachment: 2		Exhibit: B	
CATEGORY	RATE ELEMENTS	Interim	Zone	BCS	USOC	RATES ($)					Svc Order Submitted Elec per LSR	Svc Order Submitted Manually per LSR	Incremental Charge - Manual Svc Order vs. Electronic-1st	Incremental Charge - Manual Svc Order vs. Electronic-Add'l	Incremental Charge - Manual Svc Order vs. Electronic-Disc 1st	Incremental Charge - Manual Svc Order vs. Electronic-Disc Add'l
						Rec	Nonrecurring		Nonrecurring Disconnect		OSS Rates($)					
							First	Add'l	First	Add'l	SOMEC	SOMAN	SOMAN	SOMAN	SOMAN	SOMAN
	2-Wire Voice Grade Port Terminated on 800 Service Term			UEP95	UEPH2	14.00	70.00	35.00	35.00	10.00		11.90				
Local Switching																
	Centrex Intercom Funtionality, per port			UEP95	URECS	0.7384										
Local Number Portability																
	Local Number Portability (1 per port)			UEP95	LNPCC	0.35										
Features																
	All Standard Features Offered, per port			UEP95	UEPVF	0.00										
	All Select Features Offered, per port			UEP95	UEPVS	0.00	370.70					11.90				
	All Centrex Control Features Offered, per port			UEP95	UEPVC	0.00										
NARS																
	Unbundled Network Access Register - Combination			UEP95	UARCX	0.00	0.00	0.00				11.90				
	Unbundled Network Access Register - Indial			UEP95	UAR1X	0.00	0.00	0.00				11.90				
	Unbundled Network Access Register - Outdial			UEP95	UAROX	0.00	0.00	0.00				11.90				
Miscellaneous Terminations																
2-Wire Trunk Side																
	Trunk Side Terminations, each			UEP95	CEND6	8.81										
4-Wire Digital (1.544 Megabits)																
	DS1 Circuit Terminations, each			UEP95	M1HD1	54.95										
	DS0 Channels Activated, each			UEP95	M1HDO	0.00	15.69					11.90				
Interoffice Channel Mileage - 2-Wire																
	Interoffice Channel Facilities Termination			UEP95	M1GBC	25.32										
	Interoffice Channel mileage, per mile or fraction of mile			UEP95	M1GBM	0.0091										
Feature Activations (DS0) Centrex Loops on Channelized DS1 Service																
D4 Channel Bank Feature Activations																
	Feature Activation on D-4 Channel Bank Centrex Loop Slot			UEP95	1PQWS	0.66										
	Feature Activation on D-4 Channel Bank FX line Side Loop Slot			UEP95	1PQW6	0.66										
	Feature Activation on D-4 Channel Bank FX Trunk Side Loop Slot			UEP95	1PQW7	0.66										
	Feature Activation on D-4 Channel Bank Centrex Loop Slot - Different Wire Center			UEP95	1PQWP	0.66										
	Feature Activation on D-4 Channel Bank Private Line Loop Slot			UEP95	1PQWV	0.66										
	Feature Activation on D-4 Channel Bank Tjie Line/Trunk Loop Slot			UEP95	1PQWQ	0.66										
	Feature Activation on D-4 Channel Bank WATS Loop Slot			UEP95	1PQWA	0.66										
Non-Recurring Charges (NRC) Associated with UNE-P Centrex																
	NRC Conversion Currently Combined Switch-As-Is with allowed changes, per port			UEP95	USAC2	0.00	21.50	8.42				11.90				
	Conversion of Existing Centrex Common Block, each			UEP95	USACN		5.17	8.32				11.90				
	New Centrex Standard Common Block			UEP95	M1ACS	0.00	618.82					11.90				
	New Centrex Customized Common Block			UEP95	M1ACC	0.00	618.82					11.90				
	NAR Establishment Charge, Per Occasion			UEP95	URECA	0.00	66.48					11.90				
UNE-P CENTREX - DMS100 (Valid in All States)																
2-Wire VG Loop/2-Wire Voice Grade Port (Centrex) Combo																
UNE Port/Loop Combination Rates (Non-Design)																
	2-Wire VG Loop/2-Wire Voice Grade Port (Centrex) Port Combo - Non-Design		1	UEP9D		26.94										
	2-Wire VG Loop/2-Wire Voice Grade Port (Centrex)Port Combo - Non-Design		2	UEP9D		31.06										
	2-Wire VG Loop/2-Wire Voice Grade Port (Centrex)Port Combo - Non-Design		3	UEP9D		45.87										
UNE Port/Loop Combination Rates (Design)																
	2-Wire VG Loop/2-Wire Voice Grade Port (Centrex) Port Combo - Design		1	UEP9D		29.36										
	2-Wire VG Loop/2-Wire Voice Grade Port (Centrex)Port Combo - Design		2	UEP9D		34.43										
	2-Wire VG Loop/2-Wire Voice Grade Port (Centrex)Port Combo - Design		3	UEP9D		50.68										

UNBUNDLED NETWORK ELEMENTS - Florida														Attachment: 2		Exhibit: B	
CATEGORY		RATE ELEMENTS	Interim	Zone	BCS	USOC	RATES ($)					Svc Order Submitted Elec per LSR	Svc Order Submitted Manually per LSR	Incremental Charge - Manual Svc Order vs. Electronic-1st	Incremental Charge - Manual Svc Order vs. Electronic-Add'l	Incremental Charge - Manual Svc Order vs. Electronic-Disc 1st	Incremental Charge - Manual Svc Order vs. Electronic-Disc Add'l
							Rec	Nonrecurring		Nonrecurring Disconnect		OSS Rates($)					
								First	Add'l	First	Add'l	SOMEC	SOMAN	SOMAN	SOMAN	SOMAN	SOMAN
	UNE Loop Rate																
		2-Wire Voice Grade Loop (SL 1) - Zone 1		1	UEP9D	UECS1	12.94										
		2-Wire Voice Grade Loop (SL 1) - Zone 2		2	UEP9D	UECS1	17.06										
		2-Wire Voice Grade Loop (SL 1) - Zone 3		3	UEP9D	UECS1	31.87										
		2-Wire Voice Grade Loop (SL 2) - Zone 1		1	UEP9D	UECS2	15.36										
		2-Wire Voice Grade Loop (SL 2) - Zone 2		2	UEP9D	UECS2	20.43										
		2-Wire Voice Grade Loop (SL 2) - Zone 3		3	UEP9D	UECS2	36.68										
	UNE Port Rate																
	ALL STATES																
		2-Wire Voice Grade Port (Centrex) Basic Local Area			UEP9D	UEPYA	14.00						11.90				
		2-Wire Voice Grade Port (Centrex 800 termination)Basic Local Area			UEP9D	UEPYB	14.00	70.00	35.00	35.00	10.00		11.90				
		2-Wire Voice Grade Port (Centrex / EBS-PSET)3Basic Local Area			UEP9D	UEPYC	14.00	70.00	35.00	35.00	10.00		11.90				
		2-Wire Voice Grade Port (Centrex / EBS-M5009)3Basic Local Area			UEP9D	UEPYD	14.00	70.00	35.00	35.00	10.00		11.90				
		2-Wire Voice Grade Port (Centrex / EBS-M5209))3 Basic Local Area			UEP9D	UEPYE	14.00	70.00	35.00	35.00	10.00		11.90				
		2-Wire Voice Grade Port (Centrex / EBS-M5112))3 Basic Local Area			UEP9D	UEPYF	14.00	70.00	35.00	35.00	10.00		11.90				
		2-Wire Voice Grade Port (Centrex / EBS-M5312))3Basic Local Area			UEP9D	UEPYG	14.00	70.00	35.00	35.00	10.00		11.90				
		2-Wire Voice Grade Port (Centrex / EBS-M5008))3 Basic Local Area			UEP9D	UEPYT	14.00	70.00	35.00	35.00	10.00		11.90				
		2-Wire Voice Grade Port (Centrex / EBS-M5208))3 Basic Local Area			UEP9D	UEPYU	14.00	70.00	35.00	35.00	10.00		11.90				
		2-Wire Voice Grade Port (Centrex / EBS-M5216))3 Basic Local Area			UEP9D	UEPYV	14.00	70.00	35.00	35.00	10.00		11.90				
		2-Wire Voice Grade Port (Centrex / EBS-M5316))3 Basic Local Area			UEP9D	UEPY3	14.00	70.00	35.00	35.00	10.00		11.90				
		2-Wire Voice Grade Port (Centrex with Caller ID) Basic Local Area			UEP9D	UEPYH	14.00	70.00	35.00	35.00	10.00		11.90				
		2-Wire Voice Grade Port (Centrex/Caller ID/Msg Wtg Lamp Indication))3 Basic Local Area			UEP9D	UEPYW	14.00	70.00	35.00	35.00	10.00		11.90				
		2-Wire Voice Grade Port (Centrex/Msg Wtg Lamp Indication))3 Basic Local Area			UEP9D	UEPYJ	14.00	70.00	35.00	35.00	10.00		11.90				
		2-Wire Voice Grade Port (Centrex from diff Serving Wire Center) 2 Basic Local Area			UEP9D	UEPYM	14.00	70.00	35.00	35.00	10.00		11.90				
		2-Wire Voice Grade Port (Centrex/differ SWC /EBS-PSET)2, 3 Basic Local Area			UEP9D	UEPYO	14.00	70.00	35.00	35.00	10.00		11.90				
		2-Wire Voice Grade Port (Centrex/differ SWC /EBS-M5009)2, 3 Basic Local Area			UEP9D	UEPYP	14.00	70.00	35.00	35.00	10.00		11.90				
		2-Wire Voice Grade Port (Centrex/differ SWC /EBS-5209)2, 3 Basic Local Area			UEP9D	UEPYQ	14.00	180.00	110.00	85.00	20.00		11.90				
		2-Wire Voice Grade Port (Centrex/differ SWC /EBS-M5112)2, 3 Basic Local Area			UEP9D	UEPYR	14.00	180.00	110.00	85.00	20.00		11.90				
		2-Wire Voice Grade Port (Centrex/differ SWC /EBS-M5312)2, 3 Basic Local Area			UEP9D	UEPYS	14.00	180.00	110.00	85.00	20.00		11.90				
		2-Wire Voice Grade Port (Centrex/differ SWC /EBS-M5008)2, 3 Basic Local Area			UEP9D	UEPY4	14.00	180.00	110.00	85.00	20.00		11.90				
		2-Wire Voice Grade Port (Centrex/differ SWC /EBS-M5208)2, 3 Basic Local Area			UEP9D	UEPY5	14.00	180.00	110.00	85.00	20.00		11.90				
		2-Wire Voice Grade Port (Centrex/differ SWC /EBS-M5216)2, 3 Basic Local Area			UEP9D	UEPY6	14.00	180.00	110.00	85.00	20.00		11.90				
		2-Wire Voice Grade Port (Centrex/differ SWC /EBS-M5316)2, 3 Basic Local Area			UEP9D	UEPY7	14.00	180.00	110.00	85.00	20.00		11.90				
		2-Wire Voice Grade Port, Diff Serving Wire Center - 800 Service Term			UEP9D	UEPYZ	14.00	180.00	110.00	85.00	20.00		11.90				

CATEGORY	RATE ELEMENTS	Interim	Zone	BCS	USOC	RATES ($)					Svc Order Submitted Elec per LSR	Svc Order Submitted Manually per LSR	Attachment: 2 Incremental Charge - Manual Svc Order vs. Electronic-1st	Attachment: 2 Incremental Charge - Manual Svc Order vs. Electronic-Add'l	Exhibit: B Incremental Charge - Manual Svc Order vs. Electronic-Disc 1st	Exhibit: B Incremental Charge - Manual Svc Order vs. Electronic-Disc Add'l
						Rec	Nonrecurring		Nonrecurring Disconnect		OSS Rates($)					
							First	Add'l	First	Add'l	SOMEC	SOMAN	SOMAN	SOMAN	SOMAN	SOMAN
	2-Wire Voice Grade Port terminated in on Megalink or equivalent Basic Local Area			UEP9D	UEPY9	14.00	70.00	35.00	35.00	10.00		11.90				
	2-Wire Voice Grade Port Terminated on 800 Service Term Basic Local Area			UEP9D	UEPY2	14.00	70.00	35.00	35.00	10.00		11.90				
FL & GA Only																
	2-Wire Voice Grade Port (Centrex)			UEP9D	UEPHA	14.00	70.00	35.00	35.00	10.00		11.90				
	2-Wire Voice Grade Port (Centrex 800 termination)			UEP9D	UEPHB	14.00	70.00	35.00	35.00	10.00		11.90				
	2-Wire Voice Grade Port (Centrex / EBS-PSET)3			UEP9D	UEPHC	14.00	70.00	35.00	35.00	10.00		11.90				
	2-Wire Voice Grade Port (Centrex / EBS-M5009)3			UEP9D	UEPHD	14.00	70.00	35.00	35.00	10.00		11.90				
	2-Wire Voice Grade Port (Centrex / EBS-M5209)3			UEP9D	UEPHE	14.00	70.00	35.00	35.00	10.00		11.90				
	2-Wire Voice Grade Port (Centrex / EBS-M5112)3			UEP9D	UEPHF	14.00	70.00	35.00	35.00	10.00		11.90				
	2-Wire Voice Grade Port (Centrex / EBS-M5312)3			UEP9D	UEPHG	14.00	70.00	35.00	35.00	10.00		11.90				
	2-Wire Voice Grade Port (Centrex / EBS-M5008)3			UEP9D	UEPHT	14.00	70.00	35.00	35.00	10.00		11.90				
	2-Wire Voice Grade Port (Centrex / EBS-M5208)3			UEP9D	UEPHU	14.00	70.00	35.00	35.00	10.00		11.90				
	2-Wire Voice Grade Port (Centrex / EBS-M5216)3			UEP9D	UEPHV	14.00	70.00	35.00	35.00	10.00		11.90				
	2-Wire Voice Grade Port (Centrex / EBS-M5316)3			UEP9D	UEPH3	14.00	70.00	35.00	35.00	10.00		11.90				
	2-Wire Voice Grade Port (Centrex with Caller ID)			UEP9D	UEPHH	14.00	70.00	35.00	35.00	10.00		11.90				
	2-Wire Voice Grade Port (Centrex/Caller ID/Msg Wtg Lamp Indication)3			UEP9D	UEPHW	14.00	70.00	35.00	35.00	10.00		11.90				
	2-Wire Voice Grade Port (Centrex/Msg Wtg Lamp Indication)3			UEP9D	UEPHJ	14.00	70.00	35.00	35.00	10.00		11.90				
	2-Wire Voice Grade Port (Centrex from diff Serving Wire Center) 2			UEP9D	UEPHM	14.00	180.00	110.00	85.00	20.00		11.90				
	2-Wire Voice Grade Port (Centrex/differ SWC /EBS-PSET)2, 3			UEP9D	UEPHO	14.00	180.00	110.00	85.00	20.00		11.90				
	2-Wire Voice Grade Port (Centrex/differ SWC /EBS-M5009)2, 3			UEP9D	UEPHP	14.00	180.00	110.00	85.00	20.00		11.90				
	2-Wire Voice Grade Port (Centrex/differ SWC /EBS-5209)2, 3			UEP9D	UEPHQ	14.00	180.00	110.00	85.00	20.00		11.90				
	2-Wire Voice Grade Port (Centrex/differ SWC /EBS-M5112)2, 3			UEP9D	UEPHR	14.00	180.00	110.00	85.00	20.00		11.90				
	2-Wire Voice Grade Port (Centrex/differ SWC /EBS-M5312)2, 3			UEP9D	UEPHS	14.00	180.00	110.00	85.00	20.00		11.90				
	2-Wire Voice Grade Port (Centrex/differ SWC /EBS-M5008)2, 3			UEP9D	UEPH4	14.00	180.00	110.00	85.00	20.00		11.90				
	2-Wire Voice Grade Port (Centrex/differ SWC /EBS-M5208)2, 3			UEP9D	UEPH5	14.00	180.00	110.00	85.00	20.00		11.90				
	2-Wire Voice Grade Port (Centrex/differ SWC /EBS-M5216)2, 3			UEP9D	UEPH6	14.00	180.00	110.00	85.00	20.00		11.90				
	2-Wire Voice Grade Port (Centrex/differ SWC /EBS-M5316)2, 3			UEP9D	UEPH7	14.00	180.00	110.00	85.00	20.00		11.90				
	2-Wire Voice Grade Port, Diff Serving Wire Center - 800 Service Term			UEP9D	UEPHZ	14.00	180.00	110.00	85.00	20.00		11.90				
	2-Wire Voice Grade Port terminated in on Megalink or equivalent			UEP9D	UEPH9	14.00	70.00	35.00	35.00	10.00		11.90				
	2-Wire Voice Grade Port Terminated on 800 Service Term			UEP9D	UEPH2	14.00	70.00	35.00	35.00	10.00		11.90				
Local Switching																
	Centrex Intercom Funtionality, per port			UEP9D	URECS	0.7384										
Local Number Portability																
	Local Number Portability (1 per port)			UEP9D	LNPCC	0.35										
Features																
	All Standard Features Offered, per port			UEP9D	UEPVF	0.00										
	All Select Features Offered, per port			UEP9D	UEPVS	0.00	370.70					11.90				
	All Centrex Control Features Offered, per port			UEP9D	UEPVC	0.00										
NARS																
	Unbundled Network Access Register - Combination			UEP9D	UARCX	0.00	0.00	0.00				11.90				
	Unbundled Network Access Register - Inward			UEP9D	UAR1X	0.00	0.00	0.00				11.90				
	Unbundled Network Access Register - Outdial			UEP9D	UAROX	0.00	0.00	0.00				11.90				
Miscellaneous Terminations																
2-Wire Trunk Side																
	Trunk Side Terminations, each			UEP9D	CEND6	8.81										
4-Wire Digital (1.544 Megabits)																

CATEGORY	RATE ELEMENTS	Interim	Zone	BCS	USOC	RATES ($)					Svc Order Submitted Elec per LSR	Svc Order Submitted Manually per LSR	Attachment: 2 Incremental Charge - Manual Svc Order vs. Electronic-1st	Attachment: 2 Incremental Charge - Manual Svc Order vs. Electronic-Add'l	Exhibit: B Incremental Charge - Manual Svc Order vs. Electronic-Disc 1st	Exhibit: B Incremental Charge - Manual Svc Order vs. Electronic-Disc Add'l
						Rec	Nonrecurring		Nonrecurring Disconnect		OSS Rates($)					
							First	Add'l	First	Add'l	SOMEC	SOMAN	SOMAN	SOMAN	SOMAN	SOMAN
	DS1 Circuit Terminations, each			UEP9D	M1HD1	54.95										
	DS0 Channels Activiated per Channel			UEP9D	M1HDO	0.00	15.69					11.90				
Interoffice Channel Mileage - 2-Wire																
	Interoffice Channel Facilities Termination			UEP9D	M1GBC	25.32										
	Interoffice Channel mileage, per mile or fraction of mile			UEP9D	M1GBM	0.0091										
Feature Activations (DS0) Centrex Loops on Channelized DS1 Service																
D4 Channel Bank Feature Activations																
	Feature Activation on D-4 Channel Bank Centrex Loop Slot			UEP9D	1PQWS	0.66										
	Feature Activation on D-4 Channel Bank FX line Side Loop Slot			UEP9D	1PQW6	0.66										
	Feature Activation on D-4 Channel Bank FX Trunk Side Loop Slot			UEP9D	1PQW7	0.66										
	Feature Activation on D-4 Channel Bank Centrex Loop Slot - Different Wire Center			UEP9D	1PQWP	0.66										
	Feature Activation on D-4 Channel Bank Private Line Loop Slot			UEP9D	1PQWV	0.66										
	Feature Activation on D-4 Channel Bank Tjie Line/Trunk Loop Slot			UEP9D	1PQWQ	0.66										
	Feature Activation on D-4 Channel Bank WATS Loop Slot			UEP9D	1PQWA	0.66										
Non-Recurring Charges (NRC) Associated with UNE-P Centrex																
	NRC Conversion Currently Combined Switch-As-Is with allowed changes, per port			UEP9D	USAC2		21.50	8.42				11.90				
	Conversion of existing Centrex Common Block, each			UEP9D	USACN		5.17	8.32				11.90				
	New Centrex Standard Common Block			UEP9D	M1ACS	0.00	618.82					11.90				
	New Centrex Customized Common Block			UEP9D	M1ACC	0.00	618.82					11.90				
	NAR Establishment Charge, Per Occasion			UEP9D	URECA	0.00	66.48					11.90				
UNE-P CENTREX - EWSD (Valid in AL, FL, KY, LA, MS & TN)																
2-Wire VG Loop/2-Wire Voice Grade Port (Centrex) Combo																
UNE Port/Loop Combination Rates (Non-Design)																
	2-Wire VG Loop/2-Wire Voice Grade Port (Centrex) Port Combo - Non-Design		1	UEP9E		26.94										
	2-Wire VG Loop/2-Wire Voice Grade Port (Centrex)Port Combo - Non-Design		2	UEP9E		31.06										
	2-Wire VG Loop/2-Wire Voice Grade Port (Centrex)Port Combo - Non-Design		3	UEP9E		45.87										
UNE Port/Loop Combination Rates (Design)																
	2-Wire VG Loop/2-Wire Voice Grade Port (Centrex) Port Combo - Design		1	UEP9E		29.36										
	2-Wire VG Loop/2-Wire Voice Grade Port (Centrex)Port Combo - Design		2	UEP9E		34.43										
	2-Wire VG Loop/2-Wire Voice Grade Port (Centrex)Port Combo - Design		3	UEP9E		50.68										
UNE Loop Rate																
	2-Wire Voice Grade Loop (SL 1) - Zone 1		1	UEP9E	UECS1	12.94										
	2-Wire Voice Grade Loop (SL 1) - Zone 2		2	UEP9E	UECS1	17.06										
	2-Wire Voice Grade Loop (SL 1) - Zone 3		3	UEP9E	UECS1	31.87										
	2-Wire Voice Grade Loop (SL 2) - Zone 1		1	UEP9E	UECS2	15.36										
	2-Wire Voice Grade Loop (SL 2) - Zone 2		2	UEP9E	UECS2	20.43										
	2-Wire Voice Grade Loop (SL 2) - Zone 3		3	UEP9E	UECS2	36.68										
UNE Port Rate																
AL, FL, KY, LA, MS, & TN only																
	2-Wire Voice Grade Port (Centrex) Basic Local Area			UEP9E	UEPYA	14.00	70.00	35.00	35.00	10.00		11.90				
	2-Wire Voice Grade Port (Centrex 800 termination)Basic Local Area			UEP9E	UEPYB	14.00	70.00	35.00	35.00	10.00		11.90				
	2-Wire Voice Grade Port (Centrex with Caller ID)1Basic Local Area			UEP9E	UEPYH	14.00	70.00	35.00	35.00	10.00		11.90				
	2-Wire Voice Grade Port (Centrex from diff Serving Wire Center)2 Basic Local Area			UEP9E	UEPYM	14.00	180.00	110.00	85.00	20.00		11.90				

UNBUNDLED NETWORK ELEMENTS - Florida														Attachment: 2		Exhibit: B	
CATEGORY		RATE ELEMENTS	Interim	Zone	BCS	USOC	RATES ($)					Svc Order Submitted Elec per LSR	Svc Order Submitted Manually per LSR	Incremental Charge - Manual Svc Order vs. Electronic-1st	Incremental Charge - Manual Svc Order vs. Electronic-Add'l	Incremental Charge - Manual Svc Order vs. Electronic-Disc 1st	Incremental Charge - Manual Svc Order vs. Electronic-Disc Add'l
							Rec	Nonrecurring		Nonrecurring Disconnect		OSS Rates($)					
								First	Add'l	First	Add'l	SOMEC	SOMAN	SOMAN	SOMAN	SOMAN	SOMAN
		2-Wire Voice Grade Port, Diff Serving Wire Center - 800 Service Term - Basic Local Area			UEP9E	UEPYZ	14.00	180.00	110.00	85.00	20.00		11.90				
		2-Wire Voice Grade Port terminated in on Megalink or equivalent - Basic Local Area			UEP9E	UEPY9	14.00	70.00	35.00	35.00	10.00		11.90				
		2-Wire Voice Grade Port Terminated on 800 Service Term - Basic Local Area			UEP9E	UEPY2	14.00	70.00	35.00	35.00	10.00		11.90				
	Florida Only																
		2-Wire Voice Grade Port (Centrex)			UEP9E	UEPHA	14.00	70.00	35.00	35.00	10.00		11.90				
		2-Wire Voice Grade Port (Centrex 800 termination)			UEP9E	UEPHB	14.00	70.00	35.00	35.00	10.00		11.90				
		2-Wire Voice Grade Port (Centrex with Caller ID)1			UEP9E	UEPHH	14.00	70.00	35.00	35.00	10.00		11.90				
		2-Wire Voice Grade Port (Centrex from diff Serving Wire Center)2			UEP9E	UEPHM	14.00	180.00	110.00	85.00	20.00		11.90				
		2-Wire Voice Grade Port, Diff Serving Wire Center - 800 Service Term			UEP9E	UEPHZ	14.00	180.00	110.00	85.00	20.00		11.90				
		2-Wire Voice Grade Port terminated in on Megalink or equivalent			UEP9E	UEPH9	14.00	70.00	35.00	35.00	10.00		11.90				
		2-Wire Voice Grade Port Terminated on 800 Service Term			UEP9E	UEPH2	14.00	70.00	35.00	35.00	10.00		11.90				
	Local Switching																
		Centrex Intercom Funtionality, per port			UEP9E	URECS	0.7384										
	Local Number Portability																
		Local Number Portability (1 per port)			UEP9E	LNPCC	0.35										
	Features																
		All Standard Features Offered, per port			UEP9E	UEPVF	0.00										
		All Select Features Offered, per port			UEP9E	UEPVS	0.00	370.70					11.90				
		All Centrex Control Features Offered, per port			UEP9E	UEPVC	0.00										
	NARS																
		Unbundled Network Access Register - Combination			UEP9E	UARCX	0.00	0.00	0.00				11.90				
		Unbundled Network Access Register - Indial			UEP9E	UAR1X	0.00	0.00	0.00				11.90				
		Unbundled Network Access Register - Outdial			UEP9E	UAROX	0.00	0.00	0.00				11.90				
	Miscellaneous Terminations																
	2-Wire Trunk Side																
		Trunk Side Terminations, each			UEP9E	CEND6	8.81										
	4-Wire Digital (1.544 Megabits)																
		DS1 Circuit Terminations, each			UEP9E	M1HD1	54.95										
		DS0 Channel Activated Per Channel			UEP9E	M1HDO	0.00	15.69					11.90				
	Interoffice Channel Mileage - 2-Wire																
		Interoffice Channel Facilities Termination			UEP9E	M1GBC	25.32										
		Interoffice Channel mileage, per mile or fraction of mile			UEP9E	M1GBM	0.0091										
	Feature Activations (DS0) Centrex Loops on Channelized DS1 Service																
	D4 Channel Bank Feature Activations																
		Feature Activation on D-4 Channel Bank Centrex Loop Slot			UEP9E	1PQWS	0.66										
		Feature Activation on D-4 Channel Bank FX line Side Loop Slot			UEP9E	1PQW6	0.66										
		Feature Activation on D-4 Channel Bank FX Trunk Side Loop Slot			UEP9E	1PQW7	0.66										
		Feature Activation on D-4 Channel Bank Centrex Loop Slot - Different Wire Center			UEP9E	1PQWP	0.66										
		Feature Activation on D-4 Channel Bank Private Line Loop Slot			UEP9E	1PQWV	0.66										
		Feature Activation on D-4 Channel Bank Tjie Line/Trunk Loop Slot			UEP9E	1PQWQ	0.66										
		Feature Activation on D-4 Channel Bank WATS Loop Slot			UEP9E	1PQWA	0.66										
	Non-Recurring Charges (NRC) Associated with UNE-P Centrex																
		NRC Conversion Currently Combined Switch-As-Is with allowed changes, per port			UEP9E	USAC2		21.50	8.42				11.90				
		Conversion of Existing Centrex Common Block, each			UEP9E	USACN		5.17	8.32				11.90				
		New Centrex Standard Common Block			UEP9E	M1ACS	0.00	618.82					11.90				
		New Centrex Customized Common Block			UEP9E	M1ACC	0.00	618.82					11.90				
		NAR Establishment Charge, Per Occasion			UEP9E	URECA	0.00	66.48					11.90				

UNBUNDLED NETWORK ELEMENTS - Florida														Attachment: 2		Exhibit: B	
CATEGORY		RATE ELEMENTS	Interim	Zone	BCS	USOC	RATES ($)					Svc Order Submitted Elec per LSR	Svc Order Submitted Manually per LSR	Incremental Charge - Manual Svc Order vs. Electronic-1st	Incremental Charge - Manual Svc Order vs. Electronic-Add'l	Incremental Charge - Manual Svc Order vs. Electronic-Disc 1st	Incremental Charge - Manual Svc Order vs. Electronic-Disc Add'l
							Rec	Nonrecurring		Nonrecurring Disconnect		OSS Rates($)					
								First	Add'l	First	Add'l	SOMEC	SOMAN	SOMAN	SOMAN	SOMAN	SOMAN
	Note 1 - Required Port for Centrex Control in 1AESS, 5ESS & EWSD																
	Note 2 - Requres Interoffice Channel Mileage																
	Note 3 - Requires Specific Customer Premises Equipment																
	Note: Rates displaying an "R" in Interim column are interim and subject to rate true-up as set forth in General Terms and Conditions.																

UNBUNDLED NETWORK ELEMENTS - Georgia														Attachment: 2		Exhibit: B	
CATEGORY	RATE ELEMENTS	Interim	Zone	BCS	USOC	RATES ($)					Svc Order Submitted Elec per LSR	Svc Order Submitted Manually per LSR	Incremental Charge - Manual Svc Order vs. Electronic-1st	Incremental Charge - Manual Svc Order vs. Electronic-Add'l	Incremental Charge - Manual Svc Order vs. Electronic-Disc 1st	Incremental Charge - Manual Svc Order vs. Electronic-Disc Add'l
						Rec	Nonrecurring		Nonrecurring Disconnect		OSS Rates($)					
							First	Add'l	First	Add'l	SOMEC	SOMAN	SOMAN	SOMAN	SOMAN	SOMAN
	The "Zone" shown in the sections for stand-alone loops or loops as part of a combination refers to Geographically Deaveraged UNE Zones. To view Geographically Deaveraged UNE Zone Designations by Central Office, refer to internet Website: http://www.interconnection.bellsouth.com/become_a_clec/html/interconnection.htm															
OPERATIONAL SUPPORT SYSTEMS																
	NOTE: (1) Electronic Service Order: CLEC should contact its contract negotiator if it prefers the state specific electronic service ordering charges as ordered by the State Commissions. The electronic service ordering charge currently contained in this rate exhibit is the BellSouth regional electronic service ordering charge. CLEC may elect either the state specific Commission ordered rates for the electronic service ordering charges, or CLEC may elect the regional electronic service ordering charge.															
	NOTE: (2) Any element that can be ordered electronically will be billed according to the SOMEC rate listed in this category. Please refer to BellSouth's Business Rules for Local Ordering (BBR-LO) to determine if a product can be ordered electronically. For those elements that cannot be ordered electronically at present per the BBR-LO, the listed SOMEC rate in this category reflects the charge that would be billed to a CLEC once electronic ordering capabilities come on-line for that element. Otherwise, the manual ordering charge, SOMAN, will be applied to a CLECs bill when it submits an LSR to BellSouth.															
	Electronic OSS Charge, per LSR, submitted via BST's OSS interactive interfaces (Regional)				SOMEC		3.50									
UNE SERVICE DATE ADVANCEMENT CHARGE																
	NOTE: The Expedite charge will be maintained commensurate with BellSouth's FCC No.1 Tariff, Section 5 as applicable.															
	UNE Expedite Charge per Circuit or Line Assignable USOC, per Day			UAL, UEANL, UCL, UEF, UDF, UEQ, UDL, UENTW, UDN, UEA, UHL, ULC, USL, U1T12, U1T48, U1TD1, U1TD3, U1TDX, U1TO3, U1TS1, U1TVX, UC1BC, UC1BL, UC1CC, UC1CL, UC1DC, UC1DL, UC1EC, UC1EL, UC1FC, UC1FL, UC1GC, UC1GL, UC1HC, UC1HL, UDL12, UDL48, UDLO3, UDLSX, UE3, ULD12, ULD48, ULDD1, ULDD3, ULDDX, ULDO3, ULDS1, ULDVX, UNC1X, UNC3X, UNCDX, UNCNX, UNCSX, UNCVX, UNLD1, UNLD3, UXTD1, UXTD3, UXTS1, U1TUC, U1TUD, U1TUB, U1TUA	SDASP		200.00									
UNBUNDLED EXCHANGE ACCESS LOOP																
	2-WIRE ANALOG VOICE GRADE LOOP															
	2-Wire Analog Voice Grade Loop - Service Level 1- Zone 1		1	UEANL	UEAL2	14.21	42.54	31.33					18.94	8.42	0.00	0.00
	2-Wire Analog Voice Grade Loop - Service Level 1- Zone 2		2	UEANL	UEAL2	16.41	42.54	31.33					18.94	8.42	0.00	0.00
	2-Wire Analog Voice Grade Loop - Service Level 1- Zone 3		3	UEANL	UEAL2	26.08	42.54	31.33					18.94	8.42	0.00	0.00
	Unbundled Miscellaneous Rate Element, Tag Loop at End User Premise			UEANL	URETL		8.33	0.83					18.94	8.42	0.00	0.00
	Loop Testing - Basic 1st Half Hour			UEANL	URET1		78.92	78.92					18.94	8.42	0.00	0.00
	Loop Testing - Basic Additional Half Hour			UEANL	URETA		23.33	23.33					18.94	8.42	0.00	0.00
	CLEC to CLEC Conversion Charge Without Outside Dispatch (UVL-SL1)			UEANL	UREWO		15.75	8.92								
	Unbundled Voice Loop, Non-Design Voice Loop, billing for BST providing make-up (Engineering Information - E.I.)			UEANL	UEANM		14.47	14.47								
	Manual Order Coordiantion for UVL-SL1s (per loop)			UEANL	UEAMC		16.11	16.11								
	Order Coordination for Specified Conversion Time for UVL-SL1 (per LSR)			UEANL	OCOSL		35.74	35.74								

CATEGORY	RATE ELEMENTS	Interim	Zone	BCS	USOC	RATES ($)					Svc Order Submitted Elec per LSR	Svc Order Submitted Manually per LSR	Attachment: 2 Incremental Charge - Manual Svc Order vs. Electronic-1st	Attachment: 2 Incremental Charge - Manual Svc Order vs. Electronic-Add'l	Exhibit: B Incremental Charge - Manual Svc Order vs. Electronic-Disc 1st	Exhibit: B Incremental Charge - Manual Svc Order vs. Electronic-Disc Add'l
						Rec	Nonrecurring		Nonrecurring Disconnect		OSS Rates($)					
							First	Add'l	First	Add'l	SOMEC	SOMAN	SOMAN	SOMAN	SOMAN	SOMAN
2-WIRE UNBUNDLED COPPER LOOP - NON-DESIGNED																
	2 Wire Unbundled Copper Loop Non-Designed- Zone 1		1	UEQ	UEQ2X	11.02	44.69	22.40					18.94	8.42	0.00	0.00
	2 Wire Unbundled Copper Loop Non-Designed- Zone 2		2	UEQ	UEQ2X	12.72	44.69	22.40					18.94	8.42	0.00	0.00
	2 Wire Unbundled Copper Loop Non-Designed-Zone 3		3	UEQ	UEQ2X	20.22	44.69	22.40					18.94	8.42	0.00	0.00
	Unbundled Miscellaneous Rate Element, Tag Loop at End User Premise			UEQ	URETL		8.33	0.83					18.94	8.42	0.00	0.00
	Order Coordination 2 Wire Unbundled Copper Loop - Non-Designed (per loop)			UEQ	USBMC		16.11	16.11					18.94	8.42	0.00	0.00
	Unbundled Copper Loop, Non-Design Copper Loop, billing for BST providing make-up (Engineering Information - E.I.)			UEQ	UEQMU		28.72	28.72					18.94	8.42	0.00	0.00
	Loop Testing - Basic 1st Half Hour			UEQ	URET1		78.92	78.92					18.94	8.42	0.00	0.00
	Loop Testing - Basic Additional Half Hour			UEQ	URETA		23.33	23.33					18.94	8.42	0.00	0.00
	CLEC to CLEC Conversion Charge Without Outside Dispatch (UCL-ND)			UEQ	UREWO		14.25	7.42					18.94	8.42	0.00	0.00
UNBUNDLED EXCHANGE ACCESS LOOP																
2-WIRE ANALOG VOICE GRADE LOOP																
UNE Loop Rates for Line Splitting (In Ga. PSC ordered the line splitting loop USOCs match the lower port- loop combo rates UEPLX)																
	2-Wire Voice Grade Loop (SL1) for Line Splitting - Zone 1	I	1	UEPSR UEPSB	UEALS	12.59	22.14	15.25					18.94	8.42		
	2-Wire Voice Grade Loop (SL1) for Line Splitting - Zone 1	I	1	UEPSR UEPSB	UEABS	12.59	22.14	15.25					18.94	8.42		
	2-Wire Voice Grade Loop (SL1) for Line Splitting - Zone 2	I	2	UEPSR UEPSB	UEALS	14.26	22.14	15.25					18.94	8.42		
	2-Wire Voice Grade Loop (SL1) for Line Splitting - Zone 2	I	2	UEPSR UEPSB	UEABS	14.26	22.14	15.25					18.94	8.42		
	2-Wire Voice Grade Loop (SL1)for Line Splitting - Zone 3	I	3	UEPSR UEPSB	UEALS	21.62	22.14	15.25					18.94	8.42		
	2-Wire Voice Grade Loop (SL1)for Line Splitting - Zone 3	I	3	UEPSR UEPSB	UEABS	21.62	22.14	15.25					18.94	8.42		
UNBUNDLED EXCHANGE ACCESS LOOP																
2-WIRE ANALOG VOICE GRADE LOOP																
	2-Wire Analog Voice Grade Loop - Service Level 2 w/Loop or Ground Start Signaling - Zone 1		1	UEA	UEAL2	16.84	104.17	78.10					18.94	8.42	0.00	0.00
	2-Wire Analog Voice Grade Loop - Service Level 2 w/Loop or Ground Start Signaling - Zone 2		2	UEA	UEAL2	19.45	104.17	78.10					18.94	8.42	0.00	0.00
	2-Wire Analog Voice Grade Loop - Service Level 2 w/Loop or Ground Start Signaling - Zone 3		3	UEA	UEAL2	30.92	104.17	78.10					18.94	8.42	0.00	0.00
	Order Coordination for Specified Conversion Time (per LSR)			UEA	OCOSL		35.74									
	2-Wire Analog Voice Grade Loop - Service Level 2 w/Reverse Battery Signaling - Zone 1		1	UEA	UEAR2	16.84	104.17	78.10					18.94	8.42	0.00	0.00
	2-Wire Analog Voice Grade Loop - Service Level 2 w/Reverse Battery Signaling - Zone 2		2	UEA	UEAR2	19.45	104.17	78.10					18.94	8.42	0.00	0.00
	2-Wire Analog Voice Grade Loop - Service Level 2 w/Reverse Battery Signaling - Zone 3		3	UEA	UEAR2	30.92	104.17	78.10					18.94	8.42	0.00	0.00
	Order Coordination for Specified Conversion Time (per LSR)			UEA	OCOSL		35.74									
	CLEC to CLEC Conversion Charge without outside dispatch			UEA	UREWO		87.72	36.36					18.94	8.42	0.00	0.00
	Loop Tagging - Service Level 2 (SL2)			UEA	URETL		11.19	1.10					18.94	8.42	0.00	0.00
4-WIRE ANALOG VOICE GRADE LOOP																
	4-Wire Analog Voice Grade Loop - Zone 1		1	UEA	UEAL4	22.26	206.95	170.57					18.94	8.42	0.00	0.00
	4-Wire Analog Voice Grade Loop - Zone 2		2	UEA	UEAL4	25.70	206.95	170.57					18.94	8.42	0.00	0.00
	4-Wire Analog Voice Grade Loop - Zone 3		3	UEA	UEAL4	40.86	206.95	170.57					18.94	8.42	0.00	0.00
	Order Coordination for Specified Conversion Time (per LSR)			UEA	OCOSL		35.74									
	CLEC to CLEC Conversion Charge without outside dispatch			UEA	UREWO		87.72	36.36					18.94	8.42	0.00	0.00
2-WIRE ISDN DIGITAL GRADE LOOP																
	2-Wire ISDN Digital Grade Loop - Zone 1		1	UDN	U1L2X	21.89	233.38	180.35					18.94	8.42	0.00	0.00
	2-Wire ISDN Digital Grade Loop - Zone 2		2	UDN	U1L2X	25.27	233.38	180.35					18.94	8.42	0.00	0.00
	2-Wire ISDN Digital Grade Loop - Zone 3		3	UDN	U1L2X	40.17	233.38	180.35					18.94	8.42	0.00	0.00
	Order Coordination For Specified Conversion Time (per LSR)			UDN	OCOSL		35.74									
	CLEC to CLEC Conversion Charge without outside dispatch			UDN	UREWO		120.98	33.04					18.94	8.42	0.00	0.00
2-WIRE Universal Digital Channel (UDC) COMPATIBLE LOOP																
	2-Wire Universal Digital Channel (UDC) Compatible Loop - Zone 1	I	1	UDC	UDC2X	21.89	44.69	31.55	25.65	7.06			18.94	8.42	0.00	0.00
	2-Wire Universal Digital Channel (UDC) Compatible Loop - Zone 2	I	2	UDC	UDC2X	25.27	44.69	31.55	25.65	7.06			18.94	8.42	0.00	0.00

CATEGORY	RATE ELEMENTS	Interim	Zone	BCS	USOC	RATES ($)					Svc Order Submitted Elec per LSR	Svc Order Submitted Manually per LSR	Attachment: 2 Incremental Charge - Manual Svc Order vs. Electronic-1st	Attachment: 2 Incremental Charge - Manual Svc Order vs. Electronic-Add'l	Exhibit: B Incremental Charge - Manual Svc Order vs. Electronic-Disc 1st	Exhibit: B Incremental Charge - Manual Svc Order vs. Electronic-Disc Add'l
						Rec	Nonrecurring		Nonrecurring Disconnect		OSS Rates($)					
							First	Add'l	First	Add'l	SOMEC	SOMAN	SOMAN	SOMAN	SOMAN	SOMAN
	2-Wire Universal Digital Channel (UDC) Compatible Loop - Zone 3	I	3	UDC	UDC2X	40.17	44.69	31.55	25.65	7.06			18.94	8.42	0.00	0.00
	CLEC to CLEC Conversion Charge without outside dispatch	I		UDC	UREWO		44.69	31.55					18.94	8.42	0.00	0.00
2-WIRE ASYMMETRICAL DIGITAL SUBSCRIBER LINE (ADSL) COMPATIBLE LOOP																
	2 Wire Unbundled ADSL Loop including manual service inquiry & facility reservation - Zone 1	I	1	UAL	UAL2X	11.23	44.69	31.55	25.65	7.06			18.94	8.42	0.00	0.00
	2 Wire Unbundled ADSL Loop including manual service inquiry & facility reservation - Zone 2	I	2	UAL	UAL2X	12.97	44.69	31.55	25.65	7.06			18.94	8.42	0.00	0.00
	2 Wire Unbundled ADSL Loop including manual service inquiry & facility reservation - Zone 3	I	3	UAL	UAL2X	20.62	44.69	31.55	25.65	7.06			18.94	8.42	0.00	0.00
	Order Coordination for Specified Conversion Time (per LSR)			UAL	OCOSL		35.74									
	2 Wire Unbundled ADSL Loop without manual service inquiry & facility reservaton - Zone 1	I	1	UAL	UAL2W	11.23	44.69	31.55	25.65	7.06			18.94	8.42	0.00	0.00
	2 Wire Unbundled ADSL Loop without manual service inquiry & facility reservaton - Zone 2	I	2	UAL	UAL2W	12.97	44.69	31.55	25.65	7.06			18.94	8.42	0.00	0.00
	2 Wire Unbundled ADSL Loop without manual service inquiry & facility reservaton - Zone 3	I	3	UAL	UAL2W	20.62	44.69	31.55	25.65	7.06			18.94	8.42	0.00	0.00
	Order Coordination for Specified Conversion Time (per LSR)			UAL	OCOSL		35.74									
	CLEC to CLEC Conversion Charge without outside dispatch	I		UAL	UREWO		44.69	29.29					18.94	8.42	0.00	0.00
2-WIRE HIGH BIT RATE DIGITAL SUBSCRIBER LINE (HDSL) COMPATIBLE LOOP																
	2 Wire Unbundled HDSL Loop including manual service inquiry & facility reservation - Zone 1	I	1	UHL	UHL2X	7.88	44.69	31.55	25.65	7.06			18.94	8.42	0.00	0.00
	2 Wire Unbundled HDSL Loop including manual service inquiry & facility reservation - Zone 2	I	2	UHL	UHL2X	9.09	44.69	31.55	25.65	7.06			18.94	8.42	0.00	0.00
	2 Wire Unbundled HDSL Loop including manual service inquiry & facility reservation - Zone 3	I	3	UHL	UHL2X	14.46	44.69	31.55	25.65	7.06			18.94	8.42	0.00	0.00
	Order Coordination for Specified Conversion Time (per LSR)			UHL	OCOSL		35.74									
	2 Wire Unbundled HDSL Loop without manual service inquiry and facility reservation - Zone 1	I	1	UHL	UHL2W	7.88	44.69	31.55	25.65	7.06			18.94	8.42	0.00	0.00
	2 Wire Unbundled HDSL Loop without manual service inquiry and facility reservation - Zone 2	I	2	UHL	UHL2W	9.09	44.69	31.55	25.65	7.06			18.94	8.42	0.00	0.00
	2 Wire Unbundled HDSL Loop without manual service inquiry and facility reservation - Zone 3	I	3	UHL	UHL2W	14.46	44.69	31.55	25.65	7.06			18.94	8.42	0.00	0.00
	Order Coordination for Specified Conversion Time (per LSR)			UHL	OCOSL		35.74									
	CLEC to CLEC Conversion Charge without outside dispatch	I		UHL	UREWO		44.69	31.55					18.94	8.42	0.00	0.00
4-WIRE HIGH BIT RATE DIGITAL SUBSCRIBER LINE (HDSL) COMPATIBLE LOOP																
	4 Wire Unbundled HDSL Loop including manual service inquiry and facility reservation - Zone 1	I	1	UHL	UHL4X	10.39	44.69	31.55	25.65	7.06			18.94	8.42	0.00	0.00
	4-Wire Unbundled HDSL Loop including manual service inquiry and facility reservation - Zone 2	I	2	UHL	UHL4X	12.00	44.69	31.55	25.65	7.06			18.94	8.42	0.00	0.00
	4-Wire Unbundled HDSL Loop including manual service inquiry and facility reservation - Zone 3	I	3	UHL	UHL4X	19.07	44.69	31.55	25.65	7.06			18.94	8.42	0.00	0.00
	Order Coordination for Specified Conversion Time (per LSR)			UHL	OCOSL		35.74									
	4-Wire Unbundled HDSL Loop without manual service inquiry and facility reservation - Zone 1	I	1	UHL	UHL4W	10.39	44.69	31.55	25.65	7.06			18.94	8.42	0.00	0.00
	4-Wire Unbundled HDSL Loop without manual service inquiry and facility reservation - Zone 2	I	2	UHL	UHL4W	12.00	44.69	31.55	25.65	7.06			18.94	8.42	0.00	0.00
	4-Wire Unbundled HDSL Loop without manual service inquiry and facility reservation - Zone 3	I	3	UHL	UHL4W	19.07	44.69	31.55	25.65	7.06			18.94	8.42	0.00	0.00
	Order Coordination for Specified Conversion Time (per LSR)			UHL	OCOSL		35.74									
	CLEC to CLEC Conversion Charge without outside dispatch	I		UHL	UREWO		44.69	31.55					18.94	8.42	0.00	0.00
4-WIRE DS1 DIGITAL LOOP																
	4-Wire DS1 Digital Loop - Zone 1		1	USL	USLXX	55.53	429.98	268.18					18.94	8.42	0.00	0.00
	4-Wire DS1 Digital Loop - Zone 2		2	USL	USLXX	64.13	429.98	268.18					18.94	8.42	0.00	0.00
	4-Wire DS1 Digital Loop - Zone 3		3	USL	USLXX	101.93	429.98	268.18					18.94	8.42	0.00	0.00
	Order Coordination for Specified Conversion Time (per LSR)			USL	OCOSL		35.74									
	CLEC to CLEC Conversion Charge without outside dispatch			USL	UREWO		100.91	42.97					18.94	8.42	0.00	0.00
4-WIRE 19.2, 56 OR 64 KBPS DIGITAL GRADE LOOP																
	4 Wire Unbundled Digital 19.2 Kbps		1	UDL	UDL19	25.75	348.55	241.20					18.94	8.42	0.00	0.00

UNBUNDLED NETWORK ELEMENTS - Georgia

CATEGORY	RATE ELEMENTS	Interim	Zone	BCS	USOC	RATES ($)					Svc Order Submitted Elec per LSR	Svc Order Submitted Manually per LSR	Attachment: 2 Incremental Charge - Manual Svc Order vs. Electronic-1st	Incremental Charge - Manual Svc Order vs. Electronic-Add'l	Exhibit: B Incremental Charge - Manual Svc Order vs. Electronic-Disc 1st	Incremental Charge - Manual Svc Order vs. Electronic-Disc Add'l
						Rec	Nonrecurring		Nonrecurring Disconnect		OSS Rates($)					
							First	Add'l	First	Add'l	SOMEC	SOMAN	SOMAN	SOMAN	SOMAN	SOMAN
	4 Wire Unbundled Digital 19.2 Kbps		2	UDL	UDL19	29.74	348.55	241.20					18.94	8.42	0.00	0.00
	4 Wire Unbundled Digital 19.2 Kbps		3	UDL	UDL19	47.27	348.55	241.20					18.94	8.42	0.00	0.00
	4 Wire Unbundled Digital Loop 56 Kbps - Zone 1		1	UDL	UDL56	25.75	348.55	241.20					18.94	8.42	0.00	0.00
	4 Wire Unbundled Digital Loop 56 Kbps - Zone 2		2	UDL	UDL56	29.74	348.55	241.20					18.94	8.42	0.00	0.00
	4 Wire Unbundled Digital Loop 56 Kbps - Zone 3		3	UDL	UDL56	47.27	348.55	241.20					18.94	8.42	0.00	0.00
	Order Coordination for Specified Conversion Time (per LSR)			UDL	OCOSL		35.74									
	4 Wire Unbundled Digital Loop 64 Kbps - Zone 1		1	UDL	UDL64	25.75	348.55	241.20					18.94	8.42	0.00	0.00
	4 Wire Unbundled Digital Loop 64 Kbps - Zone 2		2	UDL	UDL64	29.74	348.55	241.20					18.94	8.42	0.00	0.00
	4 Wire Unbundled Digital Loop 64 Kbps - Zone 3		3	UDL	UDL64	47.27	348.55	241.20					18.94	8.42	0.00	0.00
	Order Coordination for Specified Conversion Time (per LSR)			UDL	OCOSL		35.74									
	CLEC to CLEC Conversion Charge without outside dispatc h			UDL	UREWO		101.95	49.66					18.94	8.42	0.00	0.00
2-WIRE Unbundled COPPER LOOP																
	2-Wire Unbundled Copper Loop/Short including manual service inquiry & facility reservation - Zone 1	I	1	UCL	UCLPB	12.02	44.69	31.55	25.65	7.06			18.94	8.42	0.00	0.00
	2-Wire Unbundled Copper Loop/Short including manual service inquiry & facility reservation - Zone 2	I	2	UCL	UCLPB	13.88	44.69	31.55	25.65	7.06			18.94	8.42	0.00	0.00
	2 Wire Unbundled Copper Loop/Short including manual service inquiry & facility reservation - Zone 3	I	3	UCL	UCLPB	22.07	44.69	31.55	25.65	7.06			18.94	8.42	0.00	0.00
	Order Coordination for Unbundled Copper Loops (per loop)			UCL	UCLMC		16.11	16.11								
	2-Wire Unbundled Copper Loop/Short without manual service inquiry and facility reservation - Zone 1	I	1	UCL	UCLPW	12.02	44.69	31.55	25.65	7.06			18.94	8.42	0.00	0.00
	2-Wire Unbundled Copper Loop/Short without manual service inquiry and facility reservation - Zone 2	I	2	UCL	UCLPW	13.88	44.69	31.55	25.65	7.06			18.94	8.42	0.00	0.00
	2-Wire Unbundled Copper Loop/Short without manual service inquiry and facility reservation - Zone 3	I	3	UCL	UCLPW	22.07	44.69	31.55	25.65	7.06			18.94	8.42	0.00	0.00
	Order Coordination for Unbundled Copper Loops (per loop)			UCL	UCLMC		16.11	16.11								
	2-Wire Unbundled Copper Loop/Long - includes manual srvc. inquiry and facility reservation - Zone 1	I	1	UCL	UCL2L	35.56	44.69	31.55	25.65	7.06			18.94	8.42	0.00	0.00
	2-Wire Unbundled Copper Loop/Long - includes manual svc. inquiry and facility reservation - Zone 2	I	2	UCL	UCL2L	41.07	44.69	31.55	25.65	7.06			18.94	8.42	0.00	0.00
	2-Wire Unbundled Copper Loop/Long - includes manual svc. inquiry and facility reservation - Zone 3	I	3	UCL	UCL2L	65.28	44.69	31.55	25.65	7.06			18.94	8.42	0.00	0.00
	Order Coordination for Unbundled Copper Loops (per loop)			UCL	UCLMC		16.11	16.11								
	2-Wire Unbundled Copper Loop/Long - without manual service inquiry and facility reservation - Zone 1	I	1	UCL	UCL2W	35.56	44.69	31.55	25.65	7.06			18.94	8.42	0.00	0.00
	2-Wire Unbundled Copper Loop/Long - without manual service inquiry and facility reservation - Zone 2	I	2	UCL	UCL2W	41.07	44.69	31.55	25.65	7.06			18.94	8.42	0.00	0.00
	2-Wire Unbundled Copper Loop/Long - without manual service inquiry and facility reservation - Zone 3	I	3	UCL	UCL2W	65.28	44.69	31.55	25.65	7.06			18.94	8.42	0.00	0.00
	Order Coordination for Unbundled Copper Loops (per loop)			UCL	UCLMC		16.11	16.11								
	CLEC to CLEC Conversion Charge without outside dispatch (UCL-Des)	I		UCL	UREWO		44.69	31.55					18.94	8.42	0.00	0.00
4-WIRE COPPER LOOP																
	4-Wire Copper Loop/Short - including manual service inquiry and facility reservation - Zone 1	I	1	UCL	UCL4S	12.02	44.69	31.55	25.65	7.06			18.94	8.42	0.00	0.00
	4-Wire Copper Loop/Short - including manual service inquiry and facility reservation - Zone 2	I	2	UCL	UCL4S	13.88	44.69	31.55	25.65	7.06			18.94	8.42	0.00	0.00
	4-Wire Copper Loop/Short - including manual service inquiry and facility reservation - Zone 3	I	3	UCL	UCL4S	22.07	44.69	31.55	25.65	7.06			18.94	8.42	0.00	0.00
	Order Coordination for Unbundled Copper Loops (per loop)			UCL	UCLMC		16.11	16.11								
	4-Wire Copper Loop/Short - without manual service inquiry and facility reservation - Zone 1	I	1	UCL	UCL4W	12.02	44.69	31.55	25.65	7.06			18.94	8.42	0.00	0.00
	4-Wire Copper Loop/Short - without manual service inquiry and facility reservation - Zone 2	I	2	UCL	UCL4W	13.88	44.69	31.55	25.65	7.06			18.94	8.42	0.00	0.00
	4-Wire Copper Loop/Short - without manual service inquiry and facility reservation - Zone 3	I	3	UCL	UCL4W	22.07	44.69	31.55	25.65	7.06			18.94	8.42	0.00	0.00
	Order Coordination for Unbundled Copper Loops (per loop)			UCL	UCLMC		16.11	16.11								
	4-Wire Unbundled Copper Loop/Long - includes manual svc. inquiry and facility reservation - Zone 1	I	1	UCL	UCL4L	35.56	44.69	31.55	25.65	7.06			18.94	8.42	0.00	0.00

CATEGORY	RATE ELEMENTS	Interim	Zone	BCS	USOC	RATES ($)					Svc Order Submitted Elec per LSR	Svc Order Submitted Manually per LSR	Incremental Charge - Manual Svc Order vs. Electronic-1st	Incremental Charge - Manual Svc Order vs. Electronic-Add'l	Incremental Charge - Manual Svc Order vs. Electronic-Disc 1st	Incremental Charge - Manual Svc Order vs. Electronic-Disc Add'l
						Rec	Nonrecurring		Nonrecurring Disconnect		OSS Rates($)					
							First	Add'l	First	Add'l	SOMEC	SOMAN	SOMAN	SOMAN	SOMAN	SOMAN
	4-Wire Unbundled Copper Loop/Long - includes manual svc. inquiry and facility reservation - Zone 2	I	2	UCL	UCL4L	41.07	44.69	31.55	25.65	7.06			18.94	8.42	0.00	0.00
	4-Wire Unbundled Copper Loop/Long - includes manual svc. inquiry and facility reservation - Zone 3	I	3	UCL	UCL4L	65.28	44.69	31.55	25.65	7.06			18.94	8.42	0.00	0.00
	Order Coordination for Unbundled Copper Loops (per loop)			UCL	UCLMC		16.11	16.11								
	4-Wire Unbundled Copper Loop/Long - without manual svc. inquiry and facility reservation - Zone 1	I	1	UCL	UCL4O	35.56	44.69	31.55	25.65	7.06			18.94	8.42	0.00	0.00
	4-Wire Unbundled Copper Loop/Long - without manual svc. inquiry and facility reservation - Zone 2	I	2	UCL	UCL4O	41.07	44.69	31.55	25.65	7.06			18.94	8.42	0.00	0.00
	4-Wire Unbundled Copper Loop/Long - without manual svc. inquiry and facility reservation - Zone 3	I	3	UCL	UCL4O	65.28	44.69	31.55	25.65	7.06			18.94	8.42	0.00	0.00
	Order Coordination for Unbundled Copper Loops (per loop)			UCL	UCLMC		16.11	16.11								
	CLEC to CLEC conversion Charge without outside dispatch	I		UCL	UREWO		44.69	31.55					18.94	8.42	0.00	0.00
LOOP MODIFICATION																
	Unbundled Loop Modification, Removal of Load Coils - 2 Wire pair less than or equal to 18k ft	I		UAL, UHL, UCL, UEQ, ULS, UEA, UEANL, UEPSR, UEPSB	ULM2L		0.00	0.00					18.94	8.42	0.00	0.00
	Unbundled Loop Modification, Removal of Load Coils - 2 wire greater than 18k ft	I		UCL, ULS, UEQ	ULM2G		0.00	0.00					18.94	8.42	0.00	0.00
	Unbundled Loop Modification Removal of Load Coils - 4 Wire less than or equal to 18K ft	I		UHL, UCL, UEA	ULM4L		0.00	0.00					18.94	8.42	0.00	0.00
	Unbundled Loop Modification Removal of Load Coils - 4 Wire pair greater than 18k ft	I		UCL	ULM4G		0.00	0.00					18.94	8.42	0.00	0.00
	Unbundled Loop Modification Removal of Bridged Tap Removal, per unbundled loop	I		UAL, UHL, UCL, UEQ, ULS, UEA, UEANL, UEPSR, UEPSB	ULMBT		0.00	0.00					18.94	8.42	0.00	0.00
SUB-LOOPS																
Sub-Loop Distribution																
	Sub-Loop - Per Cross Box Location - CLEC Feeder Facility Set-Up	I		UEANL	USBSA		421.08	421.08					18.94	8.42	0.00	0.00
	Sub-Loop - Per Cross Box Location - Per 25 Pair Panel Set-Up	I		UEANL	USBSB		67.10	67.10					18.94	8.42	0.00	0.00
	Sub-Loop - Per Building Equipment Room - CLEC Feeder Facility Set-Up	I		UEANL	USBSC		394.74	394.74					18.94	8.42	0.00	0.00
	Sub-Loop - Per Building Equipment Room - Per 25 Pair Panel Set-Up	I		UEANL	USBSD		154.57	154.57					18.94	8.42	0.00	0.00
	Unbundled Sub-Loops, Riser Cable, 2-Wire per Loop, Working and Spare Loop Activation			UEANL	USBRC	1.37	2.48	2.48	1.74	1.74			18.94	8.42	0.00	0.00
	Unbundled Sub-Loops, Riser Cable, 4-Wire per Loop, Working and Spare Loop Activation			UEANL	USBRD	2.74	4.96	4.96	1.74	1.74			18.94	8.42	0.00	0.00
	Sub-Loop Distribution Per 2-Wire Analog Voice Grade Loop - Statewide		sw	UEANL	USBN2	9.12	207.01	171.32					18.94	8.42	0.00	0.00
	Order Coordination for Unbundled Sub-Loops, per sub-loop pair			UEANL	USBMC		34.22	34.22								
	Sub-Loop Distribution Per 4-Wire Analog Voice Grade Loop - Statewide		sw	UEANL	USBN4	8.32	219.35	72.99	123.72	28.77			18.94	8.42	0.00	0.00
	Order Coordination for Unbundled Sub-Loops, per sub-loop pair			UEANL	USBMC		34.22	34.22								
	Sub-Loop 2-Wire Intrabuilding Network Cable (INC)	I		UEANL	USBR2	1.37	2.48	41.59	115.85	19.17			18.94	8.42	0.00	0.00
	Order Coordination for Unbundled Sub-Loops, per sub-loop pair			UEANL	USBMC		34.22	34.22								
	Sub-Loop 4-Wire Intrabuilding Network Cable (INC)	I		UEANL	USBR4	2.96	176.46	55.11	122.17	19.57			18.94	8.42	0.00	0.00
	Order Coordination for Unbundled Sub-Loops, per sub-loop pair			UEANL	USBMC		34.22	34.22								
	2 Wire Copper Unbundled Sub-Loop Distribution - Zone 1	I	1	UEF	UCS2X	5.54	175.16	55.50	108.86	24.53			18.84	8.42	0.00	0.00
	2 Wire Copper Unbundled Sub-Loop Distribution - Zone 2	I	2	UEF	UCS2X	5.54	175.16	55.50	108.86	24.53			18.94	8.42	0.00	0.00
	2 Wire Copper Unbundled Sub-Loop Distribution - Zone 3	I	3	UEF	UCS2X	5.54	175.16	55.50	108.86	24.53			18.94	8.42	0.00	0.00

UNBUNDLED NETWORK ELEMENTS - Georgia														Attachment: 2		Exhibit: B	
CATEGORY	RATE ELEMENTS	Interim	Zone	BCS	USOC	RATES ($)					Svc Order Submitted Elec per LSR	Svc Order Submitted Manually per LSR	Incremental Charge - Manual Svc Order vs. Electronic-1st	Incremental Charge - Manual Svc Order vs. Electronic-Add'l	Incremental Charge - Manual Svc Order vs. Electronic-Disc 1st	Incremental Charge - Manual Svc Order vs. Electronic-Disc Add'l
						Rec	Nonrecurring		Nonrecurring Disconnect		OSS Rates($)					
							First	Add'l	First	Add'l	SOMEC	SOMAN	SOMAN	SOMAN	SOMAN	SOMAN
	Order Coordination for Unbundled Sub-Loops, per sub-loop pair			UEF	USBMC		34.22	34.22								
	4 Wire Copper Unbundled Sub-Loop Distribution - Zone 1	I	1	UEF	UCS4X	6.89	219.35	72.99	123.72	28.77			18.94	8.42	0.00	0.00
	4 Wire Copper Unbundled Sub-Loop Distribution - Zone 2	I	2	UEF	UCS4X	6.89	219.35	72.99	123.72	28.77			18.94	8.42	0.00	0.00
	4 Wire Copper Unbundled Sub-Loop Distribution - Zone 3	I	3	UEF	UCS4X	6.89	219.35	72.99	123.72	28.77			18.94	8.42	0.00	0.00
	Order Coordination for Unbundled Sub-Loops, per sub-loop pair			UEF	USBMC		34.22	34.22								
Unbundled Network Terminating Wire (UNTW)																
	Unbundled Network Terminating Wire (UNTW) per Pair			UENTW	UENPP	1.37	2.48	2.48	1.74	1.74			18.94	8.42	0.00	0.00
Network Interface Device (NID)																
	Network Interface Device (NID) - 1-2 lines	I		UENTW	UND12		86.37	56.69					18.94	8.42	0.00	0.00
	Network Interface Device (NID) - 1-6 lines	I		UENTW	UND16		127.93	98.21					18.94	8.42	0.00	0.00
	Network Interface Device Cross Connect - 2 W	I		UENTW	UNDC2		6.15	6.15					18.94	8.42	0.00	0.00
	Network Interface Device Cross Connect - 4W			UENTW	UNDC4		6.15	6.15								
SUB-LOOPS																
Sub-Loop Feeder																
	USL-Feeder, DS0 Set-up per Cross Box location - CLEC Distribution Facility set-up			UEA, UDN,UCL,UDL,UDC	USBFW		421.08						18.94	8.42	0.00	0.00
	USL Feeder - DS0 Set-up per Cross Box location - per 25 pair set-up			UEA, UDN,UCL,UDL,UDC	USBFX		67.10	67.10					18.94	8.42	0.00	0.00
	USL Feeder DS1 Set-up at DSX location, per DS1 termination			USL	USBFZ		521.57	11.30					18.94	8.42	0.00	0.00
	Unbundled Sub-Loop Feeder Loop, 2 Wire Ground-Start, Voice Grade- Statewide		sw	UEA	USBFA	8.58	206.44	170.05					18.94	8.42	0.00	0.00
	Order Coordination for Specified Conversion Time, per LSR			UEA	OCOSL		35.74									
	Unbundled Sub-Loop Feeder Loop, 2 Wire Loop-Start, Voice Grade - Statewide		sw	UEA	USBFB	8.58	206.44	170.05					18.94	8.42	0.00	0.00
	Order Coordination for Specified Time Conversion, per LSR			UEA	OCOSL		35.74									
	Unbundled Sub-Loop Feeder Loop, 2 Wire Reverse Battery, Voice Grade Loop - Statewide		sw	UEA	USBFC	8.58	206.44	170.05					18.94	8.42	0.00	0.00
	Order Coordination For Specified Conversion Time, per LSR			UEA	OCOSL		35.74									
	Unbundled Sub-Loop Feeder Loop, 4 Wire Ground-Start, Voice Grade - Statewide		sw	UEA	USBFD	19.91	243.41	81.32	134.77	33.93			18.94	8.42	0.00	0.00
	Order Coordination For Specified Conversion Time, Per LSR			UEA	OCOSL		35.74									
	Unbundled Sub-Loop Feeder Loop, 4 Wire Loop-Start, Voice Grade - Statewide		sw	UEA	USBFE	19.91	243.41	81.32	134.77	33.93			18.94	8.42	0.00	0.00
	Order Coordination For Specified Conversion Time, Per LSR			UEA	OCOSL		35.74									
	Unbundled Sub-Loop Feeder Loop, 2-Wire ISDN BRI - Statewide		sw	UDN	USBFF	17.73	208.50	62.31	119.68	29.58			18.94	8.42	0.00	0.00
	Order Coordination For Specified Conversion Time, Per LSR			UDN	OCOSL		35.74									
	Unbundled Sub-Loop Feeder, 2 Wire UDC (IDSL compatible)		sw	UDC	USBFS	17.73	208.50	62.31	119.68	29.58			19.99	19.99	19.99	19.99
	Unbundled Sub-Loop Feeder Loop, 4-Wire DS1 - Statewide		sw	USL	USBFG	79.30	203.69	128.76	124.09	34.80			19.99	19.99	19.99	19.99
	Order Coordination For Specified Conversion Time, Per LSR			USL	OCOSL		35.74									
	Unbundled Sub-Loop Feeder Loop, 2-Wire Copper Loop - Statewide		sw	UCL	USBFH	7.22	195.38	63.15	119.68	29.58			18.94	8.42	0.00	0.00
	Order Coordination For Specified Conversion Time, per LSR			UCL	OCOSL		35.74									
	Sub-Loop Feeder - Per 4-Wire Copper Loop - Statewide		sw	UCL	USBFJ	13.72	243.41	81.32	134.77	33.93			18.94	8.42	0.00	0.00
	Order Coordination For Specified Conversion Time, per LSR			UCL	OCOSL		35.74									
	Sub-Loop Feeder - Per 4-Wire 19.2 Kbps Digital Grade Loop		sw	UDL	USBFN	24.50	243.41	81.32	134.77	33.93			19.99	19.99	19.99	19.99
	Sub-Loop Feeder - Per 4-Wire 56 Kbps Digital Grade Loop - Statewide		sw	UDL	USBFO	24.50	243.41	81.32	134.77	33.93			19.99	19.99	19.99	19.99
	Order Coordination For Specified Time Conversion, per LSR			UDL	OCOSL		35.74									
	Sub-Loop Feeder - Per 4-Wire 64 Kbps Digital Grade Loop - Statewide		sw	UDL	USBFP	24.50	243.41	81.32	134.77	33.93			19.99	19.99	19.99	19.99
	Order Coordination For Specified Conversion Time, per LSR			UDL	OCOSL		35.74									
SUB-LOOPS																
Sub-Loop Feeder																
	Sub Loop Feeder - DS3 - Per Mile Per Month	I		UE3	1L5SL	12.80										
	Sub Loop Feeder - DS3 - Facility Termination Per Month	I		UE3	USBF1	329.94	3,396.56	406.50	163.61	92.75			18.94	8.42		
	Sub Loop Feeder – STS-1 – Per Mile Per Month	I		UDLSX	1L5SL	12.80										

UNBUNDLED NETWORK ELEMENTS - Georgia														Attachment: 2		Exhibit: B	
CATEGORY		RATE ELEMENTS	Interim	Zone	BCS	USOC	RATES ($)					Svc Order Submitted Elec per LSR	Svc Order Submitted Manually per LSR	Incremental Charge - Manual Svc Order vs. Electronic-1st	Incremental Charge - Manual Svc Order vs. Electronic-Add'l	Incremental Charge - Manual Svc Order vs. Electronic-Disc 1st	Incremental Charge - Manual Svc Order vs. Electronic-Disc Add'l
							Rec	Nonrecurring		Nonrecurring Disconnect		OSS Rates($)					
								First	Add'l	First	Add'l	SOMEC	SOMAN	SOMAN	SOMAN	SOMAN	SOMAN
		Sub Loop Feeder - STS-1 - Facility Termination Per Month	I		UDLSX	USBF7	372.78	3,396.56	406.50	163.61	92.75			18.94	8.42		
UNBUNDLED LOOP CONCENTRATION																	
		Unbundled Loop Concentration - System A (TR008)			ULC	UCT8A	441.42	650.81	650.81					19.99	19.99	19.99	19.99
		Unbundled Loop Concentration - System B (TR008)			ULC	UCT8B	52.97	271.17	271.17					19.99	19.99	19.99	19.99
		Unbundled Loop Concentration - System A (TR303)			ULC	UCT3A	478.93	650.81	650.81					19.99	19.99	19.99	19.99
		Unbundled Loop Concentration - System B (TR303)			ULC	UCT3B	89.26	271.17	271.17					19.99	19.99	19.99	19.99
		Unbundled Loop Concentration - DS1 Loop Interface Card			ULC	UCTCO	5.04	126.57	92.14	33.57	9.40			19.99	19.99	19.99	19.99
		Unbundled Loop Concentration - ISDN Loop Interface (Brite Card)			UDN	ULCC1	8.00	21.07	20.96	10.78	10.71			19.99	19.99	19.99	19.99
		Unbundled Loop Concentration - UDC Loop Interface (Brite Card)			UDC	ULCCU	8.00	21.07	20.96	10.78	10.71			19.99	19.99	19.99	19.99
		Unbundled Loop Concentration - -2 Wire Voice-Loop Start or Ground Start Loop Interface (POTS Card)			UEA	ULCC2	2.00	21.07	20.96	10.78	10.71			19.99	19.99	19.99	19.99
		Unbundled Loop Concentration - 2 Wire Voice - Reverse Battery Loop Interface (SPOTS Card)			UEA	ULCCR	11.89	21.07	20.96	10.78	10.71			19.99	19.99	19.99	19.99
		Unbundled Loop Concentration - 4 Wire Voice Loop Interface (Specials Card)			UEA	ULCC4	7.09	21.07	20.96	10.78	10.71			19.99	19.99	19.99	19.99
		Unbundled Loop Concentration - TEST CIRCUIT Card			ULC	UCTTC	34.67	21.07	20.96	10.78	10.71			19.99	19.99	19.99	19.99
		Unbundled Loop Concentration - Digital 19.2 Kbps Data Loop Interface			UDL	ULCC7	10.51	21.07	20.96	10.78	10.71			19.99	19.99	19.99	19.99
		Unbundled Loop Concentration - Digital 56 Kbps Data Loop Interface			UDL	ULCC5	10.51	21.07	20.96	10.78	10.71			19.99	19.99	19.99	19.99
		Unbundled Loop Concentration - Digital 64 Kbps Data Loop Interface			UDL	ULCC6	10.51	21.07	20.96	10.78	10.71			19.99	19.99	19.99	19.99
UNE OTHER, PROVISIONING ONLY - NO RATE																	
		NID - Dispatch and Service Order for NID installation			UENTW	UNDBX	0.00	0.00									
		UNTW Circuit Id Establishment, Provisioning Only - No Rate			UENTW	UENCE	0.00	0.00									
		Unbundled Contract Name, Provisioning Only - No Rate			UEANL,UEF,UEQ,UENTW	UNECN	0.00	0.00									
UNE OTHER, PROVISIONING ONLY - NO RATE																	
		Unbundled Contact Name, Provisioning Only - no rate			UAL,UCL,UDC,UDL,UDN,UEA,UHL,ULC	UNECN	0.00	0.00									
		Unbundled Sub-Loop Feeder-2 Wire Cross Box Jumper - no rate			UEA,UDN,UCL,UDC	USBFQ	0.00	0.00									
		Unbundled Sub-Loop Feeder-4 Wire Cross Box Jumper - no rate			UEA,USL,UCL,UDL	USBFR	0.00	0.00									
		Unbundled DS1 Loop - Superframe Format Option - no rate			USL	CCOSF	0.00	0.00									
		Unbundled DS1 Loop - Expanded Superframe Format option - no rate			USL	CCOEF	0.00	0.00									
HIGH CAPACITY UNBUNDLED LOCAL LOOP																	
	NOTE: minimum billing period of three months for DS3/STS-1 Local Loop																
		High Capacity Unbundled Local Loop - DS3 - Per Mile per month			UE3	1L5ND	8.90										
		High Capacity Unbundled Local Loop - DS3 - Facility Termination per month			UE3	UE3PX	390.34	639.50	426.40					37.55	37.55	18.03	18.03
		High Capacity Unbundled Local Loop - STS-1 - Per Mile per month			UDLSX	1L5ND	8.90										
		High Capacity Unbundled Local Loop - STS-1 - Facility Termination per month			UDLSX	UDLS1	421.59	639.50	426.40					37.55	37.55	18.03	18.03
LOOP MAKE-UP																	
		Loop Makeup - Preordering Without Reservation, per working or spare facility queried (Manual).			UMK	UMKLW		35.00	35.00								
		Loop Makeup - Preordering With Reservation, per spare facility queried (Manual).			UMK	UMKLP		45.00	45.00								
HIGH FREQUENCY SPECTRUM																	
	LINE SHARING																
	SPLITTERS-CENTRAL OFFICE BASED																
		Line Sharing Splitter, per System 96 Line Capacity			ULS	ULSDA	131.00	0.00	0.00					18.94	8.42		

UNBUNDLED NETWORK ELEMENTS - Georgia													Attachment: 2		Exhibit: B	
CATEGORY	RATE ELEMENTS	Interim	Zone	BCS	USOC	RATES ($)					Svc Order Submitted Elec per LSR	Svc Order Submitted Manually per LSR	Incremental Charge - Manual Svc Order vs. Electronic-1st	Incremental Charge - Manual Svc Order vs. Electronic-Add'l	Incremental Charge - Manual Svc Order vs. Electronic-Disc 1st	Incremental Charge - Manual Svc Order vs. Electronic-Disc Add'l
						Rec	Nonrecurring		Nonrecurring Disconnect		OSS Rates($)					
							First	Add'l	First	Add'l	SOMEC	SOMAN	SOMAN	SOMAN	SOMAN	SOMAN
	Line Sharing Splitter, per System 24 Line Capacity			ULS	ULSDB	32.00	0.00	0.00					18.94	8.42		
	Line Sharing Splitter, Per System, 8 Line Capacity	I		ULS	ULSD8	11.00	0.00	0.00					18.94	8.42		
	Line Sharing-DLEC Owned Splitter in CO-CFA activaton-deactivation (per LSOD)			ULS	ULSDG		131.55	0.00					18.94	8.42		
	END USER ORDERING-CENTRAL OFFICE BASED-HIGH FREQUENCY SPECTRUM AKA LINE SHARING															
	Line Sharing - per Line Activation (BST Owned Splitter)			ULS	ULSDC	0.61	10.51	7.70					18.94	8.42		
	Line Sharing - per Subsequent Activity per Line Rearrangement(BST Owned Splitter			ULS	ULSDS		36.23	13.23					18.94	8.42		
	Line Sharing - per Subsequent Activity per Line Rearrangement(DLEC Owned Splitter			ULS	ULSCS		36.23	13.23					18.94	8.42		
	Line Sharing - per Line Activation (DLEC owned Splitter)	I		ULS	ULSCC	0.61	47.44	19.31					18.94	8.42		
	LINE SPLITTING															
	END USER ORDERING-CENTRAL OFFICE BASED															
	Line Splitting - per line activation DLEC owned splitter	I		UEPSR UEPSB	UREOS	0.61										
	Line Splitting - per line activation BST owned - physical	I		UEPSR UEPSB	UREBP	0.61	53.48	34.48	16.45	12.75			18.94	8.42		
	Line Splitting - per line activation BST owned - virtual	I		UEPSR UEPSB	UREBV	0.61	53.48	34.48	16.45	12.75			18.94	8.42		
	REMOTE SITE HIGH FREQUENCY SPECTRUM															
	SPLITTERS-REMOTE SITE															
	Remote Site Line Share BellSouth Owned Splitter, 24 Port	I		ULS	ULSRB	31.13	136.10	0.00					18.94	8.42		
	Remote Site Line Share Cable Pair Activation CLEC Owned at RS and Deactivation	I		ULS	ULSTG		123.70	0.00					18.94	8.42		
	END USER ORDERING-REMOTE SITE HIGH FREQUENCY SPECTRUM AKA REMOTE SITE LINE SHARING															
	Remote Site Line Share Line Activationfor End User Served at RS, BST Splitter	I		ULS	ULSRC	0.61	10.51	7.70					18.94	8.42		
	RS Line Share Line Activation for End User served at RS, CLEC Splitter	I		ULS	ULSTC	0.61	10.51	7.70					18.94	8.42		
	Remote Site Line Share Subsequent Activity-RS BST Owned Splitter	I		ULS	ULSRS		36.04	11.96					18.94	8.42		
	Remote Site Line Share Subsequent Activity-RS CLEC Owned Splitter	I		ULS	ULSTS		36.04	11.96					18.94	8.42		
UNBUNDLED DEDICATED TRANSPORT																
	NOTE: INTEROFFICE CHANNEL DEDICATED TRANSPORT - minimum billing period - below DS3=one month, DS3/STS-1=four months															
	INTEROFFICE CHANNEL - DEDICATED TRANSPORT															
	Interoffice Channel - Dedicated Transport - 2-Wire Voice Grade - Per Mile per month			U1TVX	1L5XX	0.0222										
	Interoffice Channel - Dedicated Transport- 2- Wire Voice Grade - Facility Termination			U1TVX	U1TV2	17.07	79.61	36.08					18.94	18.94		
	Interoffice Channel - Dedicated Transpor t- 2-Wire Voice Grade Rev Bat. - Per Mile per month			U1TVX	1L5XX	0.0222										
	Interoffice Channel - Dedicated Transport- 2- Wire VG Rev Bat. - Facility Termination			U1TVX	U1TR2	17.07	79.61	36.08					18.94	18.94		
	Interoffice Channel - Dedicated Transport - 56 kbps - per mile per month			U1TDX	1L5XX	0.0222										
	Interoffice Channel - Dedicated Transport - 56 kbps - Facility Termination			U1TDX	U1TD5	16.45	79.61	36.08					18.94	18.94		
	Interoffice Channel - Dedicated Transport - 64 kbps - per mile per month			U1TDX	1L5XX	0.0222										
	Interoffice Channel - Dedicated Transport - 64 kbps - Facility Termination			U1TDX	U1TD6	16.45	79.61	36.08					18.94	18.94		
	Interoffice Channel - Dedicated Channel - DS1 - Per Mile per month			U1TD1	1L5XX	0.4523										
	Interoffice Channel - Dedicated Tranport - DS1 - Facility Termination			U1TD1	U1TF1	78.47	147.07	111.75					18.94	18.94		
	Interoffice Channel - Dedicated Transport - DS3 - Per Mile per month			U1TD3	1L5XX	2.72										
	Interoffice Channel - Dedicated Transport - DS3 - Facility Termination per month			U1TD3	U1TF3	788.00	511.10	330.77					37.55	37.55	18.03	18.03
	Interoffice Channel - Dedicated Transport - STS-1 - Per Mile per month			U1TS1	1L5XX	2.72										

UNBUNDLED NETWORK ELEMENTS - Georgia														Attachment: 2		Exhibit: B	
CATEGORY		RATE ELEMENTS	Interim	Zone	BCS	USOC	RATES ($)					Svc Order Submitted Elec per LSR	Svc Order Submitted Manually per LSR	Incremental Charge - Manual Svc Order vs. Electronic-1st	Incremental Charge - Manual Svc Order vs. Electronic-Add'l	Incremental Charge - Manual Svc Order vs. Electronic-Disc 1st	Incremental Charge - Manual Svc Order vs. Electronic-Disc Add'l
							Rec	Nonrecurring		Nonrecurring Disconnect		OSS Rates($)					
								First	Add'l	First	Add'l	SOMEC	SOMAN	SOMAN	SOMAN	SOMAN	SOMAN
		Interoffice Channel - Dedicated Transport - STS-1 - Facility Termination			U1TS1	U1TFS	783.63	511.10	449.91					61.19	61.19	3.17	3.17
	LOCAL CHANNEL - DEDICATED TRANSPORT																
	NOTE: LOCAL CHANNEL DEDICATED TRANSPORT - minimum billing period = below DS3=one month, DS3/STS-1=four months																
		Local Channel - Dedicated - 2-Wire Voice Grade			ULDVX	ULDV2	13.91	382.95	62.40					18.94	8.42		
		Local Channel - Dedicated - 2-Wire Voice Grade Rev Bat			ULDVX	ULDR2	13.91	382.95	62.40					18.94	18.94		
		Local Channel - Dedicated - 4-Wire Voice Grade			ULDVX	ULDV4	14.99	368.44	64.05					18.94	8.42		
		Local Channel - Dedicated - DS1			ULDD1	ULDF1	38.36	356.15	312.89					44.22	44.22	18.03	18.03
		Local Channel - Dedicated - DS3 - Per Mile per month			ULDD3	1L5NC	6.92										
		Local Channel - Dedicated - DS3 - Facility Termination			ULDD3	ULDF3	515.91	639.50	426.31					37.55	37.55	18.03	18.03
		Local Channel - Dedicated - STS-1- Per Mile per month			ULDS1	1L5NC	6.92										
		Local Channel - Dedicated - STS-1 - Facility Termination			ULDS1	ULDFS	517.56	639.50	426.31					18.94	18.94		
DARK FIBER																	
		Dark Fiber, Four Fiber Strands, Per Route Mile or Fraction Thereof per month - Local Channel			UDF	1L5DC	44.22										
		NRC Dark Fiber - Local Channel			UDF	UDFC4		1,355.29	273.69					18.94	18.94		
		Dark Fiber, Four Fiber Strands, Per Route Mile or Fraction Thereof per month - Interoffice Channel			UDF	1L5DF	44.22										
		NRC Dark Fiber - Interoffice Channel			UDF	UDF14		1,355.29	273.69					18.94	18.94		
		Dark Fiber, Four Fiber Strands, Per Route Mile or Fraction Thereof per month - Local Loop			UDF	1L5DL	44.22										
		NRC Dark Fiber - Local Loop			UDF	UDFL4		1,355.29	273.69					18.94	18.94		
8XX ACCESS TEN DIGIT SCREENING																	
		8XX Access Ten Digit Screening, Per Call			OHD		0.0004868										
		8XX Access Ten Digit Screening, Reservation Charge Per 8XX Number Reserved			OHD	N8R1X		6.57	0.76					18.94	18.94		
		8XX Access Ten Digit Screening, Per 8XX No. Established W/O POTS Translations			OHD			12.81	1.45					18.94	18.94		
		8XX Access Ten Digit Screening, Per 8XX No. Established With POTS Translations			OHD	N8FTX		12.81	1.45					18.94	18.94		
		8XX Access Ten Digit Screening, Customized Area of Service Per 8XX Number			OHD	N8FCX		4.46	2.23					18.94	18.94		
		8XX Access Ten Digit Screening, Multiple InterLATA CXR Routing Per CXR Requested Per 8XX No.			OHD	N8FMX		5.22	2.99					18.94	18.94		
		8XX Access Ten Digit Screening, Change Charge Per Request			OHD	N8FAX		7.33	0.76					18.94	18.94		
		8XX Access Ten Digit Screening, Call Handling and Destination Features			OHD	N8FDX		4.72	4.46					18.94	18.94		
LINE INFORMATION DATA BASE ACCESS (LIDB)																	
		LIDB Common Transport Per Query			OQT		0.0000338										
		LIDB Validation Per Query			OQU		0.0105974										
		LIDB Originating Point Code Establishment or Change			OQT, OQU	NRPBX		50.30						18.94	18.94		
SIGNALING (CCS7)																	
		CCS7 Signaling Termination, Per STP Port			UDB	PT8SX	133.99										
		CCS7 Signaling Usage, Per TCAP Message			UDB		0.000087										
		CCS7 Signaling Connection, Per link (A link)			UDB	TPP++	17.05	131.96	131.96					18.94	18.94		
		CCS7 Signaling Connection, Per link (B link) (also known as D link)			UDB	TPP++	17.05	131.96	131.96					18.94	18.94		
		CCS7 Signaling Usage, Per ISUP Message			UDB		0.0000354										
		CCS7 Signaling Usage Surrogate, per link per LATA			UDB	STU56	340.67										
		CCS7 Signaling Point Code, per Originating Point Code Establishment or Change, per STP affected			UDB	CCAPO		40.00	40.00					18.94	18.94		
		CCS7 Signaling Point Code, per Destination Point Code Establishment or Change, Per Stp Affected			UDB	CCAPD		8.00	8.00					18.94	18.94		
CALLING NAME (CNAM) SERVICE																	
		CNAM for DB Owners, Per Query			OQV		0.01										
		CNAM for Non DB Owners, Per Query			OQV		0.01										
		CNAM (Non-Databs Owner), NRC, applies when using the Character Based User Interface (CHUI)			OQV	CDDCH		595.00	595.00					18.94	18.94		
OPERATOR CALL PROCESSING																	

UNBUNDLED NETWORK ELEMENTS - Georgia														Attachment: 2		Exhibit: B	
CATEGORY		RATE ELEMENTS	Interim	Zone	BCS	USOC	RATES ($)					Svc Order Submitted Elec per LSR	Svc Order Submitted Manually per LSR	Incremental Charge - Manual Svc Order vs. Electronic-1st	Incremental Charge - Manual Svc Order vs. Electronic-Add'l	Incremental Charge - Manual Svc Order vs. Electronic-Disc 1st	Incremental Charge - Manual Svc Order vs. Electronic-Disc Add'l
							Rec	Nonrecurring		Nonrecurring Disconnect		OSS Rates($)					
								First	Add'l	First	Add'l	SOMEC	SOMAN	SOMAN	SOMAN	SOMAN	SOMAN
		Oper. Call Processing - Oper. Provided, Per Min. - Using BST LIDB					1.20										
		Oper. Call Processing - Oper. Provided, Per Min. - Using Foreign LIDB					1.24										
		Oper. Call Processing - Fully Automated, per Call - Using BST LIDB					0.20										
		Oper. Call Processing - Fully Automated, per Call - Using Foreign LIDB					0.20										
INWARD OPERATOR SERVICES																	
		Inward Operator Svcs - Verification, Per Minute					1.15										
		Inward Operator Services - Verification and Emergency Interrupt - Per Minute					1.15										
BRANDING - OPERATOR CALL PROCESSING																	
	Facility based CLEC																
		Recording of Custom Branded OA Announcement				CBAOS		7,000.00	7,000.00					19.99	19.99	19.99	19.99
		Loading of Custom Branded OA Announcement per shelf/NAV per OCN				CBAOL		500.00	500.00					19.99	19.99		
	UNEP CLEC																
		Recording of Custom Branded OA Announcement						7,000.00	7,000.00					19.99	19.99	19.99	19.99
		Loading of Custom Branded OA Announcement per shelf/NAV per OCN						500.00	500.00					19.99	19.99		
	Unbranding via OLNS for UNEP CLEC																
		Loading of OA per OCN (Regional)						1,200.00	1,200.00					19.99	19.99		
DIRECTORY ASSISTANCE SERVICES																	
	DIRECTORY ASSISTANCE ACCESS SERVICE																
		Directory Assistance Access Service Calls, Charge Per Call					0.275										
	DIRECTORY ASSISTANCE CALL COMPLETION ACCESS SERVICE (DACC)																
		Directory Assistance Call Completion Access Service (DACC), Per Call Attempt					0.10										
DIRECTORY ASSISTANCE SERVICES																	
	DIRECTORY ASSISTANCE DATA BASE SERVICE (DADS)																
		Directory Assistance Data Base Service Charge Per Listing					0.04										
		Directory Assistance Data Base Service, per month				DBSOF	150.00										
BRANDING - DIRECTORY ASSISTANCE																	
	Facility Based CLEC																
		Recording and Provisioning of DA Custom Branded Announcement			AMT	CBADA		3,000.00	3,000.00					18.94	8.42		
		Loading of Custom Branded Announcement per Switch per OCN			AMT	CBADC		1,170.00	1,170.00					18.94	8.42		
	UNEP CLEC																
		Recording of DA Custom Branded Announcement						3,000.00	3,000.00					18.94	8.42		
		Loading of DA Custom Branded Announcement per Switch per OCN						1,170.00	1,170.00					18.94	8.42		
	Unbranding via OLNS for UNEP CLEC																
		Loading of DA per OCN (1 OCN per Order)						420.00	420.00					18.94	8.42		
		Loading of DA per Switch per OCN						16.00	16.00					18.94	8.42		
SELECTIVE ROUTING																	
		Selective Routing Per Unique Line Class Code Per Request Per Switch				USRCR		199.56	199.56					33.67	7.88		
VIRTUAL COLLOCATION																	
		Virtual Collocation-2 Wire Cross Connects (Loop) for Line Splitting			UEPSR, UEPSB	VE1LS	0.03	24.56	23.56	9.20	8.30			19.99	19.99		
PHYSICAL COLLOCATION																	
		Physical Collocation-2 Wire Cross Connects (Loop) for Line Splitting			UEPSR, UEPSB	PE1LS	0.0318	11.94	11.46					19.99	19.99		
AIN SELECTIVE CARRIER ROUTING																	
		Regional Service Establishment			SRC	SRCEC		391,788.00						19.99	19.99	19.99	19.99
		End Office Establishment			SRC	SRCEO		320.53	320.53					19.99	19.99	19.99	19.99
		Line/Port NRC, per end user			SRC	SRCLP		2.06	2.06					19.99	19.99	19.99	19.99

CATEGORY	RATE ELEMENTS	Interim	Zone	BCS	USOC	RATES ($)					Svc Order Submitted Elec per LSR	Svc Order Submitted Manually per LSR	Attachment: 2 Incremental Charge - Manual Svc Order vs. Electronic-1st	Attachment: 2 Incremental Charge - Manual Svc Order vs. Electronic-Add'l	Exhibit: B Incremental Charge - Manual Svc Order vs. Electronic-Disc 1st	Exhibit: B Incremental Charge - Manual Svc Order vs. Electronic-Disc Add'l
						Rec	Nonrecurring		Nonrecurring Disconnect		OSS Rates($)					
							First	Add'l	First	Add'l	SOMEC	SOMAN	SOMAN	SOMAN	SOMAN	SOMAN
	Query NRC, per query			SRC		0.000448										
AIN - BELLSOUTH AIN SMS ACCESS SERVICE																
	AIN SMS Access Service - Service Establishment, Per State, Initial Setup			A1N	CAMSE		90.25	90.25					18.94	18.94		
	AIN SMS Access Service - Port Connection - Dial/Shared Access			A1N	CAMDP		29.66	29.66					18.94	18.94		
	AIN SMS Access Service - Port Connection - ISDN Access			A1N	CAM1P		29.66	29.66					18.94	18.94		
	AIN SMS Access Service - User Identification Codes - Per User ID Code			A1N	CAMAU		84.43	84.43					18.94	18.94		
	AIN SMS Access Service - Security Card, Per User ID Code, Initial or Replacement			A1N	CAMRC		35.44	35.44					18.94	18.94		
	AIN SMS Access Service - Storage, Per Unit (100 Kilobytes)					0.0023										
	AIN SMS Access Service - Session, Per Minute					0.0795604										
	AIN SMS Access Service - Company Performed Session, Per Minute					2.08										
AIN - BELLSOUTH AIN TOOLKIT SERVICE																
	AIN Toolkit Service - Service Establishment Charge, Per State, Initial Setup			CAM	BAPSC		86.74	86.74					18.94	18.94		
	AIN Toolkit Service - Training Session, Per Customer				BAPVX		8,348.00	8,348.00					18.94	18.94		
	AIN Toolkit Service - Trigger Access Charge, Per Trigger, Per DN, Term. Attempt				BAPTT		19.13	19.13					18.94	18.94		
	AIN Toolkit Service - Trigger Access Charge, Per Trigger, Per DN, Off-Hook Delay				BAPTD		114.80	114.80					18.94	18.94		
	AIN Toolkit Service - Trigger Access Charge, Per Trigger, Per DN, Off-Hook Immediate				BAPTM		19.13	19.13					18.94	18.94		
	AIN Toolkit Service - Trigger Access Charge, Per Trigger, Per DN, 10-Digit PODP				BAPTO		70.06	70.06					18.94	18.94		
	AIN Toolkit Service - Trigger Access Charge, Per Trigger, Per DN, CDP				BAPTC		70.06	70.06					18.94	18.94		
	AIN Toolkit Service - Trigger Access Charge, Per Trigger, Per DN, Feature Code				BAPTF		70.06	70.06					18.94	18.94		
	AIN Toolkit Service - Query Charge, Per Query					0.0209223										
	AIN Toolkit Service - Type 1 Node Charge, Per AIN Toolkit Subscription, Per Node, Per Query					0.0053137										
	AIN Toolkit Service - SCP Storage Charge, Per SMS Access Account, Per 100 Kilobytes					1.46										
	AIN Toolkit Service - Monthly report - Per AIN Toolkit Service Subscription			CAM	BAPMS	15.96	22.64	22.64					18.94	18.94		
	AIN Toolkit Service - Special Study - Per AIN Toolkit Service Subscription			CAM	BAPLS	0.0861109	22.64	22.64					18.94	18.94		
	AIN Toolkit Service - Call Event Report - Per AIN Toolkit Service Subscription			CAM	BAPDS	15.87	22.64	22.64					18.94	18.94		
	AIN Toolkit Service - Call Event Special Study - Per AIN Toolkit Service Subscription			CAM	BAPES	0.0028704	22.64	22.64					18.94	18.94		
ENHANCED EXTENDED LINK (EELs)																
	NOTE: The monthly recurring and non-recurring charges below will apply and the Switch-As-Is Charge will not apply for EELs provisioned as ' Ordinarily Combined' Network Elements.															
	NOTE: The monthly recurring and the Switch-As-Is Charge and not the non-recurring charges below will apply for EELs provisioned as ' Currently Combined' Network Elements.															
	NOTE: Minimum billing is one month for DS1 and below and three months above DS1 services.															
	2-WIRE VOICE GRADE EXTENDED LOOP WITH DEDICATED DS1 INTEROFFICE TRANSPORT (EEL)															
	First 2-Wire VG Loop(SL2) in a DS1 Interofficed Transport Combination - Zone 1		1	UNCVX	UEAL2	16.84	104.14	78.10					18.94	8.42		
	First 2-Wire VG Grade Loop(SL2) in a DS1 Interofficed Transport Combination - Zone 2		2	UNCVX	UEAL2	19.45	104.14	78.10					18.94	8.42		
	First 2-Wire VG Grade Loop(SL2) in a DS1 Interofficed Transport Combination - Zone 3		3	UNCVX	UEAL2	30.92	104.14	78.10					18.94	8.42		
	Interoffice Transport - Dedicated - DS1 combination - Per Mile per month			UNC1X	1L5XX	0.4523										
	Interoffice Transport - Dedicated - DS1 combination - Facility Termination per month			UNC1X	U1TF1	78.47	194.63	141.51					33.63	27.49	19.88	11.85

UNBUNDLED NETWORK ELEMENTS - Georgia														Attachment: 2		Exhibit: B	
CATEGORY		RATE ELEMENTS	Interim	Zone	BCS	USOC	RATES ($)					Svc Order Submitted Elec per LSR	Svc Order Submitted Manually per LSR	Incremental Charge - Manual Svc Order vs. Electronic-1st	Incremental Charge - Manual Svc Order vs. Electronic-Add'l	Incremental Charge - Manual Svc Order vs. Electronic-Disc 1st	Incremental Charge - Manual Svc Order vs. Electronic-Disc Add'l
							Rec	Nonrecurring		Nonrecurring Disconnect		OSS Rates($)					
								First	Add'l	First	Add'l	SOMEC	SOMAN	SOMAN	SOMAN	SOMAN	SOMAN
		DS1 Channelization System Per Month			UNC1X	MQ1	126.22										
		Voice Grade COCI - DS1 To Ds0 Interface - Per Month			UNCVX	1D1VG	1.17	12.02	8.66					18.94	8.42		
		Each Additional 2-Wire VG Loop(SL 2) in the same DS1 Interoffice Transport Combination - Zone 1		1	UNCVX	UEAL2	16.84	104.14	78.10					18.94	8.42		
		Each Additional 2-Wire VG Loop(SL2) in the same DS1 Interoffice Transport Combination - Zone 2		2	UNCVX	UEAL2	19.45	104.14	78.10					18.94	8.42		
		Each Additional 2-Wire VG Loop(SL2) in the same DS1 Interoffice Transport Combination - Zone 3		3	UNCVX	UEAL2	30.92	104.14	78.10					18.94	8.42		
		Voice Grade COCI - DS1 to DS0 Channel System combination - per month			UNCVX	1D1VG	1.17	12.02	8.66					18.94	8.42		
		Nonrecurring Currently Combined Network Elements Switch -As-Is Charge			UNC1X	UNCCC		12.97	11.27					45.46	15.72		
	4-WIRE VOICE GRADE EXTENDED LOOP WITH DEDICATED DS1 INTEROFFICE TRANSPORT (EEL)																
		First 4-Wire Analog Voice Grade Loop in a DS1 Interoffice Transport Combination - Zone 1		1	UNCVX	UEAL4	22.26	206.95	170.57					18.94	8.42		
		First 4-Wire Analog Voice Grade Loop in a DS1 Interoffice Transport Combination - Zone 2		2	UNCVX	UEAL4	25.70	206.95	170.57					18.94	8.42		
		First 4-Wire Analog Voice Grade Loop in a DS1 Interoffice Transport Combination - Zone 3		3	UNCVX	UEAL4	40.86	206.95	170.57					18.94	8.42		
		Interoffice Transport - Dedicated - DS1 combination - Per Mile Per Month			UNC1X	1L5XX	0.4523										
		Interoffice Transport - Dedicated - DS1 - Facility Termination Per Month			UNC1X	U1TF1	78.47	194.63	141.51					33.63	27.49	19.88	11.85
		Channelization - Channel System DS1 to DS0 combination Per Month			UNC1X	MQ1	126.22										
		Voice Grade COCI - DS1 to DS0 Channel System combination - per month			UNCVX	1D1VG	1.17	12.02	8.66								
		Additional 4-Wire Analog Voice Grade Loop in same DS1 Interoffice Transport Combination - Zone 1		1	UNCVX	UEAL4	22.26	206.95	170.57					18.94	8.42		
		Additional 4-Wire Analog Voice Grade Loop in same DS1 Interoffice Transport Combination - Zone 2		2	UNCVX	UEAL4	25.70	206.95	170.57					18.94	8.42		
		Additional 4-Wire Analog Voice Grade Loop in same DS1 Interoffice Transport Combination - Zone 3		3	UNCVX	UEAL4	40.86	206.95	170.57					18.94	8.42		
		Voice Grade COCI - DS1 to DS0 Channel System combination - per month			UNCVX	1D1VG	1.17	12.02	8.66					18.94	8.42		
		Nonrecurring Currently Combined Network Elements Switch -As-Is Charge			UNC1X	UNCCC		12.97	11.27					45.46	15.72		
	4-WIRE 56 KBPS EXTENDED DIGITAL LOOP WITH DEDICATED DS1 INTEROFFICE TRANSPORT (EEL)																
		First 4-Wire 56Kbps Digital Grade Loop in a DS1 Interoffice Transport Combination - Zone 1		1	UNCDX	UDL56	25.75	384.56	241.20					18.94	8.42		
		First 4-wire 56Kbps Digital Grade Loop in a DS1 Interoffice Transport Combination - Zone 2		2	UNCDX	UDL56	29.74	384.56	241.20					18.94	8.42		
		First 4-Wire 56Kbps Digital Grade Loop in a DS1 Interoffice Transport Combination - Zone 3		3	UNCDX	UDL56	47.27	384.56	241.20					18.94	8.42		
		Interoffice Transport - Dedicated - DS1 combination - Per Mile Per Month			UNC1X	1L5XX	0.4523										
		Interoffice Transport - Dedicated - DS1 - combination Facility Termination Per Month			UNC1X	U1TF1	78.47	194.63	141.51					33.63	27.49	19.88	11.85
		Channelization - Channel System DS1 to DS0 combination Per Month			UNC1X	MQ1	126.22										
		OCU-DP COCI (data) - DS1 to DS0 Channel System - per month (2.4-64kbs)			UNCDX	1D1DD	1.86	12.02	8.66					18.94	8.42		
		Additional 4-Wire 56Kbps Digital Grade Loopin same DS1 Interoffice Transport Combination - Zone 1		1	UNCDX	UDL56	25.75	384.56	241.20					18.94	8.42		
		Additional 4-Wire 56Kbps Digital Grade Loopin same DS1 Interoffice Transport Combination - Zone 2		2	UNCDX	UDL56	29.74	384.56	241.20					18.94	8.42		
		Additional 4-Wire 56Kbps Digital Grade Loopin same DS1 Interoffice Transport Combination - Zone 3		3	UNCDX	UDL56	47.27	384.56	241.20					18.94	8.42		

CATEGORY		RATE ELEMENTS	Interim	Zone	BCS	USOC	RATES ($)					Svc Order Submitted Elec per LSR	Svc Order Submitted Manually per LSR	Attachment: 2 Incremental Charge - Manual Svc Order vs. Electronic-1st	Attachment: 2 Incremental Charge - Manual Svc Order vs. Electronic-Add'l	Exhibit: B Incremental Charge - Manual Svc Order vs. Electronic-Disc 1st	Exhibit: B Incremental Charge - Manual Svc Order vs. Electronic-Disc Add'l
							Rec	Nonrecurring		Nonrecurring Disconnect		OSS Rates($)					
								First	Add'l	First	Add'l	SOMEC	SOMAN	SOMAN	SOMAN	SOMAN	SOMAN
		OCU-DP COCI (data) - DS1 to DS0 Channel System - combination per month (2.4-64kbs)			UNCDX	1D1DD	1.86	12.02	8.66					18.94	8.42		
		Nonrecurring Currently Combined Network Elements Switch -As-Is Charge			UNC1X	UNCCC		12.97	11.27					18.94	8.42		
	4-WIRE 64 KBPS EXTENDED DIGITAL LOOP WITH DEDICATED DS1 INTEROFFICE TRANSPORT (EEL)																
		First 4-Wire 64Kbps Digital Grade Loop in a DS1 Interoffice Transport Combination - Zone 1		1	UNCDX	UDL64	25.75	348.55	241.20					18.94	8.42		
		First 4-Wire 64Kbps Digital Grade Loop in a DS1 Interoffice Transport Combination - Zone 2		2	UNCDX	UDL64	29.74	348.55	241.20					18.94	8.42		
		First 4-Wire 64Kbps Digital Grade Loop in a DS1 Interoffice Transport Combination - Zone 3		3	UNCDX	UDL64	47.27	348.55	241.20					18.94	8.42		
		Interoffice Transport - Dedicated - DS1 combination - Per Mile Per Month			UNC1X	1L5XX	0.4523										
		Interoffice Transport - Dedicated - DS1 combination - Facility Termination Per Month			UNC1X	U1TF1	78.47	194.63	141.51					33.63	27.49	19.88	11.85
		Channelization - Channel System DS1 to DS0 combination Per Month			UNC1X	MQ1	126.22										
		OCU-DP COCI (data) - DS1 to DS0 Channel System combination - per month (2.4-64kbs)			UNCDX	1D1DD	1.86	12.02	8.66					18.94	8.42		
		Additional 4-Wire 64Kbps Digital Grade Loopin same DS1 Interoffice Transport Combination - Zone 1		1	UNCDX	UDL64	25.75	348.55	241.20					18.94	8.42		
		Additional 4-Wire 64Kbps Digital Grade Loopin same DS1 Interoffice Transport Combination - Zone 2		2	UNCDX	UDL64	29.74	348.55	241.20					18.94	8.42		
		Additional 4-Wire 64Kbps Digital Grade Loopin same DS1 Interoffice Transport Combination - Zone 3		3	UNCDX	UDL64	47.27	348.55	241.20					18.94	8.42		
		OCU-DP COCI (data) - DS1 to DS0 Channel System combination - per month (2.4-64kbs)			UNCDX	1D1DD	1.86	12.02	8.66					18.94	8.42		
		Nonrecurring Currently Combined Network Elements Switch -As-Is Charge			UNC1X	UNCCC		12.97	11.27					45.46	15.72		
	4-WIRE DS1 DIGITAL EXTENDED LOOP WITH DEDICATED DS1 INTEROFFICE TRANSPORT (EEL)																
		4-Wire DS1 Digital Loop in Combination with DS1 Interoffice Transport - Zone 1		1	UNC1X	USLXX	55.53	443.20	138.69					18.94	8.42		
		4-Wire DS1 Digital Loop in Combination with DS1 Interoffice Transport - Zone 2		2	UNC1X	USLXX	64.13	443.20	138.69					18.94	8.42		
		4-Wire DS1 Digital Loop in Combination with DS1 Interoffice Transport - Zone 3		3	UNC1X	USLXX	101.93	443.20	138.69					18.94	8.42		
		Interoffice Transport - Dedicated - DS1 combination - Per Mile Per Month			UNC1X	1L5XX	0.4523										
		Interoffice Transport - Dedicated - DS1 combination - Facility Termination Per Month			UNC1X	U1TF1	78.47	194.63	141.51					33.63	27.49	19.88	11.85
		Nonrecurring Currently Combined Network Elements Switch -As-Is Charge			UNC1X	UNCCC		12.97	11.27					45.46	15.72		
	4-WIRE DS1 DIGITAL EXTENDED LOOP WITH DEDICATED DS3 INTEROFFICE TRANSPORT (EEL)																
		First DS1Loop in DS3 Interoffice Transport Combination - Zone 1		1	UNC1X	USLXX	55.53	443.20	138.69					18.94	8.42		
		First DS1Loop in DS3 Interoffice Transport Combination - Zone 2		2	UNC1X	USLXX	64.13	443.20	138.69					18.94	8.42		
		First DS1Loop in DS3 Interoffice Transport Combination - Zone 3		3	UNC1X	USLXX	101.93	443.20	138.69					18.94	8.42		
		Interoffice Transport - Dedicated - DS3 combination - Per Mile Per Month			UNC3X	1L5XX	2.72										
		Interoffice Transport - Dedicated - DS3 - Facility Termination per month			UNC3X	U1TF3	788.00	198.45	153.15					37.55	37.55	18.03	18.03
		DS3 to DS1 Channel System combination per month			UNC3X	MQ3	137.73	196.66	204.61					18.94	8.42		
		DS3 Interface Unit (DS1 COCI) combination per month			UNC1X	UC1D1	11.02	12.02	8.66					18.94	8.42		
		Additional DS1Loop in DS3 Interoffice Transport Combination - Zone 1		1	UNC1X	USLXX	55.53	443.20	138.69					18.94	8.42		
		Additional DS1Loop in DS3 Interoffice Transport Combination - Zone 2		2	UNC1X	USLXX	64.13	443.20	138.69					18.94	8.42		

CATEGORY	RATE ELEMENTS	Interim	Zone	BCS	USOC	RATES ($)					Svc Order Submitted Elec per LSR	Svc Order Submitted Manually per LSR	Attachment: 2 Incremental Charge - Manual Svc Order vs. Electronic-1st	Attachment: 2 Incremental Charge - Manual Svc Order vs. Electronic-Add'l	Exhibit: B Incremental Charge - Manual Svc Order vs. Electronic-Disc 1st	Exhibit: B Incremental Charge - Manual Svc Order vs. Electronic-Disc Add'l
						Rec	Nonrecurring		Nonrecurring Disconnect		OSS Rates($)					
							First	Add'l	First	Add'l	SOMEC	SOMAN	SOMAN	SOMAN	SOMAN	SOMAN
	Additional DS1Loop in DS3 Interoffice Transport Combination - Zone 3		3	UNC1X	USLXX	101.93	443.20	138.69					18.94	8.42		
	DS3 Interface Unit (DS1 COCI) combination per month			UNC1X	UC1D1	11.02	12.02	8.66					18.94	8.42		
	Nonrecurring Currently Combined Network Elements Switch -As-Is Charge			UNC3X	UNCCC		12.97	11.27					45.46	15.72		
2-WIRE VOICE GRADE EXTENDED LOOP/ 2 WIRE VOICE GRADE INTEROFFICE TRANSPORT (EEL)																
	2-WireVG Loop used with 2-wire VG Interoffice Transport Combination - Zone 1		1	UNCVX	UEAL2	16.84	104.14	78.10					18.94	8.42		
	2-WireVG Loop used with 2-wire VG Interoffice Transport Combination - Zone 2		2	UNCVX	UEAL2	19.45	104.14	78.10					18.94	8.42		
	2-WireVG Loop used with 2-wire VG Interoffice Transport Combination - Zone 3		3	UNCVX	UEAL2	30.92	104.14	78.10					18.94	8.42		
	Interoffice Transport - Dedicated - 2-wire VG combination - Per Mile Per Month			UNCVX	1L5XX	0.0222										
	Interoffice Transport - Dedicated - 2- Wire Voice Grade combination - Facility Termination per month			UNCVX	U1TV2	17.07	79.61	36.08					18.94	18.94		
	Nonrecurring Currently Combined Network Elements Switch -As-Is Charge			UNCVX	UNCCC		12.97	11.27					45.46	15.72		
4-WIRE VOICE GRADE EXTENDED LOOP/ 4 WIRE VOICE GRADE INTEROFFICE TRANSPORT (EEL)																
	4-WireVG Loop used with 4-wire VG Interoffice Transport Combination - Zone 1		1	UNCVX	UEAL4	22.26	206.95	170.57					18.94	8.42		
	4-WireVG Loop used with 4-wire VG Interoffice Transport Combination - Zone 2		2	UNCVX	UEAL4	25.70	206.95	170.57					18.94	8.42		
	4-WireVG Loop used with 4-wire VG Interoffice Transport Combination - Zone 3		3	UNCVX	UEAL4	40.86	206.95	170.57					18.94	8.42		
	Interoffice Transport - Dedicated - 4-wire VG combination - Per Mile Per Month			UNCVX	1L5XX	0.0222										
	Interoffice Transport - Dedicated - 4- Wire Voice Grade combination - Facility Termination per month			UNCVX	U1TV4	17.07	79.61	36.08					18.94	18.94		
	Nonrecurring Currently Combined Network Elements Switch -As-Is Charge			UNCVX	UNCCC		12.97	11.27					45.46	15.72		
DS3 DIGITAL EXTENDED LOOP WITH DEDICATED DS3 INTEROFFICE TRANSPORT (EEL)																
	High Capacity Unbundled Local Loop - DS3 combination - Per Mile per month			UNC3X	1L5ND	8.90										
	High Capacity Unbundled Local Loop - DS3 combination - Facility Termination per month			UNC3X	UE3PX	390.34	639.50	426.40					37.55	37.55	18.03	18.03
	Interoffice Transport - Dedicated - DS3 - Per Mile per month			UNC3X	1L5XX	2.72										
	Interoffice Transport - Dedicated - DS3 combination - Facility Termination per per month			UNC3X	U1TF3	788.00	198.45	153.15					37.55	37.55	18.03	18.03
	Nonrecurring Currently Combined Network Elements Switch -As-Is Charge			UNC3X	UNCCC		12.97	11.27					45.46	15.72		
STS1 DIGITAL EXTENDED LOOP WITH DEDICATED STS1 INTEROFFICE TRANSPORT (EEL)																
	High Capacity Unbundled Local Loop - STS1 combination - Per Mile per month			UNCSX	1L5ND	8.90										
	High Capacity Unbundled Local Loop - STS1 combination - Facility Termination per month			UNCSX	UDLS1	421.59	639.50	426.40					37.55	37.55	18.03	18.03
	Interoffice Transport - Dedicated - STS1 combination - Per Mile per month			UNCSX	1L5XX	2.72										
	Interoffice Transport - Dedicated - STS1 combination - Facility Termination per month			UNCSX	U1TFS	783.63	198.45	449.91					37.55	37.55	18.03	18.03
	Nonrecurring Currently Combined Network Elements Switch -As-Is Charge			UNCSX	UNCCC		12.97	11.27					45.46	15.72		
2-WIRE ISDN EXTENDED LOOP WITH DS1 INTEROFFICE TRANSPORT (EEL)																
	First 2-Wire ISDN Loop in a DS1 Interoffice Combination Transport - Zone 1		1	UNCNX	U1L2X	21.89	233.38	180.38					18.94	8.42		
	First 2-Wire ISDN Loop in a DS1 Interoffice Combination Transport - Zone 2		2	UNCNX	U1L2X	25.27	233.38	180.38					18.94	8.42		
	First 2-Wire ISDN Loop in a DS1 Interoffice Combination Transport - Zone 3		3	UNCNX	U1L2X	40.17	233.38	180.38					18.94	8.42		

CATEGORY	RATE ELEMENTS	Interim	Zone	BCS	USOC	RATES ($)					Svc Order Submitted Elec per LSR	Svc Order Submitted Manually per LSR	Attachment: 2 Incremental Charge - Manual Svc Order vs. Electronic-1st	Attachment: 2 Incremental Charge - Manual Svc Order vs. Electronic-Add'l	Exhibit: B Incremental Charge - Manual Svc Order vs. Electronic-Disc 1st	Exhibit: B Incremental Charge - Manual Svc Order vs. Electronic-Disc Add'l
						Rec	Nonrecurring		Nonrecurring Disconnect		OSS Rates($)					
							First	Add'l	First	Add'l	SOMEC	SOMAN	SOMAN	SOMAN	SOMAN	SOMAN
	Interoffice Transport - Dedicated - DS1 combination - Per Mile			UNC1X	1L5XX	0.4523										
	Interoffice Transport - Dedicated - DS1 combintion - Facility Termination per month			UNC1X	U1TF1	78.47	194.63	141.51					33.63	27.49	19.88	11.85
	Channelization - Channel System DS1 to DS0 combination - per month			UNC1X	MQ1	126.22										
	2-wire ISDN COCI (BRITE) - DS1 to DS0 Channel System combination - per month			UNCNX	UC1CA	3.37	12.02	8.66					33.63	27.49	19.88	11.85
	Additional 2-wire ISDN Loop in same DS1Interoffice Transport Combination - Zone 1		1	UNCNX	U1L2X	21.89	233.38	180.38					18.94	8.42		
	Additional 2-wire ISDN Loop in same DS1Interoffice Transport Combination - Zone 2		2	UNCNX	U1L2X	25.27	233.38	180.38					18.94	8.42		
	Additional 2-wire ISDN Loop in same DS1Interoffice Transport Combination - Zone 3		3	UNCNX	U1L2X	40.17	233.38	180.38					18.94	8.42		
	2-wire ISDN COCI (BRITE) - DS1 to DS0 Channel System combintaion- per month			UNCNX	UC1CA	3.37	12.02	8.66					33.63	27.49	19.88	11.85
	Nonrecurring Currently Combined Network Elements Switch -As-Is Charge			UNC1X	UNCCC		12.97	11.27					45.46	15.72		
	4-WIRE DS1 DIGITAL EXTENDED LOOP WITH DEDICATED STS-1 INTEROFFICE TRANSPORT (EEL)															
	First DS1 Loop in STS1 Interoffice Transport Combination - Zone 1		1	UNC1X	USLXX	55.53	443.20	138.69					18.94	8.42		
	First DS1 Loop in STS1 Interoffice Transport Combination - Zone 2		2	UNC1X	USLXX	64.13	443.20	138.69					18.94	8.42		
	First DS1 Loop in STS1 Interoffice Transport Combination - Zone 3		3	UNC1X	USLXX	101.93	443.20	138.69					18.94	8.42		
	Interoffice Transport - Dedicated - STS1 combination - Per Mile Per Month			UNCSX	1L5XX	2.72										
	Interoffice Transport - Dedicated - STS1 combination - Facility Termination			UNCSX	U1TFS	783.63	198.45	449.91					37.55	37.55	18.08	18.03
	STS1 to DS1 Channel System conbination per month			UNCSX	MQ3	182.04	196.66	204.61					37.55	37.55	18.08	18.03
	DS3 Interface Unit (DS1 COCI) combination per month			UNC1X	UC1D1	11.02	12.02	8.66					37.55	37.55	18.08	18.03
	Additional DS1Loop in STS1 Interoffice Transport Combination - Zone 1		1	UNC1X	USLXX	55.53	443.20	138.69					18.94	8.42		
	Additional DS1Loop in STS1 Interoffice Transport Combination - Zone 2		2	UNC1X	USLXX	64.13	443.20	138.69					18.94	8.42		
	Additional DS1Loop in STS1 Interoffice Transport Combination - Zone 3		3	UNC1X	USLXX	101.93	443.20	138.69					18.94	8.42		
	DS3 Interface Unit (DS1 COCI) combination per month			UNC1X	UC1D1	11.02	12.02	8.66					18.94	8.42		
	Nonrecurring Currently Combined Network Elements Switch -As-Is Charge			UNCSX	UNCCC		12.97	11.27					45.46	15.72		
	4-WIRE 56 KBPS DIGITAL EXTENDED LOOP WITH 56 KBPS INTEROFFICE TRANSPORT (EEL)															
	4-wire 56 kbps Loop/4-wire 56 kbps Interoffice Transport Combination - Zone 1		1	UNCDX	UDL56	25.75	384.56	241.20					18.94	8.42		
	4-wire 56 kbps Loop/4-wire 56 kbps Interoffice Transport Combination - Zone 2		2	UNCDX	UDL56	29.74	384.56	241.20					18.94	8.42		
	4-wire 56 kbps Loop/4-wire 56 kbps Interoffice Transport Combination - Zone 3		3	UNCDX	UDL56	47.27	384.56	241.20					18.94	8.42		
	Interoffice Transport - Dedicated - 4-wire 56 kbps combination - Per Mile			UNCDX	1L5XX	0.0222										
	Interoffice Transport - Dedicated - 4-wire 56 kbps combination - Facility Termination			UNCDX	U1TD5	16.45	147.07	111.75					33.63	27.49	19.88	11.85
	Nonrecurring Currently Combined Network Elements Switch -As-Is Charge			UNCDX	UNCCC		12.97	11.27					45.46	15.72		
	4-WIRE 64 KBPS DIGITAL EXTENDED LOOP WITH 64 KBPS INTEROFFICE TRANSPORT (EEL)															
	4-wire 64 kbps Loop/4-wire 64 kbps Interoffice Transport Combination - Zone 1		1	UNCDX	UDL64	25.75	348.55	241.20					18.94	8.42		
	4-wire 64 kbps Loop/4-wire 64 kbps Interoffice Transport Combination - Zone 2		2	UNCDX	UDL64	29.74	348.55	241.20					18.94	8.42		
	4-wire 64 kbps Loop/4-wire 64 kbps Interoffice Transport Combination - Zone 3		3	UNCDX	UDL64	47.27	348.55	241.20					18.94	8.42		

UNBUNDLED NETWORK ELEMENTS - Georgia														Attachment: 2		Exhibit: B	
CATEGORY		RATE ELEMENTS	Interim	Zone	BCS	USOC	RATES ($)					Svc Order Submitted Elec per LSR	Svc Order Submitted Manually per LSR	Incremental Charge - Manual Svc Order vs. Electronic-1st	Incremental Charge - Manual Svc Order vs. Electronic-Add'l	Incremental Charge - Manual Svc Order vs. Electronic-Disc 1st	Incremental Charge - Manual Svc Order vs. Electronic-Disc Add'l
							Rec	Nonrecurring		Nonrecurring Disconnect		OSS Rates($)					
								First	Add'l	First	Add'l	SOMEC	SOMAN	SOMAN	SOMAN	SOMAN	SOMAN
		Interoffice Transport - Dedicated - 4-wire 64 kbps combination - Per Mile			UNCDX	1L5XX	0.0222										
		Interoffice Transport - Dedicated - 4-wire 64 kbps combination - Facility Termination			UNCDX	U1TD6	16.45	147.07	111.75					33.63	27.49	19.88	11.85
		Nonrecurring Currently Combined Network Elements Switch -As-Is Charge			UNCDX	UNCCC		12.97	11.27					45.46	15.72		
ADDITIONAL NETWORK ELEMENTS																	
	When used as a part of a currently combined facility, the non-recurrng charges do not apply, but a Switch As Is charge does apply.																
	When used as ordinarily combined network elements in All States, the non-recurring charges apply and the Switch As Is Charge does not.																
	Nonrecurring Currently Combined Network Elements "Switch As Is" Charge (One applies to each combination)																
		Nonrecurring Currently Combined Network Elements Switch -As-Is Charge - 2 wire/4-Wire VG			UNCVX	UNCCC		12.97	11.27					18.94	18.94		
		Nonrecurring Currently Combined Network Elements Switch -As-Is Charge - 56/64 kbps			UNCDX	UNCCC		12.97	11.27					18.94	18.94		
		Nonrecurring Currently Combined Network Elements Switch -As-Is Charge - DS1			UNC1X	UNCCC		12.97	11.27					18.94	18.94		
		Nonrecurring Currently Combined Network Elements Switch -As-Is Charge - DS3			UNC3X	UNCCC		12.97	11.27					18.94	18.94		
		Nonrecurring Currently Combined Network Elements Switch -As-Is Charge - STS1			UNCSX	UNCCC		12.97	11.27					18.94	18.94		
	NOTE: Local Channel - Dedicated Transport - minimum billing period - Below DS3=one month, DS3 and above=four months																
		Local Channel - Dedicated - 2-Wire Voice Grade			UNCVX	ULDV2	13.91	272.07	60.43					18.94	18.94		
		Local Channel - Dedicated - 4-Wire Voice Grade			UNCVX	ULDV4	14.99	272.07	60.43					18.94	18.94		
		Local Channel - Dedicated - DS1			UNC1X	ULDF1	38.36	356.15	312.89								
		Local Channel - Dedicated - DS3 - Per Mile per month			UNC3X	1L5NC	6.92										
		Local Channel - Dedicated - DS3 - Facility Termination			UNC3X	ULDF3	515.91	639.50	426.31					18.94	18.94		
		Local Channel - Dedicated - STS-1- Per Mile per month			UNCSX	1L5NC	6.92										
		Local Channel - Dedicated - STS-1 - Facility Termination			UNCSX	ULDFS	517.56	639.50	426.31					18.94	18.94		
	Optional Features & Functions:																
		Clear Channel Capability (SF/ESF) Option - Subsequent Activity - per DS1	I		ULDD1, U1TD1, UNC1X, USL	NRCCC		65.02						18.94	8.42		
		C-bit Parity Option - Subsequent Activity - per DS3	i		U1TD3, ULDD3, UE3, UNC3X	NRCC3		50.02						18.94	8.42		
	MULTIPLEXERS																
	NOTE: minimum billing period is one month for DS1 to DS0 Channel System and interfaces																
	NOTE: minimum billing period is three months for DS3 to DS1 Channel System and interfaces																
		DS1 to DS0 Channel System (with the higher-level connected to a collocation in the same SWC) per month			UXTD1	MQ1	126.22	198.22	123.59					14.75	6.55	10.70	
		DS1 to DS0 Channel System (used to channelize a DS1 Local Channel) per month			ULDD1	MQ1	126.22	198.22	123.59					14.75	6.55	10.70	
		DS1 to DS0 Channel System (used to channelize a DS1 Interoffice Channel) per month			U1TD1	MQ1	126.22	198.22	123.59					14.75	6.55	10.70	
		OCU-DP COCI (data) - DS1 to DS0 Channel System - per month (2.4-64kbs) used for a Local Loop			UDL	1D1DD	1.86	12.02	8.66					14.75	6.55	10.70	
		OCU-DP COCI (data) - DS1 to DS0 Channel System - per month (2.4-64kbs) used for connection to a channelized DS1 Local Channel in the same SWC as collocation			U1TUD	1D1DD	1.86	12.02	8.66					14.75	6.55	10.70	
		2-wire ISDN COCI (BRITE) - DS1 to DS0 Channel Systsem - per month for a Local Loop			UDN	UC1CA	3.37	12.02	8.66					14.75	6.55	10.70	
		2-wire ISDN COCI (BRITE) - DS1 to DS0 Channel Systsem - per month used for connection to a channelized DS1 Local Channel in the same SWC as collocation			U1TUB	UC1CA	3.37	12.02	8.66					14.75	6.55	10.70	
		Voice Grade COCI - DS1 to DS0 Channel System - per month used for a Local Loop			UEA	1D1VG	1.17	12.02	8.66					14.75	6.55	10.70	
		Voice Grade COCI - DS1 to DS0 Channel System - per month used for connection to a channelized DS1 Local Channel in the same SWC as collocation			U1TUC	1D1VG	1.17	12.02	8.66					14.75	6.55	10.70	
		DS3 to DS1 Channel System (with the higher level connected to a collocation in the same SWC) per month			UXTD3	MQ3	182.04	265.91	188.78					14.75	6.55	10.70	

UNBUNDLED NETWORK ELEMENTS - Georgia														Attachment: 2		Exhibit: B	
CATEGORY		RATE ELEMENTS	Interim	Zone	BCS	USOC	RATES ($)					Svc Order Submitted Elec per LSR	Svc Order Submitted Manually per LSR	Incremental Charge - Manual Svc Order vs. Electronic-1st	Incremental Charge - Manual Svc Order vs. Electronic-Add'l	Incremental Charge - Manual Svc Order vs. Electronic-Disc 1st	Incremental Charge - Manual Svc Order vs. Electronic-Disc Add'l
							Rec	Nonrecurring		Nonrecurring Disconnect		OSS Rates($)					
								First	Add'l	First	Add'l	SOMEC	SOMAN	SOMAN	SOMAN	SOMAN	SOMAN
		DS3 to DS1 Channel System (used to channelize a DS3 Local Channel) per month			ULDD3	MQ3	182.04	265.91	188.78					14.75	6.55	10.70	
		DS3 to DS1 Channel System (used to channelize a DS3 Interoffice Channel per month			U1TD3	MQ3	182.04	265.91	188.78					14.75	6.55	10.70	
		STS-1 to DS1 Channel System (with the higher level connected to a collocation in the same SWC) per month			UXTS1	MQ3	182.04	265.91	188.78					14.75	6.55	10.70	
		STS-1 to DS1 Channel System (used to channelize a STS-1 Local Channel) per month			ULDS1	MQ3	182.04	265.91	188.78					14.75	6.55	10.70	
		STS-1 to DS1 Channel System (used to channelize a STS-1 Interoffice Channel) per month			U1TS1	MQ3	182.04	265.91	188.78					14.75	6.55	10.70	
		DS1 COCI used with Loop per month			USL	UC1D1	11.02	12.02	8.66					14.75	6.55	10.70	
		DS1 COCI (used for connection to a channelized DS1 Local Channel in the same SWC as collocation) per month			U1TUA	UC1D1	11.02	12.02	8.66					14.75	6.55	10.70	
		DS1 COCI used with Interoffice Channel per month			U1TD1	UC1D1	11.02	12.02	8.66					14.75	6.55	10.70	
		DS3 Interface Unit (DS1 COCI) used with Loop per month			USL, U1TUA	UC1D1	11.02	12.02	8.66					14.75	6.55	10.70	
		DS3 Interface Unit (DS1 COCI) used with Local Channel per month			ULDD1	UC1D1	11.02	12.02	8.66					14.75	6.55	10.70	
		DS3 Interface Unit (DS1 COCI) used with Interoffice Channel per month			U1TD1	UC1D1	11.02	12.02	8.66					14.75	6.55	10.70	
	Sub-Loop Feeder																
		Unbundled Sub-Loop Feeder Loop, 4-Wire DS1 - Statewide		sw	UNC1X	USBFG	79.30	203.69	128.76	124.09	34.80						
UNBUNDLED LOCAL EXCHANGE SWITCHING(PORTS)																	
	Exchange Ports																
	NOTE: Although the Port Rate includes all available features in GA, KY, LA & TN, the desired features will need to be ordered using retail USOCs																
	2-WIRE VOICE GRADE LINE PORT RATES (RES)																
		Exchange Ports - 2-Wire Analog Line Port- Res.			UEPSR	UEPRL	1.85	17.16	17.16					18.94	8.42		
		Exchange Ports - 2-Wire Analog Line Port with Caller ID - Res.			UEPSR	UEPRC	1.85	17.16	17.16					18.94	8.42		
		Exchange Ports - 2-Wire Analog Line Port outgoing only - Res.			UEPSR	UEPRO	1.85	17.16	17.16					18.94	8.42		
		Exchange Ports - 2-Wire VG unbundled res, low usage line port with Caller ID (LUM)			UEPSR	UEPAP	1.85		17.16					18.94	8.42		
		Exchange Ports - 2-Wire Voice Georgia basic dialing port without Caller ID			UEPSR	UEPWC	1.85	17.16	17.16					18.94	8.42		
		2-Wire voice unbundled Georgia basic dialing port for use with Caller ID - res			UEPSR	UEPWQ	1.85	17.16	17.16					18.94	8.42		
		2-Wire voice unbundled Georgia basic dialing port - outgoing only			UEPSR	UEPWR	1.85	17.16	17.16					18.94	8.42		
		2-Wire voice unbundled Low Usage Line Port without Caller ID Capability			UEPSR	UEPRT	1.85	17.16	17.16					18.94	8.42		
		Subsequent Activity			UEPSR	USASC	0.00	0.00	0.00					18.94	8.42		
	FEATURES																
		All Available Vertical Features			UEPSR	UEPVF	0.00	0.00	0.00					18.94	8.42		
	2-WIRE VOICE GRADE LINE PORT RATES (BUS)																
		Exchange Ports - 2-Wire Analog Line Port without Caller ID - Bus			UEPSB	UEPBL	1.85	17.16	17.16					18.94	8.42		
		Exchange Ports - 2-Wire VG unbundled Line Port with unbundled port with Caller+E484 ID - Bus.			UEPSB	UEPBC	1.85	17.16	17.16					18.94	8.42		
		Exchange Ports - 2-Wire Voice Georgia Business Basic Dialing Port, with Caller ID capability			UEPSB	UEPWP	1.85	17.16	17.16					18.94	8.42		
		Exchange Ports - 2-Wire Analog Line Port outgoing only - Bus.			UEPSB	UEPBO	1.85	17.16	17.16					18.94	8.42		
		Exhange Ports - 2-Wire VG unbundled incoming only port with Caller ID - Bus			UEPSB	UEPB1	1.85	17.16	17.16					18.94	8.42		
		Exchange Ports - 2-Wire Voice Georgia Business Dialing Plan without Caller ID			UEPSB	UEPWD	1.85	17.16	17.16					18.94	8.42		
		2-Wire voice unbundled Incoming Only Port without Caller ID Capability			UEPSB	UEPBE	1.85	17.16	17.16					18.94	8.42		
		Subsequent Activity			UEPSB	USASC	0.00	0.00	0.00					18.94	8.42		

UNBUNDLED NETWORK ELEMENTS - Georgia														Attachment: 2		Exhibit: B	
CATEGORY	RATE ELEMENTS	Interim	Zone	BCS	USOC	RATES ($)					Svc Order Submitted Elec per LSR	Svc Order Submitted Manually per LSR	Incremental Charge - Manual Svc Order vs. Electronic-1st	Incremental Charge - Manual Svc Order vs. Electronic-Add'l	Incremental Charge - Manual Svc Order vs. Electronic-Disc 1st	Incremental Charge - Manual Svc Order vs. Electronic-Disc Add'l
						Rec	Nonrecurring		Nonrecurring Disconnect		OSS Rates($)					
							First	Add'l	First	Add'l	SOMEC	SOMAN	SOMAN	SOMAN	SOMAN	SOMAN
FEATURES																
	All Available Vertical Features			UEPSB	UEPVF	0.00	0.00	0.00					18.94	8.42		
EXCHANGE PORT RATES (DID & PBX)																
	2-Wire VG Unbundled 2-Way PBX Trunk - Res			UEPSE	UEPRD	1.85	17.16	17.16					18.94	8.42		
	2-Wire voice unbundled Georgia extended dialing port, PBX 1-Way Outdial Trunk			UEPSE	UEPPO	1.85	17.16	17.16					18.94	8.42		
	2-Wire VG Line Side Unbundled 2-Way PBX Trunk - Bus			UEPSP	UEPPC	1.85	17.16	17.16					18.94	8.42		
	2-Wire VG Line Side Unbundled Outward PBX Trunk - Bus			UEPSP	UEPPO	1.85	17.16	17.16					18.94	8.42		
	2-Wire VG Line Side Unbundled Incoming PBX Trunk - Bus			UEPSP	UEPP1	1.85	17.16	17.16					18.94	8.42		
	2-Wire Analog Long Distance Terminal PBX Trunk - Bus			UEPSP	UEPLD	1.85	17.16	17.16					18.94	8.42		
	2-Wire Voice Unbundled PBX LD Terminal Ports			UEPSP	UEPLD	1.85	17.16	17.16					18.94	8.42		
	2-Wire Vice Unbundled 2-Way PBX Usage Port			UEPSP	UEPXA	1.85	17.16	17.16					18.94	8.42		
	2-Wire Voice Unbundled PBX Toll Terminal Hotel Ports			UEPSP	UEPXB	1.85	17.16	17.16					18.94	8.42		
	2-Wire Voice Unbundled PBX LD DDD Terminals Port			UEPSP	UEPXC	1.85	17.16	17.16					18.94	8.42		
	2-Wire Voice Unbundled PBX LD Terminal Switchboard Port			UEPSP	UEPXD	1.85	17.16	17.16					18.94	8.42		
	2-Wire Voice Unbundled PBX LD Terminal Switchboard IDD Capable Port			UEPSP	UEPXE	1.85	17.16	17.16					18.94	8.42		
	2-Wire Voice Unbundled 2-Way PBX Hotel/Hospital Economy Administrative Calling Port			UEPSP	UEPXL	1.85	17.16	17.16					18.94	8.42		
	2-Wire Voice Unbundled 2-Way PBX Hotel/Hospital Economy Room Calling Port			UEPSP	UEPXM	1.85	17.16	17.16					18.94	8.42		
	2-Wire Voice Unbundled 1-Way Outgoing PBX Hotel/Hospital Discount Room Calling Port			UEPSP	UEPXO	1.85	17.16	17.16					18.94	8.42		
	2-Wire Voice Unbundled 1-Way Outgoing PBX Measured Port			UEPSP	UEPXS	1.85	17.16	17.16					18.94	8.42		
	2-Wire voice unbundled Georgia basic dialing port - 1-Way Oudial Trunk			UEPSP	UEPWS	1.85	17.16	17.16					18.94	8.42		
	2-Wire voice unbundled Georgia basic dialing port - 2-Way Trunk			UEPSP	UEPWT	1.85	17.16	17.16					18.94	8.42		
	2-Wire voice unbundled Georgia basic dialing port - 2-way PBX Trunk			UEPSP	UEPPQ	1.85	17.16	17.16					18.94	8.42		
	2-Wire voice unbundled Georgia basic dialing port - PBX LD Terminal Ports			UEPSP	UEPPS	1.85	17.16	17.16					18.94	8.42		
	2-Wire voice unbundled Georgia basic dialing port - PBX Toll Terminal Ports			UEPSP	UEPPT	1.85	17.16	17.16					18.94	8.42		
	2-Wire voice unbundled Georgia basic dialing port - PBX LD DDD Terminal Port			UEPSP	UEPPU	1.85	17.16	17.16					18.94	8.42		
	2-Wire voice unbundled Georgia basic dialing port - PBX LD Terminal Switchboard Port			UEPSP	UEPPV	1.85	17.16	17.16					18.94	8.42		
	2-Wire voice unbundled Georgia basic dialing port - PBX LD Terminal Switchboard DDD Capable Port			UEPSP	UEPPW	1.85	17.16	17.16					18.94	8.42		
	Subsequent Activity			UEPSP	USASC	0.00	0.00	0.00					18.94	8.42		
FEATURES																
	All Available Vertical Features			UEPSP UEPSE	UEPVF	0.00	0.00	0.00					18.94	8.42		
EXCHANGE PORT RATES (COIN)																
	Exchange Ports - Coin Port					2.05	17.16	17.16					18.94	8.42		
NOTE: Transmission/usage charges associated with POTS circuit switched usage will also apply to circuit switched voice and/or circuit switched data transmission by B-Channels associated with 2-wire ISDN ports.																
NOTE: Access to B Channel or D Channel Packet capabilities will be available only through BFR/New Business Request Process. Rates for the packet capabilities will be determined via the Bona Fide Request/New Business Request Process.																
UNBUNDLED LOCAL EXCHANGE SWITCHING(PORTS)																
EXCHANGE PORT RATES																
	Exchange Ports - 2-Wire DID Port			UEPEX	UEPP2	11.35	61.91	61.91					19.99	19.99	19.99	19.99
	Exchange Ports - DDITS Port - 4-Wire DS1 Port with DID capability			UEPDD	UEPDD	120.80	108.38	60.88					19.99	19.99	19.99	19.99
	Exchange Ports - 2-Wire ISDN Port (See Notes below.)			UEPTX UEPSX	U1PMA	13.47	47.37	47.37					39.98	39.98		
	All Features Offered			UEPTX UEPSX	UEPVF	0.00	0.00	0.00								
NOTE: Transmission/usage charges associated with POTS circuit switched usage will also apply to circuit switched voice and/or circuit switched data transmission by B-Channels associated with 2-wire ISDN ports.																
NOTE: Access to B Channel or D Channel Packet capabilities will be available only through BFR/New Business Request Process. Rates for the packet capabilities will be determined via the Bona Fide Request/New Business Request Process.																
	Exchange Ports - 2-Wire ISDN Port -- Channel Profiles			UEPTX UEPSX	U1UMA	0.00	0.00	0.00								
	Exchange Ports - 4-Wire ISDN DS1 Port			UEPEX	UEPEX	163.16	186.80	186.80					37.88	37.88		
UNBUNDLED PORT with REMOTE CALL FORWARDING CAPABILITY																

UNBUNDLED NETWORK ELEMENTS - Georgia													Attachment: 2		Exhibit: B	
CATEGORY	RATE ELEMENTS	Interim	Zone	BCS	USOC	RATES ($)					Svc Order Submitted Elec per LSR	Svc Order Submitted Manually per LSR	Incremental Charge - Manual Svc Order vs. Electronic-1st	Incremental Charge - Manual Svc Order vs. Electronic-Add'l	Incremental Charge - Manual Svc Order vs. Electronic-Disc 1st	Incremental Charge - Manual Svc Order vs. Electronic-Disc Add'l
						Rec	Nonrecurring		Nonrecurring Disconnect		OSS Rates($)					
							First	Add'l	First	Add'l	SOMEC	SOMAN	SOMAN	SOMAN	SOMAN	SOMAN
	UNBUNDLED REMOTE CALL FORWARDING SERVICE - RESIDENCE															
	Unbundled Remote Call Forwarding Service, Area Calling, Res			UEPVR	UERAC	1.85	17.16	17.16					18.94	8.42		
	Unbundled Remote Call Forwarding Service, Local Calling - Res			UEPVR	UERLC	1.85	17.16	17.16					18.94	8.42		
	Unbundled Remote Call Forwarding Service, InterLATA - Res			UEPVR	UERTE	1.85	17.16	17.16					18.94	8.42		
	Unbundled Remote Call Forwarding Service, IntraLATA - Res			UEPVR	UERTR	1.85	17.16	17.16					18.94	8.42		
	Non-Recurring															
	Unbundled Remote Call Forwarding Service - Conversion - Switch-as-is			UEPVR	USAC2		2.01	0.31					33.67	7.88	11.17	3.91
	Unbundled Remote Call Forwarding Service - Conversion with allowed change (PIC and LPIC)			UEPVR	USACC		2.01	0.31								
	UNBUNDLED REMOTE CALL FORWARDING - Bus															
	Unbundled Remote Call Forwarding Service, Area Calling - Bus			UEPVB	UERAC	1.85	17.16	17.16					18.94	8.42		
	Unbundled Remote Call Forwarding Service, Local Calling - Bus			UEPVB	UERLC	1.85	17.16	17.16					18.94	8.42		
	Unbundled Remote Call Forwarding Service, InterLATA - Bus			UEPVB	UERTE	1.85	17.16	17.16					18.94	8.42		
	Unbundled Remote Call Forwarding Service, IntraLATA - Bus			UEPVB	UERTR	1.85	17.16	17.16					18.94	8.42		
	Unbundled Remote Call Forwarding Service Expanded and Exception Local Calling			UEPVB	UERVJ	1.85	17.16	17.16					18.94	8.42		
	Non-Recurring															
	Unbundled Remote Call Forwarding Service - Conversion - Switch-as-is			UEPVB	USAC2		2.01	0.31					33.67	7.88	11.17	3.91
	Unbundled Remote Call Forwarding Service - Conversion with allowed change (PIC and LPIC)			UEPVB	USACC		2.01	0.31								
UNBUNDLED LOCAL SWITCHING, PORT USAGE																
	End Office Switching (Port Usage)															
	End Office Switching Function, Per MOU					0.0016333										
	End Office Trunk Port - Shared, Per MOU					0.0001564										
	Tandem Switching (Port Usage) (Local or Access Tandem)															
	Tandem Switching Function Per MOU					0.0006757										
	Tandem Trunk Port - Shared, Per MOU					0.0002126										
	Common Transport															
	Common Transport - Per Mile, Per MOU					0.000008										
	Common Transport - Facilities Termination Per MOU					0.0004152										
UNBUNDLED PORT/LOOP COMBINATIONS - COST BASED RATES																
	Cost Based Rates are applied where BellSouth is required by FCC and/or State Commission rule to provide Unbundled Local Switching or Switch Ports.															
	Features shall apply to the Unbundled Port/Loop Combination - Cost Based Rate section in the same manner as they are applied to the Stand-Alone Unbundled Port section of this Rate Exhibit.															
	End Office and Tandem Switching Usage and Common Transport Usage rates in the Port section of this rate exhibit shall apply to all combinations of loop/port network elements except for UNE Coin Port/Loop Combinations.															
	The first and additional Port nonrecurring charges apply to Not Currently Combined Combos. For Currently Combined Combos the nonrecurring charges shall be those identified in the Nonrecurring - Currently Combined sections.															
	2-WIRE VOICE GRADE LOOP WITH 2-WIRE LINE PORT (RES)															
	UNE Port/Loop Combination Rates															
	2-Wire VG Loop/Port Combo - Zone 1		1			12.59										
	2-Wire VG Loop/Port Combo - Zone 2		2			14.26										
	2-Wire VG Loop/Port Combo - Zone 3		3			21.62										
	UNE Loop Rates															
	2-Wire Voice Grade Loop (SL1) - Zone 1		1	UEPRX	UEPLX	10.80										
	2-Wire Voice Grade Loop (SL1) - Zone 2		2	UEPRX	UEPLX	12.47										
	2-Wire Voice Grade Loop (SL1) - Zone 3		3	UEPRX	UEPLX	19.83										
	2-Wire Voice Grade Line Port Rates (Res)															
	2-Wire voice unbundled port - residence			UEPRX	UEPRL	1.79	22.14	15.25	8.45	3.91			33.67	7.88	11.17	3.91
	2-Wire voice unbundled port with Caller ID - res			UEPRX	UEPRC	1.79	22.14	15.25	8.45	3.91			37.06	7.88	11.17	3.91
	2-Wire voice unbundled port outgoing only - res			UEPRX	UEPRO	1.79	22.14	15.25	8.45	3.91			33.67	7.88	11.17	3.91
	2-Wire voice unbundles res, low usage line port with Caller ID (LUM)			UEPRX	UEPAP	1.79	22.14	15.25	8.45	3.91			33.67	7.88	11.17	3.91
	2-Wire voice unbundled Georgia basic dialing port without Caller ID capability - res			UEPRX	UEPWC	1.79	22.14	15.25	8.45	3.91			33.67	7.88	11.17	3.91
	2-Wire voice unbundled Georgia basic dialing port for use with Caller ID - res			UEPRX	UEPWQ	1.79	22.14	15.25	8.45	3.91			33.67	7.88	11.17	3.91

UNBUNDLED NETWORK ELEMENTS - Georgia													Attachment: 2		Exhibit: B	
CATEGORY	RATE ELEMENTS	Interim	Zone	BCS	USOC	RATES ($)					Svc Order Submitted Elec per LSR	Svc Order Submitted Manually per LSR	Incremental Charge - Manual Svc Order vs. Electronic-1st	Incremental Charge - Manual Svc Order vs. Electronic-Add'l	Incremental Charge - Manual Svc Order vs. Electronic-Disc 1st	Incremental Charge - Manual Svc Order vs. Electronic-Disc Add'l
						Rec	Nonrecurring		Nonrecurring Disconnect		OSS Rates($)					
							First	Add'l	First	Add'l	SOMEC	SOMAN	SOMAN	SOMAN	SOMAN	SOMAN
	2-Wire voice unbundled Georgia basic dialing port - outgoing only			UEPRX	UEPWR	1.79	22.14	15.25	8.45	3.91			33.67	7.88	11.17	3.91
	2-Wire voice unbundled Low Usage Line Port without Caller ID Capability			UEPRX	UEPRT	1.79	22.14	15.25	8.45	3.91			33.67	7.88	11.17	3.91
FEATURES																
	All Features Offered			UEPRX	UEPVF	0.00	0.00	0.00					33.67	7.88	11.17	3.91
LOCAL NUMBER PORTABILITY																
	Local Number Portability (1 per port)			UEPRX	LNPCX	0.35										
NONRECURRING CHARGES (NRCs) - CURRENTLY COMBINED																
	2-Wire Voice Grade Loop / Line Port Combination - Conversion - Switch-as-is			UEPRX	USAC2		2.01	0.3108					33.67	7.88	11.17	3.91
	2-Wire Voice Grade Loop / Line Port Combination - Conversion - Switch with change			UEPRX	USACC		2.01	0.3108					33.67	7.88		
ADDITIONAL NRCs																
	2-Wire Voice Grade Loop/Line Port Combination - Subsequent Activity			UEPRX	USAS2	0.00	0.00	0.00					33.67	7.88	11.17	3.91
2-WIRE VOICE GRADE LOOP WITH 2-WIRE LINE PORT (BUS)																
UNE Port/Loop Combination Rates																
	2-Wire VG Loop/Port Combo - Zone 1		1			12.59										
	2-Wire VG Loop/Port Combo - Zone 2		2			14.26										
	2-Wire VG Loop/Port Combo - Zone 3		3			21.62										
UNE Loop Rates																
	2-Wire Voice Grade Loop (SL1) - Zone 1		1	UEPBX	UEPLX	10.80										
	2-Wire Voice Grade Loop (SL1) - Zone 2		2	UEPBX	UEPLX	12.47										
	2-Wire Voice Grade Loop (SL1) - Zone 3		3	UEPBX	UEPLX	19.83										
2-Wire Voice Grade Line Port (Bus)																
	2-Wire voice unbundled port without Caller ID - bus			UEPBX	UEPBL	1.79	22.14	15.25	8.45	3.91			33.67	7.88	11.17	3.91
	2-Wire voice unbundled port with Caller + E484 ID - bus			UEPBX	UEPBC	1.79	22.14	15.25	8.45	3.91			33.67	7.88	11.17	3.91
	2-Wire voice unbundled port outgoing only - bus			UEPBX	UEPBO	1.79	22.14	15.25	8.45	3.91			33.67	7.88	11.17	3.91
	2-Wire voice unbundled incoming only port with Caller ID - Bus			UEPBX	UEPB1	1.79	22.14	15.25	8.45	3.91			33.67	7.88	11.17	3.91
	2-Wire voice unbundled Georgia basic dialing port, without Caller ID capability - bus			UEPBX	UEPWD	1.79	22.14	15.25	8.45	3.91			33.67	7.88	11.17	3.91
	2-Wire voice unbundled Georgia basic dialing port for use with Caller ID - bus			UEPBX	UEPWP	1.79	22.14	15.25	8.45	3.91			33.67	7.88	11.17	3.91
	2-Wire voice unbundled Incoming Only Port without Caller ID Capability			UEPBX	UEPBE	1.79	22.14	15.25	8.45	3.91			33.67	7.88	11.17	3.91
LOCAL NUMBER PORTABILITY																
	Local Number Portability (1 per port)			UEPBX	LNPCX	0.35										
FEATURES																
	All Features Offered			UEPBX	UEPVF	0.00	0.00	0.00					33.67	7.88	11.17	3.91
NONRECURRING CHARGES (NRCs) - CURRENTLY COMBINED																
	2-Wire Voice Grade Loop / Line Port Combination - Conversion - Switch-as-is			UEPBX	USAC2		2.01	0.3108					33.67	7.88	11.17	3.91
	2-Wire Voice Grade Loop / Line Port Combination - Conversion - Switch with change			UEPBX	USACC		2.01	0.3108								
ADDITIONAL NRCs																
	2-Wire Voice Grade Loop/Line Port Combination - Subsequent Activity			UEPBX	USAS2		0.00	0.00					33.67	7.88	11.17	3.91
2-WIRE VOICE GRADE LOOP WITH 2-WIRE LINE PORT (RES - PBX)																
UNE Port/Loop Combination Rates																
	2-Wire VG Loop/Port Combo - Zone 1		1			12.59										
	2-Wire VG Loop/Port Combo - Zone 2		2			14.26										
	2-Wire VG Loop/Port Combo - Zone 3		3			21.62										
UNE Loop Rates																
	2-Wire Voice Grade Loop (SL 1) - Zone 1		1	UEPRG	UEPLX	10.80										
	2-Wire Voice Grade Loop (SL 1) - Zone 2		2	UEPRG	UEPLX	12.47										
	2-Wire Voice Grade Loop (SL 1) - Zone 3		3	UEPRG	UEPLX	19.83										
2-Wire Voice Grade Line Port Rates (RES - PBX)																

UNBUNDLED NETWORK ELEMENTS - Georgia														Attachment: 2		Exhibit: B	
CATEGORY		RATE ELEMENTS	Interim	Zone	BCS	USOC	RATES ($)					Svc Order Submitted Elec per LSR	Svc Order Submitted Manually per LSR	Incremental Charge - Manual Svc Order vs. Electronic-1st	Incremental Charge - Manual Svc Order vs. Electronic-Add'l	Incremental Charge - Manual Svc Order vs. Electronic-Disc 1st	Incremental Charge - Manual Svc Order vs. Electronic-Disc Add'l
							Rec	Nonrecurring		Nonrecurring Disconnect		OSS Rates($)					
								First	Add'l	First	Add'l	SOMEC	SOMAN	SOMAN	SOMAN	SOMAN	SOMAN
		2-Wire VG Unbundled Combination 2-Way PBX Trunk Port - Res			UEPRG	UEPRD	1.79	22.14	15.25	8.45	3.91			33.67	7.88	11.17	3.91
		2-Wire voice unbundled Georgia extended dialing port, PBX 1-Way Outdial Trunk			UEPRG	UEPPO	1.79	22.14	15.25	8.45	3.91			33.67	7.88	11.17	3.91
	LOCAL NUMBER PORTABILITY																
		Local Number Portability (1 per port)			UEPRG	LNPCP	3.15	0.00	0.00					33.67	7.88	11.17	3.91
	FEATURES																
		All Features Offered			UEPRG	UEPVF	0.00	0.00	0.00					33.67	7.88	11.17	3.91
	NONRECURRING CHARGES (NRCs) - CURRENTLY COMBINED																
		2-Wire Voice Grade Loop/ Line Port Combination (PBX) - Conversion - Switch-As-Is			UEPRG	USAC2		2.01	0.3108					33.67	7.88	11.17	3.91
		2-Wire Voice Grade Loop/ Line Port Combination (PBX) - Conversion - Switch with Change			UEPRG	USACC		2.01	0.3108					33.67	7.88	11.17	3.91
	ADDITIONAL NRCs																
		2-Wire Voice Grade Loop/ Line Port Combination (PBX) - Subsequent Activity			UEPRG	USAS2	0.00	0.00	0.00					33.67	7.88	11.17	3.91
		PBX Subsequent Activity - Change/Rearrange Multiline Hunt Group						14.64	14.64					19.99	19.99	19.99	19.99
	2-WIRE VOICE GRADE LOOP WITH 2-WIRE LINE PORT (BUS - PBX)																
	UNE Port/Loop Combination Rates																
		2-Wire VG Loop/Port Combo - Zone 1		1			12.59										
		2-Wire VG Loop/Port Combo - Zone 2		2			14.26										
		2-Wire VG Loop/Port Combo - Zone 3		3			21.62										
	UNE Loop Rates																
		2-Wire Voice Grade Loop (SL 1) - Zone 1		1	UEPPX	UEPLX	10.80										
		2-Wire Voice Grade Loop (SL 1) - Zone 2		2	UEPPX	UEPLX	12.47										
		2-Wire Voice Grade Loop (SL 1) - Zone 3		3	UEPPX	UEPLX	19.83										
	2-Wire Voice Grade Line Port Rates (BUS - PBX)																
		Line Side Unbundled Combination 2-Way PBX Trunk Port - Bus			UEPPX	UEPPC	1.79	22.14	15.25	8.45	3.91			33.67	7.88	11.17	3.91
		Line Side Unbundled Outward PBX Trunk Port - Bus			UEPPX	UEPPO	1.79	22.14	15.25	8.45	3.91			33.67	7.88	11.17	3.91
		Line Side Unbundled Incoming PBX Trunk Port - Bus			UEPPX	UEPP1	1.79	22.14	15.25	8.45	3.91			33.67	7.88	11.17	3.91
		2-Wire Voice Unbundled PBX LD Terminal Ports			UEPPX	UEPLD	1.79	22.14	15.25	8.45	3.91			33.67	7.88	11.17	3.91
		2-Wire Voice Unbundled 2-Way Combination PBX Usage Port			UEPPX	UEPXA	1.79	22.14	15.25	8.45	3.91			37.06	7.88	11.17	3.91
		2-Wire Voice Unbundled PBX Toll Terminal Hotel Ports			UEPPX	UEPXB	1.79	22.14	15.25	8.45	3.91			33.67	7.88	11.17	3.91
		2-Wire Voice Unbundled PBX LD DDD Terminals Port			UEPPX	UEPXC	1.79	22.14	15.25	8.45	3.91			33.67	7.88	11.17	3.91
		2-Wire Voice Unbundled PBX LD Terminal Switchboard Port			UEPPX	UEPXD	1.79	22.14	15.25	8.45	3.91			33.67	7.88	11.17	3.91
		2-Wire Voice Unbundled PBX LD Terminal Switchboard IDD Capable Port			UEPPX	UEPXE	1.79	22.14	15.25	8.45	3.91			33.67	7.88	11.17	3.91
		2-Wire Voice Unbundled 2-Way PBX Hotel/Hospital Economy Administrative Calling Port			UEPPX	UEPXL	1.79	22.14	15.25	8.45	3.91			33.67	7.88	11.17	3.91
		2-Wire Voice Unbundled 2-Way PBX Hotel/Hospital Economy Room Calling Port			UEPPX	UEPXM	1.79	22.14	15.25	8.45	3.91			33.67	7.88	11.17	3.91
		2-Wire Voice Unbundled 1-Way Outgoing PBX Hotel/Hospital Discount Room Calling Port			UEPPX	UEPXO	1.79	22.14	15.25	8.45	3.91			33.67	7.88	11.17	3.91
		2-Wire Voice Unbundled 1-Way Outgoing PBX Measured Port			UEPPX	UEPXS	1.79	22.14	15.25	8.45	3.91			33.67	7.88	11.17	3.91
		2-Wire voice unbundled Georgia basic dialing port - 1-Way Oudial Trunk			UEPPX	UEPWS	1.79	22.14	15.25	8.45	3.91			33.67	7.88	11.17	3.91
		2-Wire voice unbundled Georgia basic dialing port - 2-Way Trunk			UEPPX	UEPWT	1.79	22.14	15.25	8.45	3.91			33.67	7.88	11.17	3.91
		2-Wire voice unbundled Georgia basic dialing port - 2-way PBX Trunk			UEPPX	UEPPQ	1.79	22.14	15.25	8.45	3.91			33.67	7.88	11.17	3.91
		2-Wire voice unbundled Georgia basic dialing port - PBX LD Terminal Ports			UEPPX	UEPPS	1.79	22.14	15.25	8.45	3.91			33.67	7.88	11.17	3.91
		2-Wire voice unbundled Georgia basic dialing port - PBX Toll Terminal Ports			UEPPX	UEPPT	1.79	22.14	15.25	8.45	3.91			33.67	7.88	11.17	3.91
		2-Wire voice unbundled Georgia basic dialing port - PBX LD DDD Terminal Port			UEPPX	UEPPU	1.79	22.14	15.25	8.45	3.91			33.67	7.88	11.17	3.91

CATEGORY	RATE ELEMENTS	Interim	Zone	BCS	USOC	RATES ($)					Svc Order Submitted Elec per LSR	Svc Order Submitted Manually per LSR	Attachment: 2 Incremental Charge - Manual Svc Order vs. Electronic-1st	Attachment: 2 Incremental Charge - Manual Svc Order vs. Electronic-Add'l	Exhibit: B Incremental Charge - Manual Svc Order vs. Electronic-Disc 1st	Exhibit: B Incremental Charge - Manual Svc Order vs. Electronic-Disc Add'l
						Rec	Nonrecurring		Nonrecurring Disconnect		OSS Rates($)					
							First	Add'l	First	Add'l	SOMEC	SOMAN	SOMAN	SOMAN	SOMAN	SOMAN
	2-Wire voice unbundled Georgia basic dialing port - PBX LD Terminal Switchboard Port			UEPPX	UEPPV	1.79	22.14	15.25	8.45	3.91			33.67	7.88	11.17	3.91
	2-Wire voice unbundled Georgia basic dialing port - PBX LD Terminal Switchboard DDD Capable Port			UEPPX	UEPPW	1.79	22.14	15.25	8.45	3.91			33.67	7.88	11.17	3.91
															11.17	3.91
	2-Wire voice unbundled Georgia basic dialing port - PBX 2-Way Trunk			UEPPX	UEPPC	1.79	22.14	15.25	8.45	3.91			33.67	7.88	11.17	3.91
LOCAL NUMBER PORTABILITY																
	Local Number Portability (1 per port)			UEPPX	LNPCP	3.15	0.00	0.00					33.67	7.88	11.17	3.91
FEATURES																
	All Features Offered			UEPPX	UEPVF	0.00	0.00	0.00					33.67	7.88	11.17	3.91
NONRECURRING CHARGES (NRCs) - CURRENTLY COMBINED																
	2-Wire Voice Grade Loop/ Line Port Combination (PBX) - Conversion - Switch-As-Is			UEPPX	USAC2		2.01	0.3108					33.67	7.88	11.17	3.91
	2-Wire Voice Grade Loop/ Line Port Combination (PBX) - Conversion - Switch with Change			UEPPX	USACC		2.01	0.3108					33.67	7.88	11.17	3.91
ADDITIONAL NRCs																
	2-Wire Voice Grade Loop/ Line Port Combination (PBX) - Subsequent Activity			UEPPX	USAS2	0.00	0.00	0.00					33.67	7.88	11.17	3.91
	PBX Subsequent Activity - Change/Rearrange Multiline Hunt Group						14.64	14.64					19.99	19.99	19.99	19.99
2-WIRE VOICE GRADE LOOP WITH 2-WIRE ANALOG LINE COIN PORT																
UNE Port/Loop Combination Rates																
	2-Wire VG Coin Port/Loop Combo – Zone 1		1			12.69										
	2-Wire VG Coin Port/Loop Combo – Zone 2		2			14.36										
	2-Wire VG Coin Port/Loop Combo – Zone 3		3			21.72										
UNE Loop Rates																
	2-Wire Voice Grade Loop (SL1) - Zone 1		1	UEPCO	UEPLX	10.80										
	2-Wire Voice Grade Loop (SL1) - Zone 2		2	UEPCO	UEPLX	12.47										
	2-Wire Voice Grade Loop (SL1) - Zone 3		3	UEPCO	UEPLX	19.83										
2-Wire Voice Grade Line Ports (COIN)																
	2-Wire Coin 2-Way with Operator Screening (GA)			UEPCO	UEPGC	1.89	22.14	15.25	8.45	3.91			33.67	7.88	11.17	3.91
	2-Wire Coin 2-Way with Operator Screening and Blocking: 011, 900/976, 1+DDD (GA)			UEPCO	UEP2G	1.89	22.14	15.25	8.45	3.91			33.67	7.88	11.17	3.91
	2-Wire Coin 2-Way with Operator Screening and 011 Blocking (GA)			UEPCO	UEPGA	1.89	22.14	15.25	8.45	3.91			33.67	7.88	11.17	3.91
	2-Wire Coin 2-Way with Operator Screening and 900/976 Blocking (GA)			UEPCO	UEPGB	1.89	22.14	15.25	8.45	3.91			33.67	7.88	11.17	3.91
	2-Wire Coin 2-Way with Operator Screening and Blocking: 900/976, 1+DDD, 011+, and Local (GA)			UEPCO	UEPCH	1.89	22.14	15.25	8.45	3.91			33.67	7.88	11.17	3.91
	2-Wire Coin Outward with Operator Screening and 011 Blocking (GA, KY, MS)			UEPCO	UEPRJ	1.89	22.14	15.25	8.45	3.91			33.67	7.88	11.17	3.91
	2-Wire Coin Outward with Operator Screening and Blocking: 900/976, 1+DDD, 011+, and Local (FL, GA)			UEPCO	UEPCQ	1.89	22.14	15.25	8.45	3.91			33.67	7.88	11.17	3.91
	2-Wire 2-Way Smartline with 900/976 (all states except LA)			UEPCO	UEPCK	1.89	22.14	15.25	8.45	3.91			33.67	7.88	11.17	3.91
	2-Wire Coin Outward Smartline with 900/976 (all states except LA)			UEPCO	UEPCR	1.89	22.14	15.25	8.45	3.91			33.67	7.88	11.17	3.91
ADDITIONAL UNE COIN PORT/LOOP (RC)																
	UNE Coin Port/Loop Combo Usage (Flat Rate)			UEPCO	URECU	3.59	0.00	0.00	0.00	0.00			33.67	7.88	11.17	3.91
LOCAL NUMBER PORTABILITY																
	Local Number Portability (1 per port)			UEPCO	LNPCX	0.35										
NONRECURRING CHARGES - CURRENTLY COMBINED																
	2-Wire Voice Grade Loop / Line Port Combination - Conversion - Switch-as-is			UEPCO	USAC2		2.01	0.3108					33.67	7.88	11.17	3.91
	2-Wire Voice Grade Loop / Line Port Combination - Conversion - Switch with change			UEPCO	USACC		2.01	0.31					33.67	7.88	11.17	3.91
ADDITIONAL NRCs																
	2-Wire Voice Grade Loop/Line Port Combination - Subsequent Activity			UEPCO	USAS2		0.00	0.00					33.67	7.88	11.17	3.91

UNBUNDLED NETWORK ELEMENTS - Georgia														Attachment: 2		Exhibit: B	
CATEGORY	RATE ELEMENTS	Interim	Zone	BCS	USOC	RATES ($)					Svc Order Submitted Elec per LSR	Svc Order Submitted Manually per LSR	Incremental Charge - Manual Svc Order vs. Electronic-1st	Incremental Charge - Manual Svc Order vs. Electronic-Add'l	Incremental Charge - Manual Svc Order vs. Electronic-Disc 1st	Incremental Charge - Manual Svc Order vs. Electronic-Disc Add'l
						Rec	Nonrecurring		Nonrecurring Disconnect		OSS Rates($)					
							First	Add'l	First	Add'l	SOMEC	SOMAN	SOMAN	SOMAN	SOMAN	SOMAN
2-WIRE VOICE LOOP/ 2WIRE VOICE GRADE IO TRANSPORT/ 2-WIRE LINE PORT (RES)																
UNE Port/Loop Combination Rates																
	2-Wire VG Loop/IO Tranport/Port Combo - Zone 1		1			18.69										
	2-Wire VG Loop/IO Tranport/Port Combo - Zone 2		2			21.30										
	2-Wire VG Loop/IO Tranport/Port Combo - Zone 3		3			32.77										
UNE Loop Rates																
	2-Wire Voice Grade Loop (SL2) - Zone 1		1	UEPFR	UECF2	16.84										
	2-Wire Voice Grade Loop (SL2) - Zone 2		2	UEPFR	UECF2	19.45										
	2-Wire Voice Grade Loop (SL2) - Zone 3		3	UEPFR	UECF2	30.92										
2-Wire Voice Grade Line Port Rates (Res)																
	2-Wire voice unbundled port - residence			UEPFR	UEPRL	1.85	121.33	95.26	8.45	3.91			33.67	7.88	11.17	3.91
	2-Wire voice unbundled port with Caller ID - res			UEPFR	UEPRC	1.85	121.33	95.26	8.45	3.91			37.06	7.88	11.17	3.91
	2-Wire voice unbundled port outgoing only - res			UEPFR	UEPRO	1.85	121.33	95.26	8.45	3.91			33.67	7.88	11.17	3.91
	2-Wire voice unbundles res, low usage line port with Caller ID (LUM)			UEPFR	UEPAP	1.85	121.33	95.26	8.45	3.91			33.67	7.88	11.17	3.91
	2-Wire voice unbundled Georgia basic dialing port, without Caller ID capability - res			UEPFR	UEPWC	1.85	121.33	95.26	8.45	3.91			33.67	7.88	11.17	3.91
	2-Wire voice unbundled Georgia basic dialing port for use with Caller ID - res			UEPFR	UEPWQ	1.85	121.33	95.26	8.45	3.91			33.67	7.88	11.17	3.91
	2-Wire voice unbundled Georgia basic dialing port - outgoing only			UEPFR	UEPWR	1.85	121.33	95.26	8.45	3.91			33.67	7.88	11.17	3.91
INTEROFFICE TRANSPORT																
	Interoffice Transport - Dedicated - 2 Wire Voice Grade - Facility Termination			UEPFR	U1TV2	17.07	79.61	36.08								
	Interoffice Transport - Dedicated - 2 Wire Voice Grade - Per Mile or Fraction Mile			UEPFR	1L5XX	0.0222										
FEATURES																
	All Features Offered			UEPFR	UEPVF	0.00	0.00	0.00					33.67	7.88	11.17	3.91
LOCAL NUMBER PORTABILITY																
	Local Number Portability (1 per port)			UEPFR	LNPCX	0.35										
NONRECURRING CHARGES (NRCs) - CURRENTLY COMBINED																
	2-Wire Loop / Dedicated IO Transport / 2 Wire Line Port Combination - Conversion - Switch-as-is			UEPFR	USAC2		93.83	93.83					33.67	7.88	11.17	3.91
	2-Wire Loop / Dedicated IO Transport / 2 Wire Line Port Combination - Conversion - Switch-With-Change			UEPFR	USACC		93.83	93.83					33.67	7.88		
2-WIRE VOICE LOOP/ 2WIRE VOICE GRADE IO TRANSPORT/ 2-WIRE LINE PORT (BUS)																
UNE Port/Loop Combination Rates																
	2-Wire VG Loop/IO Tranport/Port Combo - Zone 1		1			18.69										
	2-Wire VG Loop/IO Tranport/Port Combo - Zone 2		2			21.30										
	2-Wire VG Loop/IO Tranport/Port Combo - Zone 3		3			32.77										
UNE Loop Rates																
	2-Wire Voice Grade Loop (SL2) - Zone 1		1	UEPFB	UECF2	16.84										
	2-Wire Voice Grade Loop (SL2) - Zone 2		2	UEPFB	UECF2	19.45										
	2-Wire Voice Grade Loop (SL2) - Zone 3		3	UEPFB	UECF2	30.92										
2-Wire Voice Grade Line Port (Bus)																
	2-Wire voice unbundled port without Caller ID - bus			UEPFB	UEPBL	1.85	121.33	95.26	8.45	3.91			33.67	7.88	11.17	3.91
	2-Wire voice unbundled port with Caller + E484 ID - bus			UEPFB	UEPBC	1.85	121.33	95.26	8.45	3.91			33.67	7.88	11.17	3.91
	2-Wire voice unbundled port outgoing only - bus			UEPFB	UEPBO	1.85	121.33	95.26	8.45	3.91			33.67	7.88	11.17	3.91
	2-Wire voice unbundled incoming only port with Caller ID - Bus			UEPFB	UEPB1	1.85	121.33	95.26	8.45	3.91			33.67	7.88	11.17	3.91
	2-Wire voice unbundled Georgia basic dialing port, without Caller ID capability - bus			UEPFB	UEPWD	1.85	121.33	95.26	8.45	3.91			33.67	7.88	11.17	3.91
	2-Wire voice unbundled Georgia basic dialing port for use with Caller ID - bus			UEPFB	UEPWP	1.85	121.33	95.26	8.45	3.91			33.67	7.88	11.17	3.91
LOCAL NUMBER PORTABILITY																
	Local Number Portability (1 per port)			UEPFB	LNPCX	0.35										
INTEROFFICE TRANSPORT																
	Interoffice Transport - Dedicated - 2 Wire Voice Grade - Facility Termination			UEPFB	U1TV2	17.07	79.61	36.08								

CATEGORY	RATE ELEMENTS	Interim	Zone	BCS	USOC	RATES ($)					Svc Order Submitted Elec per LSR	Svc Order Submitted Manually per LSR	Attachment: 2 Incremental Charge - Manual Svc Order vs. Electronic-1st	Attachment: 2 Incremental Charge - Manual Svc Order vs. Electronic-Add'l	Exhibit: B Incremental Charge - Manual Svc Order vs. Electronic-Disc 1st	Exhibit: B Incremental Charge - Manual Svc Order vs. Electronic-Disc Add'l
						Rec	Nonrecurring		Nonrecurring Disconnect		OSS Rates($)					
							First	Add'l	First	Add'l	SOMEC	SOMAN	SOMAN	SOMAN	SOMAN	SOMAN
	Interoffice Transport - Dedicated - 2 Wire Voice Grade - Per Mile or Fraction Mile			UEPFB	1L5XX	0.0222										
FEATURES																
	All Features Offered			UEPFB	UEPVF	0.00	0.00	0.00					33.67	7.88	11.17	3.91
NONRECURRING CHARGES (NRCs) - CURRENTLY COMBINED																
	2-Wire Loop / Dedicated IO Transport / 2 Wire Line Port Combination - Conversion - Switch-as-is			UEPFB	USAC2		93.83	93.83					33.67	7.88	11.17	3.91
	2-Wire Loop / Dedicated IO Transport / 2 Wire Line Port Combination - Conversion - Switch with change			UEPFB	USACC		93.83	93.83								
2-WIRE VOICE GRADE LOOP WITH 2-WIRE LINE PORT (BUS - PBX)																
UNE Port/Loop Combination Rates																
	2-Wire VG Loop/IO Tranport/Port Combo - Zone 1		1			18.69										
	2-Wire VG Loop/IO Tranport/Port Combo - Zone 2		2			21.30										
	2-Wire VG Loop/IO Tranport/Port Combo - Zone 3		3			32.77										
UNE Loop Rates																
	2-Wire Voice Grade Loop (SL2) - Zone 1		1	UEPFP	UECF2	16.84										
	2-Wire Voice Grade Loop (SL2) - Zone 2		2	UEPFP	UECF2	19.45										
	2-Wire Voice Grade Loop (SL2) - Zone 3		3	UEPFP	UECF2	30.92										
2-Wire Voice Grade Line Port Rates (BUS - PBX)																
	Line Side Unbundled Combination 2-Way PBX Trunk Port - Bus			UEPFP	UEPPC	1.85	121.33	95.26	8.45	3.91			33.67	7.88	11.17	3.91
	Line Side Unbundled Outward PBX Trunk Port - Bus			UEPFP	UEPPO	1.85	121.33	95.26	8.45	3.91			33.67	7.88	11.17	3.91
	Line Side Unbundled Incoming PBX Trunk Port - Bus			UEPFP	UEPP1	1.85	121.33	95.26	8.45	3.91			33.67	7.88	11.17	3.91
	2-Wire Voice Unbundled PBX LD Terminal Ports			UEPFP	UEPLD	1.85	121.33	95.26	8.45	3.91			33.67	7.88	11.17	3.91
	2-Wire Voice Unbundled 2-Way Combination PBX Usage Port			UEPFP	UEPXA	1.85	121.33	95.26	8.45	3.91			37.06	7.88	11.17	3.91
	2-Wire Voice Unbundled PBX Toll Terminal Hotel Ports			UEPFP	UEPXB	1.85	121.33	95.26	8.45	3.91			33.67	7.88	11.17	3.91
	2-Wire Voice Unbundled PBX LD DDD Terminals Port			UEPFP	UEPXC	1.85	121.33	95.26	8.45	3.91			33.67	7.88	11.17	3.91
	2-Wire Voice Unbundled PBX LD Terminal Switchboard Port			UEPFP	UEPXD	1.85	121.33	95.26	8.45	3.91			33.67	7.88	11.17	3.91
	2-Wire Voice Unbundled PBX LD Terminal Switchboard IDD Capable Port			UEPFP	UEPXE	1.85	121.33	95.26	8.45	3.91			33.67	7.88	11.17	3.91
	2-Wire Voice Unbundled 2-Way PBX Hotel/Hospital Economy Administrative Calling Port			UEPFP	UEPXL	1.85	121.33	95.26	8.45	3.91			33.67	7.88	11.17	3.91
	2-Wire Voice Unbundled 2-Way PBX Hotel/Hospital Economy Room Calling Port			UEPFP	UEPXM	1.85	121.33	95.26	8.45	3.91			33.67	7.88	11.17	3.91
	2-Wire Voice Unbundled 1-Way Outgoing PBX Hotel/Hospital Discount Room Calling Port			UEPFP	UEPXO	1.85	121.33	95.26	8.45	3.91			33.67	7.88	11.17	3.91
	2-Wire Voice Unbundled 1-Way Outgoing PBX Measured Port			UEPFP	UEPXS	1.85	121.33	95.26	8.45	3.91			33.67	7.88	11.17	3.91
	2-Wire voice unbundled Georgia basic dialing port - 1-Way Oudial Trunk			UEPFP	UEPWS	1.85	121.33	95.26	8.45	3.91			33.67	7.88	11.17	3.91
	2-Wire voice unbundled Georgia basic dialing port - 2-Way Trunk			UEPFP	UEPWT	1.85	121.33	95.26	8.45	3.91			33.67	7.88	11.17	3.91
LOCAL NUMBER PORTABILITY																
	Local Number Portability (1 per port)			UEPFP	LNPCP	3.15	0.00	0.00					33.67	7.88	11.17	3.91
INTEROFFICE TRANSPORT																
	Interoffice Transport - Dedicated - 2 Wire Voice Grade - Facility Termination			UEPFP	U1TV2	17.07	79.61	36.08								
	Interoffice Transport - Dedicated - 2 Wire Voice Grade - Per Mile or Fraction Mile			UEPFP	1L5XX	0.0222										
FEATURES																
	All Features Offered			UEPFP	UEPVF	0.00	0.00	0.00					33.67	7.88	11.17	3.91
NONRECURRING CHARGES (NRCs) - CURRENTLY COMBINED																
	2-Wire Loop / Dedicated IO Transport / 2 Wire Line Port Combination - Conversion - Switch-as-is			UEPFP	USAC2		93.83	93.83					33.67	7.88	11.17	3.91
	2-Wire Loop / Dedicated IO Transport / 2 Wire Line Port Combination - Conversion - Switch with change			UEPFP	USACC		93.83	93.83					33.67	7.88	11.17	3.91
UNBUNDLED PORT/LOOP COMBINATIONS - COST BASED RATES																
2-WIRE VOICE GRADE LOOP- BUS ONLY - WITH 2-WIRE DID TRUNK PORT																
UNE Port/Loop Combination Rates																
	2-Wire VG Loop/2-Wire DID Trunk Port Combo - UNE Zone 1		1			28.19										

CATEGORY	RATE ELEMENTS	Interim	Zone	BCS	USOC	RATES ($) Rec	Nonrecurring First	Nonrecurring Add'l	Nonrecurring Disconnect First	Nonrecurring Disconnect Add'l	Svc Order Submitted Elec per LSR SOMEC	Svc Order Submitted Manually per LSR SOMAN	Incremental Charge - Manual Svc Order vs. Electronic-1st SOMAN	Incremental Charge - Manual Svc Order vs. Electronic-Add'l SOMAN	Incremental Charge - Manual Svc Order vs. Electronic-Disc 1st SOMAN	Incremental Charge - Manual Svc Order vs. Electronic-Disc Add'l SOMAN
							OSS Rates($)									
	2-Wire VG Loop/2-Wire DID Trunk Port Combo - UNE Zone 2		2			30.80										
	2-Wire VG Loop/2-Wire DID Trunk Port Combo - UNE Zone 3		3			42.27										
UNE Loop Rates																
	2-Wire Analog Voice Grade Loop - (SL2) - UNE Zone 1		1	UEPPX	UECD1	16.84										
	2-Wire Analog Voice Grade Loop - (SL2) - UNE Zone 2		2	UEPPX	UECD1	19.45										
	2-Wire Analog Voice Grade Loop - (SL2) - UNE Zone 3		3	UEPPX	UECD1	30.92										
UNE Port Rate																
	Exchange Ports - 2-Wire DID Port			UEPPX	UEPD1	11.35	166.08	140.01					33.67	7.88		
NONRECURRING CHARGES - CURRENTLY COMBINED																
	2-Wire Voice Grade Loop / 2-Wire DID Trunk Port Combination - Switch-as-is			UEPPX	USAC1		93.38	93.38					33.67	7.88		
	2-Wire Voice Grade Loop / 2-Wire DID Trunk Port Conversion with BellSouth Allowable Changes			UEPPX	USA1C		93.38	93.38					33.67	7.88		
ADDITIONAL NRCs																
Telephone Number/Trunk Group Establisment Charges																
	DID Trunk Termination (One Per Port)			UEPPX	NDT	0.00	0.00	0.00								
	DID Numbers, Establish Trunk Group and Provide First Group of 20 DID Numbers			UEPPX	NDZ	0.00	0.00	0.00								
	Additional DID Numbers for each Group of 20 DID Numbers			UEPPX	ND4	0.00	0.00	0.00								
	DID Numbers, Non- consecutive DID Numbers , Per Number			UEPPX	ND5	0.00	0.00	0.00								
	Reserve Non-Consecutive DID numbers			UEPPX	ND6	0.00	0.00	0.00								
	Reserve DID Numbers			UEPPX	NDV	0.00	0.00	0.00								
LOCAL NUMBER PORTABILITY																
	Local Number Portability (1 per port)			UEPPX	LNPCP	3.15	0.00	0.00								
2-WIRE ISDN DIGITAL GRADE LOOP WITH 2-WIRE ISDN DIGITAL LINE SIDE PORT																
UNE Port/Loop Combination Rates																
	2W ISDN Digital Grade Loop/2W ISDN Digital Line Side Port - UNE Zone 1		1	UEPPB UEPPR		35.36										
	2W ISDN Digital Grade Loop/2W ISDN Digital Line Side Port - UNE Zone 2		2	UEPPB UEPPR		38.74										
	2W ISDN Digital Grade Loop/2W ISDN Digital Line Side Port - UNE Zone 3		3	UEPPB UEPPR		53.64										
UNE Loop Rates																
	2-Wire ISDN Digital Grade Loop - UNE Zone 1		1	UEPPB UEPPR	USL2X	21.89							19.99	19.99		
	2-Wire ISDN Digital Grade Loop - UNE Zone 2		2	UEPPB UEPPR	USL2X	25.27							19.99	19.99		
	2-Wire ISDN Digital Grade Loop - UNE Zone 3		3	UEPPB UEPPR	USL2X	40.17							19.99	19.99		
UNE Port Rate																
	Exchange Port - 2-Wire ISDN Line Side Port			UEPPB UEPPR	UEPPB	13.47	280.75	227.72					19.99	19.99		
NONRECURRING CHARGES - CURRENTLY COMBINED																
	2-Wire ISDN Digital Grade Loop / 2-Wire ISDN Line Side Port Combination - Conversion			UEPPB UEPPR	USACB	0.00	93.38	93.38					19.99	19.99		
ADDITIONAL NRCs																
	2-Wire ISDN Loop / 2-Wire ISDN Port Combination - Sub Actvy - Non Feature/Add Trunk			UEPPB UEPPR	USASB		165.95						19.99	19.99		
LOCAL NUMBER PORTABILITY																
	Local Number Portability (1 per port)			UEPPB UEPPR	LNPCX	0.35	0.00	0.00								
B-CHANNEL USER PROFILE ACCESS:																
	CVS/CSD (DMS/5ESS)			UEPPB UEPPR	U1UCA	0.00	0.00	0.00								
	CVS (EWSD)			UEPPB UEPPR	U1UCB	0.00	0.00	0.00								
	CSD			UEPPB UEPPR	U1UCC	0.00	0.00	0.00								
B-CHANNEL AREA PLUS USER PROFILE ACCESS: (AL,KY,LA,MS SC,MS, & TN)																
USER TERMINAL PROFILE																
	User Terminal Profile (EWSD only)			UEPPB UEPPR	U1UMA	0.00	0.00	0.00								
VERTICAL FEATURES																
	All Vertical Features - One per Channel B User Profile			UEPPB UEPPR	UEPVF	0.00	0.00	0.00					19.99	19.99		
INTEROFFICE CHANNEL MILEAGE																
	Interoffice Channel mileage each, including first mile and facilities termination			UEPPB UEPPR	M1GNC	16.47	79.61	36.08					19.99	19.99		

CATEGORY	RATE ELEMENTS	Interim	Zone	BCS	USOC	RATES ($) Rec	Nonrecurring First	Nonrecurring Add'l	Nonrecurring Disconnect First	Nonrecurring Disconnect Add'l	Svc Order Submitted Elec per LSR	Svc Order Submitted Manually per LSR	Attachment: 2 Incremental Charge - Manual Svc Order vs. Electronic-1st	Attachment: 2 Incremental Charge - Manual Svc Order vs. Electronic-Add'l	Exhibit: B Incremental Charge - Manual Svc Order vs. Electronic-Disc 1st	Exhibit: B Incremental Charge - Manual Svc Order vs. Electronic-Disc Add'l
											OSS Rates($)					
											SOMEC	SOMAN	SOMAN	SOMAN	SOMAN	SOMAN
	Interoffice Channel mileage each, additional mile			UEPPB UEPPR	M1GNM	0.0222	0.00	0.00				0.00				
	4-WIRE DS1 DIGITAL LOOP WITH 4-WIRE ISDN DS1 DIGITAL TRUNK PORT															
	UNE Port/Loop Combination Rates															
	4W DS1 Digital Loop/4W ISDN DS1 Digital Trunk Port - UNE Zone 1		1	UEPPP		218.69										
	4W DS1 Digital Loop/4W ISDN DS1 Digital Trunk Port - UNE Zone 2		2	UEPPP		227.29										
	4W DS1 Digital Loop/4W ISDN DS1 Digital Trunk Port - UNE Zone 3		3	UEPPP		265.09										
	UNE Loop Rates															
	4-Wire DS1 Digital Loop - UNE Zone 1		1	UEPPP	USL4P	55.53							19.99	19.99		
	4-Wire DS1 Digital Loop - UNE Zone 2		2	UEPPP	USL4P	64.13							19.99	19.99		
	4-Wire DS1 Digital Loop - UNE Zone 3		3	UEPPP	USL4P	101.93							19.99	19.99		
	UNE Port Rate															
	Exchange Ports - 4-Wire ISDN DS1 Port			UEPPP	UEPPP	163.16	616.78	454.98					19.99	19.99		
	NONRECURRING CHARGES - CURRENTLY COMBINED															
	4-Wire DS1 Digital Loop / 4-Wire ISDN DS1 Digital Trunk Port Combination - Conversion -Switch-as-is			UEPPP	USACP	0.00	269.96	269.96					19.99	19.99		
	ADDITIONAL NRCs															
	4-Wire DS1 Loop/4-W ISDN Digtl Trk Port - Subsqt Actvy-Inward/two way Tel Nos. (except NC)			UEPPP	PR7TF		0.9686									
	4-Wire DS1 Loop / 4-Wire ISDN DS1 Digital Trunk Port - Outward Tel Numbers (All States except NC)			UEPPP	PR7TO		22.75	22.75								
	4-Wire DS1 Loop / 4-Wire ISDN DS1 Digital Trk Port - Subsequent Inward Tel Numbers			UEPPP	PR7ZT		45.49	45.49								
	LOCAL NUMBER PORTABILITY															
	Local Number Portability (1 per port)			UEPPP	LNPCN	1.75										
	INTERFACE (Provsioning Only)															
	Voice/Data			UEPPP	PR71V	0.00	0.00	0.00								
	Digital Data			UEPPP	PR71D	0.00	0.00	0.00								
	Inward Data			UEPPP	PR71E	0.00	0.00	0.00								
	New or Additional "B" Channel															
	New or Additional - Voice/Data B Channel			UEPPP	PR7BV	0.00	28.71						19.99	19.99		
	New or Additional - Digital Data B Channel			UEPPP	PR7BF	0.00	28.71						19.99	19.99		
	New or Additional Inward Data B Channel			UEPPP	PR7BD	0.00	28.71						19.99	19.99		
	CALL TYPES															
	Inward			UEPPP	PR7C1	0.00	0.00	0.00								
	Outward			UEPPP	PR7CO	0.00	0.00	0.00								
	Two-way			UEPPP	PR7CC	0.00	0.00	0.00								
	Interoffice Channel Mileage															
	Fixed Each Including First Mile			UEPPP	1LN1A	78.9223	147.07	111.75	0.00				19.99	19.99		
	Each Airline-Fractional Additional Mile			UEPPP	1LN1B	0.4523										
	4-WIRE DS1 DIGITAL LOOP WITH 4-WIRE DDITS TRUNK PORT															
	UNE Port/Loop Combination Rates															
	4W DS1 Digital Loop/4W DDITS Trunk Port - UNE Zone 1		1	UEPDC		176.33										
	4W DS1 Digital Loop/4W DDITS Trunk Port - UNE Zone 2		2	UEPDC		184.93										
	4W DS1 Digital Loop/4W DDITS Trunk Port - UNE Zone 3		3	UEPDC		222.73										
	UNE Loop Rates															
	4-Wire DS1 Digital Loop - UNE Zone 1		1	UEPDC	USLDC	55.53							19.99	19.99		
	4-Wire DS1 Digital Loop - UNE Zone 2		2	UEPDC	USLDC	64.13							19.99	19.99		
	4-Wire DS1 Digital Loop - UNE Zone 3		3	UEPDC	USLDC	101.93							19.99	19.99		
	UNE Port Rate															
	4-Wire DDITS Digital Trunk Port			UEPDC	UDD1T	120.80	519.42	320.64					19.99	19.99		
	NONRECURRING CHARGES - CURRENTLY COMBINED															
	4-Wire DS1 Digital Loop / 4-Wire DDITS Trunk Port Combination - Switch-as-is			UEPDC	USAC4		269.96	269.96					19.99	19.99		
	4-Wire DS1 Digital Loop / 4-Wire DDITS Trunk Port Combination - Conversion with DS1 Changes			UEPDC	USAWA		269.96	269.96					19.99	19.99		

UNBUNDLED NETWORK ELEMENTS - Georgia													Attachment: 2		Exhibit: B	
CATEGORY	RATE ELEMENTS	Interim	Zone	BCS	USOC	RATES ($)					Svc Order Submitted Elec per LSR	Svc Order Submitted Manually per LSR	Incremental Charge - Manual Svc Order vs. Electronic-1st	Incremental Charge - Manual Svc Order vs. Electronic-Add'l	Incremental Charge - Manual Svc Order vs. Electronic-Disc 1st	Incremental Charge - Manual Svc Order vs. Electronic-Disc Add'l
						Rec	Nonrecurring		Nonrecurring Disconnect		OSS Rates($)					
							First	Add'l	First	Add'l	SOMEC	SOMAN	SOMAN	SOMAN	SOMAN	SOMAN
	4-Wire DS1 Digital Loop / 4-Wire DDITS Trunk Port Combination - Conversion with Change - Trunk			UEPDC	USAWB		269.96	269.96					19.99	19.99		
ADDITIONAL NRCs																
	4-Wire DS1 Loop / 4-Wire DDITS Trunk Port - Subsequent Service Activity Per Service Order			UEPDC	USAS4		147.47	147.47								
	4-Wire DS1 Loop / 4-Wire DDITS Trunk Port - NRC - Subsequent Channel Activation/Chan - 2-Way Trunk			UEPDC	UDTTA		28.71	28.71					19.99	19.99		
	4-Wire DS1 Loop / 4-Wire DDITS Trunk Port - Subsequent Channel Activation/Chan - 1-Way Outward Trunk			UEPDC	UDTTB		28.71	28.71					19.99	19.99		
	4-Wire DS1 Loop / 4-Wire DDITS Trunk Port - Subsqnt Channel Activation/Chan Inward Trunk w/out DID			UEPDC	UDTTC		28.71	28.71					19.99	19.99		
	4-Wire DS1 Loop / 4-Wire DDITS Trunk Port - Subsqnt Chan Activation Per Chan - Inward Trunk with DID			UEPDC	UDTTD		28.71	28.71					19.99	19.99		
	4-Wire DS1 Loop / 4-Wire DDITS Trunk Port - Subsqnt Chan Activation / Chan - 2-Way DID w User Trans			UEPDC	UDTTE		28.71	28.71					19.99	19.99		
BIPOLAR 8 ZERO SUBSTITUTION																
	B8ZS -Superframe Format			UEPDC	CCOSF		0.00	600.00								
	B8ZS - Extended Superframe Format			UEPDC	CCOEF		0.00	600.00								
Alternate Mark Inversion																
	AMI -Superframe Format			UEPDC	MCOSF		0.00	0.00								
	AMI - Extended SuperFrame Format			UEPDC	MCOPO		0.00	0.00								
Telephone Number/Trunk Group Establisment Charges																
	Telephone Number for 2-Way Trunk Group			UEPDC	UDTGX	0.00										
	Telephone Number for 1-Way Outward Trunk Group			UEPDC	UDTGY	0.00										
	Telephone Number for 1-Way Inward Trunk Group Without DID			UEPDC	UDTGZ	0.00										
	DID Numbers, Establish Trunk Group and Provide First Group of 20 DID Numbers			UEPDC	NDZ	0.00	0.00	0.00								
	DID Numbers for each Group of 20 DID Numbers			UEPDC	ND4	0.00										
	DID Numbers, Non- consecutive DID Numbers , Per Number			UEPDC	ND5	0.00										
	Reserve Non-Consecutive DID Nos.			UEPDC	ND6	0.00	0.00	0.00								
	Reserve DID Numbers			UEPDC	NDV	0.00	0.00	0.00								
Dedicated DS1 (Interoffice Channel Mileage) - FX/FCO for 4-Wire DS1 Digital Loop with 4-Wire DDITS Trunk Port																
	Interoffice Channel Mileage - Fixed rate 0-8 miles (Facilities Termination)			UEPDC	1LNO1	78.47	147.07	111.75					19.99	19.99		
	Interoffice Channel Mileage - Additional rate per mile - 0-8 miles			UEPDC	1LNOA	0.4523	0.00	0.00								
	Interoffice Channel Mileage - Fixed rate 9-25 miles (Facilities Termination)			UEPDC	1LNO2	0.00	0.00	0.00								
	Interoffice Channel Mileage - Additional rate per mile - 9-25 miles			UEPDC	1LNOB	0.4523	0.00	0.00								
	Interoffice Channel Mileage - Fixed rate 25+ miles (Facilities Termination)			UEPDC	1LNO3	0.00	0.00	0.00								
	Interoffice Channel Mileage - Additional rate per mile - 25+ miles			UEPDC	1LNOC	0.4523	0.00	0.00								
	Local Number Portability, per DS0 Activated			UEPDC	LNPCP	3.15										
	Central Office Termininating Point			UEPDC	CTG	0.00										
4-WIRE DS1 LOOP WITH CHANNELIZATION WITH PORT																
System is 1 DS1 Loop, 1 D4 Channel Bank, and up to 24 Feature Activations																
Each System can have up to 24 combinations of rates depending on type and number of ports used																
UNE DS1 Loop																
	4-Wire DS1 Loop - UNE Zone 1		1	UEPMG	USLDC	55.53	0.00	0.00								
	4-Wire DS1 Loop - UNE Zone 2		2	UEPMG	USLDC	64.13	0.00	0.00								
	4-Wire DS1 Loop - UNE Zone 3		3	UEPMG	USLDC	101.93	0.00	0.00								
UNE DSO Channelization Capacities (D4 Channel Bank Configurations)																
	24 DSO Channel Capacity - 1 per DS1			UEPMG	VUM24	102.64	0.00	0.00					19.99	19.99		
	48 DSO Channel Capacity - 1 per 2 DS1s			UEPMG	VUM48	205.28	0.00	0.00					19.99	19.99		
	96 DSO Channel Capacity -1per 4 DS1s			UEPMG	VUM96	410.56	0.00	0.00					19.99	19.99		
	144 DS0 Channel Capacity - 1 per 6 DS1s			UEPMG	VUM14	615.84	0.00	0.00					19.99	19.99		
	192 DS0 Channel Capacity -1 per 8 DS1s			UEPMG	VUM19	821.12	0.00	0.00					19.99	19.99		

UNBUNDLED NETWORK ELEMENTS - Georgia													Attachment: 2		Exhibit: B	
CATEGORY	RATE ELEMENTS	Interim	Zone	BCS	USOC	RATES ($)					Svc Order Submitted Elec per LSR	Svc Order Submitted Manually per LSR	Incremental Charge - Manual Svc Order vs. Electronic-1st	Incremental Charge - Manual Svc Order vs. Electronic-Add'l	Incremental Charge - Manual Svc Order vs. Electronic-Disc 1st	Incremental Charge - Manual Svc Order vs. Electronic-Disc Add'l
						Rec	Nonrecurring		Nonrecurring Disconnect		OSS Rates($)					
							First	Add'l	First	Add'l	SOMEC	SOMAN	SOMAN	SOMAN	SOMAN	SOMAN
	240 DS0 Channel Capacity - 1 per 10 DS1s			UEPMG	VUM2O	1,026.40	0.00	0.00					19.99	19.99		
	288 DS0 Channel Capacity - 1 per 12 DS1s			UEPMG	VUM28	1,231.68	0.00	0.00					19.99	19.99		
	384 DS0 Channel Capacity - 1 per 16 DS1s			UEPMG	VUM38	1,642.24	0.00	0.00					19.99	19.99		
	480 DS0 Channel Capacity - 1 per 20 DS1s			UEPMG	VUM4O	2,052.80	0.00	0.00					19.99	19.99		
	576 DS0 Channel Capacity -1 per 24 DS1s			UEPMG	VUM57	2,463.36	0.00	0.00					19.99	19.99		
	672 DS0 Channel Capacity - 1 per 28 DS1s			UEPMG	VUM67	2,873.92	0.00	0.00					19.99	19.99		
	Non-Recurring Charges (NRC) Associated with 4-Wire DS1 Loop with Channeliztion with Port - Conversion Charge Based on a System															
	A Minimum System configuration is One (1) DS1, One (1) D4 Channel Bank, and Up To 24 DSO Ports with Feature Activations.															
	Multiples of this configuration functioning as one are considered Add'l after the minimum system configuration is counted.															
	NRC - Conversion (Currently Combined) with or without BellSouth Allowed Changes			UEPMG	USAC4	0.00	328.35	16.52					19.99	19.99		
	System Additions at End User Locations Where 4-Wire DS1 Loop with Channelization with Port Combination Currently Exists and															
	New (Not Currently Combined) in all states, except in Density Zone 1 of Top 8 MSA's															
	1 DS1/D4 Channel Bank - Additionally Add NRC for each Port and Assoc Fea Activation			UEPMG	VUMD4	0.00	738.61	462.53	144.05	17.09			19.99	19.99		
	Bipolar 8 Zero Substitution															
	Clear Channel Capability Format, superframe - Subsequent Activity Only			UEPMG	CCOSF	0.00	0.00	600.00								
	Clear Channel Capability Format - Extended Superframe - Subsequent Activity Only			UEPMG	CCOEF	0.00	0.00	600.00								
	Alternate Mark Inversion (AMI)															
	Superframe Format			UEPMG	MCOSF	0.00	0.00	0.00								
	Extended Superframe Format			UEPMG	MCOPO	0.00	0.00	0.00								
	Exchange Ports Associated with 4-Wire DS1 Loop with Channelization with Port															
	Exchange Ports															
	Line Side Combination Channelized PBX Trunk Port - Business			UEPPX	UEPCX	1.79	0.00	0.00	0.00	0.00			33.67	7.88		
	Line Side Outward Channelized PBX Trunk Port - Business			UEPPX	UEPOX	1.79	0.00	0.00	0.00	0.00			33.67	7.88		
	Line Side Inward Only Channelized PBX Trunk Port without DID			UEPPX	UEP1X	1.79	0.00	0.00	0.00	0.00			33.67	7.88		
	2-Wire Trunk Side Unbundled Channelized DID Trunk Port			UEPPX	UEPDM	11.35	0.00	0.00	0.00	0.00			33.67	7.88		
	Feature Activations - Unbundled Loop Concentration															
	Feature (Service) Activation for each Line Port Terminated in D4 Bank			UEPPX	1PQWM	0.62	25.09	13.25	3.99	3.97			33.67	7.88		
	Feature (Service) Activation for each Trunk Port Terminated in D4 Bank			UEPPX	1PQWU	0.62	77.21	18.20	56.49	11.04			33.67	7.88		
	Telephone Number/ Group Establishment Charges for DID Service															
	DID Trunk Termination (1 per Port)			UEPPX	NDT	0.00	0.00	0.00								
	Estab Trk Grp and Provide 1st 20 DID Nos. (FL,GA, NC,& SC)			UEPPX	NDZ	0.00	0.00	0.00								
	DID Numbers - groups of 20 - Valid all States			UEPPX	ND4	0.00	0.00	0.00								
	Non-Consecutive DID Numbers - per number			UEPPX	ND5	0.00	0.00	0.00								
	Reserve Non-Consecutive DID Numbers			UEPPX	ND6	0.00	0.00	0.00								
	Reserve DID Numbers			UEPPX	NDV	0.00	0.00	0.00								
	Local Number Portability															
	Local Number Portability - 1 per port			UEPPX	LNPCP	3.15	0.00	0.00								
	FEATURES - Vertical and Optional															
	Local Switching Features Offered with Line Side Ports Only															
	All Features Available			UEPPX	UEPVF	0.00	0.00	0.00								
UNBUNDLED PORT LOOP COMBINATIONS - MARKET RATES																
	Market Rates shall apply where BellSouth is not required to provide unbundled local switching or switch ports per FCC and/or State Commission rules.															
	This includes:															
	Unbundled port/loop combinations that are Currently Combined or Not Currently Combined in Zone 1 of the Top 8 MSAS in BellSouth's region for end users with 4 or more DS0 equivalent lines.															
	The Top 8 MSAs in BellSouth's region are: FL (Orlando, Ft. Lauderdale, Miami); GA (Atlanta); LA (New Orleans); NC (Greensboro-Winston Salem-Highpoint/Charlotte-Gastonia-Rock Hill); TN (Nashville).															
	BellSouth currently is developing the billing capability to mechanically bill the recurring and non-recurring Market Rates in this section except for nonrecurring charges for not currently combined in FL and NC. In the interim where BellSouth cannot bill Market Rates, BellSouth shall bill the rates in the Cost-Based section preceding in lieu of the Market Rates and reserves the right to true-up the billing difference.															
	The Market Rate for unbundled ports includes all available features in all states.															
	End Office and Tandem Switching Usage and Common Transport Usage rates in the Port section of this rate exhibit shall apply to all combinations of loop/port network elements except for UNE Coin Port/Loop Combinations which have a flat rate usage charge (USOC: URECU).															

UNBUNDLED NETWORK ELEMENTS - Georgia													Attachment: 2		Exhibit: B	
CATEGORY	RATE ELEMENTS	Interim	Zone	BCS	USOC	RATES ($)					Svc Order Submitted Elec per LSR	Svc Order Submitted Manually per LSR	Incremental Charge - Manual Svc Order vs. Electronic-1st	Incremental Charge - Manual Svc Order vs. Electronic-Add'l	Incremental Charge - Manual Svc Order vs. Electronic-Disc 1st	Incremental Charge - Manual Svc Order vs. Electronic-Disc Add'l
						Rec	Nonrecurring		Nonrecurring Disconnect		OSS Rates($)					
							First	Add'l	First	Add'l	SOMEC	SOMAN	SOMAN	SOMAN	SOMAN	SOMAN
For Not Currently Combined scenarios the Nonrecurring charges are listed in the First and Additional NRC columns for each Port USOC. For Currently Combined scenarios, the Nonrecurring charges are listed in the NRC - Currently Combined section. Additional NRCs may apply also and are categorized accordingly.																
2-WIRE VOICE GRADE LOOP WITH 2-WIRE LINE PORT (RES)																
UNE Port/Loop Combination Rates																
	2-Wire VG Loop/Port Combo - Zone 1		1			24.80										
	2-Wire VG Loop/Port Combo - Zone 2		2			26.47										
	2-Wire VG Loop/Port Combo - Zone 3		3			33.83										
UNE Loop Rates																
	2-Wire Voice Grade Loop (SL1) - Zone 1		1	UEPRX	UEPLX	10.80										
	2-Wire Voice Grade Loop (SL1) - Zone 2		2	UEPRX	UEPLX	12.47										
	2-Wire Voice Grade Loop (SL1) - Zone 3		3	UEPRX	UEPLX	19.83										
2-Wire Voice Grade Line Port (Res)																
	2-Wire voice unbundled port - residence			UEPRX	UEPRL	14.00	90.00	90.00					33.67	7.88	11.17	3.91
	2-Wire voice unbundled port with Caller ID - res			UEPRX	UEPRC	14.00	90.00	90.00					33.67	7.88	11.17	3.91
	2-Wire voice unbundled port outgoing only - res			UEPRX	UEPRO	14.00	90.00	90.00					33.67	7.88	11.17	3.91
	2-Wire voice unbundles res, low usage line port with Caller ID (LUM)			UEPRX	UEPAP	14.00	90.00	90.00					33.67	7.88	11.17	3.91
	2-Wire voice unbundled Georgia basic dialing port without Caller ID capability - res			UEPRX	UEPWC	14.00	90.00	90.00					33.67	7.88	11.17	3.91
	2-Wire voice unbundled Georgia basic dialing port for use with Caller ID - res			UEPRX	UEPWQ	14.00	90.00	90.00					33.67	7.88	11.17	3.91
	2-Wire voice unbundled Georgia basic dialing port - outgoing only			UEPRX	UEPWR	14.00	90.00	90.00					33.67	7.88	11.17	3.91
	2-Wire voice unbundled Low Usage Line Port without Caller ID Capability			UEPRX	UEPRT	14.00	90.00	90.00					33.67	7.88	11.17	3.91
LOCAL NUMBER PORTABILITY																
	Local Number Portability (1 per port)			UEPRX	LNPCX	0.35										
FEATURES																
	All Features Offered			UEPRX	UEPVF	0.00	0.00	0.00					33.67	7.88	11.17	3.91
NONRECURRING CHARGES - CURRENTLY COMBINED																
	2-Wire Voice Grade Loop / Line Port Combination - Switch-as-is			UEPRX	USAC2		41.50	41.50					33.67	7.88	11.17	3.91
	2-Wire Voice Grade Loop / Line Port Combination - Switch with change			UEPRX	USACC		41.50	41.50					33.67	7.88	11.17	3.91
ADDITIONAL NRCs																
	NRC - 2-Wire Voice Grade Loop/Line Port Combination - Subsequent			UEPRX	USAS2	0.00	0.00	0.00					33.67	7.88	11.17	3.91
2-WIRE VOICE GRADE LOOP WITH 2-WIRE LINE PORT (BUS)																
UNE Port/Loop Combination Rates																
	2-Wire VG Loop/Port Combo - Zone 1		1			24.80										
	2-Wire VG Loop/Port Combo - Zone 2		2			26.47										
	2-Wire VG Loop/Port Combo - Zone 3		3			33.83										
UNE Loop Rates																
	2-Wire Voice Grade Loop (SL1) - Zone 1		1	UEPBX	UEPLX	10.80										
	2-Wire Voice Grade Loop (SL1) - Zone 2		2	UEPBX	UEPLX	12.47										
	2-Wire Voice Grade Loop (SL1) - Zone 3		3	UEPBX	UEPLX	19.83										
2-Wire Voice Grade Line Port (Bus)																
	2-Wire voice unbundled port without Caller ID - bus			UEPBX	UEPBL	14.00	90.00	90.00					33.67	7.88	11.17	3.91
	2-Wire voice unbundled port with Caller + E484 ID - bus			UEPBX	UEPBC	14.00	90.00	90.00					33.67	7.88	11.17	3.91
	2-Wire voice unbundled port outgoing only - bus			UEPBX	UEPBO	14.00	90.00	90.00					33.67	7.88	11.17	3.91
	2-Wire voice unbundled Georgia basic dialing port, without Caller ID capability - bus			UEPBX	UEPWD	14.00	90.00	90.00					33.67	7.88	11.17	3.91
	2-Wire voice unbundled Incoming Only Port without Caller ID Capability			UEPBX	UEPBE	14.00	90.00	90.00					33.67	7.88	11.17	3.91
	2-Wire voice unbundled Georgia basic dialing port for use with Caller ID - bus			UEPBX	UEPWP	14.00	90.00	90.00					33.67	7.88	11.17	3.91
LOCAL NUMBER PORTABILITY																
	Local Number Portability (1 per port)			UEPBX	LNPCX	0.35										
FEATURES																

UNBUNDLED NETWORK ELEMENTS - Georgia													Attachment: 2		Exhibit: B	
CATEGORY	RATE ELEMENTS	Interim	Zone	BCS	USOC	RATES ($)					Svc Order Submitted Elec per LSR	Svc Order Submitted Manually per LSR	Incremental Charge - Manual Svc Order vs. Electronic-1st	Incremental Charge - Manual Svc Order vs. Electronic-Add'l	Incremental Charge - Manual Svc Order vs. Electronic-Disc 1st	Incremental Charge - Manual Svc Order vs. Electronic-Disc Add'l
						Rec	Nonrecurring		Nonrecurring Disconnect		OSS Rates($)					
							First	Add'l	First	Add'l	SOMEC	SOMAN	SOMAN	SOMAN	SOMAN	SOMAN
	All Features Offered			UEPBX	UEPVF	0.00	0.00	0.00					33.67	7.88	11.17	3.91
NONRECURRING CHARGES - CURRENTLY COMBINED																
	2-Wire Voice Grade Loop / Line Port Combination - Switch-as-is			UEPBX	USAC2		41.50	41.50					33.67	7.88	11.17	3.91
	2-Wire Voice Grade Loop / Line Port Combination - Switch with change			UEPBX	USACC		41.50	41.50					33.67	7.88	11.17	3.91
ADDITIONAL NRCs																
	NRC - 2-Wire Voice Grade Loop/Line Port Combination - Subsequent			UEPBX	USAS2		0.00	0.00					33.67	7.88	11.17	3.91
2-WIRE VOICE GRADE LOOP WITH 2-WIRE LINE PORT (RES - PBX)																
UNE Port/Loop Combination Rates																
	2-Wire VG Loop/Port Combo - Zone 1		1			24.80										
	2-Wire VG Loop/Port Combo - Zone 2		2			26.47										
	2-Wire VG Loop/Port Combo - Zone 3		3			33.83										
UNE Loop Rates																
	2-Wire Voice Grade Loop (SL1) - Zone 1		1	UEPRG	UEPLX	10.80										
	2-Wire Voice Grade Loop (SL1) - Zone 2		2	UEPRG	UEPLX	12.47										
	2-Wire Voice Grade Loop (SL1) - Zone 3		3	UEPRG	UEPLX	19.83										
2-Wire Voice Grade Line Port Rates (RES - PBX)																
	2-Wire VG Unbundled Combination 2-Way PBX Trunk Port - Res			UEPRG	UEPRD	14.00	90.00	90.00					33.67	7.88	11.17	3.91
	2-Wire voice unbundled Georgia extended dialing port, PBX 1-Way Outdial Trunk			UEPRG	UEPPO	14.00	90.00	90.00					33.67	7.88	11.17	3.91
	2-Wire voice unbundled Low Usage Line Port without Caller ID Capability			UEPRX	UEPRT	14.00	90.00	90.00					33.67	7.88	11.17	3.91
LOCAL NUMBER PORTABILITY																
	Local Number Portability (1 per port)			UEPRG	LNPCP	3.15	0.00	0.00								
FEATURES																
	All Features Offered			UEPRG	UEPVF	0.00	0.00	0.00					33.67	7.88	11.17	3.91
NONRECURRING CHARGES - CURRENTLY COMBINED																
	2-Wire Voice Grade Loop/ Line Port Combination - Switch-As-Is			UEPRG	USAC2		41.50	41.50					33.67	7.88	11.17	3.91
	2-Wire Voice Grade Loop/ Line Port Combination - Switch with Change			UEPRG	USACC		41.50	41.50					33.67	7.88	11.17	3.91
ADDITIONAL NRCs																
	2 Wire Loop/Line Side Port Combination - Non feature - Subsequent Activity- Nonrecurring						0.00	0.00					33.67	7.88	11.17	3.91
	PBX Subsequent Activity - Change/Rearrange Multiline Hunt Group						14.64	14.64					19.99	19.99	19.99	19.99
2-WIRE VOICE GRADE LOOP WITH 2-WIRE LINE PORT (BUS - PBX)																
UNE Port/Loop Combination Rates																
	2-Wire VG Loop/Port Combo - Zone 1		1			24.80										
	2-Wire VG Loop/Port Combo - Zone 2		2			26.47										
	2-Wire VG Loop/Port Combo - Zone 3		3			33.83										
UNE Loop Rates																
	2-Wire Voice Grade Loop (SL1) - Zone 1		1	UEPPX	UEPLX	10.80										
	2-Wire Voice Grade Loop (SL1) - Zone 2		2	UEPPX	UEPLX	12.47										
	2-Wire Voice Grade Loop (SL1) - Zone 3		3	UEPPX	UEPLX	19.83										
2-Wire Voice Grade Line Port Rates (BUS - PBX)																
	Line Side Unbundled Combination 2-Way PBX Trunk Port - Bus			UEPPX	UEPPC	14.00	90.00	90.00					33.67	7.88	11.17	3.91
	Line Side Unbundled Outward PBX Trunk Port - Bus			UEPPX	UEPPO	14.00	90.00	90.00					33.67	7.88	11.17	3.91
	Line Side Unbundled Incoming PBX Trunk Port - Bus			UEPPX	UEPP1	14.00	90.00	90.00					33.67	7.88	11.17	3.91
	2-Wire Voice Unbundled PBX LD Terminal Ports			UEPPX	UEPLD	14.00	90.00	90.00					33.67	7.88	11.17	3.91
	2-Wire Voice Unbundled 2-Way Combination PBX Usage Port			UEPPX	UEPXA	14.00	90.00	90.00					33.67	7.88	11.17	3.91
	2-Wire Voice Unbundled PBX Toll Terminal Hotel Ports			UEPPX	UEPXB	14.00	90.00	90.00					33.67	7.88	11.17	3.91
	2-Wire Voice Unbundled PBX LD DDD Terminals Port			UEPPX	UEPXC	14.00	90.00	90.00					33.67	7.88	11.17	3.91
	2-Wire Voice Unbundled PBX LD Terminal Switchboard Port			UEPPX	UEPXD	14.00	90.00	90.00					33.67	7.88	11.17	3.91

UNBUNDLED NETWORK ELEMENTS - Georgia														Attachment: 2		Exhibit: B	
CATEGORY		RATE ELEMENTS	Interim	Zone	BCS	USOC	RATES ($)					Svc Order Submitted Elec per LSR	Svc Order Submitted Manually per LSR	Incremental Charge - Manual Svc Order vs. Electronic-1st	Incremental Charge - Manual Svc Order vs. Electronic-Add'l	Incremental Charge - Manual Svc Order vs. Electronic-Disc 1st	Incremental Charge - Manual Svc Order vs. Electronic-Disc Add'l
							Rec	Nonrecurring		Nonrecurring Disconnect		OSS Rates($)					
								First	Add'l	First	Add'l	SOMEC	SOMAN	SOMAN	SOMAN	SOMAN	SOMAN
		2-Wire Voice Unbundled PBX LD Terminal Switchboard IDD Capable Port			UEPPX	UEPXE	14.00	90.00	90.00					33.67	7.88	11.17	3.91
		2-Wire Voice Unbundled 2-Way PBX Hotel/Hospital Economy Administrative Calling Port			UEPPX	UEPXL	14.00	90.00	90.00					33.67	7.88	11.17	3.91
		2-Wire Voice Unbundled 2-Way PBX Hotel/Hospital Economy Room Calling Port			UEPPX	UEPXM	14.00	90.00	90.00					33.67	7.88	11.17	3.91
		2-Wire Voice Unbundled 1-Way Outgoing PBX Hotel/Hospital Discount Room Calling Port			UEPPX	UEPXO	14.00	90.00	90.00					33.67	7.88	11.17	3.91
		2-Wire Voice Unbundled 1-Way Outgoing PBX Measured Port			UEPPX	UEPXS	14.00	90.00	90.00					33.67	7.88	11.17	3.91
		2-Wire voice unbundled Georgia basic dialing port - 1-Way Oudial Trunk			UEPPX	UEPWS	14.00	90.00	90.00					33.67	7.88	11.17	3.91
		2-Wire voice unbundled Georgia basic dialing port - 2-Way Trunk			UEPPX	UEPWT	14.00	90.00	90.00					33.67	7.88	11.17	3.91
		2-Wire voice unbundled Georgia basic dialing port - 2-way PBX Trunk			UEPPX	UEPPQ	14.00	90.00	90.00					33.67	7.88	11.17	3.91
		2-Wire voice unbundled Georgia basic dialing port - PBX LD Terminal Ports			UEPPX	UEPPS	14.00	90.00	90.00					33.67	7.88	11.17	3.91
		2-Wire voice unbundled Georgia basic dialing port - PBX Toll Terminal Ports			UEPPX	UEPPT	14.00	90.00	90.00					33.67	7.88	11.17	3.91
		2-Wire voice unbundled Georgia basic dialing port - PBX LD DDD Terminal Port			UEPPX	UEPPU	14.00	90.00	90.00					33.67	7.88	11.17	3.91
		2-Wire voice unbundled Georgia basic dialing port - PBX LD Terminal Switchboard Port			UEPPX	UEPPV	14.00	90.00	90.00					33.67	7.88	11.17	3.91
		2-Wire voice unbundled Georgia basic dialing port - PBX LD Terminal Switchboard DDD Capable Port			UEPPX	UEPPW	14.00	90.00	90.00					33.67	7.88	11.17	3.91
	LOCAL NUMBER PORTABILITY																
		Local Number Portability (1 per port)			UEPPX	LNPCP	3.15	0.00	0.00								
	FEATURES																
		All Features Offered			UEPPX	UEPVF	0.00	0.00	0.00					33.67	7.88	11.17	3.91
	NONRECURRING CHARGES - CURRENTLY COMBINED																
		2-Wire Voice Grade Loop/ Line Port Combination - Switch-As-Is			UEPPX	USAC2		41.50	41.50					33.67	7.88	11.17	3.91
		2-Wire Voice Grade Loop/ Line Port Combination - Switch with Change			UEPPX	USACC		41.50	41.50					33.67	7.88	11.17	3.91
	ADDITIONAL NRCs																
		2-Wire Voice Grade Loop/ Line Port Combination - Subsequent			UEPPX	USAS2	0.00	0.00	0.00					33.67	7.88	11.17	3.91
		2 Wire Loop/Line Side Port Combination - Non feature - Subsequent Activity- Nonrecurring						0.00	0.00					33.67	7.88	11.17	3.91
		PBX Subsequent Activity - Change/Rearrange Multiline Hunt Group						14.64	14.64					19.99	19.99	19.99	19.99
	2-WIRE VOICE GRADE LOOP WITH 2-WIRE ANALOG LINE COIN PORT																
	UNE Port/Loop Combination Rates																
		2-Wire VG Coin Port/Loop Combo – Zone 1		1			24.80										
		2-Wire VG Coin Port/Loop Combo – Zone 2		2			26.47										
		2-Wire VG Coin Port/Loop Combo – Zone 3		3			33.83										
	UNE Loop Rates																
		2-Wire Voice Grade Loop (SL1) - Zone 1		1	UEPCO	UEPLX	10.80										
		2-Wire Voice Grade Loop (SL1) - Zone 2		2	UEPCO	UEPLX	12.47										
		2-Wire Voice Grade Loop (SL1) - Zone 3		3	UEPCO	UEPLX	19.83										
	2-Wire Voice Grade Line Port Rates (Coin)																
		2-Wire Coin 2-Way with Operator Screening (GA)			UEPCO	UEPGC	14.00	90.00	90.00					33.67	7.88	11.17	3.91
		2-Wire Coin 2-Way with Operator Screening and Blocking: 011, 900/976, 1+DDD (GA)			UEPCO	UEP2G	14.00	90.00	90.00					33.67	7.88	11.17	3.91
		2-Wire Coin 2-Way with Operator Screening and 011 Blocking (GA)			UEPCO	UEPGA	14.00	90.00	90.00					33.67	7.88	11.17	3.91
		2-Wire Coin 2-Way with Operator Screening and 900/976 Blocking (GA)			UEPCO	UEPGB	14.00	90.00	90.00					33.67	7.88	11.17	3.91

CATEGORY	RATE ELEMENTS	Interim	Zone	BCS	USOC	RATES ($)					Svc Order Submitted Elec per LSR	Svc Order Submitted Manually per LSR	Attachment: 2 Incremental Charge - Manual Svc Order vs. Electronic-1st	Attachment: 2 Incremental Charge - Manual Svc Order vs. Electronic-Add'l	Exhibit: B Incremental Charge - Manual Svc Order vs. Electronic-Disc 1st	Exhibit: B Incremental Charge - Manual Svc Order vs. Electronic-Disc Add'l
						Rec	Nonrecurring		Nonrecurring Disconnect		OSS Rates($)					
							First	Add'l	First	Add'l	SOMEC	SOMAN	SOMAN	SOMAN	SOMAN	SOMAN
	2-Wire Coin 2-Way with Operator Screening and Blocking: 900/976, 1+DDD, 011+,and Local (GA)			UEPCO	UEPCH	14.00	90.00	90.00					33.67	7.88	11.17	3.91
	2-Wire Coin Outward with Operator Screening and 011Blocking (GA, KY, MS)			UEPCO	UEPRJ	14.00	90.00	90.00					33.67	7.88	11.17	3.91
	2-Wire Coin Outward with Operator Screening and Blocking: 900/976, 1+DDD, 011+, and Local (FL, GA)			UEPCO	UEPCQ	14.00	90.00	90.00					33.67	7.88	11.17	3.91
	LOCAL NUMBER PORTABILITY															
	Local Number Portability (1 per port)			UEPCO	LNPCX	0.35										
	NONRECURRING CHARGES - CURRENTLY COMBINED															
	2-Wire Voice Grade Loop/ Line Port Combination - Switch-As-Is			UEPCO	USAC2		41.50	41.50					33.67	7.88	11.17	3.91
	2-Wire Voice Grade Loop/ Line Port Combination - Switch with Change			UEPCO	USACC		41.50	41.50					33.67	7.88	11.17	3.91
	ADDITIONAL NRCs															
	2-Wire Voice Grade Loop/ Line Port Combination - Subsequent			UEPCO	USAS2		0.00	0.00					33.67	7.88	11.17	3.91
	2-WIRE VOICE LOOP/ 2WIRE VOICE GRADE IO TRANSPORT/ 2-WIRE LINE PORT (RES)															
	UNE Port/Loop Combination Rates															
	2-Wire VG Loop/IO Tranport/Port Combo - Zone 1		1			30.84										
	2-Wire VG Loop/IO Tranport/Port Combo - Zone 2		2			33.45										
	2-Wire VG Loop/IO Tranport/Port Combo - Zone 3		3			44.92										
	UNE Loop Rates															
	2-Wire Voice Grade Loop (SL2) - Zone 1		1	UEPFR	UECF2	16.84										
	2-Wire Voice Grade Loop (SL2) - Zone 2		2	UEPFR	UECF2	19.45										
	2-Wire Voice Grade Loop (SL2) - Zone 3		3	UEPFR	UECF2	30.92										
	2-Wire Voice Grade Line Port Rates (Res)															
	2-Wire voice unbundled port - residence			UEPFR	UEPRL	14.00	160.00	125.00					33.67	7.88	11.17	3.91
	2-Wire voice unbundled port with Caller ID - res			UEPFR	UEPRC	14.00	160.00	125.00					37.06	7.88	11.17	3.91
	2-Wire voice unbundled port outgoing only - res			UEPFR	UEPRO	14.00	160.00	125.00					33.67	7.88	11.17	3.91
	2-Wire voice unbundles res, low usage line port with Caller ID (LUM)			UEPFR	UEPAP	14.00	160.00	125.00					33.67	7.88	11.17	3.91
	2-Wire voice unbundled Georgia basic dialing port, without Caller ID capability - res			UEPFR	UEPWC	14.00	160.00	125.00					33.67	7.88	11.17	3.91
	2-Wire voice unbundled Georgia basic dialing port for use with Caller ID - res			UEPFR	UEPWQ	14.00	160.00	125.00					33.67	7.88	11.17	3.91
	2-Wire voice unbundled Georgia basic dialing port - outgoing only			UEPFR	UEPWR	14.00	160.00	125.00					33.67	7.88	11.17	3.91
	INTEROFFICE TRANSPORT															
	Interoffice Transport - Dedicated - 2 Wire Voice Grade - Facility Termination			UEPFR	U1TV2	17.07	79.61	36.08								
	Interoffice Transport - Dedicated - 2 Wire Voice Grade - Per Mile or Fraction Mile			UEPFR	1L5XX	0.0222										
	FEATURES															
	All Features Offered			UEPFR	UEPVF	0.00	0.00	0.00					33.67	7.88	11.17	3.91
	LOCAL NUMBER PORTABILITY															
	Local Number Portability (1 per port)			UEPFR	LNPCX	0.35										
	NONRECURRING CHARGES (NRCs) - CURRENTLY COMBINED															
	2-Wire Loop / Dedicated IO Transport / 2 Wire Line Port Combination - Conversion - Switch-as-is			UEPFR	USAC2		93.83	93.83					33.67	7.88	11.17	3.91
	2-Wire Loop / Dedicated IO Transport / 2 Wire Line Port Combination - Conversion - Switch-With-Change			UEPFR	USACC		93.83	93.83					33.67	7.88		
	2-WIRE VOICE LOOP/ 2WIRE VOICE GRADE IO TRANSPORT/ 2-WIRE LINE PORT (BUS)															
	UNE Port/Loop Combination Rates															
	2-Wire VG Loop/IO Tranport/Port Combo - Zone 1		1			30.84										
	2-Wire VG Loop/IO Tranport/Port Combo - Zone 2		2			33.45										
	2-Wire VG Loop/IO Tranport/Port Combo - Zone 3		3			44.92										
	UNE Loop Rates															
	2-Wire Voice Grade Loop (SL2) - Zone 1		1	UEPFB	UECF2	16.84										
	2-Wire Voice Grade Loop (SL2) - Zone 2		2	UEPFB	UECF2	19.45										

UNBUNDLED NETWORK ELEMENTS - Georgia													Attachment: 2		Exhibit: B	
CATEGORY	RATE ELEMENTS	Interim	Zone	BCS	USOC	RATES ($)					Svc Order Submitted Elec per LSR	Svc Order Submitted Manually per LSR	Incremental Charge - Manual Svc Order vs. Electronic-1st	Incremental Charge - Manual Svc Order vs. Electronic-Add'l	Incremental Charge - Manual Svc Order vs. Electronic-Disc 1st	Incremental Charge - Manual Svc Order vs. Electronic-Disc Add'l
						Rec	Nonrecurring		Nonrecurring Disconnect		OSS Rates($)					
							First	Add'l	First	Add'l	SOMEC	SOMAN	SOMAN	SOMAN	SOMAN	SOMAN
	2-Wire Voice Grade Loop (SL2) - Zone 3		3	UEPFB	UECF2	30.92										
2-Wire Voice Grade Line Port (Bus)																
	2-Wire voice unbundled port without Caller ID - bus			UEPFB	UEPBL	14.00	160.00	125.00					33.67	7.88	11.17	3.91
	2-Wire voice unbundled port with Caller + E484 ID - bus			UEPFB	UEPBC	14.00	160.00	125.00					33.67	7.88	11.17	3.91
	2-Wire voice unbundled port outgoing only - bus			UEPFB	UEPBO	14.00	160.00	125.00					33.67	7.88	11.17	3.91
	2-Wire voice unbundled incoming only port with Caller ID - Bus			UEPFB	UEPB1	14.00	160.00	125.00					33.67	7.88	11.17	3.91
	2-Wire voice unbundled Georgia basic dialing port, without Caller ID capability - bus			UEPFB	UEPWD	14.00	160.00	125.00					33.67	7.88	11.17	3.91
	2-Wire voice unbundled Georgia basic dialing port for use with Caller ID - bus			UEPFB	UEPWP	14.00	160.00	125.00					33.67	7.88	11.17	3.91
LOCAL NUMBER PORTABILITY																
	Local Number Portability (1 per port)			UEPFB	LNPCX	0.35										
INTEROFFICE TRANSPORT																
	Interoffice Transport - Dedicated - 2 Wire Voice Grade - Facility Termination			UEPFB	U1TV2	17.07	79.61	36.08								
	Interoffice Transport - Dedicated - 2 Wire Voice Grade - Per Mile or Fraction Mile			UEPFB	1L5XX	0.0222										
FEATURES																
	All Features Offered			UEPFB	UEPVF	0.00	0.00	0.00					33.67	7.88	11.17	3.91
NONRECURRING CHARGES (NRCs) - CURRENTLY COMBINED																
	2-Wire Loop / Dedicated IO Transport / 2 Wire Line Port Combination - Conversion - Switch-as-is			UEPFB	USAC2		93.83	93.83					33.67	7.88	11.17	3.91
	2-Wire Loop / Dedicated IO Transport / 2 Wire Line Port Combination - Conversion - Switch with change			UEPFB	USACC		93.83	93.83								
2-WIRE VOICE GRADE LOOP WITH 2-WIRE LINE PORT (BUS - PBX)																
UNE Port/Loop Combination Rates																
	2-Wire VG Loop/IO Tranport/Port Combo - Zone 1		1			30.84										
	2-Wire VG Loop/IO Tranport/Port Combo - Zone 2		2			33.45										
	2-Wire VG Loop/IO Tranport/Port Combo - Zone 3		3			44.92										
UNE Loop Rates																
	2-Wire Voice Grade Loop (SL2) - Zone 1		1	UEPFP	UECF2	16.84										
	2-Wire Voice Grade Loop (SL2) - Zone 2		2	UEPFP	UECF2	19.45										
	2-Wire Voice Grade Loop (SL2) - Zone 3		3	UEPFP	UECF2	30.92										
2-Wire Voice Grade Line Port Rates (BUS - PBX)																
	Line Side Unbundled Combination 2-Way PBX Trunk Port - Bus			UEPFP	UEPPC	14.00	160.00	125.00					33.67	7.88	11.17	3.91
	Line Side Unbundled Outward PBX Trunk Port - Bus			UEPFP	UEPPO	14.00	160.00	125.00					33.67	7.88	11.17	3.91
	Line Side Unbundled Incoming PBX Trunk Port - Bus			UEPFP	UEPP1	14.00	160.00	125.00					33.67	7.88	11.17	3.91
	2-Wire Voice Unbundled PBX LD Terminal Ports			UEPFP	UEPLD	14.00	160.00	125.00					33.67	7.88	11.17	3.91
	2-Wire Voice Unbundled 2-Way Combination PBX Usage Port			UEPFP	UEPXA	14.00	160.00	125.00					37.06	7.88	11.17	3.91
	2-Wire Voice Unbundled PBX Toll Terminal Hotel Ports			UEPFP	UEPXB	14.00	160.00	125.00					33.67	7.88	11.17	3.91
	2-Wire Voice Unbundled PBX LD DDD Terminals Port			UEPFP	UEPXC	14.00	160.00	125.00					33.67	7.88	11.17	3.91
	2-Wire Voice Unbundled PBX LD Terminal Switchboard Port			UEPFP	UEPXD	14.00	160.00	125.00					33.67	7.88	11.17	3.91
	2-Wire Voice Unbundled PBX LD Terminal Switchboard IDD Capable Port			UEPFP	UEPXE	14.00	160.00	125.00					33.67	7.88	11.17	3.91
	2-Wire Voice Unbundled 2-Way PBX Hotel/Hospital Economy Administrative Calling Port			UEPFP	UEPXL	14.00	160.00	125.00					33.67	7.88	11.17	3.91
	2-Wire Voice Unbundled 2-Way PBX Hotel/Hospital Economy Room Calling Port			UEPFP	UEPXM	14.00	160.00	125.00					33.67	7.88	11.17	3.91
	2-Wire Voice Unbundled 1-Way Outgoing PBX Hotel/Hospital Discount Room Calling Port			UEPFP	UEPXO	14.00	160.00	125.00					33.67	7.88	11.17	3.91
	2-Wire Voice Unbundled 1-Way Outgoing PBX Measured Port			UEPFP	UEPXS	14.00	160.00	125.00					33.67	7.88	11.17	3.91
	2-Wire voice unbundled Georgia basic dialing port - 1-Way Oudial Trunk			UEPFP	UEPWS	14.00	160.00	125.00					33.67	7.88	11.17	3.91
	2-Wire voice unbundled Georgia basic dialing port - 2-Way Trunk			UEPFP	UEPWT	14.00	160.00	125.00					33.67	7.88	11.17	3.91
LOCAL NUMBER PORTABILITY																
	Local Number Portability (1 per port)			UEPFP	LNPCP	3.15	0.00	0.00					33.67	7.88	11.17	3.91
INTEROFFICE TRANSPORT																

CATEGORY	RATE ELEMENTS	Interim	Zone	BCS	USOC	RATES ($)					Svc Order Submitted Elec per LSR	Svc Order Submitted Manually per LSR	Attachment: 2 Incremental Charge - Manual Svc Order vs. Electronic-1st	Attachment: 2 Incremental Charge - Manual Svc Order vs. Electronic-Add'l	Exhibit: B Incremental Charge - Manual Svc Order vs. Electronic-Disc 1st	Exhibit: B Incremental Charge - Manual Svc Order vs. Electronic-Disc Add'l
						Rec	Nonrecurring		Nonrecurring Disconnect		OSS Rates($)					
							First	Add'l	First	Add'l	SOMEC	SOMAN	SOMAN	SOMAN	SOMAN	SOMAN
	Interoffice Transport - Dedicated - 2 Wire Voice Grade - Facility Termination			UEPFP	U1TV2	17.07	79.61	36.08								
	Interoffice Transport - Dedicated - 2 Wire Voice Grade - Per Mile or Fraction Mile			UEPFP	1L5XX	0.0222										
FEATURES																
	All Features Offered			UEPFP	UEPVF	0.00	0.00	0.00					33.67	7.88	11.17	3.91
NONRECURRING CHARGES (NRCs) - CURRENTLY COMBINED																
	2-Wire Loop / Dedicated IO Transport / 2 Wire Line Port Combination - Conversion - Switch-as-is			UEPFP	USAC2		93.83	93.83					33.67	7.88	11.17	3.91
	2-Wire Loop / Dedicated IO Transport / 2 Wire Line Port Combination - Conversion - Switch with change			UEPFP	USACC		93.83	93.83					33.67	7.88	11.17	3.91
UNBUNDLED PORT/LOOP COMBINATIONS - MARKET BASED RATES																
2-WIRE VOICE GRADE LOOP- BUS ONLY - WITH 2-WIRE DID TRUNK PORT																
UNE Port/Loop Combination Rates																
	2-Wire VG Loop/2-Wire DID Trunk Port Combo - UNE Zone 1		1			99.84										
	2-Wire VG Loop/2-Wire DID Trunk Port Combo - UNE Zone 2		2			102.45										
	2-Wire VG Loop/2-Wire DID Trunk Port Combo - UNE Zone 3		3			113.92										
UNE Loop Rates																
	2-Wire Analog Voice Grade Loop - (SL2) - UNE Zone 1		1	UEPPX	UECD1	16.84	104.78	78.10								
	2-Wire Analog Voice Grade Loop - (SL2) - UNE Zone 2		2	UEPPX	UECD1	19.45	104.78	78.10								
	2-Wire Analog Voice Grade Loop - (SL2) - UNE Zone 3		3	UEPPX	UECD1	30.92	104.78	104.10								
UNE Port Rate																
	Exchange Ports - 2-Wire DID Port			UEPPX	UEPD1	83.00	850.00	75.00					33.67	7.88		
NONRECURRING CHARGES - CURRENTLY COMBINED																
	2-Wire Voice Grade Loop / 2-Wire DID Trunk Port Combination - Switch-As-Is Top 8 MSAs only			UEPPX	USAC1		850.00	75.00					33.67	7.88		
	2-Wire Voice Grade Loop / 2-Wire DID Trunk Port Conversion with BellSouth Allowable Changes Top 8 MSAs only			UEPPX	USA1C		850.00	75.00					33.67	7.88		
ADDITIONAL NRCs																
Telephone Number/Trunk Group Establisment Charges																
	DID Trunk Termination (One Per Port)			UEPPX	NDT	0.00	0.00	0.00								
	DID Numbers, Establish Trunk Group and Provide First Group of 20 DID Numbers			UEPPX	NDZ	0.00	0.00	0.00								
	Additional DID Numbers for each Group of 20 DID Numbers			UEPPX	ND4	0.00	0.00	0.00								
	DID Numbers, Non- consecutive DID Numbers , Per Number			UEPPX	ND5	0.00	0.00	0.00								
	Reserve Non-Consecutive DID numbers			UEPPX	ND6	0.00	0.00	0.00								
	Reserve DID Numbers			UEPPX	NDV	0.00	0.00	0.00								
LOCAL NUMBER PORTABILITY																
	Local Number Portability (1 per port)			UEPPX	LNPCP	3.15	0.00	0.00								
2-WIRE ISDN DIGITAL GRADE LOOP WITH 2-WIRE ISDN DIGITAL LINE SIDE PORT																
UNE Port/Loop Combination Rates																
	2W ISDN Digital Grade Loop/2W ISDN Digital Line Side Port - UNE Zone 1		1	UEPPB UEPPR		81.89										
	2W ISDN Digital Grade Loop/2W ISDN Digital Line Side Port - UNE Zone 2		2	UEPPB UEPPR		85.27										
	2W ISDN Digital Grade Loop/2W ISDN Digital Line Side Port - UNE Zone 3		3	UEPPB UEPPR		100.17										
UNE Loop Rate																
	2-Wire ISDN Digital Grade Loop - UNE Zone 1		1	UEPPB UEPPR	USL2X	21.89	252.32	188.77					19.99	19.99		
	2-Wire ISDN Digital Grade Loop - UNE Zone 2		2	UEPPB UEPPR	USL2X	25.27	252.32	188.77					19.99	19.99		
	2-Wire ISDN Digital Grade Loop - UNE Zone 3		3	UEPPB UEPPR	USL2X	40.17	252.32	188.77					19.99	19.99		
UNE Port Rate																
	Exchange Port - 2-Wire ISDN Line Side Port			UEPPB UEPPR	UEPPB	60.00	525.00	400.00					19.99	19.99		
NONRECURRING CHARGES - CURRENTLY COMBINED																
	2-Wire ISDN Digital Grade Loop / 2-Wire ISDN Line Side Port Combination - Conversion - Top 8 MSAs only			UEPPB UEPPR	USACB	0.00	215.00	215.00					19.99	19.99		
ADDITIONAL NRCs																

CATEGORY	RATE ELEMENTS	Interim	Zone	BCS	USOC	RATES ($) Rec	Nonrecurring First	Nonrecurring Add'l	Nonrecurring Disconnect First	Nonrecurring Disconnect Add'l	Svc Order Submitted Elec per LSR	Svc Order Submitted Manually per LSR	Attachment: 2 Incremental Charge - Manual Svc Order vs. Electronic- 1st	Attachment: 2 Incremental Charge - Manual Svc Order vs. Electronic- Add'l	Exhibit: B Incremental Charge - Manual Svc Order vs. Electronic- Disc 1st	Exhibit: B Incremental Charge - Manual Svc Order vs. Electronic- Disc Add'l
											OSS Rates($)					
											SOMEC	SOMAN	SOMAN	SOMAN	SOMAN	SOMAN
	2-Wire ISDN Loop / 2-Wire ISDN Port Combination - Sub Actvy - Non Feature/Add Trunk			UEPPB UEPPR	USASB		165.95						19.99	19.99		
	LOCAL NUMBER PORTABILITY															
	Local Number Portability (1 per port)			UEPPB UEPPR	LNPCX	0.35	0.00	0.00								
	B-CHANNEL USER PROFILE ACCESS:															
	CVS/CSD (DMS/5ESS)			UEPPB UEPPR	U1UCA	0.00	0.00	0.00								
	CVS (EWSD)			UEPPB UEPPR	U1UCB	0.00	0.00	0.00								
	CSD			UEPPB UEPPR	U1UCC	0.00	0.00	0.00								
	B-CHANNEL AREA PLUS USER PROFILE ACCESS: (AL,KY,LA,MS SC,MS, & TN)															
	USER TERMINAL PROFILE															
	User Terminal Profile (EWSD only)			UEPPB UEPPR	U1UMA	0.00	0.00	0.00								
	VERTICAL FEATURES															
	All Vertical Features - One per Channel B User Profile			UEPPB UEPPR	UEPVF	0.00	0.00	0.00					19.99	19.99		
	INTEROFFICE CHANNEL MILEAGE															
	Interoffice Channel mileage each, including first mile and facilities termination			UEPPB UEPPR	M1GNC	16.47	79.61	36.08					19.99	19.99		
	Interoffice Channel mileage each, additional mile			UEPPB UEPPR	M1GNM	0.0222	0.00	0.00								
	4-WIRE DS1 DIGITAL LOOP WITH 4-WIRE ISDN DS1 DIGITAL TRUNK PORT															
	UNE Port/Loop Combination Rates															
	4W DS1 Digital Loop/4W ISDN DS1 Digital Trunk Port - UNE Zone 1		1	UEPPP		955.53										
	4W DS1 Digital Loop/4W ISDN DS1 Digital Trunk Port - UNE Zone 2		2	UEPPP		964.13										
	4W DS1 Digital Loop/4W ISDN DS1 Digital Trunk Port - UNE Zone 3		3	UEPPP		1,001.93										
	UNE Loop Rates															
	4-Wire DS1 Digital Loop - UNE Zone 1		1	UEPPP	USL4P	55.53	448.92	276.60					19.99	19.99		
	4-Wire DS1 Digital Loop - UNE Zone 2		2	UEPPP	USL4P	64.13	448.92	276.60					19.99	19.99		
	4-Wire DS1 Digital Loop - UNE Zone 3		3	UEPPP	USL4P	101.93	448.92	276.60					19.99	19.99		
	UNE Port Rate															
	Exchange Ports - 4-Wire ISDN DS1 Port			UEPPP	UEPPP	900.00	1,200.00	1,200.00					19.99	19.99		
	NONRECURRING CHARGES - CURRENTLY COMBINED															
	4-Wire DS1 Digital Loop / 4-Wire ISDN DS1 Digital Trunk Port Combination - Conversion -Switch-As-Is Top 8 MSAs only			UEPPP	USACP	0.00	925.00	925.00					19.99	19.99		
	ADDITIONAL NRCs															
	4-Wire DS1 Loop/4-W ISDN Digtl Trk Port - Subsqt Actvy-Inward/two way Telephone Numbers (except NC)			UEPPP	PR7TF		0.9686									
	4-Wire DS1 Loop / 4-Wire ISDN DS1 Digital Trunk Port - Outward Tel Numbers (All States except NC)			UEPPP	PR7TO		22.75	22.75								
	4-Wire DS1 Loop / 4-Wire ISDN DS1 Digital Trk Port - Subsequent Inward Telephone Numbers			UEPPP	PR7ZT		45.49	45.49								
	LOCAL NUMBER PORTABILITY															
	Local Number Portability (1 per port)			UEPPP	LNPCN	1.75										
	INTERFACE (Provsioning Only)															
	Voice/Data			UEPPP	PR71V	0.00	0.00	0.00								
	Digital Data			UEPPP	PR71D	0.00	0.00	0.00								
	Inward Data			UEPPP	PR71E	0.00	0.00	0.00								
	New or Additional "B" Channel															
	New or Additional - Voice/Data B Channel			UEPPP	PR7BV	0.00	28.71						19.99	19.99		
	New or Additional - Digital Data B Channel			UEPPP	PR7BF	0.00	28.71						19.99	19.99		
	New or Additional Inward Data B Channel			UEPPP	PR7BD	0.00	28.71						19.99	19.99		
	CALL TYPES															
	Inward			UEPPP	PR7C1	0.00	0.00	0.00								
	Outward			UEPPP	PR7CO	0.00	0.00	0.00								
	Two-way			UEPPP	PR7CC	0.00	0.00	0.00								
	Interoffice Channel Mileage															
	Fixed Each Including First Mile			UEPPP	1LN1A	78.9223	147.07	111.75	0.00				19.99	19.99		
	Each Airline-Fractional Additional Mile			UEPPP	1LN1B	0.4523										
	4-WIRE DS1 DIGITAL LOOP WITH 4-WIRE DDITS TRUNK PORT															

UNBUNDLED NETWORK ELEMENTS - Georgia													Attachment: 2		Exhibit: B	
CATEGORY	RATE ELEMENTS	Interim	Zone	BCS	USOC	RATES ($)					Svc Order Submitted Elec per LSR	Svc Order Submitted Manually per LSR	Incremental Charge - Manual Svc Order vs. Electronic-1st	Incremental Charge - Manual Svc Order vs. Electronic-Add'l	Incremental Charge - Manual Svc Order vs. Electronic-Disc 1st	Incremental Charge - Manual Svc Order vs. Electronic-Disc Add'l
						Rec	Nonrecurring		Nonrecurring Disconnect		OSS Rates($)					
							First	Add'l	First	Add'l	SOMEC	SOMAN	SOMAN	SOMAN	SOMAN	SOMAN
UNE Port/Loop Combination Rates																
	4W DS1 Digital Loop/4W DDITS Trunk Port - UNE Zone 1		1	UEPDC		176.33										
	4W DS1 Digital Loop/4W DDITS Trunk Port - UNE Zone 2		2	UEPDC		184.93										
	4W DS1 Digital Loop/4W DDITS Trunk Port - UNE Zone 3		3	UEPDC		222.73										
UNE Loop Rates																
	4-Wire DS1 Digital Loop - UNE Zone 1		1	UEPDC	USLDC	55.53	448.92	276.00					19.99	19.99		
	4-Wire DS1 Digital Loop - UNE Zone 2		2	UEPDC	USLDC	64.13	448.92	276.60					19.99	19.99		
	4-Wire DS1 Digital Loop - UNE Zone 3		3	UEPDC	USLDC	101.93	448.92	276.60					19.99	19.99		
UNE Port Rate																
	4-Wire DDITS Digital Trunk Port			UEPDC	UDD1T	750.00	1,011.43	477.87	206.70	20.70			19.99	19.99		
NONRECURRING CHARGES - CURRENTLY COMBINED																
	4-Wire DS1 Digital Loop / 4-Wire DDITS Trunk Port Combination - Switch-As-Is Top 8 MSAs only			UEPDC	USAC4		269.96	269.96					19.99	19.99		
	4-Wire DS1 Digital Loop / 4-Wire DDITS Trunk Port Combination - Conversion with DS1 Changes Top 8 MSAs only			UEPDC	USAWA		269.96	269.96					19.99	19.99		
	4-Wire DS1 Digital Loop / 4-Wire DDITS Trunk Port Combination - Conversion with Change - Trunk Top 8 MSAs only			UEPDC	USAWB		269.96	269.96					19.99	19.99		
ADDITIONAL NRCs																
	4-Wire DS1 Loop / 4-Wire DDITS Trunk Port - Subsequent Service Activity Per Service Order			UEPDC	USAS4		147.47	147.47								
	4-Wire DS1 Loop / 4-Wire DDITS Trunk Port - NRC - Subsequent Channel Activation/Chan - 2-Way Trunk			UEPDC	UDTTA		28.71	28.71					19.99	19.99		
	4-Wire DS1 Loop / 4-Wire DDITS Trunk Port - Subsequent Channel Activation/Chan - 1-Way Outward Trunk			UEPDC	UDTTB		28.71	28.71					19.99	19.99		
	4-Wire DS1 Loop / 4-Wire DDITS Trunk Port - Subsqnt Channel Activation/Chan Inward Trunk w/out DID			UEPDC	UDTTC		28.71	28.71					19.99	19.99		
	4-Wire DS1 Loop / 4-Wire DDITS Trunk Port - Subsqnt Chan Activation Per Chan - Inward Trunk with DID			UEPDC	UDTTD		28.71	28.71					19.99	19.99		
	4-Wire DS1 Loop / 4-Wire DDITS Trunk Port - Subsqnt Chan Activation / Chan - 2-Way DID w User Trans			UEPDC	UDTTE		28.71	28.71					19.99	19.99		
BIPOLAR 8 ZERO SUBSTITUTION																
	B8ZS -Superframe Format			UEPDC	CCOSF		0.00	600.00								
	B8ZS - Extended Superframe Format			UEPDC	CCOEF		0.00	600.00								
Alternate Mark Inversion																
	AMI -Superframe Format			UEPDC	MCOSF		0.00	0.00								
	AMI - Extended SuperFrame Format			UEPDC	MCOPO		0.00	0.00								
Telephone Number/Trunk Group Establisment Charges																
	Telephone Number for 2-Way Trunk Group			UEPDC	UDTGX	0.00										
	Telephone Number for 1-Way Outward Trunk Group			UEPDC	UDTGY	0.00										
	Telephone Number for 1-Way Inward Trunk Group Without DID			UEPDC	UDTGZ	0.00										
	DID Numbers, Establish Trunk Group and Provide First Group of 20 DID Numbers			UEPDC	NDZ	0.00	0.00	0.00								
	DID Numbers for each Group of 20 DID Numbers			UEPDC	ND4	0.00										
	DID Numbers, Non- consecutive DID Numbers , Per Number			UEPDC	ND5	0.00										
	Reserve Non-Consecutive DID Nos.			UEPDC	ND6	0.00	0.00	0.00								
	Reserve DID Numbers			UEPDC	NDV	0.00	0.00	0.00								
Dedicated DS1 (Interoffice Channel Mileage) -																
FX/FCO for 4-Wire DS1 Digital Loop with 4-Wire DDITS Trunk Port																
	Interoffice Channel Mileage - Fixed rate 0-8 miles (Facilities Termination)			UEPDC	1LNO1	78.47	147.07	111.75					19.99	19.99		
	Interoffice Channel Mileage - Additional rate per mile - 0-8 miles			UEPDC	1LNOA	0.4523	0.00	0.00								
	Interoffice Channel Mileage - Fixed rate 9-25 miles (Facilities Termination)			UEPDC	1LNO2	0.00	0.00	0.00								
	Interoffice Channel Mileage - Additional rate per mile - 9-25 miles			UEPDC	1LNOB	0.4523	0.00	0.00								

CATEGORY	RATE ELEMENTS	Interim	Zone	BCS	USOC	RATES ($) Rec	Nonrecurring First	Nonrecurring Add'l	Nonrecurring Disconnect First	Nonrecurring Disconnect Add'l	Svc Order Submitted Elec per LSR	Svc Order Submitted Manually per LSR	Attachment: 2 Incremental Charge - Manual Svc Order vs. Electronic-1st	Attachment: 2 Incremental Charge - Manual Svc Order vs. Electronic-Add'l	Exhibit: B Incremental Charge - Manual Svc Order vs. Electronic-Disc 1st	Exhibit: B Incremental Charge - Manual Svc Order vs. Electronic-Disc Add'l
											OSS Rates($)					
											SOMEC	SOMAN	SOMAN	SOMAN	SOMAN	SOMAN
	Interoffice Channel Mileage - Fixed rate 25+ miles (Facilities Termination)			UEPDC	1LNO3	0.00	0.00	0.00								
	Interoffice Channel Mileage - Additional rate per mile - 25+ miles			UEPDC	1LNOC	0.4523	0.00	0.00								
	Local Number Portability, per DS0 Activated			UEPDC	LNPCP	3.15										
	Central Office Termininating Point			UEPDC	CTG	0.00										
4-WIRE DS1 LOOP WITH CHANNELIZATION WITH PORT																
System is 1 DS1 Loop, 1 D4 Channel Bank, and up to 24 Feature Activations																
A system can have various rate combinations based on type and number of ports used																
UNE DS1 Loop																
	4-Wire DS1 Loop - UNE Zone 1		1	UEPMG	USLDC	55.53	0.00	0.00								
	4-Wire DS1 Loop - UNE Zone 2		2	UEPMG	USLDC	64.13	0.00	0.00								
	4-Wire DS1 Loop - UNE Zone 3		3	UEPMG	USLDC	101.93	0.00	0.00								
UNE DSO Channelization Capacities (D4 Channel Bank Configurations)																
	24 DSO Channel Capacity - 1 per DS1			UEPMG	VUM24	102.64	0.00	0.00					19.99	19.99		
	48 DSO Channel Capacity - 1 per 2 DS1s			UEPMG	VUM48	205.28	0.00	0.00					19.99	19.99		
	96 DSO Channel Capacity -1per 4 DS1s			UEPMG	VUM96	410.56	0.00	0.00					19.99	19.99		
	144 DS0 Channel Capacity - 1 per 6 DS1s			UEPMG	VUM14	615.84	0.00	0.00					19.99	19.99		
	192 DS0 Channel Capacity -1 per 8 DS1s			UEPMG	VUM19	821.12	0.00	0.00					19.99	19.99		
	240 DS0 Channel Capacity - 1 per 10 DS1s			UEPMG	VUM2O	1,026.40	0.00	0.00					19.99	19.99		
	288 DS0 Channel Capacity - 1 per 12 DS1s			UEPMG	VUM28	1,231.68	0.00	0.00					19.99	19.99		
	384 DS0 Channel Capacity - 1 per 16 DS1s			UEPMG	VUM38	1,642.24	0.00	0.00					19.99	19.99		
	480 DS0 Channel Capacity - 1 per 20 DS1s			UEPMG	VUM4O	2,052.80	0.00	0.00					19.99	19.99		
	576 DS0 Channel Capacity -1 per 24 DS1s			UEPMG	VUM57	2,463.36	0.00	0.00					19.99	19.99		
	672 DS0 Channel Capacity - 1 per 28 DS1s			UEPMG	VUM67	2,873.92	0.00	0.00					19.99	19.99		
Non-Recurring Charges (NRC) Associated with 4-Wire DS1 Loop with Channeliztion with Port - Conversion Charge Based on a System																
A Minimum System configuration is One (1) DS1, One (1) D4 Channel Bank, and Up To 24 DSO Ports with Feature Activations.																
Multiples of this configuration functioning as one are considered Add'l after the minimum system configuration is counted.																
	NRC - Conversion (Currently Combined) with or without BellSouth Allowed Changes - Top 8 MSAs Only			UEPMG	USAC4	0.00	450.00	50.00					19.99	19.99		
System Additions Where Currently Combined and New (Not Currently Combined)																
In Density Zone 1 Top 8 MSAs																
	1 DS1/D4 Channel Bank - Add NRC for each Port and Assoc Fea Activation -			UEPMG	VUMD4	0.00	950.00	600.00	200.00	30.00			19.99	19.99		
Bipolar 8 Zero Substitution																
	Clear Channel Capability Format, superframe - Subsequent Activity Only			UEPMG	CCOSF	0.00	0.00	600.00								
	Clear Channel Capability Format - Extended Superframe - Subsequent Activity Only			UEPMG	CCOEF	0.00	0.00	600.00								
Alternate Mark Inversion (AMI)																
	Superframe Format			UEPMG	MCOSF	0.00	0.00	0.00								
	Extended Superframe Format			UEPMG	MCOPO	0.00	0.00	0.00								
Exchange Ports Associated with 4-Wire DS1 Loop with Channelization with Port																
Exchange Ports																
	Line Side Combination Channelized PBX Trunk Port - Business			UEPPX	UEPCX	14.00	0.00	0.00	0.00	0.00			33.67	7.88		
	Line Side Outward Channelized PBX Trunk Port - Business			UEPPX	UEPOX	14.00	0.00	0.00	0.00	0.00			33.67	7.88		
	Line Side Inward Only Channelized PBX Trunk Port without DID			UEPPX	UEP1X	14.00	0.00	0.00	0.00	0.00			33.67	7.88		
	2-Wire Trunk Side Unbundled Channelized DID Trunk Port			UEPPX	UEPDM	83.00	0.00	0.00	0.00	0.00			33.67	7.88		
Feature Activations - Unbundled Loop Concentration																
	Feature (Service) Activation for each Line Port Terminated in D4 Bank			UEPPX	1PQWM	0.62	40.00	20.00	6.00	5.00			33.67	7.88		
	Feature (Service) Activation for each Trunk Port Terminated in D4 Bank			UEPPX	1PQWU	0.62	110.00	30.00	65.00	20.00			33.67	7.88		
Telephone Number/ Group Establishment Charges for DID Service																
	DID Trunk Termination (1 per Port)			UEPPX	NDT	0.00	0.00	0.00								
	Estab Trk Grp and Provide 1st 20 DID Nos. (FL,GA, NC,& SC)			UEPPX	NDZ	0.00	0.00	0.00								
	DID Numbers - groups of 20 - Valid all States			UEPPX	ND4	0.00	0.00	0.00								

CATEGORY	RATE ELEMENTS	Interim	Zone	BCS	USOC	RATES ($)					Svc Order Submitted Elec per LSR	Svc Order Submitted Manually per LSR	Incremental Charge - Manual Svc Order vs. Electronic-1st	Incremental Charge - Manual Svc Order vs. Electronic-Add'l	Incremental Charge - Manual Svc Order vs. Electronic-Disc 1st	Incremental Charge - Manual Svc Order vs. Electronic-Disc Add'l
						Rec	Nonrecurring		Nonrecurring Disconnect		OSS Rates($)					
							First	Add'l	First	Add'l	SOMEC	SOMAN	SOMAN	SOMAN	SOMAN	SOMAN
	Non-Consecutive DID Numbers - per number			UEPPX	ND5	0.00	0.00	0.00								
	Reserve Non-Consecutive DID Numbers			UEPPX	ND6	0.00	0.00	0.00								
	Reserve DID Numbers			UEPPX	NDV	0.00	0.00	0.00								
Local Number Portability																
	Local Number Portability - 1 per port			UEPPX	LNPCP	3.15	0.00	0.00								
FEATURES - Vertical and Optional																
Local Switching Features Offered with Line Side Ports Only																
	All Features Available			UEPPX	UEPVF	0.00	0.00	0.00								
UNBUNDLED CENTREX PORT/LOOP COMBINATIONS - COST BASED RATES																
1. Cost Based Rates are applied where BellSouth is required by FCC and/or State Commission rule to provide Unbundled Local Switching or Switch Ports.																
2. Features shall apply to the Unbundled Port/Loop Combination - Cost Based Rate section in the same manner as they are applied to the Stand-Alone Unbundled Port section of this Rate Exhibit.																
3. End Office and Tandem Switching Usage and Common Transport Usage rates in the Port section of this rate exhibit shall apply to all combinations of loop/port network elements except for UNE Coin Port/Loop Combinations.																
4. The first and additional Port nonrecurring charges apply to Not Currently Combined Combos. For Currently Combined Combos, the nonrecurring charges shall be those identified in the Nonrecurring - Currently Combined sections. Additional NRCs may apply also and are categorized accordingly.																
5. Market Rates for Unbundled Centrex Port/Loop Combination will be negotiated on an Individual Case Basis, until further notice.																
UNE-P CENTREX - 1AESS - (Valid in AL,FL,GA,KY,LA,MS,&TN only)																
2-Wire VG Loop/2-Wire Voice Grade Port (Centrex) Combo																
UNE Port/Loop Combination Rates (Non-Design)																
	2-Wire VG Loop/2-Wire Voice Grade Port (Centrex) Port Combo - Non-Design		1	UEP91		12.59										
	2-Wire VG Loop/2-Wire Voice Grade Port (Centrex)Port Combo - Non-Design		2	UEP91		14.26										
	2-Wire VG Loop/2-Wire Voice Grade Port (Centrex)Port Combo - Non-Design		3	UEP91		21.62										
UNE Port/Loop Combination Rates (Design)																
	2-Wire VG Loop/2-Wire Voice Grade Port (Centrex) Port Combo - Design		1	UEP91		18.63										
	2-Wire VG Loop/2-Wire Voice Grade Port (Centrex)Port Combo - Design		2	UEP91		21.24										
	2-Wire VG Loop/2-Wire Voice Grade Port (Centrex)Port Combo - Design		3	UEP91		32.71										
UNE Loop Rate																
	2-Wire Voice Grade Loop (SL 1) - Zone 1		1	UEP91	UECS1	10.80										
	2-Wire Voice Grade Loop (SL 1) - Zone 2		2	UEP91	UECS1	12.47										
	2-Wire Voice Grade Loop (SL 1) - Zone 3		3	UEP91	UECS1	19.83										
	2-Wire Voice Grade Loop (SL 2) - Zone 1		1	UEP91	UECS2	16.84										
	2-Wire Voice Grade Loop (SL 2) - Zone 2		2	UEP91	UECS2	19.45										
	2-Wire Voice Grade Loop (SL 2) - Zone 3		3	UEP91	UECS2	30.92										
UNE Ports																
All States (Except North Carolina and Sout Carolina)																
	2-Wire Voice Grade Port (Centrex) Basic Local Area			UEP91	UEPYA	1.79	22.14	15.25	8.45	3.91			33.67	7.88		
	2-Wire Voice Grade Port (Centrex 800 termination)Basic Local Area			UEP91	UEPYB	1.79	22.14	15.25	8.45	3.91			33.67	7.88		
	2-Wire Voice Grade Port (Centrex with Caller ID)1Basic Local Area			UEP91	UEPYH	1.79	22.14	15.25	8.45	3.91			33.67	7.88		
	2-Wire Voice Grade Port (Centrex from diff Serving Wire Center)2 Basic Local Area			UEP91	UEPYM	1.79	22.14	15.25	8.45	3.91			33.67	7.88		
	2-Wire Voice Grade Port, Diff Serving Wire Center - 800 Service Term - Basic Local Area			UEP91	UEPYZ	1.79	22.14	15.25	8.45	3.91			33.67	7.88		
	2-Wire Voice Grade Port terminated in on Megalink or equivalent - Basic Local Area			UEP91	UEPY9	1.79	22.14	15.25	8.45	3.91			33.67	7.88		
	2-Wire Voice Grade Port Terminated on 800 Service Term - Basic Local Area			UEP91	UEPY2	1.79	22.14	15.25	8.45	3.91			33.67	7.88		
Georgia and Florida Only																
	2-Wire Voice Grade Port (Centrex)			UEP91	UEPHA	1.79	22.14	15.25	8.45	3.91			33.67	7.88		
	2-Wire Voice Grade Port (Centrex 800 termination)			UEP91	UEPHB	1.79	22.14	15.25	8.45	3.91			33.67	7.88		
	2-Wire Voice Grade Port (Centrex with Caller ID)1			UEP91	UEPHH	1.79	22.14	15.25	8.45	3.91			33.67	7.88		
	2-Wire Voice Grade Port (Centrex from diff Serving Wire Center)2			UEP91	UEPHM	1.79	22.14	15.25	8.45	3.91			33.67	7.88		

UNBUNDLED NETWORK ELEMENTS - Georgia														Attachment: 2		Exhibit: B	
CATEGORY	RATE ELEMENTS	Interim	Zone	BCS	USOC	RATES ($)					Svc Order Submitted Elec per LSR	Svc Order Submitted Manually per LSR	Incremental Charge - Manual Svc Order vs. Electronic-1st	Incremental Charge - Manual Svc Order vs. Electronic-Add'l	Incremental Charge - Manual Svc Order vs. Electronic-Disc 1st	Incremental Charge - Manual Svc Order vs. Electronic-Disc Add'l
						Rec	Nonrecurring		Nonrecurring Disconnect		OSS Rates($)					
							First	Add'l	First	Add'l	SOMEC	SOMAN	SOMAN	SOMAN	SOMAN	SOMAN
	2-Wire Voice Grade Port, Diff Serving Wire Center - 800 Service Term			UEP91	UEPHZ	1.79	22.14	15.25	8.45	3.91			33.67	7.88		
	2-Wire Voice Grade Port terminated in on Megalink or equivalent			UEP91	UEPH9	1.79	22.14	15.25	8.45	3.91			33.67	7.88		
	2-Wire Voice Grade Port Terminated on 800 Service Term			UEP91	UEPH2	1.79	22.14	15.25	8.45	3.91			33.67	7.88		
Local Switching																
	Centrex Intercom Funtionality, per port			UEP91	URECS	0.5554										
Local Number Portability																
	Local Number Portability (1 per port)			UEP91	LNPCC	0.35										
Features																
	All Standard Features Offered, per port			UEP91	UEPVF	0.00										
	All Select Features Offered, per port			UEP91	UEPVS	0.00	454.69									
	All Centrex Control Features Offered, per port			UEP91	UEPVC	0.00										
NARS																
	Unbundled Network Access Register - Combination			UEP91	UARCX	0.00	0.00	0.00					33.67	7.88		
	Unbundled Network Access Register - Indial			UEP91	UAR1X	0.00	0.00	0.00					33.67	7.88		
	Unbundled Network Access Register - Outdial			UEP91	UAROX	0.00	0.00	0.00					33.67	7.88		
Miscellaneous Terminations																
2-Wire Trunk Side																
	Trunk Side Terminations, each			UEP91	CENA6	11.35	61.91	61.91					33.67	7.88		
Interoffice Channel Mileage - 2-Wire																
	Interoffice Channel Facilities Termination - Voice Grade			UEP91	M1GBC	17.07										
	Interoffice Channel mileage, per mile or fraction of mile			UEP91	M1GBM	0.0222										
Feature Activations (DS0) Centrex Loops on Channelized DS1 Service																
D4 Channel Bank Feature Activations																
	Feature Activation on D-4 Channel Bank Centrex Loop Slot			UEP91	1PQWS	0.62										
	Feature Activation on D-4 Channel Bank FX line Side Loop Slot			UEP91	1PQW6	0.62										
	Feature Activation on D-4 Channel Bank FX Trunk Side Loop Slot			UEP91	1PQW7	0.62										
	Feature Activation on D-4 Channel Bank Centrex Loop Slot - Different Wire Center			UEP91	1PQWP	0.62										
	Feature Activation on D-4 Channel Bank Private Line Loop Slot			UEP91	1PQWV	0.62										
	Feature Activation on D-4 Channel Bank Tjie Line/Trunk Loop Slot			UEP91	1PQWQ	0.62										
	Feature Activation on D-4 Channel Bank WATS Loop Slot			UEP91	1PQWA	0.62										
Non-Recurring Charges (NRC) Associated with UNE-P Centrex																
	Conversion - Currently Combined Switch-As-Is with allowed changes, per port			UEP91	USAC2		2.01	0.3108					33.67	7.88		
	New Centrex Standard Common Block			UEP91	M1ACS	0.00	659.41						33.67	7.88		
	New Centrex Customized Common Block			UEP91	M1ACC	0.00	659.41						33.67	7.88		
	Secondary Block, per Block			UEP91	M2CC1	0.00	77.10						33.67	7.88		
	NAR Establishment Charge, Per Occasion			UEP91	URECA	0.00	71.88						33.67	7.88		
UNE-P CENTREX - 5ESS (Valid in All States)																
2-Wire VG Loop/2-Wire Voice Grade Port (Centrex) Combo																
UNE Port/Loop Combination Rates (Non-Design)																
	2-Wire VG Loop/2-Wire Voice Grade Port (Centrex) Port Combo - Non-Design		1	UEP95		12.59										
	2-Wire VG Loop/2-Wire Voice Grade Port (Centrex)Port Combo - Non-Design		2	UEP95		14.26										
	2-Wire VG Loop/2-Wire Voice Grade Port (Centrex)Port Combo - Non-Design		3	UEP95		21.62										
UNE Port/Loop Combination Rates (Design)																
	2-Wire VG Loop/2-Wire Voice Grade Port (Centrex) Port Combo - Design		1	UEP95		18.63										
	2-Wire VG Loop/2-Wire Voice Grade Port (Centrex)Port Combo - Design		2	UEP95		21.24										

UNBUNDLED NETWORK ELEMENTS - Georgia													Attachment: 2		Exhibit: B	
CATEGORY	RATE ELEMENTS	Interim	Zone	BCS	USOC	RATES ($)					Svc Order Submitted Elec per LSR	Svc Order Submitted Manually per LSR	Incremental Charge - Manual Svc Order vs. Electronic-1st	Incremental Charge - Manual Svc Order vs. Electronic-Add'l	Incremental Charge - Manual Svc Order vs. Electronic-Disc 1st	Incremental Charge - Manual Svc Order vs. Electronic-Disc Add'l
						Rec	Nonrecurring		Nonrecurring Disconnect		OSS Rates($)					
							First	Add'l	First	Add'l	SOMEC	SOMAN	SOMAN	SOMAN	SOMAN	SOMAN
	2-Wire VG Loop/2-Wire Voice Grade Port (Centrex)Port Combo - Design		3	UEP95		32.71										
UNE Loop Rate																
	2-Wire Voice Grade Loop (SL 1) - Zone 1		1	UEP95	UECS1	10.80										
	2-Wire Voice Grade Loop (SL 1) - Zone 2		2	UEP95	UECS1	12.47										
	2-Wire Voice Grade Loop (SL 1) - Zone 3		3	UEP95	UECS1	19.83										
	2-Wire Voice Grade Loop (SL 2) - Zone 1		1	UEP95	UECS2	16.84										
	2-Wire Voice Grade Loop (SL 2) - Zone 2		2	UEP95	UECS2	19.45										
	2-Wire Voice Grade Loop (SL 2) - Zone 3		3	UEP95	UECS2	30.92										
UNE Port Rate																
All States																
	2-Wire Voice Grade Port (Centrex) Basic Local Area			UEP95	UEPYA	1.79	22.14	15.25	8.45	3.91			33.67	7.88		
	2-Wire Voice Grade Port (Centrex 800 termination)			UEP95	UEPYB	1.79	22.14	15.25	8.45	3.91			33.67	7.88		
	2-Wire Voice Grade Port (Centrex with Caller ID)1Basic Local Area			UEP95	UEPYH	1.79	22.14	15.25	8.45	3.91			33.67	7.88		
	2-Wire Voice Grade Port (Centrex from diff Serving Wire Center)2 Basic Local Area			UEP95	UEPYM	1.79	22.14	15.25	8.45	3.91			33.67	7.88		
	2-Wire Voice Grade Port, Diff Serving Wire Center - 800 Service Term - Basic Local Area			UEP95	UEPYZ	1.79	22.14	15.25	8.45	3.91			33.67	7.88		
	2-Wire Voice Grade Port terminated in on Megalink or equivalent - Basic Local Area			UEP95	UEPY9	1.79	22.14	15.25	8.45	3.91			33.67	7.88		
	2-Wire Voice Grade Port Terminated on 800 Service Term - Basic Local Area			UEP95	UEPY2	1.79	22.14	15.25	8.45	3.91			33.67	7.88		
FL & GA Only																
	2-Wire Voice Grade Port (Centrex)			UEP95	UEPHA	1.79	22.14	15.25	8.45	3.91			33.67	7.88		
	2-Wire Voice Grade Port (Centrex 800 termination)			UEP95	UEPHB	1.79	22.14	15.25	8.45	3.91			33.67	7.88		
	2-Wire Voice Grade Port (Centrex with Caller ID)1			UEP95	UEPHH	1.79	22.14	15.25	8.45	3.91			33.67	7.88		
	2-Wire Voice Grade Port (Centrex from diff Serving Wire Center)2			UEP95	UEPHM	1.79	22.14	15.25	8.45	3.91			33.67	7.88		
	2-Wire Voice Grade Port, Diff Serving Wire Center - 800 Service Term			UEP95	UEPHZ	1.79	22.14	15.25	8.45	3.91			33.67	7.88		
	2-Wire Voice Grade Port terminated in on Megalink or equivalent			UEP95	UEPH9	1.79	22.14	15.25	8.45	3.91			33.67	7.88		
	2-Wire Voice Grade Port Terminated on 800 Service Term			UEP95	UEPH2	1.79	22.14	15.25	8.45	3.91			33.67	7.88		
Local Switching																
	Centrex Intercom Funtionality, per port			UEP95	URECS	0.5554										
Local Number Portability																
	Local Number Portability (1 per port)			UEP95	LNPCC	0.35										
Features																
	All Standard Features Offered, per port			UEP95	UEPVF	0.00							33.67	7.88		
	All Select Features Offered, per port			UEP95	UEPVS	0.00	454.69						33.67	7.88		
	All Centrex Control Features Offered, per port			UEP95	UEPVC	0.00							33.67	7.88		
NARS																
	Unbundled Network Access Register - Combination			UEP95	UARCX	0.00	0.00	0.00					33.67	7.88		
	Unbundled Network Access Register - Indial			UEP95	UAR1X	0.00	0.00	0.00					33.67	7.88		
	Unbundled Network Access Register - Outdial			UEP95	UAROX	0.00	0.00	0.00					33.67	7.88		
Miscellaneous Terminations																
2-Wire Trunk Side																
	Trunk Side Terminations, each			UEP95	CEND6	11.35	61.91	61.91					33.67	7.88		
4-Wire Digital (1.544 Megabits)																
	DS1 Circuit Terminations, each			UEP95	M1HD1	120.80	89.44	52.46					33.67	7.88		
	DS0 Channels Activated, each			UEP95	M1HDO	0.00	28.71						33.67	7.88		
Interoffice Channel Mileage - 2-Wire																
	Interoffice Channel Facilities Termination			UEP95	M1GBC	17.07										
	Interoffice Channel mileage, per mile or fraction of mile			UEP95	M1GBM	0.0222										
Feature Activations (DS0) Centrex Loops on Channelized DS1 Service																
D4 Channel Bank Feature Activations																
	Feature Activation on D-4 Channel Bank Centrex Loop Slot			UEP95	1PQWS	0.62										

CATEGORY	RATE ELEMENTS	Interim	Zone	BCS	USOC	RATES ($)					Svc Order Submitted Elec per LSR	Svc Order Submitted Manually per LSR	Attachment: 2 Incremental Charge - Manual Svc Order vs. Electronic-1st	Attachment: 2 Incremental Charge - Manual Svc Order vs. Electronic-Add'l	Exhibit: B Incremental Charge - Manual Svc Order vs. Electronic-Disc 1st	Exhibit: B Incremental Charge - Manual Svc Order vs. Electronic-Disc Add'l
						Rec	Nonrecurring		Nonrecurring Disconnect		OSS Rates($)					
							First	Add'l	First	Add'l	SOMEC	SOMAN	SOMAN	SOMAN	SOMAN	SOMAN
	Feature Activation on D-4 Channel Bank FX line Side Loop Slot			UEP95	1PQW6	0.62										
	Feature Activation on D-4 Channel Bank FX Trunk Side Loop Slot			UEP95	1PQW7	0.62										
	Feature Activation on D-4 Channel Bank Centrex Loop Slot - Different Wire Center			UEP95	1PQWP	0.62										
	Feature Activation on D-4 Channel Bank Private Line Loop Slot			UEP95	1PQWV	0.62										
	Feature Activation on D-4 Channel Bank Tjie Line/Trunk Loop Slot			UEP95	1PQWQ	0.62										
	Feature Activation on D-4 Channel Bank WATS Loop Slot			UEP95	1PQWA	0.62										
	Non-Recurring Charges (NRC) Associated with UNE-P Centrex															
	NRC Conversion Currently Combined Switch-As-Is with allowed changes, per port			UEP95	USAC2		2.01	0.3108					33.67	7.88		
	New Centrex Standard Common Block			UEP95	M1ACS	0.00	659.41						33.67	7.88		
	New Centrex Customized Common Block			UEP95	M1ACC	0.00	659.41						33.67	7.88		
	NAR Establishment Charge, Per Occasion			UEP95	URECA	0.00	71.88						33.67	7.88		
	UNE-P CENTREX - DMS100 (Valid in All States)															
	2-Wire VG Loop/2-Wire Voice Grade Port (Centrex) Combo															
	UNE Port/Loop Combination Rates (Non-Design)															
	2-Wire VG Loop/2-Wire Voice Grade Port (Centrex) Port Combo - Non-Design		1	UEP9D		12.59										
	2-Wire VG Loop/2-Wire Voice Grade Port (Centrex)Port Combo - Non-Design		2	UEP9D		14.26										
	2-Wire VG Loop/2-Wire Voice Grade Port (Centrex)Port Combo - Non-Design		3	UEP9D		21.62										
	UNE Port/Loop Combination Rates (Design)															
	2-Wire VG Loop/2-Wire Voice Grade Port (Centrex) Port Combo - Design		1	UEP9D		18.63										
	2-Wire VG Loop/2-Wire Voice Grade Port (Centrex)Port Combo - Design		2	UEP9D		21.24										
	2-Wire VG Loop/2-Wire Voice Grade Port (Centrex)Port Combo - Design		3	UEP9D		32.71										
	UNE Loop Rate															
	2-Wire Voice Grade Loop (SL 1) - Zone 1		1	UEP9D	UECS1	10.80										
	2-Wire Voice Grade Loop (SL 1) - Zone 2		2	UEP9D	UECS1	12.47										
	2-Wire Voice Grade Loop (SL 1) - Zone 3		3	UEP9D	UECS1	19.83										
	2-Wire Voice Grade Loop (SL 2) - Zone 1		1	UEP9D	UECS2	16.84										
	2-Wire Voice Grade Loop (SL 2) - Zone 2		2	UEP9D	UECS2	19.45										
	2-Wire Voice Grade Loop (SL 2) - Zone 3		3	UEP9D	UECS2	30.92										
	UNE Port Rate															
	ALL STATES															
	2-Wire Voice Grade Port (Centrex) Basic Local Area			UEP9D	UEPYA	1.79	22.14	15.25	8.45	3.91			33.67	7.88		
	2-Wire Voice Grade Port (Centrex 800 termination)Basic Local Area			UEP9D	UEPYB	1.79	22.14	15.25	8.45	3.91			33.67	7.88		
	2-Wire Voice Grade Port (Centrex / EBS-PSET)3Basic Local Area			UEP9D	UEPYC	1.79	22.14	15.25	8.45	3.91			33.67	7.88		
	2-Wire Voice Grade Port (Centrex / EBS-M5009)3Basic Local Area			UEP9D	UEPYD	1.79	22.14	15.25	8.45	3.91			33.67	7.88		
	2-Wire Voice Grade Port (Centrex / EBS-M5209))3 Basic Local Area			UEP9D	UEPYE	1.79	22.14	15.25	8.45	3.91			33.67	7.88		
	2-Wire Voice Grade Port (Centrex / EBS-M5112))3 Basic Local Area			UEP9D	UEPYF	1.79	22.14	15.25	8.45	3.91			33.67	7.88		
	2-Wire Voice Grade Port (Centrex / EBS-M5312))3Basic Local Area			UEP9D	UEPYG	1.79	22.14	15.25	8.45	3.91			33.67	7.88		
	2-Wire Voice Grade Port (Centrex / EBS-M5008))3 Basic Local Area			UEP9D	UEPYT	1.79	22.14	15.25	8.45	3.91			33.67	7.88		
	2-Wire Voice Grade Port (Centrex / EBS-M5208))3 Basic Local Area			UEP9D	UEPYU	1.79	22.14	15.25	8.45	3.91			33.67	7.88		

CATEGORY	RATE ELEMENTS	Interim	Zone	BCS	USOC	RATES ($)					Svc Order Submitted Elec per LSR	Svc Order Submitted Manually per LSR	Attachment: 2 Incremental Charge - Manual Svc Order vs. Electronic-1st	Attachment: 2 Incremental Charge - Manual Svc Order vs. Electronic-Add'l	Exhibit: B Incremental Charge - Manual Svc Order vs. Electronic-Disc 1st	Exhibit: B Incremental Charge - Manual Svc Order vs. Electronic-Disc Add'l
						Rec	Nonrecurring		Nonrecurring Disconnect		OSS Rates($)					
							First	Add'l	First	Add'l	SOMEC	SOMAN	SOMAN	SOMAN	SOMAN	SOMAN
	2-Wire Voice Grade Port (Centrex / EBS-M5216))3 Basic Local Area			UEP9D	UEPYV	1.79	22.14	15.25	8.45	3.91			33.67	7.88		
	2-Wire Voice Grade Port (Centrex / EBS-M5316))3 Basic Local Area			UEP9D	UEPY3	1.79	22.14	15.25	8.45	3.91			33.67	7.88		
	2-Wire Voice Grade Port (Centrex with Caller ID) Basic Local Area			UEP9D	UEPYH	1.79	22.14	15.25	8.45	3.91			33.67	7.88		
	2-Wire Voice Grade Port (Centrex/Caller ID/Msg Wtg Lamp Indication))3 Basic Local Area			UEP9D	UEPYW	1.79	22.14	15.25	8.45	3.91			33.67	7.88		
	2-Wire Voice Grade Port (Centrex/Msg Wtg Lamp Indication))3 Basic Local Area			UEP9D	UEPYJ	1.79	22.14	15.25	8.45	3.91			33.67	7.88		
	2-Wire Voice Grade Port (Centrex from diff Serving Wire Center) 2 Basic Local Area			UEP9D	UEPYM	1.79	22.14	15.25	8.45	3.91			33.67	7.88		
	2-Wire Voice Grade Port (Centrex/differ SWC /EBS-PSET)2, 3 Basic Local Area			UEP9D	UEPYO	1.79	22.14	15.25	8.45	3.91			33.67	7.88		
	2-Wire Voice Grade Port (Centrex/differ SWC /EBS-M5009)2, 3 Basic Local Area			UEP9D	UEPYP	1.79	22.14	15.25	8.45	3.91			33.67	7.88		
	2-Wire Voice Grade Port (Centrex/differ SWC /EBS-5209)2, 3 Basic Local Area			UEP9D	UEPYQ	1.79	22.14	15.25	8.45	3.91			33.67	7.88		
	2-Wire Voice Grade Port (Centrex/differ SWC /EBS-M5112)2, 3 Basic Local Area			UEP9D	UEPYR	1.79	22.14	15.25	8.45	3.91			33.67	7.88		
	2-Wire Voice Grade Port (Centrex/differ SWC /EBS-M5312)2, 3 Basic Local Area			UEP9D	UEPYS	1.79	22.14	15.25	8.45	3.91			33.67	7.88		
	2-Wire Voice Grade Port (Centrex/differ SWC /EBS-M5008)2, 3 Basic Local Area			UEP9D	UEPY4	1.79	22.14	15.25	8.45	3.91			33.67	7.88		
	2-Wire Voice Grade Port (Centrex/differ SWC /EBS-M5208)2, 3 Basic Local Area			UEP9D	UEPY5	1.79	22.14	15.25	8.45	3.91			33.67	7.88		
	2-Wire Voice Grade Port (Centrex/differ SWC /EBS-M5216)2, 3 Basic Local Area			UEP9D	UEPY6	1.79	22.14	15.25	8.45	3.91			33.67	7.88		
	2-Wire Voice Grade Port (Centrex/differ SWC /EBS-M5316)2, 3 Basic Local Area			UEP9D	UEPY7	1.79	22.14	15.25	8.45	3.91			33.67	7.88		
	2-Wire Voice Grade Port, Diff Serving Wire Center - 800 Service Term			UEP9D	UEPYZ	1.79	22.14	15.25	8.45	3.91			33.67	7.88		
	2-Wire Voice Grade Port terminated in on Megalink or equivalent Basic Local Area			UEP9D	UEPY9	1.79	22.14	15.25	8.45	3.91			33.67	7.88		
	2-Wire Voice Grade Port Terminated on 800 Service Term Basic Local Area			UEP9D	UEPY2	1.79	22.14	15.25	8.45	3.91			33.67	7.88		
FL & GA Only																
	2-Wire Voice Grade Port (Centrex)			UEP9D	UEPHA	1.79	22.14	15.25	8.45	3.91			33.67	7.88		
	2-Wire Voice Grade Port (Centrex 800 termination)			UEP9D	UEPHB	1.79	22.14	15.25	8.45	3.91			33.67	7.88		
	2-Wire Voice Grade Port (Centrex / EBS-PSET)3			UEP9D	UEPHC	1.79	22.14	15.25	8.45	3.91			33.67	7.88		
	2-Wire Voice Grade Port (Centrex / EBS-M5009)3			UEP9D	UEPHD	1.79	22.14	15.25	8.45	3.91			33.67	7.88		
	2-Wire Voice Grade Port (Centrex / EBS-M5209)3			UEP9D	UEPHE	1.79	22.14	15.25	8.45	3.91			33.67	7.88		
	2-Wire Voice Grade Port (Centrex / EBS-M5112)3			UEP9D	UEPHF	1.79	22.14	15.25	8.45	3.91			33.67	7.88		
	2-Wire Voice Grade Port (Centrex / EBS-M5312)3			UEP9D	UEPHG	1.79	22.14	15.25	8.45	3.91			33.67	7.88		
	2-Wire Voice Grade Port (Centrex / EBS-M5008)3			UEP9D	UEPHT	1.79	22.14	15.25	8.45	3.91			33.67	7.88		
	2-Wire Voice Grade Port (Centrex / EBS-M5208)3			UEP9D	UEPHU	1.79	22.14	15.25	8.45	3.91			33.67	7.88		
	2-Wire Voice Grade Port (Centrex / EBS-M5216)3			UEP9D	UEPHV	1.79	22.14	15.25	8.45	3.91			33.67	7.88		
	2-Wire Voice Grade Port (Centrex / EBS-M5316)3			UEP9D	UEPH3	1.79	22.14	15.25	8.45	3.91			33.67	7.88		
	2-Wire Voice Grade Port (Centrex with Caller ID)			UEP9D	UEPHH	1.79	22.14	15.25	8.45	3.91			33.67	7.88		
	2-Wire Voice Grade Port (Centrex/Caller ID/Msg Wtg Lamp Indication)3			UEP9D	UEPHW	1.79	22.14	15.25	8.45	3.91			33.67	7.88		
	2-Wire Voice Grade Port (Centrex/Msg Wtg Lamp Indication)3			UEP9D	UEPHJ	1.79	22.14	15.25	8.45	3.91			33.67	7.88		
	2-Wire Voice Grade Port (Centrex from diff Serving Wire Center) 2			UEP9D	UEPHM	1.79	22.14	15.25	8.45	3.91			33.67	7.88		
	2-Wire Voice Grade Port (Centrex/differ SWC /EBS-PSET)2, 3			UEP9D	UEPHO	1.79	22.14	15.25	8.45	3.91			33.67	7.88		
	2-Wire Voice Grade Port (Centrex/differ SWC /EBS-M5009)2, 3			UEP9D	UEPHP	1.79	22.14	15.25	8.45	3.91			33.67	7.88		
	2-Wire Voice Grade Port (Centrex/differ SWC /EBS-5209)2, 3			UEP9D	UEPHQ	1.79	22.14	15.25	8.45	3.91			33.67	7.88		

UNBUNDLED NETWORK ELEMENTS - Georgia														Attachment: 2		Exhibit: B	
CATEGORY	RATE ELEMENTS	Interim	Zone	BCS	USOC	RATES ($)					Svc Order Submitted Elec per LSR	Svc Order Submitted Manually per LSR	Incremental Charge - Manual Svc Order vs. Electronic-1st	Incremental Charge - Manual Svc Order vs. Electronic-Add'l	Incremental Charge - Manual Svc Order vs. Electronic-Disc 1st	Incremental Charge - Manual Svc Order vs. Electronic-Disc Add'l
						Rec	Nonrecurring		Nonrecurring Disconnect		OSS Rates($)					
							First	Add'l	First	Add'l	SOMEC	SOMAN	SOMAN	SOMAN	SOMAN	SOMAN
	2-Wire Voice Grade Port (Centrex/differ SWC /EBS-M5112)2, 3			UEP9D	UEPHR	1.79	22.14	15.25	8.45	3.91			33.67	7.88		
	2-Wire Voice Grade Port (Centrex/differ SWC /EBS-M5312)2, 3			UEP9D	UEPHS	1.79	22.14	15.25	8.45	3.91			33.67	7.88		
	2-Wire Voice Grade Port (Centrex/differ SWC /EBS-M5008)2, 3			UEP9D	UEPH4	1.79	22.14	15.25	8.45	3.91			33.67	7.88		
	2-Wire Voice Grade Port (Centrex/differ SWC /EBS-M5208)2, 3			UEP9D	UEPH5	1.79	22.14	15.25	8.45	3.91			33.67	7.88		
	2-Wire Voice Grade Port (Centrex/differ SWC /EBS-M5216)2, 3			UEP9D	UEPH6	1.79	22.14	15.25	8.45	3.91			33.67	7.88		
	2-Wire Voice Grade Port (Centrex/differ SWC /EBS-M5316)2, 3			UEP9D	UEPH7	1.79	22.14	15.25	8.45	3.91			33.67	7.88		
	2-Wire Voice Grade Port, Diff Serving Wire Center - 800 Service Term			UEP9D	UEPHZ	1.79	22.14	15.25	8.45	3.91			33.67	7.88		
	2-Wire Voice Grade Port terminated in on Megalink or equivalent			UEP9D	UEPH9	1.79	22.14	15.25	8.45	3.91			33.67	7.88		
	2-Wire Voice Grade Port Terminated on 800 Service Term			UEP9D	UEPH2	1.79	22.14	15.25	8.45	3.91			33.67	7.88		
Local Switching																
	Centrex Intercom Funtionality, per port			UEP9D	URECS	0.5554										
Local Number Portability																
	Local Number Portability (1 per port)			UEP9D	LNPCC	0.35										
Features																
	All Standard Features Offered, per port			UEP9D	UEPVF	0.00										
	All Select Features Offered, per port			UEP9D	UEPVS	0.00	454.69						33.67	7.88		
	All Centrex Control Features Offered, per port			UEP9D	UEPVC	0.00										
NARS																
	Unbundled Network Access Register - Combination			UEP9D	UARCX	0.00	0.00	0.00					33.67	7.88		
	Unbundled Network Access Register - Inward			UEP9D	UAR1X	0.00	0.00	0.00					33.67	7.88		
	Unbundled Network Access Register - Outdial			UEP9D	UAROX	0.00	0.00	0.00					33.67	7.88		
Miscellaneous Terminations																
2-Wire Trunk Side																
	Trunk Side Terminations, each			UEP9D	CEND6	11.35										
4-Wire Digital (1.544 Megabits)																
	DS1 Circuit Terminations, each			UEP9D	M1HD1	120.80	89.44	52.46					33.67	7.88		
	DS0 Channels Activiated per Channel			UEP9D	M1HDO	0.00	28.71						33.67	7.88		
Interoffice Channel Mileage - 2-Wire																
	Interoffice Channel Facilities Termination			UEP9D	M1GBC	17.07										
	Interoffice Channel mileage, per mile or fraction of mile			UEP9D	M1GBM	0.0222										
Feature Activations (DS0) Centrex Loops on Channelized DS1 Service																
D4 Channel Bank Feature Activations																
	Feature Activation on D-4 Channel Bank Centrex Loop Slot			UEP9D	1PQWS	0.62										
	Feature Activation on D-4 Channel Bank FX line Side Loop Slot			UEP9D	1PQW6	0.62										
	Feature Activation on D-4 Channel Bank FX Trunk Side Loop Slot			UEP9D	1PQW7	0.62										
	Feature Activation on D-4 Channel Bank Centrex Loop Slot - Different Wire Center			UEP9D	1PQWP	0.62										
	Feature Activation on D-4 Channel Bank Private Line Loop Slot			UEP9D	1PQWV	0.62										
	Feature Activation on D-4 Channel Bank Tjie Line/Trunk Loop Slot			UEP9D	1PQWQ	0.62										
	Feature Activation on D-4 Channel Bank WATS Loop Slot			UEP9D	1PQWA	0.62										
Non-Recurring Charges (NRC) Associated with UNE-P Centrex																
	NRC Conversion Currently Combined Switch-As-Is with allowed changes, per port			UEP9D	USAC2		2.01	0.3108					33.67	7.88		
	New Centrex Standard Common Block			UEP9D	M1ACS	0.00	659.41						33.67	7.88		
	New Centrex Customized Common Block			UEP9D	M1ACC	0.00	659.41						33.67	7.88		
	NAR Establishment Charge, Per Occasion			UEP9D	URECA	0.00	71.88						33.67	7.88		
Note 1 - Required Port for Centrex Control in 1AESS, 5ESS & EWSD																

UNBUNDLED NETWORK ELEMENTS - Georgia													Attachment: 2		Exhibit: B	
CATEGORY	RATE ELEMENTS	Interim	Zone	BCS	USOC	RATES ($)					Svc Order Submitted Elec per LSR	Svc Order Submitted Manually per LSR	Incremental Charge - Manual Svc Order vs. Electronic-1st	Incremental Charge - Manual Svc Order vs. Electronic-Add'l	Incremental Charge - Manual Svc Order vs. Electronic-Disc 1st	Incremental Charge - Manual Svc Order vs. Electronic-Disc Add'l
						Rec	Nonrecurring		Nonrecurring Disconnect		OSS Rates($)					
							First	Add'l	First	Add'l	SOMEC	SOMAN	SOMAN	SOMAN	SOMAN	SOMAN
	Note 2 - Requres Interoffice Channel Mileage															
	Note 3 - Requires Specific Customer Premises Equipment															
UNBUNDLED CENTREX PORT/LOOP COMBINATIONS - MARKET RATES																
	1. Market Rates are applied where BellSouth is not required by FCC and/or State Commission rule to provide Unbundled Local Switching or Switch Ports.															
	2. Recurring Charges for all Standard Centrex and Centrex Conrol Features are Included in the Market Rate															
	3. End Office and Tandem Switching Usage and Common Transport Usage rates in the Port section of this rate exhibit shall apply to all combinations of loop/port network elements except for UNE Coin Port/Loop Combinations.															
	4. The first and additional Port nonrecurring charges apply to Not Currently Combined Combos. For Currently Combined Combos, the nonrecurring charges shall be those identified in the Nonrecurring - Currently Combined sections. Additional NRCs may apply also and are categorized accordingly.															
	UNE-P CENTREX - 1AESS - (Valid in AL,FL,GA,KY,LA,MS,&TN only)															
	2-Wire VG Loop/2-Wire Voice Grade Port (Centrex) Combo															
	UNE Port/Loop Combination Rates (Non-Design)															
	2-Wire VG Loop/2-Wire Voice Grade Port (Centrex) Port Combo - Non-Design		1	UEP91		24.80										
	2-Wire VG Loop/2-Wire Voice Grade Port (Centrex)Port Combo - Non-Design		2	UEP91		26.47										
	2-Wire VG Loop/2-Wire Voice Grade Port (Centrex)Port Combo - Non-Design		3	UEP91		33.83										
	UNE Port/Loop Combination Rates (Design)															
	2-Wire VG Loop/2-Wire Voice Grade Port (Centrex) Port Combo - Design		1	UEP91		30.84										
	2-Wire VG Loop/2-Wire Voice Grade Port (Centrex)Port Combo - Design		2	UEP91		33.45										
	2-Wire VG Loop/2-Wire Voice Grade Port (Centrex)Port Combo - Design		3	UEP91		44.92										
	UNE Loop Rate															
	2-Wire Voice Grade Loop (SL 1) - Zone 1		1	UEP91	UECS1	10.80										
	2-Wire Voice Grade Loop (SL 1) - Zone 2		2	UEP91	UECS1	12.47										
	2-Wire Voice Grade Loop (SL 1) - Zone 3		3	UEP91	UECS1	19.83										
	2-Wire Voice Grade Loop (SL 2) - Zone 1		1	UEP91	UECS2	16.84										
	2-Wire Voice Grade Loop (SL 2) - Zone 2		2	UEP91	UECS2	19.45										
	2-Wire Voice Grade Loop (SL 2) - Zone 3		3	UEP91	UECS2	30.92										
	UNE Ports															
	All States (Except North Carolina and Sout Carolina)															
	2-Wire Voice Grade Port (Centrex) Basic Local Area			UEP91	UEPYA	14.00	90.00	45.00	20.00	10.00			33.67	7.88		
	2-Wire Voice Grade Port (Centrex 800 termination)Basic Local Area			UEP91	UEPYB	14.00	90.00	45.00	20.00	10.00			33.67	7.88		
	2-Wire Voice Grade Port (Centrex with Caller ID)1Basic Local Area			UEP91	UEPYH	14.00	90.00	45.00	20.00	10.00			33.67	7.88		
	2-Wire Voice Grade Port (Centrex from diff Serving Wire Center)2 Basic Local Area			UEP91	UEPYM	14.00	90.00	45.00	20.00	10.00			33.67	7.88		
	2-Wire Voice Grade Port, Diff Serving Wire Center - 800 Service Term - Basic Local Area			UEP91	UEPYZ	14.00	90.00	45.00	20.00	10.00			33.67	7.88		
	2-Wire Voice Grade Port terminated in on Megalink or equivalent - Basic Local Area			UEP91	UEPY9	14.00	90.00	45.00	20.00	10.00			33.67	7.88		
	2-Wire Voice Grade Port Terminated on 800 Service Term - Basic Local Area			UEP91	UEPY2	14.00	90.00	45.00	20.00	10.00			33.67	7.88		
	Georgia and Florida Only															
	2-Wire Voice Grade Port (Centrex)			UEP91	UEPHA	14.00	90.00	45.00	20.00	10.00			33.67	7.88		
	2-Wire Voice Grade Port (Centrex 800 termination)			UEP91	UEPHB	14.00	90.00	45.00	20.00	10.00			33.67	7.88		
	2-Wire Voice Grade Port (Centrex with Caller ID)1			UEP91	UEPHH	14.00	90.00	45.00	20.00	10.00			33.67	7.88		
	2-Wire Voice Grade Port (Centrex from diff Serving Wire Center)2			UEP91	UEPHM	14.00	90.00	45.00	20.00	10.00			33.67	7.88		
	2-Wire Voice Grade Port, Diff Serving Wire Center - 800 Service Term			UEP91	UEPHZ	14.00	90.00	45.00	20.00	10.00			33.67	7.88		
	2-Wire Voice Grade Port terminated in on Megalink or equivalent			UEP91	UEPH9	14.00	90.00	45.00	20.00	10.00			33.67	7.88		
	2-Wire Voice Grade Port Terminated on 800 Service Term			UEP91	UEPH2	14.00	90.00	45.00	20.00	10.00			33.67	7.88		
	Local Switching															
	Centrex Intercom Funtionality, per port			UEP91	URECS	0.5554										

UNBUNDLED NETWORK ELEMENTS - Georgia

CATEGORY	RATE ELEMENTS	Interim	Zone	BCS	USOC	RATES ($)					Svc Order Submitted Elec per LSR	Svc Order Submitted Manually per LSR	Attachment: 2 Incremental Charge - Manual Svc Order vs. Electronic-1st	Attachment: 2 Incremental Charge - Manual Svc Order vs. Electronic-Add'l	Exhibit: B Incremental Charge - Manual Svc Order vs. Electronic-Disc 1st	Exhibit: B Incremental Charge - Manual Svc Order vs. Electronic-Disc Add'l
						Rec	Nonrecurring		Nonrecurring Disconnect		OSS Rates($)					
							First	Add'l	First	Add'l	SOMEC	SOMAN	SOMAN	SOMAN	SOMAN	SOMAN
Local Number Portability																
	Local Number Portability (1 per port)			UEP91	LNPCC	0.35										
Features																
	All Standard Features Offered, per port			UEP91	UEPVF	0.00										
	All Select Features Offered, per port			UEP91	UEPVS	0.00	454.69									
	All Centrex Control Features Offered, per port			UEP91	UEPVC	0.00										
NARS																
	Unbundled Network Access Register - Combination			UEP91	UARCX	0.00	0.00	0.00					33.67	7.88		
	Unbundled Network Access Register - Indial			UEP91	UAR1X	0.00	0.00	0.00					33.67	7.88		
	Unbundled Network Access Register - Outdial			UEP91	UAROX	0.00	0.00	0.00					33.67	7.88		
Miscellaneous Terminations																
2-Wire Trunk Side																
	Trunk Side Terminations, each			UEP91	CENA6	11.35	61.91	61.91					33.67	7.88		
Interoffice Channel Mileage - 2-Wire																
	Interoffice Channel Facilities Termination - Voice Grade			UEP91	M1GBC	17.07										
	Interoffice Channel mileage, per mile or fraction of mile			UEP91	M1GBM	0.0222										
Feature Activations (DS0) Centrex Loops on Channelized DS1 Service																
D4 Channel Bank Feature Activations																
	Feature Activation on D-4 Channel Bank Centrex Loop Slot			UEP91	1PQWS	0.62										
	Feature Activation on D-4 Channel Bank FX line Side Loop Slot			UEP91	1PQW6	0.62										
	Feature Activation on D-4 Channel Bank FX Trunk Side Loop Slot			UEP91	1PQW7	0.62										
	Feature Activation on D-4 Channel Bank Centrex Loop Slot - Different Wire Center			UEP91	1PQWP	0.62										
	Feature Activation on D-4 Channel Bank Private Line Loop Slot			UEP91	1PQWV	0.62										
	Feature Activation on D-4 Channel Bank Tjie Line/Trunk Loop Slot			UEP91	1PQWQ	0.62										
	Feature Activation on D-4 Channel Bank WATS Loop Slot			UEP91	1PQWA	0.62										
Non-Recurring Charges (NRC) Associated with UNE-P Centrex																
	Conversion - Currently Combined Switch-As-Is with allowed changes, per port			UEP91	USAC2		2.01	0.3108					33.67	7.88		
	New Centrex Standard Common Block			UEP91	M1ACS	0.00	659.41						33.67	7.88		
	New Centrex Customized Common Block			UEP91	M1ACC	0.00	659.41						33.67	7.88		
	Secondary Block, per Block			UEP91	M2CC1	0.00	77.10						33.67	7.88		
	NAR Establishment Charge, Per Occasion			UEP91	URECA	0.00	71.88						33.67	7.88		
UNE-P CENTREX - 5ESS (Valid in All States)																
2-Wire VG Loop/2-Wire Voice Grade Port (Centrex) Combo																
UNE Port/Loop Combination Rates (Non-Design)																
	2-Wire VG Loop/2-Wire Voice Grade Port (Centrex) Port Combo - Non-Design		1	UEP95		24.80										
	2-Wire VG Loop/2-Wire Voice Grade Port (Centrex)Port Combo - Non-Design		2	UEP95		26.47										
	2-Wire VG Loop/2-Wire Voice Grade Port (Centrex)Port Combo - Non-Design		3	UEP95		33.83										
UNE Port/Loop Combination Rates (Design)																
	2-Wire VG Loop/2-Wire Voice Grade Port (Centrex) Port Combo - Design		1	UEP95		30.84										
	2-Wire VG Loop/2-Wire Voice Grade Port (Centrex)Port Combo - Design		2	UEP95		33.45										
	2-Wire VG Loop/2-Wire Voice Grade Port (Centrex)Port Combo - Design		3	UEP95		44.92										
UNE Loop Rate																
	2-Wire Voice Grade Loop (SL 1) - Zone 1		1	UEP95	UECS1	10.80										
	2-Wire Voice Grade Loop (SL 1) - Zone 2		2	UEP95	UECS1	12.47										
	2-Wire Voice Grade Loop (SL 1) - Zone 3		3	UEP95	UECS1	19.83										
	2-Wire Voice Grade Loop (SL 2) - Zone 1		1	UEP95	UECS2	16.84										
	2-Wire Voice Grade Loop (SL 2) - Zone 2		2	UEP95	UECS2	19.45										

UNBUNDLED NETWORK ELEMENTS - Georgia														Attachment: 2		Exhibit: B	
CATEGORY	RATE ELEMENTS	Interim	Zone	BCS	USOC	RATES ($)					Svc Order Submitted Elec per LSR	Svc Order Submitted Manually per LSR	Incremental Charge - Manual Svc Order vs. Electronic-1st	Incremental Charge - Manual Svc Order vs. Electronic-Add'l	Incremental Charge - Manual Svc Order vs. Electronic-Disc 1st	Incremental Charge - Manual Svc Order vs. Electronic-Disc Add'l
						Rec	Nonrecurring		Nonrecurring Disconnect		OSS Rates($)					
							First	Add'l	First	Add'l	SOMEC	SOMAN	SOMAN	SOMAN	SOMAN	SOMAN
	2-Wire Voice Grade Loop (SL 2) - Zone 3		3	UEP95	UECS2	30.92										
UNE Port Rate																
All States																
	2-Wire Voice Grade Port (Centrex) Basic Local Area			UEP95	UEPYA	14.00	90.00	45.00	20.00	10.00			33.67	7.88		
	2-Wire Voice Grade Port (Centrex 800 termination)			UEP95	UEPYB	14.00	90.00	45.00	20.00	10.00			33.67	7.88		
	2-Wire Voice Grade Port (Centrex with Caller ID)1Basic Local Area			UEP95	UEPYH	14.00	90.00	45.00	20.00	10.00			33.67	7.88		
	2-Wire Voice Grade Port (Centrex from diff Serving Wire Center)2 Basic Local Area			UEP95	UEPYM	14.00	90.00	45.00	20.00	10.00			33.67	7.88		
	2-Wire Voice Grade Port, Diff Serving Wire Center - 800 Service Term - Basic Local Area			UEP95	UEPYZ	14.00	90.00	45.00	20.00	10.00			33.67	7.88		
	2-Wire Voice Grade Port terminated in on Megalink or equivalent - Basic Local Area			UEP95	UEPY9	14.00	90.00	45.00	20.00	10.00			33.67	7.88		
	2-Wire Voice Grade Port Terminated on 800 Service Term - Basic Local Area			UEP95	UEPY2	14.00	90.00	45.00	20.00	10.00			33.67	7.88		
FL & GA Only																
	2-Wire Voice Grade Port (Centrex)			UEP95	UEPHA	14.00	90.00	45.00	20.00	10.00			33.67	7.88		
	2-Wire Voice Grade Port (Centrex 800 termination)			UEP95	UEPHB	14.00	90.00	45.00	20.00	10.00			33.67	7.88		
	2-Wire Voice Grade Port (Centrex with Caller ID)1			UEP95	UEPHH	14.00	90.00	45.00	20.00	10.00			33.67	7.88		
	2-Wire Voice Grade Port (Centrex from diff Serving Wire Center)2			UEP95	UEPHM	14.00	90.00	45.00	20.00	10.00			33.67	7.88		
	2-Wire Voice Grade Port, Diff Serving Wire Center - 800 Service Term			UEP95	UEPHZ	14.00	90.00	45.00	20.00	10.00			33.67	7.88		
	2-Wire Voice Grade Port terminated in on Megalink or equivalent			UEP95	UEPH9	14.00	90.00	45.00	20.00	10.00			33.67	7.88		
	2-Wire Voice Grade Port Terminated on 800 Service Term			UEP95	UEPH2	14.00	90.00	45.00	20.00	10.00			33.67	7.88		
Local Switching																
	Centrex Intercom Funtionality, per port			UEP95	URECS	0.5554										
Local Number Portability																
	Local Number Portability (1 per port)			UEP95	LNPCC	0.35										
Features																
	All Standard Features Offered, per port			UEP95	UEPVF	0.00							33.67	7.88		
	All Select Features Offered, per port			UEP95	UEPVS	0.00	454.69						33.67	7.88		
	All Centrex Control Features Offered, per port			UEP95	UEPVC	0.00							33.67	7.88		
NARS																
	Unbundled Network Access Register - Combination			UEP95	UARCX	0.00	0.00	0.00					33.67	7.88		
	Unbundled Network Access Register - Indial			UEP95	UAR1X	0.00	0.00	0.00					33.67	7.88		
	Unbundled Network Access Register - Outdial			UEP95	UAROX	0.00	0.00	0.00					33.67	7.88		
Miscellaneous Terminations																
2-Wire Trunk Side																
	Trunk Side Terminations, each			UEP95	CEND6	11.35	61.91	61.91					33.67	7.88		
4-Wire Digital (1.544 Megabits)																
	DS1 Circuit Terminations, each			UEP95	M1HD1	120.80	89.44	52.46					33.67	7.88		
	DS0 Channels Activated, each			UEP95	M1HDO	0.00	28.71						33.67	7.88		
Interoffice Channel Mileage - 2-Wire																
	Interoffice Channel Facilities Termination			UEP95	M1GBC	17.07										
	Interoffice Channel mileage, per mile or fraction of mile			UEP95	M1GBM	0.0222										
Feature Activations (DS0) Centrex Loops on Channelized DS1 Service																
D4 Channel Bank Feature Activations																
	Feature Activation on D-4 Channel Bank Centrex Loop Slot			UEP95	1PQWS	0.62										
	Feature Activation on D-4 Channel Bank FX line Side Loop Slot			UEP95	1PQW6	0.62										
	Feature Activation on D-4 Channel Bank FX Trunk Side Loop Slot			UEP95	1PQW7	0.62										
	Feature Activation on D-4 Channel Bank Centrex Loop Slot - Different Wire Center			UEP95	1PQWP	0.62										
	Feature Activation on D-4 Channel Bank Private Line Loop Slot			UEP95	1PQWV	0.62										

CATEGORY	RATE ELEMENTS	Interim	Zone	BCS	USOC	RATES ($)					Svc Order Submitted Elec per LSR	Svc Order Submitted Manually per LSR	Attachment: 2 Incremental Charge - Manual Svc Order vs. Electronic-1st	Attachment: 2 Incremental Charge - Manual Svc Order vs. Electronic-Add'l	Exhibit: B Incremental Charge - Manual Svc Order vs. Electronic-Disc 1st	Exhibit: B Incremental Charge - Manual Svc Order vs. Electronic-Disc Add'l
						Rec	Nonrecurring		Nonrecurring Disconnect		OSS Rates($)					
							First	Add'l	First	Add'l	SOMEC	SOMAN	SOMAN	SOMAN	SOMAN	SOMAN
	Feature Activation on D-4 Channel Bank Tjie Line/Trunk Loop Slot			UEP95	1PQWQ	0.62										
	Feature Activation on D-4 Channel Bank WATS Loop Slot			UEP95	1PQWA	0.62										
Non-Recurring Charges (NRC) Associated with UNE-P Centrex																
	NRC Conversion Currently Combined Switch-As-Is with allowed changes, per port			UEP95	USAC2		2.01	0.3108					33.67	7.88		
	New Centrex Standard Common Block			UEP95	M1ACS	0.00	659.41						33.67	7.88		
	New Centrex Customized Common Block			UEP95	M1ACC	0.00	659.41						33.67	7.88		
	NAR Establishment Charge, Per Occasion			UEP95	URECA	0.00	71.88						33.67	7.88		
UNE-P CENTREX - DMS100 (Valid in All States)																
2-Wire VG Loop/2-Wire Voice Grade Port (Centrex) Combo																
UNE Port/Loop Combination Rates (Non-Design)																
	2-Wire VG Loop/2-Wire Voice Grade Port (Centrex) Port Combo - Non-Design		1	UEP9D		24.80										
	2-Wire VG Loop/2-Wire Voice Grade Port (Centrex)Port Combo - Non-Design		2	UEP9D		26.47										
	2-Wire VG Loop/2-Wire Voice Grade Port (Centrex)Port Combo - Non-Design		3	UEP9D		33.83										
UNE Port/Loop Combination Rates (Design)																
	2-Wire VG Loop/2-Wire Voice Grade Port (Centrex) Port Combo - Design		1	UEP9D		30.84										
	2-Wire VG Loop/2-Wire Voice Grade Port (Centrex)Port Combo - Design		2	UEP9D		33.45										
	2-Wire VG Loop/2-Wire Voice Grade Port (Centrex)Port Combo - Design		3	UEP9D		44.92										
UNE Loop Rate																
	2-Wire Voice Grade Loop (SL 1) - Zone 1		1	UEP9D	UECS1	10.80										
	2-Wire Voice Grade Loop (SL 1) - Zone 2		2	UEP9D	UECS1	12.47										
	2-Wire Voice Grade Loop (SL 1) - Zone 3		3	UEP9D	UECS1	19.83										
	2-Wire Voice Grade Loop (SL 2) - Zone 1		1	UEP9D	UECS2	16.84										
	2-Wire Voice Grade Loop (SL 2) - Zone 2		2	UEP9D	UECS2	19.45										
	2-Wire Voice Grade Loop (SL 2) - Zone 3		3	UEP9D	UECS2	30.92										
UNE Port Rate																
ALL STATES																
	2-Wire Voice Grade Port (Centrex) Basic Local Area			UEP9D	UEPYA	14.00	90.00	45.00	20.00	10.00			33.67	7.88		
	2-Wire Voice Grade Port (Centrex 800 termination)Basic Local Area			UEP9D	UEPYB	14.00	90.00	45.00	20.00	10.00			33.67	7.88		
	2-Wire Voice Grade Port (Centrex / EBS-PSET)3Basic Local Area			UEP9D	UEPYC	14.00	90.00	45.00	20.00	10.00			33.67	7.88		
	2-Wire Voice Grade Port (Centrex / EBS-M5009)3Basic Local Area			UEP9D	UEPYD	14.00	90.00	45.00	20.00	10.00			33.67	7.88		
	2-Wire Voice Grade Port (Centrex / EBS-M5209))3 Basic Local Area			UEP9D	UEPYE	14.00	90.00	45.00	20.00	10.00			33.67	7.88		
	2-Wire Voice Grade Port (Centrex / EBS-M5112))3 Basic Local Area			UEP9D	UEPYF	14.00	90.00	45.00	20.00	10.00			33.67	7.88		
	2-Wire Voice Grade Port (Centrex / EBS-M5312))3Basic Local Area			UEP9D	UEPYG	14.00	90.00	45.00	20.00	10.00			33.67	7.88		
	2-Wire Voice Grade Port (Centrex / EBS-M5008))3 Basic Local Area			UEP9D	UEPYT	14.00	90.00	45.00	20.00	10.00			33.67	7.88		
	2-Wire Voice Grade Port (Centrex / EBS-M5208))3 Basic Local Area			UEP9D	UEPYU	14.00	90.00	45.00	20.00	10.00			33.67	7.88		
	2-Wire Voice Grade Port (Centrex / EBS-M5216))3 Basic Local Area			UEP9D	UEPYV	14.00	90.00	45.00	20.00	10.00			33.67	7.88		
	2-Wire Voice Grade Port (Centrex / EBS-M5316))3 Basic Local Area			UEP9D	UEPY3	14.00	90.00	45.00	20.00	10.00			33.67	7.88		
	2-Wire Voice Grade Port (Centrex with Caller ID) Basic Local Area			UEP9D	UEPYH	14.00	90.00	45.00	20.00	10.00			33.67	7.88		
	2-Wire Voice Grade Port (Centrex/Caller ID/Msg Wtg Lamp Indication))3 Basic Local Area			UEP9D	UEPYW	14.00	90.00	45.00	20.00	10.00			33.67	7.88		

CATEGORY		RATE ELEMENTS	Interim	Zone	BCS	USOC	RATES ($)					Svc Order Submitted Elec per LSR	Svc Order Submitted Manually per LSR	Attachment: 2 Incremental Charge - Manual Svc Order vs. Electronic-1st	Attachment: 2 Incremental Charge - Manual Svc Order vs. Electronic-Add'l	Exhibit: B Incremental Charge - Manual Svc Order vs. Electronic-Disc 1st	Exhibit: B Incremental Charge - Manual Svc Order vs. Electronic-Disc Add'l
							Rec	Nonrecurring		Nonrecurring Disconnect		OSS Rates($)					
								First	Add'l	First	Add'l	SOMEC	SOMAN	SOMAN	SOMAN	SOMAN	SOMAN
		2-Wire Voice Grade Port (Centrex/Msg Wtg Lamp Indication))3 Basic Local Area			UEP9D	UEPYJ	14.00	90.00	45.00	20.00	10.00			33.67	7.88		
		2-Wire Voice Grade Port (Centrex from diff Serving Wire Center) 2 Basic Local Area			UEP9D	UEPYM	14.00	90.00	45.00	20.00	10.00			33.67	7.88		
		2-Wire Voice Grade Port (Centrex/differ SWC /EBS-PSET)2, 3 Basic Local Area			UEP9D	UEPYO	14.00	90.00	45.00	20.00	10.00			33.67	7.88		
		2-Wire Voice Grade Port (Centrex/differ SWC /EBS-M5009)2, 3 Basic Local Area			UEP9D	UEPYP	14.00	90.00	45.00	20.00	10.00			33.67	7.88		
		2-Wire Voice Grade Port (Centrex/differ SWC /EBS-5209)2, 3 Basic Local Area			UEP9D	UEPYQ	14.00	90.00	45.00	20.00	10.00			33.67	7.88		
		2-Wire Voice Grade Port (Centrex/differ SWC /EBS-M5112)2, 3 Basic Local Area			UEP9D	UEPYR	14.00	90.00	45.00	20.00	10.00			33.67	7.88		
		2-Wire Voice Grade Port (Centrex/differ SWC /EBS-M5312)2, 3 Basic Local Area			UEP9D	UEPYS	14.00	90.00	45.00	20.00	10.00			33.67	7.88		
		2-Wire Voice Grade Port (Centrex/differ SWC /EBS-M5008)2, 3 Basic Local Area			UEP9D	UEPY4	14.00	90.00	45.00	20.00	10.00			33.67	7.88		
		2-Wire Voice Grade Port (Centrex/differ SWC /EBS-M5208)2, 3 Basic Local Area			UEP9D	UEPY5	14.00	90.00	45.00	20.00	10.00			33.67	7.88		
		2-Wire Voice Grade Port (Centrex/differ SWC /EBS-M5216)2, 3 Basic Local Area			UEP9D	UEPY6	14.00	90.00	45.00	20.00	10.00			33.67	7.88		
		2-Wire Voice Grade Port (Centrex/differ SWC /EBS-M5316)2, 3 Basic Local Area			UEP9D	UEPY7	14.00	90.00	45.00	20.00	10.00			33.67	7.88		
		2-Wire Voice Grade Port, Diff Serving Wire Center - 800 Service Term			UEP9D	UEPYZ	14.00	90.00	45.00	20.00	10.00			33.67	7.88		
		2-Wire Voice Grade Port terminated in on Megalink or equivalent Basic Local Area			UEP9D	UEPY9	14.00	90.00	45.00	20.00	10.00			33.67	7.88		
		2-Wire Voice Grade Port Terminated on 800 Service Term Basic Local Area			UEP9D	UEPY2	14.00	90.00	45.00	20.00	10.00			33.67	7.88		
	FL & GA Only																
		2-Wire Voice Grade Port (Centrex)			UEP9D	UEPHA	14.00	90.00	45.00	20.00	10.00			33.67	7.88		
		2-Wire Voice Grade Port (Centrex 800 termination)			UEP9D	UEPHB	14.00	90.00	45.00	20.00	10.00			33.67	7.88		
		2-Wire Voice Grade Port (Centrex / EBS-PSET)3			UEP9D	UEPHC	14.00	90.00	45.00	20.00	10.00			33.67	7.88		
		2-Wire Voice Grade Port (Centrex / EBS-M5009)3			UEP9D	UEPHD	14.00	90.00	45.00	20.00	10.00			33.67	7.88		
		2-Wire Voice Grade Port (Centrex / EBS-M5209)3			UEP9D	UEPHE	14.00	90.00	45.00	20.00	10.00			33.67	7.88		
		2-Wire Voice Grade Port (Centrex / EBS-M5112)3			UEP9D	UEPHF	14.00	90.00	45.00	20.00	10.00			33.67	7.88		
		2-Wire Voice Grade Port (Centrex / EBS-M5312)3			UEP9D	UEPHG	14.00	90.00	45.00	20.00	10.00			33.67	7.88		
		2-Wire Voice Grade Port (Centrex / EBS-M5008)3			UEP9D	UEPHT	14.00	90.00	45.00	20.00	10.00			33.67	7.88		
		2-Wire Voice Grade Port (Centrex / EBS-M5208)3			UEP9D	UEPHU	14.00	90.00	45.00	20.00	10.00			33.67	7.88		
		2-Wire Voice Grade Port (Centrex / EBS-M5216)3			UEP9D	UEPHV	14.00	90.00	45.00	20.00	10.00			33.67	7.88		
		2-Wire Voice Grade Port (Centrex / EBS-M5316)3			UEP9D	UEPH3	14.00	90.00	45.00	20.00	10.00			33.67	7.88		
		2-Wire Voice Grade Port (Centrex with Caller ID)			UEP9D	UEPHH	14.00	90.00	45.00	20.00	10.00			33.67	7.88		
		2-Wire Voice Grade Port (Centrex/Caller ID/Msg Wtg Lamp Indication)3			UEP9D	UEPHW	14.00	90.00	45.00	20.00	10.00			33.67	7.88		
		2-Wire Voice Grade Port (Centrex/Msg Wtg Lamp Indication)3			UEP9D	UEPHJ	14.00	90.00	45.00	20.00	10.00			33.67	7.88		
		2-Wire Voice Grade Port (Centrex from diff Serving Wire Center) 2			UEP9D	UEPHM	14.00	90.00	45.00	20.00	10.00			33.67	7.88		
		2-Wire Voice Grade Port (Centrex/differ SWC /EBS-PSET)2, 3			UEP9D	UEPHO	14.00	90.00	45.00	20.00	10.00			33.67	7.88		
		2-Wire Voice Grade Port (Centrex/differ SWC /EBS-M5009)2, 3			UEP9D	UEPHP	14.00	90.00	45.00	20.00	10.00			33.67	7.88		
		2-Wire Voice Grade Port (Centrex/differ SWC /EBS-5209)2, 3			UEP9D	UEPHQ	14.00	90.00	45.00	20.00	10.00			33.67	7.88		
		2-Wire Voice Grade Port (Centrex/differ SWC /EBS-M5112)2, 3			UEP9D	UEPHR	14.00	90.00	45.00	20.00	10.00			33.67	7.88		
		2-Wire Voice Grade Port (Centrex/differ SWC /EBS-M5312)2, 3			UEP9D	UEPHS	14.00	90.00	45.00	20.00	10.00			33.67	7.88		
		2-Wire Voice Grade Port (Centrex/differ SWC /EBS-M5008)2, 3			UEP9D	UEPH4	14.00	90.00	45.00	20.00	10.00			33.67	7.88		
		2-Wire Voice Grade Port (Centrex/differ SWC /EBS-M5208)2, 3			UEP9D	UEPH5	14.00	90.00	45.00	20.00	10.00			33.67	7.88		

UNBUNDLED NETWORK ELEMENTS - Georgia														Attachment: 2		Exhibit: B	
CATEGORY	RATE ELEMENTS	Interim	Zone	BCS	USOC	RATES ($)					Svc Order Submitted Elec per LSR	Svc Order Submitted Manually per LSR	Incremental Charge - Manual Svc Order vs. Electronic-1st	Incremental Charge - Manual Svc Order vs. Electronic-Add'l	Incremental Charge - Manual Svc Order vs. Electronic-Disc 1st	Incremental Charge - Manual Svc Order vs. Electronic-Disc Add'l
						Rec	Nonrecurring		Nonrecurring Disconnect		OSS Rates($)					
							First	Add'l	First	Add'l	SOMEC	SOMAN	SOMAN	SOMAN	SOMAN	SOMAN
	2-Wire Voice Grade Port (Centrex/differ SWC /EBS-M5216)2, 3			UEP9D	UEPH6	14.00	90.00	45.00	20.00	10.00			33.67	7.88		
	2-Wire Voice Grade Port (Centrex/differ SWC /EBS-M5316)2, 3			UEP9D	UEPH7	14.00	90.00	45.00	20.00	10.00			33.67	7.88		
	2-Wire Voice Grade Port, Diff Serving Wire Center - 800 Service Term			UEP9D	UEPHZ	14.00	90.00	45.00	20.00	10.00			33.67	7.88		
	2-Wire Voice Grade Port terminated in on Megalink or equivalent			UEP9D	UEPH9	14.00	90.00	45.00	20.00	10.00			33.67	7.88		
	2-Wire Voice Grade Port Terminated on 800 Service Term			UEP9D	UEPH2	14.00	90.00	45.00	20.00	10.00			33.67	7.88		
Local Switching																
	Centrex Intercom Funtionality, per port			UEP9D	URECS	0.5554										
Local Number Portability																
	Local Number Portability (1 per port)			UEP9D	LNPCC	0.35										
Features																
	All Standard Features Offered, per port			UEP9D	UEPVF	0.00										
	All Select Features Offered, per port			UEP9D	UEPVS	0.00	454.69						33.67	7.88		
	All Centrex Control Features Offered, per port			UEP9D	UEPVC	0.00										
NARS																
	Unbundled Network Access Register - Combination			UEP9D	UARCX	0.00	0.00	0.00					33.67	7.88		
	Unbundled Network Access Register - Inward			UEP9D	UAR1X	0.00	0.00	0.00					33.67	7.88		
	Unbundled Network Access Register - Outdial			UEP9D	UAROX	0.00	0.00	0.00					33.67	7.88		
Miscellaneous Terminations																
2-Wire Trunk Side																
	Trunk Side Terminations, each			UEP9D	CEND6	11.35										
4-Wire Digital (1.544 Megabits)																
	DS1 Circuit Terminations, each			UEP9D	M1HD1	120.80	89.44	52.46					33.67	7.88		
	DS0 Channels Activiated per Channel			UEP9D	M1HDO	0.00	28.71						33.67	7.88		
Interoffice Channel Mileage - 2-Wire																
	Interoffice Channel Facilities Termination			UEP9D	M1GBC	17.07										
	Interoffice Channel mileage, per mile or fraction of mile			UEP9D	M1GBM	0.0222										
Feature Activations (DS0) Centrex Loops on Channelized DS1 Service																
D4 Channel Bank Feature Activations																
	Feature Activation on D-4 Channel Bank Centrex Loop Slot			UEP9D	1PQWS	0.62										
	Feature Activation on D-4 Channel Bank FX line Side Loop Slot			UEP9D	1PQW6	0.62										
	Feature Activation on D-4 Channel Bank FX Trunk Side Loop Slot			UEP9D	1PQW7	0.62										
	Feature Activation on D-4 Channel Bank Centrex Loop Slot - Different Wire Center			UEP9D	1PQWP	0.62										
	Feature Activation on D-4 Channel Bank Private Line Loop Slot			UEP9D	1PQWV	0.62										
	Feature Activation on D-4 Channel Bank Tjie Line/Trunk Loop Slot			UEP9D	1PQWQ	0.62										
	Feature Activation on D-4 Channel Bank WATS Loop Slot			UEP9D	1PQWA	0.62										
Non-Recurring Charges (NRC) Associated with UNE-P Centrex																
	NRC Conversion Currently Combined Switch-As-Is with allowed changes, per port			UEP9D	USAC2		2.01	0.3108					33.67	7.88		
	New Centrex Standard Common Block			UEP9D	M1ACS	0.00	659.41						33.67	7.88		
	New Centrex Customized Common Block			UEP9D	M1ACC	0.00	659.41						33.67	7.88		
	NAR Establishment Charge, Per Occasion			UEP9D	URECA	0.00	71.88						33.67	7.88		
Note 1 - Required Port for Centrex Control in 1AESS, 5ESS & EWSD																
Note 2 - Requres Interoffice Channel Mileage																
Note 3 - Requires Specific Customer Premises Equipment																
Note: Rates displaying an "R" in Interim column are interim and subject to rate true-up as set forth in General Terms and Conditions.																

UNBUNDLED NETWORK ELEMENTS - Kentucky													Attachment: 2		Exhibit: B	
CATEGORY	RATE ELEMENTS	Interim	Zone	BCS	USOC	RATES ($)					Svc Order Submitted Elec per LSR	Svc Order Submitted Manually per LSR	Incremental Charge - Manual Svc Order vs. Electronic-1st	Incremental Charge - Manual Svc Order vs. Electronic-Add'l	Incremental Charge - Manual Svc Order vs. Electronic-Disc 1st	Incremental Charge - Manual Svc Order vs. Electronic-Disc Add'l
						Rec	Nonrecurring		Nonrecurring Disconnect		OSS Rates($)					
							First	Add'l	First	Add'l	SOMEC	SOMAN	SOMAN	SOMAN	SOMAN	SOMAN
	The "Zone" shown in the sections for stand-alone loops or loops as part of a combination refers to Geographically Deaveraged UNE Zones. To view Geographically Deaveraged UNE Zone Designations by Central Office, refer to internet Website: http://www.interconnection.bellsouth.com/become_a_clec/html/interconnection.htm															
OPERATIONAL SUPPORT SYSTEMS																
	NOTE: (1) Electronic Service Order: CLEC should contact its contract negotiator if it prefers the state specific electronic service ordering charges as ordered by the State Commissions. The electronic service ordering charge currently contained in this rate exhibit is the BellSouth regional electronic service ordering charge. CLEC may elect either the state specific Commission ordered rates for the electronic service ordering charges, or CLEC may elect the regional electronic service ordering charge.															
	NOTE: (2) Any element that can be ordered electronically will be billed according to the SOMEC rate listed in this category. Please refer to BellSouth's Business Rules for Local Ordering (BBR-LO) to determine if a product can be ordered electronically. For those elements that cannot be ordered electronically at present per the BBR-LO, the listed SOMEC rate in this category reflects the charge that would be billed to a CLEC once electronic ordering capabilities come on-line for that element. Otherwise, the manual ordering charge, SOMAN, will be applied to a CLECs bill when it submits an LSR to BellSouth.															
	Manual Service Order Charge, per LSR, Disconnect Only (KY)				SOMAN				0.99							
	Electronic OSS Charge, per LSR, submitted via BST's OSS interactive interfaces (Regional)				SOMEC		3.50									
UNE SERVICE DATE ADVANCEMENT CHARGE																
	NOTE: The Expedite charge will be maintained commensurate with BellSouth's FCC No.1 Tariff, Section 5 as applicable.															
	UNE Expedite Charge per Circuit or Line Assignable USOC, per Day			UAL, UEANL, UCL, UEF, UDF, UEQ, UDL, UENTW, UDN, UEA, UHL, ULC, USL, U1T12, U1T48, U1TD1, U1TD3, U1TDX, U1TO3, U1TS1, U1TVX, UC1BC, UC1BL, UC1CC, UC1CL, UC1DC, UC1DL, UC1EC, UC1EL, UC1FC, UC1FL, UC1GC, UC1GL, UC1HC, UC1HL, UDL12, UDL48, UDLO3, UDLSX, UE3, ULD12, ULD48, ULDD1, ULDD3, ULDDX, ULDO3, ULDS1, ULDVX, UNC1X, UNC3X, UNCDX, UNCNX, UNCSX, UNCVX, UNLD1, UNLD3, UXTD1, UXTD3, UXTS1, U1TUC, U1TUD, U1TUB, U1TUA	SDASP		200.00									
UNBUNDLED EXCHANGE ACCESS LOOP																
	2-WIRE ANALOG VOICE GRADE LOOP															
	2-Wire Analog Voice Grade Loop - Service Level 1- Zone 1		1	UEANL	UEAL2	10.56	46.66	22.57	26.65	7.65		7.86				
	2-Wire Analog Voice Grade Loop - Service Level 1- Zone 2		2	UEANL	UEAL2	15.34	46.66	22.57	26.65	7.65		7.86				
	2-Wire Analog Voice Grade Loop - Service Level 1- Zone 3		3	UEANL	UEAL2	31.11	46.66	22.57	26.65	7.65		7.86				
	Unbundled Miscellaneous Rate Element, Tag Loop at End User Premise			UEANL	URETL		8.33	0.83				7.86				
	Loop Testing - Basic 1st Half Hour			UEANL	URET1		46.88	46.88				7.86				
	Loop Testing - Basic Additional Half Hour			UEANL	URETA		24.16	24.16				7.86				
	CLEC to CLEC Conversion Charge Without Outside Dispatch (UVL-SL1)			UEANL	UREWO		15.78	8.94				7.86				
	Unbundled Voice Loop, Non-Design Voice Loop, billing for BST providing make-up (Engineering Information - E.I.)			UEANL	UEANM		13.49	13.49								
	Manual Order Coordination for UVL-SL1s (per loop)			UEANL	UEAMC		9.00	9.00								

UNBUNDLED NETWORK ELEMENTS - Kentucky													Attachment: 2		Exhibit: B	
CATEGORY	RATE ELEMENTS	Interim	Zone	BCS	USOC	RATES ($)					Svc Order Submitted Elec per LSR	Svc Order Submitted Manually per LSR	Incremental Charge - Manual Svc Order vs. Electronic-1st	Incremental Charge - Manual Svc Order vs. Electronic-Add'l	Incremental Charge - Manual Svc Order vs. Electronic-Disc 1st	Incremental Charge - Manual Svc Order vs. Electronic-Disc Add'l
						Rec	Nonrecurring		Nonrecurring Disconnect		OSS Rates($)					
							First	Add'l	First	Add'l	SOMEC	SOMAN	SOMAN	SOMAN	SOMAN	SOMAN
	Order Coordination for Specified Conversion Time for UVL-SL1 (per LSR)			UEANL	OCOSL		23.01	23.01								
2-WIRE Unbundled COPPER LOOP																
	2-Wire Unbundled Copper Loop - Non-Designed Zone 1	I	1	UEQ	UEQ2X	10.58	44.97	20.89	25.64	6.65		7.86				
	2 Wire Unbundled Copper Loop - Non-Designed - Zone 2	I	2	UEQ	UEQ2X	11.51	44.97	20.89	25.64	6.65		7.86				
	2 Wire Unbundled Copper Loop - Non-Designed - Zone 3	I	3	UEQ	UEQ2X	13.19	44.97	20.89	25.64	6.65		7.86				
	Unbundled Miscellaneous Rate Element, Tag Loop at End User Premise			UEQ	URETL		8.33	0.83				7.86				
	Order Coordination 2 Wire Unbundled Copper Loop - Non-Designed (per loop)			UEQ	USBMC		9.00	9.00								
	Unbundled Copper Loop, Non-Design Copper Loop, billing for BST providing make-up (Engineering Information - E.I.)			UEQ	UEQMU		13.49	13.49								
	Loop Testing - Basic 1st Half Hour			UEQ	URET1		46.88	46.88				7.86				
	Loop Testing - Basic Additional Half Hour			UEQ	URETA		24.16	24.16				7.86				
	CLEC to CLEC Conversion Charge Without Outside Dispatch (UCL-ND)			UEQ	UREWO		14.27	7.43				7.86				
UNBUNDLED EXCHANGE ACCESS LOOP																
2-WIRE ANALOG VOICE GRADE LOOP																
	2 Wire Analog Voice Grade Loop-Service Level 1-Line Splitting-Zone 1		1	UEPSR UEPSB	UEALS	10.56	46.66	22.57	26.65	7.65		7.86				
	2 Wire Analog Voice Grade Loop-Service Level 1-Line Splitting-Zone 1		1	UEPSR UEPSB	UEABS	10.56	46.66	22.57	26.65	7.65		7.86				
	2 Wire Analog Voice Grade Loop- Service Level 1-Line Splitting-Zone 2		2	UEPSR UEPSB	UEALS	15.34	46.66	22.57	26.65	7.65		7.86				
	2 Wire Analog Voice Grade Loop- Service Level 1-Line Splitting-Zone 2		2	UEPSR UEPSB	UEABS	15.34	46.66	22.57	26.65	7.65		7.86				
	2 Wire Analog Voice Grade Loop-Service Level 1-Line Splitting-Zone 3		3	UEPSR UEPSB	UEALS	31.11	46.66	22.57	26.65	7.65		7.86				
	2 Wire Analog Voice Grade Loop-Service Level 1-Line Splitting-Zone 3		3	UEPSR UEPSB	UEABS	31.11	46.66	22.57	26.65	7.65		7.86				
UNBUNDLED EXCHANGE ACCESS LOOP																
2-WIRE ANALOG VOICE GRADE LOOP																
	2-Wire Analog Voice Grade Loop - Service Level 2 w/Loop or Ground Start Signaling - Zone 1		1	UEA	UEAL2	12.67	134.89	81.87	73.65	14.88		7.86				
	2-Wire Analog Voice Grade Loop - Service Level 2 w/Loop or Ground Start Signaling - Zone 2		2	UEA	UEAL2	17.45	134.89	81.87	73.65	14.88		7.86				
	2-Wire Analog Voice Grade Loop - Service Level 2 w/Loop or Ground Start Signaling - Zone 3		3	UEA	UEAL2	33.22	134.89	81.87	73.65	14.88		7.86				
	Order Coordination for Specified Conversion Time (per LSR)			UEA	OCOSL		23.01									
	2-Wire Analog Voice Grade Loop - Service Level 2 w/Reverse Battery Signaling - Zone 1		1	UEA	UEAR2	12.67	134.89	81.87	73.65	14.88		7.86				
	2-Wire Analog Voice Grade Loop - Service Level 2 w/Reverse Battery Signaling - Zone 2		2	UEA	UEAR2	17.45	134.89	81.87	73.65	14.88		7.86				
	2-Wire Analog Voice Grade Loop - Service Level 2 w/Reverse Battery Signaling - Zone 3		3	UEA	UEAR2	33.22	134.89	81.87	73.65	14.88		7.86				
	Order Coordination for Specified Conversion Time (per LSR)			UEA	OCOSL		23.01									
	CLEC to CLEC Conversion Charge without outside dispatch			UEA	UREWO		87.72	36.36				7.86				
	Loop Tagging - Service Level 2 (SL2)			UEA	URETL		11.21	1.10				7.86				
4-WIRE ANALOG VOICE GRADE LOOP																
	4-Wire Analog Voice Grade Loop - Zone 1		1	UEA	UEAL4	29.26	164.11	112.36	78.91	18.66		7.86				
	4-Wire Analog Voice Grade Loop - Zone 2		2	UEA	UEAL4	34.25	164.11	112.36	78.91	18.66		7.86				
	4-Wire Analog Voice Grade Loop - Zone 3		3	UEA	UEAL4	85.06	164.11	112.36	78.91	18.66		7.86				
	Order Coordination for Specified Conversion Time (per LSR)			UEA	OCOSL		23.01									
	CLEC to CLEC Conversion Charge without outside dispatch			UEA	UREWO		87.72	36.36				7.86				
2-WIRE ISDN DIGITAL GRADE LOOP																
	2-Wire ISDN Digital Grade Loop - Zone 1		1	UDN	U1L2X	18.44	146.77	95.02	71.38	13.83		7.86				
	2-Wire ISDN Digital Grade Loop - Zone 2		2	UDN	U1L2X	25.08	146.77	95.02	71.38	13.83		7.86				
	2-Wire ISDN Digital Grade Loop - Zone 3		3	UDN	U1L2X	42.87	146.77	95.02	71.38	13.83		7.86				
	Order Coordination For Specified Conversion Time (per LSR)			UDN	OCOSL		23.01									

UNBUNDLED NETWORK ELEMENTS - Kentucky														Attachment: 2		Exhibit: B	
CATEGORY	RATE ELEMENTS	Interim	Zone	BCS	USOC	RATES ($)					Svc Order Submitted Elec per LSR	Svc Order Submitted Manually per LSR	Incremental Charge - Manual Svc Order vs. Electronic-1st	Incremental Charge - Manual Svc Order vs. Electronic-Add'l	Incremental Charge - Manual Svc Order vs. Electronic-Disc 1st	Incremental Charge - Manual Svc Order vs. Electronic-Disc Add'l
						Rec	Nonrecurring		Nonrecurring Disconnect		OSS Rates($)					
							First	Add'l	First	Add'l	SOMEC	SOMAN	SOMAN	SOMAN	SOMAN	SOMAN
	CLEC to CLEC Conversion Charge without outside dispatch			UDN	UREWO		91.63	44.16				7.86				
2-WIRE Universal Digital Channel (UDC) COMPATIBLE LOOP																
	2-Wire Universal Digital Channel (UDC) Compatible Loop - Zone 1		1	UDC	UDC2X	18.44	146.77	95.02	71.38	13.83		7.86				
	2-Wire Universal Digital Channel (UDC) Compatible Loop - Zone 2		2	UDC	UDC2X	25.08	146.77	95.02	71.38	13.83		7.86				
	2-Wire Universal Digital Channel (UDC) Compatible Loop - Zone 3		3	UDC	UDC2X	42.87	146.77	95.02	71.38	13.83		7.86				
	CLEC to CLEC Conversion Charge without outside dispatch			UDC	UREWO		91.63	44.16				7.86				
2-WIRE ASYMMETRICAL DIGITAL SUBSCRIBER LINE (ADSL) COMPATIBLE LOOP																
	2 Wire Unbundled ADSL Loop including manual service inquiry & facility reservation - Zone 1		1	UAL	UAL2X	10.82	141.98	79.73	69.02	11.47		7.86				
	2 Wire Unbundled ADSL Loop including manual service inquiry & facility reservation - Zone 2		2	UAL	UAL2X	11.79	141.98	79.73	69.02	11.47		7.86				
	2 Wire Unbundled ADSL Loop including manual service inquiry & facility reservation - Zone 3		3	UAL	UAL2X	12.87	141.98	79.73	69.02	11.47		7.86				
	Order Coordination for Specified Conversion Time (per LSR)			UAL	OCOSL		23.01									
	2 Wire Unbundled ADSL Loop without manual service inquiry & facility reservaton - Zone 1		1	UAL	UAL2W	10.82	121.18	69.00	69.09	11.54		7.86				
	2 Wire Unbundled ADSL Loop without manual service inquiry & facility reservaton - Zone 2		2	UAL	UAL2W	11.79	121.18	69.00	69.09	11.54		7.86				
	2 Wire Unbundled ADSL Loop without manual service inquiry & facility reservaton - Zone 3		3	UAL	UAL2W	12.87	121.18	69.00	69.09	11.54		7.86				
	Order Coordination for Specified Conversion Time (per LSR)			UAL	OCOSL		23.01									
	CLEC to CLEC Conversion Charge without outside dispatch			UAL	UREWO		86.20	40.40				7.86				
2-WIRE HIGH BIT RATE DIGITAL SUBSCRIBER LINE (HDSL) COMPATIBLE LOOP																
	2 Wire Unbundled HDSL Loop including manual service inquiry & facility reservation - Zone 1		1	UHL	UHL2X	8.75	151.54	89.29	69.09	11.54		7.86				
	2 Wire Unbundled HDSL Loop including manual service inquiry & facility reservation - Zone 2		2	UHL	UHL2X	9.56	151.54	89.29	69.09	11.54		7.86				
	2 Wire Unbundled HDSL Loop including manual service inquiry & facility reservation - Zone 3		3	UHL	UHL2X	10.61	151.54	89.29	69.09	11.54		7.86				
	Order Coordination for Specified Conversion Time (per LSR)			UHL	OCOSL		23.01									
	2 Wire Unbundled HDSL Loop without manual service inquiry and facility reservation - Zone 1		1	UHL	UHL2W	8.75	130.74	78.56	69.09	11.54		7.86				
	2 Wire Unbundled HDSL Loop without manual service inquiry and facility reservation - Zone 2		2	UHL	UHL2W	9.56	130.74	78.56	69.09	11.54		7.86				
	2 Wire Unbundled HDSL Loop without manual service inquiry and facility reservation - Zone 3		3	UHL	UHL2W	10.61	130.74	78.56	69.09	11.54		7.86				
	Order Coordination for Specified Conversion Time (per LSR)			UHL	OCOSL		23.01									
	CLEC to CLEC Conversion Charge without outside dispatch			UHL	UREWO		86.14	40.40				7.86				
4-WIRE HIGH BIT RATE DIGITAL SUBSCRIBER LINE (HDSL) COMPATIBLE LOOP																
	4 Wire Unbundled HDSL Loop including manual service inquiry and facility reservation - Zone 1		1	UHL	UHL4X	13.95	185.75	123.50	74.95	14.69		7.86				
	4-Wire Unbundled HDSL Loop including manual service inquiry and facility reservation - Zone 2	I	2	UHL	UHL4X	15.68	185.75	123.50	74.95	14.69		7.86				
	4-Wire Unbundled HDSL Loop including manual service inquiry and facility reservation - Zone 3		3	UHL	UHL4X	16.98	185.75	123.50	74.95	14.69		7.86				
	Order Coordination for Specified Conversion Time (per LSR)			UHL	OCOSL		23.01									
	4-Wire Unbundled HDSL Loop without manual service inquiry and facility reservation - Zone 1		1	UHL	UHL4W	13.95	164.95	114.04	77.32	15.80		7.86				
	4-Wire Unbundled HDSL Loop without manual service inquiry and facility reservation - Zone 2		2	UHL	UHL4W	15.68	164.95	114.04	77.32	15.80		7.86				
	4-Wire Unbundled HDSL Loop without manual service inquiry and facility reservation - Zone 3		3	UHL	UHL4W	16.98	164.95	114.04	77.32	15.80		7.86				
	Order Coordination for Specified Conversion Time (per LSR)			UHL	OCOSL		23.01									
	CLEC to CLEC Conversion Charge without outside dispatch			UHL	UREWO		86.14	40.40				7.86				
4-WIRE DS1 DIGITAL LOOP																
	4-Wire DS1 Digital Loop - Zone 1		1	USL	USLXX	86.47	306.69	174.44	65.83	14.55		7.86				

UNBUNDLED NETWORK ELEMENTS - Kentucky														Attachment: 2		Exhibit: B	
CATEGORY	RATE ELEMENTS	Interim	Zone	BCS	USOC	RATES ($)					Svc Order Submitted Elec per LSR	Svc Order Submitted Manually per LSR	Incremental Charge - Manual Svc Order vs. Electronic-1st	Incremental Charge - Manual Svc Order vs. Electronic-Add'l	Incremental Charge - Manual Svc Order vs. Electronic-Disc 1st	Incremental Charge - Manual Svc Order vs. Electronic-Disc Add'l
						Rec	Nonrecurring		Nonrecurring Disconnect		OSS Rates($)					
							First	Add'l	First	Add'l	SOMEC	SOMAN	SOMAN	SOMAN	SOMAN	SOMAN
	4-Wire DS1 Digital Loop - Zone 2		2	USL	USLXX	114.10	306.69	174.44	65.83	14.55		7.86				
	4-Wire DS1 Digital Loop - Zone 3		3	USL	USLXX	297.76	306.69	174.44	65.83	14.55		7.86				
	Order Coordination for Specified Conversion Time (per LSR)			USL	OCOSL		23.01									
	CLEC to CLEC Conversion Charge without outside dispatch			USL	UREWO		101.09	43.04								
4-WIRE 19.2, 56 OR 64 KBPS DIGITAL GRADE LOOP																
	4 Wire Unbundled Digital 19.2 Kbps		1	UDL	UDL19	27.59	157.81	106.06	78.91	18.66		7.86				
	4 Wire Unbundled Digital 19.2 Kbps		2	UDL	UDL19	32.48	157.81	106.06	78.91	18.66		7.86				
	4 Wire Unbundled Digital 19.2 Kbps		3	UDL	UDL19	36.37	157.81	106.06	78.91	18.66		7.86				
	4 Wire Unbundled Digital Loop 56 Kbps - Zone 1		1	UDL	UDL56	27.59	157.81	106.06	78.91	18.66		7.86				
	4 Wire Unbundled Digital Loop 56 Kbps - Zone 2		2	UDL	UDL56	32.48	157.81	106.06	78.91	18.66		7.86				
	4 Wire Unbundled Digital Loop 56 Kbps - Zone 3		3	UDL	UDL56	36.37	157.81	106.06	78.91	18.66		7.86				
	Order Coordination for Specified Conversion Time (per LSR)			UDL	OCOSL		23.01									
	4 Wire Unbundled Digital Loop 64 Kbps - Zone 1		1	UDL	UDL64	27.59	157.81	106.06	78.91	18.66		7.86				
	4 Wire Unbundled Digital Loop 64 Kbps - Zone 2		2	UDL	UDL64	32.48	157.81	106.06	78.91	18.66		7.86				
	4 Wire Unbundled Digital Loop 64 Kbps - Zone 3		3	UDL	UDL64	36.37	157.81	106.06	78.91	18.66		7.86				
	Order Coordination for Specified Conversion Time (per LSR)			UDL	OCOSL		23.01									
	CLEC to CLEC Conversion Charge without outside dispatch			UDL	UREWO		102.13	49.75				7.86				
2-WIRE Unbundled COPPER LOOP																
	2-Wire Unbundled Copper Loop/Short including manual service inquiry & facility reservation - Zone 1		1	UCL	UCLPB	10.82	140.95	78.70	69.09	11.54		7.86				
	2-Wire Unbundled Copper Loop/Short including manual service inquiry & facility reservation - Zone 2		2	UCL	UCLPB	11.79	140.95	78.70	69.09	11.54		7.86				
	2 Wire Unbundled Copper Loop/Short including manual service inquiry & facility reservation - Zone 3		3	UCL	UCLPB	12.87	140.95	78.70	69.09	11.54		7.86				
	Order Coordination for Unbundled Copper Loops (per loop)			UCL	UCLMC		9.00	9.00								
	2-Wire Unbundled Copper Loop/Short without manual service inquiry and facility reservation - Zone 1		1	UCL	UCLPW	10.82	120.15	67.97	69.09	11.54		7.86				
	2-Wire Unbundled Copper Loop/Short without manual service inquiry and facility reservation - Zone 2		2	UCL	UCLPW	11.79	120.15	67.97	69.09	11.54		7.86				
	2-Wire Unbundled Copper Loop/Short without manual service inquiry and facility reservation - Zone 3		3	UCL	UCLPW	12.87	120.15	67.97	69.09	11.54		7.86				
	Order Coordination for Unbundled Copper Loops (per loop)			UCL	UCLMC		9.00	9.00								
	2-Wire Unbundled Copper Loop/Long - includes manual srvc. inquiry and facility reservation - Zone 1		1	UCL	UCL2L	24.91	140.95	78.70	69.09	11.54		7.86				
	2-Wire Unbundled Copper Loop/Long - includes manual svc. inquiry and facility reservation - Zone 2		2	UCL	UCL2L	36.94	140.95	78.70	69.09	11.54		7.86				
	2-Wire Unbundled Copper Loop/Long - includes manual svc. inquiry and facility reservation - Zone 3		3	UCL	UCL2L	69.95	140.95	78.70	69.09	11.54		7.86				
	Order Coordination for Unbundled Copper Loops (per loop)			UCL	UCLMC		9.00	9.00								
	2-Wire Unbundled Copper Loop/Long - without manual service inquiry and facility reservation - Zone 1		1	UCL	UCL2W	24.91	120.15	67.97	69.09	11.54		7.86				
	2-Wire Unbundled Copper Loop/Long - without manual service inquiry and facility reservation - Zone 2		2	UCL	UCL2W	36.94	120.15	67.97	69.09	11.54		7.86				
	2-Wire Unbundled Copper Loop/Long - without manual service inquiry and facility reservation - Zone 3		3	UCL	UCL2W	69.95	120.15	67.97	69.09	11.54		7.86				
	Order Coordination for Unbundled Copper Loops (per loop)			UCL	UCLMC		9.00	9.00								
	CLEC to CLEC Conversion Charge without outside dispatch (UCL-Des)			UCL	UREWO		97.23	42.48				7.86				
4-WIRE COPPER LOOP																
	4-Wire Copper Loop/Short - including manual service inquiry and facility reservation - Zone 1		1	UCL	UCL4S	16.92	170.31	108.06	74.95	14.69		7.86				
	4-Wire Copper Loop/Short - including manual service inquiry and facility reservation - Zone 2		2	UCL	UCL4S	17.36	170.31	108.06	74.95	14.69		7.86				
	4-Wire Copper Loop/Short - including manual service inquiry and facility reservation - Zone 3		3	UCL	UCL4S	28.10	170.31	108.06	74.95	14.69		7.86				
	Order Coordination for Unbundled Copper Loops (per loop)			UCL	UCLMC		9.00	9.00								
	4-Wire Copper Loop/Short - without manual service inquiry and facility reservation - Zone 1		1	UCL	UCL4W	16.92	149.52	97.33	74.95	14.69		7.86				

UNBUNDLED NETWORK ELEMENTS - Kentucky														Attachment: 2		Exhibit: B	
CATEGORY		RATE ELEMENTS	Interim	Zone	BCS	USOC	RATES ($)					Svc Order Submitted Elec per LSR	Svc Order Submitted Manually per LSR	Incremental Charge - Manual Svc Order vs. Electronic-1st	Incremental Charge - Manual Svc Order vs. Electronic-Add'l	Incremental Charge - Manual Svc Order vs. Electronic-Disc 1st	Incremental Charge - Manual Svc Order vs. Electronic-Disc Add'l
							Rec	Nonrecurring		Nonrecurring Disconnect		OSS Rates($)					
								First	Add'l	First	Add'l	SOMEC	SOMAN	SOMAN	SOMAN	SOMAN	SOMAN
		4-Wire Copper Loop/Short - without manual service inquiry and facility reservation - Zone 2		2	UCL	UCL4W	17.36	149.52	97.33	74.95	14.69		7.86				
		4-Wire Copper Loop/Short - without manual service inquiry and facility reservation - Zone 3		3	UCL	UCL4W	28.10	149.52	97.33	74.95	14.69		7.86				
		Order Coordination for Unbundled Copper Loops (per loop)			UCL	UCLMC		9.00	9.00								
		4-Wire Unbundled Copper Loop/Long - includes manual svc. inquiry and facility reservation - Zone 1		1	UCL	UCL4L	46.91	170.31	108.06	74.95	14.69		7.86				
		4-Wire Unbundled Copper Loop/Long - includes manual svc. inquiry and facility reservation - Zone 2		2	UCL	UCL4L	45.78	170.31	108.06	74.95	14.69		7.86				
		4-Wire Unbundled Copper Loop/Long - includes manual svc. inquiry and facility reservation - Zone 3		3	UCL	UCL4L	171.34	170.31	108.06	74.95	14.69		7.86				
		Order Coordination for Unbundled Copper Loops (per loop)			UCL	UCLMC		9.00	9.00								
		4-Wire Unbundled Copper Loop/Long - without manual svc. inquiry and facility reservation - Zone 1		1	UCL	UCL4O	46.91	149.52	97.33	74.95	14.69		7.86				
		4-Wire Unbundled Copper Loop/Long - without manual svc. inquiry and facility reservation - Zone 2		2	UCL	UCL4O	45.78	149.52	97.33	74.95	14.69		7.86				
		4-Wire Unbundled Copper Loop/Long - without manual svc. inquiry and facility reservation - Zone 3		3	UCL	UCL4O	171.34	149.52	97.33	74.95	14.69		7.86				
		Order Coordination for Unbundled Copper Loops (per loop)			UCL	UCLMC		9.00	9.00								
		CLEC to CLEC Conversion Charge without outside dispatch (UCL-Des)			UCL	UREWO		97.23	42.48				7.86				
LOOP MODIFICATION																	
		Unbundled Loop Modification, Removal of Load Coils - 2 Wire pair less than or equal to 18k ft			UAL, UHL, UCL, UEQ, ULS, UEA, UEANL, UEPSR, UEPSB	ULM2L		9.24	9.24				7.86				
		Unbundled Loop Modification, Removal of Load Coils - 2 wire greater than 18k ft			UCL, ULS, UEQ	ULM2G		342.24	342.24				7.86				
		Unbundled Loop Modification Removal of Load Coils - 4 Wire less than or equal to 18K ft			UHL, UCL, UEA	ULM4L		9.24	9.24				7.86				
		Unbundled Loop Modification Removal of Load Coils - 4 Wire pair greater than 18k ft			UCL	ULM4G		342.24	342.24				7.86				
		Unbundled Loop Modification Removal of Bridged Tap Removal, per unbundled loop			UAL, UHL, UCL, UEQ, ULS, UEA, UEANL, UEPSR, UEPSB	ULMBT		10.47	10.47				7.86				
SUB-LOOPS																	
	Sub-Loop Distribution																
		Sub-Loop - Per Cross Box Location - CLEC Feeder Facility Set-Up	I		UEANL	USBSA		207.91	207.91				7.86				
		Sub-Loop - Per Cross Box Location - Per 25 Pair Panel Set-Up	I		UEANL	USBSB		12.50	12.50				7.86				
		Sub-Loop - Per Building Equipment Room - CLEC Feeder Facility Set-Up	I		UEANL	USBSC		80.87	80.87				7.86				
		Sub-Loop - Per Building Equipment Room - Per 25 Pair Panel Set-Up	I		UEANL	USBSD		45.04	45.04				7.86				
		Sub-Loop Distribution Per 2-Wire Analog Voice Grade Loop - Zone 1	I	1	UEANL	USBN2	6.34	85.03	39.05	59.81	7.90		7.86				
		Sub-Loop Distribution Per 2-Wire Analog Voice Grade Loop - Zone 2	I	2	UEANL	USBN2	9.06	85.03	39.05	59.81	7.90		7.86				
		Sub-Loop Distribution Per 2-Wire Analog Voice Grade Loop - Zone 3	I	3	UEANL	USBN2	14.82	85.03	39.05	59.81	7.90		7.86				
		Order Coordination for Unbundled Sub-Loops, per sub-loop pair			UEANL	USBMC		9.00	9.00								
		Sub-Loop Distribution Per 4-Wire Analog Voice Grade Loop - Zone 1		1	UEANL	USBN4	8.14	102.31	56.32	65.24	10.88		7.86				
		Sub-Loop Distribution Per 4-Wire Analog Voice Grade Loop - Zone 2		2	UEANL	USBN4	8.63	102.31	56.32	65.24	10.88		7.86				

UNBUNDLED NETWORK ELEMENTS - Kentucky														Attachment: 2		Exhibit: B	
CATEGORY		RATE ELEMENTS	Interim	Zone	BCS	USOC	RATES ($)					Svc Order Submitted Elec per LSR	Svc Order Submitted Manually per LSR	Incremental Charge - Manual Svc Order vs. Electronic-1st	Incremental Charge - Manual Svc Order vs. Electronic-Add'l	Incremental Charge - Manual Svc Order vs. Electronic-Disc 1st	Incremental Charge - Manual Svc Order vs. Electronic-Disc Add'l
							Rec	Nonrecurring		Nonrecurring Disconnect		OSS Rates($)					
								First	Add'l	First	Add'l	SOMEC	SOMAN	SOMAN	SOMAN	SOMAN	SOMAN
		Sub-Loop Distribution Per 4-Wire Analog Voice Grade Loop - Zone 3		3	UEANL	USBN4	25.60	102.31	56.32	65.24	10.88		7.86				
		Order Coordination for Unbundled Sub-Loops, per sub-loop pair			UEANL	USBMC		9.00	9.00								
		Sub-Loop 2-Wire Intrabuilding Network Cable (INC)	I		UEANL	USBR2	2.57	68.35	22.36	59.81	7.90		7.86				
		Order Coordination for Unbundled Sub-Loops, per sub-loop pair			UEANL	USBMC		9.00	9.00								
		Sub-Loop 4-Wire Intrabuilding Network Cable (INC)	I		UEANL	USBR4	4.98	76.49	30.51	65.24	10.88		7.86				
		Order Coordination for Unbundled Sub-Loops, per sub-loop pair			UEANL	USBMC		9.00	9.00								
		2 Wire Copper Unbundled Sub-Loop Distribution - Zone 1	I	1	UEF	UCS2X	5.45	85.03	39.05	59.81	7.90		7.86				
		2 Wire Copper Unbundled Sub-Loop Distribution - Zone 2	I	2	UEF	UCS2X	7.06	85.03	39.05	59.81	7.90		7.86				
		2 Wire Copper Unbundled Sub-Loop Distribution - Zone 3	I	3	UEF	UCS2X	9.67	85.03	39.05	59.81	7.90		7.86				
		Order Coordination for Unbundled Sub-Loops, per sub-loop pair			UEF	USBMC		9.00	9.00								
		4 Wire Copper Unbundled Sub-Loop Distribution - Zone 1	I	1	UEF	UCS4X	7.09	102.31	56.32	65.24	10.88		7.86				
		4 Wire Copper Unbundled Sub-Loop Distribution - Zone 2	I	2	UEF	UCS4X	8.66	102.31	56.32	65.24	10.88		7.86				
		4 Wire Copper Unbundled Sub-Loop Distribution - Zone 3	I	3	UEF	UCS4X	19.40	102.31	56.32	65.24	10.88		7.86				
		Order Coordination for Unbundled Sub-Loops, per sub-loop pair			UEF	USBMC		9.00	9.00								
	Unbundled Network Terminating Wire (UNTW)																
		Unbundled Network Terminating Wire (UNTW) per Pair			UENTW	UENPP	0.53	23.51	23.51				7.86				
	Network Interface Device (NID)																
		Network Interface Device (NID) - 1-2 lines			UENTW	UND12		73.53	49.47				7.86				
		Network Interface Device (NID) - 1-6 lines			UENTW	UND16		115.96	91.91				7.86				
		Network Interface Device Cross Connect - 2 W			UENTW	UNDC2		8.56	8.56				7.86				
		Network Interface Device Cross Connect - 4W			UENTW	UNDC4		8.56	8.56				7.86				
SUB-LOOPS																	
	Sub-Loop Feeder																
		USL-Feeder, DS0 Set-up per Cross Box location - CLEC Distribution Facility set-up			UEA, UDN,UCL,UDL,UDC	USBFW		207.91					7.86				
		USL Feeder - DS0 Set-up per Cross Box location - per 25 pair set-up			UEA, UDN,UCL,UDL,UDC	USBFX		12.50	12.50				7.86				
		USL Feeder DS1 Set-up at DSX location, per DS1 termination			USL	USBFZ		527.98	11.32				7.86				
		Unbundled Sub-Loop Feeder Loop, 2 Wire Ground Start, Voice Grade - Zone 1		1	UEA	USBFA	7.67	114.83	64.61	72.34	17.21		7.86				
		Unbundled Sub-Loop Feeder Loop, 2 Wire Ground-Start, Voice Grade - Zone 2		2	UEA	USBFA	9.70	114.83	64.61	72.34	17.21		7.86				
		Unbundled Sub-Loop Feeder Loop, Per 2 Wire Ground-Start, Voice Grade - Zone 3		3	UEA	USBFA	19.53	114.83	64.61	72.34	17.21		7.86				
		Order Coordination for Specified Conversion Time, per LSR			UEA	OCOSL		23.01									
		Unbundlde Sub-Loop Feeder Loop, 2 Wire Loop-Start, Voice Grade - Zone 1		1	UEA	USBFB	7.67	114.83	64.61	72.34	17.21		7.86				
		Unbundled Sub-Loop Feeder Loop, 2 Wire Loop-Start, Voice Grade - Zone 2		2	UEA	USBFB	9.70	114.83	64.61	72.34	17.21		7.86				
		Unbundled Sub-Loop Feeder Loop, 2 Wire Start Loop, Voice Grade - Zone 3		3	UEA	USBFB	19.53	114.83	64.61	72.34	17.21		7.86				
		Order Coordination for Specified Time Conversion, per LSR			UEA	OCOSL		23.01									
		Unbundled Sub-Loop Feeder Loop, 2 Wire Reverse Battery, Voice Grade - Zone 1		1	UEA	USBFC	7.67	114.83	64.61	72.34	17.21		7.86				
		Unbundled Sub-Loop Feeder Loop, 2 Wire Reverse Battery, Voice Grade - Zone 2		2	UEA	USBFC	9.70	114.83	64.61	72.34	17.21		7.86				
		Unbundled Sub-Loop Feeder Loop, 2 Wire Analog Reverse Battery, Voice Grade - Zone 3		3	UEA	USBFC	19.53	114.83	64.61	72.34	17.21		7.86				
		Order Coordination For Specified Conversion Time, per LSR			UEA	OCOSL		23.01									
		Unbundled Sub-Loop Feeder Loop, 4 Wire Ground-Start, Voice Grade - Zone 1		1	UEA	USBFD	22.82	131.73	79.98	81.82	51.56		7.86				
		Unbundled Sub-Loop Feeder Loop, 4 Wire Ground-Start, Voice Grade - Zone 2		2	UEA	USBFD	27.24	131.73	79.98	81.82	51.56		7.86				

CATEGORY	RATE ELEMENTS	Interim	Zone	BCS	USOC	RATES ($)					Svc Order Submitted Elec per LSR	Svc Order Submitted Manually per LSR	Attachment: 2		Exhibit: B	
													Incremental Charge - Manual Svc Order vs. Electronic-1st	Incremental Charge - Manual Svc Order vs. Electronic-Add'l	Incremental Charge - Manual Svc Order vs. Electronic-Disc 1st	Incremental Charge - Manual Svc Order vs. Electronic-Disc Add'l
						Rec	Nonrecurring		Nonrecurring Disconnect				OSS Rates($)			
							First	Add'l	First	Add'l	SOMEC	SOMAN	SOMAN	SOMAN	SOMAN	SOMAN
	Unbundled Sub-Loop Feeder Loop, 4 Wire Ground Start, Voice Grade - Zone 3		3	UEA	USBFD	61.41	131.73	79.98	81.82	51.56		7.86				
	Order Coordination For Specified Conversion Time, Per LSR			UEA	OCOSL		23.01									
	Unbundled Sub-Loop Feeder Loop, 4 Wire Loop-Start, Voice Grade - Zone 1		1	UEA	USBFE	22.82	131.73	79.98	81.82	51.56		7.86				
	Unbundled Sub-Loop Feeder Loop, 4 Wire Loop-Start, Voice Grade - Zone 2		2	UEA	USBFE	27.24	131.73	79.98	81.82	51.56		7.86				
	Unbundled Sub-Loop Feeder Loop, 4 Wire Loop-Start, Voice Grade - Zone 3		3	UEA	USBFE	61.41	131.73	79.98	81.82	51.56		7.86				
	Order Coordination For Specified Conversion Time, Per LSR			UEA	OCOSL		23.01									
	Unbundled Sub-Loop Feeder Loop, 2 Wire ISDN BRI - Zone 1		1	UDN	USBFF	13.00	131.79	80.04	74.16	16.60		7.86				
	Unbundled Sub-Loop Feeder Loop, 2-Wire ISDN BRI - Zone 2		2	UDN	USBFF	16.95	131.79	80.04	74.16	16.60		7.86				
	Unbundled Sub-Loop Feeder Loop, 2-Wire ISDN BRI - Zone 3		3	UDN	USBFF	28.95	131.79	80.04	74.16	16.60		7.86				
	Order Coordination For Specified Conversion Time, Per LSR			UDN	OCOSL		23.01									
	Unbundled Sub-Loop Feeder, 2 Wire UDC (IDSL compatible)		1	UDC	USBFS	13.00	131.79	80.04	74.16	16.60		7.86				
	Unbundled Sub-Loop Feeder, 2 Wire UDC (IDSL compatible)		2	UDC	USBFS	16.95	131.79	80.04	74.16	16.60		7.86				
	Unbundled Sub-Loop Feeder, 2 Wire UDC (IDSL compatible)		3	UDC	USBFS	28.95	131.79	80.04	74.16	16.60		7.86				
	Unbundled Sub-Loop Feeder Loop, 4-Wire DS1 - Zone 1		1	USL	USBFG	62.57	125.43	73.68	81.82	21.56		7.86				
	Unbundled Sub-Loop Feeder Loop, 4-Wire DS1 - Zone 2		2	USL	USBFG	87.71	125.43	73.68	81.82	21.56		7.86				
	Unbundled Sub-Loop Feeder Loop, 4-Wire DS1 - Zone 3		3	USL	USBFG	273.33	125.43	73.68	81.82	21.56		7.86				
	Order Coordination For Specified Conversion Time, Per LSR			USL	OCOSL		23.01									
	Unbundled Sub-Loop Feeder, 2-Wire Copper Loop - Zone 1		1	UCL	USBFH	6.44	105.31	53.57	71.16	13.61		7.86				
	Unbundled Sub-Loop Feeder Loop, 2-Wire Copper Loop - Zone 2		2	UCL	USBFH	5.78	105.31	53.57	71.16	13.61		7.86				
	Unbundled Sub-Loop Feeder Loop, 2-Wire Copper Loop - Zone 3		3	UCL	USBFH	4.25	105.31	53.57	71.16	13.61		7.86				
	Order Coordination For Specified Conversion Time, per LSR			UCL	OCOSL		23.01									
	Sub-Loop Feeder - Per 4-Wire Copper Loop - Zone 1		1	UCL	USBFJ	11.33	125.55	73.80	77.12	16.86		7.86				
	Sub-Loop Feeder - Per 4-Wire Copper Loop - Zone 2		2	UCL	USBFJ	10.18	125.55	73.80	77.12	16.86		7.86				
	Sub-Loop Feeder - Per 4-Wire Copper Loop - Zone 3		3	UCL	USBFJ	10.32	125.55	73.80	77.12	16.86		7.86				
	Order Coordination For Specified Conversion Time, per LSR			UCL	OCOSL		23.01									
	Sub-Loop Feeder - Per 4-Wire 19.2 Kbps Digital Grade Loop		1	UDL	USBFN	20.78	125.43	73.68	81.82	21.56		7.86				
	Sub-Loop Feeder - Per 4-Wire 19.2 Kbps Digital Grade Loop		2	UDL	USBFN	26.41	125.43	73.68	81.82	21.56		7.86				
	Sub-Loop Feeder - Per 4-Wire 19.2 Kbps Digital Grade Loop		3	UDL	USBFN	23.10	125.43	73.68	81.82	21.56		7.86				
	Sub-Loop Feeder - Per 4-Wire 56 Kbps Digital Grade Loop - Zone 1		1	UDL	USBFO	20.78	125.43	73.68	81.82	21.56		7.86				
	Sub-Loop Feeder - Per 4-Wire 56 Kbps Digital Grade Loop - Zone 2		2	UDL	USBFO	26.41	125.43	73.68	81.82	21.56		7.86				
	Sub-Loop Feeder - Per 4-Wire 56 Kbps Digital Grade Loop - Zone 3		3	UDL	USBFO	23.10	125.43	73.68	81.82	21.56		7.86				
	Order Coordination For Specified Time Conversion, per LSR			UDL	OCOSL		23.01									
	Sub-Loop Feeder - Per 4-Wire 64 Kbps Digital Grade Loop - Zone 1		1	UDL	USBFP	20.78	125.43	73.68	81.82	21.56		7.86				
	Sub-Loop Feeder - Per 4-Wire 64 Kbps Digital Grade Loop - Zone 2		2	UDL	USBFP	26.41	125.43	73.68	81.82	21.56		7.86				
	Sub-Loop Feeder - Per 4-Wire 64 Kbps Digital Grade Loop - Zone 3		3	UDL	USBFP	23.10	125.43	73.68	81.82	21.56		7.86				
	Order Coordination For Specified Conversion Time, per LSR			UDL	OCOSL		23.01									
SUB-LOOPS																
Sub-Loop Feeder																
	Sub Loop Feeder - DS3 - Per Mile Per Month	I		UE3	1L5SL	15.38										
	Sub Loop Feeder - DS3 - Facility Termination Per Month	I		UE3	USBF1	346.30	3,402.59	407.14	160.86	91.19		7.86				
	Sub Loop Feeder – STS-1 – Per Mile Per Month	I		UDLSX	1L5SL	15.38										
	Sub Loop Feeder - STS-1 - Facility Termination Per Month	I		UDLSX	USBF7	372.80	3,402.59	407.14	160.86	91.19		7.86				
UNBUNDLED LOOP CONCENTRATION																
	Unbundled Loop Concentration - System A (TR008)			ULC	UCT8A	423.72	359.34	359.34				7.86				
	Unbundled Loop Concentration - System B (TR008)			ULC	UCT8B	51.60	149.72	149.72				7.86				
	Unbundled Loop Concentration - System A (TR303)			ULC	UCT3A	460.27	359.34	359.34				7.86				
	Unbundled Loop Concentration - System B (TR303)			ULC	UCT3B	86.95	149.72	149.72				7.86				

UNBUNDLED NETWORK ELEMENTS - Kentucky														Attachment: 2		Exhibit: B	
CATEGORY		RATE ELEMENTS	Interim	Zone	BCS	USOC	RATES ($)					Svc Order Submitted Elec per LSR	Svc Order Submitted Manually per LSR	Incremental Charge - Manual Svc Order vs. Electronic-1st	Incremental Charge - Manual Svc Order vs. Electronic-Add'l	Incremental Charge - Manual Svc Order vs. Electronic-Disc 1st	Incremental Charge - Manual Svc Order vs. Electronic-Disc Add'l
							Rec	Nonrecurring		Nonrecurring Disconnect		OSS Rates($)					
								First	Add'l	First	Add'l	SOMEC	SOMAN	SOMAN	SOMAN	SOMAN	SOMAN
		Unbundled Loop Concentration - DS1 Loop Interface Card			ULC	UCTCO	4.90	71.69	51.51	22.99	6.00		7.86				
		Unbundled Loop Concentration - ISDN Loop Interface (Brite Card)			UDN	ULCC1	7.78	16.59	16.50	8.42	8.37		7.86				
		Unbundled Loop Concentration - UDC Loop Interface (Brite Card)			UDC	ULCCU	7.78	16.59	16.50	8.42	8.37		7.86				
		Unbundled Loop Concentration - -2 Wire Voice-Loop Start or Ground Start Loop Interface (POTS Card)			UEA	ULCC2	1.95	16.59	16.50	8.42	8.37		7.86				
		Unbundled Loop Concentration - 2 Wire Voice - Reverse Battery Loop Interface (SPOTS Card)			UEA	ULCCR	11.58	16.59	16.50	8.42	8.37		7.86				
		Unbundled Loop Concentration - 4 Wire Voice Loop Interface (Specials Card)			UEA	ULCC4	6.90	16.59	16.50	8.42	8.37		7.86				
		Unbundled Loop Concentration - TEST CIRCUIT Card			ULC	UCTTC	33.74	16.59	16.50	8.42	8.37		7.86				
		Unbundled Loop Concentration - Digital 19.2 Kbps Data Loop Interface			UDL	ULCC7	10.23	16.59	16.50	8.42	8.37		7.86				
		Unbundled Loop Concentration - Digital 56 Kbps Data Loop Interface			UDL	ULCC5	10.23	16.59	16.50	8.42	8.37		7.86				
		Unbundled Loop Concentration - Digital 64 Kbps Data Loop Interface			UDL	ULCC6	10.23	16.59	16.50	8.42	8.37		7.86				
UNE OTHER, PROVISIONING ONLY - NO RATE																	
		NID - Dispatch and Service Order for NID installation			UENTW	UNDBX	0.00	0.00									
		UNTW Circuit Id Establishment, Provisioning Only - No Rate			UENTW	UENCE	0.00	0.00									
		Unbundled Contract Name, Provisioning Only - No Rate			UEANL,UEF,UEQ,UENTW	UNECN	0.00	0.00									
UNE OTHER, PROVISIONING ONLY - NO RATE																	
		Unbundled Contact Name, Provisioning Only - no rate			UAL,UCL,UDC,UDL,UDN,UEA,UHL,ULC	UNECN	0.00	0.00									
		Unbundled Sub-Loop Feeder-2 Wire Cross Box Jumper - no rate			UEA,UDN,UCL,UDC	USBFQ	0.00	0.00									
		Unbundled Sub-Loop Feeder-4 Wire Cross Box Jumper - no rate			UEA,USL,UCL,UDL	USBFR	0.00	0.00									
		Unbundled DS1 Loop - Superframe Format Option - no rate			USL	CCOSF	0.00	0.00									
		Unbundled DS1 Loop - Expanded Superframe Format option - no rate			USL	CCOEF	0.00	0.00									
HIGH CAPACITY UNBUNDLED LOCAL LOOP																	
	NOTE: minimum billing period of three months for DS3/STS-1 Local Loop																
		High Capacity Unbundled Local Loop - DS3 - Per Mile per month			UE3	1L5ND	9.25										
		High Capacity Unbundled Local Loop - DS3 - Facility Termination per month			UE3	UE3PX	308.31	551.38	338.08	173.00	120.42		7.86				
		High Capacity Unbundled Local Loop - STS-1 - Per Mile per month			UDLSX	1L5ND	9.25										
		High Capacity Unbundled Local Loop - STS-1 - Facility Termination per month			UDLSX	UDLS1	320.51	551.38	338.08	173.00	120.42		7.86				
LOOP MAKE-UP																	
		Loop Makeup - Preordering Without Reservation, per working or spare facility queried (Manual).			UMK	UMKLW		23.40	23.40								
		Loop Makeup - Preordering With Reservation, per spare facility queried (Manual).			UMK	UMKLP		24.85	24.85								
HIGH FREQUENCY SPECTRUM																	
	LINE SHARING																
	SPLITTERS-CENTRAL OFFICE BASED																
		Line Sharing Splitter, per System 96 Line Capacity			ULS	ULSDA	198.83	379.05	0.00	358.55	0.00		7.86				
		Line Sharing Splitter, per System 24 Line Capacity			ULS	ULSDB	49.71	379.05	0.00	358.55	0.00		7.86				
		Line Sharing Splitter, Per System, 8 Line Capacity	I		ULS	ULSD8	16.94	377.71	0.00	357.29	0.00		7.86				
		Line Sharing-DLEC Owned Splitter in CO-CFA activaton-deactivation (per LSOD)			ULS	ULSDG		173.62	0.00	100.40	0.00		7.86				
	END USER ORDERING-CENTRAL OFFICE BASED-HIGH FREQUENCY SPECTRUM AKA LINE SHARING																
		Line Sharing - per Line Activation (BST Owned Splitter)			ULS	ULSDC	0.61	37.16	21.28	20.17	9.90		7.86				

UNBUNDLED NETWORK ELEMENTS - Kentucky														Attachment: 2		Exhibit: B	
CATEGORY		RATE ELEMENTS	Interim	Zone	BCS	USOC	RATES ($)					Svc Order Submitted Elec per LSR	Svc Order Submitted Manually per LSR	Incremental Charge - Manual Svc Order vs. Electronic-1st	Incremental Charge - Manual Svc Order vs. Electronic-Add'l	Incremental Charge - Manual Svc Order vs. Electronic-Disc 1st	Incremental Charge - Manual Svc Order vs. Electronic-Disc Add'l
							Rec	Nonrecurring		Nonrecurring Disconnect		OSS Rates($)					
								First	Add'l	First	Add'l	SOMEC	SOMAN	SOMAN	SOMAN	SOMAN	SOMAN
		Line Sharing - per Subsequent Activity per Line Rearrangement(BST Owned Splitter)			ULS	ULSDS		32.90	16.43				7.86				
		Line Sharing - per Subsequent Activity per Line Rearrangement(DLEC Owned Splitter)			ULS	ULSCS		32.90	16.43				7.86				
		Line Sharing - per Line Activation (DLEC owned Splitter)	I		ULS	ULSCC	0.61	47.44	19.31	20.67	12.74		7.86				
	LINE SPLITTING																
	END USER ORDERING-CENTRAL OFFICE BASED																
		Line Splitting - per line activation DLEC owned splitter	I		UEPSR UEPSB	UREOS	0.61										
		Line Splitting - per line activation BST owned - physical	I		UEPSR UEPSB	UREBP	0.61	37.02	21.20	21.10	9.87		7.86				
		Line Splitting - per line activation BST owned - virtual	I		UEPSR UEPSB	UREBV	0.61	37.02	21.20	21.10	9.87		7.86				
	REMOTE SITE HIGH FREQUENCY SPECTRUM																
	SPLITTERS-REMOTE SITE																
		Remote Site Line Share BellSouth Owned Splitter, 24 Port	I		ULS	ULSRB	38.55	114.83	0.00	84.55	0.00		7.86				
		Remote Site Line Share Cable Pair Activation CLEC Owned at RS and Deactivation	I		ULS	ULSTG		95.65	0.00	67.87	0.00		7.86				
	END USER ORDERING-REMOTE SITE HIGH FREQUENCY SPECTRUM AKA REMOTE SITE LINE SHARING																
		Remote Site Line Share Line Activationfor End User Served at RS, BST Splitter	I		ULS	ULSRC	0.61	37.16	21.28	20.17	9.90		7.86				
		RS Line Share Line Activation for End User served at RS, CLEC Splitter	I		ULS	ULSTC	0.61	37.16	21.28	20.17	9.90		7.86				
		Remote Site Line Share Subsequent Activity-RS BST Owned Splitter	I		ULS	ULSRS		49.16	17.83				7.86				
		Remote Site Line Share Subsequent Activity-RS CLEC Owned Splitter	I		ULS	ULSTS		49.16	17.83				7.86				
UNBUNDLED DEDICATED TRANSPORT																	
	NOTE: INTEROFFICE CHANNEL DEDICATED TRANSPORT - minimum billing period - below DS3=one month, DS3/STS-1=four months																
	INTEROFFICE CHANNEL - DEDICATED TRANSPORT																
		Interoffice Channel - Dedicated Transport - 2-Wire Voice Grade - Per Mile per month			U1TVX	1L5XX	0.01										
		Interoffice Channel - Dedicated Transport- 2- Wire Voice Grade - Facility Termination			U1TVX	U1TV2	29.11	47.34	31.78	22.77	8.75		7.86				
		Interoffice Channel - Dedicated Transpor t- 2-Wire Voice Grade Rev Bat. - Per Mile per month			U1TVX	1L5XX	0.01										
		Interoffice Channel - Dedicated Transport- 2- Wire VG Rev Bat. - Facility Termination			U1TVX	U1TR2	29.11	47.34	31.78	22.77	8.75		7.86				
		Interoffice Channel - Dedicated Transport - 4-Wire Voice Grade - Per Mile per month			U1TVX	1L5XX	0.01										
		Interoffice Channel - Dedicated Transport - 4- Wire Voice Grade - Facility Termination			U1TVX	U1TV4	25.86	47.34	31.78	22.77	8.75		7.86				
		Interoffice Channel - Dedicated Transport - 56 kbps - per mile per month			U1TDX	1L5XX	0.0115										
		Interoffice Channel - Dedicated Transport - 56 kbps - Facility Termination			U1TDX	U1TD5	20.97	47.35	31.78	22.77	8.75		7.86				
		Interoffice Channel - Dedicated Transport - 64 kbps - per mile per month			U1TDX	1L5XX	0.0115										
		Interoffice Channel - Dedicated Transport - 64 kbps - Facility Termination			U1TDX	U1TD6	20.97	47.35	31.78	22.77	8.75		7.86				
		Interoffice Channel - Dedicated Channel - DS1 - Per Mile per month			U1TD1	1L5XX	0.23										
		Interoffice Channel - Dedicated Tranport - DS1 - Facility Termination			U1TD1	U1TF1	96.04	105.52	98.46	23.09	20.49		7.86				
		Interoffice Channel - Dedicated Transport - DS3 - Per Mile per month			U1TD3	1L5XX	4.97										
		Interoffice Channel - Dedicated Transport - DS3 - Facility Termination per month			U1TD3	U1TF3	1,175.15	335.40	219.24	89.57	87.75		7.86				
		Interoffice Channel - Dedicated Transport - STS-1 - Per Mile per month			U1TS1	1L5XX	4.97										
		Interoffice Channel - Dedicated Transport - STS-1 - Facility Termination			U1TS1	U1TFS	1,149.51	335.40	219.24	89.57	87.75		7.86				

UNBUNDLED NETWORK ELEMENTS - Kentucky														Attachment: 2		Exhibit: B	
CATEGORY		RATE ELEMENTS	Interim	Zone	BCS	USOC	RATES ($)					Svc Order Submitted Elec per LSR	Svc Order Submitted Manually per LSR	Incremental Charge - Manual Svc Order vs. Electronic-1st	Incremental Charge - Manual Svc Order vs. Electronic-Add'l	Incremental Charge - Manual Svc Order vs. Electronic-Disc 1st	Incremental Charge - Manual Svc Order vs. Electronic-Disc Add'l
							Rec	Nonrecurring		Nonrecurring Disconnect		OSS Rates($)					
								First	Add'l	First	Add'l	SOMEC	SOMAN	SOMAN	SOMAN	SOMAN	SOMAN
	LOCAL CHANNEL - DEDICATED TRANSPORT																
	NOTE: LOCAL CHANNEL DEDICATED TRANSPORT - minimum billing period = below DS3=one month, DS3/STS-1=four months																
		Local Channel - Dedicated - 2-Wire Voice Grade			ULDVX	ULDV2	18.57	265.78	46.96	46.79	4.98		7.86				
		Local Channel - Dedicated - 2-Wire Voice Grade Rev Bat			ULDVX	ULDR2	18.57	265.78	46.96	46.79	4.98		7.86				
		Local Channel - Dedicated - 4-Wire Voice Grade			ULDVX	ULDV4	19.86	266.48	47.65	47.54	5.73		7.86				
		Local Channel - Dedicated - DS1 - Zone 1		1	ULDD1	ULDF1	40.46	209.60	176.51	30.21	21.07		7.86				
		Local Channel - Dedicated - DS1 - Zone 2		2	ULDD1	ULDF1	43.39	209.60	176.51	30.21	21.07		7.86				
		Local Channel - Dedicated - DS1 - Zone 3		3	ULDD1	ULDF1	164.50	209.60	176.51	30.21	21.07		7.86				
		Local Channel - Dedicated - DS3 - Per Mile per month			ULDD3	1L5NC	8.74										
		Local Channel - Dedicated - DS3 - Facility Termination			ULDD3	ULDF3	576.05	551.38	338.08	173.00	120.42		7.86				
		Local Channel - Dedicated - STS-1- Per Mile per month			ULDS1	1L5NC	8.74										
		Local Channel - Dedicated - STS-1 - Facility Termination			ULDS1	ULDFS	543.24	551.38	338.08	173.00	120.42		7.86				
DARK FIBER																	
		Dark Fiber, Four Fiber Strands, Per Route Mile or Fraction Thereof per month - Local Channel			UDF	1L5DC	47.01										
		NRC Dark Fiber - Local Channel			UDF	UDFC4		732.53	192.67	377.27	241.67		7.86				
		Dark Fiber, Four Fiber Strands, Per Route Mile or Fraction Thereof per month - Interoffice Channel			UDF	1L5DF	30.74										
		NRC Dark Fiber - Interoffice Channel			UDF	UDF14		732.53	192.67	377.27	241.67		7.86				
		Dark Fiber, Four Fiber Strands, Per Route Mile or Fraction Thereof per month - Local Loop			UDF	1L5DL	47.01										
		NRC Dark Fiber - Local Loop			UDF	UDFL4		732.53	192.67	377.27	241.67		7.86				
8XX ACCESS TEN DIGIT SCREENING																	
		8XX Access Ten Digit Screening, Per Call			OHD		0.0006478										
		8XX Access Ten Digit Screening, Reservation Charge Per 8XX Number Reserved			OHD	N8R1X		4.14	0.70				7.86				
		8XX Access Ten Digit Screening, Per 8XX No. Established W/O POTS Translations			OHD			8.78	1.18	7.08	0.86		7.86				
		8XX Access Ten Digit Screening, Per 8XX No. Established With POTS Translations			OHD	N8FTX		8.78	1.18	7.08	0.86		7.86				
		8XX Access Ten Digit Screening, Customized Area of Service Per 8XX Number			OHD	N8FCX		4.14	2.07				7.86				
		8XX Access Ten Digit Screening, Multiple InterLATA CXR Routing Per CXR Requested Per 8XX No.			OHD	N8FMX		4.85	2.78				7.86				
		8XX Access Ten Digit Screening, Change Charge Per Request			OHD	N8FAX		4.85	0.70				7.86				
		8XX Access Ten Digit Screening, Call Handling and Destination Features			OHD	N8FDX		4.14	4.14				7.86				
		8XX Access Ten Digit Screening w/ 8FL No. Delivery,			OHD		0.0006478										
		8XX Access Ten Digit Screening, w/ POTS No. Delivery,			OHD		0.0006478										
LINE INFORMATION DATA BASE ACCESS (LIDB)																	
		LIDB Common Transport Per Query			OQT		0.000023										
		LIDB Validation Per Query			OQU		0.0137322										
		LIDB Originating Point Code Establishment or Change			OQT, OQU	NRPBX		55.12		67.59			7.86				
SIGNALING (CCS7)																	
		CCS7 Signaling Connection, Per 56 Kbps Facility			UDB	TPP++	20.71	43.56	43.56	22.45	22.45						
		CCS7 Signaling Termination, Per STP Port			UDB	PT8SX	151.39										
		CCS7 Signaling Usage, Per TCAP Message			UDB		0.0000656										
		CCS7 Signaling Connection, Per link (A link)			UDB	TPP++	20.71	43.56	43.56	22.45	22.45		7.86				
		CCS7 Signaling Connection, Per link (B link) (also known as D link)			UDB	TPP++	20.71	43.56	43.56	22.45	22.45		7.86				
		CCS7 Signaling Usage, Per ISUP Message			UDB		0.0000164										
		CCS7 Signaling Usage Surrogate, per link per LATA			UDB	STU56	751.08										
		CCS7 Signaling Point Code, per Originating Point Code Establishment or Change, per STP affected			UDB	CCAPO		46.02	46.02	56.43	56.43		7.86				
		CCS7 Signaling Point Code, per Destination Point Code Establishment or Change, Per Stp Affected			UDB	CCAPD		46.02	46.02	56.43	56.43		7.86				
E911 SERVICE																	
		Local Channel - Dedicated - 2-wr Voice Grade					18.57	265.78	46.96	46.79	4.98		7.86				
		Interoffice Transport - Dedicated - 2-wr Voice Grade Per Mile					0.0115										

UNBUNDLED NETWORK ELEMENTS - Kentucky														Attachment: 2		Exhibit: B	
CATEGORY		RATE ELEMENTS	Interim	Zone	BCS	USOC	RATES ($)					Svc Order Submitted Elec per LSR	Svc Order Submitted Manually per LSR	Incremental Charge - Manual Svc Order vs. Electronic-1st	Incremental Charge - Manual Svc Order vs. Electronic-Add'l	Incremental Charge - Manual Svc Order vs. Electronic-Disc 1st	Incremental Charge - Manual Svc Order vs. Electronic-Disc Add'l
							Rec	Nonrecurring		Nonrecurring Disconnect		OSS Rates($)					
								First	Add'l	First	Add'l	SOMEC	SOMAN	SOMAN	SOMAN	SOMAN	SOMAN
		Interoffice Transport - Dedicated - 2-wr Voice Grade Per Facility Termination					29.11	47.34	31.78	22.77	8.75		7.86				
		Local Channel - Dedicated - DS1 - Zone 1					40.46	209.60	176.51	30.21	21.07		7.86				
		Local Channel - Dedicated - DS1 - Zone 2					43.39	209.60	176.51	30.21	21.07		7.86				
		Local Channel - Dedicated - DS1 - Zone 3					164.50	209.60	176.51	30.21	21.07		7.86				
		Interoffice Transport - Dedicated - DS1 Per Mile					0.23										
		Interoffice Transport - Dedicated - DS1 Per Facility Termination					96.04	105.52	98.46	23.09	20.49		7.86				
CALLING NAME (CNAM) SERVICE																	
		CNAM For DB Owners - Service Establishment			OQV			25.34	25.34	23.30	23.30		7.86				
		CNAM For Non DB Owners - Service Establishment			OQV			25.34	25.34	23.30	23.30		7.86				
		CNAM For DB Owners - Service Provisioning With Point Code Establishment			OQV			1,591.54	1,177.08	431.95	317.61		7.86				
		CNAM For Non DB Owners - Service Provisioning With Point Code Establishment			OQV			546.40	393.74	438.93	317.61		7.86				
		CNAM for DB Owners, Per Query			OQV		0.0010348										
		CNAM for Non DB Owners, Per Query			OQV		0.0010348										
		CNAM (Non-Databs Owner), NRC, applies when using the Character Based User Interface (CHUI)			OQV	CDDCH		595.00	595.00				7.86				
LNP Query Service																	
		LNP Charge Per query					0.0008695										
		LNP Service Establishment Manual						13.82	13.82	12.71	12.71		7.86				
		LNP Service Provisioning with Point Code Establishment						953.27	487.00	431.95	317.61		7.86				
OPERATOR CALL PROCESSING																	
		Oper. Call Processing - Oper. Provided, Per Min. - Using BST LIDB					1.20										
		Oper. Call Processing - Oper. Provided, Per Min. - Using Foreign LIDB					1.24										
		Oper. Call Processing - Fully Automated, per Call - Using BST LIDB					0.20										
		Oper. Call Processing - Fully Automated, per Call - Using Foreign LIDB					0.20										
INWARD OPERATOR SERVICES																	
		Inward Operator Services - Verification, Per Call					1.00										
		Inward Operator Services - Verification and Emergency Interrupt - Per Call					1.95										
BRANDING - OPERATOR CALL PROCESSING																	
	Facility based CLEC																
		Recording of Custom Branded OA Announcement				CBAOS		7,000.00	7,000.00				7.86				
		Loading of Custom Branded OA Announcement per shelf/NAV per OCN				CBAOL		500.00	500.00				7.86				
	UNEP CLEC																
		Recording of Custom Branded OA Announcement						7,000.00	7,000.00				7.86				
		Loading of Custom Branded OA Announcement per shelf/NAV per OCN						500.00	500.00				7.86				
	Unbranding via OLNS for UNEP CLEC																
		Loading of OA per OCN (Regional)						1,200.00	1,200.00				7.86				
DIRECTORY ASSISTANCE SERVICES																	
	DIRECTORY ASSISTANCE ACCESS SERVICE																
		Directory Assistance Access Service Calls, Charge Per Call					0.275										
	DIRECTORY ASSISTANCE CALL COMPLETION ACCESS SERVICE (DACC)																
		Directory Assistance Call Completion Access Service (DACC), Per Call Attempt					0.10										
DIRECTORY ASSISTANCE SERVICES																	
	DIRECTORY ASSISTANCE DATA BASE SERVICE (DADS)																
		Directory Assistance Data Base Service Charge Per Listing					0.04										
		Directory Assistance Data Base Service, per month				DBSOF	150.00										
BRANDING - DIRECTORY ASSISTANCE																	
	Facility Based CLEC																

UNBUNDLED NETWORK ELEMENTS - Kentucky														Attachment: 2		Exhibit: B	
CATEGORY		RATE ELEMENTS	Interim	Zone	BCS	USOC	RATES ($)					Svc Order Submitted Elec per LSR	Svc Order Submitted Manually per LSR	Incremental Charge - Manual Svc Order vs. Electronic-1st	Incremental Charge - Manual Svc Order vs. Electronic-Add'l	Incremental Charge - Manual Svc Order vs. Electronic-Disc 1st	Incremental Charge - Manual Svc Order vs. Electronic-Disc Add'l
							Rec	Nonrecurring		Nonrecurring Disconnect		OSS Rates($)					
								First	Add'l	First	Add'l	SOMEC	SOMAN	SOMAN	SOMAN	SOMAN	SOMAN
		Recording and Provisioning of DA Custom Branded Announcement			AMT	CBADA		3,000.00	3,000.00				7.86				
		Loading of Custom Branded Announcement per Switch per OCN			AMT	CBADC		1,170.00	1,170.00				7.86				
	UNEP CLEC																
		Recording of DA Custom Branded Announcement						3,000.00	3,000.00				7.86				
		Loading of DA Custom Branded Announcement per Switch per OCN						1,170.00	1,170.00				7.86				
	Unbranding via OLNS for UNEP CLEC																
		Loading of DA per OCN (1 OCN per Order)						420.00	420.00				7.86				
		Loading of DA per Switch per OCN						16.00	16.00				7.86				
SELECTIVE ROUTING																	
		Selective Routing Per Unique Line Class Code Per Request Per Switch				USRCR		93.53	93.53	15.58	15.58		7.86				
VIRTUAL COLLOCATION																	
		Virtual Collocation-2 Wire Cross Connects (Loop) for Line Splitting			UEPSR, UEPSB	VE1LS	0.309	24.68	23.68	12.14	10.95		7.86				
PHYSICAL COLLOCATION																	
		Physical Collocation-2 Wire Cross Connects (Loop) for Line Splitting			UEPSR, UEPSB	PE1LS	0.0333	24.68	23.68	12.14	10.95		7.86				
AIN SELECTIVE CARRIER ROUTING																	
		Regional Service Establishment			SRC	SRCEC		193,401.00	193,401.00	9,483.34	9,483.34		7.86				
		End Office Establishment			SRC	SRCEO		194.09	194.09	0.85	0.85		7.86				
		Line/Port NRC, per end user			SRC	SRCLP		2.06	2.06				7.86				
		Query NRC, per query			SRC		0.0037502										
AIN - BELLSOUTH AIN SMS ACCESS SERVICE																	
		AIN SMS Access Service - Service Establishment, Per State, Initial Setup			A1N	CAMSE		43.55	43.55	44.93	44.93		7.86				
		AIN SMS Access Service - Port Connection - Dial/Shared Access			A1N	CAMDP		8.64	8.64	10.03	10.03		7.86				
		AIN SMS Access Service - Port Connection - ISDN Access			A1N	CAM1P		8.64	8.64	10.03	10.03		7.86				
		AIN SMS Access Service - User Identification Codes - Per User ID Code			A1N	CAMAU		38.65	38.65	29.88	29.88		7.86				
		AIN SMS Access Service - Security Card, Per User ID Code, Initial or Replacement			A1N	CAMRC		75.08	75.08	12.93	12.93		7.86				
		AIN SMS Access Service - Storage, Per Unit (100 Kilobytes)					0.0025										
		AIN SMS Access Service - Session, Per Minute					0.666										
		AIN SMS Access Service - Company Performed Session, Per Minute					0.4608										
AIN - BELLSOUTH AIN TOOLKIT SERVICE																	
		AIN Toolkit Service - Service Establishment Charge, Per State, Initial Setup			CAM	BAPSC		43.55	43.55	44.93	44.93		7.86				
		AIN Toolkit Service - Training Session, Per Customer				BAPVX		8,436.93	8,436.93				7.86				
		AIN Toolkit Service - Trigger Access Charge, Per Trigger, Per DN, Term. Attempt				BAPTT		8.64	8.64	10.03	10.03		7.86				
		AIN Toolkit Service - Trigger Access Charge, Per Trigger, Per DN, Off-Hook Delay				BAPTD		8.64	8.64	10.03	10.03		7.86				
		AIN Toolkit Service - Trigger Access Charge, Per Trigger, Per DN, Off-Hook Immediate				BAPTM		8.64	8.64	10.03	10.03		7.86				
		AIN Toolkit Service - Trigger Access Charge, Per Trigger, Per DN, 10-Digit PODP				BAPTO		51.01	51.01	18.50	18.50		7.86				
		AIN Toolkit Service - Trigger Access Charge, Per Trigger, Per DN, CDP				BAPTC		51.01	51.01	18.50	18.50		7.86				
		AIN Toolkit Service - Trigger Access Charge, Per Trigger, Per DN, Feature Code				BAPTF		51.01	51.01	18.50	18.50		7.86				
		AIN Toolkit Service - Query Charge, Per Query					0.0549207										
		AIN Toolkit Service - Type 1 Node Charge, Per AIN Toolkit Subscription, Per Node, Per Query					0.0066492										

UNBUNDLED NETWORK ELEMENTS - Kentucky														Attachment: 2		Exhibit: B	
CATEGORY		RATE ELEMENTS	Interim	Zone	BCS	USOC	RATES ($)					Svc Order Submitted Elec per LSR	Svc Order Submitted Manually per LSR	Incremental Charge - Manual Svc Order vs. Electronic-1st	Incremental Charge - Manual Svc Order vs. Electronic-Add'l	Incremental Charge - Manual Svc Order vs. Electronic-Disc 1st	Incremental Charge - Manual Svc Order vs. Electronic-Disc Add'l
							Rec	Nonrecurring		Nonrecurring Disconnect		OSS Rates($)					
								First	Add'l	First	Add'l	SOMEC	SOMAN	SOMAN	SOMAN	SOMAN	SOMAN
		AIN Toolkit Service - SCP Storage Charge, Per SMS Access Account, Per 100 Kilobytes					0.07										
		AIN Toolkit Service - Monthly report - Per AIN Toolkit Service Subscription			CAM	BAPMS	7.87	8.64	8.64	6.08	6.08		7.86				
		AIN Toolkit Service - Special Study - Per AIN Toolkit Service Subscription			CAM	BAPLS	3.26	9.56	9.56				7.86				
		AIN Toolkit Service - Call Event Report - Per AIN Toolkit Service Subscription			CAM	BAPDS	4.72	8.64	8.64	6.08	6.08		7.86				
		AIN Toolkit Service - Call Event Special Study - Per AIN Toolkit Service Subscription			CAM	BAPES	0.11	9.56	9.56				7.86				
ENHANCED EXTENDED LINK (EELs)																	
	NOTE: The monthly recurring and non-recurring charges below will apply and the Switch-As-Is Charge will not apply for EELs provisioned as ' Ordinarily Combined' Network Elements.																
	NOTE: The monthly recurring and the Switch-As-Is Charge and not the non-recurring charges below will apply for EELs provisioned as ' Currently Combined' Network Elements.																
	NOTE: Minimum billing is one month for DS1 and below and three months above DS1 services.																
	2-WIRE VOICE GRADE EXTENDED LOOP WITH DEDICATED DS1 INTEROFFICE TRANSPORT (EEL)																
		First 2-Wire VG Loop(SL2) in a DS1 Interofficed Transport Combination - Zone 1		1	UNCVX	UEAL2	12.67	125.22	60.48	59.69	7.84		7.86				
		First 2-Wire VG Grade Loop(SL2) in a DS1 Interofficed Transport Combination - Zone 2		2	UNCVX	UEAL2	17.45	125.22	60.48	59.69	7.84		7.86				
		First 2-Wire VG Grade Loop(SL2) in a DS1 Interofficed Transport Combination - Zone 3		3	UNCVX	UEAL2	33.22	125.22	60.48	59.69	7.84		7.86				
		Interoffice Transport - Dedicated - DS1 combination - Per Mile per month			UNC1X	1L5XX	0.19										
		Interoffice Transport - Dedicated - DS1 combination - Facility Termination per month			UNC1X	U1TF1	79.02	181.24	123.53	56.72	22.32		7.86				
		DS1 Channelization System Per Month			UNC1X	MQ1	113.33	57.26	14.74	1.86	1.67		7.86				
		Voice Grade COCI - DS1 To Ds0 Interface - Per Month			UNCVX	1D1VG	0.62	6.71	4.84				7.86				
		Each Additional 2-Wire VG Loop(SL 2) in the same DS1 Interoffice Transport Combination - Zone 1		1	UNCVX	UEAL2	12.67	125.22	60.48	59.69	7.84		7.86				
		Each Additional 2-Wire VG Loop(SL2) in the same DS1 Interoffice Transport Combination - Zone 2		2	UNCVX	UEAL2	17.45	125.22	60.48	59.69	7.84		7.86				
		Each Additional 2-Wire VG Loop(SL2) in the same DS1 Interoffice Transport Combination - Zone 3		3	UNCVX	UEAL2	33.22	125.22	60.48	59.69	7.84		7.86				
		Voice Grade COCI - DS1 to DS0 Channel System combination - per month			UNCVX	1D1VG	0.62	6.71	4.84				7.86				
		Nonrecurring Currently Combined Network Elements Switch -As-Is Charge			UNC1X	UNCCC		8.98	8.98	11.17	11.17		7.86				
	4-WIRE VOICE GRADE EXTENDED LOOP WITH DEDICATED DS1 INTEROFFICE TRANSPORT (EEL)																
		First 4-Wire Analog Voice Grade Loop in a DS1 Interoffice Transport Combination - Zone 1		1	UNCVX	UEAL4	29.26	125.22	60.48	59.69	7.84		7.86				
		First 4-Wire Analog Voice Grade Loop in a DS1 Interoffice Transport Combination - Zone 2		2	UNCVX	UEAL4	34.25	125.22	60.48	59.69	7.84		7.86				
		First 4-Wire Analog Voice Grade Loop in a DS1 Interoffice Transport Combination - Zone 3		3	UNCVX	UEAL4	85.06	125.22	60.48	59.69	7.84		7.86				
		Interoffice Transport - Dedicated - DS1 combination - Per Mile Per Month			UNC1X	1L5XX	0.19										
		Interoffice Transport - Dedicated - DS1 - Facility Termination Per Month			UNC1X	U1TF1	79.02	181.24	123.53	56.72	22.32		7.86				
		Channelization - Channel System DS1 to DS0 combination Per Month			UNC1X	MQ1	113.33	57.26	14.74	1.86	1.67		7.86				
		Voice Grade COCI - DS1 to DS0 Channel System combination - per month			UNCVX	1D1VG	0.62	6.71	4.84				7.86				
		Additional 4-Wire Analog Voice Grade Loop in same DS1 Interoffice Transport Combination - Zone 1		1	UNCVX	UEAL4	29.26	125.22	60.48	59.69	7.84		7.86				
		Additional 4-Wire Analog Voice Grade Loop in same DS1 Interoffice Transport Combination - Zone 2		2	UNCVX	UEAL4	34.25	125.22	60.48	59.69	7.84		7.86				
		Additional 4-Wire Analog Voice Grade Loop in same DS1 Interoffice Transport Combination - Zone 3		3	UNCVX	UEAL4	85.06	125.22	60.48	59.69	7.84		7.86				

UNBUNDLED NETWORK ELEMENTS - Kentucky														Attachment: 2		Exhibit: B	
CATEGORY		RATE ELEMENTS	Interim	Zone	BCS	USOC	RATES ($)					Svc Order Submitted Elec per LSR	Svc Order Submitted Manually per LSR	Incremental Charge - Manual Svc Order vs. Electronic-1st	Incremental Charge - Manual Svc Order vs. Electronic-Add'l	Incremental Charge - Manual Svc Order vs. Electronic-Disc 1st	Incremental Charge - Manual Svc Order vs. Electronic-Disc Add'l
							Rec	Nonrecurring		Nonrecurring Disconnect		OSS Rates($)					
								First	Add'l	First	Add'l	SOMEC	SOMAN	SOMAN	SOMAN	SOMAN	SOMAN
		Voice Grade COCI - DS1 to DS0 Channel System combination - per month			UNCVX	1D1VG	0.62	6.71	4.84				7.86				
		Nonrecurring Currently Combined Network Elements Switch -As-Is Charge			UNC1X	UNCCC		8.98	8.98	11.17	11.17		7.86				
	4-WIRE 56 KBPS EXTENDED DIGITAL LOOP WITH DEDICATED DS1 INTEROFFICE TRANSPORT (EEL)																
		First 4-Wire 56Kbps Digital Grade Loop in a DS1 Interoffice Transport Combination - Zone 1		1	UNCDX	UDL56	27.59	125.22	60.48	59.69	7.84		7.86				
		First 4-wire 56Kbps Digital Grade Loop in a DS1 Interoffice Transport Combination - Zone 2		2	UNCDX	UDL56	32.48	125.22	60.48	59.69	7.84		7.86				
		First 4-Wire 56Kbps Digital Grade Loop in a DS1 Interoffice Transport Combination - Zone 3		3	UNCDX	UDL56	36.37	125.22	60.48	59.69	7.84		7.86				
		Interoffice Transport - Dedicated - DS1 combination - Per Mile Per Month			UNC1X	1L5XX	0.19										
		Interoffice Transport - Dedicated - DS1 - combination Facility Termination Per Month			UNC1X	U1TF1	79.02	181.24	123.53	56.72	22.32		7.86				
		Channelization - Channel System DS1 to DS0 combination Per Month			UNC1X	MQ1	113.33	57.26	14.74	1.86	1.67		7.86				
		OCU-DP COCI (data) - DS1 to DS0 Channel System - per month (2.4-64kbs)			UNCDX	1D1DD	1.32	6.71	4.84				7.86				
		Additional 4-Wire 56Kbps Digital Grade Loopin same DS1 Interoffice Transport Combination - Zone 1		1	UNCDX	UDL56	27.59	125.22	60.48	59.69	7.84		7.86				
		Additional 4-Wire 56Kbps Digital Grade Loopin same DS1 Interoffice Transport Combination - Zone 2		2	UNCDX	UDL56	32.48	125.22	60.48	59.69	7.84		7.86				
		Additional 4-Wire 56Kbps Digital Grade Loopin same DS1 Interoffice Transport Combination - Zone 3		3	UNCDX	UDL56	36.37	125.22	60.48	59.69	7.84		7.86				
		OCU-DP COCI (data) - DS1 to DS0 Channel System - combination per month (2.4-64kbs)			UNCDX	1D1DD	1.32	6.71	4.84				7.86				
		Nonrecurring Currently Combined Network Elements Switch -As-Is Charge			UNC1X	UNCCC		8.98	8.98	11.17	11.17		7.86				
	4-WIRE 64 KBPS EXTENDED DIGITAL LOOP WITH DEDICATED DS1 INTEROFFICE TRANSPORT (EEL)																
		First 4-Wire 64Kbps Digital Grade Loop in a DS1 Interoffice Transport Combination - Zone 1		1	UNCDX	UDL64	27.59	125.22	60.48	59.69	7.84		7.86				
		First 4-Wire 64Kbps Digital Grade Loop in a DS1 Interoffice Transport Combination - Zone 2		2	UNCDX	UDL64	32.48	125.22	60.48	59.69	7.84		7.86				
		First 4-Wire 64Kbps Digital Grade Loop in a DS1 Interoffice Transport Combination - Zone 3		3	UNCDX	UDL64	36.37	125.22	60.48	59.69	7.84		7.86				
		Interoffice Transport - Dedicated - DS1 combination - Per Mile Per Month			UNC1X	1L5XX	0.19										
		Interoffice Transport - Dedicated - DS1 combination - Facility Termination Per Month			UNC1X	U1TF1	79.02	181.24	123.53	56.72	22.32		7.86				
		Channelization - Channel System DS1 to DS0 combination Per Month			UNC1X	MQ1	113.33	57.26	14.74	1.86	1.67		7.86				
		OCU-DP COCI (data) - DS1 to DS0 Channel System combination - per month (2.4-64kbs)			UNCDX	1D1DD	1.32	6.71	4.84				7.86				
		Additional 4-Wire 64Kbps Digital Grade Loopin same DS1 Interoffice Transport Combination - Zone 1		1	UNCDX	UDL64	27.59	125.22	60.48	59.69	7.84		7.86				
		Additional 4-Wire 64Kbps Digital Grade Loopin same DS1 Interoffice Transport Combination - Zone 2		2	UNCDX	UDL64	32.48	125.22	60.48	59.69	7.84		7.86				
		Additional 4-Wire 64Kbps Digital Grade Loopin same DS1 Interoffice Transport Combination - Zone 3		3	UNCDX	UDL64	36.37	125.22	60.48	59.69	7.84		7.86				
		OCU-DP COCI (data) - DS1 to DS0 Channel System combination - per month (2.4-64kbs)			UNCDX	1D1DD	1.32	6.71	4.84				7.86				
		Nonrecurring Currently Combined Network Elements Switch -As-Is Charge			UNC1X	UNCCC		8.98	8.98	11.17	11.17		7.86				
	4-WIRE DS1 DIGITAL EXTENDED LOOP WITH DEDICATED DS1 INTEROFFICE TRANSPORT (EEL)																
		4-Wire DS1 Digital Loop in Combination with DS1 Interoffice Transport - Zone 1		1	UNC1X	USLXX	86.47	210.70	114.60	63.96	17.97		7.86				
		4-Wire DS1 Digital Loop in Combination with DS1 Interoffice Transport - Zone 2		2	UNC1X	USLXX	114.10	210.70	114.60	63.96	17.97		7.86				

CATEGORY	RATE ELEMENTS	Interim	Zone	BCS	USOC	RATES ($)					Svc Order Submitted Elec per LSR	Svc Order Submitted Manually per LSR	Attachment: 2 Incremental Charge - Manual Svc Order vs. Electronic-1st	Attachment: 2 Incremental Charge - Manual Svc Order vs. Electronic-Add'l	Exhibit: B Incremental Charge - Manual Svc Order vs. Electronic-Disc 1st	Exhibit: B Incremental Charge - Manual Svc Order vs. Electronic-Disc Add'l
						Rec	Nonrecurring		Nonrecurring Disconnect		OSS Rates($)					
							First	Add'l	First	Add'l	SOMEC	SOMAN	SOMAN	SOMAN	SOMAN	SOMAN
	4-Wire DS1 Digital Loop in Combination with DS1 Interoffice Transport - Zone 3		3	UNC1X	USLXX	297.76	210.70	114.60	63.96	17.97		7.86				
	Interoffice Transport - Dedicated - DS1 combination - Per Mile Per Month			UNC1X	1L5XX	0.19										
	Interoffice Transport - Dedicated - DS1 combination - Facility Termination Per Month			UNC1X	U1TF1	79.02	181.24	123.53	56.72	22.32		7.86				
	Nonrecurring Currently Combined Network Elements Switch -As-Is Charge			UNC1X	UNCCC		8.98	8.98	11.17	11.17		7.86				
4-WIRE DS1 DIGITAL EXTENDED LOOP WITH DEDICATED DS3 INTEROFFICE TRANSPORT (EEL)																
	First DS1Loop in DS3 Interoffice Transport Combination - Zone 1		1	UNC1X	USLXX	86.47	210.70	114.60	63.96	17.97		7.86				
	First DS1Loop in DS3 Interoffice Transport Combination - Zone 2		2	UNC1X	USLXX	114.10	210.70	114.60	63.96	17.97		7.86				
	First DS1Loop in DS3 Interoffice Transport Combination - Zone 3		3	UNC1X	USLXX	297.76	210.70	114.60	63.96	17.97		7.86				
	Interoffice Transport - Dedicated - DS3 combination - Per Mile Per Month			UNC3X	1L5XX	4.09										
	Interoffice Transport - Dedicated - DS3 - Facility Termination per month			UNC3X	U1TF3	966.89	350.56	141.58	48.00	23.39		7.86				
	DS3 to DS1 Channel System combination per month			UNC3X	MQ3	158.20	115.48	56.53	15.12	5.30		7.86				
	DS3 Interface Unit (DS1 COCI) combination per month			UNC1X	UC1D1	11.80	6.71	4.84				7.86				
	Additional DS1Loop in DS3 Interoffice Transport Combination - Zone 1		1	UNC1X	USLXX	86.47	210.70	114.60	63.96	17.97		7.86				
	Additional DS1Loop in DS3 Interoffice Transport Combination - Zone 2		2	UNC1X	USLXX	114.10	210.70	114.60	63.96	17.97		7.86				
	Additional DS1Loop in DS3 Interoffice Transport Combination - Zone 3		3	UNC1X	USLXX	297.76	210.70	114.60	63.96	17.97		7.86				
	DS3 Interface Unit (DS1 COCI) combination per month			UNC1X	UC1D1	11.80	6.71	4.84				7.86				
	Nonrecurring Currently Combined Network Elements Switch -As-Is Charge			UNC3X	UNCCC		8.98	8.98	11.17	11.17		7.86				
2-WIRE VOICE GRADE EXTENDED LOOP/ 2 WIRE VOICE GRADE INTEROFFICE TRANSPORT (EEL)																
	2-WireVG Loop used with 2-wire VG Interoffice Transport Combination - Zone 1		1	UNCVX	UEAL2	12.67	125.22	60.48	59.69	7.84		7.86				
	2-WireVG Loop used with 2-wire VG Interoffice Transport Combination - Zone 2		2	UNCVX	UEAL2	17.45	125.22	60.48	59.69	7.84		7.86				
	2-WireVG Loop used with 2-wire VG Interoffice Transport Combination - Zone 3		3	UNCVX	UEAL2	33.22	125.22	60.48	59.69	7.84		7.86				
	Interoffice Transport - Dedicated - 2-wire VG combination - Per Mile Per Month			UNCVX	1L5XX	0.01										
	Interoffice Transport - Dedicated - 2- Wire Voice Grade combination - Facility Termination per month			UNCVX	U1TV2	23.95	98.09	53.67	56.31	22.42		7.86				
	Nonrecurring Currently Combined Network Elements Switch -As-Is Charge			UNCVX	UNCCC		8.98	8.98	11.17	11.17		7.86				
4-WIRE VOICE GRADE EXTENDED LOOP/ 4 WIRE VOICE GRADE INTEROFFICE TRANSPORT (EEL)																
	4-WireVG Loop used with 4-wire VG Interoffice Transport Combination - Zone 1		1	UNCVX	UEAL4	29.26	125.22	60.48	59.69	7.84		7.86				
	4-WireVG Loop used with 4-wire VG Interoffice Transport Combination - Zone 2		2	UNCVX	UEAL4	34.25	125.22	60.48	59.69	7.84		7.86				
	4-WireVG Loop used with 4-wire VG Interoffice Transport Combination - Zone 3		3	UNCVX	UEAL4	85.06	125.22	60.48	59.69	7.84		7.86				
	Interoffice Transport - Dedicated - 4-wire VG combination - Per Mile Per Month			UNCVX	1L5XX	0.01										
	Interoffice Transport - Dedicated - 4- Wire Voice Grade combination - Facility Termination per month			UNCVX	U1TV4	21.28	98.09	53.67	56.31	22.42		7.86				
	Nonrecurring Currently Combined Network Elements Switch -As-Is Charge			UNCVX	UNCCC		8.98	8.98	11.17	11.17		7.86				
DS3 DIGITAL EXTENDED LOOP WITH DEDICATED DS3 INTEROFFICE TRANSPORT (EEL)																
	High Capacity Unbundled Local Loop - DS3 combination - Per Mile per month			UNC3X	1L5ND	9.25										

CATEGORY	RATE ELEMENTS	Interim	Zone	BCS	USOC	RATES ($)					Svc Order Submitted Elec per LSR	Svc Order Submitted Manually per LSR	Attachment: 2		Exhibit: B	
													Incremental Charge - Manual Svc Order vs. Electronic-1st	Incremental Charge - Manual Svc Order vs. Electronic-Add'l	Incremental Charge - Manual Svc Order vs. Electronic-Disc 1st	Incremental Charge - Manual Svc Order vs. Electronic-Disc Add'l
						Rec	Nonrecurring		Nonrecurring Disconnect				OSS Rates($)			
							First	Add'l	First	Add'l	SOMEC	SOMAN	SOMAN	SOMAN	SOMAN	SOMAN
	High Capacity Unbundled Local Loop - DS3 combination - Facility Termination per month			UNC3X	UE3PX	308.31	237.36	147.69	83.43	32.67		7.86				
	Interoffice Transport - Dedicated - DS3 - Per Mile per month			UNC3X	1L5XX	4.09										
	Interoffice Transport - Dedicated - DS3 combination - Facility Termination per per month			UNC3X	U1TF3	966.89	350.56	141.58	48.00	23.39		7.86				
	Nonrecurring Currently Combined Network Elements Switch -As-Is Charge			UNC3X	UNCCC		8.98	8.98	11.17	11.17		7.86				
STS1 DIGITAL EXTENDED LOOP WITH DEDICATED STS1 INTEROFFICE TRANSPORT (EEL)																
	High Capacity Unbundled Local Loop - STS1 combination - Per Mile per month			UNCSX	1L5ND	9.25										
	High Capacity Unbundled Local Loop - STS1 combination - Facility Termination per month			UNCSX	UDLS1	320.51	237.36	147.69	83.43	32.67		7.86				
	Interoffice Transport - Dedicated - STS1 combination - Per Mile per month			UNCSX	1L5XX	4.09										
	Interoffice Transport - Dedicated - STS1 combination - Facility Termination per month			UNCSX	U1TFS	945.79	350.56	141.58	48.00	23.39		7.86				
	Nonrecurring Currently Combined Network Elements Switch -As-Is Charge			UNCSX	UNCCC		8.98	8.98	11.17	11.17		7.86				
2-WIRE ISDN EXTENDED LOOP WITH DS1 INTEROFFICE TRANSPORT (EEL)																
	First 2-Wire ISDN Loop in a DS1 Interoffice Combination Transport - Zone 1		1	UNCNX	U1L2X	18.44	125.22	60.48	59.69	7.84		7.86				
	First 2-Wire ISDN Loop in a DS1 Interoffice Combination Transport - Zone 2		2	UNCNX	U1L2X	25.08	125.22	60.48	59.69	7.84		7.86				
	First 2-Wire ISDN Loop in a DS1 Interoffice Combination Transport - Zone 3		3	UNCNX	U1L2X	42.87	125.22	60.48	59.69	7.84		7.86				
	Interoffice Transport - Dedicated - DS1 combination - Per Mile			UNC1X	1L5XX	0.19										
	Interoffice Transport - Dedicated - DS1 combintion - Facility Termination per month			UNC1X	U1TF1	79.02	181.24	123.53	56.72	22.32		7.86				
	Channelization - Channel System DS1 to DS0 combination - per month			UNC1X	MQ1	113.33	57.26	14.74	1.86	1.67		7.86				
	2-wire ISDN COCI (BRITE) - DS1 to DS0 Channel System combination - per month			UNCNX	UC1CA	2.84	6.71	4.84				7.86				
	Additional 2-wire ISDN Loop in same DS1Interoffice Transport Combination - Zone 1		1	UNCNX	U1L2X	18.44	125.22	60.48	59.69	7.84		7.86				
	Additional 2-wire ISDN Loop in same DS1Interoffice Transport Combination - Zone 2		2	UNCNX	U1L2X	25.08	125.22	60.48	59.69	7.84		7.86				
	Additional 2-wire ISDN Loop in same DS1Interoffice Transport Combination - Zone 3		3	UNCNX	U1L2X	42.87	125.22	60.48	59.69	7.84		7.86				
	2-wire ISDN COCI (BRITE) - DS1 to DS0 Channel System combintaion- per month			UNCNX	UC1CA	2.84	6.71	4.84				7.86				
	Nonrecurring Currently Combined Network Elements Switch -As-Is Charge			UNC1X	UNCCC		8.98	8.98	11.17	11.17		7.86				
4-WIRE DS1 DIGITAL EXTENDED LOOP WITH DEDICATED STS-1 INTEROFFICE TRANSPORT (EEL)																
	First DS1 Loop in STS1 Interoffice Transport Combination - Zone 1		1	UNC1X	USLXX	86.47	210.70	114.60	63.96	17.97		7.86				
	First DS1 Loop in STS1 Interoffice Transport Combination - Zone 2		2	UNC1X	USLXX	114.10	210.70	114.60	63.96	17.97		7.86				
	First DS1 Loop in STS1 Interoffice Transport Combination - Zone 3		3	UNC1X	USLXX	297.76	210.70	114.60	63.96	17.97		7.86				
	Interoffice Transport - Dedicated - STS1 combination - Per Mile Per Month			UNCSX	1L5XX	4.09										
	Interoffice Transport - Dedicated - STS1 combination - Facility Termination			UNCSX	U1TFS	945.79	350.56	141.58	48.00	23.39		7.86				
	STS1 to DS1 Channel System conbination per month			UNCSX	MQ3	158.20	115.48	56.53	15.12	5.30		7.86				
	DS3 Interface Unit (DS1 COCI) combination per month			UNC1X	UC1D1	11.80	6.71	4.84				7.86				
	Additional DS1Loop in STS1 Interoffice Transport Combination - Zone 1		1	UNC1X	USLXX	86.47	210.70	114.60	63.96	17.97		7.86				
	Additional DS1Loop in STS1 Interoffice Transport Combination - Zone 2		2	UNC1X	USLXX	114.10	210.70	114.60	63.96	17.97		7.86				

CATEGORY	RATE ELEMENTS	Interim	Zone	BCS	USOC	RATES ($)					Svc Order Submitted Elec per LSR	Svc Order Submitted Manually per LSR	Attachment: 2		Exhibit: B	
													Incremental Charge - Manual Svc Order vs. Electronic-1st	Incremental Charge - Manual Svc Order vs. Electronic-Add'l	Incremental Charge - Manual Svc Order vs. Electronic-Disc 1st	Incremental Charge - Manual Svc Order vs. Electronic-Disc Add'l
						Rec	Nonrecurring		Nonrecurring Disconnect		OSS Rates($)					
							First	Add'l	First	Add'l	SOMEC	SOMAN	SOMAN	SOMAN	SOMAN	SOMAN
	Additional DS1Loop in STS1 Interoffice Transport Combination - Zone 3		3	UNC1X	USLXX	297.76	210.70	114.60	63.96	17.97		7.86				
	DS3 Interface Unit (DS1 COCI) combination per month			UNC1X	UC1D1	11.80	6.71	4.84				7.86				
	Nonrecurring Currently Combined Network Elements Switch -As-Is Charge			UNCSX	UNCCC		8.98	8.98	11.17	11.17		7.86				
4-WIRE 56 KBPS DIGITAL EXTENDED LOOP WITH 56 KBPS INTEROFFICE TRANSPORT (EEL)																
	4-wire 56 kbps Loop/4-wire 56 kbps Interoffice Transport Combination - Zone 1		1	UNCDX	UDL56	27.59	125.22	60.48	59.69	7.84		7.86				
	4-wire 56 kbps Loop/4-wire 56 kbps Interoffice Transport Combination - Zone 2		2	UNCDX	UDL56	32.48	125.22	60.48	59.69	7.84		7.86				
	4-wire 56 kbps Loop/4-wire 56 kbps Interoffice Transport Combination - Zone 3		3	UNCDX	UDL56	36.37	125.22	60.48	59.69	7.84		7.86				
	Interoffice Transport - Dedicated - 4-wire 56 kbps combination - Per Mile			UNCDX	1L5XX	0.01										
	Interoffice Transport - Dedicated - 4-wire 56 kbps combination - Facility Termination			UNCDX	U1TD5	17.25	98.09	53.67	56.31	22.42		7.86				
	Nonrecurring Currently Combined Network Elements Switch -As-Is Charge			UNCDX	UNCCC		8.98	8.98	11.17	11.17		7.86				
4-WIRE 64 KBPS DIGITAL EXTENDED LOOP WITH 64 KBPS INTEROFFICE TRANSPORT (EEL)																
	4-wire 64 kbps Loop/4-wire 64 kbps Interoffice Transport Combination - Zone 1		1	UNCDX	UDL64	27.59	125.22	60.48	59.69	7.84		7.86				
	4-wire 64 kbps Loop/4-wire 64 kbps Interoffice Transport Combination - Zone 2		2	UNCDX	UDL64	32.48	125.22	60.48	59.69	7.84		7.86				
	4-wire 64 kbps Loop/4-wire 64 kbps Interoffice Transport Combination - Zone 3		3	UNCDX	UDL64	36.37	125.22	60.48	59.69	7.84		7.86				
	Interoffice Transport - Dedicated - 4-wire 64 kbps combination - Per Mile			UNCDX	1L5XX	0.01										
	Interoffice Transport - Dedicated - 4-wire 64 kbps combination - Facility Termination			UNCDX	U1TD6	17.25	98.09	53.67	56.31	22.42		7.86				
	Nonrecurring Currently Combined Network Elements Switch -As-Is Charge			UNCDX	UNCCC		8.98	8.98	11.17	11.17		7.86				
ADDITIONAL NETWORK ELEMENTS																
When used as a part of a currently combined facility, the non-recurrng charges do not apply, but a Switch As Is charge does apply.																
When used as ordinarily combined network elements in All States, the non-recurring charges apply and the Switch As Is Charge does not.																
Nonrecurring Currently Combined Network Elements "Switch As Is" Charge (One applies to each combination)																
	Nonrecurring Currently Combined Network Elements Switch -As-Is Charge - 2 wire/4-Wire VG			UNCVX	UNCCC		8.98	8.98	11.17	11.17		7.86				
	Nonrecurring Currently Combined Network Elements Switch -As-Is Charge - 56/64 kbps			UNCDX	UNCCC		8.98	8.98	11.17	11.17		7.86				
	Nonrecurring Currently Combined Network Elements Switch -As-Is Charge - DS1			UNC1X	UNCCC		8.98	8.98	11.17	11.17		7.86				
	Nonrecurring Currently Combined Network Elements Switch -As-Is Charge - DS3			UNC3X	UNCCC		8.98	8.98	11.17	11.17		7.86				
	Nonrecurring Currently Combined Network Elements Switch -As-Is Charge - STS1			UNCSX	UNCCC		8.98	8.98	11.17	11.17		7.86				
NOTE: Local Channel - Dedicated Transport - minimum billing period - Below DS3=one month, DS3 and above=four months																
	Local Channel - Dedicated - 2-Wire Voice Grade			UNCVX	ULDV2	18.57	265.78	46.96	46.79	4.98		7.86				
	Local Channel - Dedicated - 4-Wire Voice Grade			UNCVX	ULDV4	19.86	266.48	47.65	47.54	5.73		7.86				
	Local Channel - Dedicated - DS1 per month Zone 1		1	UNC1X	ULDF1	40.46	209.60	176.51	30.21	21.07		7.86				
	Local Channel - Dedicated -DS1 Per Month Zone 2		2	UNC1X	ULDF1	43.39	209.60	176.51	30.21	21.07		7.86				
	Local Channel - Dedicated - DS1- Per Month Zone 3		3	UNC1X	ULDF1	164.50	209.60	176.51	30.21	21.07		7.86				
	Local Channel - Dedicated - DS3 - Per Mile per month			UNC3X	1L5NC	8.74										
	Local Channel - Dedicated - DS3 - Facility Termination			UNC3X	ULDF3	576.05	551.38	338.08	173.00	120.42		7.86				
	Local Channel - Dedicated - STS-1- Per Mile per month			UNCSX	1L5NC	8.74										
	Local Channel - Dedicated - STS-1 - Facility Termination			UNCSX	ULDFS	543.24	551.38	338.08	173.00	120.42		7.86				
	Clear Channel Capability (SF/ESF) Option - Subsequent Activity - per DS1	I		ULDD1, U1TD1, UNC1X, USL	NRCCC		65.04					7.86				
	C-bit Parity Option - Subsequent Activity - per DS3	i		U1TD3, ULDD3, UE3, UNC3X	NRCC3		50.04					7.86				

UNBUNDLED NETWORK ELEMENTS - Kentucky														Attachment: 2		Exhibit: B	
CATEGORY		RATE ELEMENTS	Interim	Zone	BCS	USOC	RATES ($)					Svc Order Submitted Elec per LSR	Svc Order Submitted Manually per LSR	Incremental Charge - Manual Svc Order vs. Electronic-1st	Incremental Charge - Manual Svc Order vs. Electronic-Add'l	Incremental Charge - Manual Svc Order vs. Electronic-Disc 1st	Incremental Charge - Manual Svc Order vs. Electronic-Disc Add'l
							Rec	Nonrecurring		Nonrecurring Disconnect		OSS Rates($)					
								First	Add'l	First	Add'l	SOMEC	SOMAN	SOMAN	SOMAN	SOMAN	SOMAN
	MULTIPLEXERS																
	NOTE: minimum billing period is one month for DS1 to DS0 Channel System and interfaces																
	NOTE: minimum billing period is three months for DS3 to DS1 Channel System and interfaces																
		DS1 to DS0 Channel System (with the higher-level connected to a collocation in the same SWC) per month			UXTD1	MQ1	113.33	101.40	71.60	13.79	13.04		7.86				
		DS1 to DS0 Channel System (used to channelize a DS1 Local Channel) per month			ULDD1	MQ1	113.33	101.40	71.60	13.79	13.04		7.86				
		DS1 to DS0 Channel System (used to channelize a DS1 Interoffice Channel) per month			U1TD1	MQ1	113.33	101.40	71.60	13.79	13.04		7.86				
		OCU-DP COCI (data) - DS1 to DS0 Channel System - per month (2.4-64kbs) used for a Local Loop			UDL	1D1DD	1.32	10.07	7.08				7.86				
		OCU-DP COCI (data) - DS1 to DS0 Channel System - per month (2.4-64kbs) used for connection to a channelized DS1 Local Channel in the same SWC as collocation			U1TUD	1D1DD	1.32	10.07	7.08				7.86				
		2-wire ISDN COCI (BRITE) - DS1 to DS0 Channel Systsem - per month for a Local Loop			UDN	UC1CA	2.84	10.07	7.08				7.86				
		2-wire ISDN COCI (BRITE) - DS1 to DS0 Channel Systsem - per month used for connection to a channelized DS1 Local Channel in the same SWC as collocation			U1TUB	UC1CA	2.84	10.07	7.08				7.86				
		Voice Grade COCI - DS1 to DS0 Channel System - per month used for a Local Loop			UEA	1D1VG	0.6228	10.07	7.08				7.86				
		Voice Grade COCI - DS1 to DS0 Channel System - per month used for connection to a channelized DS1 Local Channel in the same SWC as collocation			U1TUC	1D1VG	0.6228	10.07	7.08				7.86				
		DS3 to DS1 Channel System (with the higher level connected to a collocation in the same SWC) per month			UXTD3	MQ3	158.20	199.23	118.62	50.16	48.59		7.86				
		DS3 to DS1 Channel System (used to channelize a DS3 Local Channel) per month			ULDD3	MQ3	158.20	199.23	118.62	50.16	48.59		7.86				
		DS3 to DS1 Channel System (used to channelize a DS3 Interoffice Channel per month			U1TD3	MQ3	158.20	199.23	118.62	50.16	48.59		7.86				
		STS-1 to DS1 Channel System (with the higher level connected to a collocation in the same SWC) per month			UXTS1	MQ3	158.20	199.23	118.62	50.16	48.59		7.86				
		STS-1 to DS1 Channel System (used to channelize a STS-1 Local Channel) per month			ULDS1	MQ3	158.20	199.23	118.62	50.16	48.59		7.86				
		STS-1 to DS1 Channel System (used to channelize a STS-1 Interoffice Channel) per month			U1TS1	MQ3	158.20	199.23	118.62	50.16	48.59		7.86				
		DS1 COCI used with Loop per month			USL	UC1D1	11.80	10.07	7.08				7.86				
		DS1 COCI (used for connection to a channelized DS1 Local Channel in the same SWC as collocation) per month			U1TUA	UC1D1	11.80	10.07	7.08				7.86				
		DS1 COCI used with Interoffice Channel per month			U1TD1	UC1D1	11.80	10.07	7.08				7.86				
	Sub-Loop Feeder																
		Unbundled Sub-Loop Feeder Loop, 4-Wire DS1 - Zone 1		1	UNC1X	USBFG	62.57	125.43	73.68	81.82	21.56						
		Unbundled Sub-Loop Feeder Loop, 4-Wire DS1 - Zone 2		2	UNC1X	USBFG	87.71	125.43	73.68	81.82	21.56						
		Unbundled Sub-Loop Feeder Loop, 4-Wire DS1 - Zone 3		3	UNC1X	USBFG	273.33	125.43	73.68	81.82	21.56						
UNBUNDLED LOCAL EXCHANGE SWITCHING(PORTS)																	
	Exchange Ports																
	NOTE: Although the Port Rate includes all available features in GA, KY, LA & TN, the desired features will need to be ordered using retail USOCs																
	2-WIRE VOICE GRADE LINE PORT RATES (RES)																
		Exchange Ports - 2-Wire Analog Line Port- Res.			UEPSR	UEPRL	1.49	3.74	3.63	2.23	2.13		7.86				
		Exchange Ports - 2-Wire Analog Line Port with Caller ID - Res.			UEPSR	UEPRC	1.49	3.74	3.63	2.23	2.13		7.86				
		Exchange Ports - 2-Wire Analog Line Port outgoing only - Res.			UEPSR	UEPRO	1.49	3.74	3.63	2.23	2.13		7.86				
		Exchange Ports - 2-Wire VG unbundled KY extended local dialing parity Port with Caller ID - Res.			UEPSR	UEPRM	1.49	3.74	3.63	2.23	2.13		7.86				
		Exchange Ports - 2-Wire VG unbundled res, low usage line port with Caller ID (LUM)			UEPSR	UEPAP	1.49	3.74	3.63	2.23	2.13		7.86				
		Exchange Ports - 2-Wire Voice Kentucky Residence Dialing Plan without Caller ID			UEPSR	UEPWE	1.49	3.74	3.63	2.23	2.13		7.86				

CATEGORY	RATE ELEMENTS	Interim	Zone	BCS	USOC	RATES ($)					Svc Order Submitted Elec per LSR	Svc Order Submitted Manually per LSR	Attachment: 2 Incremental Charge - Manual Svc Order vs. Electronic-1st	Attachment: 2 Incremental Charge - Manual Svc Order vs. Electronic-Add'l	Exhibit: B Incremental Charge - Manual Svc Order vs. Electronic-Disc 1st	Exhibit: B Incremental Charge - Manual Svc Order vs. Electronic-Disc Add'l
						Rec	Nonrecurring		Nonrecurring Disconnect				OSS Rates($)			
							First	Add'l	First	Add'l	SOMEC	SOMAN	SOMAN	SOMAN	SOMAN	SOMAN
	2-Wire voice unbundled Low Usage Line Port without Caller ID Capability			UEPSR	UEPRT	1.49	3.74	3.63	2.23	2.13		7.86				
	Subsequent Activity			UEPSR	USASC	0.00	0.00	0.00				7.86				
FEATURES																
	All Available Vertical Features			UEPSR	UEPVF	0.00	0.00	0.00				7.86				
2-WIRE VOICE GRADE LINE PORT RATES (BUS)																
	Exchange Ports - 2-Wire Analog Line Port without Caller ID - Bus			UEPSB	UEPBL	1.49	3.74	3.63	2.23	2.13		7.86				
	Exchange Ports - 2-Wire VG unbundled Line Port with unbundled port with Caller+E484 ID - Bus.			UEPSB	UEPBC	1.49	3.74	3.63	2.23	2.13		7.86				
	Exchange Ports - 2-Wire Analog Line Port outgoing only - Bus.			UEPSB	UEPBO	1.49	3.74	3.63	2.23	2.13		7.86				
	Exchange Ports - 2-Wire VG unbundled KY extended local dialing parity Port with Caller ID - Bus.			UEPSB	UEPBM	1.49	3.74	3.63	2.23	2.13		7.86				
	Exhange Ports - 2-Wire VG unbundled incoming only port with Caller ID - Bus			UEPSB	UEPB1	1.49	3.74	3.63	2.23	2.13		7.86				
	Exchange Ports - 2-Wire Voice Kentucky Business Dialing Plan without Caller ID			UEPSB	UEPWF	1.49	3.74	3.63	2.23	2.13		7.86				
	2-Wire voice unbundled Incoming Only Port without Caller ID Capability			UEPSB	UEPBE	1.49	3.74	3.63	2.23	2.13		7.86				
	Subsequent Activity			UEPSB	USASC	0.00	0.00	0.00				7.86				
FEATURES																
	All Available Vertical Features			UEPSB	UEPVF	0.00	0.00	0.00				7.86				
EXCHANGE PORT RATES (DID & PBX)																
	2-Wire VG Unbundled 2-Way PBX Trunk - Res			UEPSE	UEPRD	1.49	39.05	18.17	15.38	0.89		7.86				
	2-Wire VG Line Side Unbundled 2-Way PBX Trunk - Bus			UEPSP	UEPPC	1.49	39.05	18.17	15.38	0.89		7.86				
	2-Wire VG Line Side Unbundled Outward PBX Trunk - Bus			UEPSP	UEPPO	1.49	39.05	18.17	15.38	0.89		7.86				
	2-Wire VG Line Side Unbundled Incoming PBX Trunk - Bus			UEPSP	UEPP1	1.49	39.05	18.17	15.38	0.89		7.86				
	2-Wire Analog Long Distance Terminal PBX Trunk - Bus			UEPSP	UEPLD	1.49	39.05	18.17	15.38	0.89		7.86				
	2-Wire Voice Unbundled PBX LD Terminal Ports			UEPSP	UEPLD	1.49	39.05	18.17	15.38	0.89		7.86				
	2-Wire Vice Unbundled 2-Way PBX Usage Port			UEPSP	UEPXA	1.49	39.05	18.17	15.38	0.89		7.86				
	2-Wire Voice Unbundled PBX Toll Terminal Hotel Ports			UEPSP	UEPXB	1.49	39.05	18.17	15.38	0.89		7.86				
	2-Wire Voice Unbundled PBX LD DDD Terminals Port			UEPSP	UEPXC	1.49	39.05	18.17	15.38	0.89		7.86				
	2-Wire Voice Unbundled PBX LD Terminal Switchboard Port			UEPSP	UEPXD	1.49	39.05	18.17	15.38	0.89		7.86				
	2-Wire Voice Unbundled PBX LD Terminal Switchboard IDD Capable Port			UEPSP	UEPXE	1.49	39.05	18.17	15.38	0.89		7.86				
	2-Wire Voice Unbundled 2-Way PBX Kentucky Room Area Calling Port Without LUD			UEPSP	UEPXF	1.49	39.05	18.17	15.38	0.89		7.86				
	2-Wire Voice Unbundled PBX Kentucky LUD Area Calling Port			UEPSP	UEPXG	1.49	39.05	18.17	15.38	0.89		7.86				
	2-Wire Voice Unbundled PBX Kentucky Premium Callling Port			UEPSP	UEPXH	1.49	39.05	18.17	15.38	0.89		7.86				
	2-Wire Voice Unbundled 2-Way PBX Kentucky Area Callling Port Without LUD			UEPSP	UEPXJ	1.49	39.05	18.17	15.38	0.89		7.86				
	2-Wire Voice Unbundled 2-Way PBX Hotel/Hospital Economy Administrative Calling Port			UEPSP	UEPXL	1.49	39.05	18.17	15.38	0.89		7.86				
	2-Wire Voice Unbundled 2-Way PBX Hotel/Hospital Economy Room Calling Port			UEPSP	UEPXM	1.49	39.05	18.17	15.38	0.89		7.86				
	2-Wire Voice Unbundled 1-Way Outgoing PBX Hotel/Hospital Discount Room Calling Port			UEPSP	UEPXO	1.49	39.05	18.17	15.38	0.89		7.86				
	2-Wire Voice Unbundled 1-Way Outgoing PBX Measured Port			UEPSP	UEPXS	1.49	39.05	18.17	15.38	0.89		7.86				
	Subsequent Activity			UEPSP	USASC	0.00	0.00	0.00				7.86				
FEATURES																
	All Available Vertical Features			UEPSP UEPSE	UEPVF	0.00	0.00	0.00				7.86				
EXCHANGE PORT RATES (COIN)																
	Exchange Ports - Coin Port					1.49	3.74	3.63	2.23	2.13		7.86				
Local Switching Features offered with Port																
NOTE: Transmission/usage charges associated with POTS circuit switched usage will also apply to circuit switched voice and/or circuit switched data transmission by B-Channels associated with 2-wire ISDN ports.																
NOTE: Access to B Channel or D Channel Packet capabilities will be available only through BFR/New Business Request Process. Rates for the packet capabilities will be determined via the Bona Fide Request/New Business Request Process.																
	Exchange port - 4-wire ISDN trunk port -all available features included				UEPEX	101.60	188.36	95.15	61.92	22.67		7.86				

UNBUNDLED NETWORK ELEMENTS - Kentucky														Attachment: 2		Exhibit: B	
CATEGORY	RATE ELEMENTS	Interim	Zone	BCS	USOC	RATES ($)					Svc Order Submitted Elec per LSR	Svc Order Submitted Manually per LSR	Incremental Charge - Manual Svc Order vs. Electronic-1st	Incremental Charge - Manual Svc Order vs. Electronic-Add'l	Incremental Charge - Manual Svc Order vs. Electronic-Disc 1st	Incremental Charge - Manual Svc Order vs. Electronic-Disc Add'l
						Rec	Nonrecurring		Nonrecurring Disconnect				OSS Rates($)			
							First	Add'l	First	Add'l	SOMEC	SOMAN	SOMAN	SOMAN	SOMAN	SOMAN
UNBUNDLED LOCAL EXCHANGE SWITCHING(PORTS)																
EXCHANGE PORT RATES																
Exchange Ports - 2-Wire DID Port				UEPEX	UEPP2	10.51	92.18	15.82	52.16	5.30		7.86				
Exchange Ports - DDITS Port - 4-Wire DS1 Port with DID capability				UEPDD	UEPDD	74.77	164.86	77.74	60.69	3.86		7.86				
Exchange Ports - 2-Wire ISDN Port (See Notes below.)				UEPTX UEPSX	U1PMA	13.46	60.60	50.67	32.83	14.17		7.86				
All Features Offered				UEPTX UEPSX	UEPVF	0.00	0.00	0.00								
NOTE: Transmission/usage charges associated with POTS circuit switched usage will also apply to circuit switched voice and/or circuit switched data transmission by B-Channels associated with 2-wire ISDN ports.																
NOTE: Access to B Channel or D Channel Packet capabilities will be available only through BFR/New Business Request Process. Rates for the packet capabilities will be determined via the Bona Fide Request/New Business Request Process.																
Exchange Ports - 2-Wire ISDN Port -- Channel Profiles				UEPTX UEPSX	U1UMA	0.00	0.00	0.00								
Exchange Ports - 4-Wire ISDN DS1 Port				UEPEX	UEPEX	101.60	188.36	95.15	61.92	22.67		7.86				
UNBUNDLED PORT with REMOTE CALL FORWARDING CAPABILITY																
UNBUNDLED REMOTE CALL FORWARDING SERVICE - RESIDENCE																
Unbundled Remote Call Forwarding Service, Area Calling, Res				UEPVR	UERAC	1.49	3.74	3.63				7.86				
Unbundled Remote Call Forwarding Service, Local Calling - Res				UEPVR	UERLC	1.49	3.74	3.63				7.86				
Unbundled Remote Call Forwarding Service, InterLATA - Res				UEPVR	UERTE	1.49	3.74	3.63				7.86				
Unbundled Remote Call Forwarding Service, IntraLATA - Res				UEPVR	UERTR	1.49	3.74	3.63				7.86				
Non-Recurring																
Unbundled Remote Call Forwarding Service - Conversion - Switch-as-is				UEPVR	USAC2		0.10	0.10				7.86				
Unbundled Remote Call Forwarding Service - Conversion with allowed change (PIC and LPIC)				UEPVR	USACC		0.10	0.10								
UNBUNDLED REMOTE CALL FORWARDING - Bus																
Unbundled Remote Call Forwarding Service, Area Calling - Bus				UEPVB	UERAC	1.49	3.74	3.63				7.86				
Unbundled Remote Call Forwarding Service, Local Calling - Bus				UEPVB	UERLC	1.49	3.74	3.63				7.86				
Unbundled Remote Call Forwarding Service, InterLATA - Bus				UEPVB	UERTE	1.49	3.74	3.63				7.86				
Unbundled Remote Call Forwarding Service, IntraLATA - Bus				UEPVB	UERTR	1.49	3.74	3.63				7.86				
Unbundled Remote Call Forwarding Service Expanded and Exception Local Calling				UEPVB	UERVJ	1.49	3.74	3.63				7.86				
Non-Recurring																
Unbundled Remote Call Forwarding Service - Conversion - Switch-as-is				UEPVB	USAC2		0.10	0.10				7.86				
Unbundled Remote Call Forwarding Service - Conversion with allowed change (PIC and LPIC)				UEPVB	USACC		0.10	0.10								
UNBUNDLED LOCAL SWITCHING, PORT USAGE																
End Office Switching (Port Usage)																
End Office Switching Function, Per MOU						0.0011971										
End Office Trunk Port - Shared, Per MOU						0.0002112										
Tandem Switching (Port Usage) (Local or Access Tandem)																
Tandem Switching Function Per MOU						0.000194										
Tandem Trunk Port - Shared, Per MOU						0.0002416										
Common Transport																
Common Transport - Per Mile, Per MOU						0.000003										
Common Transport - Facilities Termination Per MOU						0.0007466										
UNBUNDLED PORT/LOOP COMBINATIONS - COST BASED RATES																
Cost Based Rates are applied where BellSouth is required by FCC and/or State Commission rule to provide Unbundled Local Switching or Switch Ports.																
Features shall apply to the Unbundled Port/Loop Combination - Cost Based Rate section in the same manner as they are applied to the Stand-Alone Unbundled Port section of this Rate Exhibit.																
End Office and Tandem Switching Usage and Common Transport Usage rates in the Port section of this rate exhibit shall apply to all combinations of loop/port network elements except for UNE Coin Port/Loop Combinations.																
The first and additional Port nonrecurring charges apply to Not Currently Combined Combos. For Currently Combined Combos the nonrecurring charges shall be those identified in the Nonrecurring - Currently Combined sections.																
2-WIRE VOICE GRADE LOOP WITH 2-WIRE LINE PORT (RES)																
UNE Port/Loop Combination Rates																
2-Wire VG Loop/Port Combo - Zone 1			1			10.79										
2-Wire VG Loop/Port Combo - Zone 2			2			15.52										
2-Wire VG Loop/Port Combo - Zone 3			3			31.74										
UNE Loop Rates																
2-Wire Voice Grade Loop (SL1) - Zone 1			1	UEPRX	UEPLX	9.64										

UNBUNDLED NETWORK ELEMENTS - Kentucky														Attachment: 2		Exhibit: B	
CATEGORY	RATE ELEMENTS	Interim	Zone	BCS	USOC	RATES ($)					Svc Order Submitted Elec per LSR	Svc Order Submitted Manually per LSR	Incremental Charge - Manual Svc Order vs. Electronic-1st	Incremental Charge - Manual Svc Order vs. Electronic-Add'l	Incremental Charge - Manual Svc Order vs. Electronic-Disc 1st	Incremental Charge - Manual Svc Order vs. Electronic-Disc Add'l
						Rec	Nonrecurring		Nonrecurring Disconnect		OSS Rates($)					
							First	Add'l	First	Add'l	SOMEC	SOMAN	SOMAN	SOMAN	SOMAN	SOMAN
	2-Wire Voice Grade Loop (SL1) - Zone 2		2	UEPRX	UEPLX	14.37										
	2-Wire Voice Grade Loop (SL1) - Zone 3		3	UEPRX	UEPLX	30.59										
2-Wire Voice Grade Line Port Rates (Res)																
	2-Wire voice unbundled port - residence			UEPRX	UEPRL	1.15	21.29	15.49	2.85	2.67		7.86				
	2-Wire voice unbundled port with Caller ID - res			UEPRX	UEPRC	1.15	21.29	15.49	2.85	2.67		7.86				
	2-Wire voice unbundled port outgoing only - res			UEPRX	UEPRO	1.15	21.29	15.49	2.85	2.67		7.86				
	2-Wire voice Grade unbundled Kentucky extended local dialing parity port with Caller ID - res			UEPRX	UEPRM	1.15	21.29	15.49	2.85	2.67		7.86				
	2-Wire voice unbundles res, low usage line port with Caller ID (LUM)			UEPRX	UEPAP	1.15	21.29	15.49	2.85	2.67		7.86				
	2-Wire Voice Unbundled Kentucky Residence Dialing Plan without Caller ID			UEPRX	UEPWE	1.15	21.29	15.49	2.85	2.67		7.86				
	2-Wire voice unbundled Low Usage Line Port without Caller ID Capability			UEPRX	UEPRT	1.15	21.29	15.49	2.85	2.67		7.86				
FEATURES																
	All Features Offered			UEPRX	UEPVF	0.00	0.00	0.00				7.86				
LOCAL NUMBER PORTABILITY																
	Local Number Portability (1 per port)			UEPRX	LNPCX	0.35										
NONRECURRING CHARGES (NRCs) - CURRENTLY COMBINED																
	2-Wire Voice Grade Loop / Line Port Combination - Conversion - Switch-as-is			UEPRX	USAC2		0.10	0.10				7.86				
	2-Wire Voice Grade Loop / Line Port Combination - Conversion - Switch with change			UEPRX	USACC		0.10	0.10				7.86				
ADDITIONAL NRCs																
	2-Wire Voice Grade Loop/Line Port Combination - Subsequent Activity			UEPRX	USAS2	0.00	0.00	0.00				7.86				
2-WIRE VOICE GRADE LOOP WITH 2-WIRE LINE PORT (BUS)																
UNE Port/Loop Combination Rates																
	2-Wire VG Loop/Port Combo - Zone 1		1			10.79										
	2-Wire VG Loop/Port Combo - Zone 2		2			15.52										
	2-Wire VG Loop/Port Combo - Zone 3		3			31.74										
UNE Loop Rates																
	2-Wire Voice Grade Loop (SL1) - Zone 1		1	UEPBX	UEPLX	9.64										
	2-Wire Voice Grade Loop (SL1) - Zone 2		2	UEPBX	UEPLX	14.37										
	2-Wire Voice Grade Loop (SL1) - Zone 3		3	UEPBX	UEPLX	30.59										
2-Wire Voice Grade Line Port (Bus)																
	2-Wire voice unbundled port without Caller ID - bus			UEPBX	UEPBL	1.15	21.29	15.49	2.85	2.67		7.86				
	2-Wire voice unbundled port with Caller + E484 ID - bus			UEPBX	UEPBC	1.15	21.29	15.49	2.85	2.67		7.86				
	2-Wire voice unbundled port outgoing only - bus			UEPBX	UEPBO	1.15	21.29	15.49	2.85	2.67		7.86				
	2-Wire voice Grade unbundled Kentucky extended local dialing parity port with Caller ID - bus			UEPBX	UEPBM	1.15	21.29	15.49	2.85	2.67		7.86				
	2-Wire voice unbundled incoming only port with Caller ID - Bus			UEPBX	UEPB1	1.15	21.29	15.49	2.85	2.67		7.86				
	2-Wire Voice Unbundled Kentucky Business Dialing Plan without Caller ID			UEPBX	UEPWF	1.15	21.29	15.49	2.85	2.67		7.86				
	2-Wire voice unbundled Incoming Only Port without Caller ID Capability			UEPBX	UEPBE	1.15	21.29	15.49	2.85	2.67		7.86				
LOCAL NUMBER PORTABILITY																
	Local Number Portability (1 per port)			UEPBX	LNPCX	0.35										
FEATURES																
	All Features Offered			UEPBX	UEPVF	0.00	0.00	0.00				7.86				
NONRECURRING CHARGES (NRCs) - CURRENTLY COMBINED																
	2-Wire Voice Grade Loop / Line Port Combination - Conversion - Switch-as-is			UEPBX	USAC2		0.10	0.10				7.86				
	2-Wire Voice Grade Loop / Line Port Combination - Conversion - Switch with change			UEPBX	USACC		0.10	0.10				7.86				
ADDITIONAL NRCs																
	2-Wire Voice Grade Loop/Line Port Combination - Subsequent Activity			UEPBX	USAS2		0.00	0.00				7.86				
2-WIRE VOICE GRADE LOOP WITH 2-WIRE LINE PORT (RES - PBX)																

UNBUNDLED NETWORK ELEMENTS - Kentucky														Attachment: 2		Exhibit: B	
CATEGORY	RATE ELEMENTS	Interim	Zone	BCS	USOC	RATES ($)					Svc Order Submitted Elec per LSR	Svc Order Submitted Manually per LSR	Incremental Charge - Manual Svc Order vs. Electronic-1st	Incremental Charge - Manual Svc Order vs. Electronic-Add'l	Incremental Charge - Manual Svc Order vs. Electronic-Disc 1st	Incremental Charge - Manual Svc Order vs. Electronic-Disc Add'l
						Rec	Nonrecurring		Nonrecurring Disconnect		OSS Rates($)					
							First	Add'l	First	Add'l	SOMEC	SOMAN	SOMAN	SOMAN	SOMAN	SOMAN
UNE Port/Loop Combination Rates																
	2-Wire VG Loop/Port Combo - Zone 1		1			10.79										
	2-Wire VG Loop/Port Combo - Zone 2		2			15.52										
	2-Wire VG Loop/Port Combo - Zone 3		3			31.74										
UNE Loop Rates																
	2-Wire Voice Grade Loop (SL 1) - Zone 1		1	UEPRG	UEPLX	9.64										
	2-Wire Voice Grade Loop (SL 1) - Zone 2		2	UEPRG	UEPLX	14.37										
	2-Wire Voice Grade Loop (SL 1) - Zone 3		3	UEPRG	UEPLX	30.59										
2-Wire Voice Grade Line Port Rates (RES - PBX)																
	2-Wire VG Unbundled Combination 2-Way PBX Trunk Port - Res			UEPRG	UEPRD	1.15	21.29	15.49	2.85	2.67		7.86				
LOCAL NUMBER PORTABILITY																
	Local Number Portability (1 per port)			UEPRG	LNPCP	3.15	0.00	0.00				7.86				
FEATURES																
	All Features Offered			UEPRG	UEPVF	0.00	0.00	0.00				7.86				
NONRECURRING CHARGES (NRCs) - CURRENTLY COMBINED																
	2-Wire Voice Grade Loop/ Line Port Combination (PBX) - Conversion - Switch-As-Is			UEPRG	USAC2		8.45	1.91				7.86				
	2-Wire Voice Grade Loop/ Line Port Combination (PBX) - Conversion - Switch with Change			UEPRG	USACC		8.45	1.91				7.86				
ADDITIONAL NRCs																
	2-Wire Voice Grade Loop/ Line Port Combination (PBX) - Subsequent Activity			UEPRG	USAS2	0.00	0.00	0.00				7.86				
	PBX Subsequent Activity - Change/Rearrange Multiline Hunt Group						7.86	7.86				7.86				
2-WIRE VOICE GRADE LOOP WITH 2-WIRE LINE PORT (BUS - PBX)																
UNE Port/Loop Combination Rates																
	2-Wire VG Loop/Port Combo - Zone 1		1			10.79										
	2-Wire VG Loop/Port Combo - Zone 2		2			15.52										
	2-Wire VG Loop/Port Combo - Zone 3		3			31.74										
UNE Loop Rates																
	2-Wire Voice Grade Loop (SL 1) - Zone 1		1	UEPPX	UEPLX	9.64										
	2-Wire Voice Grade Loop (SL 1) - Zone 2		2	UEPPX	UEPLX	14.37										
	2-Wire Voice Grade Loop (SL 1) - Zone 3		3	UEPPX	UEPLX	30.59										
2-Wire Voice Grade Line Port Rates (BUS - PBX)																
	Line Side Unbundled Combination 2-Way PBX Trunk Port - Bus			UEPPX	UEPPC	1.15	21.29	15.49	2.85	2.67		7.86				
	Line Side Unbundled Outward PBX Trunk Port - Bus			UEPPX	UEPPO	1.15	21.29	15.49	2.85	2.67		7.86				
	Line Side Unbundled Incoming PBX Trunk Port - Bus			UEPPX	UEPP1	1.15	21.29	15.49	2.85	2.67		7.86				
	2-Wire Voice Unbundled PBX LD Terminal Ports			UEPPX	UEPLD	1.15	21.29	15.49	2.85	2.67		7.86				
	2-Wire Voice Unbundled 2-Way Combination PBX Usage Port			UEPPX	UEPXA	1.15	21.29	15.49	2.85	2.67		7.86				
	2-Wire Voice Unbundled PBX Toll Terminal Hotel Ports			UEPPX	UEPXB	1.15	21.29	15.49	2.85	2.67		7.86				
	2-Wire Voice Unbundled PBX LD DDD Terminals Port			UEPPX	UEPXC	1.15	21.29	15.49	2.85	2.67		7.86				
	2-Wire Voice Unbundled PBX LD Terminal Switchboard Port			UEPPX	UEPXD	1.15	21.29	15.49	2.85	2.67		7.86				
	2-Wire Voice Unbundled PBX LD Terminal Switchboard IDD Capable Port			UEPPX	UEPXE	1.15	21.29	15.49	2.85	2.67		7.86				
	2-Wire Voice Unbundled 2-Way PBX Kentucky Room Area Calling Port without LUD			UEPPX	UEPXF	1.15	21.29	15.49	2.85	2.67		7.86				
	2-Wire Voice Unbundled PBX Kentucky LUD Area Calling Port			UEPPX	UEPXG	1.15	21.29	15.49	2.85	2.67		7.86				
	2-Wire Voice Unbundled PBX Kentucky Premium Calling Port			UEPPX	UEPXH	1.15	21.29	15.49	2.85	2.67		7.86				
	2-Wire Voice Unbundled 2-Way Kentucky Area Calling Port without LUD			UEPPX	UEPXJ	1.15	21.29	15.49	2.85	2.67		7.86				
	2-Wire Voice Unbundled 2-Way PBX Hotel/Hospital Economy Administrative Calling Port			UEPPX	UEPXL	1.15	21.29	15.49	2.85	2.67		7.86				
	2-Wire Voice Unbundled 2-Way PBX Hotel/Hospital Economy Room Calling Port			UEPPX	UEPXM	1.15	21.29	15.49	2.85	2.67		7.86				
	2-Wire Voice Unbundled 1-Way Outgoing PBX Hotel/Hospital Discount Room Calling Port			UEPPX	UEPXO	1.15	21.29	15.49	2.85	2.67		7.86				
	2-Wire Voice Unbundled 1-Way Outgoing PBX Measured Port			UEPPX	UEPXS	1.15	21.29	15.49	2.85	2.67		7.86				

UNBUNDLED NETWORK ELEMENTS - Kentucky													Attachment: 2		Exhibit: B	
CATEGORY	RATE ELEMENTS	Interim	Zone	BCS	USOC	RATES ($)					Svc Order Submitted Elec per LSR	Svc Order Submitted Manually per LSR	Incremental Charge - Manual Svc Order vs. Electronic-1st	Incremental Charge - Manual Svc Order vs. Electronic-Add'l	Incremental Charge - Manual Svc Order vs. Electronic-Disc 1st	Incremental Charge - Manual Svc Order vs. Electronic-Disc Add'l
						Rec	Nonrecurring		Nonrecurring Disconnect		OSS Rates($)					
							First	Add'l	First	Add'l	SOMEC	SOMAN	SOMAN	SOMAN	SOMAN	SOMAN
LOCAL NUMBER PORTABILITY																
	Local Number Portability (1 per port)			UEPPX	LNPCP	3.15	0.00	0.00								
FEATURES																
	All Features Offered			UEPPX	UEPVF	0.00	0.00	0.00				7.86				
NONRECURRING CHARGES (NRCs) - CURRENTLY COMBINED																
	2-Wire Voice Grade Loop/ Line Port Combination (PBX) - Conversion - Switch-As-Is			UEPPX	USAC2		8.45	1.91				7.86				
	2-Wire Voice Grade Loop/ Line Port Combination (PBX) - Conversion - Switch with Change			UEPPX	USACC		8.45	1.91				7.86				
ADDITIONAL NRCs																
	2-Wire Voice Grade Loop/ Line Port Combination (PBX) - Subsequent Activity			UEPPX	USAS2	0.00	0.00	0.00				7.86				
	PBX Subsequent Activity - Change/Rearrange Multiline Hunt Group						7.86	7.86				7.86				
2-WIRE VOICE GRADE LOOP WITH 2-WIRE ANALOG LINE COIN PORT																
UNE Port/Loop Combination Rates																
	2-Wire VG Coin Port/Loop Combo – Zone 1		1			10.79										
	2-Wire VG Coin Port/Loop Combo – Zone 2		2			15.52										
	2-Wire VG Coin Port/Loop Combo – Zone 3		3			31.74										
UNE Loop Rates																
	2-Wire Voice Grade Loop (SL1) - Zone 1		1	UEPCO	UEPLX	9.64										
	2-Wire Voice Grade Loop (SL1) - Zone 2		2	UEPCO	UEPLX	14.37										
	2-Wire Voice Grade Loop (SL1) - Zone 3		3	UEPCO	UEPLX	30.59										
2-Wire Voice Grade Line Ports (COIN)																
	2-Wire Coin 2-Way without Operator Screening and without Blocking (AL, KY, LA, MS)			UEPCO	UEPRF	1.15	21.29	15.49	2.85	2.67		7.86				
	2-Wire Coin 2-Way with Operator Screening (AL, KY)			UEPCO	UEPRE	1.15	21.29	15.49	2.85	2.67		7.86				
	2-Wire Coin 2-Way with Operator Screening and Blocking: 011, 900/976, 1+DDD (AL, KY, LA, MS)			UEPCO	UEPRA	1.15	21.29	15.49	2.85	2.67		7.86				
	2-Wire Coin 2-Way with Operator Screening and 011 Blocking (KY)			UEPCO	UEPKA	1.15	21.29	15.49	2.85	2.67		7.86				
	2-Wire Coin 2-Way with Operator Screening & Blocking: 900/976, 1+DDD, 011+, & Local (AL, KY, LA, MS)			UEPCO	UEPCD	1.15	21.29	15.49	2.85	2.67		7.86				
	2-Wire Coin Outward without Blocking and without Operator Screening (KY, LA, MS)			UEPCO	UEPRN	1.15	21.29	15.49	2.85	2.67		7.86				
	2-Wire Coin Outward with Operator Screening and 011 Blocking (GA, KY, MS)			UEPCO	UEPRJ	1.15	21.29	15.49	2.85	2.67		7.86				
	2-Wire Coin Outward with Operator Screening and Blocking: 011, 900/976, 1+DDD (AL, KY, LA, MS)			UEPCO	UEPRH	1.15	21.29	15.49	2.85	2.67		7.86				
	2-Wire Coin Outward Operator Screening & Blocking: 900/976, 1+DDD, 011+, and Local (AL, KY, LA, MS)			UEPCO	UEPCN	1.15	21.29	15.49	2.85	2.67		7.86				
	2-Wire 2-Way Smartline with 900/976 (all states except LA)			UEPCO	UEPCK	1.15	21.29	15.49	2.85	2.67		7.86				
	2-Wire Coin Outward Smartline with 900/976 (all states except LA)			UEPCO	UEPCR	1.15	21.29	15.49	2.85	2.67		7.86				
ADDITIONAL UNE COIN PORT/LOOP (RC)																
	UNE Coin Port/Loop Combo Usage (Flat Rate)			UEPCO	URECU	2.57	0.00	0.00	0.00	0.00						
LOCAL NUMBER PORTABILITY																
	Local Number Portability (1 per port)			UEPCO	LNPCX	0.35										
NONRECURRING CHARGES - CURRENTLY COMBINED																
	2-Wire Voice Grade Loop / Line Port Combination - Conversion - Switch-as-is			UEPCO	USAC2		0.10	0.10				7.86				
	2-Wire Voice Grade Loop / Line Port Combination - Conversion - Switch with change			UEPCO	USACC		0.10	0.10				7.86				
ADDITIONAL NRCs																
	2-Wire Voice Grade Loop/Line Port Combination - Subsequent Activity			UEPCO	USAS2		0.00	0.00				7.86				
2-WIRE VOICE LOOP/ 2WIRE VOICE GRADE IO TRANSPORT/ 2-WIRE LINE PORT (RES)																
UNE Port/Loop Combination Rates																
	2-Wire VG Loop/IO Tranport/Port Combo - Zone 1		1			13.90										

CATEGORY	RATE ELEMENTS	Interim	Zone	BCS	USOC	RATES ($)					Svc Order Submitted Elec per LSR	Svc Order Submitted Manually per LSR	Attachment: 2		Exhibit: B	
													Incremental Charge - Manual Svc Order vs. Electronic-1st	Incremental Charge - Manual Svc Order vs. Electronic-Add'l	Incremental Charge - Manual Svc Order vs. Electronic-Disc 1st	Incremental Charge - Manual Svc Order vs. Electronic-Disc Add'l
						Rec	Nonrecurring		Nonrecurring Disconnect		OSS Rates($)					
							First	Add'l	First	Add'l	SOMEC	SOMAN	SOMAN	SOMAN	SOMAN	SOMAN
	2-Wire VG Loop/IO Tranport/Port Combo - Zone 2		2			18.68										
	2-Wire VG Loop/IO Tranport/Port Combo - Zone 3		3			34.45										
UNE Loop Rates																
	2-Wire Voice Grade Loop (SL2) - Zone 1		1	UEPFR	UECF2	12.67										
	2-Wire Voice Grade Loop (SL2) - Zone 2		2	UEPFR	UECF2	17.45										
	2-Wire Voice Grade Loop (SL2) - Zone 3		3	UEPFR	UECF2	33.22										
2-Wire Voice Grade Line Port Rates (Res)																
	2-Wire voice unbundled port - residence			UEPFR	UEPRL	1.23	128.96	64.11	61.92	9.97		7.86				
	2-Wire voice unbundled port with Caller ID - res			UEPFR	UEPRC	1.23	128.96	64.11	61.92	9.97		7.86				
	2-Wire voice unbundled port outgoing only - res			UEPFR	UEPRO	1.23	128.96	64.11	61.92	9.97		7.86				
	2-Wire voice Grade unbundled Kentucky extended local dialing parity port with Caller ID - res			UEPFR	UEPRM	1.23	128.96	64.11	61.92	9.97		7.86				
	2-Wire voice unbundles res, low usage line port with Caller ID (LUM)			UEPFR	UEPAP	1.23	128.96	64.11	61.92	9.97		7.86				
	2-Wire Voice Unbundled Kentucky Residence Dialing Plan without Caller ID			UEPFR	UEPWE	1.23	128.96	64.11	61.92	9.97		7.86				
INTEROFFICE TRANSPORT																
	Interoffice Transport - Dedicated - 2 Wire Voice Grade - Facility Termination			UEPFR	U1TV2	23.95	98.09	53.67	56.31	22.42		7.86				
	Interoffice Transport - Dedicated - 2 Wire Voice Grade - Per Mile or Fraction Mile			UEPFR	1L5XX	0.0095										
FEATURES																
	All Features Offered			UEPFR	UEPVF	0.00	0.00	0.00				7.86				
LOCAL NUMBER PORTABILITY																
	Local Number Portability (1 per port)			UEPFR	LNPCX	0.35										
NONRECURRING CHARGES (NRCs) - CURRENTLY COMBINED																
	2-Wire Loop / Dedicated IO Transport / 2 Wire Line Port Combination - Conversion - Switch-as-is			UEPFR	USAC2		9.03	1.87				7.86				
	2-Wire Loop / Dedicated IO Transport / 2 Wire Line Port Combination - Conversion - Switch-With-Change			UEPFR	USACC		9.03	1.87				7.86				
2-WIRE VOICE LOOP/ 2WIRE VOICE GRADE IO TRANSPORT/ 2-WIRE LINE PORT (BUS)																
UNE Port/Loop Combination Rates																
	2-Wire VG Loop/IO Tranport/Port Combo - Zone 1		1			13.90										
	2-Wire VG Loop/IO Tranport/Port Combo - Zone 2		2			18.68										
	2-Wire VG Loop/IO Tranport/Port Combo - Zone 3		3			34.45										
UNE Loop Rates																
	2-Wire Voice Grade Loop (SL2) - Zone 1		1	UEPFB	UECF2	12.67										
	2-Wire Voice Grade Loop (SL2) - Zone 2		2	UEPFB	UECF2	17.45										
	2-Wire Voice Grade Loop (SL2) - Zone 3		3	UEPFB	UECF2	33.22										
2-Wire Voice Grade Line Port (Bus)																
	2-Wire voice unbundled port without Caller ID - bus			UEPFB	UEPBL	1.23	128.96	64.11	61.92	9.97		7.86				
	2-Wire voice unbundled port with Caller + E484 ID - bus			UEPFB	UEPBC	1.23	128.96	64.11	61.92	9.97		7.86				
	2-Wire voice unbundled port outgoing only - bus			UEPFB	UEPBO	1.23	128.96	64.11	61.92	9.97		7.86				
	2-Wire voice Grade unbundled Kentucky extended local dialing parity port with Caller ID - bus			UEPFB	UEPBM	1.23	128.96	64.11	61.92	9.97		7.86				
	2-Wire voice unbundled incoming only port with Caller ID - Bus			UEPFB	UEPB1	1.23	128.96	64.11	61.92	9.97		7.86				
	2-Wire Voice Unbundled Kentucky Business Dialing Plan without Caller ID			UEPFB	UEPWF	1.23	128.96	64.11	61.92	9.97		7.86				
LOCAL NUMBER PORTABILITY																
	Local Number Portability (1 per port)			UEPFB	LNPCX	0.35										
INTEROFFICE TRANSPORT																
	Interoffice Transport - Dedicated - 2 Wire Voice Grade - Facility Termination			UEPFB	U1TV2	23.95	98.09	53.67	56.31	22.42		7.86				
	Interoffice Transport - Dedicated - 2 Wire Voice Grade - Per Mile or Fraction Mile			UEPFB	1L5XX	0.0095										
FEATURES																
	All Features Offered			UEPFB	UEPVF	0.00	0.00	0.00				7.86				
NONRECURRING CHARGES (NRCs) - CURRENTLY COMBINED																

UNBUNDLED NETWORK ELEMENTS - Kentucky														Attachment: 2		Exhibit: B	
CATEGORY		RATE ELEMENTS	Interim	Zone	BCS	USOC	RATES ($)					Svc Order Submitted Elec per LSR	Svc Order Submitted Manually per LSR	Incremental Charge - Manual Svc Order vs. Electronic-1st	Incremental Charge - Manual Svc Order vs. Electronic-Add'l	Incremental Charge - Manual Svc Order vs. Electronic-Disc 1st	Incremental Charge - Manual Svc Order vs. Electronic-Disc Add'l
							Rec	Nonrecurring		Nonrecurring Disconnect		OSS Rates($)					
								First	Add'l	First	Add'l	SOMEC	SOMAN	SOMAN	SOMAN	SOMAN	SOMAN
		2-Wire Loop / Dedicated IO Transport / 2 Wire Line Port Combination - Conversion - Switch-as-is			UEPFB	USAC2		9.03	1.87				7.86				
		2-Wire Loop / Dedicated IO Transport / 2 Wire Line Port Combination - Conversion - Switch with change			UEPFB	USACC		9.03	1.87				7.86				
	2-WIRE VOICE GRADE LOOP WITH 2-WIRE LINE PORT (BUS - PBX)																
	UNE Port/Loop Combination Rates																
		2-Wire VG Loop/IO Tranport/Port Combo - Zone 1		1			13.90										
		2-Wire VG Loop/IO Tranport/Port Combo - Zone 2		2			18.68										
		2-Wire VG Loop/IO Tranport/Port Combo - Zone 3		3			34.45										
	UNE Loop Rates																
		2-Wire Voice Grade Loop (SL2) - Zone 1		1	UEPFP	UECF2	12.67										
		2-Wire Voice Grade Loop (SL2) - Zone 2		2	UEPFP	UECF2	17.45										
		2-Wire Voice Grade Loop (SL2) - Zone 3		3	UEPFP	UECF2	33.22										
	2-Wire Voice Grade Line Port Rates (BUS - PBX)																
		Line Side Unbundled Combination 2-Way PBX Trunk Port - Bus			UEPFP	UEPPC	1.23	164.27	78.65	75.05	8.73		7.86				
		Line Side Unbundled Outward PBX Trunk Port - Bus			UEPFP	UEPPO	1.23	164.27	78.65	75.05	8.73		7.86				
		Line Side Unbundled Incoming PBX Trunk Port - Bus			UEPFP	UEPP1	1.23	164.27	78.65	75.05	8.73		7.86				
		2-Wire Voice Unbundled PBX LD Terminal Ports			UEPFP	UEPLD	1.23	164.27	78.65	75.05	8.73		7.86				
		2-Wire Voice Unbundled 2-Way Combination PBX Usage Port			UEPFP	UEPXA	1.23	164.27	78.65	75.05	8.73		7.86				
		2-Wire Voice Unbundled PBX Toll Terminal Hotel Ports			UEPFP	UEPXB	1.23	164.27	78.65	75.05	8.73		7.86				
		2-Wire Voice Unbundled PBX LD DDD Terminals Port			UEPFP	UEPXC	1.23	164.27	78.65	75.05	8.73		7.86				
		2-Wire Voice Unbundled PBX LD Terminal Switchboard Port			UEPFP	UEPXD	1.23	164.27	78.65	75.05	8.73		7.86				
		2-Wire Voice Unbundled PBX LD Terminal Switchboard IDD Capable Port			UEPFP	UEPXE	1.23	164.27	78.65	75.05	8.73		7.86				
		2-Wire Voice Unbundled 2-Way PBX Kentucky Room Area Calling Port without LUD			UEPFP	UEPXF	1.23	164.27	78.65	75.05	8.73		7.86				
		2-Wire Voice Unbundled PBX Kentucky LUD Area Calling Port			UEPFP	UEPXG	1.23	164.27	78.65	75.05	8.73		7.86				
		2-Wire Voice Unbundled PBX Kentucky Premium Calling Port			UEPFP	UEPXH	1.23	164.27	78.65	75.05	8.73		7.86				
		2-Wire Voice Unbundled 2-Way Kentucky Area Calling Port without LUD			UEPFP	UEPXJ	1.23	164.27	78.65	75.05	8.73		7.86				
		2-Wire Voice Unbundled 2-Way PBX Hotel/Hospital Economy Administrative Calling Port			UEPFP	UEPXL	1.23	164.27	78.65	75.05	8.73		7.86				
		2-Wire Voice Unbundled 2-Way PBX Hotel/Hospital Economy Room Calling Port			UEPFP	UEPXM	1.23	164.27	78.65	75.05	8.73		7.86				
		2-Wire Voice Unbundled 1-Way Outgoing PBX Hotel/Hospital Discount Room Calling Port			UEPFP	UEPXO	1.23	164.27	78.65	75.05	8.73		7.86				
		2-Wire Voice Unbundled 1-Way Outgoing PBX Measured Port			UEPFP	UEPXS	1.23	164.27	78.65	75.05	8.73		7.86				
	LOCAL NUMBER PORTABILITY																
		Local Number Portability (1 per port)			UEPFP	LNPCP	3.15	0.00	0.00								
	INTEROFFICE TRANSPORT																
		Interoffice Transport - Dedicated - 2 Wire Voice Grade - Facility Termination			UEPFP	U1TV2	23.95	98.09	53.67	56.31	22.42		7.86				
		Interoffice Transport - Dedicated - 2 Wire Voice Grade - Per Mile or Fraction Mile			UEPFP	1L5XX	0.0095										
	FEATURES																
		All Features Offered			UEPFP	UEPVF	0.00	0.00	0.00				7.86				
	NONRECURRING CHARGES (NRCs) - CURRENTLY COMBINED																
		2-Wire Loop / Dedicated IO Transport / 2 Wire Line Port Combination - Conversion - Switch-as-is			UEPFP	USAC2		9.03	1.87				7.86				
		2-Wire Loop / Dedicated IO Transport / 2 Wire Line Port Combination - Conversion - Switch with change			UEPFP	USACC		9.03	1.87				7.86				
UNBUNDLED PORT/LOOP COMBINATIONS - COST BASED RATES																	
	2-WIRE VOICE GRADE LOOP- BUS ONLY - WITH 2-WIRE DID TRUNK PORT																
	UNE Port/Loop Combination Rates																
		2-Wire VG Loop/2-Wire DID Trunk Port Combo - UNE Zone 1		1			21.30										
		2-Wire VG Loop/2-Wire DID Trunk Port Combo - UNE Zone 2		2			26.08										
		2-Wire VG Loop/2-Wire DID Trunk Port Combo - UNE Zone 3		3			41.85										
	UNE Loop Rates																

CATEGORY	RATE ELEMENTS	Interim	Zone	BCS	USOC	RATES ($) Rec	Nonrecurring First	Nonrecurring Add'l	Nonrecurring Disconnect First	Nonrecurring Disconnect Add'l	Svc Order Submitted Elec per LSR	Svc Order Submitted Manually per LSR	Attachment: 2 Incremental Charge - Manual Svc Order vs. Electronic- 1st	Attachment: 2 Incremental Charge - Manual Svc Order vs. Electronic- Add'l	Exhibit: B Incremental Charge - Manual Svc Order vs. Electronic- Disc 1st	Exhibit: B Incremental Charge - Manual Svc Order vs. Electronic- Disc Add'l
											OSS Rates($)					
											SOMEC	SOMAN	SOMAN	SOMAN	SOMAN	SOMAN
	2-Wire Analog Voice Grade Loop - (SL2) - UNE Zone 1		1	UEPPX	UECD1	12.67						7.86				
	2-Wire Analog Voice Grade Loop - (SL2) - UNE Zone 2		2	UEPPX	UECD1	17.45						7.86				
	2-Wire Analog Voice Grade Loop - (SL2) - UNE Zone 3		3	UEPPX	UECD1	33.22						7.86				
UNE Port Rate																
	Exchange Ports - 2-Wire DID Port			UEPPX	UEPD1	8.63	336.11	27.75	132.37	9.31		7.86				
NONRECURRING CHARGES - CURRENTLY COMBINED																
	2-Wire Voice Grade Loop / 2-Wire DID Trunk Port Conversion with BellSouth Allowable Changes			UEPPX	USA1C		7.85	1.87				7.86				
ADDITIONAL NRCs																
	2-Wire DID Subsequent Activity - Add Trunks, Per Trunk			UEPPX	USAS1		32.25	32.25				7.86				
Telephone Number/Trunk Group Establisment Charges																
	DID Trunk Termination (One Per Port)			UEPPX	NDT	0.00	0.00	0.00				7.86				
	Additional DID Numbers for each Group of 20 DID Numbers			UEPPX	ND4	0.00	0.00	0.00				7.86				
	DID Numbers, Non- consecutive DID Numbers , Per Number			UEPPX	ND5	0.00	0.00	0.00				7.86				
	Reserve Non-Consecutive DID numbers			UEPPX	ND6	0.00	0.00	0.00				7.86				
	Reserve DID Numbers			UEPPX	NDV	0.00	0.00	0.00				7.86				
LOCAL NUMBER PORTABILITY																
	Local Number Portability (1 per port)			UEPPX	LNPCP	3.15	0.00	0.00								
2-WIRE ISDN DIGITAL GRADE LOOP WITH 2-WIRE ISDN DIGITAL LINE SIDE PORT																
UNE Port/Loop Combination Rates																
	2W ISDN Digital Grade Loop/2W ISDN Digital Line Side Port - UNE Zone 1		1	UEPPB UEPPR		25.69										
	2W ISDN Digital Grade Loop/2W ISDN Digital Line Side Port - UNE Zone 2		2	UEPPB UEPPR		31.92										
	2W ISDN Digital Grade Loop/2W ISDN Digital Line Side Port - UNE Zone 3		3	UEPPB UEPPR		50.21										
UNE Loop Rates																
	2-Wire ISDN Digital Grade Loop - UNE Zone 1		1	UEPPB UEPPR	USL2X	16.10						7.86				
	2-Wire ISDN Digital Grade Loop - UNE Zone 2		2	UEPPB UEPPR	USL2X	22.33						7.86				
	2-Wire ISDN Digital Grade Loop - UNE Zone 3		3	UEPPB UEPPR	USL2X	40.63						7.86				
UNE Port Rate																
	Exchange Port - 2-Wire ISDN Line Side Port			UEPPB UEPPR	UEPPB	9.59	320.53	289.13	92.19	17.56		7.86				
NONRECURRING CHARGES - CURRENTLY COMBINED																
	2-Wire ISDN Digital Grade Loop / 2-Wire ISDN Line Side Port Combination - Conversion			UEPPB UEPPR	USACB	0.00	22.77	17.00				7.86				
ADDITIONAL NRCs																
LOCAL NUMBER PORTABILITY																
	Local Number Portability (1 per port)			UEPPB UEPPR	LNPCX	0.35	0.00	0.00								
B-CHANNEL USER PROFILE ACCESS:																
	CVS/CSD (DMS/5ESS)			UEPPB UEPPR	U1UCA	0.00	0.00	0.00								
	CVS (EWSD)			UEPPB UEPPR	U1UCB	0.00	0.00	0.00								
	CSD			UEPPB UEPPR	U1UCC	0.00	0.00	0.00								
B-CHANNEL AREA PLUS USER PROFILE ACCESS: (AL,KY,LA,MS SC,MS, & TN)																
	CVS/CSD (DMS/5ESS)			UEPPB UEPPR	U1UCD	0.00	0.00	0.00								
	CVS (EWSD)			UEPPB UEPPR	U1UCE	0.00	0.00	0.00								
	CSD			UEPPB UEPPR	U1UCF	0.00	0.00	0.00								
USER TERMINAL PROFILE																
	User Terminal Profile (EWSD only)			UEPPB UEPPR	U1UMA	0.00	0.00	0.00								
VERTICAL FEATURES																
	All Vertical Features - One per Channel B User Profile			UEPPB UEPPR	UEPVF	0.00	0.00	0.00								
INTEROFFICE CHANNEL MILEAGE																
	Interoffice Channel mileage each, including first mile and facilities termination			UEPPB UEPPR	M1GNC	29.12	47.34	31.78	22.77	8.75		7.86				
	Interoffice Channel mileage each, additional mile			UEPPB UEPPR	M1GNM	0.01	0.00	0.00				7.86				
4-WIRE DS1 DIGITAL LOOP WITH 4-WIRE ISDN DS1 DIGITAL TRUNK PORT																
UNE Port/Loop Combination Rates																
	4W DS1 Digital Loop/4W ISDN DS1 Digital Trunk Port - UNE Zone 1		1	UEPPP		170.06										

UNBUNDLED NETWORK ELEMENTS - Kentucky														Attachment: 2		Exhibit: B	
CATEGORY	RATE ELEMENTS	Interim	Zone	BCS	USOC	RATES ($)					Svc Order Submitted Elec per LSR	Svc Order Submitted Manually per LSR	Incremental Charge - Manual Svc Order vs. Electronic-1st	Incremental Charge - Manual Svc Order vs. Electronic-Add'l	Incremental Charge - Manual Svc Order vs. Electronic-Disc 1st	Incremental Charge - Manual Svc Order vs. Electronic-Disc Add'l
						Rec	Nonrecurring		Nonrecurring Disconnect		OSS Rates($)					
							First	Add'l	First	Add'l	SOMEC	SOMAN	SOMAN	SOMAN	SOMAN	SOMAN
	4W DS1 Digital Loop/4W ISDN DS1 Digital Trunk Port - UNE Zone 2		2	UEPPP		197.70										
	4W DS1 Digital Loop/4W ISDN DS1 Digital Trunk Port - UNE Zone 3		3	UEPPP		381.35										
UNE Loop Rates																
	4-Wire DS1 Digital Loop - UNE Zone 1		1	UEPPP	USL4P	86.47						7.86				
	4-Wire DS1 Digital Loop - UNE Zone 2		2	UEPPP	USL4P	114.10						7.86				
	4-Wire DS1 Digital Loop - UNE Zone 3		3	UEPPP	USL4P	297.76						7.86				
UNE Port Rate																
	Exchange Ports - 4-Wire ISDN DS1 Port			UEPPP	UEPPP	83.59	736.16	382.74	159.48	48.82		7.86				
NONRECURRING CHARGES - CURRENTLY COMBINED																
	4-Wire DS1 Digital Loop / 4-Wire ISDN DS1 Digital Trunk Port Combination - Conversion -Switch-as-is			UEPPP	USACP	0.00	81.70	61.37				7.86				
ADDITIONAL NRCs																
	4-Wire DS1 Loop/4-W ISDN Digtl Trk Port - Subsqt Actvy-Inward/two way Tel Nos. (except NC)			UEPPP	PR7TF		0.54					7.86				
	4-Wire DS1 Loop / 4-Wire ISDN DS1 Digital Trunk Port - Outward Tel Numbers (All States except NC)			UEPPP	PR7TO		12.71	12.71				7.86				
	4-Wire DS1 Loop / 4-Wire ISDN DS1 Digital Trk Port - Subsequent Inward Tel Numbers			UEPPP	PR7ZT		25.41	25.41				7.86				
LOCAL NUMBER PORTABILITY																
	Local Number Portability (1 per port)			UEPPP	LNPCN	1.75										
INTERFACE (Provsioning Only)																
	Voice/Data			UEPPP	PR71V	0.00	0.00	0.00								
	Digital Data			UEPPP	PR71D	0.00	0.00	0.00								
	Inward Data			UEPPP	PR71E	0.00	0.00	0.00								
New or Additional "B" Channel																
	New or Additional - Voice/Data B Channel			UEPPP	PR7BV	0.00	15.48					7.86				
	New or Additional - Digital Data B Channel			UEPPP	PR7BF	0.00	15.48					7.86				
	New or Additional Inward Data B Channel			UEPPP	PR7BD	0.00	15.48					7.86				
CALL TYPES																
	Inward			UEPPP	PR7C1	0.00	0.00	0.00								
	Outward			UEPPP	PR7CO	0.00	0.00	0.00								
	Two-way			UEPPP	PR7CC	0.00	0.00	0.00								
Interoffice Channel Mileage																
	Fixed Each Including First Mile			UEPPP	1LN1A	96.27	105.52	98.46	23.09	20.49		7.86				
	Each Airline-Fractional Additional Mile			UEPPP	1LN1B	0.23										
4-WIRE DS1 DIGITAL LOOP WITH 4-WIRE DDITS TRUNK PORT																
UNE Port/Loop Combination Rates																
	4W DS1 Digital Loop/4W DDITS Trunk Port - UNE Zone 1		1	UEPDC		147.99										
	4W DS1 Digital Loop/4W DDITS Trunk Port - UNE Zone 2		2	UEPDC		175.62										
	4W DS1 Digital Loop/4W DDITS Trunk Port - UNE Zone 3		3	UEPDC		359.28										
UNE Loop Rates																
	4-Wire DS1 Digital Loop - UNE Zone 1		1	UEPDC	USLDC	86.47						7.86				
	4-Wire DS1 Digital Loop - UNE Zone 2		2	UEPDC	USLDC	114.10						7.86				
	4-Wire DS1 Digital Loop - UNE Zone 3		3	UEPDC	USLDC	297.76						7.86				
UNE Port Rate																
	4-Wire DDITS Digital Trunk Port			UEPDC	UDD1T	61.52	780.61	375.52	176.19	16.98		7.86				
NONRECURRING CHARGES - CURRENTLY COMBINED																
	4-Wire DS1 Digital Loop / 4-Wire DDITS Trunk Port Combination - Switch-as-is			UEPDC	USAC4		92.84	46.70				7.86				
	4-Wire DS1 Digital Loop / 4-Wire DDITS Trunk Port Combination - Conversion with DS1 Changes			UEPDC	USAWA		92.84	46.70				7.86				
	4-Wire DS1 Digital Loop / 4-Wire DDITS Trunk Port Combination - Conversion with Change - Trunk			UEPDC	USAWB		92.84	46.70				7.86				
ADDITIONAL NRCs																
	4-Wire DS1 Loop / 4-Wire DDITS Trunk Port - NRC - Subsequent Channel Activation/Chan - 2-Way Trunk			UEPDC	UDTTA		15.09	15.09				7.86				

CATEGORY	RATE ELEMENTS	Interim	Zone	BCS	USOC	RATES ($)					Svc Order Submitted Elec per LSR	Svc Order Submitted Manually per LSR	Attachment: 2 Incremental Charge - Manual Svc Order vs. Electronic-1st	Attachment: 2 Incremental Charge - Manual Svc Order vs. Electronic-Add'l	Exhibit: B Incremental Charge - Manual Svc Order vs. Electronic-Disc 1st	Exhibit: B Incremental Charge - Manual Svc Order vs. Electronic-Disc Add'l
						Rec	Nonrecurring		Nonrecurring Disconnect				OSS Rates($)			
							First	Add'l	First	Add'l	SOMEC	SOMAN	SOMAN	SOMAN	SOMAN	SOMAN
	4-Wire DS1 Loop / 4-Wire DDITS Trunk Port - Subsequent Channel Activation/Chan - 1-Way Outward Trunk			UEPDC	UDTTB		15.09	15.09				7.86				
	4-Wire DS1 Loop / 4-Wire DDITS Trunk Port - Subsqnt Channel Activation/Chan Inward Trunk w/out DID			UEPDC	UDTTC		15.09	15.09				7.86				
	4-Wire DS1 Loop / 4-Wire DDITS Trunk Port - Subsqnt Chan Activation Per Chan - Inward Trunk with DID			UEPDC	UDTTD		15.09	15.09				7.86				
	4-Wire DS1 Loop / 4-Wire DDITS Trunk Port - Subsqnt Chan Activation / Chan - 2-Way DID w User Trans			UEPDC	UDTTE		15.09	15.09				7.86				
BIPOLAR 8 ZERO SUBSTITUTION																
	B8ZS -Superframe Format			UEPDC	CCOSF		0.00	730.00				7.86				
	B8ZS - Extended Superframe Format			UEPDC	CCOEF		0.00	730.00				7.86				
Alternate Mark Inversion																
	AMI -Superframe Format			UEPDC	MCOSF		0.00	0.00								
	AMI - Extended SuperFrame Format			UEPDC	MCOPO		0.00	0.00								
Telephone Number/Trunk Group Establisment Charges																
	Telephone Number for 2-Way Trunk Group			UEPDC	UDTGX	0.00	0.00	0.00				7.86				
	Telephone Number for 1-Way Outward Trunk Group			UEPDC	UDTGY	0.00		0.00				7.86				
	Telephone Number for 1-Way Inward Trunk Group Without DID			UEPDC	UDTGZ	0.00	0.00	0.00				7.86				
	DID Numbers for each Group of 20 DID Numbers			UEPDC	ND4	0.00	0.00	0.00				7.86				
	DID Numbers, Non- consecutive DID Numbers , Per Number			UEPDC	ND5	0.00	0.00	0.00				7.86				
	Reserve Non-Consecutive DID Nos.			UEPDC	ND6	0.00	0.00	0.00				7.86				
	Reserve DID Numbers			UEPDC	NDV	0.00	0.00	0.00				7.86				
Dedicated DS1 (Interoffice Channel Mileage) - FX/FCO for 4-Wire DS1 Digital Loop with 4-Wire DDITS Trunk Port																
	Interoffice Channel Mileage - Fixed rate 0-8 miles (Facilities Termination)			UEPDC	1LNO1	96.04	105.52	98.46	23.09	20.49		7.86				
	Interoffice Channel Mileage - Additional rate per mile - 0-8 miles			UEPDC	1LNOA	0.23	0.00	0.00								
	Interoffice Channel Mileage - Fixed rate 9-25 miles (Facilities Termination)			UEPDC	1LNO2	0.00	0.00	0.00								
	Interoffice Channel Mileage - Additional rate per mile - 9-25 miles			UEPDC	1LNOB	0.45	0.00	0.00								
	Interoffice Channel Mileage - Fixed rate 25+ miles (Facilities Termination)			UEPDC	1LNO3	0.00	0.00	0.00								
	Interoffice Channel Mileage - Additional rate per mile - 25+ miles			UEPDC	1LNOC	0.45	0.00	0.00								
	Local Number Portability, per DS0 Activated			UEPDC	LNPCP	3.15	0.00	0.00								
	Central Office Termininating Point			UEPDC	CTG	0.00										
4-WIRE DS1 LOOP WITH CHANNELIZATION WITH PORT																
System is 1 DS1 Loop, 1 D4 Channel Bank, and up to 24 Feature Activations																
Each System can have up to 24 combinations of rates depending on type and number of ports used																
UNE DS1 Loop																
	4-Wire DS1 Loop - UNE Zone 1		1	UEPMG	USLDC	86.47	0.00	0.00								
	4-Wire DS1 Loop - UNE Zone 2		2	UEPMG	USLDC	114.10	0.00	0.00								
	4-Wire DS1 Loop - UNE Zone 3		3	UEPMG	USLDC	297.76	0.00	0.00								
UNE DSO Channelization Capacities (D4 Channel Bank Configurations)																
	24 DSO Channel Capacity - 1 per DS1			UEPMG	VUM24	111.16	0.00	0.00				7.86				
	48 DSO Channel Capacity - 1 per 2 DS1s			UEPMG	VUM48	222.32	0.00	0.00				7.86				
	96 DSO Channel Capacity -1per 4 DS1s			UEPMG	VUM96	444.64	0.00	0.00				7.86				
	144 DS0 Channel Capacity - 1 per 6 DS1s			UEPMG	VUM14	666.96	0.00	0.00				7.86				
	192 DS0 Channel Capacity -1 per 8 DS1s			UEPMG	VUM19	889.28	0.00	0.00				7.86				
	240 DS0 Channel Capacity - 1 per 10 DS1s			UEPMG	VUM2O	1,111.60	0.00	0.00				7.86				
	288 DS0 Channel Capacity - 1 per 12 DS1s			UEPMG	VUM28	1,333.92	0.00	0.00				7.86				
	384 DS0 Channel Capacity - 1 per 16 DS1s			UEPMG	VUM38	1,778.56	0.00	0.00				7.86				
	480 DS0 Channel Capacity - 1 per 20 DS1s			UEPMG	VUM4O	2,223.20	0.00	0.00				7.86				
	576 DS0 Channel Capacity -1 per 24 DS1s			UEPMG	VUM57	2,667.84	0.00	0.00				7.86				
	672 DS0 Channel Capacity - 1 per 28 DS1s			UEPMG	VUM67	3,112.48	0.00	0.00				7.86				
Non-Recurring Charges (NRC) Associated with 4-Wire DS1 Loop with Channeliztion with Port - Conversion Charge Based on a System																
A Minimum System configuration is One (1) DS1, One (1) D4 Channel Bank, and Up To 24 DSO Ports with Feature Activations.																
Multiples of this configuration functioning as one are considered Add'l after the minimum system configuration is counted.																

CATEGORY	RATE ELEMENTS	Interim	Zone	BCS	USOC	RATES ($)					Svc Order Submitted Elec per LSR	Svc Order Submitted Manually per LSR	Incremental Charge - Manual Svc Order vs. Electronic-1st	Incremental Charge - Manual Svc Order vs. Electronic-Add'l	Incremental Charge - Manual Svc Order vs. Electronic-Disc 1st	Incremental Charge - Manual Svc Order vs. Electronic-Disc Add'l
						Rec	Nonrecurring		Nonrecurring Disconnect		OSS Rates($)					
							First	Add'l	First	Add'l	SOMEC	SOMAN	SOMAN	SOMAN	SOMAN	SOMAN
	NRC - Conversion (Currently Combined) with or without BellSouth Allowed Changes			UEPMG	USAC4	0.00	94.30	4.24				7.86				
	System Additions at End User Locations Where 4-Wire DS1 Loop with Channelization with Port Combination Currently Exists and															
	New (Not Currently Combined) in all states, except in Density Zone 1 of Top 8 MSA's															
	1 DS1/D4 Channel Bank - Additionally Add NRC for each Port and Assoc Fea Activation			UEPMG	VUMD4	0.00	718.89	469.86	149.83	17.77		7.86				
	Bipolar 8 Zero Substitution															
	Clear Channel Capability Format, superframe - Subsequent Activity Only			UEPMG	CCOSF	0.00	0.00	730.00				7.86				
	Clear Channel Capability Format - Extended Superframe - Subsequent Activity Only			UEPMG	CCOEF	0.00	0.00	730.00				7.86				
	Alternate Mark Inversion (AMI)															
	Superframe Format			UEPMG	MCOSF	0.00	0.00	0.00								
	Extended Superframe Format			UEPMG	MCOPO	0.00	0.00	0.00								
	Exchange Ports Associated with 4-Wire DS1 Loop with Channelization with Port															
	Exchange Ports															
	Line Side Combination Channelized PBX Trunk Port - Business			UEPPX	UEPCX	1.15	0.00	0.00	0.00	0.00		7.86				
	Line Side Outward Channelized PBX Trunk Port - Business			UEPPX	UEPOX	1.15	0.00	0.00	0.00	0.00		7.86				
	Line Side Inward Only Channelized PBX Trunk Port without DID			UEPPX	UEP1X	1.15	0.00	0.00	0.00	0.00		7.86				
	2-Wire Trunk Side Unbundled Channelized DID Trunk Port			UEPPX	UEPDM	8.65	0.00	0.00	0.00	0.00		7.86				
	Unbundled Exchange Ports, 2-Wire Channelized – Outdial – (AL, KY, LA, MS, & TN)(Conversion from Network Access Service)			UEPPX	UEPCY	1.15	0.00	0.00	0.00	0.00		7.86				
	Unbundled Exchange Ports, 2-Wire Channelized – Combination (AL, KY, LA, MS, & TN) (Conversion from Network Access Service)			UEPPX	UEPCT	1.15	0.00	0.00	0.00	0.00		7.86				
	Unbundled Exchange Ports, 2-Wire Channelized – Outdial – Kentucky Only – Calling Plan			UEPPX	UEPCV	1.15	0.00	0.00	0.00	0.00		7.86				
	Unbundled Exchange Ports, 2-Wire Channelized – Two Way - Kentucky Only – Calling Plan			UEPPX	UEPCW	1.15	0.00	0.00	0.00	0.00		7.86				
	Feature Activations - Unbundled Loop Concentration															
	Feature (Service) Activation for each Line Port Terminated in D4 Bank			UEPPX	1PQWM	0.62	25.40	13.41	4.17	4.15		7.86				
	Feature (Service) Activation for each Trunk Port Terminated in D4 Bank			UEPPX	1PQWU	0.62	78.15	19.68	59.05	11.54		7.86				
	Telephone Number/ Group Establishment Charges for DID Service															
	DID Trunk Termination (1 per Port)			UEPPX	NDT	0.00	0.00	0.00				7.86				
	DID Numbers - groups of 20 - Valid all States			UEPPX	ND4	0.00	0.00	0.00				7.86				
	Non-Consecutive DID Numbers - per number			UEPPX	ND5	0.00	0.00	0.00				7.86				
	Reserve Non-Consecutive DID Numbers			UEPPX	ND6	0.00	0.00	0.00				7.86				
	Reserve DID Numbers			UEPPX	NDV	0.00	0.00	0.00				7.86				
	Local Number Portability															
	Local Number Portability - 1 per port			UEPPX	LNPCP	3.15	0.00	0.00								
	FEATURES - Vertical and Optional															
	Local Switching Features Offered with Line Side Ports Only															
	All Features Available			UEPPX	UEPVF	0.00	0.00	0.00								
UNBUNDLED CENTREX PORT/LOOP COMBINATIONS - COST BASED RATES																
	1. Cost Based Rates are applied where BellSouth is required by FCC and/or State Commission rule to provide Unbundled Local Switching or Switch Ports.															
	2. Features shall apply to the Unbundled Port/Loop Combination - Cost Based Rate section in the same manner as they are applied to the Stand-Alone Unbundled Port section of this Rate Exhibit.															
	3. End Office and Tandem Switching Usage and Common Transport Usage rates in the Port section of this rate exhibit shall apply to all combinations of loop/port network elements except for UNE Coin Port/Loop Combinations.															
	4. The first and additional Port nonrecurring charges apply to Not Currently Combined Combos. For Currently Combined Combos, the nonrecurring charges shall be those identified in the Nonrecurring - Currently Combined sections. Additional NRCs may apply also and are categorized accordingly.															
	5. Market Rates for Unbundled Centrex Port/Loop Combination will be negotiated on an Individual Case Basis, until further notice.															
	UNE-P CENTREX - 1AESS - (Valid in AL,FL,GA,KY,LA,MS,&TN only)															
	2-Wire VG Loop/2-Wire Voice Grade Port (Centrex) Combo															
	UNE Port/Loop Combination Rates (Non-Design)															

CATEGORY	RATE ELEMENTS	Interim	Zone	BCS	USOC	RATES ($)					Svc Order Submitted Elec per LSR	Svc Order Submitted Manually per LSR	Attachment: 2 Incremental Charge - Manual Svc Order vs. Electronic-1st	Attachment: 2 Incremental Charge - Manual Svc Order vs. Electronic-Add'l	Exhibit: B Incremental Charge - Manual Svc Order vs. Electronic-Disc 1st	Exhibit: B Incremental Charge - Manual Svc Order vs. Electronic-Disc Add'l
						Rec	Nonrecurring		Nonrecurring Disconnect		OSS Rates($)					
							First	Add'l	First	Add'l	SOMEC	SOMAN	SOMAN	SOMAN	SOMAN	SOMAN
	2-Wire VG Loop/2-Wire Voice Grade Port (Centrex) Port Combo - Non-Design		1	UEP91		10.79										
	2-Wire VG Loop/2-Wire Voice Grade Port (Centrex)Port Combo - Non-Design		2	UEP91		15.52										
	2-Wire VG Loop/2-Wire Voice Grade Port (Centrex)Port Combo - Non-Design		3	UEP91		31.74										
UNE Port/Loop Combination Rates (Design)																
	2-Wire VG Loop/2-Wire Voice Grade Port (Centrex) Port Combo - Design		1	UEP91		13.82										
	2-Wire VG Loop/2-Wire Voice Grade Port (Centrex)Port Combo - Design		2	UEP91		18.60										
	2-Wire VG Loop/2-Wire Voice Grade Port (Centrex)Port Combo - Design		3	UEP91		34.37										
UNE Loop Rate																
	2-Wire Voice Grade Loop (SL 1) - Zone 1		1	UEP91	UECS1	9.64						7.86				
	2-Wire Voice Grade Loop (SL 1) - Zone 2		2	UEP91	UECS1	14.37						7.86				
	2-Wire Voice Grade Loop (SL 1) - Zone 3		3	UEP91	UECS1	30.59						7.86				
	2-Wire Voice Grade Loop (SL 2) - Zone 1		1	UEP91	UECS2	12.67						7.86				
	2-Wire Voice Grade Loop (SL 2) - Zone 2		2	UEP91	UECS2	17.45						7.86				
	2-Wire Voice Grade Loop (SL 2) - Zone 3		3	UEP91	UECS2	33.22						7.86				
UNE Ports																
All States (Except North Carolina and Sout Carolina)																
	2-Wire Voice Grade Port (Centrex) Basic Local Area			UEP91	UEPYA	1.15	21.29	15.49	2.85	2.67		7.86				
	2-Wire Voice Grade Port (Centrex 800 termination)Basic Local Area			UEP91	UEPYB	1.15	21.29	15.49	2.85	2.67		7.86				
	2-Wire Voice Grade Port (Centrex with Caller ID)1Basic Local Area			UEP91	UEPYH	1.15	21.29	15.49	2.85	2.67		7.86				
	2-Wire Voice Grade Port (Centrex from diff Serving Wire Center)2 Basic Local Area			UEP91	UEPYM	1.15	21.29	15.49	2.85	2.67		7.86				
	2-Wire Voice Grade Port, Diff Serving Wire Center - 800 Service Term - Basic Local Area			UEP91	UEPYZ	1.15	21.29	15.49	2.85	2.67		7.86				
	2-Wire Voice Grade Port terminated in on Megalink or equivalent - Basic Local Area			UEP91	UEPY9	1.15	21.29	15.49	2.85	2.67		7.86				
	2-Wire Voice Grade Port Terminated on 800 Service Term - Basic Local Area			UEP91	UEPY2	1.15	21.29	15.49	2.85	2.67		7.86				
AL, KY, LA, MS, & TN Only																
	2-Wire Voice Grade Port (Centrex)			UEP91	UEPQA	1.15	21.29	15.49	2.85	2.67		7.86				
	2-Wire Voice Grade Port (Centrex 800 termination)			UEP91	UEPQB	1.15	21.29	15.49	2.85	2.67		7.86				
	2-Wire Voice Grade Port (Centrex with Caller ID)1			UEP91	UEPQH	1.15	21.29	15.49	2.85	2.67		7.86				
	2-Wire Voice Grade Port (Centrex from diff Serving Wire Center)2			UEP91	UEPQM	1.15	21.29	15.49	2.85	2.67		7.86				
	2-Wire Voice Grade Port, Diff Serving Wire Center - 800 Service Term			UEP91	UEPQZ	1.15	21.29	15.49	2.85	2.67		7.86				
	2-Wire Voice Grade Port terminated in on Megalink or equivalent			UEP91	UEPQ9	1.15	21.29	15.49	2.85	2.67		7.86				
	2-Wire Voice Grade Port Terminated on 800 Service Term			UEP91	UEPQ2	1.15	21.29	15.49	2.85	2.67		7.86				
Local Switching																
	Centrex Intercom Funtionality, per port			UEP91	URECS	0.8873						7.86				
Local Number Portability																
	Local Number Portability (1 per port)			UEP91	LNPCC	0.35										
Features																
	All Standard Features Offered, per port			UEP91	UEPVF	0.00						7.86				
	All Select Features Offered, per port			UEP91	UEPVS	0.00	405.66					7.86				
	All Centrex Control Features Offered, per port			UEP91	UEPVC	0.00						7.86				
NARS																
	Unbundled Network Access Register - Combination			UEP91	UARCX	0.00	0.00	0.00				7.86				
	Unbundled Network Access Register - Indial			UEP91	UAR1X	0.00	0.00	0.00				7.86				
	Unbundled Network Access Register - Outdial			UEP91	UAROX	0.00	0.00	0.00				7.86				
Miscellaneous Terminations																

UNBUNDLED NETWORK ELEMENTS - Kentucky														Attachment: 2		Exhibit: B	
CATEGORY	RATE ELEMENTS	Interim	Zone	BCS	USOC	RATES ($)					Svc Order Submitted Elec per LSR	Svc Order Submitted Manually per LSR	Incremental Charge - Manual Svc Order vs. Electronic-1st	Incremental Charge - Manual Svc Order vs. Electronic-Add'l	Incremental Charge - Manual Svc Order vs. Electronic-Disc 1st	Incremental Charge - Manual Svc Order vs. Electronic-Disc Add'l
						Rec	Nonrecurring		Nonrecurring Disconnect		OSS Rates($)					
							First	Add'l	First	Add'l	SOMEC	SOMAN	SOMAN	SOMAN	SOMAN	SOMAN
2-Wire Trunk Side																
	Trunk Side Terminations, each			UEP91	CENA6	10.51	92.18	15.82	52.16	5.30		7.86				
Interoffice Channel Mileage - 2-Wire																
	Interoffice Channel Facilities Termination - Voice Grade			UEP91	M1GBC	29.11						7.86				
	Interoffice Channel mileage, per mile or fraction of mile			UEP91	M1GBM	0.01						7.86				
Feature Activations (DS0) Centrex Loops on Channelized DS1 Service																
D4 Channel Bank Feature Activations																
	Feature Activation on D-4 Channel Bank Centrex Loop Slot			UEP91	1PQWS	0.62						7.86				
	Feature Activation on D-4 Channel Bank FX line Side Loop Slot			UEP91	1PQW6	0.62						7.86				
	Feature Activation on D-4 Channel Bank FX Trunk Side Loop Slot			UEP91	1PQW7	0.62						7.86				
	Feature Activation on D-4 Channel Bank Centrex Loop Slot - Different Wire Center			UEP91	1PQWP	0.62						7.86				
	Feature Activation on D-4 Channel Bank Private Line Loop Slot			UEP91	1PQWV	0.62						7.86				
	Feature Activation on D-4 Channel Bank Tjie Line/Trunk Loop Slot			UEP91	1PQWQ	0.62						7.86				
	Feature Activation on D-4 Channel Bank WATS Loop Slot			UEP91	1PQWA	0.62						7.86				
Non-Recurring Charges (NRC) Associated with UNE-P Centrex																
	Conversion - Currently Combined Switch-As-Is with allowed changes, per port			UEP91	USAC2		0.102	0.102				7.86				
	Conversion of Existing Centrex Common Block			UEP91	USACN		18.95	8.32								
	New Centrex Standard Common Block			UEP91	M1ACS	0.00	669.80	78.32	111.05	13.27		7.86				
	New Centrex Customized Common Block			UEP91	M1ACC	0.00	669.80	78.32	111.05	13.27		7.86				
	Secondary Block, per Block			UEP91	M2CC1	0.00	78.32	78.32	13.27	13.27		7.86				
	NAR Establishment Charge, Per Occasion			UEP91	URECA	0.00	72.75					7.86				
UNE-P CENTREX - 5ESS (Valid in All States)																
2-Wire VG Loop/2-Wire Voice Grade Port (Centrex) Combo																
UNE Port/Loop Combination Rates (Non-Design)																
	2-Wire VG Loop/2-Wire Voice Grade Port (Centrex) Port Combo - Non-Design		1	UEP95		10.79										
	2-Wire VG Loop/2-Wire Voice Grade Port (Centrex)Port Combo - Non-Design		2	UEP95		15.52										
	2-Wire VG Loop/2-Wire Voice Grade Port (Centrex)Port Combo - Non-Design		3	UEP95		31.74										
UNE Port/Loop Combination Rates (Design)																
	2-Wire VG Loop/2-Wire Voice Grade Port (Centrex) Port Combo - Design		1	UEP95		13.82										
	2-Wire VG Loop/2-Wire Voice Grade Port (Centrex)Port Combo - Design		2	UEP95		18.60										
	2-Wire VG Loop/2-Wire Voice Grade Port (Centrex)Port Combo - Design		3	UEP95		34.37										
UNE Loop Rate																
	2-Wire Voice Grade Loop (SL 1) - Zone 1		1	UEP95	UECS1	9.64						7.86				
	2-Wire Voice Grade Loop (SL 1) - Zone 2		2	UEP95	UECS1	14.37						7.86				
	2-Wire Voice Grade Loop (SL 1) - Zone 3		3	UEP95	UECS1	30.59						7.86				
	2-Wire Voice Grade Loop (SL 2) - Zone 1		1	UEP95	UECS2	12.67						7.86				
	2-Wire Voice Grade Loop (SL 2) - Zone 2		2	UEP95	UECS2	17.45						7.86				
	2-Wire Voice Grade Loop (SL 2) - Zone 3		3	UEP95	UECS2	33.22						7.86				
UNE Port Rate																
All States																
	2-Wire Voice Grade Port (Centrex) Basic Local Area			UEP95	UEPYA	1.15	21.29	15.49	2.85	2.67		7.86				
	2-Wire Voice Grade Port (Centrex 800 termination)			UEP95	UEPYB	1.15	21.29	15.49	2.85	2.67		7.86				
	2-Wire Voice Grade Port (Centrex with Caller ID)1Basic Local Area			UEP95	UEPYH	1.15	21.29	15.49	2.85	2.67		7.86				
	2-Wire Voice Grade Port (Centrex from diff Serving Wire Center)2 Basic Local Area			UEP95	UEPYM	1.15	21.29	15.49	2.85	2.67		7.86				

UNBUNDLED NETWORK ELEMENTS - Kentucky														Attachment: 2		Exhibit: B	
CATEGORY		RATE ELEMENTS	Interim	Zone	BCS	USOC	RATES ($)					Svc Order Submitted Elec per LSR	Svc Order Submitted Manually per LSR	Incremental Charge - Manual Svc Order vs. Electronic-1st	Incremental Charge - Manual Svc Order vs. Electronic-Add'l	Incremental Charge - Manual Svc Order vs. Electronic-Disc 1st	Incremental Charge - Manual Svc Order vs. Electronic-Disc Add'l
							Rec	Nonrecurring		Nonrecurring Disconnect		OSS Rates($)					
								First	Add'l	First	Add'l	SOMEC	SOMAN	SOMAN	SOMAN	SOMAN	SOMAN
		2-Wire Voice Grade Port, Diff Serving Wire Center - 800 Service Term - Basic Local Area			UEP95	UEPYZ	1.15	21.29	15.49	2.85	2.67		7.86				
		2-Wire Voice Grade Port terminated in on Megalink or equivalent - Basic Local Area			UEP95	UEPY9	1.15	21.29	15.49	2.85	2.67		7.86				
		2-Wire Voice Grade Port Terminated on 800 Service Term - Basic Local Area			UEP95	UEPY2	1.15	21.29	15.49	2.85	2.67		7.86				
	AL, KY, LA, MS, SC, & TN Only																
		2-Wire Voice Grade Port (Centrex)			UEP95	UEPQA	1.15	21.29	15.49	2.85	2.67		7.86				
		2-Wire Voice Grade Port (Centrex 800 termination)			UEP95	UEPQB	1.15	21.29	15.49	2.85	2.67		7.86				
		2-Wire Voice Grade Port (Centrex with Caller ID)1			UEP95	UEPQH	1.15	21.29	15.49	2.85	2.67		7.86				
		2-Wire Voice Grade Port (Centrex from diff Serving Wire Center)2			UEP95	UEPQM	1.15	21.29	15.49	2.85	2.67		7.86				
		2-Wire Voice Grade Port, Diff Serving Wire Center - 800 Service Term			UEP95	UEPQZ	1.15	21.29	15.49	2.85	2.67		7.86				
		2-Wire Voice Grade Port terminated in on Megalink or equivalent			UEP95	UEPQ9	1.15	21.29	15.49	2.85	2.67		7.86				
		2-Wire Voice Grade Port Terminated on 800 Service Term			UEP95	UEPQ2	1.15	21.29	15.49	2.85	2.67		7.86				
	Local Switching																
		Centrex Intercom Funtionality, per port			UEP95	URECS	0.8873						7.86				
	Local Number Portability																
		Local Number Portability (1 per port)			UEP95	LNPCC	0.35										
	Features																
		All Standard Features Offered, per port			UEP95	UEPVF	0.00						7.86				
		All Select Features Offered, per port			UEP95	UEPVS	0.00	405.66					7.86				
		All Centrex Control Features Offered, per port			UEP95	UEPVC	0.00						7.86				
	NARS																
		Unbundled Network Access Register - Combination			UEP95	UARCX	0.00	0.00	0.00				7.86				
		Unbundled Network Access Register - Indial			UEP95	UAR1X	0.00	0.00	0.00				7.86				
		Unbundled Network Access Register - Outdial			UEP95	UAROX	0.00	0.00	0.00				7.86				
	Miscellaneous Terminations																
	2-Wire Trunk Side																
		Trunk Side Terminations, each			UEP95	CEND6	10.51	92.18	15.82	52.16	5.30		7.86				
	4-Wire Digital (1.544 Megabits)																
		DS1 Circuit Terminations, each			UEP95	M1HD1	74.77	164.86	77.74	60.69	3.86		7.86				
		DS0 Channels Activated, each			UEP95	M1HDO	0.00	15.09					7.86				
	Interoffice Channel Mileage - 2-Wire																
		Interoffice Channel Facilities Termination			UEP95	M1GBC	29.11						7.86				
		Interoffice Channel mileage, per mile or fraction of mile			UEP95	M1GBM	0.01						7.86				
	Feature Activations (DS0) Centrex Loops on Channelized DS1 Service																
	D4 Channel Bank Feature Activations																
		Feature Activation on D-4 Channel Bank Centrex Loop Slot			UEP95	1PQWS	0.62						7.86				
		Feature Activation on D-4 Channel Bank FX line Side Loop Slot			UEP95	1PQW6	0.62						7.86				
		Feature Activation on D-4 Channel Bank FX Trunk Side Loop Slot			UEP95	1PQW7	0.62						7.86				
		Feature Activation on D-4 Channel Bank Centrex Loop Slot - Different Wire Center			UEP95	1PQWP	0.62						7.86				
		Feature Activation on D-4 Channel Bank Private Line Loop Slot			UEP95	1PQWV	0.62						7.86				
		Feature Activation on D-4 Channel Bank Tjie Line/Trunk Loop Slot			UEP95	1PQWQ	0.62						7.86				
		Feature Activation on D-4 Channel Bank WATS Loop Slot			UEP95	1PQWA	0.62						7.86				
	Non-Recurring Charges (NRC) Associated with UNE-P Centrex																
		NRC Conversion Currently Combined Switch-As-Is with allowed changes, per port			UEP95	USAC2		0.102	0.102				7.86				
		Conversion of Existing Centrex Common Block, each			UEP95	USACN		18.95	8.32				7.86				
		New Centrex Standard Common Block			UEP95	M1ACS	0.00	669.80	78.32	111.05	13.27		7.86				
		New Centrex Customized Common Block			UEP95	M1ACC	0.00	669.80	78.32	111.05	13.27		7.86				
		NAR Establishment Charge, Per Occasion			UEP95	URECA	0.00	72.75					7.86				

UNBUNDLED NETWORK ELEMENTS - Kentucky														Attachment: 2		Exhibit: B	
CATEGORY		RATE ELEMENTS	Interim	Zone	BCS	USOC	RATES ($)					Svc Order Submitted Elec per LSR	Svc Order Submitted Manually per LSR	Incremental Charge - Manual Svc Order vs. Electronic-1st	Incremental Charge - Manual Svc Order vs. Electronic-Add'l	Incremental Charge - Manual Svc Order vs. Electronic-Disc 1st	Incremental Charge - Manual Svc Order vs. Electronic-Disc Add'l
							Rec	Nonrecurring		Nonrecurring Disconnect		OSS Rates($)					
								First	Add'l	First	Add'l	SOMEC	SOMAN	SOMAN	SOMAN	SOMAN	SOMAN
	UNE-P CENTREX - DMS100 (Valid in All States)																
	2-Wire VG Loop/2-Wire Voice Grade Port (Centrex) Combo																
	UNE Port/Loop Combination Rates (Non-Design)																
		2-Wire VG Loop/2-Wire Voice Grade Port (Centrex) Port Combo - Non-Design		1	UEP9D		10.79										
		2-Wire VG Loop/2-Wire Voice Grade Port (Centrex)Port Combo - Non-Design		2	UEP9D		15.52										
		2-Wire VG Loop/2-Wire Voice Grade Port (Centrex)Port Combo - Non-Design		3	UEP9D		31.74										
	UNE Port/Loop Combination Rates (Design)																
		2-Wire VG Loop/2-Wire Voice Grade Port (Centrex) Port Combo - Design		1	UEP9D		13.82										
		2-Wire VG Loop/2-Wire Voice Grade Port (Centrex)Port Combo - Design		2	UEP9D		18.60										
		2-Wire VG Loop/2-Wire Voice Grade Port (Centrex)Port Combo - Design		3	UEP9D		34.37										
	UNE Loop Rate																
		2-Wire Voice Grade Loop (SL 1) - Zone 1		1	UEP9D	UECS1	9.64						7.86				
		2-Wire Voice Grade Loop (SL 1) - Zone 2		2	UEP9D	UECS1	14.37						7.86				
		2-Wire Voice Grade Loop (SL 1) - Zone 3		3	UEP9D	UECS1	30.59						7.86				
		2-Wire Voice Grade Loop (SL 2) - Zone 1		1	UEP9D	UECS2	12.67						7.86				
		2-Wire Voice Grade Loop (SL 2) - Zone 2		2	UEP9D	UECS2	17.45						7.86				
		2-Wire Voice Grade Loop (SL 2) - Zone 3		3	UEP9D	UECS2	33.22						7.86				
	UNE Port Rate																
	ALL STATES																
		2-Wire Voice Grade Port (Centrex) Basic Local Area			UEP9D	UEPYA	1.15	21.29	15.49	2.85	2.67		7.86				
		2-Wire Voice Grade Port (Centrex 800 termination)Basic Local Area			UEP9D	UEPYB	1.15	21.29	15.49	2.85	2.67		7.86				
		2-Wire Voice Grade Port (Centrex / EBS-PSET)3Basic Local Area			UEP9D	UEPYC	1.15	21.29	15.49	2.85	2.67		7.86				
		2-Wire Voice Grade Port (Centrex / EBS-M5009)3Basic Local Area			UEP9D	UEPYD	1.15	21.29	15.49	2.85	2.67		7.86				
		2-Wire Voice Grade Port (Centrex / EBS-M5209))3 Basic Local Area			UEP9D	UEPYE	1.15	21.29	15.49	2.85	2.67		7.86				
		2-Wire Voice Grade Port (Centrex / EBS-M5112))3 Basic Local Area			UEP9D	UEPYF	1.15	21.29	15.49	2.85	2.67		7.86				
		2-Wire Voice Grade Port (Centrex / EBS-M5312))3Basic Local Area			UEP9D	UEPYG	1.15	21.29	15.49	2.85	2.67		7.86				
		2-Wire Voice Grade Port (Centrex / EBS-M5008))3 Basic Local Area			UEP9D	UEPYT	1.15	21.29	15.49	2.85	2.67		7.86				
		2-Wire Voice Grade Port (Centrex / EBS-M5208))3 Basic Local Area			UEP9D	UEPYU	1.15	21.29	15.49	2.85	2.67		7.86				
		2-Wire Voice Grade Port (Centrex / EBS-M5216))3 Basic Local Area			UEP9D	UEPYV	1.15	21.29	15.49	2.85	2.67		7.86				
		2-Wire Voice Grade Port (Centrex / EBS-M5316))3 Basic Local Area			UEP9D	UEPY3	1.15	21.29	15.49	2.85	2.67		7.86				
		2-Wire Voice Grade Port (Centrex with Caller ID) Basic Local Area			UEP9D	UEPYH	1.15	21.29	15.49	2.85	2.67		7.86				
		2-Wire Voice Grade Port (Centrex/Caller ID/Msg Wtg Lamp Indication))3 Basic Local Area			UEP9D	UEPYW	1.15	21.29	15.49	2.85	2.67		7.86				
		2-Wire Voice Grade Port (Centrex/Msg Wtg Lamp Indication))3 Basic Local Area			UEP9D	UEPYJ	1.15	21.29	15.49	2.85	2.67		7.86				
		2-Wire Voice Grade Port (Centrex from diff Serving Wire Center) 2 Basic Local Area			UEP9D	UEPYM	1.15	21.29	15.49	2.85	2.67		7.86				
		2-Wire Voice Grade Port (Centrex/differ SWC /EBS-PSET)2, 3 Basic Local Area			UEP9D	UEPYO	1.15	21.29	15.49	2.85	2.67		7.86				
		2-Wire Voice Grade Port (Centrex/differ SWC /EBS-M5009)2, 3 Basic Local Area			UEP9D	UEPYP	1.15	21.29	15.49	2.85	2.67		7.86				

UNBUNDLED NETWORK ELEMENTS - Kentucky														Attachment: 2		Exhibit: B	
CATEGORY		RATE ELEMENTS	Interim	Zone	BCS	USOC	RATES ($)					Svc Order Submitted Elec per LSR	Svc Order Submitted Manually per LSR	Incremental Charge - Manual Svc Order vs. Electronic-1st	Incremental Charge - Manual Svc Order vs. Electronic-Add'l	Incremental Charge - Manual Svc Order vs. Electronic-Disc 1st	Incremental Charge - Manual Svc Order vs. Electronic-Disc Add'l
							Rec	Nonrecurring		Nonrecurring Disconnect		OSS Rates($)					
								First	Add'l	First	Add'l	SOMEC	SOMAN	SOMAN	SOMAN	SOMAN	SOMAN
		2-Wire Voice Grade Port (Centrex/differ SWC /EBS-5209)2, 3 Basic Local Area			UEP9D	UEPYQ	1.15	21.29	15.49	2.85	2.67		7.86				
		2-Wire Voice Grade Port (Centrex/differ SWC /EBS-M5112)2, 3 Basic Local Area			UEP9D	UEPYR	1.15	21.29	15.49	2.85	2.67		7.86				
		2-Wire Voice Grade Port (Centrex/differ SWC /EBS-M5312)2, 3 Basic Local Area			UEP9D	UEPYS	1.15	21.29	15.49	2.85	2.67		7.86				
		2-Wire Voice Grade Port (Centrex/differ SWC /EBS-M5008)2, 3 Basic Local Area			UEP9D	UEPY4	1.15	21.29	15.49	2.85	2.67		7.86				
		2-Wire Voice Grade Port (Centrex/differ SWC /EBS-M5208)2, 3 Basic Local Area			UEP9D	UEPY5	1.15	21.29	15.49	2.85	2.67		7.86				
		2-Wire Voice Grade Port (Centrex/differ SWC /EBS-M5216)2, 3 Basic Local Area			UEP9D	UEPY6	1.15	21.29	15.49	2.85	2.67		7.86				
		2-Wire Voice Grade Port (Centrex/differ SWC /EBS-M5316)2, 3 Basic Local Area			UEP9D	UEPY7	1.15	21.29	15.49	2.85	2.67		7.86				
		2-Wire Voice Grade Port, Diff Serving Wire Center - 800 Service Term			UEP9D	UEPYZ	1.15	21.29	15.49	2.85	2.67		7.86				
		2-Wire Voice Grade Port terminated in on Megalink or equivalent Basic Local Area			UEP9D	UEPY9	1.15	21.29	15.49	2.85	2.67		7.86				
		2-Wire Voice Grade Port Terminated on 800 Service Term Basic Local Area			UEP9D	UEPY2	1.15	21.29	15.49	2.85	2.67		7.86				
	AL, KY, LA, MS, SC, & TN Only																
		2-Wire Voice Grade Port (Centrex)			UEP9D	UEPQA	1.15	21.29	15.49	2.85	2.67		7.86				
		2-Wire Voice Grade Port (Centrex 800 termination)			UEP9D	UEPQB	1.15	21.29	15.49	2.85	2.67		7.86				
		2-Wire Voice Grade Port (Centrex / EBS-PSET)3			UEP9D	UEPQC	1.15	21.29	15.49	2.85	2.67		7.86				
		2-Wire Voice Grade Port (Centrex / EBS-M5009)3			UEP9D	UEPQD	1.15	21.29	15.49	2.85	2.67		7.86				
		2-Wire Voice Grade Port (Centrex / EBS-M5209)3			UEP9D	UEPQE	1.15	21.29	15.49	2.85	2.67		7.86				
		2-Wire Voice Grade Port (Centrex / EBS-M5112)3			UEP9D	UEPQF	1.15	21.29	15.49	2.85	2.67		7.86				
		2-Wire Voice Grade Port (Centrex / EBS-M5312)3			UEP9D	UEPQG	1.15	21.29	15.49	2.85	2.67		7.86				
		2-Wire Voice Grade Port (Centrex / EBS-M5008)3			UEP9D	UEPQT	1.15	21.29	15.49	2.85	2.67		7.86				
		2-Wire Voice Grade Port (Centrex / EBS-M5208)3			UEP9D	UEPQU	1.15	21.29	15.49	2.85	2.67		7.86				
		2-Wire Voice Grade Port (Centrex / EBS-M5216)3			UEP9D	UEPQV	1.15	21.29	15.49	2.85	2.67		7.86				
		2-Wire Voice Grade Port (Centrex / EBS-M5316)3			UEP9D	UEPQ3	1.15	21.29	15.49	2.85	2.67		7.86				
		2-Wire Voice Grade Port (Centrex with Caller ID)			UEP9D	UEPQH	1.15	21.29	15.49	2.85	2.67		7.86				
		2-Wire Voice Grade Port (Centrex/Caller ID/Msg Wtg Lamp Indication)3			UEP9D	UEPQW	1.15	21.29	15.49	2.85	2.67		7.86				
		2-Wire Voice Grade Port (Centrex/Msg Wtg Lamp Indication)3			UEP9D	UEPQJ	1.15	21.29	15.49	2.85	2.67		7.86				
		2-Wire Voice Grade Port (Centrex from diff Serving Wire Center) 2			UEP9D	UEPQM	1.15	21.29	15.49	2.85	2.67		7.86				
		2-Wire Voice Grade Port (Centrex/differ SWC /EBS-PSET)2, 3			UEP9D	UEPQO	1.15	21.29	15.49	2.85	2.67		7.86				
		2-Wire Voice Grade Port (Centrex/differ SWC /EBS-M5009)2, 3			UEP9D	UEPQP	1.15	21.29	15.49	2.85	2.67		7.86				
		2-Wire Voice Grade Port (Centrex/differ SWC /EBS-5209)2, 3			UEP9D	UEPQQ	1.15	21.29	15.49	2.85	2.67		7.86				
		2-Wire Voice Grade Port (Centrex/differ SWC /EBS-M5112)2, 3			UEP9D	UEPQR	1.15	21.29	15.49	2.85	2.67		7.86				
		2-Wire Voice Grade Port (Centrex/differ SWC /EBS-M5312)2, 3			UEP9D	UEPQS	1.15	21.29	15.49	2.85	2.67		7.86				
		2-Wire Voice Grade Port (Centrex/differ SWC /EBS-M5008)2, 3			UEP9D	UEPQ4	1.15	21.29	15.49	2.85	2.67		7.86				
		2-Wire Voice Grade Port (Centrex/differ SWC /EBS-M5208)2, 3			UEP9D	UEPQ5	1.15	21.29	15.49	2.85	2.67		7.86				
		2-Wire Voice Grade Port (Centrex/differ SWC /EBS-M5216)2, 3			UEP9D	UEPQ6	1.15	21.29	15.49	2.85	2.67		7.86				
		2-Wire Voice Grade Port (Centrex/differ SWC /EBS-M5316)2, 3			UEP9D	UEPQ7	1.15	21.29	15.49	2.85	2.67		7.86				
		2-Wire Voice Grade Port, Diff Serving Wire Center - 800 Service Term			UEP9D	UEPQZ	1.15	21.29	15.49	2.85	2.67		7.86				
		2-Wire Voice Grade Port terminated in on Megalink or equivalent			UEP9D	UEPQ9	1.15	21.29	15.49	2.85	2.67		7.86				
		2-Wire Voice Grade Port Terminated on 800 Service Term			UEP9D	UEPQ2	1.15	21.29	15.49	2.85	2.67		7.86				

UNBUNDLED NETWORK ELEMENTS - Kentucky													Attachment: 2		Exhibit: B	
CATEGORY	RATE ELEMENTS	Interim	Zone	BCS	USOC	RATES ($)					Svc Order Submitted Elec per LSR	Svc Order Submitted Manually per LSR	Incremental Charge - Manual Svc Order vs. Electronic-1st	Incremental Charge - Manual Svc Order vs. Electronic-Add'l	Incremental Charge - Manual Svc Order vs. Electronic-Disc 1st	Incremental Charge - Manual Svc Order vs. Electronic-Disc Add'l
						Rec	Nonrecurring		Nonrecurring Disconnect		OSS Rates($)					
							First	Add'l	First	Add'l	SOMEC	SOMAN	SOMAN	SOMAN	SOMAN	SOMAN
Local Switching																
	Centrex Intercom Funtionality, per port			UEP9D	URECS	0.8873						7.86				
Local Number Portability																
	Local Number Portability (1 per port)			UEP9D	LNPCC	0.35										
Features																
	All Standard Features Offered, per port			UEP9D	UEPVF	0.00						7.86				
	All Select Features Offered, per port			UEP9D	UEPVS	0.00	405.66					7.86				
	All Centrex Control Features Offered, per port			UEP9D	UEPVC	0.00						7.86				
NARS																
	Unbundled Network Access Register - Combination			UEP9D	UARCX	0.00	0.00	0.00				7.86				
	Unbundled Network Access Register - Inward			UEP9D	UAR1X	0.00	0.00	0.00				7.86				
	Unbundled Network Access Register - Outdial			UEP9D	UAROX	0.00	0.00	0.00				7.86				
Miscellaneous Terminations																
2-Wire Trunk Side																
	Trunk Side Terminations, each			UEP9D	CEND6	10.51	92.18	15.82	52.16	5.30		7.86				
4-Wire Digital (1.544 Megabits)																
	DS1 Circuit Terminations, each			UEP9D	M1HD1	74.77	164.86	77.74	60.69	3.86		7.86				
	DS0 Channels Activiated per Channel			UEP9D	M1HDO	0.00	15.09					7.86				
Interoffice Channel Mileage - 2-Wire																
	Interoffice Channel Facilities Termination			UEP9D	M1GBC	29.11						7.86				
	Interoffice Channel mileage, per mile or fraction of mile			UEP9D	M1GBM	0.01						7.86				
Feature Activations (DS0) Centrex Loops on Channelized DS1 Service																
D4 Channel Bank Feature Activations																
	Feature Activation on D-4 Channel Bank Centrex Loop Slot			UEP9D	1PQWS	0.62						7.86				
	Feature Activation on D-4 Channel Bank FX line Side Loop Slot			UEP9D	1PQW6	0.62						7.86				
	Feature Activation on D-4 Channel Bank FX Trunk Side Loop Slot			UEP9D	1PQW7	0.62						7.86				
	Feature Activation on D-4 Channel Bank Centrex Loop Slot - Different Wire Center			UEP9D	1PQWP	0.62						7.86				
	Feature Activation on D-4 Channel Bank Private Line Loop Slot			UEP9D	1PQWV	0.62						7.86				
	Feature Activation on D-4 Channel Bank Tjie Line/Trunk Loop Slot			UEP9D	1PQWQ	0.62						7.86				
	Feature Activation on D-4 Channel Bank WATS Loop Slot			UEP9D	1PQWA	0.62						7.86				
Non-Recurring Charges (NRC) Associated with UNE-P Centrex																
	NRC Conversion Currently Combined Switch-As-Is with allowed changes, per port			UEP9D	USAC2		0.102	0.102				7.86				
	Conversion of existing Centrex Common Block, each			UEP9D	USACN		18.95	8.32				7.86				
	New Centrex Standard Common Block			UEP9D	M1ACS	0.00	669.80	78.32	111.05	13.27		7.86				
	New Centrex Customized Common Block			UEP9D	M1ACC	0.00	669.80	78.32	111.05	13.27		7.86				
	NAR Establishment Charge, Per Occasion			UEP9D	URECA	0.00	72.75					7.86				
UNE-P CENTREX - EWSD (Valid in AL, FL, KY, LA, MS & TN)																
2-Wire VG Loop/2-Wire Voice Grade Port (Centrex) Combo																
UNE Port/Loop Combination Rates (Non-Design)																
	2-Wire VG Loop/2-Wire Voice Grade Port (Centrex) Port Combo - Non-Design		1	UEP9E		10.79										
	2-Wire VG Loop/2-Wire Voice Grade Port (Centrex)Port Combo - Non-Design		2	UEP9E		15.52										
	2-Wire VG Loop/2-Wire Voice Grade Port (Centrex)Port Combo - Non-Design		3	UEP9E		31.74										
UNE Port/Loop Combination Rates (Design)																
	2-Wire VG Loop/2-Wire Voice Grade Port (Centrex) Port Combo - Design		1	UEP9E		13.82										
	2-Wire VG Loop/2-Wire Voice Grade Port (Centrex)Port Combo - Design		2	UEP9E		18.60										
	2-Wire VG Loop/2-Wire Voice Grade Port (Centrex)Port Combo - Design		3	UEP9E		34.37										
UNE Loop Rate																

UNBUNDLED NETWORK ELEMENTS - Kentucky														Attachment: 2		Exhibit: B	
CATEGORY		RATE ELEMENTS	Interim	Zone	BCS	USOC	RATES ($)					Svc Order Submitted Elec per LSR	Svc Order Submitted Manually per LSR	Incremental Charge - Manual Svc Order vs. Electronic-1st	Incremental Charge - Manual Svc Order vs. Electronic-Add'l	Incremental Charge - Manual Svc Order vs. Electronic-Disc 1st	Incremental Charge - Manual Svc Order vs. Electronic-Disc Add'l
							Rec	Nonrecurring		Nonrecurring Disconnect		OSS Rates($)					
								First	Add'l	First	Add'l	SOMEC	SOMAN	SOMAN	SOMAN	SOMAN	SOMAN
		2-Wire Voice Grade Loop (SL 1) - Zone 1		1	UEP9E	UECS1	9.64						7.86				
		2-Wire Voice Grade Loop (SL 1) - Zone 2		2	UEP9E	UECS1	14.37						7.86				
		2-Wire Voice Grade Loop (SL 1) - Zone 3		3	UEP9E	UECS1	30.59						7.86				
		2-Wire Voice Grade Loop (SL 2) - Zone 1		1	UEP9E	UECS2	12.67						7.86				
		2-Wire Voice Grade Loop (SL 2) - Zone 2		2	UEP9E	UECS2	17.45						7.86				
		2-Wire Voice Grade Loop (SL 2) - Zone 3		3	UEP9E	UECS2	33.22						7.86				
	UNE Port Rate																
	AL, FL, KY, LA, MS, & TN only																
		2-Wire Voice Grade Port (Centrex) Basic Local Area			UEP9E	UEPYA	1.15	21.29	15.49	2.85	2.67		7.86				
		2-Wire Voice Grade Port (Centrex 800 termination)Basic Local Area			UEP9E	UEPYB	1.15	21.29	15.49	2.85	2.67		7.86				
		2-Wire Voice Grade Port (Centrex with Caller ID)1Basic Local Area			UEP9E	UEPYH	1.15	21.29	15.49	2.85	2.67		7.86				
		2-Wire Voice Grade Port (Centrex from diff Serving Wire Center)2 Basic Local Area			UEP9E	UEPYM	1.15	21.29	15.49	2.85	2.67		7.86				
		2-Wire Voice Grade Port, Diff Serving Wire Center - 800 Service Term - Basic Local Area			UEP9E	UEPYZ	1.15	21.29	15.49	2.85	2.67		7.86				
		2-Wire Voice Grade Port terminated in on Megalink or equivalent - Basic Local Area			UEP9E	UEPY9	1.15	21.29	15.49	2.85	2.67		7.86				
		2-Wire Voice Grade Port Terminated on 800 Service Term - Basic Local Area			UEP9E	UEPY2	1.15	21.29	15.49	2.85	2.67		7.86				
	AL, KY, LA, MS, & TN Only																
		2-Wire Voice Grade Port (Centrex)			UEP9E	UEPQA	1.15	21.29	15.49	2.85	2.67		7.86				
		2-Wire Voice Grade Port (Centrex 800 termination)			UEP9E	UEPQB	1.15	21.29	15.49	2.85	2.67		7.86				
		2-Wire Voice Grade Port (Centrex with Caller ID)1			UEP9E	UEPQH	1.15	21.29	15.49	2.85	2.67		7.86				
		2-Wire Voice Grade Port (Centrex from diff Serving Wire Center)2			UEP9E	UEPQM	1.15	21.29	15.49	2.85	2.67		7.86				
		2-Wire Voice Grade Port, Diff Serving Wire Center - 800 Service Term			UEP9E	UEPQZ	1.15	21.29	15.49	2.85	2.67		7.86				
		2-Wire Voice Grade Port terminated in on Megalink or equivalent			UEP9E	UEPQ9	1.15	21.29	15.49	2.85	2.67		7.86				
		2-Wire Voice Grade Port Terminated on 800 Service Term			UEP9E	UEPQ2	1.15	21.29	15.49	2.85	2.67		7.86				
	Local Switching																
		Centrex Intercom Funtionality, per port			UEP9E	URECS	0.8873						7.86				
	Local Number Portability																
		Local Number Portability (1 per port)			UEP9E	LNPCC	0.35						7.86				
	Features																
		All Standard Features Offered, per port			UEP9E	UEPVF	0.00						7.86				
		All Select Features Offered, per port			UEP9E	UEPVS	0.00	405.66					7.86				
		All Centrex Control Features Offered, per port			UEP9E	UEPVC	0.00						7.86				
	NARS																
		Unbundled Network Access Register - Combination			UEP9E	UARCX	0.00	0.00	0.00								
		Unbundled Network Access Register - Indial			UEP9E	UAR1X	0.00	0.00	0.00								
		Unbundled Network Access Register - Outdial			UEP9E	UAROX	0.00	0.00	0.00								
	Miscellaneous Terminations																
	2-Wire Trunk Side																
		Trunk Side Terminations, each			UEP9E	CEND6	10.51	92.18	15.82	52.16	5.30		7.86				
	4-Wire Digital (1.544 Megabits)																
		DS1 Circuit Terminations, each			UEP9E	M1HD1	74.77	164.86	77.74	60.69	3.86		7.86				
		DS0 Channel Activated Per Channel			UEP9E	M1HDO	0.00	15.09					7.86				
	Interoffice Channel Mileage - 2-Wire																
		Interoffice Channel Facilities Termination			UEP9E	M1GBC	29.11						7.86				
		Interoffice Channel mileage, per mile or fraction of mile			UEP9E	M1GBM	0.01						7.86				
	Feature Activations (DS0) Centrex Loops on Channelized DS1 Service																
	D4 Channel Bank Feature Activations																
		Feature Activation on D-4 Channel Bank Centrex Loop Slot			UEP9E	1PQWS	0.62						7.86				
		Feature Activation on D-4 Channel Bank FX line Side Loop Slot			UEP9E	1PQW6	0.62						7.86				

CATEGORY	RATE ELEMENTS	Interim	Zone	BCS	USOC	RATES ($)					Svc Order Submitted Elec per LSR	Svc Order Submitted Manually per LSR	Attachment: 2		Exhibit: B	
													Incremental Charge - Manual Svc Order vs. Electronic-1st	Incremental Charge - Manual Svc Order vs. Electronic-Add'l	Incremental Charge - Manual Svc Order vs. Electronic-Disc 1st	Incremental Charge - Manual Svc Order vs. Electronic-Disc Add'l
						Rec	Nonrecurring		Nonrecurring Disconnect		OSS Rates($)					
							First	Add'l	First	Add'l	SOMEC	SOMAN	SOMAN	SOMAN	SOMAN	SOMAN
	Feature Activation on D-4 Channel Bank FX Trunk Side Loop Slot			UEP9E	1PQW7	0.62						7.86				
	Feature Activation on D-4 Channel Bank Centrex Loop Slot - Different Wire Center			UEP9E	1PQWP	0.62						7.86				
	Feature Activation on D-4 Channel Bank Private Line Loop Slot			UEP9E	1PQWV	0.62						7.86				
	Feature Activation on D-4 Channel Bank Tjie Line/Trunk Loop Slot			UEP9E	1PQWQ	0.62						7.86				
	Feature Activation on D-4 Channel Bank WATS Loop Slot			UEP9E	1PQWA	0.62						7.86				
	Non-Recurring Charges (NRC) Associated with UNE-P Centrex															
	NRC Conversion Currently Combined Switch-As-Is with allowed changes, per port			UEP9E	USAC2		0.102	0.102				7.86				
	Conversion of Existing Centrex Common Block, each			UEP9E	USACN		18.95	8.32								
	New Centrex Standard Common Block			UEP9E	M1ACS	0.00	669.80	78.32	111.05	13.27		7.86				
	New Centrex Customized Common Block			UEP9E	M1ACC	0.00	669.80	78.32	111.05	13.27		7.86				
	NAR Establishment Charge, Per Occasion			UEP9E	URECA	0.00	72.75					7.86				
	UNE-P CENTREX - DCO - Valid in AL, KY, LA, MS, & TN)															
	2-Wire VG Loop/2-Wire Voice Grade Port (Centrex) Combo															
	UNE Port/Loop Combination Rates (Non-Design)															
	2-Wire VG Loop/2-Wire Voice Grade Port (Centrex) Port Combo - Non-Design		1	UEP93		10.79										
	2-Wire VG Loop/2-Wire Voice Grade Port (Centrex)Port Combo - Non-Design		2	UEP93		15.52										
	2-Wire VG Loop/2-Wire Voice Grade Port (Centrex)Port Combo - Non-Design		3	UEP93		31.74										
	UNE Port/Loop Combination Rates (Design)															
	2-Wire VG Loop/2-Wire Voice Grade Port (Centrex) Port Combo - Design		1	UEP93		13.82										
	2-Wire VG Loop/2-Wire Voice Grade Port (Centrex)Port Combo - Design		2	UEP93		18.60										
	2-Wire VG Loop/2-Wire Voice Grade Port (Centrex)Port Combo - Design		3	UEP93		34.37										
	UNE Loop Rate															
	2-Wire Voice Grade Loop (SL 1) - Zone 1		1	UEP93	UECS1	9.64										
	2-Wire Voice Grade Loop (SL 1) - Zone 2		2	UEP93	UECS1	14.37										
	2-Wire Voice Grade Loop (SL 1) - Zone 3		3	UEP93	UECS1	30.59										
	2-Wire Voice Grade Loop (SL 2) - Zone 1		1	UEP93	UECS2	12.67										
	2-Wire Voice Grade Loop (SL 2) - Zone 2		2	UEP93	UECS2	17.45										
	2-Wire Voice Grade Loop (SL 2) - Zone 3		3	UEP93	UECS2	33.22										
	UNE Port Rate															
	AL, KY, LA, MS, & TN only															
	2-Wire Voice Grade Port (Centrex) Basic Local Area			UEP93	UEPYA	1.15	21.29	15.49	2.85	2.67		7.86				
	2-Wire Voice Grade Port (Centrex 800 termination)Basic Local Area			UEP93	UEPYB	1.15	21.29	15.49	2.85	2.67		7.86				
	2-Wire Voice Grade Port (Centrex with Caller ID)1Basic Local Area			UEP93	UEPYH	1.15	21.29	15.49	2.85	2.67		7.86				
	2-Wire Voice Grade Port (Centrex from diff Serving Wire Center)2 Basic Local Area			UEP93	UEPYM	1.15	21.29	15.49	2.85	2.67		7.86				
	2-Wire Voice Grade Port, Diff Serving Wire Center - 800 Service Term - Basic Local Area			UEP93	UEPYZ	1.15	21.29	15.49	2.85	2.67		7.86				
	2-Wire Voice Grade Port terminated in on Megalink or equivalent - Basic Local Area			UEP93	UEPY9	1.15	21.29	15.49	2.85	2.67		7.86				
	2-Wire Voice Grade Port Terminated on 800 Service Term - Basic Local Area			UEP93	UEPY2	1.15	21.29	15.49	2.85	2.67		7.86				
	2-Wire Voice Grade Port (Centrex)			UEP93	UEPQA	1.15	21.29	15.49	2.85	2.67		7.86				
	2-Wire Voice Grade Port (Centrex 800 termination)			UEP93	UEPQB	1.15	21.29	15.49	2.85	2.67		7.86				
	2-Wire Voice Grade Port (Centrex with Caller ID)1			UEP93	UEPQH	1.15	21.29	15.49	2.85	2.67		7.86				
	2-Wire Voice Grade Port (Centrex from diff Serving Wire Center)2			UEP93	UEPQM	1.15	21.29	15.49	2.85	2.67		7.86				

UNBUNDLED NETWORK ELEMENTS - Kentucky														Attachment: 2		Exhibit: B	
CATEGORY	RATE ELEMENTS	Interim	Zone	BCS	USOC	RATES ($)					Svc Order Submitted Elec per LSR	Svc Order Submitted Manually per LSR	Incremental Charge - Manual Svc Order vs. Electronic-1st	Incremental Charge - Manual Svc Order vs. Electronic-Add'l	Incremental Charge - Manual Svc Order vs. Electronic-Disc 1st	Incremental Charge - Manual Svc Order vs. Electronic-Disc Add'l
						Rec	Nonrecurring		Nonrecurring Disconnect		OSS Rates($)					
							First	Add'l	First	Add'l	SOMEC	SOMAN	SOMAN	SOMAN	SOMAN	SOMAN
	2-Wire Voice Grade Port, Diff Serving Wire Center - 800 Service Term			UEP93	UEPQZ	1.15	21.29	15.49	2.85	2.67		7.86				
	2-Wire Voice Grade Port terminated in on Megalink or equivalent			UEP93	UEPQ9	1.15	21.29	15.49	2.85	2.67		7.86				
	2-Wire Voice Grade Port Terminated on 800 Service Term			UEP93	UEPQ2	1.15	21.29	15.49	2.85	2.67		7.86				
Local Switching																
	Centrex Intercom Funtionality, per port			UEP93	URECS	0.8873						7.86				
Local Number Portability																
	Local Number Portability (1 per port)			UEP93	LNPCC	0.35										
Features																
	All Standard Features Offered, per port			UEP93	UEPVF	0.00						7.86				
	All Centrex Control Features Offered, per port			UEP93	UEPVC	0.00						7.86				
NARS																
	Unbundled Network Access Register - Combination			UEP93	UARCX	0.00	0.00	0.00								
	Unbundled Network Access Register - Indial			UEP93	UAR1X	0.00	0.00	0.00								
	Unbundled Network Access Register - Outdial			UEP93	UAROX	0.00	0.00	0.00								
Miscellaneous Terminations																
2-Wire Trunk Side																
	Trunk Side Terminations, each			UEP93	CEND6	10.51	92.18	15.82	52.16	5.30		7.86				
4-Wire Digital (1.544 Megabits)																
	DS1 Circuit Terminations, each			UEP93	M1HD1	74.77	164.86	77.74	60.69	3.86		7.86				
	DS0 Channels Activated, Per Channel			UEP93	M1HDO	0.00	15.09					7.86				
Interoffice Channel Mileage - 2-Wire																
	Interoffice Channel Facilities Termination			UEP93	M1GBC	29.11						7.86				
	Interoffice Channel mileage, per mile or fraction of mile			UEP93	M1GBM	0.01						7.86				
Feature Activations (DS0) Centrex Loops on Channelized DS1 Service																
D4 Channel Bank Feature Activations																
	Feature Activation on D-4 Channel Bank Centrex Loop Slot			UEP93	1PQWS	0.62						7.86				
	Feature Activation on D-4 Channel Bank FX Line Side Loop Slot			UEP93	1PQW6	0.62						7.86				
	Feature Activation on D-4 Channel Bank FX Trunk Side Loop Slot			UEP93	1PQW7	0.62						7.86				
	Feature Activation on D-4 Channel Bank Centrex Loop Slot - Different Wire Center			UEP93	1PQWP	0.62						7.86				
	Feature Activation on D-4 Channel Bank Private Line Loop Slot			UEP93	1PQWV	0.62						7.86				
	Feature Activation on D-4 Channel Bank Tie Line/Trunk Loop Slot			UEP93	1PQWQ	0.62						7.86				
	Feature Activation on D-4 Channel Bank WATS Loop Slot			UEP93	1PQWA	0.62						7.86				
Non-Recurring Charges (NRC) Associated with UNE-P Centrex																
	NRC Conversion Currently Combined Switch-As-Is with allowed changes, per port			UEP93	USAC2		0.102	0.102				7.86				
	Conversion of Existing Centrex Common Block, each			UEP93	USACN		18.95	8.32				7.86				
	New Centrex Standard Common Block			UEP93	M1ACS	0.00	669.80	78.32	111.05	13.27		7.86				
	New Centrex Customized Common Block			UEP93	M1ACC	0.00	669.80	78.32	111.05	13.27		7.86				
	NAR Establishment Charge, Per Occasion			UEP93	URECA	0.00	72.75					7.86				
Note 1 - Required Port for Centrex Control in 1AESS, 5ESS & EWSD																
Note 2 - Requres Interoffice Channel Mileage																
Note 3 - Requires Specific Customer Premises Equipment																
Note: Rates displaying an "R" in Interim column are interim and subject to rate true-up as set forth in General Terms and Conditions.																

UNBUNDLED NETWORK ELEMENTS - Louisiana														Attachment: 2		Exhibit: B	
CATEGORY		RATE ELEMENTS	Interim	Zone	BCS	USOC	RATES ($)					Svc Order Submitted Elec per LSR	Svc Order Submitted Manually per LSR	Incremental Charge - Manual Svc Order vs. Electronic-1st	Incremental Charge - Manual Svc Order vs. Electronic-Add'l	Incremental Charge - Manual Svc Order vs. Electronic-Disc 1st	Incremental Charge - Manual Svc Order vs. Electronic-Disc Add'l
							Rec	Nonrecurring		Nonrecurring Disconnect		OSS Rates($)					
								First	Add'l	First	Add'l	SOMEC	SOMAN	SOMAN	SOMAN	SOMAN	SOMAN
	The "Zone" shown in the sections for stand-alone loops or loops as part of a combination refers to Geographically Deaveraged UNE Zones. To view Geographically Deaveraged UNE Zone Designations by Central Office, refer to internet Website: http://www.interconnection.bellsouth.com/become_a_clec/html/interconnection.htm																
OPERATIONAL SUPPORT SYSTEMS																	
	NOTE: (1) Electronic Service Order: CLEC should contact its contract negotiator if it prefers the state specific electronic service ordering charges as ordered by the State Commissions. The electronic service ordering charge currently contained in this rate exhibit is the BellSouth regional electronic service ordering charge. CLEC may elect either the state specific Commission ordered rates for the electronic service ordering charges, or CLEC may elect the regional electronic service ordering charge.																
	NOTE: (2) Any element that can be ordered electronically will be billed according to the SOMEC rate listed in this category. Please refer to BellSouth's Business Rules for Local Ordering (BBR-LO) to determine if a product can be ordered electronically. For those elements that cannot be ordered electronically at present per the BBR-LO, the listed SOMEC rate in this category reflects the charge that would be billed to a CLEC once electronic ordering capabilities come on-line for that element. Otherwise, the manual ordering charge, SOMAN, will be applied to a CLECs bill when it submits an LSR to BellSouth.																
		Electronic OSS Charge, per LSR, submitted via BST's OSS interactive interfaces (Regional)				SOMEC		3.50									
UNE SERVICE DATE ADVANCEMENT CHARGE																	
	NOTE: The Expedite charge will be maintained commensurate with BellSouth's FCC No.1 Tariff, Section 5 as applicable.																
		UNE Expedite Charge per Circuit or Line Assignable USOC, per Day			UAL, UEANL, UCL, UEF, UDF, UEQ, UDL, UENTW, UDN, UEA, UHL, ULC, USL, U1T12, U1T48, U1TD1, U1TD3, U1TDX, U1TO3, U1TS1, U1TVX, UC1BC, UC1BL, UC1CC, UC1CL, UC1DC, UC1DL, UC1EC, UC1EL, UC1FC, UC1FL, UC1GC, UC1GL, UC1HC, UC1HL, UDL12, UDL48, UDLO3, UDLSX, UE3, ULD12, ULD48, ULDD1, ULDD3, ULDDX, ULDO3, ULDS1, ULDVX, UNC1X, UNC3X, UNCDX, UNCNX, UNCSX, UNCVX, UNLD1, UNLD3, UXTD1, UXTD3, UXTS1, U1TUC, U1TUD, U1TUB, U1TUA	SDASP		200.00									
UNBUNDLED EXCHANGE ACCESS LOOP																	
	2-WIRE ANALOG VOICE GRADE LOOP																
		2-Wire Analog Voice Grade Loop - Service Level 1- Zone 1		1	UEANL	UEAL2	12.90	36.54	16.87				15.20				
		2-Wire Analog Voice Grade Loop - Service Level 1- Zone 2		2	UEANL	UEAL2	23.33	36.54	16.87				15.20				
		2-Wire Analog Voice Grade Loop - Service Level 1- Zone 3		3	UEANL	UEAL2	48.43	36.54	16.87				15.20				
		Unbundled Miscellaneous Rate Element, Tag Loop at End User Premise			UEANL	URETL		8.33	0.83				15.20				
		Loop Testing - Basic 1st Half Hour			UEANL	URET1		33.17	33.17				15.20				
		Loop Testing - Basic Additional Half Hour			UEANL	URETA		19.28	19.28				15.20				
		CLEC to CLEC Conversion Charge Without Outside Dispatch (UVL-SL1)			UEANL	UREWO		15.75	8.93				15.20				
		Unbundled Voice Loop, Non-Design Voice Loop, billing for BST providing make-up (Engineering Information - E.I.)			UEANL	UEANM		13.04	13.04								
		Manual Order Coordination for UVL-SL1s (per loop)			UEANL	UEAMC		7.92	7.92								
		Order Coordination for Specified Conversion Time for UVL-SL1 (per LSR)			UEANL	OCOSL		17.56	17.56								

UNBUNDLED NETWORK ELEMENTS - Louisiana													Attachment: 2		Exhibit: B	
CATEGORY	RATE ELEMENTS	Interim	Zone	BCS	USOC	RATES ($)					Svc Order Submitted Elec per LSR	Svc Order Submitted Manually per LSR	Incremental Charge - Manual Svc Order vs. Electronic-1st	Incremental Charge - Manual Svc Order vs. Electronic-Add'l	Incremental Charge - Manual Svc Order vs. Electronic-Disc 1st	Incremental Charge - Manual Svc Order vs. Electronic-Disc Add'l
						Rec	Nonrecurring		Nonrecurring Disconnect		OSS Rates($)					
							First	Add'l	First	Add'l	SOMEC	SOMAN	SOMAN	SOMAN	SOMAN	SOMAN
2-WIRE Unbundled COPPER LOOP																
	2-Wire Unbundled Copper Loop - Non-Designed Zone 1	I	1	UEQ	UEQ2X	12.40	35.27	15.60				15.20				
	2 Wire Unbundled Copper Loop - Non-Designed - Zone 2	I	2	UEQ	UEQ2X	14.32	35.27	15.60				15.20				
	2 Wire Unbundled Copper Loop - Non-Designed - Zone 3	I	3	UEQ	UEQ2X	16.87	35.27	15.60				15.20				
	Unbundled Miscellaneous Rate Element, Tag Loop at End User Premise			UEQ	URETL		8.33	0.83				15.20				
	Order Coordination 2 Wire Unbundled Copper Loop - Non-Designed (per loop)			UEQ	USBMC		7.92	7.92								
	Unbundled Copper Loop, Non-Design Copper Loop, billing for BST providing make-up (Engineering Information - E.I.)			UEQ	UEQMU		13.04	13.04								
	Loop Testing - Basic 1st Half Hour			UEQ	URET1		33.17	33.17				15.20				
	Loop Testing - Basic Additional Half Hour			UEQ	URETA		19.28	19.28				15.20				
	CLEC to CLEC Conversion Charge Without Outside Dispatch (UCL-ND)			UEQ	UREWO		14.25	7.42				15.20				
UNBUNDLED EXCHANGE ACCESS LOOP																
2-WIRE ANALOG VOICE GRADE LOOP																
	2 Wire Analog Voice Grade Loop-Service Level 1-Line Splitting-Zone 1		1	UEPSR UEPSB	UEALS	12.90	36.54	16.87				15.20				
	2 Wire Analog Voice Grade Loop-Service Level 1-Line Splitting-Zone 1		1	UEPSR UEPSB	UEABS	12.90	36.54	16.87				15.20				
	2 Wire Analog Voice Grade Loop- Service Level 1-Line Splitting-Zone 2		2	UEPSR UEPSB	UEALS	23.33	36.54	16.87				15.20				
	2 Wire Analog Voice Grade Loop- Service Level 1-Line Splitting-Zone 2		2	UEPSR UEPSB	UEABS	23.33	36.54	16.87				15.20				
	2 Wire Analog Voice Grade Loop-Service Level 1-Line Splitting-Zone 3		3	UEPSR UEPSB	UEALS	48.43	36.54	16.87				15.20				
	2 Wire Analog Voice Grade Loop-Service Level 1-Line Splitting-Zone 3		3	UEPSR UEPSB	UEABS	48.43	36.54	16.87				15.20				
UNBUNDLED EXCHANGE ACCESS LOOP																
2-WIRE ANALOG VOICE GRADE LOOP																
	2-Wire Analog Voice Grade Loop - Service Level 2 w/Loop or Ground Start Signaling - Zone 1		1	UEA	UEAL2	14.93	102.10	65.72				15.20				
	2-Wire Analog Voice Grade Loop - Service Level 2 w/Loop or Ground Start Signaling - Zone 2		2	UEA	UEAL2	25.35	102.10	65.72				15.20				
	2-Wire Analog Voice Grade Loop - Service Level 2 w/Loop or Ground Start Signaling - Zone 3		3	UEA	UEAL2	50.46	102.10	65.72				15.20				
	Order Coordination for Specified Conversion Time (per LSR)			UEA	OCOSL		17.56									
	2-Wire Analog Voice Grade Loop - Service Level 2 w/Reverse Battery Signaling - Zone 1		1	UEA	UEAR2	14.93	102.10	65.72				15.20				
	2-Wire Analog Voice Grade Loop - Service Level 2 w/Reverse Battery Signaling - Zone 2		2	UEA	UEAR2	25.35	102.10	65.72				15.20				
	2-Wire Analog Voice Grade Loop - Service Level 2 w/Reverse Battery Signaling - Zone 3		3	UEA	UEAR2	50.46	102.10	65.72				15.20				
	Order Coordination for Specified Conversion Time (per LSR)			UEA	OCOSL		17.56									
	CLEC to CLEC Conversion Charge without outside dispatch			UEA	UREWO		87.59	36.30				15.20				
	Loop Tagging - Service Level 2 (SL2)			UEA	URETL		11.20	1.10				15.20				
4-WIRE ANALOG VOICE GRADE LOOP																
	4-Wire Analog Voice Grade Loop - Zone 1		1	UEA	UEAL4	30.81	127.40	91.02				15.20				
	4-Wire Analog Voice Grade Loop - Zone 2		2	UEA	UEAL4	38.32	127.40	91.02				15.20				
	4-Wire Analog Voice Grade Loop - Zone 3		3	UEA	UEAL4	60.39	127.40	91.02				15.20				
	Order Coordination for Specified Conversion Time (per LSR)			UEA	OCOSL		17.56									
	CLEC to CLEC Conversion Charge without outside dispatch			UEA	UREWO		87.59	36.30				15.20				
2-WIRE ISDN DIGITAL GRADE LOOP																
	2-Wire ISDN Digital Grade Loop - Zone 1		1	UDN	U1L2X	22.09	113.34	76.96				15.20				
	2-Wire ISDN Digital Grade Loop - Zone 2		2	UDN	U1L2X	35.28	113.34	76.96				15.20				
	2-Wire ISDN Digital Grade Loop - Zone 3		3	UDN	U1L2X	65.18	113.34	76.96				15.20				
	Order Coordination For Specified Conversion Time (per LSR)			UDN	OCOSL		17.56									
	CLEC to CLEC Conversion Charge without outside dispatch			UDN	UREWO		91.49	44.09				15.20				
2-WIRE Universal Digital Channel (UDC) COMPATIBLE LOOP																

UNBUNDLED NETWORK ELEMENTS - Louisiana														Attachment: 2		Exhibit: B	
CATEGORY		RATE ELEMENTS	Interim	Zone	BCS	USOC	RATES ($)					Svc Order Submitted Elec per LSR	Svc Order Submitted Manually per LSR	Incremental Charge - Manual Svc Order vs. Electronic-1st	Incremental Charge - Manual Svc Order vs. Electronic-Add'l	Incremental Charge - Manual Svc Order vs. Electronic-Disc 1st	Incremental Charge - Manual Svc Order vs. Electronic-Disc Add'l
							Rec	Nonrecurring		Nonrecurring Disconnect		OSS Rates($)					
								First	Add'l	First	Add'l	SOMEC	SOMAN	SOMAN	SOMAN	SOMAN	SOMAN
		2-Wire Universal Digital Channel (UDC) Compatible Loop - Zone 1		1	UDC	UDC2X	22.09	113.34	76.96				15.20				
		2-Wire Universal Digital Channel (UDC) Compatible Loop - Zone 2		2	UDC	UDC2X	35.28	113.34	76.96				15.20				
		2-Wire Universal Digital Channel (UDC) Compatible Loop - Zone 3		3	UDC	UDC2X	65.18	113.34	76.96				15.20				
		CLEC to CLEC Conversion Charge without outside dispatch			UDC	UREWO		91.49	44.09				15.20				
	2-WIRE ASYMMETRICAL DIGITAL SUBSCRIBER LINE (ADSL) COMPATIBLE LOOP																
		2 Wire Unbundled ADSL Loop including manual service inquiry & facility reservation - Zone 1		1	UAL	UAL2X	12.29	117.08	68.36				15.20				
		2 Wire Unbundled ADSL Loop including manual service inquiry & facility reservation - Zone 2		2	UAL	UAL2X	14.09	117.08	68.36				15.20				
		2 Wire Unbundled ADSL Loop including manual service inquiry & facility reservation - Zone 3		3	UAL	UAL2X	15.75	117.08	68.36				15.20				
		Order Coordination for Specified Conversion Time (per LSR)			UAL	OCOSL		17.56									
		2 Wire Unbundled ADSL Loop without manual service inquiry & facility reservaton - Zone 1		1	UAL	UAL2W	12.29	92.83	56.02				15.20				
		2 Wire Unbundled ADSL Loop without manual service inquiry & facility reservaton - Zone 2		2	UAL	UAL2W	14.09	92.83	56.02				15.20				
		2 Wire Unbundled ADSL Loop without manual service inquiry & facility reservaton - Zone 3		3	UAL	UAL2W	15.75	92.83	56.02				15.20				
		Order Coordination for Specified Conversion Time (per LSR)			UAL	OCOSL		17.56									
		CLEC to CLEC Conversion Charge without outside dispatch			UAL	UREWO		86.07	40.34				15.20				
	2-WIRE HIGH BIT RATE DIGITAL SUBSCRIBER LINE (HDSL) COMPATIBLE LOOP																
		2 Wire Unbundled HDSL Loop including manual service inquiry & facility reservation - Zone 1		1	UHL	UHL2X	9.79	125.50	76.77				15.20				
		2 Wire Unbundled HDSL Loop including manual service inquiry & facility reservation - Zone 2		2	UHL	UHL2X	11.52	125.50	76.77				15.20				
		2 Wire Unbundled HDSL Loop including manual service inquiry & facility reservation - Zone 3		3	UHL	UHL2X	12.74	125.50	76.77				15.20				
		Order Coordination for Specified Conversion Time (per LSR)			UHL	OCOSL		17.56									
		2 Wire Unbundled HDSL Loop without manual service inquiry and facility reservation - Zone 1		1	UHL	UHL2W	9.79	101.24	64.43				15.20				
		2 Wire Unbundled HDSL Loop without manual service inquiry and facility reservation - Zone 2		2	UHL	UHL2W	11.52	101.24	64.43				15.20				
		2 Wire Unbundled HDSL Loop without manual service inquiry and facility reservation - Zone 3		3	UHL	UHL2W	12.74	101.24	64.43				15.20				
		Order Coordination for Specified Conversion Time (per LSR)			UHL	OCOSL		17.56									
		CLEC to CLEC Conversion Charge without outside dispatch			UHL	UREWO		86.00	40.34				15.20				
	4-WIRE HIGH BIT RATE DIGITAL SUBSCRIBER LINE (HDSL) COMPATIBLE LOOP																
		4 Wire Unbundled HDSL Loop including manual service inquiry and facility reservation - Zone 1		1	UHL	UHL4X	16.24	153.26	104.54				15.20				
		4-Wire Unbundled HDSL Loop including manual service inquiry and facility reservation - Zone 2		2	UHL	UHL4X	16.65	153.26	104.54				15.20				
		4-Wire Unbundled HDSL Loop including manual service inquiry and facility reservation - Zone 3		3	UHL	UHL4X	17.34	153.26	104.54				15.20				
		Order Coordination for Specified Conversion Time (per LSR)			UHL	OCOSL		17.56									
		4-Wire Unbundled HDSL Loop without manual service inquiry and facility reservation - Zone 1		1	UHL	UHL4W	16.24	129.00	92.20				15.20				
		4-Wire Unbundled HDSL Loop without manual service inquiry and facility reservation - Zone 2		2	UHL	UHL4W	16.65	129.00	92.20				15.20				
		4-Wire Unbundled HDSL Loop without manual service inquiry and facility reservation - Zone 3		3	UHL	UHL4W	17.34	129.00	92.20				15.20				
		Order Coordination for Specified Conversion Time (per LSR)			UHL	OCOSL		17.56									
		CLEC to CLEC Conversion Charge without outside dispatch			UHL	UREWO		86.00	40.34				15.20				
	4-WIRE DS1 DIGITAL LOOP																
		4-Wire DS1 Digital Loop - Zone 1		1	USL	USLXX	85.70	245.16	152.98				15.20				
		4-Wire DS1 Digital Loop - Zone 2		2	USL	USLXX	194.96	245.16	152.98				15.20				
		4-Wire DS1 Digital Loop - Zone 3		3	USL	USLXX	491.94	245.16	152.98				15.20				

UNBUNDLED NETWORK ELEMENTS - Louisiana													Attachment: 2		Exhibit: B	
CATEGORY	RATE ELEMENTS	Interim	Zone	BCS	USOC	RATES ($)					Svc Order Submitted Elec per LSR	Svc Order Submitted Manually per LSR	Incremental Charge - Manual Svc Order vs. Electronic-1st	Incremental Charge - Manual Svc Order vs. Electronic-Add'l	Incremental Charge - Manual Svc Order vs. Electronic-Disc 1st	Incremental Charge - Manual Svc Order vs. Electronic-Disc Add'l
						Rec	Nonrecurring		Nonrecurring Disconnect		OSS Rates($)					
							First	Add'l	First	Add'l	SOMEC	SOMAN	SOMAN	SOMAN	SOMAN	SOMAN
	Order Coordination for Specified Conversion Time (per LSR)			USL	OCOSL		17.56									
	CLEC to CLEC Conversion Charge without outside dispatch			USL	UREWO		100.93	42.98				15.20				
4-WIRE 19.2, 56 OR 64 KBPS DIGITAL GRADE LOOP																
	4 Wire Unbundled Digital 19.2 Kbps		1	UDL	UDL19	30.99	121.86	85.48				15.20				
	4 Wire Unbundled Digital 19.2 Kbps		2	UDL	UDL19	36.78	121.86	85.48				15.20				
	4 Wire Unbundled Digital 19.2 Kbps		3	UDL	UDL19	38.92	121.86	85.48				15.20				
	4 Wire Unbundled Digital Loop 56 Kbps - Zone 1		1	UDL	UDL56	30.99	121.86	85.48				15.20				
	4 Wire Unbundled Digital Loop 56 Kbps - Zone 2		2	UDL	UDL56	36.78	121.86	85.48				15.20				
	4 Wire Unbundled Digital Loop 56 Kbps - Zone 3		3	UDL	UDL56	38.92	121.86	85.48				15.20				
	Order Coordination for Specified Conversion Time (per LSR)			UDL	OCOSL		17.56									
	4 Wire Unbundled Digital Loop 64 Kbps - Zone 1		1	UDL	UDL64	30.99	121.86	85.48				15.20				
	4 Wire Unbundled Digital Loop 64 Kbps - Zone 2		2	UDL	UDL64	36.78	121.86	85.48				15.20				
	4 Wire Unbundled Digital Loop 64 Kbps - Zone 3		3	UDL	UDL64	38.92	121.86	85.48				15.20				
	Order Coordination for Specified Conversion Time (per LSR)			UDL	OCOSL		17.56									
	CLEC to CLEC Conversion Charge without outside dispatch			UDL	UREWO		101.97	49.67				15.20				
2-WIRE Unbundled COPPER LOOP																
	2-Wire Unbundled Copper Loop/Short including manual service inquiry & facility reservation - Zone 1		1	UCL	UCLPB	12.29	116.18	67.46				15.20				
	2-Wire Unbundled Copper Loop/Short including manual service inquiry & facility reservation - Zone 2		2	UCL	UCLPB	14.09	116.18	67.46				15.20				
	2 Wire Unbundled Copper Loop/Short including manual service inquiry & facility reservation - Zone 3		3	UCL	UCLPB	15.75	116.18	67.46				15.20				
	Order Coordination for Unbundled Copper Loops (per loop)			UCL	UCLMC		7.92	7.92								
	2-Wire Unbundled Copper Loop/Short without manual service inquiry and facility reservation - Zone 1		1	UCL	UCLPW	12.29	91.92	55.12				15.20				
	2-Wire Unbundled Copper Loop/Short without manual service inquiry and facility reservation - Zone 2		2	UCL	UCLPW	14.09	91.92	55.12				15.20				
	2-Wire Unbundled Copper Loop/Short without manual service inquiry and facility reservation - Zone 3		3	UCL	UCLPW	15.75	91.92	55.12				15.20				
	Order Coordination for Unbundled Copper Loops (per loop)			UCL	UCLMC		7.92	7.92								
	2-Wire Unbundled Copper Loop/Long - includes manual srvc. inquiry and facility reservation - Zone 1		1	UCL	UCL2L	17.21	116.18	67.46				15.20				
	2-Wire Unbundled Copper Loop/Long - includes manual svc. inquiry and facility reservation - Zone 2		2	UCL	UCL2L	24.98	116.18	67.46				15.20				
	2-Wire Unbundled Copper Loop/Long - includes manual svc. inquiry and facility reservation - Zone 3		3	UCL	UCL2L	39.57	116.18	67.46				15.20				
	Order Coordination for Unbundled Copper Loops (per loop)			UCL	UCLMC		7.92	7.92								
	2-Wire Unbundled Copper Loop/Long - without manual service inquiry and facility reservation - Zone 1		1	UCL	UCL2W	17.21	91.92	55.12				15.20				
	2-Wire Unbundled Copper Loop/Long - without manual service inquiry and facility reservation - Zone 2		2	UCL	UCL2W	24.98	91.92	55.12				15.20				
	2-Wire Unbundled Copper Loop/Long - without manual service inquiry and facility reservation - Zone 3		3	UCL	UCL2W	39.57	91.92	55.12				15.20				
	Order Coordination for Unbundled Copper Loops (per loop)			UCL	UCLMC		7.92	7.92								
	CLEC to CLEC Conversion Charge without outside dispatch (UCL-Des)			UCL	UREWO		91.92	42.47				15.20				
4-WIRE COPPER LOOP																
	4-Wire Copper Loop/Short - including manual service inquiry and facility reservation - Zone 1		1	UCL	UCL4S	22.27	139.69	90.96				15.20				
	4-Wire Copper Loop/Short - including manual service inquiry and facility reservation - Zone 2		2	UCL	UCL4S	18.95	139.69	90.96				15.20				
	4-Wire Copper Loop/Short - including manual service inquiry and facility reservation - Zone 3		3	UCL	UCL4S	10.99	139.69	90.96				15.20				
	Order Coordination for Unbundled Copper Loops (per loop)			UCL	UCLMC		7.92	7.92								
	4-Wire Copper Loop/Short - without manual service inquiry and facility reservation - Zone 1		1	UCL	UCL4W	22.27	115.43	78.63				15.20				
	4-Wire Copper Loop/Short - without manual service inquiry and facility reservation - Zone 2		2	UCL	UCL4W	18.95	115.43	78.63				15.20				

UNBUNDLED NETWORK ELEMENTS - Louisiana														Attachment: 2		Exhibit: B	
CATEGORY		RATE ELEMENTS	Interim	Zone	BCS	USOC	RATES ($)					Svc Order Submitted Elec per LSR	Svc Order Submitted Manually per LSR	Incremental Charge - Manual Svc Order vs. Electronic-1st	Incremental Charge - Manual Svc Order vs. Electronic-Add'l	Incremental Charge - Manual Svc Order vs. Electronic-Disc 1st	Incremental Charge - Manual Svc Order vs. Electronic-Disc Add'l
							Rec	Nonrecurring		Nonrecurring Disconnect		OSS Rates($)					
								First	Add'l	First	Add'l	SOMEC	SOMAN	SOMAN	SOMAN	SOMAN	SOMAN
		4-Wire Copper Loop/Short - without manual service inquiry and facility reservation - Zone 3		3	UCL	UCL4W	10.99	115.43	78.63				15.20				
		Order Coordination for Unbundled Copper Loops (per loop)			UCL	UCLMC		7.92	7.92								
		4-Wire Unbundled Copper Loop/Long - includes manual svc. inquiry and facility reservation - Zone 1		1	UCL	UCL4L	26.17	139.69	90.96				15.20				
		4-Wire Unbundled Copper Loop/Long - includes manual svc. inquiry and facility reservation - Zone 2		2	UCL	UCL4L	28.47	139.69	90.96				15.20				
		4-Wire Unbundled Copper Loop/Long - includes manual svc. inquiry and facility reservation - Zone 3		3	UCL	UCL4L	62.93	139.69	90.96				15.20				
		Order Coordination for Unbundled Copper Loops (per loop)			UCL	UCLMC		7.92	7.92								
		4-Wire Unbundled Copper Loop/Long - without manual svc. inquiry and facility reservation - Zone 1		1	UCL	UCL4O	26.17	115.43	78.63				15.20				
		4-Wire Unbundled Copper Loop/Long - without manual svc. inquiry and facility reservation - Zone 2		2	UCL	UCL4O	28.47	115.43	78.63				15.20				
		4-Wire Unbundled Copper Loop/Long - without manual svc. inquiry and facility reservation - Zone 3		3	UCL	UCL4O	62.93	115.43	78.63				15.20				
		Order Coordination for Unbundled Copper Loops (per loop)			UCL	UCLMC		7.92	7.92								
		CLEC to CLEC Conversion Charge without outside dispatch (UCL-Des)			UCL	UREWO		91.92	42.47				15.20				
LOOP MODIFICATION																	
		Unbundled Loop Modification, Removal of Load Coils - 2 Wire pair less than or equal to 18k ft			UAL, UHL, UCL, UEQ, ULS, UEA, UEANL, UEPSR, UEPSB	ULM2L		0.00	0.00				15.20				
		Unbundled Loop Modification, Removal of Load Coils - 2 wire greater than 18k ft			UCL, ULS, UEQ	ULM2G		0.00	0.00				15.20				
		Unbundled Loop Modification Removal of Load Coils - 4 Wire less than or equal to 18K ft			UHL, UCL, UEA	ULM4L		0.00	0.00				15.20				
		Unbundled Loop Modification Removal of Load Coils - 4 Wire pair greater than 18k ft			UCL	ULM4G		0.00	0.00				15.20				
		Unbundled Loop Modification Removal of Bridged Tap Removal, per unbundled loop			UAL, UHL, UCL, UEQ, ULS, UEA, UEANL, UEPSR, UEPSB	ULMBT		12.15	12.15				15.20				
SUB-LOOPS																	
	Sub-Loop Distribution																
		Sub-Loop - Per Cross Box Location - CLEC Feeder Facility Set-Up	I		UEANL	USBSA		144.09	144.09				15.20				
		Sub-Loop - Per Cross Box Location - Per 25 Pair Panel Set-Up	I		UEANL	USBSB		10.99	10.99				15.20				
		Sub-Loop - Per Building Equipment Room - CLEC Feeder Facility Set-Up	I		UEANL	USBSC		86.16	86.16				15.20				
		Sub-Loop - Per Building Equipment Room - Per 25 Pair Panel Set-Up	I		UEANL	USBSD		27.13	27.13				15.20				
		Sub-Loop Distribution Per 2-Wire Analog Voice Grade Loop - Zone 1	I	1	UEANL	USBN2	7.57	63.89	30.06				15.20				
		Sub-Loop Distribution Per 2-Wire Analog Voice Grade Loop - Zone 2	I	2	UEANL	USBN2	12.75	63.89	30.06				15.20				
		Sub-Loop Distribution Per 2-Wire Analog Voice Grade Loop - Zone 3	I	3	UEANL	USBN2	21.45	63.89	30.06				15.20				
		Order Coordination for Unbundled Sub-Loops, per sub-loop pair			UEANL	USBMC		7.92	7.92								
		Sub-Loop Distribution Per 4-Wire Analog Voice Grade Loop - Zone 1		1	UEANL	USBN4	11.76	76.75	42.92				15.20				
		Sub-Loop Distribution Per 4-Wire Analog Voice Grade Loop - Zone 2		2	UEANL	USBN4	16.84	76.75	42.92				15.20				
		Sub-Loop Distribution Per 4-Wire Analog Voice Grade Loop - Zone 3		3	UEANL	USBN4	19.27	76.75	42.92				15.20				

UNBUNDLED NETWORK ELEMENTS - Louisiana														Attachment: 2		Exhibit: B	
CATEGORY		RATE ELEMENTS	Interim	Zone	BCS	USOC	RATES ($)					Svc Order Submitted Elec per LSR	Svc Order Submitted Manually per LSR	Incremental Charge - Manual Svc Order vs. Electronic-1st	Incremental Charge - Manual Svc Order vs. Electronic-Add'l	Incremental Charge - Manual Svc Order vs. Electronic-Disc 1st	Incremental Charge - Manual Svc Order vs. Electronic-Disc Add'l
							Rec	Nonrecurring		Nonrecurring Disconnect		OSS Rates($)					
								First	Add'l	First	Add'l	SOMEC	SOMAN	SOMAN	SOMAN	SOMAN	SOMAN
		Order Coordination for Unbundled Sub-Loops, per sub-loop pair			UEANL	USBMC		7.92	7.92								
		Sub-Loop 2-Wire Intrabuilding Network Cable (INC)	I		UEANL	USBR2	2.91	51.48	17.65				15.20				
		Order Coordination for Unbundled Sub-Loops, per sub-loop pair			UEANL	USBMC		7.92	7.92								
		Sub-Loop 4-Wire Intrabuilding Network Cable (INC)	I		UEANL	USBR4	6.58	57.54	23.71				15.20				
		Order Coordination for Unbundled Sub-Loops, per sub-loop pair			UEANL	USBMC		7.92	7.92								
		2 Wire Copper Unbundled Sub-Loop Distribution - Zone 1	I	1	UEF	UCS2X	6.26	63.89	30.06				15.20				
		2 Wire Copper Unbundled Sub-Loop Distribution - Zone 2	I	2	UEF	UCS2X	10.07	63.89	30.06				15.20				
		2 Wire Copper Unbundled Sub-Loop Distribution - Zone 3	I	3	UEF	UCS2X	12.70	63.89	30.06				15.20				
		Order Coordination for Unbundled Sub-Loops, per sub-loop pair			UEF	USBMC		7.92	7.92								
		4 Wire Copper Unbundled Sub-Loop Distribution - Zone 1	I	1	UEF	UCS4X	8.03	76.75	42.92				15.20				
		4 Wire Copper Unbundled Sub-Loop Distribution - Zone 2	I	2	UEF	UCS4X	10.71	76.75	42.92				15.20				
		4 Wire Copper Unbundled Sub-Loop Distribution - Zone 3	I	3	UEF	UCS4X	6.08	76.75	42.92				15.20				
		Order Coordination for Unbundled Sub-Loops, per sub-loop pair			UEF	USBMC		7.92	7.92								
	Unbundled Network Terminating Wire (UNTW)																
		Unbundled Network Terminating Wire (UNTW) per Pair			UENTW	UENPP	0.3454	14.72	14.72				15.20				
	Network Interface Device (NID)																
		Network Interface Device (NID) - 1-2 lines			UENTW	UND12		42.26	27.83				15.20				
		Network Interface Device (NID) - 1-6 lines			UENTW	UND16		62.86	48.43				15.20				
		Network Interface Device Cross Connect - 2 W			UENTW	UNDC2		5.73	5.73				15.20				
		Network Interface Device Cross Connect - 4W			UENTW	UNDC4		5.73	5.73				15.20				
SUB-LOOPS																	
	Sub-Loop Feeder																
		USL-Feeder, DS0 Set-up per Cross Box location - CLEC Distribution Facility set-up			UEA, UDN,UCL,UDL,UDC	USBFW		144.09					15.20				
		USL Feeder - DS0 Set-up per Cross Box location - per 25 pair set-up			UEA, UDN,UCL,UDL,UDC	USBFX		10.99	10.99				15.20				
		USL Feeder DS1 Set-up at DSX location, per DS1 termination			USL	USBFZ		568.98	11.30				15.20				
		Unbundled Sub-Loop Feeder Loop, 2 Wire Ground Start, Voice Grade - Zone 1		1	UEA	USBFA	8.71	89.81	54.35				15.20				
		Unbundled Sub-Loop Feeder Loop, 2 Wire Ground-Start, Voice Grade - Zone 2		2	UEA	USBFA	13.64	89.81	54.35				15.20				
		Unbundled Sub-Loop Feeder Loop, Per 2 Wire Ground-Start, Voice Grade - Zone 3		3	UEA	USBFA	30.21	89.81	54.35				15.20				
		Order Coordination for Specified Conversion Time, per LSR			UEA	OCOSL		17.56									
		Unbundlde Sub-Loop Feeder Loop, 2 Wire Loop-Start, Voice Grade - Zone 1		1	UEA	USBFB	8.71	89.81	54.35				15.20				
		Unbundled Sub-Loop Feeder Loop, 2 Wire Loop-Start, Voice Grade - Zone 2		2	UEA	USBFB	13.64	89.81	54.35				15.20				
		Unbundled Sub-Loop Feeder Loop, 2 Wire Start Loop, Voice Grade - Zone 3		3	UEA	USBFB	30.21	89.81	54.35				15.20				
		Order Coordination for Specified Time Conversion, per LSR			UEA	OCOSL		17.56									
		Unbundled Sub-Loop Feeder Loop, 2 Wire Reverse Battery, Voice Grade - Zone 1		1	UEA	USBFC	8.71	89.81	54.35				15.20				
		Unbundled Sub-Loop Feeder Loop, 2 Wire Reverse Battery, Voice Grade - Zone 2		2	UEA	USBFC	13.64	89.81	54.35				15.20				
		Unbundled Sub-Loop Feeder Loop, 2 Wire Analog Reverse Battery, Voice Grade - Zone 3		3	UEA	USBFC	30.21	89.81	54.35				15.20				
		Order Coordination For Specified Conversion Time, per LSR			UEA	OCOSL		17.56									
		Unbundled Sub-Loop Feeder Loop, 4 Wire Ground-Start, Voice Grade - Zone 1		1	UEA	USBFD	21.44	103.69	67.31				15.20				
		Unbundled Sub-Loop Feeder Loop, 4 Wire Ground-Start, Voice Grade - Zone 2		2	UEA	USBFD	24.66	103.69	67.31				15.20				
		Unbundled Sub-Loop Feeder Loop, 4 Wire Ground Start, Voice Grade - Zone 3		3	UEA	USBFD	42.84	103.69	67.31				15.20				

CATEGORY	RATE ELEMENTS	Interim	Zone	BCS	USOC	RATES ($)					Svc Order Submitted Elec per LSR	Svc Order Submitted Manually per LSR	Attachment: 2		Exhibit: B	
													Incremental Charge - Manual Svc Order vs. Electronic-1st	Incremental Charge - Manual Svc Order vs. Electronic-Add'l	Incremental Charge - Manual Svc Order vs. Electronic-Disc 1st	Incremental Charge - Manual Svc Order vs. Electronic-Disc Add'l
						Rec	Nonrecurring		Nonrecurring Disconnect		OSS Rates($)					
							First	Add'l	First	Add'l	SOMEC	SOMAN	SOMAN	SOMAN	SOMAN	SOMAN
	Order Coordination For Specified Conversion Time, Per LSR			UEA	OCOSL		17.56									
	Unbundled Sub-Loop Feeder Loop, 4 Wire Loop-Start, Voice Grade - Zone 1		1	UEA	USBFE	21.44	103.69	67.31				15.20				
	Unbundled Sub-Loop Feeder Loop, 4 Wire Loop-Start, Voice Grade - Zone 2		2	UEA	USBFE	24.66	103.69	67.31				15.20				
	Unbundled Sub-Loop Feeder Loop, 4 Wire Loop-Start, Voice Grade - Zone 3		3	UEA	USBFE	42.84	103.69	67.31				15.20				
	Order Coordination For Specified Conversion Time, Per LSR			UEA	OCOSL		17.56									
	Unbundled Sub-Loop Feeder Loop, 2 Wire ISDN BRI - Zone 1		1	UDN	USBFF	15.44	102.58	66.20				15.20				
	Unbundled Sub-Loop Feeder Loop, 2-Wire ISDN BRI - Zone 2		2	UDN	USBFF	23.32	102.58	66.20				15.20				
	Unbundled Sub-Loop Feeder Loop, 2-Wire ISDN BRI - Zone 3		3	UDN	USBFF	44.57	102.58	66.20				15.20				
	Order Coordination For Specified Conversion Time, Per LSR			UDN	OCOSL		17.56									
	Unbundled Sub-Loop Feeder, 2 Wire UDC (IDSL compatible)		1	UDC	USBFS	15.44	102.58	66.20				15.20				
	Unbundled Sub-Loop Feeder, 2 Wire UDC (IDSL compatible)		2	UDC	USBFS	23.32	102.58	66.20				15.20				
	Unbundled Sub-Loop Feeder, 2 Wire UDC (IDSL compatible)		3	UDC	USBFS	44.57	102.58	66.20				15.20				
	Unbundled Sub-Loop Feeder Loop, 4-Wire DS1 - Zone 1		1	USL	USBFG	55.38	98.15	61.77				15.20				
	Unbundled Sub-Loop Feeder Loop, 4-Wire DS1 - Zone 2		2	USL	USBFG	167.83	98.15	61.77				15.20				
	Unbundled Sub-Loop Feeder Loop, 4-Wire DS1 - Zone 3		3	USL	USBFG	469.87	98.15	61.77				15.20				
	Order Coordination For Specified Conversion Time, Per LSR			USL	OCOSL		17.56									
	Unbundled Sub-Loop Feeder, 2-Wire Copper Loop - Zone 1		1	UCL	USBFH	6.96	81.36	44.98				15.20				
	Unbundled Sub-Loop Feeder Loop, 2-Wire Copper Loop - Zone 2		2	UCL	USBFH	4.97	81.36	44.98				15.20				
	Unbundled Sub-Loop Feeder Loop, 2-Wire Copper Loop - Zone 3		3	UCL	USBFH	3.99	81.36	44.98				15.20				
	Order Coordination For Specified Conversion Time, per LSR			UCL	OCOSL		17.56									
	Sub-Loop Feeder - Per 4-Wire Copper Loop - Zone 1		1	UCL	USBFJ	15.68	98.07	61.69				15.20				
	Sub-Loop Feeder - Per 4-Wire Copper Loop - Zone 2		2	UCL	USBFJ	9.68	98.07	61.69				15.20				
	Sub-Loop Feeder - Per 4-Wire Copper Loop - Zone 3		3	UCL	USBFJ	6.39	98.07	61.69				15.20				
	Order Coordination For Specified Conversion Time, per LSR			UCL	OCOSL		17.56									
	Sub-Loop Feeder - Per 4-Wire 19.2 Kbps Digital Grade Loop		1	UDL	USBFN	22.61	98.15	61.77				15.20				
	Sub-Loop Feeder - Per 4-Wire 19.2 Kbps Digital Grade Loop		2	UDL	USBFN	22.87	98.15	61.77				15.20				
	Sub-Loop Feeder - Per 4-Wire 19.2 Kbps Digital Grade Loop		3	UDL	USBFN	24.25	98.15	61.77				15.20				
	Sub-Loop Feeder - Per 4-Wire 56 Kbps Digital Grade Loop - Zone 1		1	UDL	USBFO	22.61	98.15	61.77				15.20				
	Sub-Loop Feeder - Per 4-Wire 56 Kbps Digital Grade Loop - Zone 2		2	UDL	USBFO	22.87	98.15	61.77				15.20				
	Sub-Loop Feeder - Per 4-Wire 56 Kbps Digital Grade Loop - Zone 3		3	UDL	USBFO	24.25	98.15	61.77				15.20				
	Order Coordination For Specified Time Conversion, per LSR			UDL	OCOSL		17.56									
	Sub-Loop Feeder - Per 4-Wire 64 Kbps Digital Grade Loop - Zone 1		1	UDL	USBFP	22.61	98.15	61.77				15.20				
	Sub-Loop Feeder - Per 4-Wire 64 Kbps Digital Grade Loop - Zone 2		2	UDL	USBFP	22.87	98.15	61.77				15.20				
	Sub-Loop Feeder - Per 4-Wire 64 Kbps Digital Grade Loop - Zone 3		3	UDL	USBFP	24.25	98.15	61.77				15.20				
	Order Coordination For Specified Conversion Time, per LSR			UDL	OCOSL		17.56									
SUB-LOOPS																
Sub-Loop Feeder																
	Sub Loop Feeder - DS3 - Per Mile Per Month	I		UE3	1L5SL	17.00										
	Sub Loop Feeder - DS3 - Facility Termination Per Month	I		UE3	USBF1	368.44	3,397.56	406.56				15.20				
	Sub Loop Feeder – STS-1 – Per Mile Per Month	I		UDLSX	1L5SL	17.00										
	Sub Loop Feeder - STS-1 - Facility Termination Per Month	I		UDLSX	USBF7	395.92	3,397.56	406.56				15.20				
UNBUNDLED LOOP CONCENTRATION																
	Unbundled Loop Concentration - System A (TR008)			ULC	UCT8A	374.26	316.00	316.00				15.20				
	Unbundled Loop Concentration - System B (TR008)			ULC	UCT8B	53.40	131.67	131.67				15.20				
	Unbundled Loop Concentration - System A (TR303)			ULC	UCT3A	412.08	316.00	316.00				15.20				
	Unbundled Loop Concentration - System B (TR303)			ULC	UCT3B	89.98	131.67	131.67				15.20				
	Unbundled Loop Concentration - DS1 Loop Interface Card			ULC	UCTCO	5.12	61.46	44.74				15.20				

UNBUNDLED NETWORK ELEMENTS - Louisiana														Attachment: 2		Exhibit: B	
CATEGORY		RATE ELEMENTS	Interim	Zone	BCS	USOC	RATES ($)					Svc Order Submitted Elec per LSR	Svc Order Submitted Manually per LSR	Incremental Charge - Manual Svc Order vs. Electronic-1st	Incremental Charge - Manual Svc Order vs. Electronic-Add'l	Incremental Charge - Manual Svc Order vs. Electronic-Disc 1st	Incremental Charge - Manual Svc Order vs. Electronic-Disc Add'l
							Rec	Nonrecurring		Nonrecurring Disconnect		OSS Rates($)					
								First	Add'l	First	Add'l	SOMEC	SOMAN	SOMAN	SOMAN	SOMAN	SOMAN
		Unbundled Loop Concentration - ISDN Loop Interface (Brite Card)			UDN	ULCC1	8.12	10.23	10.18				15.20				
		Unbundled Loop Concentration - UDC Loop Interface (Brite Card)			UDC	ULCCU	8.12	10.23	10.18				15.20				
		Unbundled Loop Concentration - -2 Wire Voice-Loop Start or Ground Start Loop Interface (POTS Card)			UEA	ULCC2	2.03	10.23	10.18				15.20				
		Unbundled Loop Concentration - 2 Wire Voice - Reverse Battery Loop Interface (SPOTS Card)			UEA	ULCCR	12.07	10.23	10.18				15.20				
		Unbundled Loop Concentration - 4 Wire Voice Loop Interface (Specials Card)			UEA	ULCC4	7.20	10.23	10.18				15.20				
		Unbundled Loop Concentration - TEST CIRCUIT Card			ULC	UCTTC	35.19	10.23	10.18				15.20				
		Unbundled Loop Concentration - Digital 19.2 Kbps Data Loop Interface			UDL	ULCC7	10.67	10.23	10.18				15.20				
		Unbundled Loop Concentration - Digital 56 Kbps Data Loop Interface			UDL	ULCC5	10.67	10.23	10.18				15.20				
		Unbundled Loop Concentration - Digital 64 Kbps Data Loop Interface			UDL	ULCC6	10.67	10.23	10.18				15.20				
UNE OTHER, PROVISIONING ONLY - NO RATE																	
		NID - Dispatch and Service Order for NID installation			UENTW	UNDBX	0.00	0.00									
		UNTW Circuit Id Establishment, Provisioning Only - No Rate			UENTW	UENCE	0.00	0.00									
		Unbundled Contract Name, Provisioning Only - No Rate			UEANL,UEF,UEQ,UENTW	UNECN	0.00	0.00									
UNE OTHER, PROVISIONING ONLY - NO RATE																	
		Unbundled Contact Name, Provisioning Only - no rate			UAL,UCL,UDC,UDL,UDN,UEA,UHL,ULC	UNECN	0.00	0.00									
		Unbundled Sub-Loop Feeder-2 Wire Cross Box Jumper - no rate			UEA,UDN,UCL,UDC	USBFQ	0.00	0.00									
		Unbundled Sub-Loop Feeder-4 Wire Cross Box Jumper - no rate			UEA,USL,UCL,UDL	USBFR	0.00	0.00									
		Unbundled DS1 Loop - Superframe Format Option - no rate			USL	CCOSF	0.00	0.00									
		Unbundled DS1 Loop - Expanded Superframe Format option - no rate			USL	CCOEF	0.00	0.00									
HIGH CAPACITY UNBUNDLED LOCAL LOOP																	
	NOTE: minimum billing period of three months for DS3/STS-1 Local Loop																
		High Capacity Unbundled Local Loop - DS3 - Per Mile per month			UE3	1L5ND	10.04										
		High Capacity Unbundled Local Loop - DS3 - Facility Termination per month			UE3	UE3PX	362.34	438.46	256.30				15.20				
		High Capacity Unbundled Local Loop - STS-1 - Per Mile per month			UDLSX	1L5ND	10.04										
		High Capacity Unbundled Local Loop - STS-1 - Facility Termination per month			UDLSX	UDLS1	374.56	438.46	256.30				15.20				
LOOP MAKE-UP																	
		Loop Makeup - Preordering Without Reservation, per working or spare facility queried (Manual).			UMK	UMKLW		23.29	23.29								
		Loop Makeup - Preordering With Reservation, per spare facility queried (Manual).			UMK	UMKLP		24.70	24.70								
HIGH FREQUENCY SPECTRUM																	
	LINE SHARING																
	SPLITTERS-CENTRAL OFFICE BASED																
		Line Sharing Splitter, per System 96 Line Capacity			ULS	ULSDA	187.17	183.33	0.00				15.20				
		Line Sharing Splitter, per System 24 Line Capacity			ULS	ULSDB	46.79	183.33	0.00				15.20				
		Line Sharing Splitter, Per System, 8 Line Capacity	I		ULS	ULSD8	15.59	183.33	0.00				15.20				
		Line Sharing-DLEC Owned Splitter in CO-CFA activaton-deactivation (per LSOD)			ULS	ULSDG		83.98	0.00				15.20				
	END USER ORDERING-CENTRAL OFFICE BASED-HIGH FREQUENCY SPECTRUM AKA LINE SHARING																
		Line Sharing - per Line Activation (BST Owned Splitter)			ULS	ULSDC	0.61	17.97	10.29				15.20				

UNBUNDLED NETWORK ELEMENTS - Louisiana														Attachment: 2		Exhibit: B	
CATEGORY		RATE ELEMENTS	Interim	Zone	BCS	USOC	RATES ($)					Svc Order Submitted Elec per LSR	Svc Order Submitted Manually per LSR	Incremental Charge - Manual Svc Order vs. Electronic-1st	Incremental Charge - Manual Svc Order vs. Electronic-Add'l	Incremental Charge - Manual Svc Order vs. Electronic-Disc 1st	Incremental Charge - Manual Svc Order vs. Electronic-Disc Add'l
							Rec	Nonrecurring		Nonrecurring Disconnect		OSS Rates($)					
								First	Add'l	First	Add'l	SOMEC	SOMAN	SOMAN	SOMAN	SOMAN	SOMAN
		Line Sharing - per Subsequent Activity per Line Rearrangement(BST Owned Splitter)			ULS	ULSDS		15.91	7.95				15.20				
		Line Sharing - per Subsequent Activity per Line Rearrangement(DLEC Owned Splitter)			ULS	ULSCS		15.91	7.95				15.20				
		Line Sharing - per Line Activation (DLEC owned Splitter)	I		ULS	ULSCC	0.61	47.44	19.31				15.20				
	LINE SPLITTING																
	END USER ORDERING-CENTRAL OFFICE BASED																
		Line Splitting - per line activation DLEC owned splitter	I		UEPSR UEPSB	UREOS	0.61										
		Line Splitting - per line activation BST owned - physical	I		UEPSR UEPSB	UREBP	0.61	17.97	10.29				15.20				
		Line Splitting - per line activation BST owned - virtual	I		UEPSR UEPSB	UREBV	0.61	17.97	10.29				15.20				
	REMOTE SITE HIGH FREQUENCY SPECTRUM																
	SPLITTERS-REMOTE SITE																
		Remote Site Line Share BellSouth Owned Splitter, 24 Port	I		ULS	ULSRB	40.12	115.24	0.00				15.20				
		Remote Site Line Share Cable Pair Activation CLEC Owned at RS and Deactivation	I		ULS	ULSTG		96.00	0.00				15.20				
	END USER ORDERING-REMOTE SITE HIGH FREQUENCY SPECTRUM AKA REMOTE SITE LINE SHARING																
		Remote Site Line Share Line Activationfor End User Served at RS, BST Splitter	I		ULS	ULSRC	0.61	36.97	21.17				15.20				
		RS Line Share Line Activation for End User served at RS, CLEC Splitter	I		ULS	ULSTC	0.61	36.97	21.17				15.20				
		Remote Site Line Share Subsequent Activity-RS BST Owned Splitter	I		ULS	ULSRS		49.08	17.80				15.20				
		Remote Site Line Share Subsequent Activity-RS CLEC Owned Splitter	I		ULS	ULSTS		49.08	17.80				15.20				
UNBUNDLED DEDICATED TRANSPORT																	
	NOTE: INTEROFFICE CHANNEL DEDICATED TRANSPORT - minimum billing period - below DS3=one month, DS3/STS-1=four months																
	INTEROFFICE CHANNEL - DEDICATED TRANSPORT																
		Interoffice Channel - Dedicated Transport - 2-Wire Voice Grade - Per Mile per month			U1TVX	1L5XX	0.013										
		Interoffice Channel - Dedicated Transport- 2- Wire Voice Grade - Facility Termination			U1TVX	U1TV2	22.60	39.36	26.62				15.20				
		Interoffice Channel - Dedicated Transpor t- 2-Wire Voice Grade Rev Bat. - Per Mile per month			U1TVX	1L5XX	0.013										
		Interoffice Channel - Dedicated Transport- 2- Wire VG Rev Bat. - Facility Termination			U1TVX	U1TR2	22.60	39.36	26.62				15.20				
		Interoffice Channel - Dedicated Transport - 4-Wire Voice Grade - Per Mile per month			U1TVX	1L5XX	0.013										
		Interoffice Channel - Dedicated Transport - 4- Wire Voice Grade - Facility Termination			U1TVX	U1TV4	19.81	39.36	26.62				15.20				
		Interoffice Channel - Dedicated Transport - 56 kbps - per mile per month			U1TDX	1L5XX	0.013										
		Interoffice Channel - Dedicated Transport - 56 kbps - Facility Termination			U1TDX	U1TD5	15.61	39.37	26.62				15.20				
		Interoffice Channel - Dedicated Transport - 64 kbps - per mile per month			U1TDX	1L5XX	0.013										
		Interoffice Channel - Dedicated Transport - 64 kbps - Facility Termination			U1TDX	U1TD6	15.61	39.37	26.62				15.20				
		Interoffice Channel - Dedicated Channel - DS1 - Per Mile per month			U1TD1	1L5XX	0.2652										
		Interoffice Channel - Dedicated Tranport - DS1 - Facility Termination			U1TD1	U1TF1	70.47	86.69	79.44				15.20				
		Interoffice Channel - Dedicated Transport - DS3 - Per Mile per month			U1TD3	1L5XX	6.04										
		Interoffice Channel - Dedicated Transport - DS3 - Facility Termination per month			U1TD3	U1TF3	850.45	270.69	158.05				15.20				
		Interoffice Channel - Dedicated Transport - STS-1 - Per Mile per month			U1TS1	1L5XX	6.04										
		Interoffice Channel - Dedicated Transport - STS-1 - Facility Termination			U1TS1	U1TFS	830.19	270.69	158.05				15.20				

UNBUNDLED NETWORK ELEMENTS - Louisiana														Attachment: 2		Exhibit: B	
CATEGORY		RATE ELEMENTS	Interim	Zone	BCS	USOC	RATES ($)					Svc Order Submitted Elec per LSR	Svc Order Submitted Manually per LSR	Incremental Charge - Manual Svc Order vs. Electronic-1st	Incremental Charge - Manual Svc Order vs. Electronic-Add'l	Incremental Charge - Manual Svc Order vs. Electronic-Disc 1st	Incremental Charge - Manual Svc Order vs. Electronic-Disc Add'l
							Rec	Nonrecurring		Nonrecurring Disconnect		OSS Rates($)					
								First	Add'l	First	Add'l	SOMEC	SOMAN	SOMAN	SOMAN	SOMAN	SOMAN
	LOCAL CHANNEL - DEDICATED TRANSPORT																
	NOTE: LOCAL CHANNEL DEDICATED TRANSPORT - minimum billing period = below DS3=one month, DS3/STS-1=four months																
		Local Channel - Dedicated - 2-Wire Voice Grade			ULDVX	ULDV2	18.32	187.51	32.21				15.20				
		Local Channel - Dedicated - 2-Wire Voice Grade Rev Bat			ULDVX	ULDR2	18.32	187.51	32.21				15.20				
		Local Channel - Dedicated - 4-Wire Voice Grade			ULDVX	ULDV4	19.41	187.94	32.63				15.20				
		Local Channel - Dedicated - DS1 - Zone 1		1	ULDD1	ULDF1	39.18	172.34	149.27				15.20				
		Local Channel - Dedicated - DS1 - Zone 2		2	ULDD1	ULDF1	121.58	172.34	149.27				15.20				
		Local Channel - Dedicated - DS1 - Zone 3		3	ULDD1	ULDF1	70.02	172.34	149.27				15.20				
		Local Channel - Dedicated - DS3 - Per Mile per month			ULDD3	1L5NC	7.82										
		Local Channel - Dedicated - DS3 - Facility Termination			ULDD3	ULDF3	469.44	438.46	256.30				15.20				
		Local Channel - Dedicated - STS-1- Per Mile per month			ULDS1	1L5NC	7.82										
		Local Channel - Dedicated - STS-1 - Facility Termination			ULDS1	ULDFS	457.22	438.46	256.30				15.20				
DARK FIBER																	
		Dark Fiber, Four Fiber Strands, Per Route Mile or Fraction Thereof per month - Local Channel			UDF	1L5DC	52.23										
		NRC Dark Fiber - Local Channel			UDF	UDFC4		620.60	133.88				15.20				
		Dark Fiber, Four Fiber Strands, Per Route Mile or Fraction Thereof per month - Interoffice Channel			UDF	1L5DF	25.28										
		NRC Dark Fiber - Interoffice Channel			UDF	UDF14		620.60	133.88				15.20				
		Dark Fiber, Four Fiber Strands, Per Route Mile or Fraction Thereof per month - Local Loop			UDF	1L5DL	52.23										
		NRC Dark Fiber - Local Loop			UDF	UDFL4		620.60	133.88				15.20				
8XX ACCESS TEN DIGIT SCREENING																	
		8XX Access Ten Digit Screening, Per Call			OHD		0.0006387										
		8XX Access Ten Digit Screening, Reservation Charge Per 8XX Number Reserved			OHD	N8R1X		2.51	0.43				15.20				
		8XX Access Ten Digit Screening, Per 8XX No. Established W/O POTS Translations			OHD			5.77	0.78				15.20				
		8XX Access Ten Digit Screening, Per 8XX No. Established With POTS Translations			OHD	N8FTX		5.77	0.78				15.20				
		8XX Access Ten Digit Screening, Customized Area of Service Per 8XX Number			OHD	N8FCX		2.51	1.26				15.20				
		8XX Access Ten Digit Screening, Multiple InterLATA CXR Routing Per CXR Requested Per 8XX No.			OHD	N8FMX		2.93	1.68				15.20				
		8XX Access Ten Digit Screening, Change Charge Per Request			OHD	N8FAX		2.93	0.43				15.20				
		8XX Access Ten Digit Screening, Call Handling and Destination Features			OHD	N8FDX		2.51					15.20				
		8XX Access Ten Digit Screening, w/ 8XX No. Delivery, per query			OHD		0.0006387										
		8XX Access Ten Digit Screening, w/ POTS No. Delivery, per query			OHD		0.0006387										
LINE INFORMATION DATA BASE ACCESS (LIDB)																	
		LIDB Common Transport Per Query			OQT		0.0000221										
		LIDB Validation Per Query			OQU		0.0135077										
		LIDB Originating Point Code Establishment or Change			OQT, OQU	NRPBX		33.33					15.20				
SIGNALING (CCS7)																	
		CCS7 Signaling Termination, Per STP Port			UDB	PT8SX	147.60										
		CCS7 Signaling Usage, Per TCAP Message			UDB		0.000064										
		CCS7 Signaling Connection, Per link (A link)			UDB	TPP++	15.77	34.50	34.50				15.20				
		CCS7 Signaling Connection, Per link (B link) (also known as D link)			UDB	TPP++	15.77	34.50	34.50				15.20				
		CCS7 Signaling Usage, Per ISUP Message			UDB		0.000016										
		CCS7 Signaling Usage Surrogate, per link per LATA			UDB	STU56	732.10										
		CCS7 Signaling Point Code, per Originating Point Code Establishment or Change, per STP affected			UDB	CCAPO		28.17	28.17				15.20				
		CCS7 Signaling Point Code, per Destination Point Code Establishment or Change, Per Stp Affected			UDB	CCAPD		28.17	28.17				15.20				
E911 SERVICE																	
		Local Channel - Dedicated - 2-wr Voice Grade - Zone 1					18.32	187.51	32.21				15.20				

UNBUNDLED NETWORK ELEMENTS - Louisiana														Attachment: 2		Exhibit: B	
CATEGORY		RATE ELEMENTS	Interim	Zone	BCS	USOC	RATES ($)					Svc Order Submitted Elec per LSR	Svc Order Submitted Manually per LSR	Incremental Charge - Manual Svc Order vs. Electronic-1st	Incremental Charge - Manual Svc Order vs. Electronic-Add'l	Incremental Charge - Manual Svc Order vs. Electronic-Disc 1st	Incremental Charge - Manual Svc Order vs. Electronic-Disc Add'l
							Rec	Nonrecurring		Nonrecurring Disconnect		OSS Rates($)					
								First	Add'l	First	Add'l	SOMEC	SOMAN	SOMAN	SOMAN	SOMAN	SOMAN
		Local Channel - Dedicated - 2-wr Voice Grade - Zone 2					18.32	187.51	32.21				15.20				
		Local Channel - Dedicated - 2-wr Voice Grade - Zone 3					18.32	187.51	32.21				15.20				
		Interoffice Transport - Dedicated - 2-wr Voice Grade Per Mile					0.013										
		Interoffice Transport - Dedicated - 2-wr Voice Grade Per Facility Termination					22.60	39.36	26.62				15.20				
		Local Channel - Dedicated - DS1 - Zone 1					39.18	172.34	149.27				15.20				
		Local Channel - Dedicated - DS1 - Zone 2					121.58	172.34	149.27				15.20				
		Local Channel - Dedicated - DS1 - Zone 3					70.02	172.34	149.27				15.20				
		Interoffice Transport - Dedicated - DS1 Per Mile					0.2652										
		Interoffice Transport - Dedicated - DS1 Per Facility Termination					70.47	86.69	79.44				15.20				
CALLING NAME (CNAM) SERVICE																	
		CNAM For DB Owners - Service Establishment			OQV			22.29					15.20				
		CNAM For Non DB Owners - Service Establishment			OQV			22.29					15.20				
		CNAM For DB Owners - Service Provisioning With Point Code Establishment			OQV			962.22	711.64				15.20				
		CNAM For Non DB Owners - Service Provisioning With Point Code Establishment			OQV			332.43	238.05				15.20				
		CNAM for DB Owners, Per Query			OQV		0.0010217										
		CNAM for Non DB Owners, Per Query			OQV		0.0010217										
LNP Query Service																	
		LNP Charge Per query			OQV		0.0008559										
		LNP Service Establishment Manual						12.16					15.20				
		LNP Service Provisioning with Point Code Establishment						576.33	294.43				15.20				
OPERATOR CALL PROCESSING																	
		Oper. Call Processing - Oper. Provided, Per Min. - Using BST LIDB					1.20										
		Oper. Call Processing - Oper. Provided, Per Min. - Using Foreign LIDB					1.24										
		Oper. Call Processing - Fully Automated, per Call - Using BST LIDB					0.20										
		Oper. Call Processing - Fully Automated, per Call - Using Foreign LIDB					0.20										
INWARD OPERATOR SERVICES																	
		Inward Operator Services - Verification, Per Minute					1.15										
		Inward Operator Services - Verification and Emergency Interrupt - Per Minute					1.15										
BRANDING - OPERATOR CALL PROCESSING																	
	Facility based CLEC																
		Recording of Custom Branded OA Announcement				CBAOS		7,000.00	7,000.00				15.20				
		Loading of Custom Branded OA Announcement per shelf/NAV per OCN				CBAOL		500.00	500.00				15.20				
	UNEP CLEC																
		Recording of Custom Branded OA Announcement						7,000.00	7,000.00				15.20				
		Loading of Custom Branded OA Announcement per shelf/NAV per OCN						500.00	500.00				15.20				
	Unbranding via OLNS for UNEP CLEC																
		Loading of OA per OCN (Regional)						1,200.00	1,200.00				15.20				
DIRECTORY ASSISTANCE SERVICES																	
	DIRECTORY ASSISTANCE ACCESS SERVICE																
		Directory Assistance Access Service Calls, Charge Per Call					0.275										
	DIRECTORY ASSISTANCE CALL COMPLETION ACCESS SERVICE (DACC)																
		Directory Assistance Call Completion Access Service (DACC), Per Call Attempt					0.10										
DIRECTORY ASSISTANCE SERVICES																	
	DIRECTORY ASSISTANCE DATA BASE SERVICE (DADS)																
		Directory Assistance Data Base Service Charge Per Listing					0.04										
		Directory Assistance Data Base Service, per month				DBSOF	150.00										
BRANDING - DIRECTORY ASSISTANCE																	

UNBUNDLED NETWORK ELEMENTS - Louisiana													Attachment: 2		Exhibit: B	
CATEGORY	RATE ELEMENTS	Interim	Zone	BCS	USOC	RATES ($)					Svc Order Submitted Elec per LSR	Svc Order Submitted Manually per LSR	Incremental Charge - Manual Svc Order vs. Electronic-1st	Incremental Charge - Manual Svc Order vs. Electronic-Add'l	Incremental Charge - Manual Svc Order vs. Electronic-Disc 1st	Incremental Charge - Manual Svc Order vs. Electronic-Disc Add'l
						Rec	Nonrecurring		Nonrecurring Disconnect				OSS Rates($)			
							First	Add'l	First	Add'l	SOMEC	SOMAN	SOMAN	SOMAN	SOMAN	SOMAN
Facility Based CLEC																
	Recording and Provisioning of DA Custom Branded Announcement			AMT	CBADA		3,000.00	3,000.00				15.20				
	Loading of Custom Branded Announcement per Switch per OCN			AMT	CBADC		1,170.00	1,170.00				15.20				
UNEP CLEC																
	Recording of DA Custom Branded Announcement						3,000.00	3,000.00				15.20				
	Loading of DA Custom Branded Announcement per Switch per OCN						1,170.00	1,170.00				15.20				
Unbranding via OLNS for UNEP CLEC																
	Loading of DA per OCN (1 OCN per Order)						420.00	420.00				15.20				
	Loading of DA per Switch per OCN						16.00	16.00				15.20				
SELECTIVE ROUTING																
	Selective Routing Per Unique Line Class Code Per Request Per Switch				USRCR		82.25	82.25				15.20				
VIRTUAL COLLOCATION																
	Virtual Collocation-2 Wire Cross Connects (Loop) for Line Splitting			UEPSR, UEPSB	VE1LS	0.0296	11.94	11.46	0.00	0.00		15.20				
PHYSICAL COLLOCATION																
	Physical Collocation-2 Wire Cross Connects (Loop) for Line Splitting			UEPSR, UEPSB	PE1LS	0.0318	11.94	11.46				15.20				
AIN SELECTIVE CARRIER ROUTING																
	Regional Service Establishment			UEBIB	SRCEC		100,209.33					15.20				
	End Office Establishment			UEBIB	SRCEO		164.29	164.29				15.20				
	Query NRC, per query			UEBIB		0.0030293										
AIN - BELLSOUTH AIN SMS ACCESS SERVICE																
	AIN SMS Access Service - Service Establishment, Per State, Initial Setup			A1N	CAMSE		38.30	38.30				15.20				
	AIN SMS Access Service - Port Connection - Dial/Shared Access			A1N	CAMDP		7.60	7.60				15.20				
	AIN SMS Access Service - Port Connection - ISDN Access			A1N	CAM1P		7.60	7.60				15.20				
	AIN SMS Access Service - User Identification Codes - Per User ID Code			A1N	CAMAU		33.99	33.99				15.20				
	AIN SMS Access Service - Security Card, Per User ID Code, Initial or Replacement			A1N	CAMRC		41.39	41.39				15.20				
	AIN SMS Access Service - Storage, Per Unit (100 Kilobytes)					0.0022										
	AIN SMS Access Service - Session, Per Minute					0.5795										
	AIN SMS Access Service - Company Performed Session, Per Minute					0.8104										
AIN - BELLSOUTH AIN TOOLKIT SERVICE																
	AIN Toolkit Service - Service Establishment Charge, Per State, Initial Setup			CAM	BAPSC		38.30	38.30				15.20				
	AIN Toolkit Service - Training Session, Per Customer				BAPVX		4,175.10	4,175.10				15.20				
	AIN Toolkit Service - Trigger Access Charge, Per Trigger, Per DN, Term. Attempt				BAPTT		7.60	7.60				15.20				
	AIN Toolkit Service - Trigger Access Charge, Per Trigger, Per DN, Off-Hook Delay				BAPTD		7.60	7.60				15.20				
	AIN Toolkit Service - Trigger Access Charge, Per Trigger, Per DN, Off-Hook Immediate				BAPTM		7.60	7.60				15.20				
	AIN Toolkit Service - Trigger Access Charge, Per Trigger, Per DN, 10-Digit PODP				BAPTO		33.47	33.47				15.20				
	AIN Toolkit Service - Trigger Access Charge, Per Trigger, Per DN, CDP				BAPTC		33.47	33.47				15.20				
	AIN Toolkit Service - Trigger Access Charge, Per Trigger, Per DN, Feature Code				BAPTF		33.47	33.47				15.20				
	AIN Toolkit Service - Query Charge, Per Query					0.0536446										
	AIN Toolkit Service - Type 1 Node Charge, Per AIN Toolkit Subscription, Per Node, Per Query					0.006569										

CATEGORY		RATE ELEMENTS	Interim	Zone	BCS	USOC	RATES ($)					Svc Order Submitted Elec per LSR	Svc Order Submitted Manually per LSR	Attachment: 2 Incremental Charge - Manual Svc Order vs. Electronic- 1st	Attachment: 2 Incremental Charge - Manual Svc Order vs. Electronic- Add'l	Exhibit: B Incremental Charge - Manual Svc Order vs. Electronic- Disc 1st	Exhibit: B Incremental Charge - Manual Svc Order vs. Electronic- Disc Add'l
							Rec	Nonrecurring		Nonrecurring Disconnect		OSS Rates($)					
								First	Add'l	First	Add'l	SOMEC	SOMAN	SOMAN	SOMAN	SOMAN	SOMAN
		AIN Toolkit Service - SCP Storage Charge, Per SMS Access Account, Per 100 Kilobytes					0.06										
		AIN Toolkit Service - Monthly report - Per AIN Toolkit Service Subscription			CAM	BAPMS	10.90	7.60	7.60				15.20				
		AIN Toolkit Service - Special Study - Per AIN Toolkit Service Subscription			CAM	BAPLS	2.80	8.41	8.41				15.20				
		AIN Toolkit Service - Call Event Report - Per AIN Toolkit Service Subscription			CAM	BAPDS	8.20	7.60	7.60				15.20				
		AIN Toolkit Service - Call Event Special Study - Per AIN Toolkit Service Subscription			CAM	BAPES	0.09	8.41	8.41				15.20				
ENHANCED EXTENDED LINK (EELs)																	
	NOTE: The monthly recurring and non-recurring charges below will apply and the Switch-As-Is Charge will not apply for EELs provisioned as ' Ordinarily Combined' Network Elements.																
	NOTE: The monthly recurring and the Switch-As-Is Charge and not the non-recurring charges below will apply for EELs provisioned as ' Currently Combined' Network Elements.																
	NOTE: Minimum billing is one month for DS1 and below and three months above DS1 services.																
	2-WIRE VOICE GRADE EXTENDED LOOP WITH DEDICATED DS1 INTEROFFICE TRANSPORT (EEL)																
		First 2-Wire VG Loop(SL2) in a DS1 Interofficed Transport Combination - Zone 1		1	UNCVX	UEAL2	14.93	94.21	45.09				15.20				
		First 2-Wire VG Grade Loop(SL2) in a DS1 Interofficed Transport Combination - Zone 2		2	UNCVX	UEAL2	25.35	94.21	45.09				15.20				
		First 2-Wire VG Grade Loop(SL2) in a DS1 Interofficed Transport Combination - Zone 3		3	UNCVX	UEAL2	50.46	94.21	45.09				15.20				
		Interoffice Transport - Dedicated - DS1 combination - Per Mile per month			UNC1X	1L5XX	0.2652										
		Interoffice Transport - Dedicated - DS1 combination - Facility Termination per month			UNC1X	U1TF1	70.47	143.58	103.88				15.20				
		DS1 Channelization System Per Month			UNC1X	MQ1	105.09	59.97	12.96				15.20				
		Voice Grade COCI - DS1 To Ds0 Interface - Per Month			UNCVX	1D1VG	0.6497	5.91	4.26								
		Each Additional 2-Wire VG Loop(SL 2) in the same DS1 Interoffice Transport Combination - Zone 1		1	UNCVX	UEAL2	14.93	94.21	45.09				15.20				
		Each Additional 2-Wire VG Loop(SL2) in the same DS1 Interoffice Transport Combination - Zone 2		2	UNCVX	UEAL2	25.35	94.21	45.09				15.20				
		Each Additional 2-Wire VG Loop(SL2) in the same DS1 Interoffice Transport Combination - Zone 3		3	UNCVX	UEAL2	50.46	94.21	45.09				15.20				
		Voice Grade COCI - DS1 to DS0 Channel System combination - per month			UNCVX	1D1VG	0.6497	5.91	4.26								
		Nonrecurring Currently Combined Network Elements Switch -As-Is Charge			UNC1X	UNCCC		5.43	5.43				15.20				
	4-WIRE VOICE GRADE EXTENDED LOOP WITH DEDICATED DS1 INTEROFFICE TRANSPORT (EEL)																
		First 4-Wire Analog Voice Grade Loop in a DS1 Interoffice Transport Combination - Zone 1		1	UNCVX	UEAL4	30.81	94.21	45.09				15.20				
		First 4-Wire Analog Voice Grade Loop in a DS1 Interoffice Transport Combination - Zone 2		2	UNCVX	UEAL4	38.32	94.21	45.09				15.20				
		First 4-Wire Analog Voice Grade Loop in a DS1 Interoffice Transport Combination - Zone 3		3	UNCVX	UEAL4	60.39	94.21	45.09				15.20				
		Interoffice Transport - Dedicated - DS1 combination - Per Mile Per Month			UNC1X	1L5XX	0.2652										
		Interoffice Transport - Dedicated - DS1 - Facility Termination Per Month			UNC1X	U1TF1	70.47	143.58	103.88				15.20				
		Channelization - Channel System DS1 to DS0 combination Per Month			UNC1X	MQ1	105.09	59.97	12.96								
		Voice Grade COCI - DS1 to DS0 Channel System combination - per month			UNCVX	1D1VG	0.6497	5.91	4.26								
		Additional 4-Wire Analog Voice Grade Loop in same DS1 Interoffice Transport Combination - Zone 1		1	UNCVX	UEAL4	30.81	94.21	45.09				15.20				
		Additional 4-Wire Analog Voice Grade Loop in same DS1 Interoffice Transport Combination - Zone 2		2	UNCVX	UEAL4	38.32	94.21	45.09				15.20				
		Additional 4-Wire Analog Voice Grade Loop in same DS1 Interoffice Transport Combination - Zone 3		3	UNCVX	UEAL4	60.39	94.21	45.09				15.20				

CATEGORY		RATE ELEMENTS	Interim	Zone	BCS	USOC	RATES ($)					Svc Order Submitted Elec per LSR	Svc Order Submitted Manually per LSR	Attachment: 2 Incremental Charge - Manual Svc Order vs. Electronic-1st	Attachment: 2 Incremental Charge - Manual Svc Order vs. Electronic-Add'l	Exhibit: B Incremental Charge - Manual Svc Order vs. Electronic-Disc 1st	Exhibit: B Incremental Charge - Manual Svc Order vs. Electronic-Disc Add'l
							Rec	Nonrecurring		Nonrecurring Disconnect		OSS Rates($)					
								First	Add'l	First	Add'l	SOMEC	SOMAN	SOMAN	SOMAN	SOMAN	SOMAN
		Voice Grade COCI - DS1 to DS0 Channel System combination - per month			UNCVX	1D1VG	0.6497	5.91	4.26								
		Nonrecurring Currently Combined Network Elements Switch -As-Is Charge			UNC1X	UNCCC		5.43	5.43				15.20				
	4-WIRE 56 KBPS EXTENDED DIGITAL LOOP WITH DEDICATED DS1 INTEROFFICE TRANSPORT (EEL)																
		First 4-Wire 56Kbps Digital Grade Loop in a DS1 Interoffice Transport Combination - Zone 1		1	UNCDX	UDL56	30.99	94.21	45.09				15.20				
		First 4-wire 56Kbps Digital Grade Loop in a DS1 Interoffice Transport Combination - Zone 2		2	UNCDX	UDL56	36.78	94.21	45.09				15.20				
		First 4-Wire 56Kbps Digital Grade Loop in a DS1 Interoffice Transport Combination - Zone 3		3	UNCDX	UDL56	38.92	94.21	45.09				15.20				
		Interoffice Transport - Dedicated - DS1 combination - Per Mile Per Month			UNC1X	1L5XX	0.2652										
		Interoffice Transport - Dedicated - DS1 - combination Facility Termination Per Month			UNC1X	U1TF1	70.47	143.58	103.88				15.20				
		Channelization - Channel System DS1 to DS0 combination Per Month			UNC1X	MQ1	105.09	59.97	12.96								
		OCU-DP COCI (data) - DS1 to DS0 Channel System - per month (2.4-64kbs)			UNCDX	1D1DD	1.38	5.91	4.26								
		Additional 4-Wire 56Kbps Digital Grade Loopin same DS1 Interoffice Transport Combination - Zone 1		1	UNCDX	UDL56	30.99	94.21	45.09				15.20				
		Additional 4-Wire 56Kbps Digital Grade Loopin same DS1 Interoffice Transport Combination - Zone 2		2	UNCDX	UDL56	36.78	94.21	45.09				15.20				
		Additional 4-Wire 56Kbps Digital Grade Loopin same DS1 Interoffice Transport Combination - Zone 3		3	UNCDX	UDL56	38.92	94.21	45.09				15.20				
		OCU-DP COCI (data) - DS1 to DS0 Channel System - combination per month (2.4-64kbs)			UNCDX	1D1DD	1.38	5.91	4.26								
		Nonrecurring Currently Combined Network Elements Switch -As-Is Charge			UNC1X	UNCCC		5.43	5.43				15.20				
	4-WIRE 64 KBPS EXTENDED DIGITAL LOOP WITH DEDICATED DS1 INTEROFFICE TRANSPORT (EEL)																
		First 4-Wire 64Kbps Digital Grade Loop in a DS1 Interoffice Transport Combination - Zone 1		1	UNCDX	UDL64	30.99	94.21	45.09				15.20				
		First 4-Wire 64Kbps Digital Grade Loop in a DS1 Interoffice Transport Combination - Zone 2		2	UNCDX	UDL64	36.78	94.21	45.09				15.20				
		First 4-Wire 64Kbps Digital Grade Loop in a DS1 Interoffice Transport Combination - Zone 3		3	UNCDX	UDL64	38.92	94.21	45.09				15.20				
		Interoffice Transport - Dedicated - DS1 combination - Per Mile Per Month			UNC1X	1L5XX	0.2652										
		Interoffice Transport - Dedicated - DS1 combination - Facility Termination Per Month			UNC1X	U1TF1	70.47	143.58	103.88				15.20				
		Channelization - Channel System DS1 to DS0 combination Per Month			UNC1X	MQ1	105.09	59.97	12.96								
		OCU-DP COCI (data) - DS1 to DS0 Channel System combination - per month (2.4-64kbs)			UNCDX	1D1DD	1.38	5.91	4.26								
		Additional 4-Wire 64Kbps Digital Grade Loopin same DS1 Interoffice Transport Combination - Zone 1		1	UNCDX	UDL64	30.99	94.21	45.09				15.20				
		Additional 4-Wire 64Kbps Digital Grade Loopin same DS1 Interoffice Transport Combination - Zone 2		2	UNCDX	UDL64	36.78	94.21	45.09				15.20				
		Additional 4-Wire 64Kbps Digital Grade Loopin same DS1 Interoffice Transport Combination - Zone 3		3	UNCDX	UDL64	38.92	94.21	45.09				15.20				
		OCU-DP COCI (data) - DS1 to DS0 Channel System combination - per month (2.4-64kbs)			UNCDX	1D1DD	1.38	5.91	4.26								
		Nonrecurring Currently Combined Network Elements Switch -As-Is Charge			UNC1X	UNCCC		5.43	5.43				15.20				
	4-WIRE DS1 DIGITAL EXTENDED LOOP WITH DEDICATED DS1 INTEROFFICE TRANSPORT (EEL)																
		4-Wire DS1 Digital Loop in Combination with DS1 Interoffice Transport - Zone 1		1	UNC1X	USLXX	85.70	169.22	100.89				15.20				
		4-Wire DS1 Digital Loop in Combination with DS1 Interoffice Transport - Zone 2		2	UNC1X	USLXX	194.96	169.22	100.89				15.20				

UNBUNDLED NETWORK ELEMENTS - Louisiana														Attachment: 2		Exhibit: B	
CATEGORY		RATE ELEMENTS	Interim	Zone	BCS	USOC	RATES ($)					Svc Order Submitted Elec per LSR	Svc Order Submitted Manually per LSR	Incremental Charge - Manual Svc Order vs. Electronic-1st	Incremental Charge - Manual Svc Order vs. Electronic-Add'l	Incremental Charge - Manual Svc Order vs. Electronic-Disc 1st	Incremental Charge - Manual Svc Order vs. Electronic-Disc Add'l
							Rec	Nonrecurring		Nonrecurring Disconnect		OSS Rates($)					
								First	Add'l	First	Add'l	SOMEC	SOMAN	SOMAN	SOMAN	SOMAN	SOMAN
		4-Wire DS1 Digital Loop in Combination with DS1 Interoffice Transport - Zone 3		3	UNC1X	USLXX	491.94	169.22	100.89				15.20				
		Interoffice Transport - Dedicated - DS1 combination - Per Mile Per Month			UNC1X	1L5XX	0.2652										
		Interoffice Transport - Dedicated - DS1 combination - Facility Termination Per Month			UNC1X	U1TF1	70.47	143.58	103.88				15.20				
		Nonrecurring Currently Combined Network Elements Switch -As-Is Charge			UNC1X	UNCCC		5.43	5.43				15.20				
	4-WIRE DS1 DIGITAL EXTENDED LOOP WITH DEDICATED DS3 INTEROFFICE TRANSPORT (EEL)																
		First DS1Loop in DS3 Interoffice Transport Combination - Zone 1		1	UNC1X	USLXX	85.70	169.22	100.89				15.20				
		First DS1Loop in DS3 Interoffice Transport Combination - Zone 2		2	UNC1X	USLXX	194.96	169.22	100.89				15.20				
		First DS1Loop in DS3 Interoffice Transport Combination - Zone 3		3	UNC1X	USLXX	491.94	169.22	100.89				15.20				
		Interoffice Transport - Dedicated - DS3 combination - Per Mile Per Month			UNC3X	1L5XX	6.04										
		Interoffice Transport - Dedicated - DS3 - Facility Termination per month			UNC3X	U1TF3	850.45	296.68	121.16				15.20				
		DS3 to DS1 Channel System combination per month			UNC3X	MQ3	201.48	107.05	48.07								
		DS3 Interface Unit (DS1 COCI) combination per month			UNC1X	UC1D1	11.78	5.91	4.26								
		Additional DS1Loop in DS3 Interoffice Transport Combination - Zone 1		1	UNC1X	USLXX	85.70	169.22	100.89				15.20				
		Additional DS1Loop in DS3 Interoffice Transport Combination - Zone 2		2	UNC1X	USLXX	194.96	169.22	100.89				15.20				
		Additional DS1Loop in DS3 Interoffice Transport Combination - Zone 3		3	UNC1X	USLXX	491.94	169.22	100.89				15.20				
		DS3 Interface Unit (DS1 COCI) combination per month			UNC1X	UC1D1	11.78	5.91	4.26								
		Nonrecurring Currently Combined Network Elements Switch -As-Is Charge			UNC3X	UNCCC		5.43	5.43				15.20				
	2-WIRE VOICE GRADE EXTENDED LOOP/ 2 WIRE VOICE GRADE INTEROFFICE TRANSPORT (EEL)																
		2-WireVG Loop used with 2-wire VG Interoffice Transport Combination - Zone 1		1	UNCVX	UEAL2	14.93	94.21	45.09				15.20				
		2-WireVG Loop used with 2-wire VG Interoffice Transport Combination - Zone 2		2	UNCVX	UEAL2	25.35	94.21	45.09				15.20				
		2-WireVG Loop used with 2-wire VG Interoffice Transport Combination - Zone 3		3	UNCVX	UEAL2	50.46	94.21	45.09				15.20				
		Interoffice Transport - Dedicated - 2-wire VG combination - Per Mile Per Month			UNCVX	1L5XX	0.013										
		Interoffice Transport - Dedicated - 2- Wire Voice Grade combination - Facility Termination per month			UNCVX	U1TV2	22.60	72.60	41.75				15.20				
		Nonrecurring Currently Combined Network Elements Switch -As-Is Charge			UNCVX	UNCCC		5.43	5.43				15.20				
	4-WIRE VOICE GRADE EXTENDED LOOP/ 4 WIRE VOICE GRADE INTEROFFICE TRANSPORT (EEL)																
		4-WireVG Loop used with 4-wire VG Interoffice Transport Combination - Zone 1		1	UNCVX	UEAL4	30.81	94.21	45.09				15.20				
		4-WireVG Loop used with 4-wire VG Interoffice Transport Combination - Zone 2		2	UNCVX	UEAL4	38.32	94.21	45.09				15.20				
		4-WireVG Loop used with 4-wire VG Interoffice Transport Combination - Zone 3		3	UNCVX	UEAL4	60.39	94.21	45.09				15.20				
		Interoffice Transport - Dedicated - 4-wire VG combination - Per Mile Per Month			UNCVX	1L5XX	0.013										
		Interoffice Transport - Dedicated - 4- Wire Voice Grade combination - Facility Termination per month			UNCVX	U1TV4	19.81	72.60	41.75				15.20				
		Nonrecurring Currently Combined Network Elements Switch -As-Is Charge			UNCVX	UNCCC		5.43	5.43				15.20				
	DS3 DIGITAL EXTENDED LOOP WITH DEDICATED DS3 INTEROFFICE TRANSPORT (EEL)																
		High Capacity Unbundled Local Loop - DS3 combination - Per Mile per month			UNC3X	1L5ND	10.04										

CATEGORY		RATE ELEMENTS	Interim	Zone	BCS	USOC	RATES ($)					Svc Order Submitted Elec per LSR	Svc Order Submitted Manually per LSR	Attachment: 2 Incremental Charge - Manual Svc Order vs. Electronic-1st	Attachment: 2 Incremental Charge - Manual Svc Order vs. Electronic-Add'l	Exhibit: B Incremental Charge - Manual Svc Order vs. Electronic-Disc 1st	Exhibit: B Incremental Charge - Manual Svc Order vs. Electronic-Disc Add'l
							Rec	Nonrecurring		Nonrecurring Disconnect		OSS Rates($)					
								First	Add'l	First	Add'l	SOMEC	SOMAN	SOMAN	SOMAN	SOMAN	SOMAN
		High Capacity Unbundled Local Loop - DS3 combination - Facility Termination per month			UNC3X	UE3PX	362.34	188.45	125.51								
		Interoffice Transport - Dedicated - DS3 - Per Mile per month			UNC3X	1L5XX	6.04										
		Interoffice Transport - Dedicated - DS3 combination - Facility Termination per per month			UNC3X	U1TF3	850.45	296.68	121.16				15.20				
		Nonrecurring Currently Combined Network Elements Switch -As-Is Charge			UNC3X	UNCCC		5.43	5.43				15.20				
	STS1 DIGITAL EXTENDED LOOP WITH DEDICATED STS1 INTEROFFICE TRANSPORT (EEL)																
		High Capacity Unbundled Local Loop - STS1 combination - Per Mile per month			UNCSX	1L5ND	10.04										
		High Capacity Unbundled Local Loop - STS1 combination - Facility Termination per month			UNCSX	UDLS1	374.56	188.45	125.51								
		Interoffice Transport - Dedicated - STS1 combination - Per Mile per month			UNCSX	1L5XX	6.04										
		Interoffice Transport - Dedicated - STS1 combination - Facility Termination per month			UNCSX	U1TFS	830.19	296.68	121.16				15.20				
		Nonrecurring Currently Combined Network Elements Switch -As-Is Charge			UNCSX	UNCCC		5.43	5.43				15.20				
	2-WIRE ISDN EXTENDED LOOP WITH DS1 INTEROFFICE TRANSPORT (EEL)																
		First 2-Wire ISDN Loop in a DS1 Interoffice Combination Transport - Zone 1		1	UNCNX	U1L2X	22.09	94.21	45.09				15.20				
		First 2-Wire ISDN Loop in a DS1 Interoffice Combination Transport - Zone 2		2	UNCNX	U1L2X	35.28	94.21	45.09				15.20				
		First 2-Wire ISDN Loop in a DS1 Interoffice Combination Transport - Zone 3		3	UNCNX	U1L2X	65.18	94.21	45.09				15.20				
		Interoffice Transport - Dedicated - DS1 combination - Per Mile			UNC1X	1L5XX	0.2652										
		Interoffice Transport - Dedicated - DS1 combintion - Facility Termination per month			UNC1X	U1TF1	70.47	143.58	103.88				15.20				
		Channelization - Channel System DS1 to DS0 combination - per month			UNC1X	MQ1	105.09	59.97	12.96								
		2-wire ISDN COCI (BRITE) - DS1 to DS0 Channel System combination - per month			UNCNX	UC1CA	2.96	5.91	4.26								
		Additional 2-wire ISDN Loop in same DS1Interoffice Transport Combination - Zone 1		1	UNCNX	U1L2X	22.09	94.21	45.09				15.20				
		Additional 2-wire ISDN Loop in same DS1Interoffice Transport Combination - Zone 2		2	UNCNX	U1L2X	35.28	94.21	45.09				15.20				
		Additional 2-wire ISDN Loop in same DS1Interoffice Transport Combination - Zone 3		3	UNCNX	U1L2X	65.18	94.21	45.09				15.20				
		2-wire ISDN COCI (BRITE) - DS1 to DS0 Channel System combintaion- per month			UNCNX	UC1CA	2.96	5.91	4.26								
		Nonrecurring Currently Combined Network Elements Switch -As-Is Charge			UNC1X	UNCCC		5.43	5.43				15.20				
	4-WIRE DS1 DIGITAL EXTENDED LOOP WITH DEDICATED STS-1 INTEROFFICE TRANSPORT (EEL)																
		First DS1 Loop in STS1 Interoffice Transport Combination - Zone 1		1	UNC1X	USLXX	85.70	169.22	100.89				15.20				
		First DS1 Loop in STS1 Interoffice Transport Combination - Zone 2		2	UNC1X	USLXX	194.96	169.22	100.89				15.20				
		First DS1 Loop in STS1 Interoffice Transport Combination - Zone 3		3	UNC1X	USLXX	491.94	169.22	100.89				15.20				
		Interoffice Transport - Dedicated - STS1 combination - Per Mile Per Month			UNCSX	1L5XX	6.04										
		Interoffice Transport - Dedicated - STS1 combination - Facility Termination			UNCSX	U1TFS	830.19	296.68	121.16				15.20				
		STS1 to DS1 Channel System conbination per month			UNCSX	MQ3	201.48	107.05	48.07								
		DS3 Interface Unit (DS1 COCI) combination per month			UNC1X	UC1D1	11.78	5.91	4.26								
		Additional DS1Loop in STS1 Interoffice Transport Combination - Zone 1		1	UNC1X	USLXX	85.70	169.22	100.89				15.20				
		Additional DS1Loop in STS1 Interoffice Transport Combination - Zone 2		2	UNC1X	USLXX	194.96	169.22	100.89				15.20				

CATEGORY	RATE ELEMENTS	Interim	Zone	BCS	USOC	RATES ($) Rec	Nonrecurring First	Nonrecurring Add'l	Nonrecurring Disconnect First	Nonrecurring Disconnect Add'l	Svc Order Submitted Elec per LSR	Svc Order Submitted Manually per LSR	Attachment: 2 Incremental Charge - Manual Svc Order vs. Electronic-1st	Attachment: 2 Incremental Charge - Manual Svc Order vs. Electronic-Add'l	Exhibit: B Incremental Charge - Manual Svc Order vs. Electronic-Disc 1st	Exhibit: B Incremental Charge - Manual Svc Order vs. Electronic-Disc Add'l
											OSS Rates($)					
											SOMEC	SOMAN	SOMAN	SOMAN	SOMAN	SOMAN
	Additional DS1Loop in STS1 Interoffice Transport Combination - Zone 3		3	UNC1X	USLXX	491.94	169.22	100.89				15.20				
	DS3 Interface Unit (DS1 COCI) combination per month			UNC1X	UC1D1	11.78	5.91	4.26								
	Nonrecurring Currently Combined Network Elements Switch -As-Is Charge			UNCSX	UNCCC		5.43	5.43				15.20				
4-WIRE 56 KBPS DIGITAL EXTENDED LOOP WITH 56 KBPS INTEROFFICE TRANSPORT (EEL)																
	4-wire 56 kbps Loop/4-wire 56 kbps Interoffice Transport Combination - Zone 1		1	UNCDX	UDL56	30.99	94.21	45.09				15.20				
	4-wire 56 kbps Loop/4-wire 56 kbps Interoffice Transport Combination - Zone 2		2	UNCDX	UDL56	36.78	94.21	45.09				15.20				
	4-wire 56 kbps Loop/4-wire 56 kbps Interoffice Transport Combination - Zone 3		3	UNCDX	UDL56	38.92	94.21	45.09				15.20				
	Interoffice Transport - Dedicated - 4-wire 56 kbps combination - Per Mile			UNCDX	1L5XX	0.013										
	Interoffice Transport - Dedicated - 4-wire 56 kbps combination - Facility Termination			UNCDX	U1TD5	15.61	72.60	41.75				15.20				
	Nonrecurring Currently Combined Network Elements Switch -As-Is Charge			UNCDX	UNCCC		5.43	5.43				15.20				
4-WIRE 64 KBPS DIGITAL EXTENDED LOOP WITH 64 KBPS INTEROFFICE TRANSPORT (EEL)																
	4-wire 64 kbps Loop/4-wire 64 kbps Interoffice Transport Combination - Zone 1		1	UNCDX	UDL64	30.99	94.21	45.09				15.20				
	4-wire 64 kbps Loop/4-wire 64 kbps Interoffice Transport Combination - Zone 2		2	UNCDX	UDL64	36.78	94.21	45.09				15.20				
	4-wire 64 kbps Loop/4-wire 64 kbps Interoffice Transport Combination - Zone 3		3	UNCDX	UDL64	38.92	94.21	45.09				15.20				
	Interoffice Transport - Dedicated - 4-wire 64 kbps combination - Per Mile			UNCDX	1L5XX	0.013										
	Interoffice Transport - Dedicated - 4-wire 64 kbps combination - Facility Termination			UNCDX	U1TD6	15.61	72.60	41.75				15.20				
	Nonrecurring Currently Combined Network Elements Switch -As-Is Charge			UNCDX	UNCCC		5.43	5.43				15.20				
ADDITIONAL NETWORK ELEMENTS																
	When used as a part of a currently combined facility, the non-recurrng charges do not apply, but a Switch As Is charge does apply.															
	When used as ordinarily combined network elements in All States, the non-recurring charges apply and the Switch As Is Charge does not.															
	Nonrecurring Currently Combined Network Elements "Switch As Is" Charge (One applies to each combination)															
	Nonrecurring Currently Combined Network Elements Switch -As-Is Charge - 2 wire/4-Wire VG			UNCVX	UNCCC		5.43	5.43				15.20				
	Nonrecurring Currently Combined Network Elements Switch -As-Is Charge - 56/64 kbps			UNCDX	UNCCC		5.43	5.43				15.20				
	Nonrecurring Currently Combined Network Elements Switch -As-Is Charge - DS1			UNC1X	UNCCC		5.43	5.43				15.20				
	Nonrecurring Currently Combined Network Elements Switch -As-Is Charge - DS3			UNC3X	UNCCC		5.43	5.43				15.20				
	Nonrecurring Currently Combined Network Elements Switch -As-Is Charge - STS1			UNCSX	UNCCC		5.43	5.43				15.20				
	NOTE: Local Channel - Dedicated Transport - minimum billing period - Below DS3=one month, DS3 and above=four months															
	Local Channel - Dedicated - 2-Wire Voice Grade			UNCVX	ULDV2	18.32	187.51	32.21								
	Local Channel - Dedicated - 4-Wire Voice Grade			UNCVX	ULDV4	19.41	187.94	32.63								
	Local Channel - Dedicated - DS1 per month Zone 1		1	UNC1X	ULDF1	39.18	172.34	149.27				15.20				
	Local Channel - Dedicated -DS1 Per Month Zone 2		2	UNC1X	ULDF1	121.58	172.34	149.27				15.20				
	Local Channel - Dedicated - DS1- Per Month Zone 3		3	UNC1X	ULDF1	70.02	172.34	149.27				15.20				
	Local Channel - Dedicated - DS3 - Per Mile per month			UNC3X	1L5NC	7.82										
	Local Channel - Dedicated - DS3 - Facility Termination			UNC3X	ULDF3	469.44	438.46	256.30				15.20				
	Local Channel - Dedicated - STS-1- Per Mile per month			UNCSX	1L5NC	7.82										
	Local Channel - Dedicated - STS-1 - Facility Termination			UNCSX	ULDFS	457.22	438.46	256.30								
	Optional Features & Functions:															
	Clear Channel Capability (SF/ESF) Option - Subsequent Activity - per DS1	I		ULDD1, U1TD1, UNC1X, USL	NRCCC		65.05					15.20				

CATEGORY	RATE ELEMENTS	Interim	Zone	BCS	USOC	RATES ($)					Svc Order Submitted Elec per LSR	Svc Order Submitted Manually per LSR	Incremental Charge - Manual Svc Order vs. Electronic-1st	Incremental Charge - Manual Svc Order vs. Electronic-Add'l	Incremental Charge - Manual Svc Order vs. Electronic-Disc 1st	Incremental Charge - Manual Svc Order vs. Electronic-Disc Add'l
						Rec	Nonrecurring		Nonrecurring Disconnect		OSS Rates($)					
							First	Add'l	First	Add'l	SOMEC	SOMAN	SOMAN	SOMAN	SOMAN	SOMAN
	C-bit Parity Option - Subsequent Activity - per DS3	i		U1TD3, ULDD3, UE3, UNC3X	NRCC3		50.05					15.20				
MULTIPLEXERS																
NOTE: minimum billing period is one month for DS1 to DS0 Channel System and interfaces																
NOTE: minimum billing period is three months for DS3 to DS1 Channel System and interfaces																
	DS1 to DS0 Channel System (with the higher-level connected to a collocation in the same SWC) per month			UXTD1	MQ1	105.09	88.41	60.76				15.20				
	DS1 to DS0 Channel System (used to channelize a DS1 Local Channel) per month			ULDD1	MQ1	105.09	88.41	60.76				15.20				
	DS1 to DS0 Channel System (used to channelize a DS1 Interoffice Channel) per month			U1TD1	MQ1	105.09	88.41	60.76				15.20				
	OCU-DP COCI (data) - DS1 to DS0 Channel System - per month (2.4-64kbs) used for a Local Loop			UDL	1D1DD	1.38	6.39	4.58				15.20				
	OCU-DP COCI (data) - DS1 to DS0 Channel System - per month (2.4-64kbs) used for connection to a channelized DS1 Local Channel in the same SWC as collocation			U1TUD	1D1DD	1.38	6.39	4.58				15.20				
	2-wire ISDN COCI (BRITE) - DS1 to DS0 Channel Systsem - per month for a Local Loop			UDN	UC1CA	2.96	6.39	4.58				15.20				
	2-wire ISDN COCI (BRITE) - DS1 to DS0 Channel Systsem - per month used for connection to a channelized DS1 Local Channel in the same SWC as collocation			U1TUB	UC1CA	2.96	6.39	4.58				15.20				
	Voice Grade COCI - DS1 to DS0 Channel System - per month used for a Local Loop			UEA	1D1VG	0.6497	6.39	4.58				15.20				
	Voice Grade COCI - DS1 to DS0 Channel System - per month used for connection to a channelized DS1 Local Channel in the same SWC as collocation			U1TUC	1D1VG	0.6497	6.39	4.58				15.20				
	DS3 to DS1 Channel System (with the higher level connected to a collocation in the same SWC) per month			UXTD3	MQ3	201.48	172.99	91.25				15.20				
	DS3 to DS1 Channel System (used to channelize a DS3 Local Channel) per month			ULDD3	MQ3	201.48	172.99	91.25				15.20				
	DS3 to DS1 Channel System (used to channelize a DS3 Interoffice Channel per month			U1TD3	MQ3											
	STS-1 to DS1 Channel System (with the higher level connected to a collocation in the same SWC) per month			UXTS1	MQ3	201.48	172.99	91.25				15.20				
	STS-1 to DS1 Channel System (used to channelize a STS-1 Local Channel) per month			ULDS1	MQ3	201.48	172.99	91.25				15.20				
	STS-1 to DS1 Channel System (used to channelize a STS-1 Interoffice Channel) per month			U1TS1	MQ3	201.48	172.99	91.25				15.20				
	DS1 COCI used with Loop per month			USL	UC1D1	11.78	6.39	4.58								
	DS1 COCI (used for connection to a channelized DS1 Local Channel in the same SWC as collocation) per month			U1TUA	UC1D1	11.78	6.39	4.58								
	DS1 COCI used with Interoffice Channel per month			U1TD1	UC1D1	11.78	6.39	4.58								
Sub-Loop Feeder																
	Unbundled Sub-Loop Feeder Loop, 4-Wire DS1 - Zone 1		1	UNC1X	USBFG	55.38	98.15	61.77								
	Unbundled Sub-Loop Feeder Loop, 4-Wire DS1 - Zone 2		2	UNC1X	USBFG	167.83	98.15	61.77								
	Unbundled Sub-Loop Feeder Loop, 4-Wire DS1 - Zone 3		3	UNC1X	USBFG	469.87	98.15	61.77								
UNBUNDLED LOCAL EXCHANGE SWITCHING(PORTS)																
Exchange Ports																
NOTE: Although the Port Rate includes all available features in GA, KY, LA & TN, the desired features will need to be ordered using retail USOCs																
2-WIRE VOICE GRADE LINE PORT RATES (RES)																
	Exchange Ports - 2-Wire Analog Line Port- Res.			UEPSR	UEPRL	1.52	2.31	2.21				15.20				
	Exchange Ports - 2-Wire Analog Line Port with Caller ID - Res.			UEPSR	UEPRC	1.52	2.31	2.21				15.20				
	Exchange Ports - 2-Wire Analog Line Port outgoing only - Res.			UEPSR	UEPRO	1.52	2.31	2.21				15.20				
	Exchange Ports - 2-Wire VG unbundled LA extended local dialing parity Port with Caller ID - Res.			UEPSR	UEPAS	1.52	2.31	2.21				15.20				
	Exchange Ports - 2-Wire VG unbundled Louisiana Area Plus with Caller ID - Res (RUL)			UEPSR	UEPAG	1.52	2.31	2.21				15.20				

UNBUNDLED NETWORK ELEMENTS - Louisiana														Attachment: 2		Exhibit: B	
CATEGORY		RATE ELEMENTS	Interim	Zone	BCS	USOC	RATES ($)					Svc Order Submitted Elec per LSR	Svc Order Submitted Manually per LSR	Incremental Charge - Manual Svc Order vs. Electronic-1st	Incremental Charge - Manual Svc Order vs. Electronic-Add'l	Incremental Charge - Manual Svc Order vs. Electronic-Disc 1st	Incremental Charge - Manual Svc Order vs. Electronic-Disc Add'l
							Rec	Nonrecurring		Nonrecurring Disconnect		OSS Rates($)					
								First	Add'l	First	Add'l	SOMEC	SOMAN	SOMAN	SOMAN	SOMAN	SOMAN
		Exchange Ports - 2-Wire VG unbundled res, low usage line port with Caller ID (LUM)			UEPSR	UEPAP	1.52	2.31	2.21				15.20				
		Exchange Ports - 2-Wire VG Louisiana Residence Dialing Plan without Caller ID			UEPSR	UEPWG	1.52	2.31	2.21				15.20				
		Exchange Ports - 2-Wire VG Louisiana Residence Area Plus without Caller ID			UEPSR	UEPRQ	1.52	2.31	2.21				15.20				
		2-Wire voice unbundled Low Usage Line Port without Caller ID Capability			UEPSR	UEPRT	1.52	2.31	2.21				15.20				
		Subsequent Activity			UEPSR	USASC	0.00	0.00	0.00				15.20				
	FEATURES																
		All Available Vertical Features			UEPSR	UEPVF	0.00	0.00	0.00				15.20				
	2-WIRE VOICE GRADE LINE PORT RATES (BUS)																
		Exchange Ports - 2-Wire Analog Line Port without Caller ID - Bus			UEPSB	UEPBL	1.52	2.31	2.21				15.20				
		Exchange Ports - 2-Wire VG unbundled Line Port with unbundled port with Caller+E484 ID - Bus.			UEPSB	UEPBC	1.52	2.31	2.21				15.20				
		Exchange Ports - 2-Wire Analog Line Port outgoing only - Bus.			UEPSB	UEPBO	1.52	2.31	2.21				15.20				
		Exchange Ports - 2-Wire VG unbundled LA extended local dialing parity Port with Caller ID - Bus.			UEPSB	UEPAX	1.52	2.31	2.21				15.20				
		Exhange Ports - 2-Wire VG unbundled incoming only port with Caller ID - Bus			UEPSB	UEPB1	1.52	2.31	2.21				15.20				
		Exchange Ports - 2-Wire VG unbundled Louisiana Bus Area Calling Port with Caller ID - Bus (BUC)			UEPSB	UEPAA	1.52	2.31	2.21				15.20				
		Exchange Ports - 2-Wire Voice Louisiana Business Dialing Plan without Caller ID			UEPSB	UEPWH	1.52	2.31	2.21				15.20				
		Exchange Ports - 2-Wire Voice Louisiana Business Area Calling Port without Caller ID			UEPSB	UEPBA	1.52	2.31	2.21				15.20				
		2-Wire voice unbundled Incoming Only Port without Caller ID Capability			UEPSB	UEPBE	1.52	2.31	2.21				15.20				
		Subsequent Activity			UEPSB	USASC	0.00	0.00	0.00				15.20				
	FEATURES																
		All Available Vertical Features			UEPSB	UEPVF	0.00	0.00	0.00				15.20				
	EXCHANGE PORT RATES (DID & PBX)																
		2-Wire VG Unbundled 2-Way PBX Trunk - Res			UEPSE	UEPRD	1.52	30.37	14.42				15.20				
		2-Wire VG Line Side Unbundled 2-Way PBX Trunk - Bus			UEPSP	UEPPC	1.52	30.37	14.42				15.20				
		2-Wire VG Line Side Unbundled Outward PBX Trunk - Bus			UEPSP	UEPPO	1.52	30.37	14.42				15.20				
		2-Wire VG Line Side Unbundled Incoming PBX Trunk - Bus			UEPSP	UEPP1	1.52	30.37	14.42				15.20				
		2-Wire Analog Long Distance Terminal PBX Trunk - Bus			UEPSP	UEPLD	1.52	30.37	14.42				15.20				
		2-Wire Voice Unbundled 2-Way PBX Louisiana Calling Port			UEPSP	UEPL2	1.52	30.37	14.42				15.20				
		2-Wire Voice Unbundled PBX LD Terminal Ports			UEPSP	UEPLD	1.52	30.37	14.42				15.20				
		2-Wire Vice Unbundled 2-Way PBX Usage Port			UEPSP	UEPXA	1.52	30.37	14.42				15.20				
		2-Wire Voice Unbundled PBX Toll Terminal Hotel Ports			UEPSP	UEPXB	1.52	30.37	14.42				15.20				
		2-Wire Voice Unbundled PBX LD DDD Terminals Port			UEPSP	UEPXC	1.52	30.37	14.42				15.20				
		2-Wire Voice Unbundled PBX LD Terminal Switchboard Port			UEPSP	UEPXD	1.52	30.37	14.42				15.20				
		2-Wire Voice Unbundled PBX LD Terminal Switchboard IDD Capable Port			UEPSP	UEPXE	1.52	30.37	14.42				15.20				
		2-Wire Voice Unbundled 2-Way PBX Louisiana Local Optional Callling Port			UEPSP	UEPXK	1.52	30.37	14.42				15.20				
		2-Wire Voice Unbundled 2-Way PBX Hotel/Hospital Economy Administrative Calling Port			UEPSP	UEPXL	1.52	30.37	14.42				15.20				
		2-Wire Voice Unbundled 2-Way PBX Hotel/Hospital Economy Room Calling Port			UEPSP	UEPXM	1.52	30.37	14.42				15.20				
		2-Wire Voice Unbundled 1-Way Outgoing PBX Hotel/Hospital Discount Room Calling Port			UEPSP	UEPXO	1.52	30.37	14.42				15.20				
		2-Wire Voice Unbundled 1-Way Outgoing PBX Louisiana Local Discount Calling Port			UEPSP	UEPXP	1.52	30.37	14.42				15.20				
		2-Wire Voice Unbundled 1-Way Outgoing PBX Measured Port			UEPSP	UEPXS	1.52	30.37	14.42				15.20				
		Subsequent Activity			UEPSP	USASC	0.00	0.00	0.00				15.20				

UNBUNDLED NETWORK ELEMENTS - Louisiana													Attachment: 2		Exhibit: B	
CATEGORY	RATE ELEMENTS	Interim	Zone	BCS	USOC	RATES ($)					Svc Order Submitted Elec per LSR	Svc Order Submitted Manually per LSR	Incremental Charge - Manual Svc Order vs. Electronic-1st	Incremental Charge - Manual Svc Order vs. Electronic-Add'l	Incremental Charge - Manual Svc Order vs. Electronic-Disc 1st	Incremental Charge - Manual Svc Order vs. Electronic-Disc Add'l
						Rec	Nonrecurring		Nonrecurring Disconnect		OSS Rates($)					
							First	Add'l	First	Add'l	SOMEC	SOMAN	SOMAN	SOMAN	SOMAN	SOMAN
FEATURES																
	All Available Vertical Features			UEPSP UEPSE	UEPVF	0.00	0.00	0.00				15.20				
EXCHANGE PORT RATES (COIN)																
	Exchange Ports - Coin Port					1.52	2.31	2.21				15.20				
NOTE: Transmission/usage charges associated with POTS circuit switched usage will also apply to circuit switched voice and/or circuit switched data transmission by B-Channels associated with 2-wire ISDN ports.																
NOTE: Access to B Channel or D Channel Packet capabilities will be available only through BFR/New Business Request Process. Rates for the packet capabilities will be determined via the Bona Fide Request/New Business Request Process.																
UNBUNDLED LOCAL EXCHANGE SWITCHING(PORTS)																
EXCHANGE PORT RATES																
	Exchange Ports - 2-Wire DID Port			UEPEX	UEPP2	8.29	115.85	18.20				15.20				
	Exchange Ports - DDITS Port - 4-Wire DS1 Port with DID capability			UEPDD	UEPDD	68.47	196.18	92.92				15.20				
	Exchange Ports - 2-Wire ISDN Port (See Notes below.)			UEPTX UEPSX	U1PMA	10.07	70.76	51.46				15.20				
	All Features Offered			UEPTX UEPSX	UEPVF	0.00	0.00	0.00								
NOTE: Transmission/usage charges associated with POTS circuit switched usage will also apply to circuit switched voice and/or circuit switched data transmission by B-Channels associated with 2-wire ISDN ports.																
NOTE: Access to B Channel or D Channel Packet capabilities will be available only through BFR/New Business Request Process. Rates for the packet capabilities will be determined via the Bona Fide Request/New Business Request Process.																
	Exchange Ports - 2-Wire ISDN Port -- Channel Profiles			UEPTX UEPSX	U1UMA	0.00	0.00	0.00								
	Exchange Ports - 4-Wire ISDN DS1 Port			UEPEX	UEPEX	94.82	197.92	98.62				15.20				
UNBUNDLED PORT with REMOTE CALL FORWARDING CAPABILITY																
UNBUNDLED REMOTE CALL FORWARDING SERVICE - RESIDENCE																
	Unbundled Remote Call Forwarding Service, Area Calling, Res			UEPVR	UERAC	1.52	2.31	2.21				15.20				
	Unbundled Remote Call Forwarding Service, Local Calling - Res			UEPVR	UERLC	1.52	2.31	2.21				15.20				
	Unbundled Remote Call Forwarding Service, InterLATA - Res			UEPVR	UERTE	1.52	2.31	2.21				15.20				
	Unbundled Remote Call Forwarding Service, IntraLATA - Res			UEPVR	UERTR	1.52	2.31	2.21				15.20				
Non-Recurring																
	Unbundled Remote Call Forwarding Service - Conversion - Switch-as-is			UEPVR	USAC2		0.10	0.10				15.20				
	Unbundled Remote Call Forwarding Service - Conversion with allowed change (PIC and LPIC)			UEPVR	USACC		0.10	0.10								
UNBUNDLED REMOTE CALL FORWARDING - Bus																
	Unbundled Remote Call Forwarding Service, Area Calling - Bus			UEPVB	UERAC	1.52	2.31	2.21				15.20				
	Unbundled Remote Call Forwarding Service, Local Calling - Bus			UEPVB	UERLC	1.52	2.31	2.21				15.20				
	Unbundled Remote Call Forwarding Service, InterLATA - Bus			UEPVB	UERTE	1.52	2.31	2.21				15.20				
	Unbundled Remote Call Forwarding Service, IntraLATA - Bus			UEPVB	UERTR	1.52	2.31	2.21				15.20				
	Unbundled Remote Call Forwarding Service Expanded and Exception Local Calling			UEPVB	UERVJ	1.52	2.31	2.21				15.20				
Non-Recurring																
	Unbundled Remote Call Forwarding Service - Conversion - Switch-as-is			UEPVB	USAC2		0.10	0.10				15.20				
	Unbundled Remote Call Forwarding Service - Conversion with allowed change (PIC and LPIC)			UEPVB	USACC		0.10	0.10								
UNBUNDLED LOCAL SWITCHING, PORT USAGE																
End Office Switching (Port Usage)																
	End Office Switching Function, Per MOU					0.001868										
	End Office Trunk Port - Shared, Per MOU					0.00018										
Tandem Switching (Port Usage) (Local or Access Tandem)																
	Tandem Switching Function Per MOU					0.0001067										
	Tandem Trunk Port - Shared, Per MOU					0.000222										
Common Transport																
	Common Transport - Per Mile, Per MOU					0.0000032										
	Common Transport - Facilities Termination Per MOU					0.0003748										
UNBUNDLED PORT/LOOP COMBINATIONS - COST BASED RATES																
Cost Based Rates are applied where BellSouth is required by FCC and/or State Commission rule to provide Unbundled Local Switching or Switch Ports.																
Features shall apply to the Unbundled Port/Loop Combination - Cost Based Rate section in the same manner as they are applied to the Stand-Alone Unbundled Port section of this Rate Exhibit.																
End Office and Tandem Switching Usage and Common Transport Usage rates in the Port section of this rate exhibit shall apply to all combinations of loop/port network elements except for UNE Coin Port/Loop Combinations.																
The first and additional Port nonrecurring charges apply to Not Currently Combined Combos. For Currently Combined Combos the nonrecurring charges shall be those identified in the Nonrecurring - Currently Combined sections.																
2-WIRE VOICE GRADE LOOP WITH 2-WIRE LINE PORT (RES)																

UNBUNDLED NETWORK ELEMENTS - Louisiana														Attachment: 2		Exhibit: B	
CATEGORY		RATE ELEMENTS	Interim	Zone	BCS	USOC	RATES ($)					Svc Order Submitted Elec per LSR	Svc Order Submitted Manually per LSR	Incremental Charge - Manual Svc Order vs. Electronic-1st	Incremental Charge - Manual Svc Order vs. Electronic-Add'l	Incremental Charge - Manual Svc Order vs. Electronic-Disc 1st	Incremental Charge - Manual Svc Order vs. Electronic-Disc Add'l
							Rec	Nonrecurring		Nonrecurring Disconnect		OSS Rates($)					
								First	Add'l	First	Add'l	SOMEC	SOMAN	SOMAN	SOMAN	SOMAN	SOMAN
	UNE Port/Loop Combination Rates																
		2-Wire VG Loop/Port Combo - Zone 1		1			13.13										
		2-Wire VG Loop/Port Combo - Zone 2		2			23.75										
		2-Wire VG Loop/Port Combo - Zone 3		3			49.62										
	UNE Loop Rates																
		2-Wire Voice Grade Loop (SL1) - Zone 1		1	UEPRX	UEPLX	11.77										
		2-Wire Voice Grade Loop (SL1) - Zone 2		2	UEPRX	UEPLX	22.39										
		2-Wire Voice Grade Loop (SL1) - Zone 3		3	UEPRX	UEPLX	48.26										
	2-Wire Voice Grade Line Port Rates (Res)																
		2-Wire voice unbundled port - residence			UEPRX	UEPRL	1.36	38.85	19.08				15.20				
		2-Wire voice unbundled port with Caller ID - res			UEPRX	UEPRC	1.36	38.85	19.08				15.20				
		2-Wire voice unbundled port outgoing only - res			UEPRX	UEPRO	1.36	38.85	19.08				15.20				
		2-Wire voice Grade unbundled Louisiana extended local dialing parity port with Caller ID - res			UEPRX	UEPAS	1.36	38.85	19.08				15.20				
		2-Wire voice unbundled Louisiana Area Plus with Caller ID - res (RUL)			UEPRX	UEPAG	1.36	38.85	19.08				15.20				
		2-Wire voice unbundles res, low usage line port with Caller ID (LUM)			UEPRX	UEPAP	1.36	38.85	19.08				15.20				
		2-Wire Voice Unbundled Louisiana Residence Dialing Plan without Caller ID			UEPRX	UEPWG	1.36	38.85	19.08				15.20				
		2-Wire voice unbundled Louisiana Area Plus Port without Caller ID Capability			UEPRX	UEPRQ	1.36	38.85	19.08				15.20				
		2-Wire voice unbundled Low Usage Line Port without Caller ID Capability			UEPRX	UEPRT	1.36	38.85	19.08				15.20				
	FEATURES																
		All Features Offered			UEPRX	UEPVF	0.00	0.00	0.00				15.20				
	LOCAL NUMBER PORTABILITY																
		Local Number Portability (1 per port)			UEPRX	LNPCX	0.35										
	NONRECURRING CHARGES (NRCs) - CURRENTLY COMBINED																
		2-Wire Voice Grade Loop / Line Port Combination - Conversion - Switch-as-is			UEPRX	USAC2		0.10	0.10				15.20				
		2-Wire Voice Grade Loop / Line Port Combination - Conversion - Switch with change			UEPRX	USACC		0.10	0.10				15.20				
	ADDITIONAL NRCs																
		2-Wire Voice Grade Loop/Line Port Combination - Subsequent Activity			UEPRX	USAS2	0.00	0.00	0.00				15.20				
	2-WIRE VOICE GRADE LOOP WITH 2-WIRE LINE PORT (BUS)																
	UNE Port/Loop Combination Rates																
		2-Wire VG Loop/Port Combo - Zone 1		1			13.13										
		2-Wire VG Loop/Port Combo - Zone 2		2			23.75									20.00	
		2-Wire VG Loop/Port Combo - Zone 3		3			49.62										
	UNE Loop Rates																
		2-Wire Voice Grade Loop (SL1) - Zone 1		1	UEPBX	UEPLX	11.77										
		2-Wire Voice Grade Loop (SL1) - Zone 2		2	UEPBX	UEPLX	22.39										
		2-Wire Voice Grade Loop (SL1) - Zone 3		3	UEPBX	UEPLX	48.26										
	2-Wire Voice Grade Line Port (Bus)																
		2-Wire voice unbundled port without Caller ID - bus			UEPBX	UEPBL	1.36	38.85	19.08				15.20				
		2-Wire voice unbundled port with Caller + E484 ID - bus			UEPBX	UEPBC	1.36	38.85	19.08				15.20				
		2-Wire voice unbundled port outgoing only - bus			UEPBX	UEPBO	1.36	38.85	19.08				15.20				
		2-Wire voice Grade unbundled Louisiana extended local dialing parity port with Caller ID - bus			UEPBX	UEPAX	1.36	38.85	19.08				15.20				
		2-Wire voice unbundled incoming only port with Caller ID - Bus			UEPBX	UEPB1	1.36	38.85	19.08				15.20				
		2-Wire voice unbundled Louisiana Bus Area Calling Port with Caller ID (BUC)			UEPBX	UEPAA	1.36	38.85	19.08				15.20				
		2-Wire Voice Unbundled Louisiana Business Dialing Plan without Caller ID			UEPBX	UEPWH	1.36	38.85	19.08				15.20				
		2-Wire voice unbundled Louisiana Business Area Calling Port without Caller ID Capability			UEPBX	UEPBA	1.36	38.85	19.08				15.20				

CATEGORY	RATE ELEMENTS	Interim	Zone	BCS	USOC	RATES ($) Rec	Nonrecurring First	Nonrecurring Add'l	Nonrecurring Disconnect First	Nonrecurring Disconnect Add'l	Svc Order Submitted Elec per LSR	Svc Order Submitted Manually per LSR	Attachment: 2 Incremental Charge - Manual Svc Order vs. Electronic- 1st	Attachment: 2 Incremental Charge - Manual Svc Order vs. Electronic- Add'l	Exhibit: B Incremental Charge - Manual Svc Order vs. Electronic- Disc 1st	Exhibit: B Incremental Charge - Manual Svc Order vs. Electronic- Disc Add'l
											OSS Rates($)					
							First	Add'l	First	Add'l	SOMEC	SOMAN	SOMAN	SOMAN	SOMAN	SOMAN
	2-Wire voice unbundled Incoming Only Port without Caller ID Capability			UEPBX	UEPBE	1.36	38.85	19.08				15.20				
LOCAL NUMBER PORTABILITY																
	Local Number Portability (1 per port)			UEPBX	LNPCX	0.35										
FEATURES																
	All Features Offered			UEPBX	UEPVF	0.00	0.00	0.00				15.20				
NONRECURRING CHARGES (NRCs) - CURRENTLY COMBINED																
	2-Wire Voice Grade Loop / Line Port Combination - Conversion - Switch-as-is			UEPBX	USAC2		0.10	0.10				15.20				
	2-Wire Voice Grade Loop / Line Port Combination - Conversion - Switch with change			UEPBX	USACC		0.10	0.10				15.20				
ADDITIONAL NRCs																
	2-Wire Voice Grade Loop/Line Port Combination - Subsequent Activity			UEPBX	USAS2		0.00	0.00				15.20				
2-WIRE VOICE GRADE LOOP WITH 2-WIRE LINE PORT (RES - PBX)																
UNE Port/Loop Combination Rates																
	2-Wire VG Loop/Port Combo - Zone 1		1			13.13										
	2-Wire VG Loop/Port Combo - Zone 2		2			23.75										
	2-Wire VG Loop/Port Combo - Zone 3		3			49.62										
UNE Loop Rates																
	2-Wire Voice Grade Loop (SL 1) - Zone 1		1	UEPRG	UEPLX	11.77										
	2-Wire Voice Grade Loop (SL 1) - Zone 2		2	UEPRG	UEPLX	22.39										
	2-Wire Voice Grade Loop (SL 1) - Zone 3		3	UEPRG	UEPLX	48.26										
2-Wire Voice Grade Line Port Rates (RES - PBX)																
	2-Wire VG Unbundled Combination 2-Way PBX Trunk Port - Res			UEPRG	UEPRD	1.36	66.91	31.29				15.20				
LOCAL NUMBER PORTABILITY																
	Local Number Portability (1 per port)			UEPRG	LNPCP	3.15	0.00	0.00				15.20				
FEATURES																
	All Features Offered			UEPRG	UEPVF	0.00	0.00	0.00				15.20				
NONRECURRING CHARGES (NRCs) - CURRENTLY COMBINED																
	2-Wire Voice Grade Loop/ Line Port Combination (PBX) - Conversion - Switch-As-Is			UEPRG	USAC2		7.68	1.85				15.20				
	2-Wire Voice Grade Loop/ Line Port Combination (PBX) - Conversion - Switch with Change			UEPRG	USACC		7.68	1.85				15.20				
ADDITIONAL NRCs																
	2-Wire Voice Grade Loop/ Line Port Combination (PBX) - Subsequent Activity			UEPRG	USAS2	0.00	0.00	0.00				15.20				
	PBX Subsequent Activity - Change/Rearrange Multiline Hunt Group						7.11	7.11				15.20				
2-WIRE VOICE GRADE LOOP WITH 2-WIRE LINE PORT (BUS - PBX)																
UNE Port/Loop Combination Rates																
	2-Wire VG Loop/Port Combo - Zone 1		1			13.13										
	2-Wire VG Loop/Port Combo - Zone 2		2			23.75										
	2-Wire VG Loop/Port Combo - Zone 3		3			49.62										
UNE Loop Rates																
	2-Wire Voice Grade Loop (SL 1) - Zone 1		1	UEPPX	UEPLX	11.77										
	2-Wire Voice Grade Loop (SL 1) - Zone 2		2	UEPPX	UEPLX	22.39										
	2-Wire Voice Grade Loop (SL 1) - Zone 3		3	UEPPX	UEPLX	48.26										
2-Wire Voice Grade Line Port Rates (BUS - PBX)																
	Line Side Unbundled Combination 2-Way PBX Trunk Port - Bus			UEPPX	UEPPC	1.36	66.91	31.29				15.20				
	Line Side Unbundled Outward PBX Trunk Port - Bus			UEPPX	UEPPO	1.36	66.91	31.29				15.20				
	Line Side Unbundled Incoming PBX Trunk Port - Bus			UEPPX	UEPP1	1.36	66.91	31.29				15.20				
	2-Wire Voice Unbundled 2-Way Combination PBX Louisiana Calling Port			UEPPX	UEPL2	1.36	66.91	31.29				15.20				
	2-Wire Voice Unbundled PBX LD Terminal Ports			UEPPX	UEPLD	1.36	66.91	31.29				15.20				
	2-Wire Voice Unbundled 2-Way Combination PBX Usage Port			UEPPX	UEPXA	1.36	66.91	31.29				15.20				
	2-Wire Voice Unbundled PBX Toll Terminal Hotel Ports			UEPPX	UEPXB	1.36	66.91	31.29				15.20				

UNBUNDLED NETWORK ELEMENTS - Louisiana														Attachment: 2		Exhibit: B	
CATEGORY		RATE ELEMENTS	Interim	Zone	BCS	USOC	RATES ($)					Svc Order Submitted Elec per LSR	Svc Order Submitted Manually per LSR	Incremental Charge - Manual Svc Order vs. Electronic-1st	Incremental Charge - Manual Svc Order vs. Electronic-Add'l	Incremental Charge - Manual Svc Order vs. Electronic-Disc 1st	Incremental Charge - Manual Svc Order vs. Electronic-Disc Add'l
							Rec	Nonrecurring		Nonrecurring Disconnect		OSS Rates($)					
								First	Add'l	First	Add'l	SOMEC	SOMAN	SOMAN	SOMAN	SOMAN	SOMAN
		2-Wire Voice Unbundled PBX LD DDD Terminals Port			UEPPX	UEPXC	1.36	66.91	31.29				15.20				
		2-Wire Voice Unbundled PBX LD Terminal Switchboard Port			UEPPX	UEPXD	1.36	66.91	31.29				15.20				
		2-Wire Voice Unbundled PBX LD Terminal Switchboard IDD Capable Port			UEPPX	UEPXE	1.36	66.91	31.29				15.20				
		2-Wire Voice Unbundled 2-Way PBX Louisiana Local Optional Calling Port			UEPPX	UEPXK	1.36	66.91	31.29				15.20				
		2-Wire Voice Unbundled 2-Way PBX Hotel/Hospital Economy Administrative Calling Port			UEPPX	UEPXL	1.36	66.91	31.29				15.20				
		2-Wire Voice Unbundled 2-Way PBX Hotel/Hospital Economy Room Calling Port			UEPPX	UEPXM	1.36	66.91	31.29				15.20				
		2-Wire Voice Unbundled 1-Way Outgoing PBX Hotel/Hospital Discount Room Calling Port			UEPPX	UEPXO	1.36	66.91	31.29				15.20				
		2-Wire Voice Unbundled 1-Way Outgoing PBX Louisiana Local Discount Calling Port			UEPPX	UEPXP	1.36	66.91	31.29				15.20				
		2-Wire Voice Unbundled 1-Way Outgoing PBX Measured Port			UEPPX	UEPXS	1.36	66.91	31.29				15.20				
	LOCAL NUMBER PORTABILITY																
		Local Number Portability (1 per port)			UEPPX	LNPCP	3.15	0.00	0.00				15.20				
	FEATURES																
		All Features Offered			UEPPX	UEPVF	0.00	0.00	0.00				15.20				
	NONRECURRING CHARGES (NRCs) - CURRENTLY COMBINED																
		2-Wire Voice Grade Loop/ Line Port Combination (PBX) - Conversion - Switch-As-Is			UEPPX	USAC2		7.68	1.85				15.20				
		2-Wire Voice Grade Loop/ Line Port Combination (PBX) - Conversion - Switch with Change			UEPPX	USACC		7.68	1.85				15.20				
	ADDITIONAL NRCs																
		2-Wire Voice Grade Loop/ Line Port Combination (PBX) - Subsequent Activity			UEPPX	USAS2	0.00	0.00	0.00				15.20				
		PBX Subsequent Activity - Change/Rearrange Multiline Hunt Group						7.11	7.11				15.20				
	2-WIRE VOICE GRADE LOOP WITH 2-WIRE ANALOG LINE COIN PORT																
	UNE Port/Loop Combination Rates																
		2-Wire VG Coin Port/Loop Combo – Zone 1		1			13.13										
		2-Wire VG Coin Port/Loop Combo – Zone 2		2			23.75										
		2-Wire VG Coin Port/Loop Combo – Zone 3		3			49.62										
	UNE Loop Rates																
		2-Wire Voice Grade Loop (SL1) - Zone 1		1	UEPCO	UEPLX	11.77										
		2-Wire Voice Grade Loop (SL1) - Zone 2		2	UEPCO	UEPLX	22.39										
		2-Wire Voice Grade Loop (SL1) - Zone 3		3	UEPCO	UEPLX	48.26										
	2-Wire Voice Grade Line Ports (COIN)																
		2-Wire Coin 2-Way without Operator Screening and without Blocking (AL, KY, LA, MS)			UEPCO	UEPRF	1.36	38.85	19.08				15.20				
		2-Wire Coin 2-Way with Operator Screening and Blocking: 011, 900/976, 1+DDD (AL, KY, LA, MS)			UEPCO	UEPRA	1.36	38.85	19.08				15.20				
		2-Wire Coin 2-Way with Operator Screening and 011 Blocking (AL, LA, MS)			UEPCO	UEPRB	1.36	38.85	19.08				15.20				
		2-Wire Coin 2-Way with Operator Screening & Blocking: 900/976, 1+DDD, 011+, & Local (AL, KY, LA, MS)			UEPCO	UEPCD	1.36	38.85	19.08				15.20				
		2-Wire Coin Outward without Blocking and without Operator Screening (KY, LA, MS)			UEPCO	UEPRN	1.36	38.85	19.08				15.20				
		2-Wire Coin Outward with Operator Screening and 011 Blocking (LA)			UEPCO	UEPLA	1.36	38.85	19.08				15.20				
		2-Wire Coin Outward with Operator Screening and Blocking: 011, 900/976, 1+DDD (AL, KY, LA, MS)			UEPCO	UEPRH	1.36	38.85	19.08				15.20				
		2-Wire Coin Outward Operator Screening & Blocking: 900/976, 1+DDD, 011+, and Local (AL, KY, LA, MS)			UEPCO	UEPCN	1.36	38.85	19.08				15.20				
		2-Wire Coin 2-Way Smartline with 900/976 (Louisiana only)			UEPCO	UEPNA	1.36	38.85	19.08				15.20				
		2-Wire Coin Outward Smartline with 900/976 (Louisiana only)			UEPCO	UEPCB	1.36	38.85	19.08				15.20				
	ADDITIONAL UNE COIN PORT/LOOP (RC)																
		UNE Coin Port/Loop Combo Usage (Flat Rate)			UEPCO	URECU	1.81	0.00	0.00	0.00	0.00		15.20				

UNBUNDLED NETWORK ELEMENTS - Louisiana													Attachment: 2		Exhibit: B	
CATEGORY	RATE ELEMENTS	Interim	Zone	BCS	USOC	RATES ($)					Svc Order Submitted Elec per LSR	Svc Order Submitted Manually per LSR	Incremental Charge - Manual Svc Order vs. Electronic-1st	Incremental Charge - Manual Svc Order vs. Electronic-Add'l	Incremental Charge - Manual Svc Order vs. Electronic-Disc 1st	Incremental Charge - Manual Svc Order vs. Electronic-Disc Add'l
						Rec	Nonrecurring		Nonrecurring Disconnect		OSS Rates($)					
							First	Add'l	First	Add'l	SOMEC	SOMAN	SOMAN	SOMAN	SOMAN	SOMAN
LOCAL NUMBER PORTABILITY																
	Local Number Portability (1 per port)			UEPCO	LNPCX	0.35										
NONRECURRING CHARGES - CURRENTLY COMBINED																
	2-Wire Voice Grade Loop / Line Port Combination - Conversion - Switch-as-is			UEPCO	USAC2		0.10	0.10				15.20				
	2-Wire Voice Grade Loop / Line Port Combination - Conversion - Switch with change			UEPCO	USACC		0.10	0.10				15.20				
ADDITIONAL NRCs																
	2-Wire Voice Grade Loop/Line Port Combination - Subsequent Activity			UEPCO	USAS2		0.00	0.00				15.20				
2-WIRE VOICE LOOP/ 2WIRE VOICE GRADE IO TRANSPORT/ 2-WIRE LINE PORT (RES)																
UNE Port/Loop Combination Rates																
	2-Wire VG Loop/IO Tranport/Port Combo - Zone 1		1			16.45										
	2-Wire VG Loop/IO Tranport/Port Combo - Zone 2		2			26.87										
	2-Wire VG Loop/IO Tranport/Port Combo - Zone 3		3			51.98										
UNE Loop Rates																
	2-Wire Voice Grade Loop (SL2) - Zone 1		1	UEPFR	UECF2	14.93										
	2-Wire Voice Grade Loop (SL2) - Zone 2		2	UEPFR	UECF2	25.35										
	2-Wire Voice Grade Loop (SL2) - Zone 3		3	UEPFR	UECF2	50.46										
2-Wire Voice Grade Line Port Rates (Res)																
	2-Wire voice unbundled port - residence			UEPFR	UEPRL	1.52	104.41	67.93				15.20				
	2-Wire voice unbundled port with Caller ID - res			UEPFR	UEPRC	1.52	104.41	67.93				15.20				
	2-Wire voice unbundled port outgoing only - res			UEPFR	UEPRO	1.52	104.41	67.93				15.20				
	2-Wire voice Grade unbundled Louisiana extended local dialing parity port with Caller ID - res			UEPFR	UEPAS	1.52	104.41	67.93				15.20				
	2-Wire voice unbundled Louisiana Area Plus with Caller ID - res (RUL)			UEPFR	UEPAG	1.52	104.41	67.93				15.20				
	2-Wire voice unbundles res, low usage line port with Caller ID (LUM)			UEPFR	UEPAP	1.52	104.41	67.93				15.20				
	2-Wire Voice Unbundled Louisiana Residence Dialing Plan without Caller ID			UEPFR	UEPWG	1.52	104.41	67.93				15.20				
INTEROFFICE TRANSPORT																
	Interoffice Transport - Dedicated - 2 Wire Voice Grade - Facility Termination			UEPFR	U1TV2	22.60	39.36	26.62				15.20				
	Interoffice Transport - Dedicated - 2 Wire Voice Grade - Per Mile or Fraction Mile			UEPFR	1L5XX	0.013										
FEATURES																
	All Features Offered			UEPFR	UEPVF	0.00	0.00	0.00				15.20				
LOCAL NUMBER PORTABILITY																
	Local Number Portability (1 per port)			UEPFR	LNPCX	0.35										
NONRECURRING CHARGES (NRCs) - CURRENTLY COMBINED																
	2-Wire Loop / Dedicated IO Transport / 2 Wire Line Port Combination - Conversion - Switch-as-is			UEPFR	USAC2		8.24	1.81				15.20				
	2-Wire Loop / Dedicated IO Transport / 2 Wire Line Port Combination - Conversion - Switch-With-Change			UEPFR	USACC		8.24	1.81				15.20				
2-WIRE VOICE LOOP/ 2WIRE VOICE GRADE IO TRANSPORT/ 2-WIRE LINE PORT (BUS)																
UNE Port/Loop Combination Rates																
	2-Wire VG Loop/IO Tranport/Port Combo - Zone 1		1			16.45										
	2-Wire VG Loop/IO Tranport/Port Combo - Zone 2		2			26.87										
	2-Wire VG Loop/IO Tranport/Port Combo - Zone 3		3			51.98										
UNE Loop Rates																
	2-Wire Voice Grade Loop (SL2) - Zone 1		1	UEPFB	UECF2	14.93										
	2-Wire Voice Grade Loop (SL2) - Zone 2		2	UEPFB	UECF2	25.35										
	2-Wire Voice Grade Loop (SL2) - Zone 3		3	UEPFB	UECF2	50.46										
2-Wire Voice Grade Line Port (Bus)																
	2-Wire voice unbundled port without Caller ID - bus			UEPFB	UEPBL	1.52	104.41	67.93				15.20				
	2-Wire voice unbundled port with Caller + E484 ID - bus			UEPFB	UEPBC	1.52	104.41	67.93				15.20				
	2-Wire voice unbundled port outgoing only - bus			UEPFB	UEPBO	1.52	104.41	67.93				15.20				

CATEGORY	RATE ELEMENTS	Interim	Zone	BCS	USOC	RATES ($)					Svc Order Submitted Elec per LSR	Svc Order Submitted Manually per LSR	Attachment: 2		Exhibit: B	
													Incremental Charge - Manual Svc Order vs. Electronic-1st	Incremental Charge - Manual Svc Order vs. Electronic-Add'l	Incremental Charge - Manual Svc Order vs. Electronic-Disc 1st	Incremental Charge - Manual Svc Order vs. Electronic-Disc Add'l
						Rec	Nonrecurring		Nonrecurring Disconnect		OSS Rates($)					
							First	Add'l	First	Add'l	SOMEC	SOMAN	SOMAN	SOMAN	SOMAN	SOMAN
	2-Wire voice Grade unbundled Alabama extended local dialing parity port with Caller ID - bus			UEPFB	UEPAW											
	2-Wire voice Grade unbundled Louisiana extended local dialing parity port with Caller ID - bus			UEPFB	UEPAX	1.52	104.41	67.93				15.20				
	2-Wire voice unbundled incoming only port with Caller ID - Bus			UEPFB	UEPB1	1.52	104.41	67.93				15.20				
	2-Wire voice unbundled Louisiana Bus Area Calling Port with Caller ID (BUC)			UEPFB	UEPAA	1.52	104.41	67.93				15.20				
	2-Wire Voice Unbundled Louisiana Business Dialing Plan without Caller ID			UEPFB	UEPWH	1.52	104.41	67.93				15.20				
LOCAL NUMBER PORTABILITY																
	Local Number Portability (1 per port)			UEPFB	LNPCX	0.35										
INTEROFFICE TRANSPORT																
	Interoffice Transport - Dedicated - 2 Wire Voice Grade - Facility Termination			UEPFB	U1TV2	22.60	39.36	26.62				15.20				
	Interoffice Transport - Dedicated - 2 Wire Voice Grade - Per Mile or Fraction Mile			UEPFB	1L5XX	0.013										
FEATURES																
	All Features Offered			UEPFB	UEPVF	0.00	0.00	0.00				15.20				
NONRECURRING CHARGES (NRCs) - CURRENTLY COMBINED																
	2-Wire Loop / Dedicated IO Transport / 2 Wire Line Port Combination - Conversion - Switch-as-is			UEPFB	USAC2		8.24	1.81				15.20				
	2-Wire Loop / Dedicated IO Transport / 2 Wire Line Port Combination - Conversion - Switch with change			UEPFB	USACC		8.24	1.81				15.20				
2-WIRE VOICE GRADE LOOP WITH 2-WIRE LINE PORT (BUS - PBX)																
UNE Port/Loop Combination Rates																
	2-Wire VG Loop/IO Tranport/Port Combo - Zone 1		1			16.45										
	2-Wire VG Loop/IO Tranport/Port Combo - Zone 2		2			26.87										
	2-Wire VG Loop/IO Tranport/Port Combo - Zone 3		3			51.98										
UNE Loop Rates																
	2-Wire Voice Grade Loop (SL2) - Zone 1		1	UEPFP	UECF2	14.93										
	2-Wire Voice Grade Loop (SL2) - Zone 2		2	UEPFP	UECF2	25.35										
	2-Wire Voice Grade Loop (SL2) - Zone 3		3	UEPFP	UECF2	50.46										
2-Wire Voice Grade Line Port Rates (BUS - PBX)																
	Line Side Unbundled Combination 2-Way PBX Trunk Port - Bus			UEPFP	UEPPC	1.52	132.47	82.14				15.20				
	Line Side Unbundled Outward PBX Trunk Port - Bus			UEPFP	UEPPO	1.52	132.47	82.14				15.20				
	Line Side Unbundled Incoming PBX Trunk Port - Bus			UEPFP	UEPP1	1.52	132.47	82.14				15.20				
	2-Wire Voice Unbundled 2-Way Combination PBX Louisiana Calling Port			UEPFP	UEPL2	1.52	132.47	82.14				15.20				
	2-Wire Voice Unbundled PBX LD Terminal Ports			UEPFP	UEPLD	1.52	132.47	82.14				15.20				
	2-Wire Voice Unbundled 2-Way Combination PBX Usage Port			UEPFP	UEPXA	1.52	132.47	82.14				15.20				
	2-Wire Voice Unbundled PBX Toll Terminal Hotel Ports			UEPFP	UEPXB	1.52	132.47	82.14				15.20				
	2-Wire Voice Unbundled PBX LD DDD Terminals Port			UEPFP	UEPXC	1.52	132.47	82.14				15.20				
	2-Wire Voice Unbundled PBX LD Terminal Switchboard Port			UEPFP	UEPXD	1.52	132.47	82.14				15.20				
	2-Wire Voice Unbundled PBX LD Terminal Switchboard IDD Capable Port			UEPFP	UEPXE	1.52	132.47	82.14				15.20				
	2-Wire Voice Unbundled 2-Way PBX Louisiana Local Optional Calling Port			UEPFP	UEPXK	1.52	132.47	82.14				15.20				
	2-Wire Voice Unbundled 2-Way PBX Hotel/Hospital Economy Administrative Calling Port			UEPFP	UEPXL	1.52	132.47	82.14				15.20				
	2-Wire Voice Unbundled 2-Way PBX Hotel/Hospital Economy Room Calling Port			UEPFP	UEPXM	1.52	132.47	82.14				15.20				
	2-Wire Voice Unbundled 1-Way Outgoing PBX Hotel/Hospital Discount Room Calling Port			UEPFP	UEPXO	1.52	132.47	82.14				15.20				
	2-Wire Voice Unbundled 1-Way Outgoing PBX Louisiana Local Discount Calling Port			UEPFP	UEPXP	1.52	132.47	82.14				15.20				
	2-Wire Voice Unbundled 1-Way Outgoing PBX Measured Port			UEPFP	UEPXS	1.52	132.47	82.14				15.20				
LOCAL NUMBER PORTABILITY																
	Local Number Portability (1 per port)			UEPFP	LNPCP	3.15	0.00	0.00				15.20				

UNBUNDLED NETWORK ELEMENTS - Louisiana													Attachment: 2		Exhibit: B	
CATEGORY	RATE ELEMENTS	Interim	Zone	BCS	USOC	RATES ($)					Svc Order Submitted Elec per LSR	Svc Order Submitted Manually per LSR	Incremental Charge - Manual Svc Order vs. Electronic-1st	Incremental Charge - Manual Svc Order vs. Electronic-Add'l	Incremental Charge - Manual Svc Order vs. Electronic-Disc 1st	Incremental Charge - Manual Svc Order vs. Electronic-Disc Add'l
						Rec	Nonrecurring		Nonrecurring Disconnect		OSS Rates($)					
							First	Add'l	First	Add'l	SOMEC	SOMAN	SOMAN	SOMAN	SOMAN	SOMAN
INTEROFFICE TRANSPORT																
	Interoffice Transport - Dedicated - 2 Wire Voice Grade - Facility Termination			UEPFP	U1TV2	22.60	39.36	26.62				15.20				
	Interoffice Transport - Dedicated - 2 Wire Voice Grade - Per Mile or Fraction Mile			UEPFP	1L5XX	0.013										
FEATURES																
	All Features Offered			UEPFP	UEPVF	0.00	0.00	0.00				15.20				
NONRECURRING CHARGES (NRCs) - CURRENTLY COMBINED																
	2-Wire Loop / Dedicated IO Transport / 2 Wire Line Port Combination - Conversion - Switch-as-is			UEPFP	USAC2		8.24	1.81				15.20				
	2-Wire Loop / Dedicated IO Transport / 2 Wire Line Port Combination - Conversion - Switch with change			UEPFP	USACC		8.24	1.81				15.20				
UNBUNDLED PORT/LOOP COMBINATIONS - COST BASED RATES																
2-WIRE VOICE GRADE LOOP- BUS ONLY - WITH 2-WIRE DID TRUNK PORT																
UNE Port/Loop Combination Rates																
	2-Wire VG Loop/2-Wire DID Trunk Port Combo - UNE Zone 1		1			23.20										
	2-Wire VG Loop/2-Wire DID Trunk Port Combo - UNE Zone 2		2			33.62										
	2-Wire VG Loop/2-Wire DID Trunk Port Combo - UNE Zone 3		3			58.73										
UNE Loop Rates																
	2-Wire Analog Voice Grade Loop - (SL2) - UNE Zone 1		1	UEPPX	UECD1	14.93						15.20				
	2-Wire Analog Voice Grade Loop - (SL2) - UNE Zone 2		2	UEPPX	UECD1	25.35						15.20				
	2-Wire Analog Voice Grade Loop - (SL2) - UNE Zone 3		3	UEPPX	UECD1	50.46						15.20				
UNE Port Rate																
	Exchange Ports - 2-Wire DID Port			UEPPX	UEPD1	8.27	217.95	83.92				15.20				
NONRECURRING CHARGES - CURRENTLY COMBINED																
	2-Wire Voice Grade Loop / 2-Wire DID Trunk Port Combination - Switch-as-is			UEPPX	USAC1		7.10	1.81				15.20				
	2-Wire Voice Grade Loop / 2-Wire DID Trunk Port Conversion with BellSouth Allowable Changes			UEPPX	USA1C		7.10	1.81				15.20				
ADDITIONAL NRCs																
	2-Wire DID Subsequent Activity - Add Trunks, Per Trunk			UEPPX	USAS1		26.01	26.01				15.20				
Telephone Number/Trunk Group Establisment Charges																
	DID Trunk Termination (One Per Port)			UEPPX	NDT	0.00	0.00	0.00				15.20				
	Additional DID Numbers for each Group of 20 DID Numbers			UEPPX	ND4	0.00	0.00	0.00				15.20				
	DID Numbers, Non- consecutive DID Numbers , Per Number			UEPPX	ND5	0.00	0.00	0.00				15.20				
	Reserve Non-Consecutive DID numbers			UEPPX	ND6	0.00	0.00	0.00				15.20				
	Reserve DID Numbers			UEPPX	NDV	0.00	0.00	0.00				15.20				
LOCAL NUMBER PORTABILITY																
	Local Number Portability (1 per port)			UEPPX	LNPCP	3.15	0.00	0.00								
2-WIRE ISDN DIGITAL GRADE LOOP WITH 2-WIRE ISDN DIGITAL LINE SIDE PORT																
UNE Port/Loop Combination Rates																
	2W ISDN Digital Grade Loop/2W ISDN Digital Line Side Port - UNE Zone 1		1	UEPPB UEPPR		27.48										
	2W ISDN Digital Grade Loop/2W ISDN Digital Line Side Port - UNE Zone 2		2	UEPPB UEPPR		40.34										
	2W ISDN Digital Grade Loop/2W ISDN Digital Line Side Port - UNE Zone 3		3	UEPPB UEPPR		70.99										
UNE Loop Rates																
	2-Wire ISDN Digital Grade Loop - UNE Zone 1		1	UEPPB UEPPR	USL2X	19.09						15.20				
	2-Wire ISDN Digital Grade Loop - UNE Zone 2		2	UEPPB UEPPR	USL2X	31.95						15.20				
	2-Wire ISDN Digital Grade Loop - UNE Zone 3		3	UEPPB UEPPR	USL2X	62.60						15.20				
UNE Port Rate																
	Exchange Port - 2-Wire ISDN Line Side Port			UEPPB UEPPR	UEPPB	8.39	184.10	128.42				15.20				
NONRECURRING CHARGES - CURRENTLY COMBINED																
	2-Wire ISDN Digital Grade Loop / 2-Wire ISDN Line Side Port Combination - Conversion			UEPPB UEPPR	USACB	0.00	37.40	26.23				15.20				
ADDITIONAL NRCs																
LOCAL NUMBER PORTABILITY																

CATEGORY	RATE ELEMENTS	Interim	Zone	BCS	USOC	RATES ($) Rec	Nonrecurring First	Nonrecurring Add'l	Nonrecurring Disconnect First	Nonrecurring Disconnect Add'l	Svc Order Submitted Elec per LSR	Svc Order Submitted Manually per LSR	Attachment: 2 Incremental Charge - Manual Svc Order vs. Electronic-1st	Attachment: 2 Incremental Charge - Manual Svc Order vs. Electronic-Add'l	Exhibit: B Incremental Charge - Manual Svc Order vs. Electronic-Disc 1st	Exhibit: B Incremental Charge - Manual Svc Order vs. Electronic-Disc Add'l
											OSS Rates($)					
											SOMEC	SOMAN	SOMAN	SOMAN	SOMAN	SOMAN
	Local Number Portability (1 per port)			UEPPB UEPPR	LNPCX	0.35	0.00	0.00								
	B-CHANNEL USER PROFILE ACCESS:															
	CVS/CSD (DMS/5ESS)			UEPPB UEPPR	U1UCA	0.00	0.00	0.00								
	CVS (EWSD)			UEPPB UEPPR	U1UCB	0.00	0.00	0.00								
	CSD			UEPPB UEPPR	U1UCC	0.00	0.00	0.00								
	B-CHANNEL AREA PLUS USER PROFILE ACCESS: (AL,KY,LA,MS SC,MS, & TN)															
	CVS/CSD (DMS/5ESS)			UEPPB UEPPR	U1UCD	0.00	0.00	0.00								
	CVS (EWSD)			UEPPB UEPPR	U1UCE	0.00	0.00	0.00								
	CSD			UEPPB UEPPR	U1UCF	0.00	0.00	0.00								
	USER TERMINAL PROFILE															
	User Terminal Profile (EWSD only)			UEPPB UEPPR	U1UMA	0.00	0.00	0.00								
	VERTICAL FEATURES															
	All Vertical Features - One per Channel B User Profile			UEPPB UEPPR	UEPVF	0.00	0.00	0.00				15.20				
	INTEROFFICE CHANNEL MILEAGE															
	Interoffice Channel mileage each, including first mile and facilities termination			UEPPB UEPPR	M1GNC	22.613	39.36	26.62				15.20				
	Interoffice Channel mileage each, additional mile			UEPPB UEPPR	M1GNM	0.013	0.00	0.00				15.20				
	4-WIRE DS1 DIGITAL LOOP WITH 4-WIRE ISDN DS1 DIGITAL TRUNK PORT															
	UNE Port/Loop Combination Rates															
	4W DS1 Digital Loop/4W ISDN DS1 Digital Trunk Port - UNE Zone 1		1	UEPPP		180.52										
	4W DS1 Digital Loop/4W ISDN DS1 Digital Trunk Port - UNE Zone 2		2	UEPPP		289.78										
	4W DS1 Digital Loop/4W ISDN DS1 Digital Trunk Port - UNE Zone 3		3	UEPPP		586.76										
	UNE Loop Rates															
	4-Wire DS1 Digital Loop - UNE Zone 1		1	UEPPP	USL4P	85.70						15.20				
	4-Wire DS1 Digital Loop - UNE Zone 2		2	UEPPP	USL4P	194.96						15.20				
	4-Wire DS1 Digital Loop - UNE Zone 3		3	UEPPP	USL4P	491.94						15.20				
	UNE Port Rate															
	Exchange Ports - 4-Wire ISDN DS1 Port			UEPPP	UEPPP	94.82	443.08	251.60				15.20				
	NONRECURRING CHARGES - CURRENTLY COMBINED															
	4-Wire DS1 Digital Loop / 4-Wire ISDN DS1 Digital Trunk Port Combination - Conversion -Switch-as-is			UEPPP	USACP	0.00	115.63	76.29				15.20				
	ADDITIONAL NRCs															
	4-Wire DS1 Loop/4-W ISDN Digtl Trk Port - Subsqt Actvy-Inward/two way Tel Nos. (except NC)			UEPPP	PR7TF		0.48					15.20				
	4-Wire DS1 Loop / 4-Wire ISDN DS1 Digital Trunk Port - Outward Tel Numbers (All States except NC)			UEPPP	PR7TO		11.18	11.18				15.20				
	4-Wire DS1 Loop / 4-Wire ISDN DS1 Digital Trk Port - Subsequent Inward Tel Numbers			UEPPP	PR7ZT		22.35	22.35				15.20				
	LOCAL NUMBER PORTABILITY															
	Local Number Portability (1 per port)			UEPPP	LNPCN	1.75										
	INTERFACE (Provsioning Only)															
	Voice/Data			UEPPP	PR71V	0.00	0.00	0.00								
	Digital Data			UEPPP	PR71D	0.00	0.00	0.00								
	Inward Data			UEPPP	PR71E	0.00	0.00	0.00								
	New or Additional "B" Channel															
	New or Additional - Voice/Data B Channel			UEPPP	PR7BV	0.00	14.11					15.20				
	New or Additional - Digital Data B Channel			UEPPP	PR7BF	0.00	14.11					15.20				
	New or Additional Inward Data B Channel			UEPPP	PR7BD	0.00	14.11					15.20				
	CALL TYPES															
	Inward			UEPPP	PR7C1	0.00	0.00	0.00								
	Outward			UEPPP	PR7CO	0.00	0.00	0.00								
	Two-way			UEPPP	PR7CC	0.00	0.00	0.00								
	Interoffice Channel Mileage															
	Fixed Each Including First Mile			UEPPP	1LN1A	70.7352	86.69	79.44				15.20				
	Each Airline-Fractional Additional Mile			UEPPP	1LN1B	0.2652										
	4-WIRE DS1 DIGITAL LOOP WITH 4-WIRE DDITS TRUNK PORT															

UNBUNDLED NETWORK ELEMENTS - Louisiana													Attachment: 2		Exhibit: B	
CATEGORY	RATE ELEMENTS	Interim	Zone	BCS	USOC	RATES ($)					Svc Order Submitted Elec per LSR	Svc Order Submitted Manually per LSR	Incremental Charge - Manual Svc Order vs. Electronic-1st	Incremental Charge - Manual Svc Order vs. Electronic-Add'l	Incremental Charge - Manual Svc Order vs. Electronic-Disc 1st	Incremental Charge - Manual Svc Order vs. Electronic-Disc Add'l
						Rec	Nonrecurring		Nonrecurring Disconnect		OSS Rates($)					
							First	Add'l	First	Add'l	SOMEC	SOMAN	SOMAN	SOMAN	SOMAN	SOMAN
UNE Port/Loop Combination Rates																
	4W DS1 Digital Loop/4W DDITS Trunk Port - UNE Zone 1		1	UEPDC		154.17						15.20				
	4W DS1 Digital Loop/4W DDITS Trunk Port - UNE Zone 2		2	UEPDC		263.43						15.20				
	4W DS1 Digital Loop/4W DDITS Trunk Port - UNE Zone 3		3	UEPDC		560.41						15.20				
UNE Loop Rates																
	4-Wire DS1 Digital Loop - UNE Zone 1		1	UEPDC	USLDC	85.70						15.20				
	4-Wire DS1 Digital Loop - UNE Zone 2		2	UEPDC	USLDC	194.96						15.20				
	4-Wire DS1 Digital Loop - UNE Zone 3		3	UEPDC	USLDC	491.94						15.20				
UNE Port Rate																
	4-Wire DDITS Digital Trunk Port			UEPDC	UDD1T	68.47	441.34	245.90				15.20				
NONRECURRING CHARGES - CURRENTLY COMBINED																
	4-Wire DS1 Digital Loop / 4-Wire DDITS Trunk Port Combination - Switch-as-is			UEPDC	USAC4		125.75	65.08				15.20				
	4-Wire DS1 Digital Loop / 4-Wire DDITS Trunk Port Combination - Conversion with DS1 Changes			UEPDC	USAWA		125.75	65.08				15.20				
	4-Wire DS1 Digital Loop / 4-Wire DDITS Trunk Port Combination - Conversion with Change - Trunk			UEPDC	USAWB		125.75	65.08				15.20				
ADDITIONAL NRCs																
	4-Wire DS1 Loop / 4-Wire DDITS Trunk Port - NRC - Subsequent Channel Activation/Chan - 2-Way Trunk			UEPDC	UDTTA		14.06	14.06				15.20				
	4-Wire DS1 Loop / 4-Wire DDITS Trunk Port - Subsequent Channel Activation/Chan - 1-Way Outward Trunk			UEPDC	UDTTB		14.06	14.06				15.20				
	4-Wire DS1 Loop / 4-Wire DDITS Trunk Port - Subsqnt Channel Activation/Chan Inward Trunk w/out DID			UEPDC	UDTTC		14.06	14.06				15.20				
	4-Wire DS1 Loop / 4-Wire DDITS Trunk Port - Subsqnt Chan Activation Per Chan - Inward Trunk with DID			UEPDC	UDTTD		14.06	14.06				15.20				
	4-Wire DS1 Loop / 4-Wire DDITS Trunk Port - Subsqnt Chan Activation / Chan - 2-Way DID w User Trans			UEPDC	UDTTE		14.06	14.06				15.20				
BIPOLAR 8 ZERO SUBSTITUTION																
	B8ZS -Superframe Format			UEPDC	CCOSF		0.00	605.00				15.20				
	B8ZS - Extended Superframe Format			UEPDC	CCOEF		0.00	605.00				15.20				
Alternate Mark Inversion																
	AMI -Superframe Format			UEPDC	MCOSF		0.00	0.00								
	AMI - Extended SuperFrame Format			UEPDC	MCOPO		0.00	0.00								
Telephone Number/Trunk Group Establisment Charges																
	Telephone Number for 2-Way Trunk Group			UEPDC	UDTGX	0.00						15.20				
	Telephone Number for 1-Way Outward Trunk Group			UEPDC	UDTGY	0.00						15.20				
	Telephone Number for 1-Way Inward Trunk Group Without DID			UEPDC	UDTGZ	0.00						15.20				
	DID Numbers for each Group of 20 DID Numbers			UEPDC	ND4	0.00						15.20				
	DID Numbers, Non- consecutive DID Numbers , Per Number			UEPDC	ND5	0.00						15.20				
	Reserve Non-Consecutive DID Nos.			UEPDC	ND6	0.00	0.00	0.00				15.20				
	Reserve DID Numbers			UEPDC	NDV	0.00	0.00	0.00				15.20				
Dedicated DS1 (Interoffice Channel Mileage) - FX/FCO for 4-Wire DS1 Digital Loop with 4-Wire DDITS Trunk Port																
	Interoffice Channel Mileage - Fixed rate 0-8 miles (Facilities Termination)			UEPDC	1LNO1	70.47	86.69	79.44				15.20				
	Interoffice Channel Mileage - Additional rate per mile - 0-8 miles			UEPDC	1LNOA	0.2652	0.00	0.00								
	Interoffice Channel Mileage - Fixed rate 9-25 miles (Facilities Termination)			UEPDC	1LNO2	0.00	0.00	0.00								
	Interoffice Channel Mileage - Additional rate per mile - 9-25 miles			UEPDC	1LNOB	0.2652	0.00	0.00								
	Interoffice Channel Mileage - Fixed rate 25+ miles (Facilities Termination)			UEPDC	1LNO3	0.00	0.00	0.00	0.00							
	Interoffice Channel Mileage - Additional rate per mile - 25+ miles			UEPDC	1LNOC	0.2652	0.00	0.00								
	Local Number Portability, per DS0 Activated			UEPDC	LNPCP	3.15	0.00	0.00	0.00							
	Central Office Termininating Point			UEPDC	CTG	0.00										
4-WIRE DS1 LOOP WITH CHANNELIZATION WITH PORT																
System is 1 DS1 Loop, 1 D4 Channel Bank, and up to 24 Feature Activations																

UNBUNDLED NETWORK ELEMENTS - Louisiana													Attachment: 2		Exhibit: B	
CATEGORY	RATE ELEMENTS	Interim	Zone	BCS	USOC	RATES ($)					Svc Order Submitted Elec per LSR	Svc Order Submitted Manually per LSR	Incremental Charge - Manual Svc Order vs. Electronic-1st	Incremental Charge - Manual Svc Order vs. Electronic-Add'l	Incremental Charge - Manual Svc Order vs. Electronic-Disc 1st	Incremental Charge - Manual Svc Order vs. Electronic-Disc Add'l
						Rec	Nonrecurring		Nonrecurring Disconnect		OSS Rates($)					
							First	Add'l	First	Add'l	SOMEC	SOMAN	SOMAN	SOMAN	SOMAN	SOMAN
	Each System can have up to 24 combinations of rates depending on type and number of ports used															
	UNE DS1 Loop															
	4-Wire DS1 Loop - UNE Zone 1		1	UEPMG	USLDC	85.70	0.00	0.00				15.20				
	4-Wire DS1 Loop - UNE Zone 2		2	UEPMG	USLDC	194.96	0.00	0.00				15.20				
	4-Wire DS1 Loop - UNE Zone 3		3	UEPMG	USLDC	491.94	0.00	0.00				15.20				
	UNE DSO Channelization Capacities (D4 Channel Bank Configurations)															
	24 DSO Channel Capacity - 1 per DS1			UEPMG	VUM24	97.35	0.00	0.00				15.20				
	48 DSO Channel Capacity - 1 per 2 DS1s			UEPMG	VUM48	194.70	0.00	0.00				15.20				
	96 DSO Channel Capacity -1per 4 DS1s			UEPMG	VUM96	389.40	0.00	0.00				15.20				
	144 DS0 Channel Capacity - 1 per 6 DS1s			UEPMG	VUM14	584.10	0.00	0.00				15.20				
	192 DS0 Channel Capacity -1 per 8 DS1s			UEPMG	VUM19	778.80	0.00	0.00				15.20				
	240 DS0 Channel Capacity - 1 per 10 DS1s			UEPMG	VUM2O	973.50	0.00	0.00				15.20				
	288 DS0 Channel Capacity - 1 per 12 DS1s			UEPMG	VUM28	1,168.20	0.00	0.00				15.20				
	384 DS0 Channel Capacity - 1 per 16 DS1s			UEPMG	VUM38	1,557.60	0.00	0.00				15.20				
	480 DS0 Channel Capacity - 1 per 20 DS1s			UEPMG	VUM4O	1,947.00	0.00	0.00				15.20				
	576 DS0 Channel Capacity -1 per 24 DS1s			UEPMG	VUM57	2,336.40	0.00	0.00				15.20				
	672 DS0 Channel Capacity - 1 per 28 DS1s			UEPMG	VUM67	2,725.80	0.00	0.00				15.20				
	Non-Recurring Charges (NRC) Associated with 4-Wire DS1 Loop with Channeliztion with Port - Conversion Charge Based on a System															
	A Minimum System configuration is One (1) DS1, One (1) D4 Channel Bank, and Up To 24 DSO Ports with Feature Activations.															
	Multiples of this configuration functioning as one are considered Add'l after the minimum system configuration is counted.															
	NRC - Conversion (Currently Combined) with or without BellSouth Allowed Changes			UEPMG	USAC4	0.00	146.13	8.12				15.20				
	System Additions at End User Locations Where 4-Wire DS1 Loop with Channelization with Port Combination Currently Exists and															
	New (Not Currently Combined) in all states, except in Density Zone 1 of Top 8 MSA's															
	1 DS1/D4 Channel Bank - Additionally Add NRC for each Port and Assoc Fea Activation			UEPMG	VUMD4	0.00	715.54	467.54				15.20				
	Bipolar 8 Zero Substitution															
	Clear Channel Capability Format, superframe - Subsequent Activity Only			UEPMG	CCOSF	0.00	0.00	605.00				15.20				
	Clear Channel Capability Format - Extended Superframe - Subsequent Activity Only			UEPMG	CCOEF	0.00	0.00	605.00				15.20				
	Alternate Mark Inversion (AMI)															
	Superframe Format			UEPMG	MCOSF	0.00	0.00	0.00								
	Extended Superframe Format			UEPMG	MCOPO	0.00	0.00	0.00								
	Exchange Ports Associated with 4-Wire DS1 Loop with Channelization with Port															
	Exchange Ports															
	Line Side Combination Channelized PBX Trunk Port - Business			UEPPX	UEPCX	1.52	0.00	0.00	0.00	0.00		15.20				
	Line Side Outward Channelized PBX Trunk Port - Business			UEPPX	UEPOX	1.52	0.00	0.00	0.00	0.00		15.20				
	Line Side Inward Only Channelized PBX Trunk Port without DID			UEPPX	UEP1X	1.52	0.00	0.00	0.00	0.00		15.20				
	2-Wire Trunk Side Unbundled Channelized DID Trunk Port			UEPPX	UEPDM	8.29	0.00	0.00	0.00	0.00		15.20				
	Unbundled Exchange Ports, 2-Wire Channelized – Outdial – (AL, KY, LA, MS, & TN)(Conversion from Network Access Service)			UEPPX	UEPCY	1.52	0.00	0.00	0.00	0.00		15.20				
	Unbundled Exchange Ports, 2-Wire Channelized – Combination (AL, KY, LA, MS, & TN) (Conversion from Network Access Service)			UEPPX	UEPCT	1.52	0.00	0.00	0.00	0.00		15.20				
	Unbundled Exchange Ports, 2-Wire Channelized – Outdial – Louisiana Only – Calling Plan			UEPPX	UEPC2	1.52	0.00	0.00	0.00	0.00		15.20				
	Unbundled Exchange Ports, 2-Wire Channelized – Two Way - Louisiana Only – Calling Plan			UEPPX	UEPC3	1.52	0.00	0.00	0.00	0.00		15.20				
	Feature Activations - Unbundled Loop Concentration															
	Feature (Service) Activation for each Line Port Terminated in D4 Bank			UEPPX	1PQWM	0.6497	25.36	13.40				15.20				
	Feature (Service) Activation for each Trunk Port Terminated in D4 Bank			UEPPX	1PQWU	0.6497	78.05	18.40				15.20				
	Telephone Number/ Group Establishment Charges for DID Service															
	DID Trunk Termination (1 per Port)			UEPPX	NDT	0.00	0.00	0.00				15.20				

CATEGORY	RATE ELEMENTS	Interim	Zone	BCS	USOC	RATES ($)					Svc Order Submitted Elec per LSR	Svc Order Submitted Manually per LSR	Attachment: 2 Incremental Charge - Manual Svc Order vs. Electronic-1st	Attachment: 2 Incremental Charge - Manual Svc Order vs. Electronic-Add'l	Exhibit: B Incremental Charge - Manual Svc Order vs. Electronic-Disc 1st	Exhibit: B Incremental Charge - Manual Svc Order vs. Electronic-Disc Add'l
						Rec	Nonrecurring		Nonrecurring Disconnect		OSS Rates($)					
							First	Add'l	First	Add'l	SOMEC	SOMAN	SOMAN	SOMAN	SOMAN	SOMAN
	DID Numbers - groups of 20 - Valid all States			UEPPX	ND4	0.00	0.00	0.00				15.20				
	Non-Consecutive DID Numbers - per number			UEPPX	ND5	0.00	0.00	0.00				15.20				
	Reserve Non-Consecutive DID Numbers			UEPPX	ND6	0.00	0.00	0.00				15.20				
	Reserve DID Numbers			UEPPX	NDV	0.00	0.00	0.00				15.20				
Local Number Portability																
	Local Number Portability - 1 per port			UEPPX	LNPCP	3.15	0.00	0.00								
FEATURES - Vertical and Optional																
Local Switching Features Offered with Line Side Ports Only																
	All Features Available			UEPPX	UEPVF	0.00	0.00	0.00				15.20				
UNBUNDLED PORT LOOP COMBINATIONS - MARKET RATES																
Market Rates shall apply where BellSouth is not required to provide unbundled local switching or switch ports per FCC and/or State Commission rules.																
This includes:																
Unbundled port/loop combinations that are Currently Combined or Not Currently Combined in Zone 1 of the Top 8 MSAS in BellSouth's region for end users with 4 or more DS0 equivalent lines.																
The Top 8 MSAs in BellSouth's region are: FL (Orlando, Ft. Lauderdale, Miami); GA (Atlanta); LA (New Orleans); NC (Greensboro-Winston Salem-Highpoint/Charlotte-Gastonia-Rock Hill); TN (Nashville).																
BellSouth currently is developing the billing capability to mechanically bill the recurring and non-recurring Market Rates in this section except for nonrecurring charges for not currently combined in FL and NC. In the interim where BellSouth cannot bill Market Rates, BellSouth shall bill the rates in the Cost-Based section preceding in lieu of the Market Rates and reserves the right to true-up the billing difference.																
The Market Rate for unbundled ports includes all available features in all states.																
End Office and Tandem Switching Usage and Common Transport Usage rates in the Port section of this rate exhibit shall apply to all combinations of loop/port network elements except for UNE Coin Port/Loop Combinations which have a flat rate usage charge (USOC: URECU).																
For Not Currently Combined scenarios the Nonrecurring charges are listed in the First and Additional NRC columns for each Port USOC. For Currently Combined scenarios, the Nonrecurring charges are listed in the NRC - Currently Combined section. Additional NRCs may apply also and are categorized accordingly.																
2-WIRE VOICE GRADE LOOP WITH 2-WIRE LINE PORT (RES)																
UNE Port/Loop Combination Rates																
	2-Wire VG Loop/Port Combo - Zone 1		1			25.77										
	2-Wire VG Loop/Port Combo - Zone 2		2			36.39										
	2-Wire VG Loop/Port Combo - Zone 3		3			62.26										
UNE Loop Rates																
	2-Wire Voice Grade Loop (SL1) - Zone 1		1	UEPRX	UEPLX	11.77										
	2-Wire Voice Grade Loop (SL1) - Zone 2		2	UEPRX	UEPLX	22.39										
	2-Wire Voice Grade Loop (SL1) - Zone 3		3	UEPRX	UEPLX	48.26										
2-Wire Voice Grade Line Port (Res)																
	2-Wire voice unbundled port - residence			UEPRX	UEPRL	14.00	90.00	90.00				15.20				
	2-Wire voice unbundled port with Caller ID - res			UEPRX	UEPRC	14.00	90.00	90.00				15.20				
	2-Wire voice unbundled port outgoing only - res			UEPRX	UEPRO	14.00	90.00	90.00				15.20				
	2-Wire voice Grade unbundled Louisiana extended local dialing parity port with Caller ID - res			UEPRX	UEPAS	14.00	90.00	90.00				15.20				
	2-Wire voice unbundled Louisiana Area Plus with Caller ID - res (RUL)			UEPRX	UEPAG	14.00	90.00	90.00				15.20				
	2-Wire voice unbundled Louisiana Area Plus with Caller ID - res (AC7)			UEPRX	UEPAH	14.00	90.00	90.00				15.20				
	2-Wire voice unbundles res, low usage line port with Caller ID (LUM)			UEPRX	UEPAP	14.00	90.00	90.00				15.20				
	2-Wire voice unbundled Low Usage Line Port without Caller ID Capability			UEPRX	UEPRT	14.00	90.00	90.00				15.20				
	2-Wire voice unbundled Louisiana Area Plus Port without Caller ID Capability			UEPRX	UEPRQ	14.00	90.00	90.00				15.20				
LOCAL NUMBER PORTABILITY																
	Local Number Portability (1 per port)			UEPRX	LNPCX	0.35										
FEATURES																
	All Features Offered			UEPRX	UEPVF	0.00	0.00	0.00				15.20				
NONRECURRING CHARGES - CURRENTLY COMBINED																
	2-Wire Voice Grade Loop / Line Port Combination - Switch-as-is			UEPRX	USAC2		41.50	41.50				15.20				
	2-Wire Voice Grade Loop / Line Port Combination - Switch with change			UEPRX	USACC		41.50	41.50				15.20				
ADDITIONAL NRCs																
	NRC - 2-Wire Voice Grade Loop/Line Port Combination - Subsequent			UEPRX	USAS2		0.00	0.00				15.20				
2-WIRE VOICE GRADE LOOP WITH 2-WIRE LINE PORT (BUS)																

UNBUNDLED NETWORK ELEMENTS - Louisiana														Attachment: 2		Exhibit: B	
CATEGORY		RATE ELEMENTS	Interim	Zone	BCS	USOC	RATES ($)					Svc Order Submitted Elec per LSR	Svc Order Submitted Manually per LSR	Incremental Charge - Manual Svc Order vs. Electronic-1st	Incremental Charge - Manual Svc Order vs. Electronic-Add'l	Incremental Charge - Manual Svc Order vs. Electronic-Disc 1st	Incremental Charge - Manual Svc Order vs. Electronic-Disc Add'l
							Rec	Nonrecurring		Nonrecurring Disconnect		OSS Rates($)					
								First	Add'l	First	Add'l	SOMEC	SOMAN	SOMAN	SOMAN	SOMAN	SOMAN
	UNE Port/Loop Combination Rates																
		2-Wire VG Loop/Port Combo - Zone 1		1			25.77										
		2-Wire VG Loop/Port Combo - Zone 2		2			36.39										
		2-Wire VG Loop/Port Combo - Zone 3		3			62.26										
	UNE Loop Rates																
		2-Wire Voice Grade Loop (SL1) - Zone 1		1	UEPBX	UEPLX	11.77										
		2-Wire Voice Grade Loop (SL1) - Zone 2		2	UEPBX	UEPLX	22.39										
		2-Wire Voice Grade Loop (SL1) - Zone 3		3	UEPBX	UEPLX	48.26										
	2-Wire Voice Grade Line Port (Bus)																
		2-Wire voice unbundled port without Caller ID - bus			UEPBX	UEPBL	14.00	90.00	90.00				15.20				
		2-Wire voice unbundled port with Caller + E484 ID - bus			UEPBX	UEPBC	14.00	90.00	90.00				15.20				
		2-Wire voice unbundled port outgoing only - bus			UEPBX	UEPBO	14.00	90.00	90.00				15.20				
		2-Wire voice Grade unbundled Louisiana extended local dialing parity port with Caller ID - bus			UEPBX	UEPAX	14.00	90.00	90.00				15.20				
		2-Wire voice unbundled Louisiana Bus Area Calling Port with Caller ID (BUC)			UEPBX	UEPAA	14.00	90.00	90.00				15.20				
		2-Wire voice unbundled Incoming Only Port without Caller ID Capability			UEPBX	UEPBE	14.00	90.00	90.00				15.20				
		2-Wire Voice Unbundled Louisiana Business Dialing Plan without Caller ID			UEPBX	UEPWH	14.00	90.00	90.00				15.20				
		2-Wire voice unbundled Louisiana Business Area Calling Port without Caller ID Capability			UEPBX	UEPBA	14.00	90.00	90.00				15.20				
	LOCAL NUMBER PORTABILITY																
		Local Number Portability (1 per port)			UEPBX	LNPCX	0.35										
	NONRECURRING CHARGES - CURRENTLY COMBINED																
		2-Wire Voice Grade Loop / Line Port Combination - Switch-as-is			UEPBX	USAC2		41.50	41.50				15.20				
		2-Wire Voice Grade Loop / Line Port Combination - Switch with change			UEPBX	USACC		41.50	41.50				15.20				
	ADDITIONAL NRCs																
		NRC - 2-Wire Voice Grade Loop/Line Port Combination - Subsequent			UEPBX	USAS2		0.00	0.00				15.20				
	2-WIRE VOICE GRADE LOOP WITH 2-WIRE LINE PORT (RES - PBX)																
	UNE Port/Loop Combination Rates																
		2-Wire VG Loop/Port Combo - Zone 1		1			25.77										
		2-Wire VG Loop/Port Combo - Zone 2		2			36.39										
		2-Wire VG Loop/Port Combo - Zone 3		3			62.26										
	UNE Loop Rates																
		2-Wire Voice Grade Loop (SL1) - Zone 1		1	UEPRG	UEPLX	11.77										
		2-Wire Voice Grade Loop (SL1) - Zone 2		2	UEPRG	UEPLX	22.39										
		2-Wire Voice Grade Loop (SL1) - Zone 3		3	UEPRG	UEPLX	48.26										
	2-Wire Voice Grade Line Port Rates (RES - PBX)																
		2-Wire VG Unbundled Combination 2-Way PBX Trunk Port - Res			UEPRG	UEPRD	14.00	90.00	90.00				15.20				
	LOCAL NUMBER PORTABILITY																
		Local Number Portability (1 per port)			UEPRG	LNPCP	3.15										
	NONRECURRING CHARGES - CURRENTLY COMBINED																
		2-Wire Voice Grade Loop/ Line Port Combination - Switch-As-Is			UEPRG	USAC2		41.50	41.50				15.20				
		2-Wire Voice Grade Loop/ Line Port Combination - Switch with Change			UEPRG	USACC		41.50	41.50				15.20				
	ADDITIONAL NRCs																
		2 Wire Loop/Line Side Port Combination - Non feature - Subsequent Activity- Nonrecurring						0.00	0.00				15.20				
		PBX Subsequent Activity - Change/Rearrange Multiline Hunt Group						14.64	14.64				15.20				
	2-WIRE VOICE GRADE LOOP WITH 2-WIRE LINE PORT (BUS - PBX)																
	UNE Port/Loop Combination Rates																
		2-Wire VG Loop/Port Combo - Zone 1		1			25.77										

UNBUNDLED NETWORK ELEMENTS - Louisiana														Attachment: 2		Exhibit: B	
CATEGORY	RATE ELEMENTS	Interim	Zone	BCS	USOC	RATES ($)					Svc Order Submitted Elec per LSR	Svc Order Submitted Manually per LSR	Incremental Charge - Manual Svc Order vs. Electronic-1st	Incremental Charge - Manual Svc Order vs. Electronic-Add'l	Incremental Charge - Manual Svc Order vs. Electronic-Disc 1st	Incremental Charge - Manual Svc Order vs. Electronic-Disc Add'l
						Rec	Nonrecurring		Nonrecurring Disconnect		OSS Rates($)					
							First	Add'l	First	Add'l	SOMEC	SOMAN	SOMAN	SOMAN	SOMAN	SOMAN
	2-Wire VG Loop/Port Combo - Zone 2		2			36.39										
	2-Wire VG Loop/Port Combo - Zone 3		3			62.26										
UNE Loop Rates																
	2-Wire Voice Grade Loop (SL1) - Zone 1		1	UEPPX	UEPLX	11.77										
	2-Wire Voice Grade Loop (SL1) - Zone 2		2	UEPPX	UEPLX	22.39										
	2-Wire Voice Grade Loop (SL1) - Zone 3		3	UEPPX	UEPLX	48.26										
2-Wire Voice Grade Line Port Rates (BUS - PBX)																
	Line Side Unbundled Combination 2-Way PBX Trunk Port - Bus			UEPPX	UEPPC	14.00	90.00	90.00				15.20				
	Line Side Unbundled Outward PBX Trunk Port - Bus			UEPPX	UEPPO	14.00	90.00	90.00				15.20				
	Line Side Unbundled Incoming PBX Trunk Port - Bus			UEPPX	UEPP1	14.00	90.00	90.00				15.20				
	2-Wire Voice Unbundled 2-Way Combination PBX Louisiana Calling Port			UEPPX	UEPL2	14.00						15.20				
	2-Wire Voice Unbundled PBX LD Terminal Ports			UEPPX	UEPLD	14.00	90.00	90.00				15.20				
	2-Wire Voice Unbundled 2-Way Combination PBX Usage Port			UEPPX	UEPXA	14.00	90.00	90.00				15.20				
	2-Wire Voice Unbundled PBX Toll Terminal Hotel Ports			UEPPX	UEPXB	14.00	90.00	90.00				15.20				
	2-Wire Voice Unbundled PBX LD DDD Terminals Port			UEPPX	UEPXC	14.00	90.00	90.00				15.20				
	2-Wire Voice Unbundled PBX LD Terminal Switchboard Port			UEPPX	UEPXD	14.00	90.00	90.00				15.20				
	2-Wire Voice Unbundled PBX LD Terminal Switchboard IDD Capable Port			UEPPX	UEPXE	14.00	90.00	90.00				15.20				
	2-Wire Voice Unbundled 2-Way PBX Louisiana Local Optional Calling Port			UEPPX	UEPXK	14.00	90.00	90.00				15.20				
	2-Wire Voice Unbundled 2-Way PBX Hotel/Hospital Economy Administrative Calling Port			UEPPX	UEPXL	14.00	90.00	90.00				15.20				
	2-Wire Voice Unbundled 2-Way PBX Hotel/Hospital Economy Room Calling Port			UEPPX	UEPXM	14.00	90.00	90.00				15.20				
	2-Wire Voice Unbundled 1-Way Outgoing PBX Hotel/Hospital Discount Room Calling Port			UEPPX	UEPXO	14.00	90.00	90.00				15.20				
	2-Wire Voice Unbundled 1-Way Outgoing PBX Louisiana Local Discount Calling Port			UEPPX	UEPXP	14.00	90.00	90.00				15.20				
	2-Wire Voice Unbundled 1-Way Outgoing PBX Measured Port			UEPPX	UEPXS	14.00	90.00	90.00				15.20				
LOCAL NUMBER PORTABILITY																
	Local Number Portability (1 per port)			UEPPX	LNPCP	3.15	0.00	0.00								
FEATURES																
	All Features Offered			UEPPX	UEPVF	0.00	0.00	0.00				15.20				
NONRECURRING CHARGES - CURRENTLY COMBINED																
	2-Wire Voice Grade Loop/ Line Port Combination - Switch-As-Is			UEPPX	USAC2		41.50	41.50				15.20				
	2-Wire Voice Grade Loop/ Line Port Combination - Switch with Change			UEPPX	USACC		41.50	41.50				15.20				
ADDITIONAL NRCs																
	2-Wire Voice Grade Loop/ Line Port Combination - Subsequent			UEPPX	USAS2		0.00	0.00				15.20				
	2 Wire Loop/Line Side Port Combination - Non feature - Subsequent Activity- Nonrecurring						0.00	0.00				15.20				
	PBX Subsequent Activity - Change/Rearrange Multiline Hunt Group						14.64	14.64				15.20				
2-WIRE VOICE GRADE LOOP WITH 2-WIRE ANALOG LINE COIN PORT																
UNE Port/Loop Combination Rates																
	2-Wire VG Coin Port/Loop Combo – Zone 1		1			25.77										
	2-Wire VG Coin Port/Loop Combo – Zone 2		2			36.39										
	2-Wire VG Coin Port/Loop Combo – Zone 3		3			62.26										
UNE Loop Rates																
	2-Wire Voice Grade Loop (SL1) - Zone 1		1	UEPCO	UEPLX	11.77										
	2-Wire Voice Grade Loop (SL1) - Zone 2		2	UEPCO	UEPLX	22.39										
	2-Wire Voice Grade Loop (SL1) - Zone 3		3	UEPCO	UEPLX	48.26										
2-Wire Voice Grade Line Port Rates (Coin)																
	2-Wire Coin 2-Way without Operator Screening and without Blocking (AL, KY, LA, MS)			UEPCO	UEPRF	14.00	90.00	90.00				15.20				

UNBUNDLED NETWORK ELEMENTS - Louisiana														Attachment: 2		Exhibit: B	
CATEGORY		RATE ELEMENTS	Interim	Zone	BCS	USOC	RATES ($)					Svc Order Submitted Elec per LSR	Svc Order Submitted Manually per LSR	Incremental Charge - Manual Svc Order vs. Electronic-1st	Incremental Charge - Manual Svc Order vs. Electronic-Add'l	Incremental Charge - Manual Svc Order vs. Electronic-Disc 1st	Incremental Charge - Manual Svc Order vs. Electronic-Disc Add'l
							Rec	Nonrecurring		Nonrecurring Disconnect		OSS Rates($)					
								First	Add'l	First	Add'l	SOMEC	SOMAN	SOMAN	SOMAN	SOMAN	SOMAN
		2-Wire Coin 2-Way with Operator Screening and Blocking: 011, 900/976, 1+DDD (AL, KY, LA, MS, SC)			UEPCO	UEPRA	14.00	90.00	90.00				15.20				
		2-Wire Coin 2-Way with Operator Screening and 011 Blocking (AL, LA, MS)			UEPCO	UEPRB	14.00	90.00	90.00				15.20				
		2-Wire Coin 2-Way with Operator Screening & Blocking: 900/976, 1+DDD, 011+, & Local (AL, KY, LA, MS)			UEPCO	UEPCD	14.00	90.00	90.00				15.20				
		2-Wire Coin Outward without Blocking and without Operator Screening (KY, LA, MS)			UEPCO	UEPRN	14.00	90.00	90.00				15.20				
		2-Wire Coin Outward with Operator Screening and 011 Blocking (LA)			UEPCO	UEPLA	14.00	90.00	90.00				15.20				
		2-Wire Coin Outward with Operator Screening and Blocking: 011, 900/976, 1+DDD (AL, KY, LA, MS)			UEPCO	UEPRH	14.00	90.00	90.00				15.20				
		2-Wire Coin Outward Operator Screening & Blocking: 900/976, 1+DDD, 011+, & Local (AL, KY, LA, MS)			UEPCO	UEPCN	14.00	90.00	90.00				15.20				
	LOCAL NUMBER PORTABILITY																
		Local Number Portability (1 per port)			UEPCO	LNPCX	0.35										
	NONRECURRING CHARGES - CURRENTLY COMBINED																
		2-Wire Voice Grade Loop/ Line Port Combination - Switch-As-Is			UEPCO	USAC2		41.50	41.50				15.20				
		2-Wire Voice Grade Loop/ Line Port Combination - Switch with Change			UEPCO	USACC		41.50	41.50				15.20				
	ADDITIONAL NRCs																
		2-Wire Voice Grade Loop/ Line Port Combination - Subsequent			UEPCO	USAS2		0.00	0.00				15.20				
	2-WIRE VOICE LOOP/ 2WIRE VOICE GRADE IO TRANSPORT/ 2-WIRE LINE PORT (RES)																
	UNE Port/Loop Combination Rates																
		2-Wire VG Loop/IO Tranport/Port Combo - Zone 1		1			28.93										
		2-Wire VG Loop/IO Tranport/Port Combo - Zone 2		2			39.35										
		2-Wire VG Loop/IO Tranport/Port Combo - Zone 3		3			64.46										
	UNE Loop Rates																
		2-Wire Voice Grade Loop (SL2) - Zone 1		1	UEPFR	UECF2	14.93										
		2-Wire Voice Grade Loop (SL2) - Zone 2		2	UEPFR	UECF2	25.35										
		2-Wire Voice Grade Loop (SL2) - Zone 3		3	UEPFR	UECF2	50.46										
	2-Wire Voice Grade Line Port Rates (Res)																
		2-Wire voice unbundled port - residence			UEPFR	UEPRL	14.00	135.00	90.00				15.20				
		2-Wire voice unbundled port with Caller ID - res			UEPFR	UEPRC	14.00	135.00	90.00				15.20				
		2-Wire voice unbundled port outgoing only - res			UEPFR	UEPRO	14.00	135.00	90.00				15.20				
		2-Wire voice Grade unbundled Louisiana extended local dialing parity port with Caller ID - res			UEPFR	UEPAS	14.00	135.00	90.00				15.20				
		2-Wire voice unbundled Louisiana Area Plus with Caller ID - res (RUL)			UEPFR	UEPAG	14.00	135.00	90.00				15.20				
		2-Wire voice unbundles res, low usage line port with Caller ID (LUM)			UEPFR	UEPAP	14.00	135.00	90.00				15.20				
		2-Wire Voice Unbundled Louisiana Residence Dialing Plan without Caller ID			UEPFR	UEPWG	14.00	135.00	90.00				15.20				
	INTEROFFICE TRANSPORT																
		Interoffice Transport - Dedicated - 2 Wire Voice Grade - Facility Termination			UEPFR	U1TV2	22.60	39.36	26.62				15.20				
		Interoffice Transport - Dedicated - 2 Wire Voice Grade - Per Mile or Fraction Mile			UEPFR	1L5XX	0.013										
	FEATURES																
		All Features Offered			UEPFR	UEPVF	0.00	0.00	0.00				15.20				
	LOCAL NUMBER PORTABILITY																
		Local Number Portability (1 per port)			UEPFR	LNPCX	0.35										
	NONRECURRING CHARGES (NRCs) - CURRENTLY COMBINED																
		2-Wire Loop / Dedicated IO Transport / 2 Wire Line Port Combination - Conversion - Switch-as-is			UEPFR	USAC2		8.24	1.81				15.20				
		2-Wire Loop / Dedicated IO Transport / 2 Wire Line Port Combination - Conversion - Switch-With-Change			UEPFR	USACC		8.24	1.81				15.20				

UNBUNDLED NETWORK ELEMENTS - Louisiana													Attachment: 2		Exhibit: B	
CATEGORY	RATE ELEMENTS	Interim	Zone	BCS	USOC	RATES ($)					Svc Order Submitted Elec per LSR	Svc Order Submitted Manually per LSR	Incremental Charge - Manual Svc Order vs. Electronic-1st	Incremental Charge - Manual Svc Order vs. Electronic-Add'l	Incremental Charge - Manual Svc Order vs. Electronic-Disc 1st	Incremental Charge - Manual Svc Order vs. Electronic-Disc Add'l
						Rec	Nonrecurring		Nonrecurring Disconnect		OSS Rates($)					
							First	Add'l	First	Add'l	SOMEC	SOMAN	SOMAN	SOMAN	SOMAN	SOMAN
2-WIRE VOICE LOOP/ 2WIRE VOICE GRADE IO TRANSPORT/ 2-WIRE LINE PORT (BUS)																
UNE Port/Loop Combination Rates																
	2-Wire VG Loop/IO Tranport/Port Combo - Zone 1		1			28.93										
	2-Wire VG Loop/IO Tranport/Port Combo - Zone 2		2			39.35										
	2-Wire VG Loop/IO Tranport/Port Combo - Zone 3		3			64.46										
UNE Loop Rates																
	2-Wire Voice Grade Loop (SL2) - Zone 1		1	UEPFB	UECF2	14.93										
	2-Wire Voice Grade Loop (SL2) - Zone 2		2	UEPFB	UECF2	25.35										
	2-Wire Voice Grade Loop (SL2) - Zone 3		3	UEPFB	UECF2	50.46										
2-Wire Voice Grade Line Port (Bus)																
	2-Wire voice unbundled port without Caller ID - bus			UEPFB	UEPBL	14.00	135.00	90.00				15.20				
	2-Wire voice unbundled port with Caller + E484 ID - bus			UEPFB	UEPBC	14.00	135.00	90.00				15.20				
	2-Wire voice unbundled port outgoing only - bus			UEPFB	UEPBO	14.00	135.00	90.00				15.20				
	2-Wire voice Grade unbundled Alabama extended local dialing parity port with Caller ID - bus			UEPFB	UEPAW											
	2-Wire voice Grade unbundled Louisiana extended local dialing parity port with Caller ID - bus			UEPFB	UEPAX	14.00	135.00	90.00				15.20				
	2-Wire voice unbundled incoming only port with Caller ID - Bus			UEPFB	UEPB1	14.00	135.00	90.00				15.20				
	2-Wire voice unbundled Louisiana Bus Area Calling Port with Caller ID (BUC)			UEPFB	UEPAA	14.00	135.00	90.00				15.20				
	2-Wire Voice Unbundled Louisiana Business Dialing Plan without Caller ID			UEPFB	UEPWH	14.00	135.00	90.00				15.20				
LOCAL NUMBER PORTABILITY																
	Local Number Portability (1 per port)			UEPFB	LNPCX	0.35										
INTEROFFICE TRANSPORT																
	Interoffice Transport - Dedicated - 2 Wire Voice Grade - Facility Termination			UEPFB	U1TV2	22.60	39.36	26.62				15.20				
	Interoffice Transport - Dedicated - 2 Wire Voice Grade - Per Mile or Fraction Mile			UEPFB	1L5XX	0.013										
FEATURES																
	All Features Offered			UEPFB	UEPVF	0.00	0.00	0.00				15.20				
NONRECURRING CHARGES (NRCs) - CURRENTLY COMBINED																
	2-Wire Loop / Dedicated IO Transport / 2 Wire Line Port Combination - Conversion - Switch-as-is			UEPFB	USAC2		8.24	1.81				15.20				
	2-Wire Loop / Dedicated IO Transport / 2 Wire Line Port Combination - Conversion - Switch with change			UEPFB	USACC		8.24	1.81				15.20				
2-WIRE VOICE GRADE LOOP WITH 2-WIRE LINE PORT (BUS - PBX)																
UNE Port/Loop Combination Rates																
	2-Wire VG Loop/IO Tranport/Port Combo - Zone 1		1			28.93										
	2-Wire VG Loop/IO Tranport/Port Combo - Zone 2		2			39.35										
	2-Wire VG Loop/IO Tranport/Port Combo - Zone 3		3			64.46										
UNE Loop Rates																
	2-Wire Voice Grade Loop (SL2) - Zone 1		1	UEPFP	UECF2	14.93										
	2-Wire Voice Grade Loop (SL2) - Zone 2		2	UEPFP	UECF2	25.35										
	2-Wire Voice Grade Loop (SL2) - Zone 3		3	UEPFP	UECF2	50.46										
2-Wire Voice Grade Line Port Rates (BUS - PBX)																
	Line Side Unbundled Combination 2-Way PBX Trunk Port - Bus			UEPFP	UEPPC	14.00	132.47	82.14				15.20				
	Line Side Unbundled Outward PBX Trunk Port - Bus			UEPFP	UEPPO	14.00	132.47	82.14				15.20				
	Line Side Unbundled Incoming PBX Trunk Port - Bus			UEPFP	UEPP1	14.00	132.47	82.14				15.20				
	2-Wire Voice Unbundled 2-Way Combination PBX Louisiana Calling Port			UEPFP	UEPL2	14.00	132.47	82.14				15.20				
	2-Wire Voice Unbundled PBX LD Terminal Ports			UEPFP	UEPLD	14.00	132.47	82.14				15.20				
	2-Wire Voice Unbundled 2-Way Combination PBX Usage Port			UEPFP	UEPXA	14.00	132.47	82.14				15.20				
	2-Wire Voice Unbundled PBX Toll Terminal Hotel Ports			UEPFP	UEPXB	14.00	132.47	82.14				15.20				
	2-Wire Voice Unbundled PBX LD DDD Terminals Port			UEPFP	UEPXC	14.00	132.47	82.14				15.20				
	2-Wire Voice Unbundled PBX LD Terminal Switchboard Port			UEPFP	UEPXD	14.00	132.47	82.14				15.20				
	2-Wire Voice Unbundled PBX LD Terminal Switchboard IDD Capable Port			UEPFP	UEPXE	14.00	132.47	82.14				15.20				

CATEGORY	RATE ELEMENTS	Interim	Zone	BCS	USOC	RATES ($) Rec	Nonrecurring First	Nonrecurring Add'l	Nonrecurring Disconnect First	Nonrecurring Disconnect Add'l	Svc Order Submitted Elec per LSR	Svc Order Submitted Manually per LSR	Attachment: 2 Incremental Charge - Manual Svc Order vs. Electronic- 1st	Attachment: 2 Incremental Charge - Manual Svc Order vs. Electronic- Add'l	Exhibit: B Incremental Charge - Manual Svc Order vs. Electronic- Disc 1st	Exhibit: B Incremental Charge - Manual Svc Order vs. Electronic- Disc Add'l
											OSS Rates($)					
											SOMEC	SOMAN	SOMAN	SOMAN	SOMAN	SOMAN
	2-Wire Voice Unbundled 2-Way PBX Louisiana Local Optional Calling Port			UEPFP	UEPXK	14.00	132.47	82.14				15.20				
	2-Wire Voice Unbundled 2-Way PBX Hotel/Hospital Economy Administrative Calling Port			UEPFP	UEPXL	14.00	132.47	82.14				15.20				
	2-Wire Voice Unbundled 2-Way PBX Hotel/Hospital Economy Room Calling Port			UEPFP	UEPXM	14.00	132.47	82.14				15.20				
	2-Wire Voice Unbundled 1-Way Outgoing PBX Hotel/Hospital Discount Room Calling Port			UEPFP	UEPXO	14.00	132.47	82.14				15.20				
	2-Wire Voice Unbundled 1-Way Outgoing PBX Louisiana Local Discount Calling Port			UEPFP	UEPXP	14.00	132.47	82.14				15.20				
	2-Wire Voice Unbundled 1-Way Outgoing PBX Measured Port			UEPFP	UEPXS	14.00	132.47	82.14				15.20				
LOCAL NUMBER PORTABILITY																
	Local Number Portability (1 per port)			UEPFP	LNPCP	3.15	0.00	0.00				15.20				
INTEROFFICE TRANSPORT																
	Interoffice Transport - Dedicated - 2 Wire Voice Grade - Facility Termination			UEPFP	U1TV2	22.60	39.36	26.62				15.20				
	Interoffice Transport - Dedicated - 2 Wire Voice Grade - Per Mile or Fraction Mile			UEPFP	1L5XX	0.013										
FEATURES																
	All Features Offered			UEPFP	UEPVF	0.00	0.00	0.00				15.20				
NONRECURRING CHARGES (NRCs) - CURRENTLY COMBINED																
	2-Wire Loop / Dedicated IO Transport / 2 Wire Line Port Combination - Conversion - Switch-as-is			UEPFP	USAC2		8.24	1.81				15.20				
	2-Wire Loop / Dedicated IO Transport / 2 Wire Line Port Combination - Conversion - Switch with change			UEPFP	USACC		8.24	1.81				15.20				
UNBUNDLED PORT/LOOP COMBINATIONS - MARKET BASED RATES																
2-WIRE VOICE GRADE LOOP- BUS ONLY - WITH 2-WIRE DID TRUNK PORT																
UNE Port/Loop Combination Rates																
	2-Wire VG Loop/2-Wire DID Trunk Port Combo - UNE Zone 1		1			50.93										
	2-Wire VG Loop/2-Wire DID Trunk Port Combo - UNE Zone 2		2			61.35										
	2-Wire VG Loop/2-Wire DID Trunk Port Combo - UNE Zone 3		3			86.46										
UNE Loop Rates																
	2-Wire Analog Voice Grade Loop - (SL2) - UNE Zone 1		1	UEPPX	UECD1	14.93						15.20				
	2-Wire Analog Voice Grade Loop - (SL2) - UNE Zone 2		2	UEPPX	UECD1	25.35						15.20				
	2-Wire Analog Voice Grade Loop - (SL2) - UNE Zone 3		3	UEPPX	UECD1	50.46						15.20				
UNE Port Rate																
	Exchange Ports - 2-Wire DID Port			UEPPX	UEPD1	36.00	600.00	45.00				15.20				
NONRECURRING CHARGES - CURRENTLY COMBINED																
	2-Wire Voice Grade Loop / 2-Wire DID Trunk Port Combination - Switch-As-Is Top 8 MSAs only			UEPPX	USAC1		100.00	42.50				15.20				
	2-Wire Voice Grade Loop / 2-Wire DID Trunk Port Conversion with BellSouth Allowable Changes Top 8 MSAs only			UEPPX	USA1C		100.00	42.50				15.20				
ADDITIONAL NRCs																
	2-Wire DID Subsequent Activity - Add Trunks, Per Trunk			UEPPX	USAS1		45.00	45.00				15.20				
Telephone Number/Trunk Group Establisment Charges																
	DID Trunk Termination (One Per Port)			UEPPX	NDT	0.00	0.00	0.00				15.20				
	Additional DID Numbers for each Group of 20 DID Numbers			UEPPX	ND4	0.00	0.00	0.00				15.20				
	DID Numbers, Non- consecutive DID Numbers , Per Number			UEPPX	ND5	0.00	0.00	0.00				15.20				
	Reserve Non-Consecutive DID numbers			UEPPX	ND6	0.00	0.00	0.00				15.20				
	Reserve DID Numbers			UEPPX	NDV	0.00	0.00	0.00				15.20				
LOCAL NUMBER PORTABILITY																
	Local Number Portability (1 per port)			UEPPX	LNPCP	3.15	0.00	0.00								
2-WIRE ISDN DIGITAL GRADE LOOP WITH 2-WIRE ISDN DIGITAL LINE SIDE PORT																
UNE Port/Loop Combination Rates																
	2W ISDN Digital Grade Loop/2W ISDN Digital Line Side Port - UNE Zone 1		1	UEPPB UEPPR		84.09										
	2W ISDN Digital Grade Loop/2W ISDN Digital Line Side Port - UNE Zone 2		2	UEPPB UEPPR		96.95										

UNBUNDLED NETWORK ELEMENTS - Louisiana														Attachment: 2		Exhibit: B	
CATEGORY	RATE ELEMENTS	Interim	Zone	BCS		USOC	RATES ($)					Svc Order Submitted Elec per LSR	Svc Order Submitted Manually per LSR	Incremental Charge - Manual Svc Order vs. Electronic-1st	Incremental Charge - Manual Svc Order vs. Electronic-Add'l	Incremental Charge - Manual Svc Order vs. Electronic-Disc 1st	Incremental Charge - Manual Svc Order vs. Electronic-Disc Add'l
							Rec	Nonrecurring		Nonrecurring Disconnect		OSS Rates($)					
								First	Add'l	First	Add'l	SOMEC	SOMAN	SOMAN	SOMAN	SOMAN	SOMAN
	2W ISDN Digital Grade Loop/2W ISDN Digital Line Side Port - UNE Zone 3		3	UEPPB	UEPPR		127.60										
UNE Loop Rates																	
	2-Wire ISDN Digital Grade Loop - UNE Zone 1		1	UEPPB	UEPPR	USL2X	19.09						15.20				
	2-Wire ISDN Digital Grade Loop - UNE Zone 2		2	UEPPB	UEPPR	USL2X	31.95						15.20				
	2-Wire ISDN Digital Grade Loop - UNE Zone 3		3	UEPPB	UEPPR	USL2X	62.60						15.20				
UNE Port Rate																	
	Exchange Port - 2-Wire ISDN Line Side Port			UEPPB	UEPPR	UEPPB	65.00	525.00	400.00				15.20				
NONRECURRING CHARGES - CURRENTLY COMBINED																	
	2-Wire ISDN Digital Grade Loop / 2-Wire ISDN Line Side Port Combination - Conversion - Top 8 MSAs only			UEPPB	UEPPR	USACB	0.00	230.00	230.00				15.20				
ADDITIONAL NRCs																	
LOCAL NUMBER PORTABILITY																	
	Local Number Portability (1 per port)			UEPPB	UEPPR	LNPCX	0.35	0.00	0.00								
B-CHANNEL USER PROFILE ACCESS:																	
	CVS/CSD (DMS/5ESS)			UEPPB	UEPPR	U1UCA	0.00	0.00	0.00								
	CVS (EWSD)			UEPPB	UEPPR	U1UCB	0.00	0.00	0.00								
	CSD			UEPPB	UEPPR	U1UCC	0.00	0.00	0.00								
B-CHANNEL AREA PLUS USER PROFILE ACCESS: (AL,KY,LA,MS SC,MS, & TN)																	
	CVS/CSD (DMS/5ESS)			UEPPB	UEPPR	U1UCD	0.00	0.00	0.00								
	CVS (EWSD)			UEPPB	UEPPR	U1UCE	0.00	0.00	0.00								
	CSD			UEPPB	UEPPR	U1UCF	0.00	0.00	0.00								
USER TERMINAL PROFILE																	
	User Terminal Profile (EWSD only)			UEPPB	UEPPR	U1UMA	0.00	0.00	0.00								
VERTICAL FEATURES																	
	All Vertical Features - One per Channel B User Profile			UEPPB	UEPPR	UEPVF	0.00	0.00	0.00				15.20				
INTEROFFICE CHANNEL MILEAGE																	
	Interoffice Channel mileage each, including first mile and facilities termination			UEPPB	UEPPR	M1GNC	22.613	39.36	26.62				15.20				
	Interoffice Channel mileage each, additional mile			UEPPB	UEPPR	M1GNM	0.013	0.00	0.00				15.20				
4-WIRE DS1 DIGITAL LOOP WITH 4-WIRE ISDN DS1 DIGITAL TRUNK PORT																	
UNE Port/Loop Combination Rates																	
	4W DS1 Digital Loop/4W ISDN DS1 Digital Trunk Port - UNE Zone 1		1	UEPPP			935.70										
	4W DS1 Digital Loop/4W ISDN DS1 Digital Trunk Port - UNE Zone 2		2	UEPPP			1,044.96										
	4W DS1 Digital Loop/4W ISDN DS1 Digital Trunk Port - UNE Zone 3		3	UEPPP			1,341.94										
UNE Loop Rates																	
	4-Wire DS1 Digital Loop - UNE Zone 1		1	UEPPP		USL4P	85.70						15.20				
	4-Wire DS1 Digital Loop - UNE Zone 2		2	UEPPP		USL4P	194.96						15.20				
	4-Wire DS1 Digital Loop - UNE Zone 3		3	UEPPP		USL4P	491.94						15.20				
UNE Port Rate																	
	Exchange Ports - 4-Wire ISDN DS1 Port			UEPPP		UEPPP	850.00	1,150.00	1,150.00				15.20				
NONRECURRING CHARGES - CURRENTLY COMBINED																	
	4-Wire DS1 Digital Loop / 4-Wire ISDN DS1 Digital Trunk Port Combination - Conversion -Switch-As-Is Top 8 MSAs only			UEPPP		USACP	0.00	950.00	950.00				15.20				
ADDITIONAL NRCs																	
	4-Wire DS1 Loop/4-W ISDN Digtl Trk Port - Subsqt Actvy-Inward/two way Telephone Numbers (except NC)			UEPPP		PR7TF		0.48					15.20				
	4-Wire DS1 Loop / 4-Wire ISDN DS1 Digital Trunk Port - Outward Tel Numbers (All States except NC)			UEPPP		PR7TO		11.18	11.18				15.20				
	4-Wire DS1 Loop / 4-Wire ISDN DS1 Digital Trk Port - Subsequent Inward Telephone Numbers			UEPPP		PR7ZT		22.35	22.35				15.20				
LOCAL NUMBER PORTABILITY																	
	Local Number Portability (1 per port)			UEPPP		LNPCN	1.75										
INTERFACE (Provsioning Only)																	
	Voice/Data			UEPPP		PR71V	0.00	0.00	0.00								

CATEGORY	RATE ELEMENTS	Interim	Zone	BCS	USOC	RATES ($) Rec	Nonrecurring First	Nonrecurring Add'l	Nonrecurring Disconnect First	Nonrecurring Disconnect Add'l	Svc Order Submitted Elec per LSR	Svc Order Submitted Manually per LSR	Attachment: 2 Incremental Charge - Manual Svc Order vs. Electronic- 1st	Attachment: 2 Incremental Charge - Manual Svc Order vs. Electronic- Add'l	Exhibit: B Incremental Charge - Manual Svc Order vs. Electronic- Disc 1st	Exhibit: B Incremental Charge - Manual Svc Order vs. Electronic- Disc Add'l
											OSS Rates($)					
											SOMEC	SOMAN	SOMAN	SOMAN	SOMAN	SOMAN
	Digital Data			UEPPP	PR71D	0.00	0.00	0.00								
	Inward Data			UEPPP	PR71E	0.00	0.00	0.00								
New or Additional "B" Channel																
	New or Additional - Voice/Data B Channel			UEPPP	PR7BV	0.00	14.11					15.20				
	New or Additional - Digital Data B Channel			UEPPP	PR7BF	0.00	14.11					15.20				
	New or Additional Inward Data B Channel			UEPPP	PR7BD	0.00	14.11					15.20				
CALL TYPES																
	Inward			UEPPP	PR7C1	0.00	0.00	0.00								
	Outward			UEPPP	PR7CO	0.00	0.00	0.00								
	Two-way			UEPPP	PR7CC	0.00	0.00	0.00								
Interoffice Channel Mileage																
	Fixed Each Including First Mile			UEPPP	1LN1A	70.7532	86.69	79.44				15.20				
	Each Airline-Fractional Additional Mile			UEPPP	1LN1B	0.2652										
4-WIRE DS1 DIGITAL LOOP WITH 4-WIRE DDITS TRUNK PORT																
UNE Port/Loop Combination Rates																
	4W DS1 Digital Loop/4W DDITS Trunk Port - UNE Zone 1		1	UEPDC		154.17						15.20				
	4W DS1 Digital Loop/4W DDITS Trunk Port - UNE Zone 2		2	UEPDC		263.43						15.20				
	4W DS1 Digital Loop/4W DDITS Trunk Port - UNE Zone 3		3	UEPDC		560.41						15.20				
UNE Loop Rates																
	4-Wire DS1 Digital Loop - UNE Zone 1		1	UEPDC	USLDC	85.70						15.20				
	4-Wire DS1 Digital Loop - UNE Zone 2		2	UEPDC	USLDC	194.96						15.20				
	4-Wire DS1 Digital Loop - UNE Zone 3		3	UEPDC	USLDC	491.94						15.20				
UNE Port Rate																
	4-Wire DDITS Digital Trunk Port			UEPDC	UDD1T	750.00	1,006.28	479.28	0.00	0.00		15.20				
NONRECURRING CHARGES - CURRENTLY COMBINED																
	4-Wire DS1 Digital Loop / 4-Wire DDITS Trunk Port Combination - Switch-As-Is Top 8 MSAs only			UEPDC	USAC4		125.75	65.08				15.20				
	4-Wire DS1 Digital Loop / 4-Wire DDITS Trunk Port Combination - Conversion with DS1 Changes Top 8 MSAs only			UEPDC	USAWA		125.75	65.08				15.20				
	4-Wire DS1 Digital Loop / 4-Wire DDITS Trunk Port Combination - Conversion with Change - Trunk Top 8 MSAs only			UEPDC	USAWB		125.75	65.08				15.20				
ADDITIONAL NRCs																
	4-Wire DS1 Loop / 4-Wire DDITS Trunk Port - NRC - Subsequent Channel Activation/Chan - 2-Way Trunk			UEPDC	UDTTA		14.06	14.06				15.20				
	4-Wire DS1 Loop / 4-Wire DDITS Trunk Port - Subsequent Channel Activation/Chan - 1-Way Outward Trunk			UEPDC	UDTTB		14.06	14.06				15.20				
	4-Wire DS1 Loop / 4-Wire DDITS Trunk Port - Subsqnt Channel Activation/Chan Inward Trunk w/out DID			UEPDC	UDTTC		14.06	14.06				15.20				
	4-Wire DS1 Loop / 4-Wire DDITS Trunk Port - Subsqnt Chan Activation Per Chan - Inward Trunk with DID			UEPDC	UDTTD		14.06	14.06				15.20				
	4-Wire DS1 Loop / 4-Wire DDITS Trunk Port - Subsqnt Chan Activation / Chan - 2-Way DID w User Trans			UEPDC	UDTTE		14.06	14.06				15.20				
BIPOLAR 8 ZERO SUBSTITUTION																
	B8ZS -Superframe Format			UEPDC	CCOSF		0.00	605.00				15.20				
	B8ZS - Extended Superframe Format			UEPDC	CCOEF		0.00	605.00				15.20				
Alternate Mark Inversion																
	AMI -Superframe Format			UEPDC	MCOSF		0.00	0.00								
	AMI - Extended SuperFrame Format			UEPDC	MCOPO		0.00	0.00								
Telephone Number/Trunk Group Establisment Charges																
	Telephone Number for 2-Way Trunk Group			UEPDC	UDTGX	0.00						15.20				
	Telephone Number for 1-Way Outward Trunk Group			UEPDC	UDTGY	0.00						15.20				
	Telephone Number for 1-Way Inward Trunk Group Without DID			UEPDC	UDTGZ	0.00						15.20				
	DID Numbers, Establish Trunk Group and Provide First Group of 20 DID Numbers			UEPDC	NDZ	0.00	0.00	0.00				15.20				
	DID Numbers for each Group of 20 DID Numbers			UEPDC	ND4	0.00						15.20				
	DID Numbers, Non- consecutive DID Numbers , Per Number			UEPDC	ND5	0.00						15.20				
	Reserve Non-Consecutive DID Nos.			UEPDC	ND6	0.00	0.00	0.00				15.20				

UNBUNDLED NETWORK ELEMENTS - Louisiana													Attachment: 2		Exhibit: B	
CATEGORY	RATE ELEMENTS	Interim	Zone	BCS	USOC	RATES ($)					Svc Order Submitted Elec per LSR	Svc Order Submitted Manually per LSR	Incremental Charge - Manual Svc Order vs. Electronic-1st	Incremental Charge - Manual Svc Order vs. Electronic-Add'l	Incremental Charge - Manual Svc Order vs. Electronic-Disc 1st	Incremental Charge - Manual Svc Order vs. Electronic-Disc Add'l
						Rec	Nonrecurring		Nonrecurring Disconnect		OSS Rates($)					
							First	Add'l	First	Add'l	SOMEC	SOMAN	SOMAN	SOMAN	SOMAN	SOMAN
	Reserve DID Numbers			UEPDC	NDV	0.00	0.00	0.00				15.20				
Dedicated DS1 (Interoffice Channel Mileage) -																
FX/FCO for 4-Wire DS1 Digital Loop with 4-Wire DDITS Trunk Port																
	Interoffice Channel Mileage - Fixed rate 0-8 miles (Facilities Termination)			UEPDC	1LNO1	70.47	86.69	79.44				15.20				
	Interoffice Channel Mileage - Additional rate per mile - 0-8 miles			UEPDC	1LNOA	0.2652	0.00	0.00								
	Interoffice Channel Mileage - Fixed rate 9-25 miles (Facilities Termination)			UEPDC	1LNO2	0.00	0.00	0.00								
	Interoffice Channel Mileage - Additional rate per mile - 9-25 miles			UEPDC	1LNOB	0.2652	0.00	0.00								
	Interoffice Channel Mileage - Fixed rate 25+ miles (Facilities Termination)			UEPDC	1LNO3	0.00	0.00	0.00								
	Interoffice Channel Mileage - Additional rate per mile - 25+ miles			UEPDC	1LNOC	0.2652	0.00	0.00								
	Local Number Portability, per DS0 Activated			UEPDC	LNPCP	3.15	0.00	0.00								
	Central Office Termininating Point			UEPDC	CTG	0.00										
4-WIRE DS1 LOOP WITH CHANNELIZATION WITH PORT																
System is 1 DS1 Loop, 1 D4 Channel Bank, and up to 24 Feature Activations																
A system can have various rate combinations based on type and number of ports used																
UNE DS1 Loop																
	4-Wire DS1 Loop - UNE Zone 1		1	UEPMG	USLDC	85.70	0.00	0.00				15.20				
	4-Wire DS1 Loop - UNE Zone 2		2	UEPMG	USLDC	194.96	0.00	0.00				15.20				
	4-Wire DS1 Loop - UNE Zone 3		3	UEPMG	USLDC	491.94	0.00	0.00				15.20				
UNE DSO Channelization Capacities (D4 Channel Bank Configurations)																
	24 DSO Channel Capacity - 1 per DS1			UEPMG	VUM24	97.35	0.00	0.00				15.20				
	48 DSO Channel Capacity - 1 per 2 DS1s			UEPMG	VUM48	194.70	0.00	0.00				15.20				
	96 DSO Channel Capacity -1per 4 DS1s			UEPMG	VUM96	389.40	0.00	0.00				15.20				
	144 DS0 Channel Capacity - 1 per 6 DS1s			UEPMG	VUM14	584.10	0.00	0.00				15.20				
	192 DS0 Channel Capacity -1 per 8 DS1s			UEPMG	VUM19	778.80	0.00	0.00				15.20				
	240 DS0 Channel Capacity - 1 per 10 DS1s			UEPMG	VUM2O	973.50	0.00	0.00				15.20				
	288 DS0 Channel Capacity - 1 per 12 DS1s			UEPMG	VUM28	1,168.20	0.00	0.00				15.20				
	384 DS0 Channel Capacity - 1 per 16 DS1s			UEPMG	VUM38	1,557.60	0.00	0.00				15.20				
	480 DS0 Channel Capacity - 1 per 20 DS1s			UEPMG	VUM4O	1,947.00	0.00	0.00				15.20				
	576 DS0 Channel Capacity -1 per 24 DS1s			UEPMG	VUM57	2,336.40	0.00	0.00				15.20				
	672 DS0 Channel Capacity - 1 per 28 DS1s			UEPMG	VUM67	2,725.80	0.00	0.00				15.20				
Non-Recurring Charges (NRC) Associated with 4-Wire DS1 Loop with Channeliztion with Port - Conversion Charge Based on a System																
A Minimum System configuration is One (1) DS1, One (1) D4 Channel Bank, and Up To 24 DSO Ports with Feature Activations.																
Multiples of this configuration functioning as one are considered Add'l after the minimum system configuration is counted.																
	NRC - Conversion (Currently Combined) with or without BellSouth Allowed Changes - Top 8 MSAs Only			UEPMG	USAC4	0.00	450.00	50.00				15.20				
System Additions Where Currently Combined and New (Not Currently Combined)																
In Density Zone 1 Top 8 MSAs																
	1 DS1/D4 Channel Bank - Add NRC for each Port and Assoc Fea Activation -			UEPMG	VUMD4	0.00	900.00	600.00				15.20				
Bipolar 8 Zero Substitution																
	Clear Channel Capability Format, superframe - Subsequent Activity Only			UEPMG	CCOSF	0.00	0.00	605.00				15.20				
	Clear Channel Capability Format - Extended Superframe - Subsequent Activity Only			UEPMG	CCOEF	0.00	0.00	605.00				15.20				
Alternate Mark Inversion (AMI)																
	Superframe Format			UEPMG	MCOSF	0.00	0.00	0.00								
	Extended Superframe Format			UEPMG	MCOPO	0.00	0.00	0.00								
Exchange Ports Associated with 4-Wire DS1 Loop with Channelization with Port																
Exchange Ports																
	Line Side Combination Channelized PBX Trunk Port - Business			UEPPX	UEPCX	14.00	0.00	0.00				15.20				
	Line Side Outward Channelized PBX Trunk Port - Business			UEPPX	UEPOX	14.00	0.00	0.00				15.20				

UNBUNDLED NETWORK ELEMENTS - Louisiana													Attachment: 2		Exhibit: B	
CATEGORY	RATE ELEMENTS	Interim	Zone	BCS	USOC	RATES ($)					Svc Order Submitted Elec per LSR	Svc Order Submitted Manually per LSR	Incremental Charge - Manual Svc Order vs. Electronic-1st	Incremental Charge - Manual Svc Order vs. Electronic-Add'l	Incremental Charge - Manual Svc Order vs. Electronic-Disc 1st	Incremental Charge - Manual Svc Order vs. Electronic-Disc Add'l
						Rec	Nonrecurring		Nonrecurring Disconnect		OSS Rates($)					
							First	Add'l	First	Add'l	SOMEC	SOMAN	SOMAN	SOMAN	SOMAN	SOMAN
	Line Side Inward Only Channelized PBX Trunk Port without DID			UEPPX	UEP1X	14.00	0.00	0.00				15.20				
	2-Wire Trunk Side Unbundled Channelized DID Trunk Port			UEPPX	UEPDM	36.00	0.00	0.00				15.20				
	Unbundled Exchange Ports, 2-Wire Channelized – Outdial – (AL, KY, LA, MS, & TN)			UEPPX	UEPCY	14.00	0.00	0.00	0.00	0.00		15.20				
	Unbundled Exchange Ports, 2-Wire Channelized – Combination (AL, KY, LA, MS, & TN			UEPPX	UEPCT	14.00	0.00	0.00	0.00	0.00		15.20				
	Unbundled Exchange Ports, 2-Wire Channelized – Outdial – Louisiana Only – Calling Plan			UEPPX	UEPC2	14.00	0.00	0.00	0.00	0.00		15.20				
	Unbundled Exchange Ports, 2-Wire Channelized – Two Way - Louisiana Only – Calling Plan			UEPPX	UEPC3	14.00	0.00	0.00	0.00	0.00		15.20				
Feature Activations - Unbundled Loop Concentration																
	Feature (Service) Activation for each Line Port Terminated in D4 Bank			UEPPX	1PQWM	0.6497	40.00	20.00				15.20				
	Feature (Service) Activation for each Trunk Port Terminated in D4 Bank			UEPPX	1PQWU	0.6497	110.00	30.00				15.20				
Telephone Number/ Group Establishment Charges for DID Service																
	DID Trunk Termination (1 per Port)			UEPPX	NDT	0.00	0.00	0.00				15.20				
	DID Numbers - groups of 20 - Valid all States			UEPPX	ND4	0.00	0.00	0.00				15.20				
	Non-Consecutive DID Numbers - per number			UEPPX	ND5	0.00	0.00	0.00				15.20				
	Reserve Non-Consecutive DID Numbers			UEPPX	ND6	0.00	0.00	0.00				15.20				
	Reserve DID Numbers			UEPPX	NDV	0.00	0.00	0.00				15.20				
Local Number Portability																
	Local Number Portability - 1 per port			UEPPX	LNPCP	3.15	0.00	0.00								
FEATURES - Vertical and Optional																
Local Switching Features Offered with Line Side Ports Only																
	All Features Available			UEPPX	UEPVF	0.00	0.00	0.00				15.20				
UNBUNDLED CENTREX PORT/LOOP COMBINATIONS - COST BASED RATES																
1. Cost Based Rates are applied where BellSouth is required by FCC and/or State Commission rule to provide Unbundled Local Switching or Switch Ports.																
2. Features shall apply to the Unbundled Port/Loop Combination - Cost Based Rate section in the same manner as they are applied to the Stand-Alone Unbundled Port section of this Rate Exhibit.																
3. End Office and Tandem Switching Usage and Common Transport Usage rates in the Port section of this rate exhibit shall apply to all combinations of loop/port network elements except for UNE Coin Port/Loop Combinations.																
4. The first and additional Port nonrecurring charges apply to Not Currently Combined Combos. For Currently Combined Combos, the nonrecurring charges shall be those identified in the Nonrecurring - Currently Combined sections. Additional NRCs may apply also and are categorized accordingly.																
5. Market Rates for Unbundled Centrex Port/Loop Combination will be negotiated on an Individual Case Basis, until further notice.																
UNE-P CENTREX - 1AESS - (Valid in AL,FL,GA,KY,LA,MS,&TN only)																
2-Wire VG Loop/2-Wire Voice Grade Port (Centrex) Combo																
UNE Port/Loop Combination Rates (Non-Design)																
	2-Wire VG Loop/2-Wire Voice Grade Port (Centrex) Port Combo - Non-Design		1	UEP91		13.13										
	2-Wire VG Loop/2-Wire Voice Grade Port (Centrex)Port Combo - Non-Design		2	UEP91		23.75										
	2-Wire VG Loop/2-Wire Voice Grade Port (Centrex)Port Combo - Non-Design		3	UEP91		49.62										
UNE Port/Loop Combination Rates (Design)																
	2-Wire VG Loop/2-Wire Voice Grade Port (Centrex) Port Combo - Design		1	UEP91		16.29										
	2-Wire VG Loop/2-Wire Voice Grade Port (Centrex)Port Combo - Design		2	UEP91		26.71										
	2-Wire VG Loop/2-Wire Voice Grade Port (Centrex)Port Combo - Design		3	UEP91		48.26										
UNE Loop Rate																
	2-Wire Voice Grade Loop (SL 1) - Zone 1		1	UEP91	UECS1	11.77										
	2-Wire Voice Grade Loop (SL 1) - Zone 2		2	UEP91	UECS1	22.39										
	2-Wire Voice Grade Loop (SL 1) - Zone 3		3	UEP91	UECS1	48.26										
	2-Wire Voice Grade Loop (SL 2) - Zone 1		1	UEP91	UECS2	14.93										
	2-Wire Voice Grade Loop (SL 2) - Zone 2		2	UEP91	UECS2	25.35										
	2-Wire Voice Grade Loop (SL 2) - Zone 3		3	UEP91	UECS2	50.46										
UNE Ports																
All States (Except North Carolina and Sout Carolina)																

UNBUNDLED NETWORK ELEMENTS - Louisiana														Attachment: 2		Exhibit: B	
CATEGORY		RATE ELEMENTS	Interim	Zone	BCS	USOC	RATES ($)					Svc Order Submitted Elec per LSR	Svc Order Submitted Manually per LSR	Incremental Charge - Manual Svc Order vs. Electronic-1st	Incremental Charge - Manual Svc Order vs. Electronic-Add'l	Incremental Charge - Manual Svc Order vs. Electronic-Disc 1st	Incremental Charge - Manual Svc Order vs. Electronic-Disc Add'l
							Rec	Nonrecurring		Nonrecurring Disconnect		OSS Rates($)					
								First	Add'l	First	Add'l	SOMEC	SOMAN	SOMAN	SOMAN	SOMAN	SOMAN
		2-Wire Voice Grade Port (Centrex) Basic Local Area			UEP91	UEPYA	1.36	38.85	19.08				15.20				
		2-Wire Voice Grade Port (Centrex 800 termination)Basic Local Area			UEP91	UEPYB	1.36	38.85	19.08				15.20				
		2-Wire Voice Grade Port (Centrex with Caller ID)1Basic Local Area			UEP91	UEPYH	1.36	38.85	19.08				15.20				
		2-Wire Voice Grade Port (Centrex from diff Serving Wire Center)2 Basic Local Area			UEP91	UEPYM	1.36	104.41	67.93				15.20				
		2-Wire Voice Grade Port, Diff Serving Wire Center - 800 Service Term - Basic Local Area			UEP91	UEPYZ	1.36	104.41	67.93				15.20				
		2-Wire Voice Grade Port terminated in on Megalink or equivalent - Basic Local Area			UEP91	UEPY9	1.36	38.85	19.08				15.20				
		2-Wire Voice Grade Port Terminated on 800 Service Term - Basic Local Area			UEP91	UEPY2	1.36	38.85	19.08				15.20				
	AL, KY, LA, MS, & TN Only																
		2-Wire Voice Grade Port (Centrex)			UEP91	UEPQA	1.36	38.85	19.08				15.20				
		2-Wire Voice Grade Port (Centrex 800 termination)			UEP91	UEPQB	1.36	38.85	19.08				15.20				
		2-Wire Voice Grade Port (Centrex with Caller ID)1			UEP91	UEPQH	1.36	38.85	19.08				15.20				
		2-Wire Voice Grade Port (Centrex from diff Serving Wire Center)2			UEP91	UEPQM	1.36	104.41	67.93				15.20				
		2-Wire Voice Grade Port, Diff Serving Wire Center - 800 Service Term			UEP91	UEPQZ	1.36	104.41	67.93				15.20				
		2-Wire Voice Grade Port terminated in on Megalink or equivalent			UEP91	UEPQ9	1.36	38.85	19.08				15.20				
		2-Wire Voice Grade Port Terminated on 800 Service Term			UEP91	UEPQ2	1.36	38.85	19.08				15.20				
	Local Switching																
		Centrex Intercom Funtionality, per port			UEP91	URECS	0.8577										
	Local Number Portability																
		Local Number Portability (1 per port)			UEP91	LNPCC	0.35										
	Features																
		All Standard Features Offered, per port			UEP91	UEPVF	0.00										
		All Select Features Offered, per port			UEP91	UEPVS	0.00	412.25					15.20				
		All Centrex Control Features Offered, per port			UEP91	UEPVC	0.00										
	NARS																
		Unbundled Network Access Register - Combination			UEP91	UARCX	0.00	0.00	0.00				15.20				
		Unbundled Network Access Register - Indial			UEP91	UAR1X	0.00	0.00	0.00				15.20				
		Unbundled Network Access Register - Outdial			UEP91	UAROX	0.00	0.00	0.00				15.20				
	Miscellaneous Terminations																
	2-Wire Trunk Side																
		Trunk Side Terminations, each			UEP91	CENA6	8.29	115.85	18.20				15.20				
	Interoffice Channel Mileage - 2-Wire																
		Interoffice Channel Facilities Termination - Voice Grade			UEP91	M1GBC	22.60	39.36	26.62				15.20				
		Interoffice Channel mileage, per mile or fraction of mile			UEP91	M1GBM	0.013										
	Feature Activations (DS0) Centrex Loops on Channelized DS1 Service																
	D4 Channel Bank Feature Activations																
		Feature Activation on D-4 Channel Bank Centrex Loop Slot			UEP91	1PQWS	0.6497						15.20				
		Feature Activation on D-4 Channel Bank FX line Side Loop Slot			UEP91	1PQW6	0.6497						15.20				
		Feature Activation on D-4 Channel Bank FX Trunk Side Loop Slot			UEP91	1PQW7	0.6497						15.20				
		Feature Activation on D-4 Channel Bank Centrex Loop Slot - Different Wire Center			UEP91	1PQWP	0.6497						15.20				
		Feature Activation on D-4 Channel Bank Private Line Loop Slot			UEP91	1PQWV	0.6497						15.20				
		Feature Activation on D-4 Channel Bank Tjie Line/Trunk Loop Slot			UEP91	1PQWQ	0.6497						15.20				
		Feature Activation on D-4 Channel Bank WATS Loop Slot			UEP91	1PQWA	0.6497						15.20				
	Non-Recurring Charges (NRC) Associated with UNE-P Centrex																
		Conversion - Currently Combined Switch-As-Is with allowed changes, per port			UEP91	USAC2		0.10	0.10				15.20				

CATEGORY	RATE ELEMENTS	Interim	Zone	BCS	USOC	RATES ($)					Svc Order Submitted Elec per LSR	Svc Order Submitted Manually per LSR	Attachment: 2		Exhibit: B	
													Incremental Charge - Manual Svc Order vs. Electronic-1st	Incremental Charge - Manual Svc Order vs. Electronic-Add'l	Incremental Charge - Manual Svc Order vs. Electronic-Disc 1st	Incremental Charge - Manual Svc Order vs. Electronic-Disc Add'l
						Rec	Nonrecurring		Nonrecurring Disconnect				OSS Rates($)			
							First	Add'l	First	Add'l	SOMEC	SOMAN	SOMAN	SOMAN	SOMAN	SOMAN
	Conversion of Existing Centrex Common Block			UEP91	USACN	0.00	36.66	16.10								
	New Centrex Standard Common Block			UEP91	M1ACS	0.00	680.40					15.20				
	New Centrex Customized Common Block			UEP91	M1ACC	0.00	680.40					15.20				
	Secondary Block, per Block			UEP91	M2CC1	0.00	79.31					15.20				
	NAR Establishment Charge, Per Occasion			UEP91	URECA	0.00	73.93					15.20				
UNE-P CENTREX - 5ESS (Valid in All States)																
2-Wire VG Loop/2-Wire Voice Grade Port (Centrex) Combo																
UNE Port/Loop Combination Rates (Non-Design)																
	2-Wire VG Loop/2-Wire Voice Grade Port (Centrex) Port Combo - Non-Design		1	UEP95		13.13										
	2-Wire VG Loop/2-Wire Voice Grade Port (Centrex)Port Combo - Non-Design		2	UEP95		23.75										
	2-Wire VG Loop/2-Wire Voice Grade Port (Centrex)Port Combo - Non-Design		3	UEP95		49.62										
UNE Port/Loop Combination Rates (Design)																
	2-Wire VG Loop/2-Wire Voice Grade Port (Centrex) Port Combo - Design		1	UEP95		16.29										
	2-Wire VG Loop/2-Wire Voice Grade Port (Centrex)Port Combo - Design		2	UEP95		26.71										
	2-Wire VG Loop/2-Wire Voice Grade Port (Centrex)Port Combo - Design		3	UEP95		51.82										
UNE Loop Rate																
	2-Wire Voice Grade Loop (SL 1) - Zone 1		1	UEP95	UECS1	11.77										
	2-Wire Voice Grade Loop (SL 1) - Zone 2		2	UEP95	UECS1	22.39										
	2-Wire Voice Grade Loop (SL 1) - Zone 3		3	UEP95	UECS1	48.26										
	2-Wire Voice Grade Loop (SL 2) - Zone 1		1	UEP95	UECS2	14.93										
	2-Wire Voice Grade Loop (SL 2) - Zone 2		2	UEP95	UECS2	25.35										
	2-Wire Voice Grade Loop (SL 2) - Zone 3		3	UEP95	UECS2	50.46										
UNE Port Rate																
All States																
	2-Wire Voice Grade Port (Centrex) Basic Local Area			UEP95	UEPYA	1.36	38.85	19.08				15.20				
	2-Wire Voice Grade Port (Centrex 800 termination)			UEP95	UEPYB	1.36	38.85	19.08				15.20				
	2-Wire Voice Grade Port (Centrex with Caller ID)1Basic Local Area			UEP95	UEPYH	1.36	38.85	19.08				15.20				
	2-Wire Voice Grade Port (Centrex from diff Serving Wire Center)2 Basic Local Area			UEP95	UEPYM	1.36	104.41	67.93				15.20				
	2-Wire Voice Grade Port, Diff Serving Wire Center - 800 Service Term - Basic Local Area			UEP95	UEPYZ	1.36	104.41	67.93				15.20				
	2-Wire Voice Grade Port terminated in on Megalink or equivalent - Basic Local Area			UEP95	UEPY9	1.36	38.85	19.08				15.20				
	2-Wire Voice Grade Port Terminated on 800 Service Term - Basic Local Area			UEP95	UEPY2	1.36	38.85	19.08				15.20				
AL, KY, LA, MS, SC, & TN Only																
	2-Wire Voice Grade Port (Centrex)			UEP95	UEPQA	1.36	38.85	19.08				15.20				
	2-Wire Voice Grade Port (Centrex 800 termination)			UEP95	UEPQB	1.36	38.85	19.08				15.20				
	2-Wire Voice Grade Port (Centrex with Caller ID)1			UEP95	UEPQH	1.36	38.85	19.08				15.20				
	2-Wire Voice Grade Port (Centrex from diff Serving Wire Center)2			UEP95	UEPQM	1.36	104.41	67.93				15.20				
	2-Wire Voice Grade Port, Diff Serving Wire Center - 800 Service Term			UEP95	UEPQZ	1.36	104.41	67.93				15.20				
	2-Wire Voice Grade Port terminated in on Megalink or equivalent			UEP95	UEPQ9	1.36	38.85	19.08				15.20				
	2-Wire Voice Grade Port Terminated on 800 Service Term			UEP95	UEPQ2	1.36	38.85	19.08				15.20				
Local Switching																
	Centrex Intercom Funtionality, per port			UEP95	URECS	0.8577						15.20				
Local Number Portability																
	Local Number Portability (1 per port)			UEP95	LNPCC	0.35										
Features																
	All Standard Features Offered, per port			UEP95	UEPVF	0.00						15.20				

CATEGORY	RATE ELEMENTS	Interim	Zone	BCS	USOC	RATES ($)					Svc Order Submitted Elec per LSR	Svc Order Submitted Manually per LSR	Attachment: 2		Exhibit: B	
													Incremental Charge - Manual Svc Order vs. Electronic-1st	Incremental Charge - Manual Svc Order vs. Electronic-Add'l	Incremental Charge - Manual Svc Order vs. Electronic-Disc 1st	Incremental Charge - Manual Svc Order vs. Electronic-Disc Add'l
						Rec	Nonrecurring		Nonrecurring Disconnect		OSS Rates($)					
							First	Add'l	First	Add'l	SOMEC	SOMAN	SOMAN	SOMAN	SOMAN	SOMAN
	All Select Features Offered, per port			UEP95	UEPVS	0.00	412.25					15.20				
	All Centrex Control Features Offered, per port			UEP95	UEPVC	0.00						15.20				
NARS																
	Unbundled Network Access Register - Combination			UEP95	UARCX	0.00	0.00	0.00				15.20				
	Unbundled Network Access Register - Indial			UEP95	UAR1X	0.00	0.00	0.00				15.20				
	Unbundled Network Access Register - Outdial			UEP95	UAROX	0.00	0.00	0.00				15.20				
Miscellaneous Terminations																
2-Wire Trunk Side																
	Trunk Side Terminations, each			UEP95	CEND6	8.29	115.85	18.20				15.20				
4-Wire Digital (1.544 Megabits)																
	DS1 Circuit Terminations, each			UEP95	M1HD1	68.47	196.18	92.92				15.20				
	DS0 Channels Activated, each			UEP95	M1HDO	0.00	14.06					15.20				
Interoffice Channel Mileage - 2-Wire																
	Interoffice Channel Facilities Termination			UEP95	M1GBC	22.60	39.36	26.62				15.20				
	Interoffice Channel mileage, per mile or fraction of mile			UEP95	M1GBM	0.013										
Feature Activations (DS0) Centrex Loops on Channelized DS1 Service																
D4 Channel Bank Feature Activations																
	Feature Activation on D-4 Channel Bank Centrex Loop Slot			UEP95	1PQWS	0.6497						15.20				
	Feature Activation on D-4 Channel Bank FX line Side Loop Slot			UEP95	1PQW6	0.6497						15.20				
	Feature Activation on D-4 Channel Bank FX Trunk Side Loop Slot			UEP95	1PQW7	0.6497						15.20				
	Feature Activation on D-4 Channel Bank Centrex Loop Slot - Different Wire Center			UEP95	1PQWP	0.6497						15.20				
	Feature Activation on D-4 Channel Bank Private Line Loop Slot			UEP95	1PQWV	0.6497						15.20				
	Feature Activation on D-4 Channel Bank Tjie Line/Trunk Loop Slot			UEP95	1PQWQ	0.6497						15.20				
	Feature Activation on D-4 Channel Bank WATS Loop Slot			UEP95	1PQWA	0.6497						15.20				
Non-Recurring Charges (NRC) Associated with UNE-P Centrex																
	NRC Conversion Currently Combined Switch-As-Is with allowed changes, per port			UEP95	USAC2		0.10	0.10				15.20				
	Conversion of Existing Centrex Common Block, each			UEP95	USACN		36.66	16.10				15.20				
	New Centrex Standard Common Block			UEP95	M1ACS	0.00	680.40					15.20				
	New Centrex Customized Common Block			UEP95	M1ACC	0.00	680.40					15.20				
	NAR Establishment Charge, Per Occasion			UEP95	URECA	0.00	73.93					15.20				
UNE-P CENTREX - DMS100 (Valid in All States)																
2-Wire VG Loop/2-Wire Voice Grade Port (Centrex) Combo																
UNE Port/Loop Combination Rates (Non-Design)																
	2-Wire VG Loop/2-Wire Voice Grade Port (Centrex) Port Combo - Non-Design		1	UEP9D		13.13										
	2-Wire VG Loop/2-Wire Voice Grade Port (Centrex)Port Combo - Non-Design		2	UEP9D		23.75										
	2-Wire VG Loop/2-Wire Voice Grade Port (Centrex)Port Combo - Non-Design		3	UEP9D		49.62										
UNE Port/Loop Combination Rates (Design)																
	2-Wire VG Loop/2-Wire Voice Grade Port (Centrex) Port Combo - Design		1	UEP9D		16.29										
	2-Wire VG Loop/2-Wire Voice Grade Port (Centrex)Port Combo - Design		2	UEP9D		26.71										
	2-Wire VG Loop/2-Wire Voice Grade Port (Centrex)Port Combo - Design		3	UEP9D		51.82										
UNE Loop Rate																
	2-Wire Voice Grade Loop (SL 1) - Zone 1		1	UEP9D	UECS1	11.77										
	2-Wire Voice Grade Loop (SL 1) - Zone 2		2	UEP9D	UECS1	22.39										
	2-Wire Voice Grade Loop (SL 1) - Zone 3		3	UEP9D	UECS1	48.26										
	2-Wire Voice Grade Loop (SL 2) - Zone 1		1	UEP9D	UECS2	14.93										
	2-Wire Voice Grade Loop (SL 2) - Zone 2		2	UEP9D	UECS2	25.35										
	2-Wire Voice Grade Loop (SL 2) - Zone 3		3	UEP9D	UECS2	50.46										

UNBUNDLED NETWORK ELEMENTS - Louisiana														Attachment: 2		Exhibit: B	
CATEGORY		RATE ELEMENTS	Interim	Zone	BCS	USOC	RATES ($)					Svc Order Submitted Elec per LSR	Svc Order Submitted Manually per LSR	Incremental Charge - Manual Svc Order vs. Electronic-1st	Incremental Charge - Manual Svc Order vs. Electronic-Add'l	Incremental Charge - Manual Svc Order vs. Electronic-Disc 1st	Incremental Charge - Manual Svc Order vs. Electronic-Disc Add'l
							Rec	Nonrecurring		Nonrecurring Disconnect		OSS Rates($)					
								First	Add'l	First	Add'l	SOMEC	SOMAN	SOMAN	SOMAN	SOMAN	SOMAN
	UNE Port Rate																
	ALL STATES																
		2-Wire Voice Grade Port (Centrex) Basic Local Area			UEP9D	UEPYA	1.36	38.85	19.08				15.20				
		2-Wire Voice Grade Port (Centrex 800 termination)Basic Local Area			UEP9D	UEPYB	1.36	38.85	19.08				15.20				
		2-Wire Voice Grade Port (Centrex / EBS-PSET)3Basic Local Area			UEP9D	UEPYC	1.36	38.85	19.08				15.20				
		2-Wire Voice Grade Port (Centrex / EBS-M5009)3Basic Local Area			UEP9D	UEPYD	1.36	38.85	19.08				15.20				
		2-Wire Voice Grade Port (Centrex / EBS-M5209))3 Basic Local Area			UEP9D	UEPYE	1.36	38.85	19.08				15.20				
		2-Wire Voice Grade Port (Centrex / EBS-M5112))3 Basic Local Area			UEP9D	UEPYF	1.36	38.85	19.08				15.20				
		2-Wire Voice Grade Port (Centrex / EBS-M5312))3Basic Local Area			UEP9D	UEPYG	1.36	38.85	19.08				15.20				
		2-Wire Voice Grade Port (Centrex / EBS-M5008))3 Basic Local Area			UEP9D	UEPYT	1.36	38.85	19.08				15.20				
		2-Wire Voice Grade Port (Centrex / EBS-M5208))3 Basic Local Area			UEP9D	UEPYU	1.36	38.85	19.08				15.20				
		2-Wire Voice Grade Port (Centrex / EBS-M5216))3 Basic Local Area			UEP9D	UEPYV	1.36	38.85	19.08				15.20				
		2-Wire Voice Grade Port (Centrex / EBS-M5316))3 Basic Local Area			UEP9D	UEPY3	1.36	38.85	19.08				15.20				
		2-Wire Voice Grade Port (Centrex with Caller ID) Basic Local Area			UEP9D	UEPYH	1.36	38.85	19.08				15.20				
		2-Wire Voice Grade Port (Centrex/Caller ID/Msg Wtg Lamp Indication))3 Basic Local Area			UEP9D	UEPYW	1.36	38.85	19.08				15.20				
		2-Wire Voice Grade Port (Centrex/Msg Wtg Lamp Indication))3 Basic Local Area			UEP9D	UEPYJ	1.36	38.85	19.08				15.20				
		2-Wire Voice Grade Port (Centrex from diff Serving Wire Center) 2 Basic Local Area			UEP9D	UEPYM	1.36	104.41	67.93				15.20				
		2-Wire Voice Grade Port (Centrex/differ SWC /EBS-PSET)2, 3 Basic Local Area			UEP9D	UEPYO	1.36	104.41	67.93				15.20				
		2-Wire Voice Grade Port (Centrex/differ SWC /EBS-M5009)2, 3 Basic Local Area			UEP9D	UEPYP	1.36	104.41	67.93				15.20				
		2-Wire Voice Grade Port (Centrex/differ SWC /EBS-5209)2, 3 Basic Local Area			UEP9D	UEPYQ	1.36	104.41	67.93				15.20				
		2-Wire Voice Grade Port (Centrex/differ SWC /EBS-M5112)2, 3 Basic Local Area			UEP9D	UEPYR	1.36	104.41	67.93				15.20				
		2-Wire Voice Grade Port (Centrex/differ SWC /EBS-M5312)2, 3 Basic Local Area			UEP9D	UEPYS	1.36	104.41	67.93				15.20				
		2-Wire Voice Grade Port (Centrex/differ SWC /EBS-M5008)2, 3 Basic Local Area			UEP9D	UEPY4	1.36	104.41	67.93				15.20				
		2-Wire Voice Grade Port (Centrex/differ SWC /EBS-M5208)2, 3 Basic Local Area			UEP9D	UEPY5	1.36	104.41	67.93				15.20				
		2-Wire Voice Grade Port (Centrex/differ SWC /EBS-M5216)2, 3 Basic Local Area			UEP9D	UEPY6	1.36	104.41	67.93				15.20				
		2-Wire Voice Grade Port (Centrex/differ SWC /EBS-M5316)2, 3 Basic Local Area			UEP9D	UEPY7	1.36	104.41	67.93				15.20				
		2-Wire Voice Grade Port, Diff Serving Wire Center - 800 Service Term			UEP9D	UEPYZ	1.36	104.41	67.93				15.20				
		2-Wire Voice Grade Port terminated in on Megalink or equivalent Basic Local Area			UEP9D	UEPY9	1.36	38.85	19.08				15.20				
		2-Wire Voice Grade Port Terminated on 800 Service Term Basic Local Area			UEP9D	UEPY2	1.36	38.85	19.08				15.20				
	AL, KY, LA, MS, SC, & TN Only																
		2-Wire Voice Grade Port (Centrex)			UEP9D	UEPQA	1.36	38.85	19.08				15.20				
		2-Wire Voice Grade Port (Centrex 800 termination)			UEP9D	UEPQB	1.36	38.85	19.08				15.20				
		2-Wire Voice Grade Port (Centrex / EBS-PSET)3			UEP9D	UEPQC	1.36	38.85	19.08				15.20				

CATEGORY	RATE ELEMENTS	Interim	Zone	BCS	USOC	RATES ($) Rec	Nonrecurring First	Nonrecurring Add'l	Nonrecurring Disconnect First	Nonrecurring Disconnect Add'l	Svc Order Submitted Elec per LSR	Svc Order Submitted Manually per LSR	Attachment: 2 Incremental Charge - Manual Svc Order vs. Electronic- 1st	Attachment: 2 Incremental Charge - Manual Svc Order vs. Electronic- Add'l	Exhibit: B Incremental Charge - Manual Svc Order vs. Electronic- Disc 1st	Exhibit: B Incremental Charge - Manual Svc Order vs. Electronic- Disc Add'l
											OSS Rates($)					
											SOMEC	SOMAN	SOMAN	SOMAN	SOMAN	SOMAN
	2-Wire Voice Grade Port (Centrex / EBS-M5009)3			UEP9D	UEPQD	1.36	38.85	19.08				15.20				
	2-Wire Voice Grade Port (Centrex / EBS-M5209)3			UEP9D	UEPQE	1.36	38.85	19.08				15.20				
	2-Wire Voice Grade Port (Centrex / EBS-M5112)3			UEP9D	UEPQF	1.36	38.85	19.08				15.20				
	2-Wire Voice Grade Port (Centrex / EBS-M5312)3			UEP9D	UEPQG	1.36	38.85	19.08				15.20				
	2-Wire Voice Grade Port (Centrex / EBS-M5008)3			UEP9D	UEPQT	1.36	38.85	19.08				15.20				
	2-Wire Voice Grade Port (Centrex / EBS-M5208)3			UEP9D	UEPQU	1.36	38.85	19.08				15.20				
	2-Wire Voice Grade Port (Centrex / EBS-M5216)3			UEP9D	UEPQV	1.36	38.85	19.08				15.20				
	2-Wire Voice Grade Port (Centrex / EBS-M5316)3			UEP9D	UEPQ3	1.36	38.85	19.08				15.20				
	2-Wire Voice Grade Port (Centrex with Caller ID)			UEP9D	UEPQH	1.36	38.85	19.08				15.20				
	2-Wire Voice Grade Port (Centrex/Caller ID/Msg Wtg Lamp Indication)3			UEP9D	UEPQW	1.36	38.85	19.08				15.20				
	2-Wire Voice Grade Port (Centrex/Msg Wtg Lamp Indication)3			UEP9D	UEPQJ	1.36	38.85	19.08				15.20				
	2-Wire Voice Grade Port (Centrex from diff Serving Wire Center) 2			UEP9D	UEPQM	1.36	104.41	67.93				15.20				
	2-Wire Voice Grade Port (Centrex/differ SWC /EBS-PSET)2, 3			UEP9D	UEPQO	1.36	104.41	67.93				15.20				
	2-Wire Voice Grade Port (Centrex/differ SWC /EBS-M5009)2, 3			UEP9D	UEPQP	1.36	104.41	67.93				15.20				
	2-Wire Voice Grade Port (Centrex/differ SWC /EBS-5209)2, 3			UEP9D	UEPQQ	1.36	104.41	67.93				15.20				
	2-Wire Voice Grade Port (Centrex/differ SWC /EBS-M5112)2, 3			UEP9D	UEPQR	1.36	104.41	67.93				15.20				
	2-Wire Voice Grade Port (Centrex/differ SWC /EBS-M5312)2, 3			UEP9D	UEPQS	1.36	104.41	67.93				15.20				
	2-Wire Voice Grade Port (Centrex/differ SWC /EBS-M5008)2, 3			UEP9D	UEPQ4	1.36	104.41	67.93				15.20				
	2-Wire Voice Grade Port (Centrex/differ SWC /EBS-M5208)2, 3			UEP9D	UEPQ5	1.36	104.41	67.93				15.20				
	2-Wire Voice Grade Port (Centrex/differ SWC /EBS-M5216)2, 3			UEP9D	UEPQ6	1.36	104.41	67.93				15.20				
	2-Wire Voice Grade Port (Centrex/differ SWC /EBS-M5316)2, 3			UEP9D	UEPQ7	1.36	104.41	67.93				15.20				
	2-Wire Voice Grade Port, Diff Serving Wire Center - 800 Service Term			UEP9D	UEPQZ	1.36	104.41	67.93				15.20				
	2-Wire Voice Grade Port terminated in on Megalink or equivalent			UEP9D	UEPQ9	1.36	38.85	19.08				15.20				
	2-Wire Voice Grade Port Terminated on 800 Service Term			UEP9D	UEPQ2	1.36	38.85	19.08				15.20				
Local Switching																
	Centrex Intercom Funtionality, per port			UEP9D	URECS	0.8577										
Local Number Portability																
	Local Number Portability (1 per port)			UEP9D	LNPCC	0.35										
Features																
	All Standard Features Offered, per port			UEP9D	UEPVF	0.00						15.20				
	All Select Features Offered, per port			UEP9D	UEPVS	0.00	412.25					15.20				
	All Centrex Control Features Offered, per port			UEP9D	UEPVC	0.00						15.20				
NARS																
	Unbundled Network Access Register - Combination			UEP9D	UARCX	0.00	0.00	0.00				15.20				
	Unbundled Network Access Register - Inward			UEP9D	UAR1X	0.00	0.00	0.00				15.20				
	Unbundled Network Access Register - Outdial			UEP9D	UAROX	0.00	0.00	0.00				15.20				
Miscellaneous Terminations																
2-Wire Trunk Side																
	Trunk Side Terminations, each			UEP9D	CEND6	8.29	115.85	18.20				15.20				
4-Wire Digital (1.544 Megabits)																
	DS1 Circuit Terminations, each			UEP9D	M1HD1	68.47	196.18	98.62				15.20				
	DS0 Channels Activiated per Channel			UEP9D	M1HDO	0.00	14.06					15.20				
Interoffice Channel Mileage - 2-Wire																
	Interoffice Channel Facilities Termination			UEP9D	M1GBC	22.60	39.36	26.62				15.20				
	Interoffice Channel mileage, per mile or fraction of mile			UEP9D	M1GBM	0.013										
Feature Activations (DS0) Centrex Loops on Channelized DS1 Service																
D4 Channel Bank Feature Activations																
	Feature Activation on D-4 Channel Bank Centrex Loop Slot			UEP9D	1PQWS	0.6497						15.20				

CATEGORY	RATE ELEMENTS	Interim	Zone	BCS	USOC	RATES ($)					Svc Order Submitted Elec per LSR	Svc Order Submitted Manually per LSR	Attachment: 2		Exhibit: B	
													Incremental Charge - Manual Svc Order vs. Electronic-1st	Incremental Charge - Manual Svc Order vs. Electronic-Add'l	Incremental Charge - Manual Svc Order vs. Electronic-Disc 1st	Incremental Charge - Manual Svc Order vs. Electronic-Disc Add'l
						Rec	Nonrecurring		Nonrecurring Disconnect		OSS Rates($)					
							First	Add'l	First	Add'l	SOMEC	SOMAN	SOMAN	SOMAN	SOMAN	SOMAN
	Feature Activation on D-4 Channel Bank FX line Side Loop Slot			UEP9D	1PQW6	0.6497						15.20				
	Feature Activation on D-4 Channel Bank FX Trunk Side Loop Slot			UEP9D	1PQW7	0.6497						15.20				
	Feature Activation on D-4 Channel Bank Centrex Loop Slot - Different Wire Center			UEP9D	1PQWP	0.6497						15.20				
	Feature Activation on D-4 Channel Bank Private Line Loop Slot			UEP9D	1PQWV	0.6497						15.20				
	Feature Activation on D-4 Channel Bank Tjie Line/Trunk Loop Slot			UEP9D	1PQWQ	0.6497						15.20				
	Feature Activation on D-4 Channel Bank WATS Loop Slot			UEP9D	1PQWA	0.6497						15.20				
	Non-Recurring Charges (NRC) Associated with UNE-P Centrex															
	NRC Conversion Currently Combined Switch-As-Is with allowed changes, per port			UEP9D	USAC2		0.10	0.10				15.20				
	Conversion of existing Centrex Common Block, each			UEP9D	USACN		36.66	16.10				15.20				
	New Centrex Standard Common Block			UEP9D	M1ACS	0.00	680.40					15.20				
	New Centrex Customized Common Block			UEP9D	M1ACC	0.00	680.40					15.20				
	NAR Establishment Charge, Per Occasion			UEP9D	URECA	0.00	73.93					15.20				
	UNE-P CENTREX - EWSD (Valid in AL, FL, KY, LA, MS & TN)															
	2-Wire VG Loop/2-Wire Voice Grade Port (Centrex) Combo															
	UNE Port/Loop Combination Rates (Non-Design)															
	2-Wire VG Loop/2-Wire Voice Grade Port (Centrex) Port Combo - Non-Design		1	UEP9E		13.13										
	2-Wire VG Loop/2-Wire Voice Grade Port (Centrex)Port Combo - Non-Design		2	UEP9E		23.75										
	2-Wire VG Loop/2-Wire Voice Grade Port (Centrex)Port Combo - Non-Design		3	UEP9E		49.62										
	UNE Port/Loop Combination Rates (Design)															
	2-Wire VG Loop/2-Wire Voice Grade Port (Centrex) Port Combo - Design		1	UEP9E		16.29										
	2-Wire VG Loop/2-Wire Voice Grade Port (Centrex)Port Combo - Design		2	UEP9E		26.71										
	2-Wire VG Loop/2-Wire Voice Grade Port (Centrex)Port Combo - Design		3	UEP9E		51.82										
	UNE Loop Rate															
	2-Wire Voice Grade Loop (SL 1) - Zone 1		1	UEP9E	UECS1	11.77										
	2-Wire Voice Grade Loop (SL 1) - Zone 2		2	UEP9E	UECS1	22.39										
	2-Wire Voice Grade Loop (SL 1) - Zone 3		3	UEP9E	UECS1	48.26										
	2-Wire Voice Grade Loop (SL 2) - Zone 1		1	UEP9E	UECS2	14.93										
	2-Wire Voice Grade Loop (SL 2) - Zone 2		2	UEP9E	UECS2	25.35										
	2-Wire Voice Grade Loop (SL 2) - Zone 3		3	UEP9E	UECS2	50.46										
	UNE Port Rate															
	AL, FL, KY, LA, MS, & TN only															
	2-Wire Voice Grade Port (Centrex) Basic Local Area			UEP9E	UEPYA	1.36	38.85	19.08				15.20				
	2-Wire Voice Grade Port (Centrex 800 termination)Basic Local Area			UEP9E	UEPYB	1.36	38.85	19.08				15.20				
	2-Wire Voice Grade Port (Centrex with Caller ID)1Basic Local Area			UEP9E	UEPYH	1.36	38.85	19.08				15.20				
	2-Wire Voice Grade Port (Centrex from diff Serving Wire Center)2 Basic Local Area			UEP9E	UEPYM	1.36	104.41	67.93				15.20				
	2-Wire Voice Grade Port, Diff Serving Wire Center - 800 Service Term - Basic Local Area			UEP9E	UEPYZ	1.36	104.41	67.93				15.20				
	2-Wire Voice Grade Port terminated in on Megalink or equivalent - Basic Local Area			UEP9E	UEPY9	1.36	38.85	19.08				15.20				
	2-Wire Voice Grade Port Terminated on 800 Service Term - Basic Local Area			UEP9E	UEPY2	1.36	38.85	19.08				15.20				
	AL, KY, LA, MS, & TN Only															
	2-Wire Voice Grade Port (Centrex)			UEP9E	UEPQA	1.36	38.85	19.08				15.20				
	2-Wire Voice Grade Port (Centrex 800 termination)			UEP9E	UEPQB	1.36	38.85	19.08				15.20				

UNBUNDLED NETWORK ELEMENTS - Louisiana														Attachment: 2		Exhibit: B	
CATEGORY		RATE ELEMENTS	Interim	Zone	BCS	USOC	RATES ($)					Svc Order Submitted Elec per LSR	Svc Order Submitted Manually per LSR	Incremental Charge - Manual Svc Order vs. Electronic-1st	Incremental Charge - Manual Svc Order vs. Electronic-Add'l	Incremental Charge - Manual Svc Order vs. Electronic-Disc 1st	Incremental Charge - Manual Svc Order vs. Electronic-Disc Add'l
							Rec	Nonrecurring		Nonrecurring Disconnect		OSS Rates($)					
								First	Add'l	First	Add'l	SOMEC	SOMAN	SOMAN	SOMAN	SOMAN	SOMAN
		2-Wire Voice Grade Port (Centrex with Caller ID)1			UEP9E	UEPQH	1.36	38.85	19.08				15.20				
		2-Wire Voice Grade Port (Centrex from diff Serving Wire Center)2			UEP9E	UEPQM	1.36	104.41	67.93				15.20				
		2-Wire Voice Grade Port, Diff Serving Wire Center - 800 Service Term			UEP9E	UEPQZ	1.36	104.41	67.93				15.20				
		2-Wire Voice Grade Port terminated in on Megalink or equivalent			UEP9E	UEPQ9	1.36	38.85	19.08				15.20				
		2-Wire Voice Grade Port Terminated on 800 Service Term			UEP9E	UEPQ2	1.36	38.85	19.08				15.20				
	Local Switching																
		Centrex Intercom Funtionality, per port			UEP9E	URECS	0.8577										
	Local Number Portability																
		Local Number Portability (1 per port)			UEP9E	LNPCC	0.35										
	Features																
		All Standard Features Offered, per port			UEP9E	UEPVF	0.00						15.20				
		All Select Features Offered, per port			UEP9E	UEPVS	0.00	412.25					15.20				
		All Centrex Control Features Offered, per port			UEP9E	UEPVC	0.00						15.20				
	NARS																
		Unbundled Network Access Register - Combination			UEP9E	UARCX	0.00	0.00	0.00								
		Unbundled Network Access Register - Indial			UEP9E	UAR1X	0.00	0.00	0.00								
		Unbundled Network Access Register - Outdial			UEP9E	UAROX	0.00	0.00	0.00								
	Miscellaneous Terminations																
	2-Wire Trunk Side																
		Trunk Side Terminations, each			UEP9E	CEND6	8.29	115.85	18.20				15.20				
	4-Wire Digital (1.544 Megabits)																
		DS1 Circuit Terminations, each			UEP9E	M1HD1	68.47	196.18	92.92				15.20				
		DS0 Channel Activated Per Channel			UEP9E	M1HDO	0.00	14.06					15.20				
	Interoffice Channel Mileage - 2-Wire																
		Interoffice Channel Facilities Termination			UEP9E	M1GBC	22.60	39.36	26.62				15.20				
		Interoffice Channel mileage, per mile or fraction of mile			UEP9E	M1GBM	0.013										
	Feature Activations (DS0) Centrex Loops on Channelized DS1 Service																
	D4 Channel Bank Feature Activations																
		Feature Activation on D-4 Channel Bank Centrex Loop Slot			UEP9E	1PQWS	0.6497						15.20				
		Feature Activation on D-4 Channel Bank FX line Side Loop Slot			UEP9E	1PQW6	0.6497						15.20				
		Feature Activation on D-4 Channel Bank FX Trunk Side Loop Slot			UEP9E	1PQW7	0.6497						15.20				
		Feature Activation on D-4 Channel Bank Centrex Loop Slot - Different Wire Center			UEP9E	1PQWP	0.6497						15.20				
		Feature Activation on D-4 Channel Bank Private Line Loop Slot			UEP9E	1PQWV	0.6497						15.20				
		Feature Activation on D-4 Channel Bank Tjie Line/Trunk Loop Slot			UEP9E	1PQWQ	0.6497						15.20				
		Feature Activation on D-4 Channel Bank WATS Loop Slot			UEP9E	1PQWA	0.6497						15.20				
	Non-Recurring Charges (NRC) Associated with UNE-P Centrex																
		NRC Conversion Currently Combined Switch-As-Is with allowed changes, per port			UEP9E	USAC2		0.10	0.10				15.20				
		Conversion of Existing Centrex Common Block, each			UEP9E	USACN		36.66	16.10				15.20				
		New Centrex Standard Common Block			UEP9E	M1ACS	0.00	680.40					15.20				
		New Centrex Customized Common Block			UEP9E	M1ACC	0.00	680.40					15.20				
		NAR Establishment Charge, Per Occasion			UEP9E	URECA	0.00	73.93					15.20				
	UNE-P CENTREX - DCO - Valid in AL, KY, LA, MS, & TN)																
	2-Wire VG Loop/2-Wire Voice Grade Port (Centrex) Combo																
	UNE Port/Loop Combination Rates (Non-Design)																
		2-Wire VG Loop/2-Wire Voice Grade Port (Centrex) Port Combo - Non-Design		1	UEP93		13.13										
		2-Wire VG Loop/2-Wire Voice Grade Port (Centrex)Port Combo - Non-Design		2	UEP93		23.75										
		2-Wire VG Loop/2-Wire Voice Grade Port (Centrex)Port Combo - Non-Design		3	UEP93		49.62										

UNBUNDLED NETWORK ELEMENTS - Louisiana													Attachment: 2		Exhibit: B	
CATEGORY	RATE ELEMENTS	Interim	Zone	BCS	USOC	RATES ($)					Svc Order Submitted Elec per LSR	Svc Order Submitted Manually per LSR	Incremental Charge - Manual Svc Order vs. Electronic-1st	Incremental Charge - Manual Svc Order vs. Electronic-Add'l	Incremental Charge - Manual Svc Order vs. Electronic-Disc 1st	Incremental Charge - Manual Svc Order vs. Electronic-Disc Add'l
						Rec	Nonrecurring		Nonrecurring Disconnect		OSS Rates($)					
							First	Add'l	First	Add'l	SOMEC	SOMAN	SOMAN	SOMAN	SOMAN	SOMAN
UNE Port/Loop Combination Rates (Design)																
	2-Wire VG Loop/2-Wire Voice Grade Port (Centrex) Port Combo - Design		1	UEP93		16.29										
	2-Wire VG Loop/2-Wire Voice Grade Port (Centrex)Port Combo - Design		2	UEP93		26.71										
	2-Wire VG Loop/2-Wire Voice Grade Port (Centrex)Port Combo - Design		3	UEP93		51.82										
UNE Loop Rate																
	2-Wire Voice Grade Loop (SL 1) - Zone 1		1	UEP93	UECS1	11.77										
	2-Wire Voice Grade Loop (SL 1) - Zone 2		2	UEP93	UECS1	22.36										
	2-Wire Voice Grade Loop (SL 1) - Zone 3		3	UEP93	UECS1	48.26										
	2-Wire Voice Grade Loop (SL 2) - Zone 1		1	UEP93	UECS2	14.93										
	2-Wire Voice Grade Loop (SL 2) - Zone 2		2	UEP93	UECS2	25.35										
	2-Wire Voice Grade Loop (SL 2) - Zone 3		3	UEP93	UECS2	50.46										
UNE Port Rate																
AL, KY, LA, MS, & TN only																
	2-Wire Voice Grade Port (Centrex) Basic Local Area			UEP93	UEPYA	1.36	38.85	19.08				15.20				
	2-Wire Voice Grade Port (Centrex 800 termination)Basic Local Area			UEP93	UEPYB	1.36	38.85	19.08				15.20				
	2-Wire Voice Grade Port (Centrex with Caller ID)1Basic Local Area			UEP93	UEPYH	1.36	38.85	19.08				15.20				
	2-Wire Voice Grade Port (Centrex from diff Serving Wire Center)2 Basic Local Area			UEP93	UEPYM	1.36	104.41	67.93				15.20				
	2-Wire Voice Grade Port, Diff Serving Wire Center - 800 Service Term - Basic Local Area			UEP93	UEPYZ	1.36	104.41	67.93				15.20				
	2-Wire Voice Grade Port terminated in on Megalink or equivalent - Basic Local Area			UEP93	UEPY9	1.36	38.85	19.08				15.20				
	2-Wire Voice Grade Port Terminated on 800 Service Term - Basic Local Area			UEP93	UEPY2	1.36	38.85	19.08				15.20				
	2-Wire Voice Grade Port (Centrex)			UEP93	UEPQA	1.36	38.85	19.08				15.20				
	2-Wire Voice Grade Port (Centrex 800 termination)			UEP93	UEPQB	1.36	38.85	19.08				15.20				
	2-Wire Voice Grade Port (Centrex with Caller ID)1			UEP93	UEPQH	1.36	38.85	19.08				15.20				
	2-Wire Voice Grade Port (Centrex from diff Serving Wire Center)2			UEP93	UEPQM	1.36	104.41	67.93				15.20				
	2-Wire Voice Grade Port, Diff Serving Wire Center - 800 Service Term			UEP93	UEPQZ	1.36	104.41	67.93				15.20				
	2-Wire Voice Grade Port terminated in on Megalink or equivalent			UEP93	UEPQ9	1.36	38.85	19.08				15.20				
	2-Wire Voice Grade Port Terminated on 800 Service Term			UEP93	UEPQ2	1.36	38.85	19.08				15.20				
Local Switching																
	Centrex Intercom Funtionality, per port			UEP93	URECS	0.8577										
Local Number Portability																
	Local Number Portability (1 per port)			UEP93	LNPCC	0.35										
Features																
	All Standard Features Offered, per port			UEP93	UEPVF	0.00						15.20				
	All Centrex Control Features Offered, per port			UEP93	UEPVC	0.00						15.20				
NARS																
	Unbundled Network Access Register - Combination			UEP93	UARCX	0.00	0.00	0.00				15.20				
	Unbundled Network Access Register - Indial			UEP93	UAR1X	0.00	0.00	0.00				15.20				
	Unbundled Network Access Register - Outdial			UEP93	UAROX	0.00	0.00	0.00				15.20				
Miscellaneous Terminations																
2-Wire Trunk Side																
	Trunk Side Terminations, each			UEP93	CEND6	8.27	115.85	18.20				15.20				
4-Wire Digital (1.544 Megabits)																
	DS1 Circuit Terminations, each			UEP93	M1HD1	68.47	196.18	92.92				15.20				
	DS0 Channels Activated, Per Channel			UEP93	M1HDO	0.00	14.06					15.20				
Interoffice Channel Mileage - 2-Wire																
	Interoffice Channel Facilities Termination			UEP93	M1GBC	22.60	39.36	26.62				15.20				
	Interoffice Channel mileage, per mile or fraction of mile			UEP93	M1GBM	0.013										

UNBUNDLED NETWORK ELEMENTS - Louisiana														Attachment: 2		Exhibit: B	
CATEGORY		RATE ELEMENTS	Interim	Zone	BCS	USOC	RATES ($)					Svc Order Submitted Elec per LSR	Svc Order Submitted Manually per LSR	Incremental Charge - Manual Svc Order vs. Electronic-1st	Incremental Charge - Manual Svc Order vs. Electronic-Add'l	Incremental Charge - Manual Svc Order vs. Electronic-Disc 1st	Incremental Charge - Manual Svc Order vs. Electronic-Disc Add'l
							Rec	Nonrecurring		Nonrecurring Disconnect		OSS Rates($)					
								First	Add'l	First	Add'l	SOMEC	SOMAN	SOMAN	SOMAN	SOMAN	SOMAN
	Feature Activations (DS0) Centrex Loops on Channelized DS1 Service																
	D4 Channel Bank Feature Activations																
		Feature Activation on D-4 Channel Bank Centrex Loop Slot			UEP93	1PQWS	0.6497						15.20				
		Feature Activation on D-4 Channel Bank FX Line Side Loop Slot			UEP93	1PQW6	0.6497						15.20				
		Feature Activation on D-4 Channel Bank FX Trunk Side Loop Slot			UEP93	1PQW7	0.6497						15.20				
		Feature Activation on D-4 Channel Bank Centrex Loop Slot - Different Wire Center			UEP93	1PQWP	0.6497						15.20				
		Feature Activation on D-4 Channel Bank Private Line Loop Slot			UEP93	1PQWV	0.6497						15.20				
		Feature Activation on D-4 Channel Bank Tie Line/Trunk Loop Slot			UEP93	1PQWQ	0.6497						15.20				
		Feature Activation on D-4 Channel Bank WATS Loop Slot			UEP93	1PQWA	0.6497						15.20				
	Non-Recurring Charges (NRC) Associated with UNE-P Centrex																
		NRC Conversion Currently Combined Switch-As-Is with allowed changes, per port			UEP93	USAC2		0.10	0.10				15.20				
		Conversion of Existing Centrex Common Block, each			UEP93	USACN		36.66	16.10				15.20				
		New Centrex Standard Common Block			UEP93	M1ACS	0.00	680.40					15.20				
		New Centrex Customized Common Block			UEP93	M1ACC	0.00	680.40					15.20				
		NAR Establishment Charge, Per Occasion			UEP93	URECA	0.00	73.93					15.20				
	Note 1 - Required Port for Centrex Control in 1AESS, 5ESS & EWSD																
	Note 2 - Requres Interoffice Channel Mileage																
	Note 3 - Requires Specific Customer Premises Equipment																
UNBUNDLED CENTREX PORT/LOOP COMBINATIONS - MARKET RATES																	
	1. Market Rates are applied where BellSouth is not required by FCC and/or State Commission rule to provide Unbundled Local Switching or Switch Ports.																
	2. Recurring Charges for all Standard Centrex and Centrex Conrol Features are Included in the Market Rate																
	3. End Office and Tandem Switching Usage and Common Transport Usage rates in the Port section of this rate exhibit shall apply to all combinations of loop/port network elements except for UNE Coin Port/Loop Combinations.																
	4. The first and additional Port nonrecurring charges apply to Not Currently Combined Combos. For Currently Combined Combos, the nonrecurring charges shall be those identified in the Nonrecurring - Currently Combined sections. Additional NRCs may apply also and are categorized accordingly.																
	UNE-P CENTREX - 1AESS - (Valid in AL,FL,GA,KY,LA,MS,&TN only)																
	2-Wire VG Loop/2-Wire Voice Grade Port (Centrex) Combo																
	UNE Port/Loop Combination Rates (Non-Design)																
		2-Wire VG Loop/2-Wire Voice Grade Port (Centrex) Port Combo - Non-Design		1	UEP91		25.77										
		2-Wire VG Loop/2-Wire Voice Grade Port (Centrex)Port Combo - Non-Design		2	UEP91		36.39										
		2-Wire VG Loop/2-Wire Voice Grade Port (Centrex)Port Combo - Non-Design		3	UEP91		62.26										
	UNE Port/Loop Combination Rates (Design)																
		2-Wire VG Loop/2-Wire Voice Grade Port (Centrex) Port Combo - Design		1	UEP91		28.93										
		2-Wire VG Loop/2-Wire Voice Grade Port (Centrex)Port Combo - Design		2	UEP91		39.35										
		2-Wire VG Loop/2-Wire Voice Grade Port (Centrex)Port Combo - Design		3	UEP91		64.46										
	UNE Loop Rate																
		2-Wire Voice Grade Loop (SL 1) - Zone 1		1	UEP91	UECS1	11.77										
		2-Wire Voice Grade Loop (SL 1) - Zone 2		2	UEP91	UECS1	22.39										
		2-Wire Voice Grade Loop (SL 1) - Zone 3		3	UEP91	UECS1	48.26										
		2-Wire Voice Grade Loop (SL 2) - Zone 1		1	UEP91	UECS2	14.93										
		2-Wire Voice Grade Loop (SL 2) - Zone 2		2	UEP91	UECS2	25.35										
		2-Wire Voice Grade Loop (SL 2) - Zone 3		3	UEP91	UECS2	50.46										
	UNE Ports																
	All States (Except North Carolina and Sout Carolina)																
		2-Wire Voice Grade Port (Centrex) Basic Local Area			UEP91	UEPYA	14.00	50.00	25.00				15.20				
		2-Wire Voice Grade Port (Centrex 800 termination)Basic Local Area			UEP91	UEPYB	14.00	50.00	25.00				15.20				

UNBUNDLED NETWORK ELEMENTS - Louisiana														Attachment: 2		Exhibit: B	
CATEGORY		RATE ELEMENTS	Interim	Zone	BCS	USOC	RATES ($)					Svc Order Submitted Elec per LSR	Svc Order Submitted Manually per LSR	Incremental Charge - Manual Svc Order vs. Electronic-1st	Incremental Charge - Manual Svc Order vs. Electronic-Add'l	Incremental Charge - Manual Svc Order vs. Electronic-Disc 1st	Incremental Charge - Manual Svc Order vs. Electronic-Disc Add'l
							Rec	Nonrecurring		Nonrecurring Disconnect		OSS Rates($)					
								First	Add'l	First	Add'l	SOMEC	SOMAN	SOMAN	SOMAN	SOMAN	SOMAN
		2-Wire Voice Grade Port (Centrex with Caller ID)1Basic Local Area			UEP91	UEPYH	14.00	50.00	25.00				15.20				
		2-Wire Voice Grade Port (Centrex from diff Serving Wire Center)2 Basic Local Area			UEP91	UEPYM	14.00	135.00	90.00				15.20				
		2-Wire Voice Grade Port, Diff Serving Wire Center - 800 Service Term - Basic Local Area			UEP91	UEPYZ	14.00	135.00	90.00				15.20				
		2-Wire Voice Grade Port terminated in on Megalink or equivalent - Basic Local Area			UEP91	UEPY9	14.00	50.00	25.00				15.20				
		2-Wire Voice Grade Port Terminated on 800 Service Term - Basic Local Area			UEP91	UEPY2	14.00	50.00	25.00				15.20				
	AL, KY, LA, MS, & TN Only																
		2-Wire Voice Grade Port (Centrex)			UEP91	UEPQA	14.00	50.00	25.00				15.20				
		2-Wire Voice Grade Port (Centrex 800 termination)			UEP91	UEPQB	14.00	50.00	25.00				15.20				
		2-Wire Voice Grade Port (Centrex with Caller ID)1			UEP91	UEPQH	14.00	50.00	25.00				15.20				
		2-Wire Voice Grade Port (Centrex from diff Serving Wire Center)2			UEP91	UEPQM	14.00	135.00	90.00				15.20				
		2-Wire Voice Grade Port, Diff Serving Wire Center - 800 Service Term			UEP91	UEPQZ	14.00	135.00	90.00				15.20				
		2-Wire Voice Grade Port terminated in on Megalink or equivalent			UEP91	UEPQ9	14.00	50.00	25.00				15.20				
		2-Wire Voice Grade Port Terminated on 800 Service Term			UEP91	UEPQ2	14.00	50.00	25.00				15.20				
	Local Switching																
		Centrex Intercom Funtionality, per port			UEP91	URECS	0.8577										
	Local Number Portability																
		Local Number Portability (1 per port)			UEP91	LNPCC	0.35										
	Features																
		All Standard Features Offered, per port			UEP91	UEPVF	0.00										
		All Select Features Offered, per port			UEP91	UEPVS	0.00	412.25					15.20				
		All Centrex Control Features Offered, per port			UEP91	UEPVC	0.00										
	NARS																
		Unbundled Network Access Register - Combination			UEP91	UARCX	0.00	0.00	0.00				15.20				
		Unbundled Network Access Register - Indial			UEP91	UAR1X	0.00	0.00	0.00				15.20				
		Unbundled Network Access Register - Outdial			UEP91	UAROX	0.00	0.00	0.00				15.20				
	Miscellaneous Terminations																
	2-Wire Trunk Side																
		Trunk Side Terminations, each			UEP91	CENA6	8.29	115.85	18.20				15.20				
	Interoffice Channel Mileage - 2-Wire																
		Interoffice Channel Facilities Termination - Voice Grade			UEP91	M1GBC	22.60	39.36	26.62				15.20				
		Interoffice Channel mileage, per mile or fraction of mile			UEP91	M1GBM	0.013										
	Feature Activations (DS0) Centrex Loops on Channelized DS1 Service																
	D4 Channel Bank Feature Activations																
		Feature Activation on D-4 Channel Bank Centrex Loop Slot			UEP91	1PQWS	0.6497						15.20				
		Feature Activation on D-4 Channel Bank FX line Side Loop Slot			UEP91	1PQW6	0.6497						15.20				
		Feature Activation on D-4 Channel Bank FX Trunk Side Loop Slot			UEP91	1PQW7	0.6497						15.20				
		Feature Activation on D-4 Channel Bank Centrex Loop Slot - Different Wire Center			UEP91	1PQWP	0.6497						15.20				
		Feature Activation on D-4 Channel Bank Private Line Loop Slot			UEP91	1PQWV	0.6497						15.20				
		Feature Activation on D-4 Channel Bank Tjie Line/Trunk Loop Slot			UEP91	1PQWQ	0.6497						15.20				
		Feature Activation on D-4 Channel Bank WATS Loop Slot			UEP91	1PQWA	0.6497						15.20				
	Non-Recurring Charges (NRC) Associated with UNE-P Centrex																
		Conversion - Currently Combined Switch-As-Is with allowed changes, per port			UEP91	USAC2		0.10	0.10				15.20				
		Conversion of Existing Centrex Common Block			UEP91	USACN	0.00	36.66	16.10								
		New Centrex Standard Common Block			UEP91	M1ACS	0.00	680.40					15.20				
		New Centrex Customized Common Block			UEP91	M1ACC	0.00	680.40					15.20				

UNBUNDLED NETWORK ELEMENTS - Louisiana														Attachment: 2		Exhibit: B	
CATEGORY		RATE ELEMENTS	Interim	Zone	BCS	USOC	RATES ($)					Svc Order Submitted Elec per LSR	Svc Order Submitted Manually per LSR	Incremental Charge - Manual Svc Order vs. Electronic-1st	Incremental Charge - Manual Svc Order vs. Electronic-Add'l	Incremental Charge - Manual Svc Order vs. Electronic-Disc 1st	Incremental Charge - Manual Svc Order vs. Electronic-Disc Add'l
							Rec	Nonrecurring		Nonrecurring Disconnect		OSS Rates($)					
								First	Add'l	First	Add'l	SOMEC	SOMAN	SOMAN	SOMAN	SOMAN	SOMAN
		Secondary Block, per Block			UEP91	M2CC1	0.00	79.31					15.20				
		NAR Establishment Charge, Per Occasion			UEP91	URECA	0.00	73.93					15.20				
	UNE-P CENTREX - 5ESS (Valid in All States)																
	2-Wire VG Loop/2-Wire Voice Grade Port (Centrex) Combo																
	UNE Port/Loop Combination Rates (Non-Design)																
		2-Wire VG Loop/2-Wire Voice Grade Port (Centrex) Port Combo - Non-Design		1	UEP95		25.77										
		2-Wire VG Loop/2-Wire Voice Grade Port (Centrex)Port Combo - Non-Design		2	UEP95		36.39										
		2-Wire VG Loop/2-Wire Voice Grade Port (Centrex)Port Combo - Non-Design		3	UEP95		62.26										
	UNE Port/Loop Combination Rates (Design)																
		2-Wire VG Loop/2-Wire Voice Grade Port (Centrex) Port Combo - Design		1	UEP95		28.93										
		2-Wire VG Loop/2-Wire Voice Grade Port (Centrex)Port Combo - Design		2	UEP95		39.35										
		2-Wire VG Loop/2-Wire Voice Grade Port (Centrex)Port Combo - Design		3	UEP95		64.46										
	UNE Loop Rate																
		2-Wire Voice Grade Loop (SL 1) - Zone 1		1	UEP95	UECS1	11.77										
		2-Wire Voice Grade Loop (SL 1) - Zone 2		2	UEP95	UECS1	22.39										
		2-Wire Voice Grade Loop (SL 1) - Zone 3		3	UEP95	UECS1	48.26										
		2-Wire Voice Grade Loop (SL 2) - Zone 1		1	UEP95	UECS2	14.93										
		2-Wire Voice Grade Loop (SL 2) - Zone 2		2	UEP95	UECS2	25.35										
		2-Wire Voice Grade Loop (SL 2) - Zone 3		3	UEP95	UECS2	50.46										
	UNE Port Rate																
	All States																
		2-Wire Voice Grade Port (Centrex) Basic Local Area			UEP95	UEPYA	14.00	50.00	25.00				15.20				
		2-Wire Voice Grade Port (Centrex 800 termination)			UEP95	UEPYB	14.00	50.00	25.00				15.20				
		2-Wire Voice Grade Port (Centrex with Caller ID)1Basic Local Area			UEP95	UEPYH	14.00	50.00	25.00				15.20				
		2-Wire Voice Grade Port (Centrex from diff Serving Wire Center)2 Basic Local Area			UEP95	UEPYM	14.00	135.00	90.00				15.20				
		2-Wire Voice Grade Port, Diff Serving Wire Center - 800 Service Term - Basic Local Area			UEP95	UEPYZ	14.00	135.00	90.00				15.20				
		2-Wire Voice Grade Port terminated in on Megalink or equivalent - Basic Local Area			UEP95	UEPY9	14.00	50.00	25.00				15.20				
		2-Wire Voice Grade Port Terminated on 800 Service Term - Basic Local Area			UEP95	UEPY2	14.00	50.00	25.00				15.20				
	AL, KY, LA, MS, SC, & TN Only																
		2-Wire Voice Grade Port (Centrex)			UEP95	UEPQA	14.00	50.00	25.00				15.20				
		2-Wire Voice Grade Port (Centrex 800 termination)			UEP95	UEPQB	14.00	50.00	25.00				15.20				
		2-Wire Voice Grade Port (Centrex with Caller ID)1			UEP95	UEPQH	14.00	50.00	25.00				15.20				
		2-Wire Voice Grade Port (Centrex from diff Serving Wire Center)2			UEP95	UEPQM	14.00	135.00	90.00				15.20				
		2-Wire Voice Grade Port, Diff Serving Wire Center - 800 Service Term			UEP95	UEPQZ	14.00	135.00	90.00				15.20				
		2-Wire Voice Grade Port terminated in on Megalink or equivalent			UEP95	UEPQ9	14.00	50.00	25.00				15.20				
		2-Wire Voice Grade Port Terminated on 800 Service Term			UEP95	UEPQ2	14.00	50.00	25.00				15.20				
	Local Switching																
		Centrex Intercom Funtionality, per port			UEP95	URECS	0.8577						15.20				
	Local Number Portability																
		Local Number Portability (1 per port)			UEP95	LNPCC	0.35										
	Features																
		All Standard Features Offered, per port			UEP95	UEPVF	0.00						15.20				
		All Select Features Offered, per port			UEP95	UEPVS	0.00	412.25					15.20				
		All Centrex Control Features Offered, per port			UEP95	UEPVC	0.00						15.20				
	NARS																

UNBUNDLED NETWORK ELEMENTS - Louisiana													Attachment: 2		Exhibit: B	
CATEGORY	RATE ELEMENTS	Interim	Zone	BCS	USOC	RATES ($)					Svc Order Submitted Elec per LSR	Svc Order Submitted Manually per LSR	Incremental Charge - Manual Svc Order vs. Electronic-1st	Incremental Charge - Manual Svc Order vs. Electronic-Add'l	Incremental Charge - Manual Svc Order vs. Electronic-Disc 1st	Incremental Charge - Manual Svc Order vs. Electronic-Disc Add'l
						Rec	Nonrecurring		Nonrecurring Disconnect		OSS Rates($)					
							First	Add'l	First	Add'l	SOMEC	SOMAN	SOMAN	SOMAN	SOMAN	SOMAN
	Unbundled Network Access Register - Combination			UEP95	UARCX	0.00	0.00	0.00				15.20				
	Unbundled Network Access Register - Indial			UEP95	UAR1X	0.00	0.00	0.00				15.20				
	Unbundled Network Access Register - Outdial			UEP95	UAROX	0.00	0.00	0.00				15.20				
Miscellaneous Terminations																
2-Wire Trunk Side																
	Trunk Side Terminations, each			UEP95	CEND6	8.29	115.85	18.20				15.20				
4-Wire Digital (1.544 Megabits)																
	DS1 Circuit Terminations, each			UEP95	M1HD1	68.47	196.18	92.92				15.20				
	DS0 Channels Activated, each			UEP95	M1HDO	0.00	14.06					15.20				
Interoffice Channel Mileage - 2-Wire																
	Interoffice Channel Facilities Termination			UEP95	M1GBC	22.60	39.36	26.62				15.20				
	Interoffice Channel mileage, per mile or fraction of mile			UEP95	M1GBM	0.013										
Feature Activations (DS0) Centrex Loops on Channelized DS1 Service																
D4 Channel Bank Feature Activations																
	Feature Activation on D-4 Channel Bank Centrex Loop Slot			UEP95	1PQWS	0.6497						15.20				
	Feature Activation on D-4 Channel Bank FX line Side Loop Slot			UEP95	1PQW6	0.6497						15.20				
	Feature Activation on D-4 Channel Bank FX Trunk Side Loop Slot			UEP95	1PQW7	0.6497						15.20				
	Feature Activation on D-4 Channel Bank Centrex Loop Slot - Different Wire Center			UEP95	1PQWP	0.6497						15.20				
	Feature Activation on D-4 Channel Bank Private Line Loop Slot			UEP95	1PQWV	0.6497						15.20				
	Feature Activation on D-4 Channel Bank Tjie Line/Trunk Loop Slot			UEP95	1PQWQ	0.6497						15.20				
	Feature Activation on D-4 Channel Bank WATS Loop Slot			UEP95	1PQWA	0.6497						15.20				
Non-Recurring Charges (NRC) Associated with UNE-P Centrex																
	NRC Conversion Currently Combined Switch-As-Is with allowed changes, per port			UEP95	USAC2		0.10	0.10				15.20				
	Conversion of Existing Centrex Common Block, each			UEP95	USACN		36.66	16.10				15.20				
	New Centrex Standard Common Block			UEP95	M1ACS	0.00	680.40					15.20				
	New Centrex Customized Common Block			UEP95	M1ACC	0.00	680.40					15.20				
	NAR Establishment Charge, Per Occasion			UEP95	URECA	0.00	73.93					15.20				
UNE-P CENTREX - DMS100 (Valid in All States)																
2-Wire VG Loop/2-Wire Voice Grade Port (Centrex) Combo																
UNE Port/Loop Combination Rates (Non-Design)																
	2-Wire VG Loop/2-Wire Voice Grade Port (Centrex) Port Combo - Non-Design		1	UEP9D		25.77										
	2-Wire VG Loop/2-Wire Voice Grade Port (Centrex)Port Combo - Non-Design		2	UEP9D		36.39										
	2-Wire VG Loop/2-Wire Voice Grade Port (Centrex)Port Combo - Non-Design		3	UEP9D		62.26										
UNE Port/Loop Combination Rates (Design)																
	2-Wire VG Loop/2-Wire Voice Grade Port (Centrex) Port Combo - Design		1	UEP9D		28.93										
	2-Wire VG Loop/2-Wire Voice Grade Port (Centrex)Port Combo - Design		2	UEP9D		39.35										
	2-Wire VG Loop/2-Wire Voice Grade Port (Centrex)Port Combo - Design		3	UEP9D		64.46										
UNE Loop Rate																
	2-Wire Voice Grade Loop (SL 1) - Zone 1		1	UEP9D	UECS1	11.77										
	2-Wire Voice Grade Loop (SL 1) - Zone 2		2	UEP9D	UECS1	22.39										
	2-Wire Voice Grade Loop (SL 1) - Zone 3		3	UEP9D	UECS1	48.26										
	2-Wire Voice Grade Loop (SL 2) - Zone 1		1	UEP9D	UECS2	14.93										
	2-Wire Voice Grade Loop (SL 2) - Zone 2		2	UEP9D	UECS2	25.35										
	2-Wire Voice Grade Loop (SL 2) - Zone 3		3	UEP9D	UECS2	50.46										
UNE Port Rate																
ALL STATES																
	2-Wire Voice Grade Port (Centrex) Basic Local Area			UEP9D	UEPYA	14.00	50.00	25.00				15.20				

CATEGORY		RATE ELEMENTS	Interim	Zone	BCS	USOC	RATES ($)					Svc Order Submitted Elec per LSR	Svc Order Submitted Manually per LSR	Attachment: 2 Incremental Charge - Manual Svc Order vs. Electronic-1st	Attachment: 2 Incremental Charge - Manual Svc Order vs. Electronic-Add'l	Exhibit: B Incremental Charge - Manual Svc Order vs. Electronic-Disc 1st	Exhibit: B Incremental Charge - Manual Svc Order vs. Electronic-Disc Add'l
							Rec	Nonrecurring		Nonrecurring Disconnect		OSS Rates($)					
								First	Add'l	First	Add'l	SOMEC	SOMAN	SOMAN	SOMAN	SOMAN	SOMAN
		2-Wire Voice Grade Port (Centrex 800 termination)Basic Local Area			UEP9D	UEPYB	14.00	50.00	25.00				15.20				
		2-Wire Voice Grade Port (Centrex / EBS-PSET)3Basic Local Area			UEP9D	UEPYC	14.00	50.00	25.00				15.20				
		2-Wire Voice Grade Port (Centrex / EBS-M5009)3Basic Local Area			UEP9D	UEPYD	14.00	50.00	25.00				15.20				
		2-Wire Voice Grade Port (Centrex / EBS-M5209))3 Basic Local Area			UEP9D	UEPYE	14.00	50.00	25.00				15.20				
		2-Wire Voice Grade Port (Centrex / EBS-M5112))3 Basic Local Area			UEP9D	UEPYF	14.00	50.00	25.00				15.20				
		2-Wire Voice Grade Port (Centrex / EBS-M5312))3Basic Local Area			UEP9D	UEPYG	14.00	50.00	25.00				15.20				
		2-Wire Voice Grade Port (Centrex / EBS-M5008))3 Basic Local Area			UEP9D	UEPYT	14.00	50.00	25.00				15.20				
		2-Wire Voice Grade Port (Centrex / EBS-M5208))3 Basic Local Area			UEP9D	UEPYU	14.00	50.00	25.00				15.20				
		2-Wire Voice Grade Port (Centrex / EBS-M5216))3 Basic Local Area			UEP9D	UEPYV	14.00	50.00	25.00				15.20				
		2-Wire Voice Grade Port (Centrex / EBS-M5316))3 Basic Local Area			UEP9D	UEPY3	14.00	50.00	25.00				15.20				
		2-Wire Voice Grade Port (Centrex with Caller ID) Basic Local Area			UEP9D	UEPYH	14.00	50.00	25.00				15.20				
		2-Wire Voice Grade Port (Centrex/Caller ID/Msg Wtg Lamp Indication))3 Basic Local Area			UEP9D	UEPYW	14.00	50.00	25.00				15.20				
		2-Wire Voice Grade Port (Centrex/Msg Wtg Lamp Indication))3 Basic Local Area			UEP9D	UEPYJ	14.00	50.00	25.00				15.20				
		2-Wire Voice Grade Port (Centrex from diff Serving Wire Center) 2 Basic Local Area			UEP9D	UEPYM	14.00	135.00	90.00				15.20				
		2-Wire Voice Grade Port (Centrex/differ SWC /EBS-PSET)2, 3 Basic Local Area			UEP9D	UEPYO	14.00	135.00	90.00				15.20				
		2-Wire Voice Grade Port (Centrex/differ SWC /EBS-M5009)2, 3 Basic Local Area			UEP9D	UEPYP	14.00	135.00	90.00				15.20				
		2-Wire Voice Grade Port (Centrex/differ SWC /EBS-5209)2, 3 Basic Local Area			UEP9D	UEPYQ	14.00	135.00	90.00				15.20				
		2-Wire Voice Grade Port (Centrex/differ SWC /EBS-M5112)2, 3 Basic Local Area			UEP9D	UEPYR	14.00	135.00	90.00				15.20				
		2-Wire Voice Grade Port (Centrex/differ SWC /EBS-M5312)2, 3 Basic Local Area			UEP9D	UEPYS	14.00	135.00	90.00				15.20				
		2-Wire Voice Grade Port (Centrex/differ SWC /EBS-M5008)2, 3 Basic Local Area			UEP9D	UEPY4	14.00	135.00	90.00				15.20				
		2-Wire Voice Grade Port (Centrex/differ SWC /EBS-M5208)2, 3 Basic Local Area			UEP9D	UEPY5	14.00	135.00	90.00				15.20				
		2-Wire Voice Grade Port (Centrex/differ SWC /EBS-M5216)2, 3 Basic Local Area			UEP9D	UEPY6	14.00	135.00	90.00				15.20				
		2-Wire Voice Grade Port (Centrex/differ SWC /EBS-M5316)2, 3 Basic Local Area			UEP9D	UEPY7	14.00	135.00	90.00				15.20				
		2-Wire Voice Grade Port, Diff Serving Wire Center - 800 Service Term			UEP9D	UEPYZ	14.00	135.00	90.00				15.20				
		2-Wire Voice Grade Port terminated in on Megalink or equivalent Basic Local Area			UEP9D	UEPY9	14.00	50.00	25.00				15.20				
		2-Wire Voice Grade Port Terminated on 800 Service Term Basic Local Area			UEP9D	UEPY2	14.00	50.00	25.00				15.20				
	AL, KY, LA, MS, SC, & TN Only																
		2-Wire Voice Grade Port (Centrex)			UEP9D	UEPQA	14.00	50.00	25.00				15.20				
		2-Wire Voice Grade Port (Centrex 800 termination)			UEP9D	UEPQB	14.00	50.00	25.00				15.20				
		2-Wire Voice Grade Port (Centrex / EBS-PSET)3			UEP9D	UEPQC	14.00	50.00	25.00				15.20				
		2-Wire Voice Grade Port (Centrex / EBS-M5009)3			UEP9D	UEPQD	14.00	50.00	25.00				15.20				
		2-Wire Voice Grade Port (Centrex / EBS-M5209)3			UEP9D	UEPQE	14.00	50.00	25.00				15.20				
		2-Wire Voice Grade Port (Centrex / EBS-M5112)3			UEP9D	UEPQF	14.00	50.00	25.00				15.20				

UNBUNDLED NETWORK ELEMENTS - Louisiana														Attachment: 2		Exhibit: B	
CATEGORY		RATE ELEMENTS	Interim	Zone	BCS	USOC	RATES ($)					Svc Order Submitted Elec per LSR	Svc Order Submitted Manually per LSR	Incremental Charge - Manual Svc Order vs. Electronic-1st	Incremental Charge - Manual Svc Order vs. Electronic-Add'l	Incremental Charge - Manual Svc Order vs. Electronic-Disc 1st	Incremental Charge - Manual Svc Order vs. Electronic-Disc Add'l
							Rec	Nonrecurring		Nonrecurring Disconnect		OSS Rates($)					
								First	Add'l	First	Add'l	SOMEC	SOMAN	SOMAN	SOMAN	SOMAN	SOMAN
		2-Wire Voice Grade Port (Centrex / EBS-M5312)3			UEP9D	UEPQG	14.00	50.00	25.00				15.20				
		2-Wire Voice Grade Port (Centrex / EBS-M5008)3			UEP9D	UEPQT	14.00	50.00	25.00				15.20				
		2-Wire Voice Grade Port (Centrex / EBS-M5208)3			UEP9D	UEPQU	14.00	50.00	25.00				15.20				
		2-Wire Voice Grade Port (Centrex / EBS-M5216)3			UEP9D	UEPQV	14.00	50.00	25.00				15.20				
		2-Wire Voice Grade Port (Centrex / EBS-M5316)3			UEP9D	UEPQ3	14.00	50.00	25.00				15.20				
		2-Wire Voice Grade Port (Centrex with Caller ID)			UEP9D	UEPQH	14.00	50.00	25.00				15.20				
		2-Wire Voice Grade Port (Centrex/Caller ID/Msg Wtg Lamp Indication)3			UEP9D	UEPQW	14.00	50.00	25.00				15.20				
		2-Wire Voice Grade Port (Centrex/Msg Wtg Lamp Indication)3			UEP9D	UEPQJ	14.00	50.00	25.00				15.20				
		2-Wire Voice Grade Port (Centrex from diff Serving Wire Center) 2			UEP9D	UEPQM	14.00	135.00	90.00				15.20				
		2-Wire Voice Grade Port (Centrex/differ SWC /EBS-PSET)2, 3			UEP9D	UEPQO	14.00	135.00	90.00				15.20				
		2-Wire Voice Grade Port (Centrex/differ SWC /EBS-M5009)2, 3			UEP9D	UEPQP	14.00	135.00	90.00				15.20				
		2-Wire Voice Grade Port (Centrex/differ SWC /EBS-5209)2, 3			UEP9D	UEPQQ	14.00	135.00	90.00				15.20				
		2-Wire Voice Grade Port (Centrex/differ SWC /EBS-M5112)2, 3			UEP9D	UEPQR	14.00	135.00	90.00				15.20				
		2-Wire Voice Grade Port (Centrex/differ SWC /EBS-M5312)2, 3			UEP9D	UEPQS	14.00	135.00	90.00				15.20				
		2-Wire Voice Grade Port (Centrex/differ SWC /EBS-M5008)2, 3			UEP9D	UEPQ4	14.00	135.00	90.00				15.20				
		2-Wire Voice Grade Port (Centrex/differ SWC /EBS-M5208)2, 3			UEP9D	UEPQ5	14.00	135.00	90.00				15.20				
		2-Wire Voice Grade Port (Centrex/differ SWC /EBS-M5216)2, 3			UEP9D	UEPQ6	14.00	135.00	90.00				15.20				
		2-Wire Voice Grade Port (Centrex/differ SWC /EBS-M5316)2, 3			UEP9D	UEPQ7	14.00	135.00	90.00				15.20				
		2-Wire Voice Grade Port, Diff Serving Wire Center - 800 Service Term			UEP9D	UEPQZ	14.00	135.00	90.00				15.20				
		2-Wire Voice Grade Port terminated in on Megalink or equivalent			UEP9D	UEPQ9	14.00	50.00	25.00				15.20				
		2-Wire Voice Grade Port Terminated on 800 Service Term			UEP9D	UEPQ2	14.00	50.00	25.00				15.20				
	Local Switching																
		Centrex Intercom Funtionality, per port			UEP9D	URECS	0.8577										
	Local Number Portability																
		Local Number Portability (1 per port)			UEP9D	LNPCC	0.35										
	Features																
		All Standard Features Offered, per port			UEP9D	UEPVF	0.00						15.20				
		All Select Features Offered, per port			UEP9D	UEPVS	0.00	412.25					15.20				
		All Centrex Control Features Offered, per port			UEP9D	UEPVC	0.00						15.20				
	NARS																
		Unbundled Network Access Register - Combination			UEP9D	UARCX	0.00	0.00	0.00				15.20				
		Unbundled Network Access Register - Inward			UEP9D	UAR1X	0.00	0.00	0.00				15.20				
		Unbundled Network Access Register - Outdial			UEP9D	UAROX	0.00	0.00	0.00				15.20				
	Miscellaneous Terminations																
	2-Wire Trunk Side																
		Trunk Side Terminations, each			UEP9D	CEND6	8.29	115.85	18.20				15.20				
	4-Wire Digital (1.544 Megabits)																
		DS1 Circuit Terminations, each			UEP9D	M1HD1	68.47	196.18	98.62				15.20				
		DS0 Channels Activiated per Channel			UEP9D	M1HDO	0.00	14.06					15.20				
	Interoffice Channel Mileage - 2-Wire																
		Interoffice Channel Facilities Termination			UEP9D	M1GBC	22.60	39.36	26.62				15.20				
		Interoffice Channel mileage, per mile or fraction of mile			UEP9D	M1GBM	0.013										
	Feature Activations (DS0) Centrex Loops on Channelized DS1 Service																
	D4 Channel Bank Feature Activations																
		Feature Activation on D-4 Channel Bank Centrex Loop Slot			UEP9D	1PQWS	0.6497						15.20				
		Feature Activation on D-4 Channel Bank FX line Side Loop Slot			UEP9D	1PQW6	0.6497						15.20				

CATEGORY	RATE ELEMENTS	Interim	Zone	BCS	USOC	RATES ($)					Svc Order Submitted Elec per LSR	Svc Order Submitted Manually per LSR	Attachment: 2 Incremental Charge - Manual Svc Order vs. Electronic-1st	Attachment: 2 Incremental Charge - Manual Svc Order vs. Electronic-Add'l	Exhibit: B Incremental Charge - Manual Svc Order vs. Electronic-Disc 1st	Exhibit: B Incremental Charge - Manual Svc Order vs. Electronic-Disc Add'l
						Rec	Nonrecurring		Nonrecurring Disconnect		OSS Rates($)					
							First	Add'l	First	Add'l	SOMEC	SOMAN	SOMAN	SOMAN	SOMAN	SOMAN
	Feature Activation on D-4 Channel Bank FX Trunk Side Loop Slot			UEP9D	1PQW7	0.6497						15.20				
	Feature Activation on D-4 Channel Bank Centrex Loop Slot - Different Wire Center			UEP9D	1PQWP	0.6497						15.20				
	Feature Activation on D-4 Channel Bank Private Line Loop Slot			UEP9D	1PQWV	0.6497						15.20				
	Feature Activation on D-4 Channel Bank Tjie Line/Trunk Loop Slot			UEP9D	1PQWQ	0.6497						15.20				
	Feature Activation on D-4 Channel Bank WATS Loop Slot			UEP9D	1PQWA	0.6497						15.20				
Non-Recurring Charges (NRC) Associated with UNE-P Centrex																
	NRC Conversion Currently Combined Switch-As-Is with allowed changes, per port			UEP9D	USAC2		0.10	0.10				15.20				
	Conversion of existing Centrex Common Block, each			UEP9D	USACN		36.66	16.10				15.20				
	New Centrex Standard Common Block			UEP9D	M1ACS	0.00	680.40					15.20				
	New Centrex Customized Common Block			UEP9D	M1ACC	0.00	680.40					15.20				
	NAR Establishment Charge, Per Occasion			UEP9D	URECA	0.00	73.93					15.20				
UNE-P CENTREX - EWSD (Valid in AL, FL, KY, LA, MS & TN)																
2-Wire VG Loop/2-Wire Voice Grade Port (Centrex) Combo																
UNE Port/Loop Combination Rates (Non-Design)																
	2-Wire VG Loop/2-Wire Voice Grade Port (Centrex) Port Combo - Non-Design		1	UEP9E		25.77										
	2-Wire VG Loop/2-Wire Voice Grade Port (Centrex)Port Combo - Non-Design		2	UEP9E		36.39										
	2-Wire VG Loop/2-Wire Voice Grade Port (Centrex)Port Combo - Non-Design		3	UEP9E		62.26										
UNE Port/Loop Combination Rates (Design)																
	2-Wire VG Loop/2-Wire Voice Grade Port (Centrex) Port Combo - Design		1	UEP9E		28.93										
	2-Wire VG Loop/2-Wire Voice Grade Port (Centrex)Port Combo - Design		2	UEP9E		39.35										
	2-Wire VG Loop/2-Wire Voice Grade Port (Centrex)Port Combo - Design		3	UEP9E		64.46										
UNE Loop Rate																
	2-Wire Voice Grade Loop (SL 1) - Zone 1		1	UEP9E	UECS1	11.77										
	2-Wire Voice Grade Loop (SL 1) - Zone 2		2	UEP9E	UECS1	22.39										
	2-Wire Voice Grade Loop (SL 1) - Zone 3		3	UEP9E	UECS1	48.26										
	2-Wire Voice Grade Loop (SL 2) - Zone 1		1	UEP9E	UECS2	14.93										
	2-Wire Voice Grade Loop (SL 2) - Zone 2		2	UEP9E	UECS2	25.35										
	2-Wire Voice Grade Loop (SL 2) - Zone 3		3	UEP9E	UECS2	50.46										
UNE Port Rate																
AL, FL, KY, LA, MS, & TN only																
	2-Wire Voice Grade Port (Centrex) Basic Local Area			UEP9E	UEPYA	14.00	50.00	25.00				15.20				
	2-Wire Voice Grade Port (Centrex 800 termination)Basic Local Area			UEP9E	UEPYB	14.00	50.00	25.00				15.20				
	2-Wire Voice Grade Port (Centrex with Caller ID)1Basic Local Area			UEP9E	UEPYH	14.00	50.00	25.00				15.20				
	2-Wire Voice Grade Port (Centrex from diff Serving Wire Center)2 Basic Local Area			UEP9E	UEPYM	14.00	135.00	90.00				15.20				
	2-Wire Voice Grade Port, Diff Serving Wire Center - 800 Service Term - Basic Local Area			UEP9E	UEPYZ	14.00	135.00	90.00				15.20				
	2-Wire Voice Grade Port terminated in on Megalink or equivalent - Basic Local Area			UEP9E	UEPY9	14.00	50.00	25.00				15.20				
	2-Wire Voice Grade Port Terminated on 800 Service Term - Basic Local Area			UEP9E	UEPY2	14.00	50.00	25.00				15.20				
AL, KY, LA, MS, & TN Only																
	2-Wire Voice Grade Port (Centrex)			UEP9E	UEPQA	14.00	50.00	25.00				15.20				
	2-Wire Voice Grade Port (Centrex 800 termination)			UEP9E	UEPQB	14.00	50.00	25.00				15.20				
	2-Wire Voice Grade Port (Centrex with Caller ID)1			UEP9E	UEPQH	14.00	50.00	25.00				15.20				

CATEGORY	RATE ELEMENTS	Interim	Zone	BCS	USOC	RATES ($) Rec	Nonrecurring First	Nonrecurring Add'l	Nonrecurring Disconnect First	Nonrecurring Disconnect Add'l	Svc Order Submitted Elec per LSR SOMEC	Svc Order Submitted Manually per LSR SOMAN	Attachment: 2 Incremental Charge - Manual Svc Order vs. Electronic-1st SOMAN	Attachment: 2 Incremental Charge - Manual Svc Order vs. Electronic-Add'l SOMAN	Exhibit: B Incremental Charge - Manual Svc Order vs. Electronic-Disc 1st SOMAN	Exhibit: B Incremental Charge - Manual Svc Order vs. Electronic-Disc Add'l SOMAN
											OSS Rates($)					
	2-Wire Voice Grade Port (Centrex from diff Serving Wire Center)2			UEP9E	UEPQM	14.00	135.00	90.00				15.20				
	2-Wire Voice Grade Port, Diff Serving Wire Center - 800 Service Term			UEP9E	UEPQZ	14.00	135.00	90.00				15.20				
	2-Wire Voice Grade Port terminated in on Megalink or equivalent			UEP9E	UEPQ9	14.00	50.00	25.00				15.20				
	2-Wire Voice Grade Port Terminated on 800 Service Term			UEP9E	UEPQ2	14.00	50.00	25.00				15.20				
Local Switching																
	Centrex Intercom Funtionality, per port			UEP9E	URECS	0.8577										
Local Number Portability																
	Local Number Portability (1 per port)			UEP9E	LNPCC	0.35										
Features																
	All Standard Features Offered, per port			UEP9E	UEPVF	0.00						15.20				
	All Select Features Offered, per port			UEP9E	UEPVS	0.00	412.25					15.20				
	All Centrex Control Features Offered, per port			UEP9E	UEPVC	0.00						15.20				
NARS																
	Unbundled Network Access Register - Combination			UEP9E	UARCX	0.00	0.00	0.00								
	Unbundled Network Access Register - Indial			UEP9E	UAR1X	0.00	0.00	0.00								
	Unbundled Network Access Register - Outdial			UEP9E	UAROX	0.00	0.00	0.00								
Miscellaneous Terminations																
2-Wire Trunk Side																
	Trunk Side Terminations, each			UEP9E	CEND6	8.29	115.85	18.20				15.20				
4-Wire Digital (1.544 Megabits)																
	DS1 Circuit Terminations, each			UEP9E	M1HD1	68.47	196.18	92.92				15.20				
	DS0 Channel Activated Per Channel			UEP9E	M1HDO	0.00	14.06					15.20				
Interoffice Channel Mileage - 2-Wire																
	Interoffice Channel Facilities Termination			UEP9E	M1GBC	22.60	39.36	26.62				15.20				
	Interoffice Channel mileage, per mile or fraction of mile			UEP9E	M1GBM	0.013										
Feature Activations (DS0) Centrex Loops on Channelized DS1 Service																
D4 Channel Bank Feature Activations																
	Feature Activation on D-4 Channel Bank Centrex Loop Slot			UEP9E	1PQWS	0.6497						15.20				
	Feature Activation on D-4 Channel Bank FX line Side Loop Slot			UEP9E	1PQW6	0.6497						15.20				
	Feature Activation on D-4 Channel Bank FX Trunk Side Loop Slot			UEP9E	1PQW7	0.6497						15.20				
	Feature Activation on D-4 Channel Bank Centrex Loop Slot - Different Wire Center			UEP9E	1PQWP	0.6497						15.20				
	Feature Activation on D-4 Channel Bank Private Line Loop Slot			UEP9E	1PQWV	0.6497						15.20				
	Feature Activation on D-4 Channel Bank Tjie Line/Trunk Loop Slot			UEP9E	1PQWQ	0.6497						15.20				
	Feature Activation on D-4 Channel Bank WATS Loop Slot			UEP9E	1PQWA	0.6497						15.20				
Non-Recurring Charges (NRC) Associated with UNE-P Centrex																
	NRC Conversion Currently Combined Switch-As-Is with allowed changes, per port			UEP9E	USAC2		0.10	0.10				15.20				
	Conversion of Existing Centrex Common Block, each			UEP9E	USACN		36.66	16.10				15.20				
	New Centrex Standard Common Block			UEP9E	M1ACS	0.00	680.40					15.20				
	New Centrex Customized Common Block			UEP9E	M1ACC	0.00	680.40					15.20				
	NAR Establishment Charge, Per Occasion			UEP9E	URECA	0.00	73.93					15.20				
UNE-P CENTREX - DCO - Valid in AL, KY, LA, MS, & TN)																
2-Wire VG Loop/2-Wire Voice Grade Port (Centrex) Combo																
UNE Port/Loop Combination Rates (Non-Design)																
	2-Wire VG Loop/2-Wire Voice Grade Port (Centrex) Port Combo - Non-Design		1	UEP93		25.77										
	2-Wire VG Loop/2-Wire Voice Grade Port (Centrex)Port Combo - Non-Design		2	UEP93		36.36										
	2-Wire VG Loop/2-Wire Voice Grade Port (Centrex)Port Combo - Non-Design		3	UEP93		62.26										
UNE Port/Loop Combination Rates (Design)																

CATEGORY	RATE ELEMENTS	Interim	Zone	BCS	USOC	RATES ($) Rec	Nonrecurring First	Nonrecurring Add'l	Nonrecurring Disconnect First	Nonrecurring Disconnect Add'l	Svc Order Submitted Elec per LSR SOMEC	Svc Order Submitted Manually per LSR SOMAN	Attachment: 2 Incremental Charge - Manual Svc Order vs. Electronic-1st SOMAN	Attachment: 2 Incremental Charge - Manual Svc Order vs. Electronic-Add'l SOMAN	Exhibit: B Incremental Charge - Manual Svc Order vs. Electronic-Disc 1st SOMAN	Exhibit: B Incremental Charge - Manual Svc Order vs. Electronic-Disc Add'l SOMAN
							OSS Rates($)									
	2-Wire VG Loop/2-Wire Voice Grade Port (Centrex) Port Combo - Design		1	UEP93		28.93										
	2-Wire VG Loop/2-Wire Voice Grade Port (Centrex)Port Combo - Design		2	UEP93		39.35										
	2-Wire VG Loop/2-Wire Voice Grade Port (Centrex)Port Combo - Design		3	UEP93		64.46										
UNE Loop Rate																
	2-Wire Voice Grade Loop (SL 1) - Zone 1		1	UEP93	UECS1	11.77										
	2-Wire Voice Grade Loop (SL 1) - Zone 2		2	UEP93	UECS1	22.36										
	2-Wire Voice Grade Loop (SL 1) - Zone 3		3	UEP93	UECS1	48.26										
	2-Wire Voice Grade Loop (SL 2) - Zone 1		1	UEP93	UECS2	14.93										
	2-Wire Voice Grade Loop (SL 2) - Zone 2		2	UEP93	UECS2	25.35										
	2-Wire Voice Grade Loop (SL 2) - Zone 3		3	UEP93	UECS2	50.46										
UNE Port Rate																
AL, KY, LA, MS, & TN only																
	2-Wire Voice Grade Port (Centrex) Basic Local Area			UEP93	UEPYA	14.00	50.00	25.00				15.20				
	2-Wire Voice Grade Port (Centrex 800 termination)Basic Local Area			UEP93	UEPYB	14.00	50.00	25.00				15.20				
	2-Wire Voice Grade Port (Centrex with Caller ID)1Basic Local Area			UEP93	UEPYH	14.00	50.00	25.00				15.20				
	2-Wire Voice Grade Port (Centrex from diff Serving Wire Center)2 Basic Local Area			UEP93	UEPYM	14.00	135.00	90.00				15.20				
	2-Wire Voice Grade Port, Diff Serving Wire Center - 800 Service Term - Basic Local Area			UEP93	UEPYZ	14.00	135.00	90.00				15.20				
	2-Wire Voice Grade Port terminated in on Megalink or equivalent - Basic Local Area			UEP93	UEPY9	14.00	50.00	25.00				15.20				
	2-Wire Voice Grade Port Terminated on 800 Service Term - Basic Local Area			UEP93	UEPY2	14.00	50.00	25.00				15.20				
	2-Wire Voice Grade Port (Centrex)			UEP93	UEPQA	14.00	50.00	25.00				15.20				
	2-Wire Voice Grade Port (Centrex 800 termination)			UEP93	UEPQB	14.00	50.00	25.00				15.20				
	2-Wire Voice Grade Port (Centrex with Caller ID)1			UEP93	UEPQH	14.00	50.00	25.00				15.20				
	2-Wire Voice Grade Port (Centrex from diff Serving Wire Center)2			UEP93	UEPQM	14.00	135.00	90.00				15.20				
	2-Wire Voice Grade Port, Diff Serving Wire Center - 800 Service Term			UEP93	UEPQZ	14.00	135.00	90.00				15.20				
	2-Wire Voice Grade Port terminated in on Megalink or equivalent			UEP93	UEPQ9	14.00	50.00	25.00				15.20				
	2-Wire Voice Grade Port Terminated on 800 Service Term			UEP93	UEPQ2	14.00	50.00	25.00				15.20				
Local Switching																
	Centrex Intercom Funtionality, per port			UEP93	URECS	0.8577										
Local Number Portability																
	Local Number Portability (1 per port)			UEP93	LNPCC	0.35										
Features																
	All Standard Features Offered, per port			UEP93	UEPVF	0.00						15.20				
	All Centrex Control Features Offered, per port			UEP93	UEPVC	0.00						15.20				
NARS																
	Unbundled Network Access Register - Combination			UEP93	UARCX	0.00	0.00	0.00				15.20				
	Unbundled Network Access Register - Indial			UEP93	UAR1X	0.00	0.00	0.00				15.20				
	Unbundled Network Access Register - Outdial			UEP93	UAROX	0.00	0.00	0.00				15.20				
Miscellaneous Terminations																
2-Wire Trunk Side																
	Trunk Side Terminations, each			UEP93	CEND6	8.27	115.85	18.20				15.20				
4-Wire Digital (1.544 Megabits)																
	DS1 Circuit Terminations, each			UEP93	M1HD1	68.47	196.18	92.92				15.20				
	DS0 Channels Activated, Per Channel			UEP93	M1HDO	0.00	14.06					15.20				
Interoffice Channel Mileage - 2-Wire																
	Interoffice Channel Facilities Termination			UEP93	M1GBC	22.60	39.36	26.62				15.20				
	Interoffice Channel mileage, per mile or fraction of mile			UEP93	M1GBM	0.013										
Feature Activations (DS0) Centrex Loops on Channelized DS1 Service																

UNBUNDLED NETWORK ELEMENTS - Louisiana														Attachment: 2		Exhibit: B	
CATEGORY		RATE ELEMENTS	Interim	Zone	BCS	USOC	RATES ($)					Svc Order Submitted Elec per LSR	Svc Order Submitted Manually per LSR	Incremental Charge - Manual Svc Order vs. Electronic-1st	Incremental Charge - Manual Svc Order vs. Electronic-Add'l	Incremental Charge - Manual Svc Order vs. Electronic-Disc 1st	Incremental Charge - Manual Svc Order vs. Electronic-Disc Add'l
							Rec	Nonrecurring		Nonrecurring Disconnect		OSS Rates($)					
								First	Add'l	First	Add'l	SOMEC	SOMAN	SOMAN	SOMAN	SOMAN	SOMAN
	D4 Channel Bank Feature Activations																
		Feature Activation on D-4 Channel Bank Centrex Loop Slot			UEP93	1PQWS	0.6497						15.20				
		Feature Activation on D-4 Channel Bank FX Line Side Loop Slot			UEP93	1PQW6	0.6497						15.20				
		Feature Activation on D-4 Channel Bank FX Trunk Side Loop Slot			UEP93	1PQW7	0.6497						15.20				
		Feature Activation on D-4 Channel Bank Centrex Loop Slot - Different Wire Center			UEP93	1PQWP	0.6497						15.20				
		Feature Activation on D-4 Channel Bank Private Line Loop Slot			UEP93	1PQWV	0.6497						15.20				
		Feature Activation on D-4 Channel Bank Tie Line/Trunk Loop Slot			UEP93	1PQWQ	0.6497						15.20				
		Feature Activation on D-4 Channel Bank WATS Loop Slot			UEP93	1PQWA	0.6497						15.20				
	Non-Recurring Charges (NRC) Associated with UNE-P Centrex																
		NRC Conversion Currently Combined Switch-As-Is with allowed changes, per port			UEP93	USAC2		0.10	0.10				15.20				
		Conversion of Existing Centrex Common Block, each			UEP93	USACN		36.66	16.10				15.20				
		New Centrex Standard Common Block			UEP93	M1ACS	0.00	680.40					15.20				
		New Centrex Customized Common Block			UEP93	M1ACC	0.00	680.40					15.20				
		NAR Establishment Charge, Per Occasion			UEP93	URECA	0.00	73.93					15.20				
	Note 1 - Required Port for Centrex Control in 1AESS, 5ESS & EWSD																
	Note 2 - Requres Interoffice Channel Mileage																
	Note 3 - Requires Specific Customer Premises Equipment																
	Note: Rates displaying an "R" in Interim column are interim and subject to rate true-up as set forth in General Terms and Conditions.																

UNBUNDLED NETWORK ELEMENTS - Mississippi													Attachment: 2		Exhibit: B	
CATEGORY	RATE ELEMENTS	Interim	Zone	BCS	USOC	RATES ($)					Svc Order Submitted Elec per LSR	Svc Order Submitted Manually per LSR	Incremental Charge - Manual Svc Order vs. Electronic-1st	Incremental Charge - Manual Svc Order vs. Electronic-Add'l	Incremental Charge - Manual Svc Order vs. Electronic-Disc 1st	Incremental Charge - Manual Svc Order vs. Electronic-Disc Add'l
						Rec	Nonrecurring		Nonrecurring Disconnect		OSS Rates($)					
							First	Add'l	First	Add'l	SOMEC	SOMAN	SOMAN	SOMAN	SOMAN	SOMAN
	The "Zone" shown in the sections for stand-alone loops or loops as part of a combination refers to Geographically Deaveraged UNE Zones. To view Geographically Deaveraged UNE Zone Designations by Central Office, refer to internet Website: http://www.interconnection.bellsouth.com/become_a_clec/html/interconnection.htm															
OPERATIONAL SUPPORT SYSTEMS																
	NOTE: (1) Electronic Service Order: CLEC should contact its contract negotiator if it prefers the state specific electronic service ordering charges as ordered by the State Commissions. The electronic service ordering charge currently contained in this rate exhibit is the BellSouth regional electronic service ordering charge. CLEC may elect either the state specific Commission ordered rates for the electronic service ordering charges, or CLEC may elect the regional electronic service ordering charge.															
	NOTE: (2) Any element that can be ordered electronically will be billed according to the SOMEC rate listed in this category. Please refer to BellSouth's Business Rules for Local Ordering (BBR-LO) to determine if a product can be ordered electronically. For those elements that cannot be ordered electronically at present per the BBR-LO, the listed SOMEC rate in this category reflects the charge that would be billed to a CLEC once electronic ordering capabilities come on-line for that element. Otherwise, the manual ordering charge, SOMAN, will be applied to a CLECs bill when it submits an LSR to BellSouth.															
	Manual Service Order Charge, per LSR, Disconnect Only (MS)				SOMAN				1.97							
	Electronic OSS Charge, per LSR, submitted via BST's OSS interactive interfaces (Regional)				SOMEC		3.50									
UNE SERVICE DATE ADVANCEMENT CHARGE																
	NOTE: The Expedite charge will be maintained commensurate with BellSouth's FCC No.1 Tariff, Section 5 as applicable.															
	UNE Expedite Charge per Circuit or Line Assignable USOC, per Day			UAL, UEANL, UCL, UEF, UDF, UEQ, UDL, UENTW, UDN, UEA, UHL, ULC, USL, U1T12, U1T48, U1TD1, U1TD3, U1TDX, U1TO3, U1TS1, U1TVX, UC1BC, UC1BL, UC1CC, UC1CL, UC1DC, UC1DL, UC1EC, UC1EL, UC1FC, UC1FL, UC1GC, UC1GL, UC1HC, UC1HL, UDL12, UDL48, UDLO3, UDLSX, UE3, ULD12, ULD48, ULDD1, ULDD3, ULDDX, ULDO3, ULDS1, ULDVX, UNC1X, UNC3X, UNCDX, UNCNX, UNCSX, UNCVX, UNLD1, UNLD3, UXTD1, UXTD3, UXTS1, U1TUC, U1TUD, U1TUB, U1TUA	SDASP		200.00									
UNBUNDLED EXCHANGE ACCESS LOOP																
	2-WIRE ANALOG VOICE GRADE LOOP															
	2-Wire Analog Voice Grade Loop - Service Level 1- Zone 1		1	UEANL	UEAL2	12.03	37.92	17.55	23.48	5.25		15.75				
	2-Wire Analog Voice Grade Loop - Service Level 1- Zone 2		2	UEANL	UEAL2	16.87	37.92	17.55	23.48	5.25		15.75				
	2-Wire Analog Voice Grade Loop - Service Level 1- Zone 3		3	UEANL	UEAL2	25.68	37.92	17.55	23.48	5.25		15.75				
	2-Wire Analog Voice Grade Loop - Service Level 1-Zone 4		4	UEANL	UEAL2	43.85	37.92	17.55	23.48	5.25		15.75				
	Unbundled Miscellaneous Rate Element, Tag Loop at End User Premise			UEANL	URETL		8.33	0.83				15.75				
	Loop Testing - Basic 1st Half Hour			UEANL	URET1		34.36					15.75				
	Loop Testing - Basic Additional Half Hour			UEANL	URETA		19.97					15.75				
	CLEC to CLEC Conversion Charge Without Outside Dispatch			UEANL	UREWO		15.75	8.92				15.75				
	Unbundled Voice Loop, Non-Design Voice Loop, billing for BST providing make-up (Engineering Information - E.I.)			UEANL	UEANM		13.51	13.51								
	Manual Order Coordination for UVL-SL1s (per loop)			UEANL	UEAMC		8.20	8.20								

CATEGORY	RATE ELEMENTS	Interim	Zone	BCS	USOC	RATES ($)					Svc Order Submitted Elec per LSR	Svc Order Submitted Manually per LSR	Attachment: 2 Incremental Charge - Manual Svc Order vs. Electronic-1st	Attachment: 2 Incremental Charge - Manual Svc Order vs. Electronic-Add'l	Exhibit: B Incremental Charge - Manual Svc Order vs. Electronic-Disc 1st	Exhibit: B Incremental Charge - Manual Svc Order vs. Electronic-Disc Add'l
						Rec	Nonrecurring		Nonrecurring Disconnect		OSS Rates($)					
							First	Add'l	First	Add'l	SOMEC	SOMAN	SOMAN	SOMAN	SOMAN	SOMAN
	Order Coordination for Specified Conversion Time for UVL-SL1 (per LSR)			UEANL	OCOSL		18.19	18.19								
2-WIRE Unbundled COPPER LOOP																
	2-Wire Unbundled Copper Loop - Non-Designed Zone 1	I	1	UEQ	UEQ2X	11.01	36.53	16.16	22.66	4.42		15.75				
	2 Wire Unbundled Copper Loop - Non-Designed - Zone 2	I	2	UEQ	UEQ2X	11.51	36.53	16.16	22.66	4.42		15.75				
	2 Wire Unbundled Copper Loop - Non-Designed - Zone 3	I	3	UEQ	UEQ2X	11.57	36.53	16.16	22.66	4.42		15.75				
	2 Wire Unbundled Copper Loop - Non-Designed - Zone 4	I	4	UEQ	UEQ2X	13.10	36.53	16.16	22.66	4.42		15.75				
	Unbundled Miscellaneous Rate Element, Tag Loop at End User Premise			UEQ	URETL		8.33	0.83				15.75				
	Order Coordination 2 Wire Unbundled Copper Loop - Non-Designed (per loop)			UEQ	USBMC		8.20	8.20								
	Unbundled Copper Loop, Non-Design Copper Loop, billing for BST providing make-up (Engineering Information - E.I.)			UEQ	UEQMU		13.51	13.51								
	Loop Testing - Basic 1st Half Hour			UEQ	URET1		34.36					15.75				
	Loop Testing - Basic Additional Half Hour			UEQ	URETA		19.97					15.75				
	CLEC to CLEC Conversion Charge Without Outside Dispatch			UEQ	UREWO		14.24	7.42				15.75				
UNBUNDLED EXCHANGE ACCESS LOOP																
2-WIRE ANALOG VOICE GRADE LOOP																
	2 Wire Analog Voice Grade Loop-Service Level 1-Line Splitting-Zone 1		1	UEPSR UEPSB	UEALS	12.03	37.92	17.55	23.48	5.25		15.75				
	2 Wire Analog Voice Grade Loop-Service Level 1-Line Splitting-Zone 1		1	UEPSR UEPSB	UEABS	12.03	37.92	17.55	23.48	5.25		15.75				
	2 Wire Analog Voice Grade Loop- Service Level 1-Line Splitting-Zone 2		2	UEPSR UEPSB	UEALS	16.87	37.92	17.55	23.48	5.25		15.75				
	2 Wire Analog Voice Grade Loop- Service Level 1-Line Splitting-Zone 2		2	UEPSR UEPSB	UEABS	16.87	37.92	17.55	23.48	5.25		15.75				
	2 Wire Analog Voice Grade Loop-Service Level 1-Line Splitting-Zone 3		3	UEPSR UEPSB	UEALS	25.68	37.92	17.55	23.48	5.25		15.75				
	2 Wire Analog Voice Grade Loop-Service Level 1-Line Splitting-Zone 3		3	UEPSR UEPSB	UEABS	25.68	37.92	17.55	23.48	5.25		15.75				
	2 Wire Analog Voice Grade Loop-Service Level 1-Line Splitting-Zone 4		4	UEPSR UEPSB	UEALS	43.85	37.92	17.55	23.48	5.25		15.75				
	2 Wire Analog Voice Grade Loop-Service Level 1-Line Splitting-Zone 4		4	UEPSR UEPSB	UEABS	43.85	37.92	17.55	23.48	5.25		15.75				
UNBUNDLED EXCHANGE ACCESS LOOP																
2-WIRE ANALOG VOICE GRADE LOOP																
	2-Wire Analog Voice Grade Loop - Service Level 2 w/Loop or Ground Start Signaling - Zone 1		1	UEA	UEAL2	13.89	105.96	68.28	52.82	10.37		15.75				
	2-Wire Analog Voice Grade Loop - Service Level 2 w/Loop or Ground Start Signaling - Zone 2		2	UEA	UEAL2	18.75	105.96	68.28	52.82	10.37		15.75				
	2-Wire Analog Voice Grade Loop - Service Level 2 w/Loop or Ground Start Signaling - Zone 3		3	UEA	UEAL2	27.55	105.96	68.28	52.82	10.37		15.75				
	2-Wire Analog Voice Grade Loop - Service Level 2 w/Loop or Ground Start Signaling - Zone 4		4	UEA	UEAL2	45.72	105.96	68.28	52.82	10.37		15.75				
	Order Coordination for Specified Conversion Time (per LSR)			UEA	OCOSL		18.19									
	2-Wire Analog Voice Grade Loop - Service Level 2 w/Reverse Battery Signaling - Zone 1		1	UEA	UEAR2	13.89	105.96	68.28	52.82	10.37		15.75				
	2-Wire Analog Voice Grade Loop - Service Level 2 w/Reverse Battery Signaling - Zone 2		2	UEA	UEAR2	18.75	105.96	68.28	52.82	10.37		15.75				
	2-Wire Analog Voice Grade Loop - Service Level 2 w/Reverse Battery Signaling - Zone 3		3	UEA	UEAR2	27.55	105.96	68.28	52.82	10.37		15.75				
	2-Wire Analog Voice Grade Loop - Service Level 2 w/Reverse Battery Signaling - Zone 4		4	UEA	UEAR2	45.72	105.96	68.28	52.82	10.37		15.75				
	Order Coordination for Specified Conversion Time (per LSR)			UEA	OCOSL		18.19									
	CLEC to CLEC Conversion Charge without outside dispatch			UEA	UREWO		87.56	36.29				15.75				
	Loop Tagging - Service Level 2 (SL2)			UEA	URETL		11.19	1.10				15.75				
4-WIRE ANALOG VOICE GRADE LOOP																
	4-Wire Analog Voice Grade Loop - Zone 1		1	UEA	UEAL4	27.47	132.27	94.59	60.68	14.64		15.75				
	4-Wire Analog Voice Grade Loop - Zone 2		2	UEA	UEAL4	38.26	132.27	94.59	60.68	14.64		15.75				

UNBUNDLED NETWORK ELEMENTS - Mississippi														Attachment: 2		Exhibit: B	
CATEGORY	RATE ELEMENTS	Interim	Zone	BCS	USOC	RATES ($)					Svc Order Submitted Elec per LSR	Svc Order Submitted Manually per LSR	Incremental Charge - Manual Svc Order vs. Electronic-1st	Incremental Charge - Manual Svc Order vs. Electronic-Add'l	Incremental Charge - Manual Svc Order vs. Electronic-Disc 1st	Incremental Charge - Manual Svc Order vs. Electronic-Disc Add'l
						Rec	Nonrecurring		Nonrecurring Disconnect		OSS Rates($)					
							First	Add'l	First	Add'l	SOMEC	SOMAN	SOMAN	SOMAN	SOMAN	SOMAN
	4-Wire Analog Voice Grade Loop - Zone 3		3	UEA	UEAL4	50.03	132.27	94.59	60.68	14.64		15.75				
	4-Wire Analog Voice Grade Loop - Zone 4		4	UEA	UEAL4	50.03	132.27	94.59	60.68	14.64		15.75				
	Order Coordination for Specified Conversion Time (per LSR)			UEA	OCOSL		18.19									
	CLEC to CLEC Conversion Charge without outside dispatch			UEA	UREWO		87.56	36.29				15.75				
2-WIRE ISDN DIGITAL GRADE LOOP																
	2-Wire ISDN Digital Grade Loop - Zone 1		1	UDN	U1L2X	21.01	117.61	79.92	52.82	10.37		15.75				
	2-Wire ISDN Digital Grade Loop - Zone 2		2	UDN	U1L2X	27.59	117.61	79.92	52.82	10.37		15.75				
	2-Wire ISDN Digital Grade Loop - Zone 3		3	UDN	U1L2X	37.34	117.61	79.92	52.82	10.37		15.75				
	2-Wire ISDN Digital Grade Loop - Zone 4		4	UDN	U1L2X	59.18	117.61	79.92	52.82	10.37		15.75				
	Order Coordination For Specified Conversion Time (per LSR)			UDN	OCOSL		18.19									
	CLEC to CLEC Conversion Charge without outside dispatch			UDN	UREWO		91.46	44.07				15.75				
2-WIRE Universal Digital Channel (UDC) COMPATIBLE LOOP																
	2-Wire Universal Digital Channel (UDC) Compatible Loop - Zone 1		1	UDC	UDC2X	21.01	117.61	79.92	52.82	10.37		15.75				
	2-Wire Universal Digital Channel (UDC) Compatible Loop - Zone 2		2	UDC	UDC2X	27.59	117.61	79.92	52.82	10.37		15.75				
	2-Wire Universal Digital Channel (UDC) Compatible Loop - Zone 3		3	UDC	UDC2X	37.34	117.61	79.92	52.82	10.37		15.75				
	2-Wire Universal Digital Channel (UDC) Compatible Loop - Zone 4		4	UDC	UDC2X	59.18	117.61	79.92	52.82	10.37		15.75				
	CLEC to CLEC Conversion Charge without outside dispatch *			UDC	UREWO		91.46	44.07				15.75				
2-WIRE ASYMMETRICAL DIGITAL SUBSCRIBER LINE (ADSL) COMPATIBLE LOOP																
	2 Wire Unbundled ADSL Loop including manual service inquiry & facility reservation - Zone 1		1	UAL	UAL2X	11.11	121.27	70.81	50.38	7.93		15.75				
	2 Wire Unbundled ADSL Loop including manual service inquiry & facility reservation - Zone 2		2	UAL	UAL2X	11.47	121.27	70.81	50.38	7.93		15.75				
	2 Wire Unbundled ADSL Loop including manual service inquiry & facility reservation - Zone 3		3	UAL	UAL2X	11.74	121.27	70.81	50.38	7.93		15.75				
	2 Wire Unbundled ADSL Loop including manual service inquiry & facility reservation - Zone 4		4	UAL	UAL2X	12.69	121.27	70.81	50.38	7.93		15.75				
	Order Coordination for Specified Conversion Time (per LSR)			UAL	OCOSL		18.19									
	2 Wire Unbundled ADSL Loop without manual service inquiry & facility reservaton - Zone 1		1	UAL	UAL2W	11.11	96.15	58.03	50.38	7.93		15.75				
	2 Wire Unbundled ADSL Loop without manual service inquiry & facility reservaton - Zone 2		2	UAL	UAL2W	11.47	96.15	58.03	50.38	7.93		15.75				
	2 Wire Unbundled ADSL Loop without manual service inquiry & facility reservaton - Zone 3		3	UAL	UAL2W	11.74	96.15	58.03	50.38	7.93		15.75				
	2 Wire Unbundled ADSL Loop without manual service inquiry & facility reservaton - Zone 4		4	UAL	UAL2W	12.69	96.15	58.03	50.38	7.93		15.75				
	Order Coordination for Specified Conversion Time (per LSR)			UAL	OCOSL		18.19									
	CLEC to CLEC Conversion Charge without outside dispatch			UAL	UREWO		86.04	40.33				15.75				
2-WIRE HIGH BIT RATE DIGITAL SUBSCRIBER LINE (HDSL) COMPATIBLE LOOP																
	2 Wire Unbundled HDSL Loop including manual service inquiry & facility reservation - Zone 1		1	UHL	UHL2X	8.75	129.98	79.52	50.38	7.93		15.75				
	2 Wire Unbundled HDSL Loop including manual service inquiry & facility reservation - Zone 2		2	UHL	UHL2X	9.22	129.98	79.52	50.38	7.93		15.75				
	2 Wire Unbundled HDSL Loop including manual service inquiry & facility reservation - Zone 3		3	UHL	UHL2X	9.87	129.98	79.52	50.38	7.93		15.75				
	2 Wire Unbundled HDSL Loop including manual service inquiry & facility reservation - Zone 4		4	UHL	UHL2X	10.46	129.98	79.52	50.38	7.93		15.75				
	Order Coordination for Specified Conversion Time (per LSR)			UHL	OCOSL		18.19									
	2 Wire Unbundled HDSL Loop without manual service inquiry and facility reservation - Zone 1		1	UHL	UHL2W	8.75	104.86	66.74	50.38	7.93		15.75				
	2 Wire Unbundled HDSL Loop without manual service inquiry and facility reservation - Zone 2		2	UHL	UHL2W	9.22	104.86	66.74	50.38	7.93		15.75				
	2 Wire Unbundled HDSL Loop without manual service inquiry and facility reservation - Zone 3		3	UHL	UHL2W	9.87	104.86	66.74	50.38	7.93		15.75				
	2 Wire Unbundled HDSL Loop without manual service inquiry and facility reservation - Zone 4		4	UHL	UHL2W	10.46	104.86	66.74	50.38	7.93		15.75				

CATEGORY	RATE ELEMENTS	Interim	Zone	BCS	USOC	RATES ($)					Svc Order Submitted Elec per LSR	Svc Order Submitted Manually per LSR	Attachment: 2 Incremental Charge - Manual Svc Order vs. Electronic-1st	Attachment: 2 Incremental Charge - Manual Svc Order vs. Electronic-Add'l	Exhibit: B Incremental Charge - Manual Svc Order vs. Electronic-Disc 1st	Exhibit: B Incremental Charge - Manual Svc Order vs. Electronic-Disc Add'l
						Rec	Nonrecurring		Nonrecurring Disconnect		OSS Rates($)					
							First	Add'l	First	Add'l	SOMEC	SOMAN	SOMAN	SOMAN	SOMAN	SOMAN
	Order Coordination for Specified Conversion Time (per LSR)			UHL	OCOSL		18.19									
	CLEC to CLEC Conversion Charge without outside dispatch			UHL	UREWO		85.98	40.33				15.75				
4-WIRE HIGH BIT RATE DIGITAL SUBSCRIBER LINE (HDSL) COMPATIBLE LOOP																
	4 Wire Unbundled HDSL Loop including manual service inquiry and facility reservation - Zone 1		1	UHL	UHL4X	13.78	158.74	108.28	56.72	10.68		15.75				
	4-Wire Unbundled HDSL Loop including manual service inquiry and facility reservation - Zone 2		2	UHL	UHL4X	13.43	158.74	108.28	56.72	10.68		15.75				
	4-Wire Unbundled HDSL Loop including manual service inquiry and facility reservation - Zone 3		3	UHL	UHL4X	15.59	158.74	108.28	56.72	10.68		15.75				
	4-Wire Unbundled HDSL Loop including manual service inquiry and facility reservation - Zone 4		4	UHL	UHL4X	14.46	158.74	108.28	56.72	10.68		15.75				
	Order Coordination for Specified Conversion Time (per LSR)			UHL	OCOSL		18.19									
	4-Wire Unbundled HDSL Loop without manual service inquiry and facility reservation - Zone 1		1	UHL	UHL4W	13.78	133.62	95.50	56.72	10.68		15.75				
	4-Wire Unbundled HDSL Loop without manual service inquiry and facility reservation - Zone 2		2	UHL	UHL4W	13.43	133.62	95.50	56.72	10.68		15.75				
	4-Wire Unbundled HDSL Loop without manual service inquiry and facility reservation - Zone 3		3	UHL	UHL4W	15.59	133.62	95.50	56.72	10.68		15.75				
	4-Wire Unbundled HDSL Loop without manual service inquiry and facility reservation - Zone 4		4	UHL	UHL4W	14.46	133.62	95.50	56.72	10.68		15.75				
	Order Coordination for Specified Conversion Time (per LSR)			UHL	OCOSL		18.19									
	CLEC to CLEC Conversion Charge without outside dispatch			UHL	UREWO		85.98	40.33				15.75				
4-WIRE DS1 DIGITAL LOOP																
	4-Wire DS1 Digital Loop - Zone 1		1	USL	USLXX	79.08	253.93	158.45	46.10	12.07		15.75				
	4-Wire DS1 Digital Loop - Zone 2		2	USL	USLXX	129.38	253.93	158.45	46.10	12.07		15.75				
	4-Wire DS1 Digital Loop - Zone 3		3	USL	USLXX	206.74	253.93	158.45	46.10	12.07		15.75				
	4-Wire DS1 Digital Loop - Zone 4		4	USL	USLXX	458.46	253.93	158.45	46.10	12.07		15.75				
	Order Coordination for Specified Conversion Time (per LSR)			USL	OCOSL		18.19									
	CLEC to CLEC Conversion Charge without outside dispatch			USL	UREWO		100.90	42.96				15.75				
4-WIRE 19.2, 56 OR 64 KBPS DIGITAL GRADE LOOP																
	4 Wire Unbundled Digital 19.2 Kbps		1	UDL	UDL19	27.44	126.53	88.85	60.68	14.64		15.75				
	4 Wire Unbundled Digital 19.2 Kbps		2	UDL	UDL19	34.55	126.53	88.85	60.68	14.64		15.75				
	4 Wire Unbundled Digital 19.2 Kbps		3	UDL	UDL19	40.76	126.53	88.85	60.68	14.64		15.75				
	4 Wire Unbundled Digital 19.2 Kbps		4	UDL	UDL19	32.25	126.53	88.85	60.68	14.64		15.75				
	4 Wire Unbundled Digital Loop 56 Kbps - Zone 1		1	UDL	UDL56	27.44	126.53	88.85	60.68	14.64		15.75				
	4 Wire Unbundled Digital Loop 56 Kbps - Zone 2		2	UDL	UDL56	34.55	126.53	88.85	60.68	14.64		15.75				
	4 Wire Unbundled Digital Loop 56 Kbps - Zone 3		3	UDL	UDL56	40.76	126.53	88.85	60.68	14.64		15.75				
	4 Wire Unbundled Digital Loop 56 Kbps - Zone 4		4	UDL	UDL56	32.25	126.53	88.85	60.68	14.64		15.75				
	Order Coordination for Specified Conversion Time (per LSR)			UDL	OCOSL		18.19									
	4 Wire Unbundled Digital Loop 64 Kbps - Zone 1		1	UDL	UDL64	27.44	126.53	88.85	60.68	14.64		15.75				
	4 Wire Unbundled Digital Loop 64 Kbps - Zone 2		2	UDL	UDL64	34.55	126.53	88.85	60.68	14.64		15.75				
	4 Wire Unbundled Digital Loop 64 Kbps - Zone 3		3	UDL	UDL64	40.76	126.53	88.85	60.68	14.64		15.75				
	4 Wire Unbundled Digital Loop 64 Kbps - Zone 4		4	UDL	UDL64	32.25	126.53	88.85	60.68	14.64		15.75				
	Order Coordination for Specified Conversion Time (per LSR)			UDL	OCOSL		18.19									
	CLEC to CLEC Conversion Charge without outside dispatch			UDL	UREWO		101.94	49.66				15.75				
2-WIRE Unbundled COPPER LOOP																
	2-Wire Unbundled Copper Loop/Short including manual service inquiry & facility reservation - Zone 1		1	UCL	UCLPB	11.11	120.34	69.87	50.38	7.93		15.75				
	2-Wire Unbundled Copper Loop/Short including manual service inquiry & facility reservation - Zone 2		2	UCL	UCLPB	11.47	120.34	69.87	50.38	7.93		15.75				
	2 Wire Unbundled Copper Loop/Short including manual service inquiry & facility reservation - Zone 3		3	UCL	UCLPB	11.74	120.34	69.87	50.38	7.93		15.75				
	2 Wire Unbundled Copper Loop/Short including manual service inquiry & facility reservation - Zone 4		4	UCL	UCLPB	12.69	120.34	69.87	50.38	7.93		15.75				
	Order Coordination for Unbundled Copper Loops (per loop)			UCL	UCLMC		8.20	8.20								
	2-Wire Unbundled Copper Loop/Short without manual service inquiry and facility reservation - Zone 1		1	UCL	UCLPW	11.11	95.21	57.09	50.38	7.93		15.75				
	2-Wire Unbundled Copper Loop/Short without manual service inquiry and facility reservation - Zone 2		2	UCL	UCLPW	11.47	95.21	57.09	50.38	7.93		15.75				

CATEGORY		RATE ELEMENTS	Interim	Zone	BCS	USOC	RATES ($)					Svc Order Submitted Elec per LSR	Svc Order Submitted Manually per LSR	Attachment: 2		Exhibit: B	
														Incremental Charge - Manual Svc Order vs. Electronic-1st	Incremental Charge - Manual Svc Order vs. Electronic-Add'l	Incremental Charge - Manual Svc Order vs. Electronic-Disc 1st	Incremental Charge - Manual Svc Order vs. Electronic-Disc Add'l
							Rec	Nonrecurring		Nonrecurring Disconnect				OSS Rates($)			
								First	Add'l	First	Add'l	SOMEC	SOMAN	SOMAN	SOMAN	SOMAN	SOMAN
		2-Wire Unbundled Copper Loop/Short without manual service inquiry and facility reservation - Zone 3		3	UCL	UCLPW	11.74	95.21	57.09	50.38	7.93		15.75				
		2-Wire Unbundled Copper Loop/Short without manual service inquiry and facility reservation - Zone 4		4	UCL	UCLPW	12.69	95.21	57.09	50.38	7.93		15.75				
		Order Coordination for Unbundled Copper Loops (per loop)			UCL	UCLMC		8.20	8.20								
		2-Wire Unbundled Copper Loop/Long - includes manual srvc. inquiry and facility reservation - Zone 1		1	UCL	UCL2L	29.29	120.34	69.87	50.38	7.93		15.75				
		2-Wire Unbundled Copper Loop/Long - includes manual svc. inquiry and facility reservation - Zone 2		2	UCL	UCL2L	43.46	120.34	69.87	50.38	7.93		15.75				
		2-Wire Unbundled Copper Loop/Long - includes manual svc. inquiry and facility reservation - Zone 3		3	UCL	UCL2L	64.44	120.34	69.87	50.38	7.93		15.75				
		2-Wire Unbundled Copper Loop/Long - includes manual svc. inquiry and facility reservation - Zone 4		4	UCL	UCL2L	87.60	120.34	69.87	50.38	7.93		15.75				
		Order Coordination for Unbundled Copper Loops (per loop)			UCL	UCLMC		8.20	8.20								
		2-Wire Unbundled Copper Loop/Long - without manual service inquiry and facility reservation - Zone 1		1	UCL	UCL2W	29.29	95.21	57.09	50.38	7.93		15.75				
		2-Wire Unbundled Copper Loop/Long - without manual service inquiry and facility reservation - Zone 2		2	UCL	UCL2W	43.46	95.21	57.09	50.38	7.93		15.75				
		2-Wire Unbundled Copper Loop/Long - without manual service inquiry and facility reservation - Zone 3		3	UCL	UCL2W	64.44	95.21	57.09	50.38	7.93		15.75				
		2-Wire Unbundled Copper Loop/Long - without manual service inquiry and facility reservation - Zone 4		4	UCL	UCL2W	87.60	95.21	57.09	50.38	7.93		15.75				
		Order Coordination for Unbundled Copper Loops (per loop)			UCL	UCLMC		8.20	8.20								
		CLEC to CLEC Conversion Charge without outside dispatch (UCL-Des)			UCL	UREWO		95.21	42.40				15.75				
	4-WIRE COPPER LOOP																
		4-Wire Copper Loop/Short - including manual service inquiry and facility reservation - Zone 1		1	UCL	UCL4S	17.30	144.68	94.22	56.72	10.68		15.75				
		4-Wire Copper Loop/Short - including manual service inquiry and facility reservation - Zone 2		2	UCL	UCL4S	18.84	144.68	94.22	56.72	10.68		15.75				
		4-Wire Copper Loop/Short - including manual service inquiry and facility reservation - Zone 3		3	UCL	UCL4S	21.33	144.68	94.22	56.72	10.68		15.75				
		4-Wire Copper Loop/Short - including manual service inquiry and facility reservation - Zone 4		4	UCL	UCL4S	21.33	144.68	94.22	56.72	10.68		15.75				
		Order Coordination for Unbundled Copper Loops (per loop)			UCL	UCLMC		8.20	8.20								
		4-Wire Copper Loop/Short - without manual service inquiry and facility reservation - Zone 1		1	UCL	UCL4W	17.30	119.56	81.44	56.72	10.68		15.75				
		4-Wire Copper Loop/Short - without manual service inquiry and facility reservation - Zone 2		2	UCL	UCL4W	18.84	119.56	81.44	56.72	10.68		15.75				
		4-Wire Copper Loop/Short - without manual service inquiry and facility reservation - Zone 3		3	UCL	UCL4W	21.33	119.56	81.44	56.72	10.68		15.75				
		4-Wire Copper Loop/Short - without manual service inquiry and facility reservation - Zone 4		4	UCL	UCL4W	21.33	119.56	81.44	56.72	10.68		15.75				
		Order Coordination for Unbundled Copper Loops (per loop)			UCL	UCLMC		8.20	8.20								
		4-Wire Unbundled Copper Loop/Long - includes manual svc. inquiry and facility reservation - Zone 1		1	UCL	UCL4L	54.72	144.68	94.22	56.72	10.68		15.75				
		4-Wire Unbundled Copper Loop/Long - includes manual svc. inquiry and facility reservation - Zone 2		2	UCL	UCL4L	97.47	144.68	94.22	56.72	10.68		15.75				
		4-Wire Unbundled Copper Loop/Long - includes manual svc. inquiry and facility reservation - Zone 3		3	UCL	UCL4L	106.06	144.68	94.22	56.72	10.68		15.75				
		4-Wire Unbundled Copper Loop/Long - includes manual svc. inquiry and facility reservation - Zone 4		4	UCL	UCL4L	106.06	144.68	94.22	56.72	10.68		15.75				
		Order Coordination for Unbundled Copper Loops (per loop)			UCL	UCLMC		8.20	8.20								
		4-Wire Unbundled Copper Loop/Long - without manual svc. inquiry and facility reservation - Zone 1		1	UCL	UCL4O	54.72	119.56	81.44	56.72	10.68		15.75				
		4-Wire Unbundled Copper Loop/Long - without manual svc. inquiry and facility reservation - Zone 2		2	UCL	UCL4O	97.47	119.56	81.44	56.72	10.68		15.75				
		4-Wire Unbundled Copper Loop/Long - without manual svc. inquiry and facility reservation - Zone 3		3	UCL	UCL4O	106.06	119.56	81.44	56.72	10.68		15.75				

UNBUNDLED NETWORK ELEMENTS - Mississippi														Attachment: 2		Exhibit: B	
CATEGORY		RATE ELEMENTS	Interim	Zone	BCS	USOC	RATES ($)					Svc Order Submitted Elec per LSR	Svc Order Submitted Manually per LSR	Incremental Charge - Manual Svc Order vs. Electronic-1st	Incremental Charge - Manual Svc Order vs. Electronic-Add'l	Incremental Charge - Manual Svc Order vs. Electronic-Disc 1st	Incremental Charge - Manual Svc Order vs. Electronic-Disc Add'l
							Rec	Nonrecurring		Nonrecurring Disconnect				OSS Rates($)			
								First	Add'l	First	Add'l	SOMEC	SOMAN	SOMAN	SOMAN	SOMAN	SOMAN
		4-Wire Unbundled Copper Loop/Long - without manual service inquiry and facility reservation - Zone 4		4	UCL	UCL4O	106.06	119.56	81.44	56.72	10.68		15.75				
		Order Coordination for Unbundled Copper Loops (per loop)			UCL	UCLMC		8.20	8.20								
		CLEC to CLEC Conversion Charge without outside dispatch (UCL-Des)			UCL	UREWO		95.21	42.40				15.75				
LOOP MODIFICATION																	
		Unbundled Loop Modification, Removal of Load Coils - 2 Wire pair less than or equal to 18k ft			UAL, UHL, UCL, UEQ, ULS, UEA, UEANL, UEPSR, UEPSB	ULM2L		32.57	32.57				15.75				
		Unbundled Loop Modification, Removal of Load Coils - 2 wire greater than 18k ft			UCL, ULS, UEQ	ULM2G		171.49	171.49				15.75				
		Unbundled Loop Modification Removal of Load Coils - 4 Wire less than or equal to 18K ft			UHL, UCL, UEA	ULM4L		32.57	32.57				15.75				
		Unbundled Loop Modification Removal of Load Coils - 4 Wire pair greater than 18k ft			UCL	ULM4G		171.49	171.49				15.75				
		Unbundled Loop Modification Removal of Bridged Tap Removal, per unbundled loop			UAL, UHL, UCL, UEQ, ULS, UEA, UEANL, UEPSR, UEPSB	ULMBT		32.59	32.59				15.75				
SUB-LOOPS																	
	Sub-Loop Distribution																
		Sub-Loop - Per Cross Box Location - CLEC Feeder Facility Set-Up	I		UEANL	USBSA		259.69					15.75				
		Sub-Loop - Per Cross Box Location - Per 25 Pair Panel Set-Up	I		UEANL	USBSB		22.77					15.75				
		Sub-Loop - Per Building Equipment Room - CLEC Feeder Facility Set-Up	I		UEANL	USBSC		178.47					15.75				
		Sub-Loop - Per Building Equipment Room - Per 25 Pair Panel Set-Up	I		UEANL	USBSD		56.39					15.75				
		Sub-Loop Distribution Per 2-Wire Analog Voice Grade Loop - Zone 1	I	1	UEANL	USBN2	7.15	66.18	31.14	45.36	6.71		15.75				
		Sub-Loop Distribution Per 2-Wire Analog Voice Grade Loop - Zone 2	I	2	UEANL	USBN2	9.51	66.18	31.14	45.36	6.71		15.75				
		Sub-Loop Distribution Per 2-Wire Analog Voice Grade Loop - Zone 3	I	3	UEANL	USBN2	12.45	66.18	31.14	45.36	6.71		15.75				
		Sub-Loop Distribution Per 2-Wire Analog Voice Grade Loop - Zone 4		4	UEANL	USBN2	18.26	66.18	31.14	45.36	6.71		15.75				
		Order Coordination for Unbundled Sub-Loops, per sub-loop pair			UEANL	USBMC		8.20	8.20								
		Sub-Loop Distribution Per 4-Wire Analog Voice Grade Loop - Zone 1		1	UEANL	USBN4	7.30	79.49	44.45	51.27	9.35		15.75				
		Sub-Loop Distribution Per 4-Wire Analog Voice Grade Loop - Zone 2		2	UEANL	USBN4	13.92	79.49	44.45	51.27	9.35		15.75				
		Sub-Loop Distribution Per 4-Wire Analog Voice Grade Loop - Zone 3		3	UEANL	USBN4	16.73	79.49	44.45	51.27	9.35		15.75				
		Sub-Loop Distribution Per 4-Wire Analog Voice Grade Loop - Zone 4		4	UEANL	USBN4	16.73	79.49	44.45	51.27	9.35		15.75				
		Order Coordination for Unbundled Sub-Loops, per sub-loop pair			UEANL	USBMC		8.20	8.20				15.75				
		Sub-Loop 2-Wire Intrabuilding Network Cable (INC)	I		UEANL	USBR2	2.29	53.32	18.28	45.36	6.71		15.75				
		Order Coordination for Unbundled Sub-Loops, per sub-loop pair			UEANL	USBMC		8.20	8.20								
		Sub-Loop 4-Wire Intrabuilding Network Cable (INC)	I		UEANL	USBR4	4.40	59.60	24.55	51.27	9.35		15.75				
		Order Coordination for Unbundled Sub-Loops, per sub-loop pair			UEANL	USBMC		8.20	8.20								
		2 Wire Copper Unbundled Sub-Loop Distribution - Zone 1	I	1	UEF	UCS2X	6.06	66.18	31.14	45.36	6.71		15.75				
		2 Wire Copper Unbundled Sub-Loop Distribution - Zone 2	I	2	UEF	UCS2X	7.09	66.18	31.14	45.36	6.71		15.75				
		2 Wire Copper Unbundled Sub-Loop Distribution - Zone 3	I	3	UEF	UCS2X	8.16	66.18	31.14	45.36	6.71		15.75				

CATEGORY	RATE ELEMENTS	Interim	Zone	BCS	USOC	RATES ($)					Svc Order Submitted Elec per LSR	Svc Order Submitted Manually per LSR	Attachment: 2 Incremental Charge - Manual Svc Order vs. Electronic-1st	Attachment: 2 Incremental Charge - Manual Svc Order vs. Electronic-Add'l	Exhibit: B Incremental Charge - Manual Svc Order vs. Electronic-Disc 1st	Exhibit: B Incremental Charge - Manual Svc Order vs. Electronic-Disc Add'l
						Rec	Nonrecurring		Nonrecurring Disconnect				OSS Rates($)			
							First	Add'l	First	Add'l	SOMEC	SOMAN	SOMAN	SOMAN	SOMAN	SOMAN
	2 Wire Copper Unbundled Sub-Loop Distribution - Zone 4		4	UEF	UCS2X	9.90	66.18	31.14	45.36	6.71		15.75				
	Order Coordination for Unbundled Sub-Loops, per sub-loop pair			UEF	USBMC		8.20	8.20								
	4 Wire Copper Unbundled Sub-Loop Distribution - Zone 1	I	1	UEF	UCS4X	5.10	79.49	44.45	51.27	9.35		15.75				
	4 Wire Copper Unbundled Sub-Loop Distribution - Zone 2	I	2	UEF	UCS4X	9.11	79.49	44.45	51.27	9.35		15.75				
	4 Wire Copper Unbundled Sub-Loop Distribution - Zone 3	I	3	UEF	UCS4X	14.00	79.49	44.45	51.27	9.35		15.75				
	4 Wire Copper Unbundled Sub-Loop Distribution - Zone 4		4	UEF	UCS4X	14.00	79.49	44.45	51.27	9.35		15.75				
	Order Coordination for Unbundled Sub-Loops, per sub-loop pair			UEF	USBMC		8.20	8.20								
Unbundled Network Terminating Wire (UNTW)																
	Unbundled Network Terminating Wire (UNTW) per Pair			UENTW	UENPP	0.3366	30.55					15.75				
Network Interface Device (NID)																
	Network Interface Device (NID) - 1-2 lines			UENTW	UND12		43.84	28.90				15.75				
	Network Interface Device (NID) - 1-6 lines			UENTW	UND16		65.30	50.36				15.75				
	Network Interface Device Cross Connect - 2 W			UENTW	UNDC2		5.94	5.94				15.75				
	Network Interface Device Cross Connect - 4W			UENTW	UNDC4		5.94	5.94				15.75				
SUB-LOOPS																
Sub-Loop Feeder																
	USL-Feeder, DS0 Set-up per Cross Box location - CLEC Distribution Facility set-up			UEA, UDN,UCL,UDL,UDC	USBFW		259.69					15.75				
	USL Feeder - DS0 Set-up per Cross Box location - per 25 pair set-up			UEA, UDN,UCL,UDL,UDC	USBFX		22.77	22.77				15.75				
	USL Feeder DS1 Set-up at DSX location, per DS1 termination			USL	USBFZ		534.46	11.30				15.75				
	Unbundled Sub-Loop Feeder Loop, 2 Wire Ground Start, Voice Grade - Zone 1		1	UEA	USBFA	7.98	93.23	56.50	54.45	13.51		15.75				
	Unbundled Sub-Loop Feeder Loop, 2 Wire Ground-Start, Voice Grade - Zone 2		2	UEA	USBFA	10.39	93.23	56.50	54.45	13.51		15.75				
	Unbundled Sub-Loop Feeder Loop, Per 2 Wire Ground-Start, Voice Grade - Zone 3		3	UEA	USBFA	16.11	93.23	56.50	54.45	13.51		15.75				
	Unbundled Sub-Loop Feeder Loop, 2 Wire Ground-Start Loop, Voice Grade - Zone 4		4	UEA	USBFA	28.37	93.23	56.50	54.45	13.51		15.75				
	Order Coordination for Specified Conversion Time, per LSR			UEA	OCOSL		18.19									
	Unbundlde Sub-Loop Feeder Loop, 2 Wire Loop-Start, Voice Grade - Zone 1		1	UEA	USBFB	7.98	93.23	56.50	54.45	13.51		15.75				
	Unbundled Sub-Loop Feeder Loop, 2 Wire Loop-Start, Voice Grade - Zone 2		2	UEA	USBFB	10.39	93.23	56.50	54.45	13.51		15.75				
	Unbundled Sub-Loop Feeder Loop, 2 Wire Start Loop, Voice Grade - Zone 3		3	UEA	USBFB	16.11	93.23	56.50	54.45	13.51		15.75				
	Unbundled Sub-Loop Feeder Loop, 2 Wire Loop-Start, Voice Grade - Zone 4		4	UEA	USBFB	28.37	93.23	56.50	54.45	13.51		15.75				
	Order Coordination for Specified Time Conversion, per LSR			UEA	OCOSL		18.19									
	Unbundled Sub-Loop Feeder Loop, 2 Wire Reverse Battery, Voice Grade - Zone 1		1	UEA	USBFC	7.98	93.23	56.50	54.45	13.51		15.75				
	Unbundled Sub-Loop Feeder Loop, 2 Wire Reverse Battery, Voice Grade - Zone 2		2	UEA	USBFC	10.39	93.23	56.50	54.45	13.51		15.75				
	Unbundled Sub-Loop Feeder Loop, 2 Wire Reverse Battery, Voice Grade - Zone 3		3	UEA	USBFC	16.11	93.23	56.50	54.45	13.51		15.75				
	Unbundled Sub-Loop Feeder Loop, 2 Wire Reverse Battery, Voice Grade - Zone 4		4	UEA	USBFC	28.37	93.23	56.50	54.45	13.51		15.75				
	Order Coordination For Specified Conversion Time, per LSR			UEA	OCOSL		18.19									
	Unbundled Sub-Loop Feeder Loop, 4 Wire Ground-Start, Voice Grade - Zone 1		1	UEA	USBFD	21.69	107.71	70.03	63.68	17.64		15.75				
	Unbundled Sub-Loop Feeder Loop, 4 Wire Ground-Start, Voice Grade - Zone 2		2	UEA	USBFD	26.06	107.71	70.03	63.68	17.64		15.75				
	Unbundled Sub-Loop Feeder Loop, 4 Wire Ground Start, Voice Grade - Zone 3		3	UEA	USBFD	34.77	107.71	70.03	63.68	17.64		15.75				
	Unbundled Sub-Loop Feeder Loop, 4 Wire Ground-Start, Voice Grade - Zone 4		4	UEA	USBFD	34.77	107.71	70.03	63.68	17.64		15.75				
	Order Coordination For Specified Conversion Time, Per LSR			UEA	OCOSL		18.19									

CATEGORY		RATE ELEMENTS	Interim	Zone	BCS	USOC	RATES ($)					Svc Order Submitted Elec per LSR	Svc Order Submitted Manually per LSR	Attachment: 2 Incremental Charge - Manual Svc Order vs. Electronic-1st	Attachment: 2 Incremental Charge - Manual Svc Order vs. Electronic-Add'l	Exhibit: B Incremental Charge - Manual Svc Order vs. Electronic-Disc 1st	Exhibit: B Incremental Charge - Manual Svc Order vs. Electronic-Disc Add'l
							Rec	Nonrecurring		Nonrecurring Disconnect		OSS Rates($)					
								First	Add'l	First	Add'l	SOMEC	SOMAN	SOMAN	SOMAN	SOMAN	SOMAN
		Unbundled Sub-Loop Feeder Loop, 4 Wire Loop-Start, Voice Grade - Zone 1		1	UEA	USBFE	21.69	107.71	70.03	63.68	17.64		15.75				
		Unbundled Sub-Loop Feeder Loop, 4 Wire Loop-Start, Voice Grade - Zone 2		2	UEA	USBFE	26.06	107.71	70.03	63.68	17.64		15.75				
		Unbundled Sub-Loop Feeder Loop, 4 Wire Loop-Start, Voice Grade - Zone 3		3	UEA	USBFE	34.77	107.71	70.03	63.68	17.64		15.75				
		Sub-Loop Feeder - Per 4-Wire Analog Voice Grade Loop-Start Loop - Zone 4		4	UEA	USBFE	34.77	107.71	70.03	63.68	17.64		15.75				
		Order Coordination For Specified Conversion Time, Per LSR			UEA	OCOSL		18.19									
		Unbundled Sub-Loop Feeder Loop, 2 Wire ISDN BRI - Zone 1		1	UDN	USBFF	14.60	106.46	68.78	55.58	13.13		15.75				
		Unbundled Sub-Loop Feeder Loop, 2-Wire ISDN BRI - Zone 2		2	UDN	USBFF	18.78	106.46	68.78	55.58	13.13		15.75				
		Unbundled Sub-Loop Feeder Loop, 2-Wire ISDN BRI - Zone 3		3	UDN	USBFF	25.47	106.46	68.78	55.58	13.13		15.75				
		Unbundled Sub-Loop Feeder Loop, 2-Wire ISDN BRI - Zone 4		4	UDN	USBFF	41.41	106.46	68.78	55.58	13.13		15.75				
		Order Coordination For Specified Conversion Time, Per LSR			UDN	OCOSL		18.19									
		Unbundled Sub-Loop Feeder, 2 Wire UDC (IDSL compatible)		1	UDC	USBFS	14.60	106.46	68.78	55.58	13.13		15.75				
		Unbundled Sub-Loop Feeder, 2 Wire UDC (IDSL compatible)		2	UDC	USBFS	18.78	106.46	68.78	55.58	13.13		15.75				
		Unbundled Sub-Loop Feeder, 2 Wire UDC (IDSL compatible)		3	UDC	USBFS	25.47	106.46	68.78	55.58	13.13		15.75				
		Unbundled Sub-Loop Feeder, 2 Wire UDC (IDSL compatible)		4	UDC	USBFS	41.41	106.46	68.78	55.58	13.13		15.75				
		Unbundled Sub-Loop Feeder Loop, 4-Wire DS1 - Zone 1		1	USL	USBFG	55.19	101.97	64.29	63.68	17.64		15.75				
		Unbundled Sub-Loop Feeder Loop, 4-Wire DS1 - Zone 2		2	USL	USBFG	100.03	101.97	64.29	63.68	17.64		15.75				
		Unbundled Sub-Loop Feeder Loop, 4-Wire DS1 - Zone 3		3	USL	USBFG	183.66	101.97	64.29	63.68	17.64		15.75				
		Unbundled Sub-Loop Feeder Loop, 4-Wire DS1 - Zone 4		4	USL	USBFG	430.04	101.97	64.29	63.68	17.64		15.75				
		Order Coordination For Specified Conversion Time, Per LSR			USL	OCOSL		18.19									
		Unbundled Sub-Loop Feeder Loop, 2-Wire Copper Loop - Zone 1		1	UCL	USBFH	5.88	84.27	46.59	53.14	10.70		15.75				
		Unbundled Sub-Loop Feeder Loop, 2-Wire Copper Loop - Zone 2		2	UCL	USBFH	5.21	84.27	46.59	53.14	10.70		15.75				
		Unbundled Sub-Loop Feeder Loop, 2-Wire Copper Loop - Zone 3		3	UCL	USBFH	4.40	84.27	46.59	53.14	10.70		15.75				
		Unbundled Sub-Loop Feeder, 2-Wire Copper Loop - Zone 4		4	UCL	USBFH	3.63	84.27	46.59	53.14	10.70		15.75				
		Order Coordination For Specified Conversion Time, per LSR			UCL	OCOSL		18.19									
		Sub-Loop Feeder - Per 4-Wire Copper Loop - Zone 1		1	UCL	USBFJ	13.49	101.58	63.90	59.71	13.67		15.75				
		Sub-Loop Feeder - Per 4-Wire Copper Loop - Zone 2		2	UCL	USBFJ	10.96	101.58	63.90	59.71	13.67		15.75				
		Sub-Loop Feeder - Per 4-Wire Copper Loop - Zone 3		3	UCL	USBFJ	8.59	101.58	63.90	59.71	13.67		15.75				
		Sub-Loop Feeder - Per 4-Wire Copper Loop - Zone 4		4	UCL	USBFJ	8.59	101.58	63.90	59.71	13.67		15.75				
		Order Coordination For Specified Conversion Time, per LSR			UCL	OCOSL		18.19									
		Sub-Loop Feeder - Per 4-Wire 19.2 Kbps Digital Grade Loop		1	UDL	USBFN	22.89	101.97	64.29	63.68	17.64		15.75				
		Sub-Loop Feeder - Per 4-Wire 19.2 Kbps Digital Grade Loop		2	UDL	USBFN	25.11	101.97	64.29	63.68	17.64		15.75				
		Sub-Loop Feeder - Per 4-Wire 19.2 Kbps Digital Grade Loop		3	UDL	USBFN	30.84	101.97	64.29	63.68	17.64		15.75				
		Sub-Loop Feeder - Per 4-Wire 19.2 Kbps Digital Grade Loop		4	UDL	USBFN	41.05	101.97	64.29	63.68	17.64		15.75				
		Sub-Loop Feeder - Per 4-Wire 56 Kbps Digital Grade Loop - Zone 1		1	UDL	USBFO	22.89	101.97	64.29	63.68	17.64		15.75				
		Sub-Loop Feeder - Per 4-Wire 56 Kbps Digital Grade Loop - Zone 2		2	UDL	USBFO	25.11	101.97	64.29	63.68	17.64		15.75				
		Sub-Loop Feeder - Per 4-Wire 56 Kbps Digital Grade Loop - Zone 3		3	UDL	USBFO	30.84	101.97	64.29	63.68	17.64		15.75				
		Sub-Loop Feeder - Per 4-Wire 56 Kbps Digital Grade Loop - Zone 4		4	UDL	USBFO	41.05	101.97	64.29	63.68	17.64		15.75				
		Order Coordination For Specified Time Conversion, per LSR			UDL	OCOSL		18.19									
		Sub-Loop Feeder - Per 4-Wire 64 Kbps Digital Grade Loop - Zone 1		1	UDL	USBFP	22.89	101.97	64.29	63.68	17.64		15.75				
		Sub-Loop Feeder - Per 4-Wire 64 Kbps Digital Grade Loop - Zone 2		2	UDL	USBFP	25.11	101.97	64.29	63.68	17.64		15.75				
		Sub-Loop Feeder - Per 4-Wire 64 Kbps Digital Grade Loop - Zone 3		3	UDL	USBFP	30.84	101.97	64.29	63.68	17.64		15.75				
		Sub-Loop Feeder - Per 4-Wire 64 Kbps Digital Grade Loop - Zone 4		4	UDL	USBFP	41.05	101.97	64.29	63.68	17.64		15.75				
		Order Coordination For Specified Conversion Time, per LSR			UDL	OCOSL		18.19									
SUB-LOOPS																	

UNBUNDLED NETWORK ELEMENTS - Mississippi														Attachment: 2		Exhibit: B	
CATEGORY		RATE ELEMENTS	Interim	Zone	BCS	USOC	RATES ($)					Svc Order Submitted Elec per LSR	Svc Order Submitted Manually per LSR	Incremental Charge - Manual Svc Order vs. Electronic-1st	Incremental Charge - Manual Svc Order vs. Electronic-Add'l	Incremental Charge - Manual Svc Order vs. Electronic-Disc 1st	Incremental Charge - Manual Svc Order vs. Electronic-Disc Add'l
							Rec	Nonrecurring		Nonrecurring Disconnect		OSS Rates($)					
								First	Add'l	First	Add'l	SOMEC	SOMAN	SOMAN	SOMAN	SOMAN	SOMAN
	Sub-Loop Feeder																
		Sub Loop Feeder - DS3 - Per Mile Per Month	I		UE3	1L5SL	18.88										
		Sub Loop Feeder - DS3 - Facility Termination Per Month	I		UE3	USBF1	349.41	3,396.56	406.45	157.96	89.54		15.75				
		Sub Loop Feeder – STS-1 – Per Mile Per Month	I		UDLSX	1L5SL	18.88										
		Sub Loop Feeder - STS-1 - Facility Termination Per Month	I		UDLSX	USBF7	376.07	3,396.56	406.45	157.96	89.54		15.75				
UNBUNDLED LOOP CONCENTRATION																	
		Unbundled Loop Concentration - System A (TR008)			ULC	UCT8A	363..67	327.30	327.30				15.75				
		Unbundled Loop Concentration - System B (TR008)			ULC	UCT8B	47.56	136.37	136.37				15.75				
		Unbundled Loop Concentration - System A (TR303)			ULC	UCT3A	397.35	327.30	327.30				15.75				
		Unbundled Loop Concentration - System B (TR303)			ULC	UCT3B	80.15	136.37	136.37				15.75				
		Unbundled Loop Concentration - DS1 Loop Interface Card			ULC	UCTCO	4.52	63.65	46.34	17.31	4.85		15.75				
		Unbundled Loop Concentration - ISDN Loop Interface (Brite Card)			UDN	ULCC1	7.17	10.60	10.54	5.56	5.53		15.75				
		Unbundled Loop Concentration - UDC Loop Interface (Brite Card)			UDC	ULCCU	7.17	10.60	10.54	5.56	5.53		15.75				
		Unbundled Loop Concentration - -2 Wire Voice-Loop Start or Ground Start Loop Interface (POTS Card)			UEA	ULCC2	1.80	10.60	10.54	5.56	5.53		15.75				
		Unbundled Loop Concentration - 2 Wire Voice - Reverse Battery Loop Interface (SPOTS Card)			UEA	ULCCR	10.66	10.60	10.54	5.56	5.53		15.75				
		Unbundled Loop Concentration - 4 Wire Voice Loop Interface (Specials Card)			UEA	ULCC4	6.36	10.60	10.54	5.56	5.53		15.75				
		Unbundled Loop Concentration - TEST CIRCUIT Card			ULC	UCTTC	31.07	10.60	10.54	5.56	5.53		15.75				
		Unbundled Loop Concentration - Digital 19.2 Kbps Data Loop Interface			UDL	ULCC7	9.42	10.60	10.54	5.56	5.53		15.75				
		Unbundled Loop Concentration - Digital 56 Kbps Data Loop Interface			UDL	ULCC5	9.42	10.60	10.54	5.56	5.53		15.75				
		Unbundled Loop Concentration - Digital 64 Kbps Data Loop Interface			UDL	ULCC6	9.42	10.60	10.54	5.56	5.53		15.75				
UNE OTHER, PROVISIONING ONLY - NO RATE																	
		NID - Dispatch and Service Order for NID installation			UENTW	UNDBX	0.00	0.00									
		UNTW Circuit Id Establishment, Provisioning Only - No Rate			UENTW	UENCE	0.00	0.00									
		Unbundled Contract Name, Provisioning Only - No Rate			UEANL,UEF,UEQ,UENTW	UNECN	0.00	0.00									
UNE OTHER, PROVISIONING ONLY - NO RATE																	
		Unbundled Contact Name, Provisioning Only - no rate			UAL,UCL,UDC,UDL,UDN,UEA,UHL,ULC	UNECN	0.00	0.00									
		Unbundled Sub-Loop Feeder-2 Wire Cross Box Jumper - no rate			UEA,UDN,UCL,UDC	USBFQ	0.00	0.00									
		Unbundled Sub-Loop Feeder-4 Wire Cross Box Jumper - no rate			UEA,USL,UCL,UDL	USBFR	0.00	0.00									
		Unbundled DS1 Loop - Superframe Format Option - no rate			USL	CCOSF	0.00	0.00									
		Unbundled DS1 Loop - Expanded Superframe Format option - no rate			USL	CCOEF	0.00	0.00									
HIGH CAPACITY UNBUNDLED LOCAL LOOP																	
	NOTE: minimum billing period of three months for DS3/STS-1 Local Loop																
		High Capacity Unbundled Local Loop - DS3 - Per Mile per month			UE3	1L5ND	11.20										
		High Capacity Unbundled Local Loop - DS3 - Facility Termination per month			UE3	UE3PX	326.15	454.13	265.47	123.23	86.19		15.75				
		High Capacity Unbundled Local Loop - STS-1 - Per Mile per month			UDLSX	1L5ND	11.20										
		High Capacity Unbundled Local Loop - STS-1 - Facility Termination per month			UDLSX	UDLS1	338.55	454.13	265.47	123.23	86.19		15.75				
LOOP MAKE-UP																	
		Loop Makeup - Preordering Without Reservation, per working or spare facility queried (Manual).			UMK	UMKLW		24.12	24.12								
		Loop Makeup - Preordering With Reservation, per spare facility queried (Manual).			UMK	UMKLP		25.58	25.58								

UNBUNDLED NETWORK ELEMENTS - Mississippi														Attachment: 2		Exhibit: B	
CATEGORY		RATE ELEMENTS	Interim	Zone	BCS	USOC	RATES ($)					Svc Order Submitted Elec per LSR	Svc Order Submitted Manually per LSR	Incremental Charge - Manual Svc Order vs. Electronic-1st	Incremental Charge - Manual Svc Order vs. Electronic-Add'l	Incremental Charge - Manual Svc Order vs. Electronic-Disc 1st	Incremental Charge - Manual Svc Order vs. Electronic-Disc Add'l
							Rec	Nonrecurring		Nonrecurring Disconnect		OSS Rates($)					
								First	Add'l	First	Add'l	SOMEC	SOMAN	SOMAN	SOMAN	SOMAN	SOMAN
HIGH FREQUENCY SPECTRUM																	
	LINE SHARING																
	SPLITTERS-CENTRAL OFFICE BASED																
		Line Sharing Splitter, per System 96 Line Capacity			ULS	ULSDA	186.67	189.89	0.00	178.41	0.00		15.75				
		Line Sharing Splitter, per System 24 Line Capacity			ULS	ULSDB	46.67	189.89	0.00	178.41	0.00		15.75				
		Line Sharing Splitter, Per System, 8 Line Capacity	I		ULS	ULSD8	15.55	189.89	0.00	178.41	0.00		15.75				
		Line Sharing-DLEC Owned Splitter in CO-CFA activaton-deactivation (per LSOD)			ULS	ULSDG		86.98	0.00	49.96	0.00		15.75				
	END USER ORDERING-CENTRAL OFFICE BASED-HIGH FREQUENCY SPECTRUM AKA LINE SHARING																
		Line Sharing - per Line Activation (BST Owned Splitter)			ULS	ULSDC	0.61	18.62	10.66	10.04	4.93		15.75				
		Line Sharing - per Subsequent Activity per Line Rearrangement(BST Owned Splitter)			ULS	ULSDS		16.48	8.24				15.75				
		Line Sharing - per Subsequent Activity per Line Rearrangement(DLEC Owned Splitter)			ULS	ULSCS		16.48	8.24				15.75				
		Line Sharing - per Line Activation (DLEC owned Splitter)	I		ULS	ULSCC	0.61	47.44	19.31	20.67	12.74		15.75				
	LINE SPLITTING																
	END USER ORDERING-CENTRAL OFFICE BASED																
		Line Splitting - per line activation DLEC owned splitter	R		UEPSR UEPSB	UREOS	0.61										
		Line Splitting - per line activation BST owned - physical	R		UEPSR UEPSB	UREBP	0.61	18.62	10.66	10.04	4.93		15.75				
		Line Splitting - per line activation BST owned - virtual	R		UEPSR UEPSB	UREBV	0.61	18.62	10.66	10.04	4.93		15.75				
	REMOTE SITE HIGH FREQUENCY SPECTRUM																
	SPLITTERS-REMOTE SITE																
		Remote Site Line Share BellSouth Owned Splitter, 24 Port	I		ULS	ULSRB	42.59	114.62	0.00	84.87	0.00		15.75				
		Remote Site Line Share Cable Pair Activation CLEC Owned at RS and Deactivation	I		ULS	ULSTG		95.48	0.00	68.12	0.00		15.75				
	END USER ORDERING-REMOTE SITE HIGH FREQUENCY SPECTRUM AKA REMOTE SITE LINE SHARING																
		Remote Site Line Share Line Activationfor End User Served at RS, BST Splitter	I		ULS	ULSRC	0.61	36.96	21.17	19.93	9.78		15.75				
		RS Line Share Line Activation for End User served at RS, CLEC Splitter	I		ULS	ULSTC	0.61	36.96	21.17	19.93	9.78		15.75				
		Remote Site Line Share Subsequent Activity-RS BST Owned Splitter	I		ULS	ULSRS		49.07	17.80				15.75				
		Remote Site Line Share Subsequent Activity-RS CLEC Owned Splitter	I		ULS	ULSTS		49.07	17.80				15.75				
UNBUNDLED DEDICATED TRANSPORT																	
	NOTE: INTEROFFICE CHANNEL DEDICATED TRANSPORT - minimum billing period - below DS3=one month, DS3/STS-1=four months																
	INTEROFFICE CHANNEL - DEDICATED TRANSPORT																
		Interoffice Channel - Dedicated Transport - 2-Wire Voice Grade - Per Mile per month			U1TVX	1L5XX	0.0098										
		Interoffice Channel - Dedicated Transport- 2- Wire Voice Grade - Facility Termination			U1TVX	U1TV2	22.52	40.77	27.57	17.26	7.11		15.75				
		Interoffice Channel - Dedicated Transpor t- 2-Wire Voice Grade Rev Bat. - Per Mile per month			U1TVX	1L5XX	0.0098										
		Interoffice Channel - Dedicated Transport- 2- Wire VG Rev Bat. - Facility Termination			U1TVX	U1TR2	22.52	40.77	27.57	17.26	7.11		15.75				
		Interoffice Channel - Dedicated Transport - 4-Wire Voice Grade - Per Mile per month			U1TVX	1L5XX	0.0098										
		Interoffice Channel - Dedicated Transport - 4- Wire Voice Grade - Facility Termination			U1TVX	U1TV4	19.79	40.77	27.57	17.26	7.11		15.75				
		Interoffice Channel - Dedicated Transport - 56 kbps - per mile per month			U1TDX	1L5XX	0.0098										
		Interoffice Channel - Dedicated Transport - 56 kbps - Facility Termination			U1TDX	U1TD5	15.68	40.78	27.57	17.26	7.11		15.75				
		Interoffice Channel - Dedicated Transport - 64 kbps - per mile per month			U1TDX	1L5XX	0.0098										
		Interoffice Channel - Dedicated Transport - 64 kbps - Facility Termination			U1TDX	U1TD6	15.68	40.78	27.57	17.26	7.11		15.75				
		Interoffice Channel - Dedicated Channel - DS1 - Per Mile per month			U1TD1	1L5XX	0.201										

CATEGORY	RATE ELEMENTS	Interim	Zone	BCS	USOC	RATES ($)					Svc Order Submitted Elec per LSR	Svc Order Submitted Manually per LSR	Attachment: 2		Exhibit: B	
													Incremental Charge - Manual Svc Order vs. Electronic-1st	Incremental Charge - Manual Svc Order vs. Electronic-Add'l	Incremental Charge - Manual Svc Order vs. Electronic-Disc 1st	Incremental Charge - Manual Svc Order vs. Electronic-Disc Add'l
						Rec	Nonrecurring		Nonrecurring Disconnect		OSS Rates($)					
							First	Add'l	First	Add'l	SOMEC	SOMAN	SOMAN	SOMAN	SOMAN	SOMAN
	Interoffice Channel - Dedicated Tranport - DS1 - Facility Termination			U1TD1	U1TF1	57.33	89.79	82.28	16.86	14.90		15.75				
	Interoffice Channel - Dedicated Transport - DS3 - Per Mile per month			U1TD3	1L5XX	4.76										
	Interoffice Channel - Dedicated Transport - DS3 - Facility Termination per month			U1TD3	U1TF3	641.90	280.37	163.70	62.08	60.29		15.75				
	Interoffice Channel - Dedicated Transport - STS-1 - Per Mile per month			U1TS1	1L5XX	4.76										
	Interoffice Channel - Dedicated Transport - STS-1 - Facility Termination			U1TS1	U1TFS	644.21	280.37	163.70	62.08	60.29		15.75				
	LOCAL CHANNEL - DEDICATED TRANSPORT															
	NOTE: LOCAL CHANNEL DEDICATED TRANSPORT - minimum billing period = below DS3=one month, DS3/STS-1=four months															
	Local Channel - Dedicated - 2-Wire Voice Grade			ULDVX	ULDV2	14.91	194.22	33.36	37.79	3.30		15.75				
	Local Channel - Dedicated - 2-Wire Voice Grade Rev Bat			ULDVX	ULDR2	14.91	194.22	33.36	37.79	3.30		15.75				
	Local Channel - Dedicated - 4-Wire Voice Grade			ULDVX	ULDV4	15.99	194.66	33.80	38.27	3.78		15.75				
	Local Channel - Dedicated - DS1 - Zone 1		1	ULDD1	ULDF1	36.83	178.50	154.61	22.89	15.74		15.75				
	Local Channel - Dedicated - DS1 - Zone 2		2	ULDD1	ULDF1	35.99	178.50	154.61	22.89	15.74		15.75				
	Local Channel - Dedicated - DS1 - Zone 3		3	ULDD1	ULDF1	221.63	178.50	154.61	22.89	15.74		15.75				
	Local Channel - Dedicated - DS1 - Zone 4		4	ULDD1	ULDF1	221.63	178.50	154.61	22.89	15.74						
	Local Channel - Dedicated - DS3 - Per Mile per month			ULDD3	1L5NC	9.66										
	Local Channel - Dedicated - DS3 - Facility Termination			ULDD3	ULDF3	413.87	454.13	265.47	123.23	86.19		15.75				
	Local Channel - Dedicated - STS-1- Per Mile per month			ULDS1	1L5NC	9.66										
	Local Channel - Dedicated - STS-1 - Facility Termination			ULDS1	ULDFS	408.02	454.13	265.47	123.23	86.19		15.75				
DARK FIBER																
	Dark Fiber, Four Fiber Strands, Per Route Mile or Fraction Thereof per month - Local Channel			UDF	1L5DC	59.95										
	NRC Dark Fiber - Local Channel			UDF	UDFC4		642.79	138.67	326.97	203.85		15.75				
	Dark Fiber, Four Fiber Strands, Per Route Mile or Fraction Thereof per month - Interoffice Channel			UDF	1L5DF	28.27										
	NRC Dark Fiber - Interoffice Channel			UDF	UDF14		642.79	138.67	326.97	203.85		15.75				
	Dark Fiber, Four Fiber Strands, Per Route Mile or Fraction Thereof per month - Local Loop			UDF	1L5DL	59.95										
	NRC Dark Fiber - Local Loop			UDF	UDFL4		642.79	138.67	326.97	203.85		15.75				
8XX ACCESS TEN DIGIT SCREENING																
	8XX Access Ten Digit Screening, Per Call			OHD		0.0006216										
	8XX Access Ten Digit Screening, Reservation Charge Per 8XX Number Reserved			OHD	N8R1X		2.60	0.44				15.75				
	8XX Access Ten Digit Screening, Per 8XX No. Established W/O POTS Translations			OHD			5.97	0.81	4.60	0.54		15.75				
	8XX Access Ten Digit Screening, Per 8XX No. Established With POTS Translations			OHD	N8FTX		5.97	0.81	4.60	0.54		15.75				
	8XX Access Ten Digit Screening, Customized Area of Service Per 8XX Number			OHD	N8FCX		2.60	1.30				15.75				
	8XX Access Ten Digit Screening, Multiple InterLATA CXR Routing Per CXR Requested Per 8XX No.			OHD	N8FMX		3.04	1.74				15.75				
	8XX Access Ten Digit Screening, Change Charge Per Request			OHD	N8FAX		3.04	0.44				15.75				
	8XX Access Ten Digit Screening, Call Handling and Destination Features			OHD	N8FDX		2.60					15.75				
	8XX Access Ten Digit Screening, w/ 8FL No. Delivery, per query			OHD		0.0006216										
	8XX Access Ten Digit Screening, w/ POTS No. Delivery, per query			OHD		0.0006216										
LINE INFORMATION DATA BASE ACCESS (LIDB)																
	LIDB Common Transport Per Query			OQT		0.0000197										
	LIDB Validation Per Query			OQU		0.0137053										
	LIDB Originating Point Code Establishment or Change			OQT, OQU	NRPBX		34.52	34.52	42.33	42.33		15.75				
SIGNALING (CCS7)																
	CCS7 Signaling Termination, Per STP Port			UDB	PT8SX	132.21										
	CCS7 Signaling Usage, Per TCAP Message			UDB		0.0000597										

UNBUNDLED NETWORK ELEMENTS - Mississippi														Attachment: 2		Exhibit: B	
CATEGORY		RATE ELEMENTS	Interim	Zone	BCS	USOC	RATES ($)					Svc Order Submitted Elec per LSR	Svc Order Submitted Manually per LSR	Incremental Charge - Manual Svc Order vs. Electronic-1st	Incremental Charge - Manual Svc Order vs. Electronic-Add'l	Incremental Charge - Manual Svc Order vs. Electronic-Disc 1st	Incremental Charge - Manual Svc Order vs. Electronic-Disc Add'l
							Rec	Nonrecurring		Nonrecurring Disconnect				OSS Rates($)			
								First	Add'l	First	Add'l	SOMEC	SOMAN	SOMAN	SOMAN	SOMAN	SOMAN
		CCS7 Signaling Connection, Per link (A link)			UDB	TPP++	16.55	35.74	35.74	16.53	16.53		15.75				
		CCS7 Signaling Connection, Per link (B link) (also known as D link)			UDB	TPP++	16.55	35.74	35.74	16.53	16.53		15.75				
		CCS7 Signaling Usage, Per ISUP Message			UDB		0.0000149										
		CCS7 Signaling Usage Surrogate, per link per LATA			UDB	STU56	683.55										
		CCS7 Signaling Point Code, per Originating Point Code Establishment or Change, per STP affected			UDB	CCAPO		29.18	29.18	35.78	35.78		15.75				
E911 SERVICE																	
		Local Channel - Dedicated - 2-wr Voice Grade					14.91	194.22	33.36	37.79	3.30		15.75				
		Interoffice Transport - Dedicated - 2-wr Voice Grade Per Mile					0.0098										
		Interoffice Transport - Dedicated - 2-wr Voice Grade Per Facility Termination					22.52	40.77	27.57	17.26	7.11		15.75				
		Local Channel - Dedicated - DS1 - Zone 1					36.83	178.50	154.61	22.89	15.74		15.75				
		Local Channel - Dedicated - DS1 - Zone 2					35.99	178.50	154.61	22.89	15.74		15.75				
		Local Channel - Dedicated - DS1 - Zone 3					221.63	178.50	154.61	22.89	15.74		15.75				
		Local Channel - Dedicated - DS1 - Zone 4					221.63	178.50	154.61	22.89	15.74		15.75				
		Interoffice Transport - Dedicated - DS1 Per Mile					0.2010										
		Interoffice Transport - Dedicated - DS1 Per Facility Termination					57.33	89.79	82.28	16.86	14.90		15.75				
													15.75				
CALLING NAME (CNAM) SERVICE																	
		CNAM For DB Owners - Service Establishment			OQV			23.09	23.09	21.23	21.23		15.75				
		CNAM For Non DB Owners - Service Establishment			OQV			23.09	23.09	21.23	21.23		15.75				
		CNAM For DB Owners - Service Provisioning With Point Code Establishment			OQV			996.62	737.08	270.49	198.89		15.75				
		CNAM For Non DB Owners - Service Provisioning With Point Code Establishment			OQV			344.32	246.56	276.85	198.89		15.75				
		CNAM for DB Owners, Per Query			OQV		0.0010231										
		CNAM for Non DB Owners, Per Query			OQV		0.0010231										
LNP Query Service																	
		LNP Charge Per query			OQV		0.0008477										
		LNP Service Establishment Manual						12.59	12.59	11.58	11.58		15.75				
		LNP Service Provisioning with Point Code Establishment						596.94	304.96	270.49	198.89		15.75				
OPERATOR CALL PROCESSING																	
		Oper. Call Processing - Oper. Provided, Per Min. - Using BST LIDB					1.20										
		Oper. Call Processing - Oper. Provided, Per Min. - Using Foreign LIDB					1.24										
		Oper. Call Processing - Fully Automated, per Call - Using BST LIDB					0.20										
		Oper. Call Processing - Fully Automated, per Call - Using Foreign LIDB					0.20										
INWARD OPERATOR SERVICES																	
		Inward Operator Services - Verification, Per Minute					1.15										
		Inward Operator Services - Verification and Emergency Interrupt - Per Minute					1.15										
BRANDING - OPERATOR CALL PROCESSING																	
	Facility based CLEC																
		Recording of Custom Branded OA Announcement				CBAOS		7,000.00	7,000.00				15.75				
		Loading of Custom Branded OA Announcement per shelf/NAV per OCN				CBAOL		500.00	500.00				15.75				
	UNEP CLEC																
		Recording of Custom Branded OA Announcement						7,000.00	7,000.00				15.75				
		Loading of Custom Branded OA Announcement per shelf/NAV per OCN						500.00	500.00				15.75				
	Unbranding via OLNS for UNEP CLEC																
		Loading of OA per OCN (Regional)						1,200.00	1,200.00				15.75				
DIRECTORY ASSISTANCE SERVICES																	
	DIRECTORY ASSISTANCE ACCESS SERVICE																

UNBUNDLED NETWORK ELEMENTS - Mississippi														Attachment: 2		Exhibit: B	
CATEGORY		RATE ELEMENTS	Interim	Zone	BCS	USOC	RATES ($)					Svc Order Submitted Elec per LSR	Svc Order Submitted Manually per LSR	Incremental Charge - Manual Svc Order vs. Electronic-1st	Incremental Charge - Manual Svc Order vs. Electronic-Add'l	Incremental Charge - Manual Svc Order vs. Electronic-Disc 1st	Incremental Charge - Manual Svc Order vs. Electronic-Disc Add'l
							Rec	Nonrecurring		Nonrecurring Disconnect		OSS Rates($)					
								First	Add'l	First	Add'l	SOMEC	SOMAN	SOMAN	SOMAN	SOMAN	SOMAN
		Directory Assistance Access Service Calls, Charge Per Call					0.275										
	DIRECTORY ASSISTANCE CALL COMPLETION ACCESS SERVICE (DACC)																
		Directory Assistance Call Completion Access Service (DACC), Per Call Attempt					0.10										
DIRECTORY ASSISTANCE SERVICES																	
	DIRECTORY ASSISTANCE DATA BASE SERVICE (DADS)																
		Directory Assistance Data Base Service Charge Per Listing					0.04										
		Directory Assistance Data Base Service, per month				DBSOF	150.00										
BRANDING - DIRECTORY ASSISTANCE																	
	Facility Based CLEC																
		Recording and Provisioning of DA Custom Branded Announcement			AMT	CBADA		3,000.00	3,000.00				15.75				
		Loading of Custom Branded Announcement per Switch per OCN			AMT	CBADC		1,170.00	1,170.00				15.75				
	UNEP CLEC																
		Recording of DA Custom Branded Announcement						3,000.00	3,000.00				15.75				
		Loading of DA Custom Branded Announcement per Switch per OCN						1,170.00	1,170.00				15.75				
	Unbranding via OLNS for UNEP CLEC																
		Loading of DA per OCN (1 OCN per Order)						420.00	420.00				15.75				
		Loading of DA per Switch per OCN						16.00	16.00				15.75				
SELECTIVE ROUTING																	
		Selective Routing Per Unique Line Class Code Per Request Per Switch				USRCR		85.19	85.19	14.19	14.19		15.75				
VIRTUAL COLLOCATION																	
		Virtual Collocation-2 Wire Cross Connects (Loop) for Line Splitting			UEPSR, UEPSB	VE1LS	0.0268	12.37	11.87	6.04	5.45		15.75				
PHYSICAL COLLOCATION																	
		Physical Collocation-2 Wire Cross Connects (Loop) for Line Splitting			UEPSR, UEPSB	PE1LS	0.0288	12.37	11.87	6.04	5.45		15.75				
AIN SELECTIVE CARRIER ROUTING																	
		Regional Service Establishment			SRC	SRCEC		101,685.12		8,640.51			15.75				
		End Office Establishment			SRC	SRCEO		167.49	167.49	1.71	1.71		15.75				
		Query NRC, per query			SRC		0.0030502										
AIN - BELLSOUTH AIN SMS ACCESS SERVICE																	
		AIN SMS Access Service - Service Establishment, Per State, Initial Setup			A1N	CAMSE		39.67	39.67	40.92	40.92		15.75				
		AIN SMS Access Service - Port Connection - Dial/Shared Access			A1N	CAMDP		7.87	7.87	9.14	9.14		15.75				
		AIN SMS Access Service - Port Connection - ISDN Access			A1N	CAM1P		7.87	7.87	9.14	9.14		15.75				
		AIN SMS Access Service - User Identification Codes - Per User ID Code			A1N	CAMAU		35.21	35.21	27.21	27.21		15.75				
		AIN SMS Access Service - Security Card, Per User ID Code, Initial or Replacement			A1N	CAMRC		42.13	42.13	11.78	11.78		15.75				
		AIN SMS Access Service - Storage, Per Unit (100 Kilobytes)					0.0021										
		AIN SMS Access Service - Session, Per Minute					0.5649										
		AIN SMS Access Service - Company Performed Session, Per Minute					0.8393										
AIN - BELLSOUTH AIN TOOLKIT SERVICE																	
		AIN Toolkit Service - Service Establishment Charge, Per State, Initial Setup			CAM	BAPSC		39.67	39.67	40.92	40.92		15.75				
		AIN Toolkit Service - Training Session, Per Customer				BAPVX		4,226.54	4,226.54				15.75				
		AIN Toolkit Service - Trigger Access Charge, Per Trigger, Per DN, Term. Attempt				BAPTT		7.87	7.87	9.14	9.14		15.75				
		AIN Toolkit Service - Trigger Access Charge, Per Trigger, Per DN, Off-Hook Delay				BAPTD		7.87	7.87	9.14	9.14		15.75				
		AIN Toolkit Service - Trigger Access Charge, Per Trigger, Per DN, Off-Hook Immediate				BAPTM		7.87	7.87	9.14	9.14		15.75				

CATEGORY	RATE ELEMENTS	Interim	Zone	BCS	USOC	RATES ($)					Svc Order Submitted Elec per LSR	Svc Order Submitted Manually per LSR	Attachment: 2 Incremental Charge - Manual Svc Order vs. Electronic-1st	Attachment: 2 Incremental Charge - Manual Svc Order vs. Electronic-Add'l	Exhibit: B Incremental Charge - Manual Svc Order vs. Electronic-Disc 1st	Exhibit: B Incremental Charge - Manual Svc Order vs. Electronic-Disc Add'l
						Rec	Nonrecurring		Nonrecurring Disconnect				OSS Rates($)			
							First	Add'l	First	Add'l	SOMEC	SOMAN	SOMAN	SOMAN	SOMAN	SOMAN
	AIN Toolkit Service - Trigger Access Charge, Per Trigger, Per DN, 10-Digit PODP				BAPTO		34.67	34.67	14.44	14.44		15.75				
	AIN Toolkit Service - Trigger Access Charge, Per Trigger, Per DN, CDP				BAPTC		34.67	34.67	14.44	14.44		15.75				
	AIN Toolkit Service - Trigger Access Charge, Per Trigger, Per DN, Feature Code				BAPTF		34.67	34.67	14.44	14.44		15.75				
	AIN Toolkit Service - Query Charge, Per Query					0.0535577										
	AIN Toolkit Service - Type 1 Node Charge, Per AIN Toolkit Subscription, Per Node, Per Query					0.0063509										
	AIN Toolkit Service - SCP Storage Charge, Per SMS Access Account, Per 100 Kilobytes					0.06										
	AIN Toolkit Service - Monthly report - Per AIN Toolkit Service Subscription			CAM	BAPMS	11.11	7.87	7.87	5.54	5.54		15.75				
	AIN Toolkit Service - Special Study - Per AIN Toolkit Service Subscription			CAM	BAPLS	2.71	8.71	8.71				15.75				
	AIN Toolkit Service - Call Event Report - Per AIN Toolkit Service Subscription			CAM	BAPDS	8.48	7.87	7.87	5.54	5.54		15.75				
	AIN Toolkit Service - Call Event Special Study - Per AIN Toolkit Service Subscription			CAM	BAPES	0.09	8.71	8.71				15.75				
ENHANCED EXTENDED LINK (EELs)																
	NOTE: The monthly recurring and non-recurring charges below will apply and the Switch-As-Is Charge will not apply for EELs provisioned as ' Ordinarily Combined' Network Elements.															
	NOTE: The monthly recurring and the Switch-As-Is Charge and not the non-recurring charges below will apply for EELs provisioned as ' Currently Combined' Network Elements.															
	NOTE: Minimum billing is one month for DS1 and below and three months above DS1 services.															
	2-WIRE VOICE GRADE EXTENDED LOOP WITH DEDICATED DS1 INTEROFFICE TRANSPORT (EEL)															
	First 2-Wire VG Loop(SL2) in a DS1 Interofficed Transport Combination - Zone 1		1	UNCVX	UEAL2	13.89	105.96	68.28	52.82	10.37		15.75				
	First 2-Wire VG Grade Loop(SL2) in a DS1 Interofficed Transport Combination - Zone 2		2	UNCVX	UEAL2	18.75	105.96	68.28	52.82	10.37		15.75				
	First 2-Wire VG Grade Loop(SL2) in a DS1 Interofficed Transport Combination - Zone 3		3	UNCVX	UEAL2	27.55	105.96	68.28	52.82	10.37		15.75				
	First 2-Wire VG Loop(SL2) in a DS1 Interofficed Transport Combination - Zone 4		4	UNCVX	UEAL2	45.72	105.96	68.28	52.82	10.37		15.75				
	Interoffice Transport - Dedicated - DS1 combination - Per Mile per month			UNC1X	1L5XX	0.1813										
	Interoffice Transport - Dedicated - DS1 combination - Facility Termination per month			UNC1X	U1TF1	51.72	89.79	82.28	16.86	14.90		15.75				
	DS1 Channelization System Per Month			UNC1X	MQ1	102.85	91.57	62.94	10.87	10.10		15.75				
	Voice Grade COCI - DS1 To Ds0 Interface - Per Month			UNCVX	1D1VG	0.5737	6.62	4.74								
	Each Additional 2-Wire VG Loop(SL 2) in the same DS1 Interoffice Transport Combination - Zone 1		1	UNCVX	UEAL2	13.89	105.96	68.28	52.82	10.37		15.75				
	Each Additional 2-Wire VG Loop(SL2) in the same DS1 Interoffice Transport Combination - Zone 2		2	UNCVX	UEAL2	18.75	105.96	68.28	52.82	10.37		15.75				
	Each Additional 2-Wire VG Loop(SL2) in the same DS1 Interoffice Transport Combination - Zone 3		3	UNCVX	UEAL2	27.55	105.96	68.28	52.82	10.37		15.75				
	Each Additional 2-Wire VG Loop(SL2) in the same DS1 Interoffice Transport Combination - Zone 4		4	UNCVX	UEAL2	45.72	105.96	68.28	52.82	10.37		15.75				
	Voice Grade COCI - DS1 to DS0 Channel System combination - per month			UNCVX	1D1VG	0.5737	6.62	4.74				15.75				
	Nonrecurring Currently Combined Network Elements Switch -As-Is Charge			UNC1X	UNCCC		5.63	5.63	7.20	7.20		15.75				
	4-WIRE VOICE GRADE EXTENDED LOOP WITH DEDICATED DS1 INTEROFFICE TRANSPORT (EEL)															
	First 4-Wire Analog Voice Grade Loop in a DS1 Interoffice Transport Combination - Zone 1		1	UNCVX	UEAL4	27.47	132.27	94.59	60.68	14.64		15.75				
	First 4-Wire Analog Voice Grade Loop in a DS1 Interoffice Transport Combination - Zone 2		2	UNCVX	UEAL4	38.26	132.27	94.59	60.68	14.64		15.75				
	First 4-Wire Analog Voice Grade Loop in a DS1 Interoffice Transport Combination - Zone 3		3	UNCVX	UEAL4	50.03	132.27	94.59	60.68	14.64		15.75				
	First 4-Wire Analog Voice Grade Loop in a DS1 Interoffice Transport Combination - Zone 4		4	UNCVX	UEAL4	50.03	132.27	94.59	60.68	14.64		15.75				

CATEGORY		RATE ELEMENTS	Interim	Zone	BCS	USOC	RATES ($)					Svc Order Submitted Elec per LSR	Svc Order Submitted Manually per LSR	Attachment: 2 Incremental Charge - Manual Svc Order vs. Electronic-1st	Attachment: 2 Incremental Charge - Manual Svc Order vs. Electronic-Add'l	Exhibit: B Incremental Charge - Manual Svc Order vs. Electronic-Disc 1st	Exhibit: B Incremental Charge - Manual Svc Order vs. Electronic-Disc Add'l
							Rec	Nonrecurring		Nonrecurring Disconnect		OSS Rates($)					
								First	Add'l	First	Add'l	SOMEC	SOMAN	SOMAN	SOMAN	SOMAN	SOMAN
		Interoffice Transport - Dedicated - DS1 combination - Per Mile Per Month			UNC1X	1L5XX	0.1813										
		Interoffice Transport - Dedicated - DS1 - Facility Termination Per Month			UNC1X	U1TF1	51.72	89.79	82.28	16.86	14.90		15.75				
		Channelization - Channel System DS1 to DS0 combination Per Month			UNC1X	MQ1	102.85	91.57	62.94	10.87	10.10		15.75				
		Voice Grade COCI - DS1 to DS0 Channel System combination - per month			UNCVX	1D1VG	0.5737	6.62	4.74				15.75				
		Additional 4-Wire Analog Voice Grade Loop in same DS1 Interoffice Transport Combination - Zone 1		1	UNCVX	UEAL4	27.47	132.27	94.59	60.68	14.64		15.75				
		Additional 4-Wire Analog Voice Grade Loop in same DS1 Interoffice Transport Combination - Zone 2		2	UNCVX	UEAL4	38.26	132.27	94.59	60.68	14.64		15.75				
		Additional 4-Wire Analog Voice Grade Loop in same DS1 Interoffice Transport Combination - Zone 3		3	UNCVX	UEAL4	50.03	132.27	94.59	60.68	14.64		15.75				
		Additional 4-Wire Analog Voice Grade Loop in same DS1 Interoffice Transport Combination - Zone 4		4	UNCVX	UEAL4	50.03	132.27	94.59	60.68	14.64		15.75				
		Voice Grade COCI - DS1 to DS0 Channel System combination - per month			UNCVX	1D1VG	0.5737	6.62	4.74				15.75				
		Nonrecurring Currently Combined Network Elements Switch -As-Is Charge			UNC1X	UNCCC		5.63	5.63	7.20	7.20		15.75				
	4-WIRE 56 KBPS EXTENDED DIGITAL LOOP WITH DEDICATED DS1 INTEROFFICE TRANSPORT (EEL)																
		First 4-Wire 56Kbps Digital Grade Loop in a DS1 Interoffice Transport Combination - Zone 1		1	UNCDX	UDL56	27.44	126.53	88.85	60.68	14.64		15.75				
		First 4-wire 56Kbps Digital Grade Loop in a DS1 Interoffice Transport Combination - Zone 2		2	UNCDX	UDL56	34.55	126.53	88.85	60.68	14.64		15.75				
		First 4-Wire 56Kbps Digital Grade Loop in a DS1 Interoffice Transport Combination - Zone 3		3	UNCDX	UDL56	40.76	126.53	88.85	60.68	14.64		15.75				
		First 4-Wire 56Kbps Digital Grade Loop in a DS1 Interoffice Transport Combination - Zone 4		4	UNCDX	UDL56	32.25	126.53	88.85	60.68	14.64		15.75				
		Interoffice Transport - Dedicated - DS1 combination - Per Mile Per Month			UNC1X	1L5XX	0.1813										
		Interoffice Transport - Dedicated - DS1 - combination Facility Termination Per Month			UNC1X	U1TF1	51.72	89.79	82.28	16.86	14.90		15.75				
		Channelization - Channel System DS1 to DS0 combination Per Month			UNC1X	MQ1	102.85	91.57	62.94	10.87	10.10		15.75				
		OCU-DP COCI (data) - DS1 to DS0 Channel System - per month (2.4-64kbs)			UNCDX	1D1DD	1.22	6.62	4.74				15.75				
		Additional 4-Wire 56Kbps Digital Grade Loopin same DS1 Interoffice Transport Combination - Zone 1		1	UNCDX	UDL56	27.44	126.53	88.85	60.68	14.64		15.75				
		Additional 4-Wire 56Kbps Digital Grade Loopin same DS1 Interoffice Transport Combination - Zone 2		2	UNCDX	UDL56	34.55	126.53	88.85	60.68	14.64		15.75				
		Additional 4-Wire 56Kbps Digital Grade Loopin same DS1 Interoffice Transport Combination - Zone 3		3	UNCDX	UDL56	40.76	126.53	88.85	60.68	14.64		15.75				
		Additional 4-Wire 56Kbps Digital Grade Loopin same DS1 Interoffice Transport Combination - Zone 4		4	UNCDX	UDL56	32.25	126.53	88.85	60.68	14.64		15.75				
		OCU-DP COCI (data) - DS1 to DS0 Channel System - combination per month (2.4-64kbs)			UNCDX	1D1DD	1.22	6.62	4.74				15.75				
		Nonrecurring Currently Combined Network Elements Switch -As-Is Charge			UNC1X	UNCCC		5.63	5.63	7.20	7.20		15.75				
	4-WIRE 64 KBPS EXTENDED DIGITAL LOOP WITH DEDICATED DS1 INTEROFFICE TRANSPORT (EEL)																
		First 4-Wire 64Kbps Digital Grade Loop in a DS1 Interoffice Transport Combination - Zone 1		1	UNCDX	UDL64	27.44	126.53	88.85	60.68	14.64		15.75				
		First 4-Wire 64Kbps Digital Grade Loop in a DS1 Interoffice Transport Combination - Zone 2		2	UNCDX	UDL64	34.55	126.53	88.85	60.68	14.64		15.75				
		First 4-Wire 64Kbps Digital Grade Loop in a DS1 Interoffice Transport Combination - Zone 3		3	UNCDX	UDL64	40.76	126.53	88.85	60.68	14.64		15.75				
		First 4-Wire 64Kbps Digital Grade Loop in a DS1 Interoffice Transport Combination - Zone 4		4	UNCDX	UDL64	32.25	126.53	88.85	60.68	14.64		15.75				

CATEGORY		RATE ELEMENTS	Interim	Zone	BCS	USOC	RATES ($)					Svc Order Submitted Elec per LSR	Svc Order Submitted Manually per LSR	Attachment: 2 Incremental Charge - Manual Svc Order vs. Electronic-1st	Attachment: 2 Incremental Charge - Manual Svc Order vs. Electronic-Add'l	Exhibit: B Incremental Charge - Manual Svc Order vs. Electronic-Disc 1st	Exhibit: B Incremental Charge - Manual Svc Order vs. Electronic-Disc Add'l
							Rec	Nonrecurring		Nonrecurring Disconnect		OSS Rates($)					
								First	Add'l	First	Add'l	SOMEC	SOMAN	SOMAN	SOMAN	SOMAN	SOMAN
		Interoffice Transport - Dedicated - DS1 combination - Per Mile Per Month			UNC1X	1L5XX	0.1813										
		Interoffice Transport - Dedicated - DS1 combination - Facility Termination Per Month			UNC1X	U1TF1	51.72	89.79	82.28	16.86	14.90		15.75				
		Channelization - Channel System DS1 to DS0 combination Per Month			UNC1X	MQ1	102.85	91.57	62.94	10.87	10.10		15.75				
		OCU-DP COCI (data) - DS1 to DS0 Channel System combination - per month (2.4-64kbs)			UNCDX	1D1DD	1.22	6.62	4.74				15.75				
		Additional 4-Wire 64Kbps Digital Grade Loopin same DS1 Interoffice Transport Combination - Zone 1		1	UNCDX	UDL64	27.44	126.53	88.85	60.68	14.64		15.75				
		Additional 4-Wire 64Kbps Digital Grade Loopin same DS1 Interoffice Transport Combination - Zone 2		2	UNCDX	UDL64	34.55	126.53	88.85	60.68	14.64		15.75				
		Additional 4-Wire 64Kbps Digital Grade Loopin same DS1 Interoffice Transport Combination - Zone 3		3	UNCDX	UDL64	40.76	126.53	88.85	60.68	14.64		15.75				
		Additional 4-Wire 64Kbps Digital Grade Loopin same DS1 Interoffice Transport Combination - Zone 4		4	UNCDX	UDL64	32.25	126.53	88.85	60.68	14.64		15.75				
		OCU-DP COCI (data) - DS1 to DS0 Channel System combination - per month (2.4-64kbs)			UNCDX	1D1DD	1.22	6.62	4.74				15.75				
		Nonrecurring Currently Combined Network Elements Switch -As-Is Charge			UNC1X	UNCCC		5.63	5.63	7.20	7.20		15.75				
	4-WIRE DS1 DIGITAL EXTENDED LOOP WITH DEDICATED DS1 INTEROFFICE TRANSPORT (EEL)																
		4-Wire DS1 Digital Loop in Combination with DS1 Interoffice Transport - Zone 1		1	UNC1X	USLXX	79.08	253.93	158.45	46.10	12.07		15.75				
		4-Wire DS1 Digital Loop in Combination with DS1 Interoffice Transport - Zone 2		2	UNC1X	USLXX	129.38	253.93	158.45	46.10	12.07		15.75				
		4-Wire DS1 Digital Loop in Combination with DS1 Interoffice Transport - Zone 3		3	UNC1X	USLXX	206.74	253.93	158.45	46.10	12.07		15.75				
		4-Wire DS1 Digital Loop in Combination with DS1 Interoffice Transport - Zone 4		4	UNC1X	USLXX	458.46	253.93	158.45	46.10	12.07		15.75				
		Interoffice Transport - Dedicated - DS1 combination - Per Mile Per Month			UNC1X	1L5XX	0.1813										
		Interoffice Transport - Dedicated - DS1 combination - Facility Termination Per Month			UNC1X	U1TF1	51.72	89.79	82.28	16.86	14.90		15.75				
		Nonrecurring Currently Combined Network Elements Switch -As-Is Charge			UNC1X	UNCCC		5.63	5.63	7.20	7.20		15.75				
	4-WIRE DS1 DIGITAL EXTENDED LOOP WITH DEDICATED DS3 INTEROFFICE TRANSPORT (EEL)																
		First DS1Loop in DS3 Interoffice Transport Combination - Zone 1		1	UNC1X	USLXX	79.08	253.93	158.45	46.10	12.07		15.75				
		First DS1Loop in DS3 Interoffice Transport Combination - Zone 2		2	UNC1X	USLXX	129.38	253.93	158.45	46.10	12.07		15.75				
		First DS1Loop in DS3 Interoffice Transport Combination - Zone 3		3	UNC1X	USLXX	206.74	253.93	158.45	46.10	12.07		15.75				
		First DS1Loop in DS3 Interoffice Transport Combination - Zone 4		4	UNC1X	USLXX	458.46	253.93	158.45	46.10	12.07		15.75				
		Interoffice Transport - Dedicated - DS3 combination - Per Mile Per Month			UNC3X	1L5XX	4.29										
		Interoffice Transport - Dedicated - DS3 - Facility Termination per month			UNC3X	U1TF3	641.90	280.37	163.70	62.08	60.29		15.75				
		DS3 to DS1 Channel System combination per month			UNC3X	MQ3	107.85	179.17	94.52	34.30	32.82		15.75				
		DS3 Interface Unit (DS1 COCI) combination per month			UNC1X	UC1D1	12.96	6.62	4.74								
		Additional DS1Loop in DS3 Interoffice Transport Combination - Zone 1		1	UNC1X	USLXX	79.08	253.93	158.45	46.10	12.07		15.75				
		Additional DS1Loop in DS3 Interoffice Transport Combination - Zone 2		2	UNC1X	USLXX	129.38	253.93	158.45	46.10	12.07		15.75				
		Additional DS1Loop in DS3 Interoffice Transport Combination - Zone 3		3	UNC1X	USLXX	206.74	253.93	158.45	46.10	12.07		15.75				
		Additional DS1Loop in DS3 Interoffice Transport Combination - Zone 4		4	UNC1X	USLXX	458.46	253.93	158.45	46.10	12.07		15.75				
		DS3 Interface Unit (DS1 COCI) combination per month			UNC1X	UC1D1	12.96	6.62	4.74				15.75				

CATEGORY	RATE ELEMENTS	Interim	Zone	BCS	USOC	RATES ($)					Svc Order Submitted Elec per LSR	Svc Order Submitted Manually per LSR	Attachment: 2		Exhibit: B	
													Incremental Charge - Manual Svc Order vs. Electronic-1st	Incremental Charge - Manual Svc Order vs. Electronic-Add'l	Incremental Charge - Manual Svc Order vs. Electronic-Disc 1st	Incremental Charge - Manual Svc Order vs. Electronic-Disc Add'l
						Rec	Nonrecurring		Nonrecurring Disconnect		OSS Rates($)					
							First	Add'l	First	Add'l	SOMEC	SOMAN	SOMAN	SOMAN	SOMAN	SOMAN
	Nonrecurring Currently Combined Network Elements Switch -As-Is Charge			UNC3X	UNCCC		5.63	5.63	7.20	7.20		15.75				
2-WIRE VOICE GRADE EXTENDED LOOP/ 2 WIRE VOICE GRADE INTEROFFICE TRANSPORT (EEL)																
	2-WireVG Loop used with 2-wire VG Interoffice Transport Combination - Zone 1		1	UNCVX	UEAL2	13.89	105.96	68.28	52.82	10.37		15.75				
	2-WireVG Loop used with 2-wire VG Interoffice Transport Combination - Zone 2		2	UNCVX	UEAL2	18.75	105.96	68.28	52.82	10.37		15.75				
	2-WireVG Loop used with 2-wire VG Interoffice Transport Combination - Zone 3		3	UNCVX	UEAL2	27.55	105.96	68.28	52.82	10.37		15.75				
	A.1.2 2-WireVG Loop used with 2-wire VG Interoffice Transport Combination - Zone 4		4	UNCVX	UEAL2	45.72	105.96	68.28	52.82	10.37		15.75				
	Interoffice Transport - Dedicated - 2-wire VG combination - Per Mile Per Month			UNCVX	1L5XX	0.00088										
	Interoffice Transport - Dedicated - 2- Wire Voice Grade combination - Facility Termination per month			UNCVX	U1TV2	20.32	40.77	27.57	17.26	7.11		15.75				
	Nonrecurring Currently Combined Network Elements Switch -As-Is Charge			UNCVX	UNCCC		5.63	5.63	7.20	7.20		15.75				
4-WIRE VOICE GRADE EXTENDED LOOP/ 4 WIRE VOICE GRADE INTEROFFICE TRANSPORT (EEL)																
	4-WireVG Loop used with 4-wire VG Interoffice Transport Combination - Zone 1		1	UNCVX	UEAL4	27.47	132.27	94.59	60.68	14.64		15.75				
	4-WireVG Loop used with 4-wire VG Interoffice Transport Combination - Zone 2		2	UNCVX	UEAL4	38.26	132.27	94.59	60.68	14.64		15.75				
	4-WireVG Loop used with 4-wire VG Interoffice Transport Combination - Zone 3		3	UNCVX	UEAL4	50.03	132.27	94.59	60.68	14.64		15.75				
	4-WireVG Loop used with 4-wire VG Interoffice Transport Combination - Zone 4		4	UNCVX	UEAL4	50.03	132.27	94.59	60.68	14.64		15.75				
	Interoffice Transport - Dedicated - 4-wire VG combination - Per Mile Per Month			UNCVX	1L5XX	0.00088										
	Interoffice Transport - Dedicated - 4- Wire Voice Grade combination - Facility Termination per month			UNCVX	U1TV4	17.86	40.77	27.57	17.26	7.11		15.75				
	Nonrecurring Currently Combined Network Elements Switch -As-Is Charge			UNCVX	UNCCC		5.63	5.63	7.20	7.20		15.75				
DS3 DIGITAL EXTENDED LOOP WITH DEDICATED DS3 INTEROFFICE TRANSPORT (EEL)																
	High Capacity Unbundled Local Loop - DS3 combination - Per Mile per month			UNC3X	1L5ND	11.20										
	High Capacity Unbundled Local Loop - DS3 combination - Facility Termination per month			UNC3X	UE3PX	252.17	454.13	265.47	123.23	86.19		15.75				
	Interoffice Transport - Dedicated - DS3 - Per Mile per month			UNC3X	1L5XX	4.29										
	Interoffice Transport - Dedicated - DS3 combination - Facility Termination per per month			UNC3X	U1TF3	641.90	280.37	163.70	62.08	60.29		15.75				
	Nonrecurring Currently Combined Network Elements Switch -As-Is Charge			UNC3X	UNCCC		5.63	5.63	7.20	7.20		15.75				
STS1 DIGITAL EXTENDED LOOP WITH DEDICATED STS1 INTEROFFICE TRANSPORT (EEL)																
	High Capacity Unbundled Local Loop - STS1 combination - Per Mile per month			UNCSX	1L5ND	11.20										
	High Capacity Unbundled Local Loop - STS1 combination - Facility Termination per month			UNCSX	UDLS1	264.35	454.13	265.47	123.23	86.19		15.75				
	Interoffice Transport - Dedicated - STS1 combination - Per Mile per month			UNCSX	1L5XX	4.29										
	Interoffice Transport - Dedicated - STS1 combination - Facility Termination per month			UNCSX	U1TFS	644.21	280.37	163.70	62.08	60.29		15.75				
	Nonrecurring Currently Combined Network Elements Switch -As-Is Charge			UNCSX	UNCCC		5.63	5.63	7.20	7.20		15.75				
2-WIRE ISDN EXTENDED LOOP WITH DS1 INTEROFFICE TRANSPORT (EEL)																
	First 2-Wire ISDN Loop in a DS1 Interoffice Combination Transport - Zone 1		1	UNCNX	U1L2X	21.01	117.61	79.92	52.82	10.37		15.75				
	First 2-Wire ISDN Loop in a DS1 Interoffice Combination Transport - Zone 2		2	UNCNX	U1L2X	27.59	117.61	79.92	52.82	10.37		15.75				

CATEGORY	RATE ELEMENTS	Interim	Zone	BCS	USOC	RATES ($)					Svc Order Submitted Elec per LSR	Svc Order Submitted Manually per LSR	Attachment: 2 Incremental Charge - Manual Svc Order vs. Electronic-1st	Attachment: 2 Incremental Charge - Manual Svc Order vs. Electronic-Add'l	Exhibit: B Incremental Charge - Manual Svc Order vs. Electronic-Disc 1st	Exhibit: B Incremental Charge - Manual Svc Order vs. Electronic-Disc Add'l
						Rec	Nonrecurring		Nonrecurring Disconnect		OSS Rates($)					
							First	Add'l	First	Add'l	SOMEC	SOMAN	SOMAN	SOMAN	SOMAN	SOMAN
	First 2-Wire ISDN Loop in a DS1 Interoffice Combination Transport - Zone 3		3	UNCNX	U1L2X	37.34	117.61	79.92	52.82	10.37		15.75				
	First 2-Wire ISDN Loop in a DS1 Interoffice Combination Transport - Zone 4		4	UNCNX	U1L2X	59.18	117.61	79.92	52.82	10.37		15.75				
	Interoffice Transport - Dedicated - DS1 combination - Per Mile			UNC1X	1L5XX	0.1813										
	Interoffice Transport - Dedicated - DS1 combintion - Facility Termination per month			UNC1X	U1TF1	51.72	89.79	82.28	16.86	14.90		15.75				
	Channelization - Channel System DS1 to DS0 combination - per month			UNC1X	MQ1	102.85	91.57	62.94	10.87	10.10		15.75				
	2-wire ISDN COCI (BRITE) - DS1 to DS0 Channel System combination - per month			UNCNX	UC1CA	2.62	6.62	4.74				15.75				
	Additional 2-wire ISDN Loop in same DS1Interoffice Transport Combination - Zone 1		1	UNCNX	U1L2X	21.01	117.61	79.92	52.82	10.37		15.75				
	Additional 2-wire ISDN Loop in same DS1Interoffice Transport Combination - Zone 2		2	UNCNX	U1L2X	27.59	117.61	79.92	52.82	10.37		15.75				
	Additional 2-wire ISDN Loop in same DS1Interoffice Transport Combination - Zone 3		3	UNCNX	U1L2X	37.34	117.61	79.92	52.82	10.37		15.75				
	Additional 2-wire ISDN Loop in same DS1Interoffice Transport Combination - Zone 4		4	UNCNX	U1L2X	59.18	117.61	79.92	52.82	10.37		15.75				
	2-wire ISDN COCI (BRITE) - DS1 to DS0 Channel System combintaion- per month			UNCNX	UC1CA	2.62	6.62	4.74				15.75				
	Nonrecurring Currently Combined Network Elements Switch -As-Is Charge			UNC1X	UNCCC		5.63	5.63	7.20	7.20		15.75				
4-WIRE DS1 DIGITAL EXTENDED LOOP WITH DEDICATED STS-1 INTEROFFICE TRANSPORT (EEL)																
	First DS1 Loop in STS1 Interoffice Transport Combination - Zone 1		1	UNC1X	USLXX	79.08	253.93	158.45	46.10	12.07		15.75				
	First DS1 Loop in STS1 Interoffice Transport Combination - Zone 2		2	UNC1X	USLXX	129.38	253.93	158.45	46.10	12.07		15.75				
	First DS1 Loop in STS1 Interoffice Transport Combination - Zone 3		3	UNC1X	USLXX	206.74	253.93	158.45	46.10	12.07		15.75				
	First DS1 Loop in STS1 Interoffice Transport Combination - Zone 4		4	UNC1X	USLXX	458.46	253.93	158.45	46.10	12.07		15.75				
	Interoffice Transport - Dedicated - STS1 combination - Per Mile Per Month			UNCSX	1L5XX	4.29										
	Interoffice Transport - Dedicated - STS1 combination - Facility Termination			UNCSX	U1TFS	644.21	280.37	163.70	62.08	60.29		15.75				
	STS1 to DS1 Channel System conbination per month			UNCSX	MQ3	107.63	179.17	94.52	34.30	32.82		15.75				
	DS3 Interface Unit (DS1 COCI) combination per month			UNC1X	UC1D1	12.96	6.62	4.74				15.75				
	Additional DS1Loop in STS1 Interoffice Transport Combination - Zone 1		1	UNC1X	USLXX	79.08	253.93	158.45	46.10	12.07		15.75				
	Additional DS1Loop in STS1 Interoffice Transport Combination - Zone 2		2	UNC1X	USLXX	129.38	253.93	158.45	46.10	12.07		15.75				
	Additional DS1Loop in STS1 Interoffice Transport Combination - Zone 3		3	UNC1X	USLXX	206.74	253.93	158.45	46.10	12.07		15.75				
	Additional DS1Loop in STS1 Interoffice Transport Combination - Zone 4		4	UNC1X	USLXX	458.46	253.93	158.45	46.10	12.07		15.75				
	DS3 Interface Unit (DS1 COCI) combination per month			UNC1X	UC1D1	12.96	6.62	4.74				15.75				
	Nonrecurring Currently Combined Network Elements Switch -As-Is Charge			UNCSX	UNCCC		5.63	5.63	7.20	7.20		15.75				
4-WIRE 56 KBPS DIGITAL EXTENDED LOOP WITH 56 KBPS INTEROFFICE TRANSPORT (EEL)																
	4-wire 56 kbps Loop/4-wire 56 kbps Interoffice Transport Combination - Zone 1		1	UNCDX	UDL56	27.44	126.53	88.85	60.68	14.64		15.75				
	4-wire 56 kbps Loop/4-wire 56 kbps Interoffice Transport Combination - Zone 2		2	UNCDX	UDL56	34.55	126.53	88.85	60.68	14.64		15.75				
	4-wire 56 kbps Loop/4-wire 56 kbps Interoffice Transport Combination - Zone 3		3	UNCDX	UDL56	40.76	126.53	88.85	60.68	14.64		15.75				
	4-wire 56 kbps Loop/4-wire 56 kbps Interoffice Transport Combination - Zone 4		4	UNCDX	UDL56	32.25	126.53	88.85	60.68	14.64		15.75				

CATEGORY	RATE ELEMENTS	Interim	Zone	BCS	USOC	RATES ($) Rec	Nonrecurring First	Nonrecurring Add'l	Nonrecurring Disconnect First	Nonrecurring Disconnect Add'l	Svc Order Submitted Elec per LSR	Svc Order Submitted Manually per LSR	Attachment: 2 Incremental Charge - Manual Svc Order vs. Electronic-1st	Attachment: 2 Incremental Charge - Manual Svc Order vs. Electronic-Add'l	Exhibit: B Incremental Charge - Manual Svc Order vs. Electronic-Disc 1st	Exhibit: B Incremental Charge - Manual Svc Order vs. Electronic-Disc Add'l
											OSS Rates($)					
											SOMEC	SOMAN	SOMAN	SOMAN	SOMAN	SOMAN
	Interoffice Transport - Dedicated - 4-wire 56 kbps combination - Per Mile			UNCDX	1L5XX	0.00088										
	Interoffice Transport - Dedicated - 4-wire 56 kbps combination - Facility Termination			UNCDX	U1TD5	14.14	40.78	27.57	17.26	7.11		15.75				
	Nonrecurring Currently Combined Network Elements Switch -As-Is Charge			UNCDX	UNCCC		5.63	5.63	7.20	7.20		15.75				
	4-WIRE 64 KBPS DIGITAL EXTENDED LOOP WITH 64 KBPS INTEROFFICE TRANSPORT (EEL)															
	4-wire 64 kbps Loop/4-wire 64 kbps Interoffice Transport Combination - Zone 1		1	UNCDX	UDL64	27.44	126.53	88.85	60.68	14.64		15.75				
	4-wire 64 kbps Loop/4-wire 64 kbps Interoffice Transport Combination - Zone 2		2	UNCDX	UDL64	34.55	126.53	88.85	60.68	14.64		15.75				
	4-wire 64 kbps Loop/4-wire 64 kbps Interoffice Transport Combination - Zone 3		3	UNCDX	UDL64	40.76	126.53	88.85	60.68	14.64		15.75				
	4-wire 64 kbps Loop/4-wire 64 kbps Interoffice Transport Combination - Zone 4		4	UNCDX	UDL64	32.25	126.53	88.85	60.68	14.64		15.75				
	Interoffice Transport - Dedicated - 4-wire 64 kbps combination - Per Mile			UNCDX	1L5XX	0.00088										
	Interoffice Transport - Dedicated - 4-wire 64 kbps combination - Facility Termination			UNCDX	U1TD6	14.14	40.78	27.57	17.26	7.11		15.75				
	Nonrecurring Currently Combined Network Elements Switch -As-Is Charge			UNCDX	UNCCC		5.63	5.63	7.20	7.20		15.75				
ADDITIONAL NETWORK ELEMENTS																
	When used as a part of a currently combined facility, the non-recurrng charges do not apply, but a Switch As Is charge does apply.															
	When used as ordinarily combined network elements in All States, the non-recurring charges apply and the Switch As Is Charge does not.															
	Nonrecurring Currently Combined Network Elements "Switch As Is" Charge (One applies to each combination)															
	Nonrecurring Currently Combined Network Elements Switch -As-Is Charge - 2 wire/4-Wire VG			UNCVX	UNCCC		5.63	5.63	7.20	7.20		15.75				
	Nonrecurring Currently Combined Network Elements Switch -As-Is Charge - 56/64 kbps			UNCDX	UNCCC		5.63	5.63	7.20	7.20		15.75				
	Nonrecurring Currently Combined Network Elements Switch -As-Is Charge - DS1			UNC1X	UNCCC		5.63	5.63	7.20	7.20		15.75				
	Nonrecurring Currently Combined Network Elements Switch -As-Is Charge - DS3			UNC3X	UNCCC		5.63	5.63	7.20	7.20		15.75				
	Nonrecurring Currently Combined Network Elements Switch -As-Is Charge - STS1			UNCSX	UNCCC		5.63	5.63	7.20	7.20		15.75				
	NOTE: Local Channel - Dedicated Transport - minimum billing period - Below DS3=one month, DS3 and above=four months															
	Local Channel - Dedicated - 2-Wire Voice Grade			UNCVX	ULDV2	14.91	194.22	33.36	37.79	3.30		15.75				
	Local Channel - Dedicated - 4-Wire Voice Grade			UNCVX	ULDV4	15.99	194.66	33.80	38.27	3.78		15.75				
	Local Channel - Dedicated - DS1 per month Zone 1		1	UNC1X	ULDF1	36.83	178.50	154.61	22.89	15.74		15.75				
	Local Channel - Dedicated -DS1 Per Month Zone 2		2	UNC1X	ULDF1	35.99	178.50	154.61	22.89	15.74		15.75				
	Local Channel - Dedicated - DS1- Per Month Zone 3		3	UNC1X	ULDF1	221.63	178.50	154.61	22.89	15.74		15.75				
	Local Channel - Dedicated - DS1- Per Month Zone 4		4	UNC1X	ULDF1	221.63	178.50	154.61	22.89	15.74		15.75				
	Local Channel - Dedicated - DS3 - Per Mile per month			UNC3X	1L5NC	9.66										
	Local Channel - Dedicated - DS3 - Facility Termination			UNC3X	ULDF3	413.87	454.13	265.47	123.23	86.19		15.75				
	Local Channel - Dedicated - STS-1- Per Mile per month			UNCSX	1L5NC	9.66										
	Local Channel - Dedicated - STS-1 - Facility Termination			UNCSX	ULDFS	408.02	454.13	265.47	123.23	86.19		15.75				
	Optional Features & Functions:															
	Clear Channel Capability (SF/ESF) Option - Subsequent Activity - per DS1	I		ULDD1, U1TD1, UNC1X, USL	NRCCC		65.06					15.75				
	C-bit Parity Option - Subsequent Activity - per DS3	i		U1TD3, ULDD3, UE3, UNC3X	NRCC3		50.06					15.75				
	MULTIPLEXERS															
	NOTE: minimum billing period is one month for DS1 to DS0 Channel System and interfaces															
	NOTE: minimum billing period is three months for DS3 to DS1 Channel System and interfaces															
	DS1 to DS0 Channel System (with the higher-level connected to a collocation in the same SWC) per month			UXTD1	MQ1	102.85	91.57	62.94	10.87	10.10		15.75				
	DS1 to DS0 Channel System (used to channelize a DS1 Local Channel) per month			ULDD1	MQ1	102.85	91.57	62.94	10.87	10.10		15.75				

UNBUNDLED NETWORK ELEMENTS - Mississippi														Attachment: 2		Exhibit: B	
CATEGORY	RATE ELEMENTS	Interim	Zone	BCS	USOC	RATES ($)					Svc Order Submitted Elec per LSR	Svc Order Submitted Manually per LSR	Incremental Charge - Manual Svc Order vs. Electronic-1st	Incremental Charge - Manual Svc Order vs. Electronic-Add'l	Incremental Charge - Manual Svc Order vs. Electronic-Disc 1st	Incremental Charge - Manual Svc Order vs. Electronic-Disc Add'l
						Rec	Nonrecurring		Nonrecurring Disconnect				OSS Rates($)			
							First	Add'l	First	Add'l	SOMEC	SOMAN	SOMAN	SOMAN	SOMAN	SOMAN
	DS1 to DS0 Channel System (used to channelize a DS1 Interoffice Channel) per month			U1TD1	MQ1	102.85	91.57	62.94	10.87	10.10		15.75				
	OCU-DP COCI (data) - DS1 to DS0 Channel System - per month (2.4-64kbs) used for a Local Loop			UDL	1D1DD	1.22	6.62	4.74				15.75				
	OCU-DP COCI (data) - DS1 to DS0 Channel System - per month (2.4-64kbs) used for connection to a channelized DS1 Local Channel in the same SWC as collocation			U1TUD	1D1DD	1.22	6.62	4.74				15.75				
	2-wire ISDN COCI (BRITE) - DS1 to DS0 Channel Systsem - per month for a Local Loop			UDN	UC1CA	2.62	6.62	4.74				15.75				
	2-wire ISDN COCI (BRITE) - DS1 to DS0 Channel Systsem - per month used for connection to a channelized DS1 Local Channel in the same SWC as collocation			U1TUB	UC1CA	2.62	6.62	4.74				15.75				
	Voice Grade COCI - DS1 to DS0 Channel System - per month used for a Local Loop			UEA	1D1VG	0.5737	6.62	4.74				15.75				
	Voice Grade COCI - DS1 to DS0 Channel System - per month used for connection to a channelized DS1 Local Channel in the same SWC as collocation			U1TUC	1D1VG	0.5737	6.62	4.74				15.75				
	DS3 to DS1 Channel System (with the higher level connected to a collocation in the same SWC) per month			UXTD3	MQ3	170.63	179.17	94.52	34.30	32.82		15.75				
	DS3 to DS1 Channel System (used to channelize a DS3 Local Channel) per month			ULDD3	MQ3	170.63	179.17	94.52	34.30	32.82		15.75				
	DS3 to DS1 Channel System (used to channelize a DS3 Interoffice Channel per month			U1TD3	MQ3	170.63	179.17	94.52	34.30	32.82		15.75				
	STS-1 to DS1 Channel System (with the higher level connected to a collocation in the same SWC) per month			UXTS1	MQ3	170.63	179.17	94.52	34.30	32.82		15.75				
	STS-1 to DS1 Channel System (used to channelize a STS-1 Local Channel) per month			ULDS1	MQ3	170.63	179.17	94.52	34.30	32.82		15.75				
	STS-1 to DS1 Channel System (used to channelize a STS-1 Interoffice Channel) per month			U1TS1	MQ3	170.63	179.17	94.52	34.30	32.82		15.75				
	DS1 COCI used with Loop per month			USL	UC1D1	12.96	6.62	4.74				15.75				
	DS1 COCI (used for connection to a channelized DS1 Local Channel in the same SWC as collocation) per month			U1TUA	UC1D1	12.96	6.62	4.74				15.75				
	DS1 COCI used with Interoffice Channel per month			U1TD1	UC1D1	12.96	6.62	4.74				15.75				
Sub-Loop Feeder																
	Unbundled Sub-Loop Feeder Loop, 4-Wire DS1 - Zone 1		1	UNC1X	USBFG	55.19	101.97	64.29	63.68	17.64						
	Unbundled Sub-Loop Feeder Loop, 4-Wire DS1 - Zone 2		2	UNC1X	USBFG	100.03	101.97	64.29	63.68	17.64						
	Unbundled Sub-Loop Feeder Loop, 4-Wire DS1 - Zone 3		3	UNC1X	USBFG	183.66	101.97	64.29	63.68	17.64						
	Unbundled Sub-Loop Feeder Loop, 4-Wire DS1 - Zone 4		4	UNC1X	USBFG	430.04	101.97	64.29	63.68	17.64						
UNBUNDLED LOCAL EXCHANGE SWITCHING(PORTS)																
Exchange Ports																
NOTE: Although the Port Rate includes all available features in GA, KY, LA & TN, the desired features will need to be ordered using retail USOCs																
2-WIRE VOICE GRADE LINE PORT RATES (RES)																
	Exchange Ports - 2-Wire Analog Line Port- Res.			UEPSR	UEPRL	1.41	2.39	2.29	1.42	1.33		15.75				
	Exchange Ports - 2-Wire Analog Line Port with Caller ID - Res.			UEPSR	UEPRC	1.41	2.39	2.29	1.42	1.33		15.75				
	Exchange Ports - 2-Wire Analog Line Port outgoing only - Res.			UEPSR	UEPRO	1.41	2.39	2.29	1.42	1.33		15.75				
	Exchange Ports - 2-Wire VG unbundled MS extended local dialing parity Port with Caller ID - Res.			UEPSR	UEPAT	1.41	2.39	2.29	1.42	1.33		15.75				
	Exchange Ports - 2-Wire VG unbundled res, low usage line port with Caller ID (LUM)			UEPSR	UEPAP	1.41	2.39	2.29	1.42	1.33		15.75				
	Exchange Ports - 2-Wire Voice Mississippi Residence Dialing Plan without Caller ID			UEPSR	UEPWJ	1.41	2.39	2.29	1.42	1.33		15.75				
	2-Wire voice unbundled Low Usage Line Port without Caller ID Capability			UEPSR	UEPRT	1.41	2.39	2.29	1.42	1.33		15.75				
	Subsequent Activity			UEPSR	USASC	0.00	0.00	0.00				15.75				
FEATURES																
	All Available Vertical Features			UEPSR	UEPVF	2.56	0.00	0.00				15.75				
2-WIRE VOICE GRADE LINE PORT RATES (BUS)																

CATEGORY	RATE ELEMENTS	Interim	Zone	BCS	USOC	RATES ($)					Svc Order Submitted Elec per LSR	Svc Order Submitted Manually per LSR	Incremental Charge - Manual Svc Order vs. Electronic-1st	Incremental Charge - Manual Svc Order vs. Electronic-Add'l	Incremental Charge - Manual Svc Order vs. Electronic-Disc 1st	Incremental Charge - Manual Svc Order vs. Electronic-Disc Add'l
						Rec	Nonrecurring		Nonrecurring Disconnect		OSS Rates($)					
							First	Add'l	First	Add'l	SOMEC	SOMAN	SOMAN	SOMAN	SOMAN	SOMAN
	Exchange Ports - 2-Wire Analog Line Port without Caller ID - Bus			UEPSB	UEPBL	1.41	2.39	2.29	1.42	1.33		15.75				
	Exchange Ports - 2-Wire VG unbundled Line Port with unbundled port with Caller+E484 ID - Bus.			UEPSB	UEPBC	1.41	2.39	2.29	1.42	1.33		15.75				
	Exchange Ports - 2-Wire Analog Line Port outgoing only - Bus.			UEPSB	UEPBO	1.41	2.39	2.29	1.42	1.33		15.75				
	Exchange Ports - 2-Wire VG unbundled MS extended local dialing parity Port with Caller ID - Bus.			UEPSB	UEPAY	1.41	2.39	2.29	1.42	1.33		15.75				
	Exhange Ports - 2-Wire VG unbundled incoming only port with Caller ID - Bus			UEPSB	UEPB1	1.41	2.39	2.29	1.42	1.33		15.75				
	Exchange Ports - 2-Wire Voice Mississippi Business Dialing Plan without Caller ID			UEPSB	UEPWK	1.41	2.39	2.29	1.42	1.33		15.75				
	2-Wire voice unbundled Incoming Only Port without Caller ID Capability			UEPSB	UEPBE	1.41	2.39	2.29	1.42	1.33		15.75				
	Subsequent Activity			UEPSB	USASC	0.00	0.00	0.00				15.75				
FEATURES																
	All Available Vertical Features			UEPSB	UEPVF	2.56	0.00	0.00				15.75				
EXCHANGE PORT RATES (DID & PBX)																
	2-Wire VG Unbundled 2-Way PBX Trunk - Res			UEPSE	UEPRD	1.41	31.45	14.93	14.38	0.92		15.75				
	2-Wire VG Line Side Unbundled 2-Way PBX Trunk - Bus			UEPSP	UEPPC	1.41	31.45	14.93	14.38	0.92		15.75				
	2-Wire VG Line Side Unbundled Outward PBX Trunk - Bus			UEPSP	UEPPO	1.41	31.45	14.93	14.38	0.92		15.75				
	2-Wire VG Line Side Unbundled Incoming PBX Trunk - Bus			UEPSP	UEPP1	1.41	31.45	14.93	14.38	0.92		15.75				
	2-Wire Analog Long Distance Terminal PBX Trunk - Bus			UEPSP	UEPLD	1.41	31.45	14.93	14.38	0.92		15.75				
	2-Wire Voice Unbundled PBX LD Terminal Ports			UEPSP	UEPLD	1.41	31.45	14.93	14.38	0.92		15.75				
	2-Wire Vice Unbundled 2-Way PBX Usage Port			UEPSP	UEPXA	1.41	31.45	14.93	14.38	0.92		15.75				
	2-Wire Voice Unbundled PBX Toll Terminal Hotel Ports			UEPSP	UEPXB	1.41	31.45	14.93	14.38	0.92		15.75				
	2-Wire Voice Unbundled PBX LD DDD Terminals Port			UEPSP	UEPXC	1.41	31.45	14.93	14.38	0.92		15.75				
	2-Wire Voice Unbundled PBX LD Terminal Switchboard Port			UEPSP	UEPXD	1.41	31.45	14.93	14.38	0.92		15.75				
	2-Wire Voice Unbundled PBX LD Terminal Switchboard IDD Capable Port			UEPSP	UEPXE	1.41	31.45	14.93	14.38	0.92		15.75				
	2-Wire Voice Unbundled 2-Way PBX Hotel/Hospital Economy Administrative Calling Port			UEPSP	UEPXL	1.41	31.45	14.93	14.38	0.92		15.75				
	2-Wire Voice Unbundled 2-Way PBX Hotel/Hospital Economy Room Calling Port			UEPSP	UEPXM	1.41	31.45	14.93	14.38	0.92		15.75				
	2-Wire Voice Unbundled 1-Way Outgoing PBX Hotel/Hospital Discount Room Calling Port			UEPSP	UEPXO	1.41	31.45	14.93	14.38	0.92		15.75				
	2-Wire Voice Unbundled 2-Way PBX Mississippi Local Economy Calling Port			UEPSP	UEPXQ	1.41	31.45	14.93	14.38	0.92		15.75				
	2-Wire Voice Unbundled 2-Way PBX Mississippi Local Optional Calling Port			UEPSP	UEPXR	1.41	31.45	14.93	14.38	0.92		15.75				
	2-Wire Voice Unbundled PBX Port, Mississippi only			UEPSP	UEPA5	1.41	31.45	14.93	14.38	0.92		15.75				
	2-Wire Voice Unbundled 1-Way Outgoing PBX Measured Port			UEPSP	UEPXS	1.41	31.45	14.93	14.38	0.92		15.75				
	Subsequent Activity			UEPSP	USASC	0.00	0.00	0.00				15.75				
FEATURES																
	All Available Vertical Features			UEPSP UEPSE	UEPVF	2.56	0.00	0.00				15.75				
EXCHANGE PORT RATES (COIN)																
	Exchange Ports - Coin Port					1.41	2.39	2.29	1.42	1.33		15.75				
NOTE: Transmission/usage charges associated with POTS circuit switched usage will also apply to circuit switched voice and/or circuit switched data transmission by B-Channels associated with 2-wire ISDN ports.																
NOTE: Access to B Channel or D Channel Packet capabilities will be available only through BFR/New Business Request Process. Rates for the packet capabilities will be determined via the Bona Fide Request/New Business Request Process.																
UNBUNDLED LOCAL EXCHANGE SWITCHING(PORTS)																
EXCHANGE PORT RATES																
	Exchange Ports - 2-Wire DID Port			UEPEX	UEPP2	8.25	120.00	18.85	61.77	3.88		15.75				
	Exchange Ports - DDITS Port - 4-Wire DS1 Port with DID capability			UEPDD	UEPDD	58.41	203.19	96.25	74.86	2.54		15.75				
	Exchange Ports - 2-Wire ISDN Port (See Notes below.)			UEPTX UEPSX	U1PMA	13.69	73.19	53.30	47.90	10.76		15.75				
	All Features Offered			UEPTX UEPSX	UEPVF	2.56	0.00	0.00				15.75				
NOTE: Transmission/usage charges associated with POTS circuit switched usage will also apply to circuit switched voice and/or circuit switched data transmission by B-Channels associated with 2-wire ISDN ports.																
NOTE: Access to B Channel or D Channel Packet capabilities will be available only through BFR/New Business Request Process. Rates for the packet capabilities will be determined via the Bona Fide Request/New Business Request Process.																
	Exchange Ports - 2-Wire ISDN Port -- Channel Profiles			UEPTX UEPSX	U1UMA	0.00	0.00	0.00								

UNBUNDLED NETWORK ELEMENTS - Mississippi													Attachment: 2		Exhibit: B	
CATEGORY	RATE ELEMENTS	Interim	Zone	BCS	USOC	RATES ($)					Svc Order Submitted Elec per LSR	Svc Order Submitted Manually per LSR	Incremental Charge - Manual Svc Order vs. Electronic-1st	Incremental Charge - Manual Svc Order vs. Electronic-Add'l	Incremental Charge - Manual Svc Order vs. Electronic-Disc 1st	Incremental Charge - Manual Svc Order vs. Electronic-Disc Add'l
						Rec	Nonrecurring		Nonrecurring Disconnect				OSS Rates($)			
							First	Add'l	First	Add'l	SOMEC	SOMAN	SOMAN	SOMAN	SOMAN	SOMAN
	Exchange Ports - 4-Wire ISDN DS1 Port			UEPEX	UEPEX	84.63	205.00	102.14	81.65	20.69		15.75				
UNBUNDLED PORT with REMOTE CALL FORWARDING CAPABILITY																
UNBUNDLED REMOTE CALL FORWARDING SERVICE - RESIDENCE																
	Unbundled Remote Call Forwarding Service, Area Calling, Res			UEPVR	UERAC	1.41	2.39	2.29	1.42	1.33		15.75				
	Unbundled Remote Call Forwarding Service, Local Calling - Res			UEPVR	UERLC	1.41	2.39	2.29	1.42	1.33		15.75				
	Unbundled Remote Call Forwarding Service, InterLATA - Res			UEPVR	UERTE	1.41	2.39	2.29	1.42	1.33		15.75				
	Unbundled Remote Call Forwarding Service, IntraLATA - Res			UEPVR	UERTR	1.41	2.39	2.29	1.42	1.33		15.75				
Non-Recurring																
	Unbundled Remote Call Forwarding Service - Conversion - Switch-as-is			UEPVR	USAC2		0.0988	0.0988				15.75				
	Unbundled Remote Call Forwarding Service - Conversion with allowed change (PIC and LPIC)			UEPVR	USACC		0.0988	0.0988								
UNBUNDLED REMOTE CALL FORWARDING - Bus																
	Unbundled Remote Call Forwarding Service, Area Calling - Bus			UEPVB	UERAC	1.41	2.39	2.29	1.42	1.33		15.75				
	Unbundled Remote Call Forwarding Service, Local Calling - Bus			UEPVB	UERLC	1.41	2.39	2.29	1.42	1.33		15.75				
	Unbundled Remote Call Forwarding Service, InterLATA - Bus			UEPVB	UERTE	1.41	2.39	2.29	1.42	1.33		15.75				
	Unbundled Remote Call Forwarding Service, IntraLATA - Bus			UEPVB	UERTR	1.41	2.39	2.29	1.42	1.33		15.75				
	Unbundled Remote Call Forwarding Service Expanded and Exception Local Calling			UEPVB	UERVJ	1.41	2.39	2.29	1.42	1.33		15.75				
Non-Recurring																
	Unbundled Remote Call Forwarding Service - Conversion - Switch-as-is			UEPVB	USAC2		0.0988	0.0988				15.75				
	Unbundled Remote Call Forwarding Service - Conversion with allowed change (PIC and LPIC)			UEPVB	USACC		0.0988	0.0988								
UNBUNDLED LOCAL SWITCHING, PORT USAGE																
End Office Switching (Port Usage)																
	End Office Switching Function, Per MOU					0.0010269										
	End Office Trunk Port - Shared, Per MOU					0.000161										
Tandem Switching (Port Usage) (Local or Access Tandem)																
	Tandem Switching Function Per MOU					0.0001723										
	Tandem Trunk Port - Shared, Per MOU					0.0001828										
Common Transport																
	Common Transport - Per Mile, Per MOU					0.0000026										
	Common Transport - Facilities Termination Per MOU					0.0004541										
UNBUNDLED PORT/LOOP COMBINATIONS - COST BASED RATES																
Cost Based Rates are applied where BellSouth is required by FCC and/or State Commission rule to provide Unbundled Local Switching or Switch Ports.																
Features shall apply to the Unbundled Port/Loop Combination - Cost Based Rate section in the same manner as they are applied to the Stand-Alone Unbundled Port section of this Rate Exhibit.																
End Office and Tandem Switching Usage and Common Transport Usage rates in the Port section of this rate exhibit shall apply to all combinations of loop/port network elements except for UNE Coin Port/Loop Combinations.																
The first and additional Port nonrecurring charges apply to Not Currently Combined Combos. For Currently Combined Combos the nonrecurring charges shall be those identified in the Nonrecurring - Currently Combined sections.																
2-WIRE VOICE GRADE LOOP WITH 2-WIRE LINE PORT (RES)																
UNE Port/Loop Combination Rates																
	2-Wire VG Loop/Port Combo - Zone 1		1			12.22										
	2-Wire VG Loop/Port Combo - Zone 2		2			17.13										
	2-Wire VG Loop/Port Combo - Zone 3		3			26.26										
	2-Wire VG Loop/Port Combo - Zone 4		4			44.91										
UNE Loop Rates																
	2-Wire Voice Grade Loop (SL1) - Zone 1		1	UEPRX	UEPLX	10.98										
	2-Wire Voice Grade Loop (SL1) - Zone 2		2	UEPRX	UEPLX	15.91										
	2-Wire Voice Grade Loop (SL1) - Zone 3		3	UEPRX	UEPLX	25.04										
	2-Wire Voice Grade Loop (SL1) - Zone 4		4	UEPRX	UEPLX	43.68										
2-Wire Voice Grade Line Port Rates (Res)																
	2-Wire voice unbundled port - residence			UEPRX	UEPRL	1.23	40.31	19.84	24.90	6.58		15.75				
	2-Wire voice unbundled port with Caller ID - res			UEPRX	UEPRC	1.23	40.31	19.84	24.90	6.58		15.75				
	2-Wire voice unbundled port outgoing only - res			UEPRX	UEPRO	1.23	40.31	19.84	24.90	6.58		15.75				
	2-Wire voice Grade unbundled Mississippi extended local dialing parity port with Caller ID - res			UEPRX	UEPAT	1.23	40.31	19.84	24.90	6.58		15.75				

UNBUNDLED NETWORK ELEMENTS - Mississippi														Attachment: 2		Exhibit: B	
CATEGORY		RATE ELEMENTS	Interim	Zone	BCS	USOC	RATES ($)					Svc Order Submitted Elec per LSR	Svc Order Submitted Manually per LSR	Incremental Charge - Manual Svc Order vs. Electronic-1st	Incremental Charge - Manual Svc Order vs. Electronic-Add'l	Incremental Charge - Manual Svc Order vs. Electronic-Disc 1st	Incremental Charge - Manual Svc Order vs. Electronic-Disc Add'l
							Rec	Nonrecurring		Nonrecurring Disconnect		OSS Rates($)					
								First	Add'l	First	Add'l	SOMEC	SOMAN	SOMAN	SOMAN	SOMAN	SOMAN
		2-Wire voice unbundles res, low usage line port with Caller ID (LUM)			UEPRX	UEPAP	1.23	40.31	19.84	24.90	6.58		15.75				
		2-Wire Voice Unbundled Mississippi Residence Dialing Plan without Caller ID			UEPRX	UEPWJ	1.23	40.31	19.84	24.90	6.58		15.75				
		2-Wire voice unbundled Low Usage Line Port without Caller ID Capability			UEPRX	UEPRT	1.23	40.31	19.84	24.90	6.58		15.75				
	FEATURES																
		All Features Offered			UEPRX	UEPVF	2.56	0.00	0.00				15.75				
	LOCAL NUMBER PORTABILITY																
		Local Number Portability (1 per port)			UEPRX	LNPCX	0.35										
	NONRECURRING CHARGES (NRCs) - CURRENTLY COMBINED																
		2-Wire Voice Grade Loop / Line Port Combination - Conversion - Switch-as-is			UEPRX	USAC2		0.0988	0.0988				15.75				
		2-Wire Voice Grade Loop / Line Port Combination - Conversion - Switch with change			UEPRX	USACC		0.0988	0.0988				15.75				
		2-Wire Voice Grade Loop / Line Port Combination - Conversion - Subsequent Database Update						0.00	0.00				15.75				
	ADDITIONAL NRCs																
		2-Wire Voice Grade Loop/Line Port Combination - Subsequent Activity			UEPRX	USAS2	0.00	0.00	0.00				15.75				
	2-WIRE VOICE GRADE LOOP WITH 2-WIRE LINE PORT (BUS)																
	UNE Port/Loop Combination Rates																
		2-Wire VG Loop/Port Combo - Zone 1		1			12.22										
		2-Wire VG Loop/Port Combo - Zone 2		2			17.13										
		2-Wire VG Loop/Port Combo - Zone 3		3			26.26										
	UNE Loop Rates																
		2-Wire Voice Grade Loop (SL1) - Zone 1		1	UEPBX	UEPLX	10.98										
		2-Wire Voice Grade Loop (SL1) - Zone 2		2	UEPBX	UEPLX	15.91										
		2-Wire Voice Grade Loop (SL1) - Zone 3		3	UEPBX	UEPLX	25.04										
		2-Wire Voice Grade Loop (SL1) - Zone 4		4	UEPBX	UEPLX	43.68										
	2-Wire Voice Grade Line Port (Bus)																
		2-Wire voice unbundled port without Caller ID - bus			UEPBX	UEPBL	1.23	40.31	19.84	24.90	6.58		15.75				
		2-Wire voice unbundled port with Caller + E484 ID - bus			UEPBX	UEPBC	1.23	40.31	19.84	24.90	6.58		15.75				
		2-Wire voice unbundled port outgoing only - bus			UEPBX	UEPBO	1.23	40.31	19.84	24.90	6.58		15.75				
		2-Wire voice Grade unbundled Mississippi extended local dialing parity port with Caller ID - bus			UEPBX	UEPAY	1.23	40.31	19.84	24.90	6.58		15.75				
		2-Wire voice unbundled incoming only port with Caller ID - Bus			UEPBX	UEPB1	1.23	40.31	19.84	24.90	6.58		15.75				
		2-Wire Voice Unbundled Mississippi Business Dialing Plan without Caller ID			UEPBX	UEPWK	1.23	40.31	19.84	24.90	6.58		15.75				
		2-Wire voice unbundled Incoming Only Port without Caller ID Capability			UEPBX	UEPBE	1.23	40.31	19.84	24.90	6.58		15.75				
	LOCAL NUMBER PORTABILITY																
		Local Number Portability (1 per port)			UEPBX	LNPCX	0.35										
	FEATURES																
		All Features Offered			UEPBX	UEPVF	2.56	0.00	0.00				15.75				
	NONRECURRING CHARGES (NRCs) - CURRENTLY COMBINED																
		2-Wire Voice Grade Loop / Line Port Combination - Conversion - Switch-as-is			UEPBX	USAC2		0.0988	0.0988				15.75				
		2-Wire Voice Grade Loop / Line Port Combination - Conversion - Switch with change			UEPBX	USACC		0.0988	0.0988				15.75				
		2-Wire Voice Grade Loop / Line Port Combination - Conversion - Subsequent Database Update						0.00	0.00				15.75				
	ADDITIONAL NRCs																
		2-Wire Voice Grade Loop/Line Port Combination - Subsequent Activity			UEPBX	USAS2		0.00	0.00				15.75				
	2-WIRE VOICE GRADE LOOP WITH 2-WIRE LINE PORT (RES - PBX)																
	UNE Port/Loop Combination Rates																
		2-Wire VG Loop/Port Combo - Zone 1		1			12.22										
		2-Wire VG Loop/Port Combo - Zone 2		2			17.13										

CATEGORY	RATE ELEMENTS	Interim	Zone	BCS	USOC	RATES ($)					Svc Order Submitted Elec per LSR	Svc Order Submitted Manually per LSR	Attachment: 2 Incremental Charge - Manual Svc Order vs. Electronic-1st	Attachment: 2 Incremental Charge - Manual Svc Order vs. Electronic-Add'l	Exhibit: B Incremental Charge - Manual Svc Order vs. Electronic-Disc 1st	Exhibit: B Incremental Charge - Manual Svc Order vs. Electronic-Disc Add'l
						Rec	Nonrecurring		Nonrecurring Disconnect		OSS Rates($)					
							First	Add'l	First	Add'l	SOMEC	SOMAN	SOMAN	SOMAN	SOMAN	SOMAN
	2-Wire VG Loop/Port Combo - Zone 3		3			26.26										
	2-Wire VG Loop/Port Combo - Zone 4		4			44.91										
UNE Loop Rates																
	2-Wire Voice Grade Loop (SL 1) - Zone 1		1	UEPRG	UEPLX	10.98										
	2-Wire Voice Grade Loop (SL 1) - Zone 2		2	UEPRG	UEPLX	15.91										
	2-Wire Voice Grade Loop (SL 1) - Zone 3		3	UEPRG	UEPLX	25.04										
	2-Wire Voice Grade Loop (SL 1) - Zone 4		4	UEPRG	UEPLX	43.68										
2-Wire Voice Grade Line Port Rates (RES - PBX)																
	2-Wire VG Unbundled Combination 2-Way PBX Trunk Port - Res			UEPRG	UEPRD	1.23	69.37	32.48	37.86	6.17		15.75				
LOCAL NUMBER PORTABILITY																
	Local Number Portability (1 per port)			UEPRG	LNPCP	3.15	0.00	0.00				15.75				
FEATURES																
	All Features Offered			UEPRG	UEPVF	2.56	0.00	0.00				15.75				
NONRECURRING CHARGES (NRCs) - CURRENTLY COMBINED																
	2-Wire Voice Grade Loop/ Line Port Combination (PBX) - Conversion - Switch-As-Is			UEPRG	USAC2		7.96	1.91				15.75				
	2-Wire Voice Grade Loop/ Line Port Combination (PBX) - Conversion - Switch with Change			UEPRG	USACC		7.96	1.91				15.75				
	2-Wire Voice Grade Loop / Line Port Combination - Conversion - Subsequent Database Update						0.00	0.00				15.75				
ADDITIONAL NRCs																
	2-Wire Voice Grade Loop/ Line Port Combination (PBX) - Subsequent Activity			UEPRG	USAS2	0.00	0.00	0.00				15.75				
	PBX Subsequent Activity - Change/Rearrange Multiline Hunt Group						7.36	7.36				15.75				
2-WIRE VOICE GRADE LOOP WITH 2-WIRE LINE PORT (BUS - PBX)																
UNE Port/Loop Combination Rates																
	2-Wire VG Loop/Port Combo - Zone 1		1			12.22										
	2-Wire VG Loop/Port Combo - Zone 2		2			17.13										
	2-Wire VG Loop/Port Combo - Zone 3		3			26.26										
	2-Wire VG Loop/Port Combo - Zone 4		4			44.91										
UNE Loop Rates																
	2-Wire Voice Grade Loop (SL 1) - Zone 1		1	UEPPX	UEPLX	10.98										
	2-Wire Voice Grade Loop (SL 1) - Zone 2		2	UEPPX	UEPLX	15.91										
	2-Wire Voice Grade Loop (SL 1) - Zone 3		3	UEPPX	UEPLX	25.04										
	2-Wire Voice Grade Loop (SL 1) - Zone 4		4	UEPPX	UEPLX	43.68										
2-Wire Voice Grade Line Port Rates (BUS - PBX)																
	Line Side Unbundled Combination 2-Way PBX Trunk Port - Bus			UEPPX	UEPPC	1.23	69.37	32.48	37.86	6.17		15.75				
	Line Side Unbundled Outward PBX Trunk Port - Bus			UEPPX	UEPPO	1.23	69.37	32.48	37.86	6.17		15.75				
	Line Side Unbundled Incoming PBX Trunk Port - Bus			UEPPX	UEPP1	1.23	69.37	32.48	37.86	6.17		15.75				
	2-Wire Voice Unbundled PBX LD Terminal Ports			UEPPX	UEPLD	1.23	69.37	32.48	37.86	6.17		15.75				
	2-Wire Voice Unbundled 2-Way Combination PBX Usage Port			UEPPX	UEPXA	1.23	69.37	32.48	37.86	6.17		15.75				
	2-Wire Voice Unbundled PBX Toll Terminal Hotel Ports			UEPPX	UEPXB	1.23	69.37	32.48	37.86	6.17		15.75				
	2-Wire Voice Unbundled PBX LD DDD Terminals Port			UEPPX	UEPXC	1.23	69.37	32.48	37.86	6.17		15.75				
	2-Wire Voice Unbundled PBX LD Terminal Switchboard Port			UEPPX	UEPXD	1.23	69.37	32.48	37.86	6.17		15.75				
	2-Wire Voice Unbundled PBX LD Terminal Switchboard IDD Capable Port			UEPPX	UEPXE	1.23	69.37	32.48	37.86	6.17		15.75				
	2-Wire Voice Unbundled 2-Way PBX Hotel/Hospital Economy Administrative Calling Port			UEPPX	UEPXL	1.23	69.37	32.48	37.86	6.17		15.75				
	2-Wire Voice Unbundled 2-Way PBX Hotel/Hospital Economy Room Calling Port			UEPPX	UEPXM	1.23	69.37	32.48	37.86	6.17		15.75				
	2-Wire Voice Unbundled 1-Way Outgoing PBX Hotel/Hospital Discount Room Calling Port			UEPPX	UEPXO	1.23	69.37	32.48	37.86	6.17		15.75				
	2-Wire Voice Unbundled 2-Way PBX Mississippi Local Economy Calling Port			UEPPX	UEPXQ	1.23	69.37	32.48	37.86	6.17		15.75				
	2-Wire Voice Unbundled 2-Way PBX Mississippi Local Optional Calling Port			UEPPX	UEPXR	1.23	69.37	32.48	37.86	6.17		15.75				

CATEGORY	RATE ELEMENTS	Interim	Zone	BCS	USOC	RATES ($)					Svc Order Submitted Elec per LSR	Svc Order Submitted Manually per LSR	Attachment: 2 Incremental Charge - Manual Svc Order vs. Electronic-1st	Attachment: 2 Incremental Charge - Manual Svc Order vs. Electronic-Add'l	Exhibit: B Incremental Charge - Manual Svc Order vs. Electronic-Disc 1st	Exhibit: B Incremental Charge - Manual Svc Order vs. Electronic-Disc Add'l
						Rec	Nonrecurring		Nonrecurring Disconnect		OSS Rates($)					
							First	Add'l	First	Add'l	SOMEC	SOMAN	SOMAN	SOMAN	SOMAN	SOMAN
	2-Wire Voice Unbundled 1-Way Outgoing PBX Measured Port			UEPPX	UEPXS	1.23	69.37	32.48	37.86	6.17		15.75				
	Mississippi PBX 2-Way Combo Local Opt 2 Calling Port			UEPPX	UEPA5	1.23	69.37	32.48	37.86	6.17		15.75				
LOCAL NUMBER PORTABILITY																
	Local Number Portability (1 per port)			UEPPX	LNPCP	3.15	0.00	0.00				15.75				
FEATURES																
	All Features Offered			UEPPX	UEPVF	2.56	0.00	0.00				15.75				
NONRECURRING CHARGES (NRCs) - CURRENTLY COMBINED																
	2-Wire Voice Grade Loop/ Line Port Combination (PBX) - Conversion - Switch-As-Is			UEPPX	USAC2		7.96	1.91				15.75				
	2-Wire Voice Grade Loop/ Line Port Combination (PBX) - Conversion - Switch with Change			UEPPX	USACC		7.96	1.91				15.75				
	2-Wire Voice Grade Loop / Line Port Combination - Conversion - Subsequent Database Update						0.00	0.00				15.75				
ADDITIONAL NRCs																
	2-Wire Voice Grade Loop/ Line Port Combination (PBX) - Subsequent Activity			UEPPX	USAS2	0.00	0.00	0.00				15.75				
	PBX Subsequent Activity - Change/Rearrange Multiline Hunt Group						7.36	7.36				15.75				
2-WIRE VOICE GRADE LOOP WITH 2-WIRE ANALOG LINE COIN PORT																
UNE Port/Loop Combination Rates																
	2-Wire VG Coin Port/Loop Combo – Zone 1		1			12.22										
	2-Wire VG Coin Port/Loop Combo – Zone 2		2			17.13										
	2-Wire VG Coin Port/Loop Combo – Zone 3		3			26.26										
	2-Wire VG Coin Port/Loop Combo – Zone 4		4			44.91										
UNE Loop Rates																
	2-Wire Voice Grade Loop (SL1) - Zone 1		1	UEPCO	UEPLX	10.98										
	2-Wire Voice Grade Loop (SL1) - Zone 2		2	UEPCO	UEPLX	15.91										
	2-Wire Voice Grade Loop (SL1) - Zone 3		3	UEPCO	UEPLX	25.04										
	2-Wire Voice Grade Loop (SL1) - Zone 4		4	UEPCO	UEPLX	43.68										
2-Wire Voice Grade Line Ports (COIN)																
	2-Wire Coin 2-Way without Operator Screening and without Blocking (AL, KY, LA, MS)			UEPCO	UEPRF	1.23	40.31	19.84	24.90	6.58		15.75				
	2-Wire Coin 2-Way without Operator Screening and without Blocking; with Dialing Parity (Note 3) (MS)			UEPCO	UEPMC	1.23	40.31	19.84	24.90	6.58		15.75				
	2-Wire Coin 2-Way with Operator Screening and Blocking: 011, 900/976, 1+DDD (AL, KY, LA, MS)			UEPCO	UEPRA	1.23	40.31	19.84	24.90	6.58		15.75				
	2-Wire Coin 2-W with Operator Screening and Blocking: 011, 900/976, 1+DDD; with Dialing Parity (MS)			UEPCO	UEPMA	1.23	40.31	19.84	24.90	6.58		15.75				
	2-Wire Coin 2-Way with Operator Screening and 011 Blocking (AL, LA, MS)			UEPCO	UEPRB	1.23	40.31	19.84	24.90	6.58		15.75				
	2-Wire Coin 2-Way with Operator Screening and 011 Blocking; with Dialing Parity (MS)			UEPCO	UEPMB	1.23	40.31	19.84	24.90	6.58		15.75				
	2-Wire Coin 2-Way with Operator Screening & Blocking: 900/976, 1+DDD, 011+, & Local (AL, KY, LA, MS)			UEPCO	UEPCD	1.23	40.31	19.84	24.90	6.58		15.75				
	2-Wire Coin 2-W Operator Screening: 900 Block: 900/976, 1+DDD, 011+, Local; with Dialing Parity (MS)			UEPCO	UEPCJ	1.23	40.31	19.84	24.90	6.58		15.75				
	2-Wire Coin Outward without Blocking and without Operator Screening (KY, LA, MS)			UEPCO	UEPRN	1.23	40.31	19.84	24.90	6.58		15.75				
	2-Wire Coin Outward without Blocking and without Operator Screening; With Dailing Parity (MS)			UEPCO	UEPME	1.23	40.31	19.84	24.90	6.58		15.75				
	2-Wire Coin Outward with Operator Screening and 011 Blocking (GA, KY, MS)			UEPCO	UEPRJ	1.23	40.31	19.84	24.90	6.58		15.75				
	2-Wire Coin Outward with Operator Screening and 011 Blocking; with Dialing Parity (MS)			UEPCO	UEPMD	1.23	40.31	19.84	24.90	6.58		15.75				
	2-Wire Coin Outward with Operator Screening and Blocking: 011, 900/976, 1+DDD (AL, KY, LA, MS)			UEPCO	UEPRH	1.23	40.31	19.84	24.90	6.58		15.75				
	2-Wire Coin Outward Operator Screening & Blocking: 900/976, 1+DDD, 011+, and Local (AL, KY, LA, MS)			UEPCO	UEPCN	1.23	40.31	19.84	24.90	6.58		15.75				

UNBUNDLED NETWORK ELEMENTS - Mississippi														Attachment: 2		Exhibit: B	
CATEGORY	RATE ELEMENTS	Interim	Zone	BCS	USOC	RATES ($)					Svc Order Submitted Elec per LSR	Svc Order Submitted Manually per LSR	Incremental Charge - Manual Svc Order vs. Electronic-1st	Incremental Charge - Manual Svc Order vs. Electronic-Add'l	Incremental Charge - Manual Svc Order vs. Electronic-Disc 1st	Incremental Charge - Manual Svc Order vs. Electronic-Disc Add'l
						Rec	Nonrecurring		Nonrecurring Disconnect		OSS Rates($)					
							First	Add'l	First	Add'l	SOMEC	SOMAN	SOMAN	SOMAN	SOMAN	SOMAN
	2-Wire Coin Out Operator Screen & Block: 900/976, 1+DDD, 011+, and Local; with Dialing Parity (MS)			UEPCO	UEPCS	1.23	40.31	19.84	24.90	6.58		15.75				
	2-Wire 2-Way Smartline with 900/976 (all states except LA)			UEPCO	UEPCK	1.23	40.31	19.84	24.90	6.58		15.75				
	2-Wire Coin Outward Smartline with 900/976 (all states except LA)			UEPCO	UEPCR	1.23	40.31	19.84	24.90	6.58		15.75				
ADDITIONAL UNE COIN PORT/LOOP (RC)																
	UNE Coin Port/Loop Combo Usage (Flat Rate)			UEPCO	URECU	4.62	0.00	0.00	0.00	0.00						
LOCAL NUMBER PORTABILITY																
	Local Number Portability (1 per port)			UEPCO	LNPCX	0.35										
NONRECURRING CHARGES - CURRENTLY COMBINED																
	2-Wire Voice Grade Loop / Line Port Combination - Conversion - Switch-as-is			UEPCO	USAC2		0.0988	0.0988				15.75				
	2-Wire Voice Grade Loop / Line Port Combination - Conversion - Switch with change			UEPCO	USACC		0.0988	0.0988				15.75				
ADDITIONAL NRCs																
	2-Wire Voice Grade Loop/Line Port Combination - Subsequent Activity			UEPCO	USAS2		0.00	0.00				15.75				
2-WIRE VOICE LOOP/ 2WIRE VOICE GRADE IO TRANSPORT/ 2-WIRE LINE PORT (RES)																
UNE Port/Loop Combination Rates																
	2-Wire VG Loop/IO Tranport/Port Combo - Zone 1		1			15.16										
	2-Wire VG Loop/IO Tranport/Port Combo - Zone 2		2			20.02										
	2-Wire VG Loop/IO Tranport/Port Combo - Zone 3		3			28.82										
	2-Wire VG Loop/IO Tranport/Port Combo - Zone 4		4			46.99										
UNE Loop Rates																
	2-Wire Voice Grade Loop (SL2) - Zone 1		1	UEPFR	UECF2	13.89										
	2-Wire Voice Grade Loop (SL2) - Zone 2		2	UEPFR	UECF2	18.75										
	2-Wire Voice Grade Loop (SL2) - Zone 3		3	UEPFR	UECF2	27.55										
	2-Wire Voice Grade Loop (SL2) - Zone 4		4	UEPFR	UECF2	45.72										
2-Wire Voice Grade Line Port Rates (Res)																
	2-Wire voice unbundled port - residence			UEPFR	UEPRL	1.27	108.35	70.57	54.24	11.70		15.75				
	2-Wire voice unbundled port with Caller ID - res			UEPFR	UEPRC	1.27	108.35	70.57	54.24	11.70		15.75				
	2-Wire voice unbundled port outgoing only - res			UEPFR	UEPRO	1.27	108.35	70.57	54.24	11.70		15.75				
	2-Wire voice Grade unbundled Mississippi extended local dialing parity port with Caller ID - res			UEPFR	UEPAT	1.27	108.35	70.57	54.24	11.70		15.75				
	2-Wire voice unbundles res, low usage line port with Caller ID (LUM)			UEPFR	UEPAP	1.27	108.35	70.57	54.24	11.70		15.75				
	2-Wire Voice Unbundled Mississippi Residence Dialing Plan without Caller ID			UEPFR	UEPWJ	1.27	108.35	70.57	54.24	11.70		15.75				
INTEROFFICE TRANSPORT																
	Interoffice Transport - Dedicated - 2 Wire Voice Grade - Facility Termination			UEPFR	U1TV2	20.32	40.77	27.57	17.26	7.11						
	Interoffice Transport - Dedicated - 2 Wire Voice Grade - Per Mile or Fraction Mile			UEPFR	1L5XX	0.0088										
FEATURES																
	All Features Offered			UEPFR	UEPVF	2.56	0.00	0.00				15.75				
LOCAL NUMBER PORTABILITY																
	Local Number Portability (1 per port)			UEPFR	LNPCX	0.35										
NONRECURRING CHARGES (NRCs) - CURRENTLY COMBINED																
	2-Wire Loop / Dedicated IO Transport / 2 Wire Line Port Combination - Conversion - Switch-as-is			UEPFR	USAC2		16.94	3.72				15.75				
	2-Wire Loop / Dedicated IO Transport / 2 Wire Line Port Combination - Conversion - Switch-With-Change			UEPFR	USACC		16.94	3.72				15.75				
2-WIRE VOICE LOOP/ 2WIRE VOICE GRADE IO TRANSPORT/ 2-WIRE LINE PORT (BUS)																
UNE Port/Loop Combination Rates																
	2-Wire VG Loop/IO Tranport/Port Combo - Zone 1		1			15.16										
	2-Wire VG Loop/IO Tranport/Port Combo - Zone 2		2			20.02										
	2-Wire VG Loop/IO Tranport/Port Combo - Zone 3		3			28.82										
	2-Wire VG Loop/IO Tranport/Port Combo - Zone 4		4			46.99										
UNE Loop Rates																

UNBUNDLED NETWORK ELEMENTS - Mississippi														Attachment: 2		Exhibit: B	
CATEGORY	RATE ELEMENTS	Interim	Zone	BCS	USOC	RATES ($)					Svc Order Submitted Elec per LSR	Svc Order Submitted Manually per LSR	Incremental Charge - Manual Svc Order vs. Electronic-1st	Incremental Charge - Manual Svc Order vs. Electronic-Add'l	Incremental Charge - Manual Svc Order vs. Electronic-Disc 1st	Incremental Charge - Manual Svc Order vs. Electronic-Disc Add'l
						Rec	Nonrecurring		Nonrecurring Disconnect		OSS Rates($)					
							First	Add'l	First	Add'l	SOMEC	SOMAN	SOMAN	SOMAN	SOMAN	SOMAN
	2-Wire Voice Grade Loop (SL2) - Zone 1		1	UEPFB	UECF2	13.89										
	2-Wire Voice Grade Loop (SL2) - Zone 2		2	UEPFB	UECF2	18.75										
	2-Wire Voice Grade Loop (SL2) - Zone 3		3	UEPFB	UECF2	27.55										
	2-Wire Voice Grade Loop (SL2) - Zone 4		4	UEPFB	UECF2	45.72										
2-Wire Voice Grade Line Port (Bus)																
	2-Wire voice unbundled port without Caller ID - bus			UEPFB	UEPBL	1.27	108.35	70.57	54.24	11.70		15.75				
	2-Wire voice unbundled port with Caller + E484 ID - bus			UEPFB	UEPBC	1.27	108.35	70.57	54.24	11.70		15.75				
	2-Wire voice unbundled port outgoing only - bus			UEPFB	UEPBO	1.27	108.35	70.57	54.24	11.70		15.75				
	2-Wire voice Grade unbundled Mississippi extended local dialing parity port with Caller ID - bus			UEPFB	UEPAY	1.27	108.35	70.57	54.24	11.70		15.75				
	2-Wire voice unbundled incoming only port with Caller ID - Bus			UEPFB	UEPB1	1.27	108.35	70.57	54.24	11.70		15.75				
	2-Wire Voice Unbundled Mississippi Business Dialing Plan without Caller ID			UEPFB	UEPWK	1.27	108.35	70.57	54.24	11.70		15.75				
LOCAL NUMBER PORTABILITY																
	Local Number Portability (1 per port)			UEPFB	LNPCX	0.35										
INTEROFFICE TRANSPORT																
	Interoffice Transport - Dedicated - 2 Wire Voice Grade - Facility Termination			UEPFB	U1TV2	20.32	40.77	27.57	17.26	7.11						
	Interoffice Transport - Dedicated - 2 Wire Voice Grade - Per Mile or Fraction Mile			UEPFB	1L5XX	0.0088										
FEATURES																
	All Features Offered			UEPFB	UEPVF	2.56	0.00	0.00				15.75				
NONRECURRING CHARGES (NRCs) - CURRENTLY COMBINED																
	2-Wire Loop / Dedicated IO Transport / 2 Wire Line Port Combination - Conversion - Switch-as-is			UEPFB	USAC2		16.94	3.72				15.75				
	2-Wire Loop / Dedicated IO Transport / 2 Wire Line Port Combination - Conversion - Switch with change			UEPFB	USACC		16.94	3.72				15.75				
2-WIRE VOICE GRADE LOOP WITH 2-WIRE LINE PORT (BUS - PBX)																
UNE Port/Loop Combination Rates																
	2-Wire VG Loop/IO Tranport/Port Combo - Zone 1		1			15.16										
	2-Wire VG Loop/IO Tranport/Port Combo - Zone 2		2			20.02										
	2-Wire VG Loop/IO Tranport/Port Combo - Zone 3		3			28.82										
	2-Wire VG Loop/IO Tranport/Port Combo - Zone 4		4			46.99										
UNE Loop Rates																
	2-Wire Voice Grade Loop (SL2) - Zone 1		1	UEPFP	UECF2	13.89										
	2-Wire Voice Grade Loop (SL2) - Zone 2		2	UEPFP	UECF2	18.75										
	2-Wire Voice Grade Loop (SL2) - Zone 3		3	UEPFP	UECF2	27.55										
	2-Wire Voice Grade Loop (SL2) - Zone 4		4	UEPFP	UECF2	45.72										
2-Wire Voice Grade Line Port Rates (BUS - PBX)																
	Line Side Unbundled Combination 2-Way PBX Trunk Port - Bus			UEPFP	UEPPC	1.27	137.41	80.14	67.20	11.29		15.75				
	Line Side Unbundled Outward PBX Trunk Port - Bus			UEPFP	UEPPO	1.27	137.41	80.14	67.20	11.29		15.75				
	Line Side Unbundled Incoming PBX Trunk Port - Bus			UEPFP	UEPP1	1.27	137.41	80.14	67.20	11.29		15.75				
	2-Wire Voice Unbundled PBX LD Terminal Ports			UEPFP	UEPLD	1.27	137.41	80.14	67.20	11.29		15.75				
	2-Wire Voice Unbundled 2-Way Combination PBX Usage Port			UEPFP	UEPXA	1.27	137.41	80.14	67.20	11.29		15.75				
	2-Wire Voice Unbundled PBX Toll Terminal Hotel Ports			UEPFP	UEPXB	1.27	137.41	80.14	67.20	11.29		15.75				
	2-Wire Voice Unbundled PBX LD DDD Terminals Port			UEPFP	UEPXC	1.27	137.41	80.14	67.20	11.29		15.75				
	2-Wire Voice Unbundled PBX LD Terminal Switchboard Port			UEPFP	UEPXD	1.27	137.41	80.14	67.20	11.29		15.75				
	2-Wire Voice Unbundled PBX LD Terminal Switchboard IDD Capable Port			UEPFP	UEPXE	1.27	137.41	80.14	67.20	11.29		15.75				
	2-Wire Voice Unbundled 2-Way PBX Hotel/Hospital Economy Administrative Calling Port			UEPFP	UEPXL	1.27	137.41	80.14	67.20	11.29		15.75				
	2-Wire Voice Unbundled 2-Way PBX Hotel/Hospital Economy Room Calling Port			UEPFP	UEPXM	1.27	137.41	80.14	67.20	11.29		15.75				
	2-Wire Voice Unbundled 1-Way Outgoing PBX Hotel/Hospital Discount Room Calling Port			UEPFP	UEPXO	1.27	137.41	80.14	67.20	11.29		15.75				
	2-Wire Voice Unbundled 2-Way PBX Mississippi Local Economy Calling Port			UEPFP	UEPXQ	1.27	137.41	80.14	67.20	11.29		15.75				

UNBUNDLED NETWORK ELEMENTS - Mississippi														Attachment: 2		Exhibit: B	
CATEGORY		RATE ELEMENTS	Interim	Zone	BCS	USOC	RATES ($)					Svc Order Submitted Elec per LSR	Svc Order Submitted Manually per LSR	Incremental Charge - Manual Svc Order vs. Electronic-1st	Incremental Charge - Manual Svc Order vs. Electronic-Add'l	Incremental Charge - Manual Svc Order vs. Electronic-Disc 1st	Incremental Charge - Manual Svc Order vs. Electronic-Disc Add'l
							Rec	Nonrecurring		Nonrecurring Disconnect				OSS Rates($)			
								First	Add'l	First	Add'l	SOMEC	SOMAN	SOMAN	SOMAN	SOMAN	SOMAN
		2-Wire Voice Unbundled 2-Way PBX Mississippi Local Optional Calling Port			UEPFP	UEPXR	1.27	137.41	80.14	67.20	11.29		15.75				
		2-Wire Voice Unbundled 1-Way Outgoing PBX Measured Port			UEPFP	UEPXS	1.27	137.41	80.14	67.20	11.29		15.75				
		Mississippi PBX 2-Way Combo Local Opt 2 Calling Port			UEPFP	UEPA5	1.27	137.41	80.14	67.20	11.29		15.75				
	LOCAL NUMBER PORTABILITY																
		Local Number Portability (1 per port)			UEPFP	LNPCP	3.15	0.00	0.00				15.75				
	INTEROFFICE TRANSPORT																
		Interoffice Transport - Dedicated - 2 Wire Voice Grade - Facility Termination			UEPFP	U1TV2	20.32	40.77	27.57	17.26	7.11						
		Interoffice Transport - Dedicated - 2 Wire Voice Grade - Per Mile or Fraction Mile			UEPFP	1L5XX	0.0088										
	FEATURES																
		All Features Offered			UEPFP	UEPVF	2.56	0.00	0.00				15.75				
	NONRECURRING CHARGES (NRCs) - CURRENTLY COMBINED																
		2-Wire Loop / Dedicated IO Transport / 2 Wire Line Port Combination - Conversion - Switch-as-is			UEPFP	USAC2		16.94	3.72				15.75				
		2-Wire Loop / Dedicated IO Transport / 2 Wire Line Port Combination - Conversion - Switch with change			UEPFP	USACC		16.94	3.72				15.75				
UNBUNDLED PORT/LOOP COMBINATIONS - COST BASED RATES																	
	2-WIRE VOICE GRADE LOOP- BUS ONLY - WITH 2-WIRE DID TRUNK PORT																
	UNE Port/Loop Combination Rates																
		2-Wire VG Loop/2-Wire DID Trunk Port Combo - UNE Zone 1		1			21.32										
		2-Wire VG Loop/2-Wire DID Trunk Port Combo - UNE Zone 2		2			26.16										
		2-Wire VG Loop/2-Wire DID Trunk Port Combo - UNE Zone 3		3			34.98										
		2-Wire VG Loop/2-Wire DID Trunk Port Combo - UNE Zone 4		4			53.15										
	UNE Loop Rates																
		2-Wire Analog Voice Grade Loop - (SL2) - UNE Zone 1		1	UEPPX	UECD1	13.89										
		2-Wire Analog Voice Grade Loop - (SL2) - UNE Zone 2		2	UEPPX	UECD1	18.75										
		2-Wire Analog Voice Grade Loop - (SL2) - UNE Zone 3		3	UEPPX	UECD1	27.55										
		2-Wire Analog Voice Grade Loop - (SL2) - UNE Zone 4		4	UEPPX	UECD1	45.72										
	UNE Port Rate																
		Exchange Ports - 2-Wire DID Port			UEPPX	UEPD1	7.43	225.96	87.13	114.59	14.25		15.75			1.97	
	NONRECURRING CHARGES - CURRENTLY COMBINED																
		2-Wire Voice Grade Loop / 2-Wire DID Trunk Port Combination - Switch-as-is			UEPPX	USAC1		7.35	1.88				15.75			1.97	
		2-Wire Voice Grade Loop / 2-Wire DID Trunk Port Conversion with BellSouth Allowable Changes			UEPPX	USA1C		7.35	1.88				15.75			1.97	
	ADDITIONAL NRCs																
		2-Wire DID Subsequent Activity - Add Trunks, Per Trunk			UEPPX	USAS1		26.94	26.94				15.75			1.97	
	Telephone Number/Trunk Group Establisment Charges																
		DID Trunk Termination (One Per Port)			UEPPX	NDT	0.00	0.00	0.00				15.75			1.97	
		Additional DID Numbers for each Group of 20 DID Numbers			UEPPX	ND4	0.00	0.00	0.00				15.75			1.97	
		DID Numbers, Non- consecutive DID Numbers , Per Number			UEPPX	ND5	0.00	0.00	0.00				15.75			1.97	
		Reserve Non-Consecutive DID numbers			UEPPX	ND6	0.00	0.00	0.00				15.75			1.97	
		Reserve DID Numbers			UEPPX	NDV	0.00	0.00	0.00				15.75			1.97	
	LOCAL NUMBER PORTABILITY																
		Local Number Portability (1 per port)			UEPPX	LNPCP	3.15	0.00	0.00								
	2-WIRE ISDN DIGITAL GRADE LOOP WITH 2-WIRE ISDN DIGITAL LINE SIDE PORT																
	UNE Port/Loop Combination Rates																
		2W ISDN Digital Grade Loop/2W ISDN Digital Line Side Port - UNE Zone 1		1	UEPPB UEPPR		28.59										
		2W ISDN Digital Grade Loop/2W ISDN Digital Line Side Port - UNE Zone 2		2	UEPPB UEPPR		35.00										
		2W ISDN Digital Grade Loop/2W ISDN Digital Line Side Port - UNE Zone 3		3	UEPPB UEPPR		45.18										
		2W ISDN Digital Grade Loop/2W ISDN Digital Line Side Port - UNE Zone 4		4			67.61										
	UNE Loop Rates																
		2-Wire ISDN Digital Grade Loop - UNE Zone 1		1	UEPPB UEPPR	USL2X	18.26						15.75			1.97	

CATEGORY	RATE ELEMENTS	Interim	Zone	BCS	USOC	RATES ($)					Svc Order Submitted Elec per LSR	Svc Order Submitted Manually per LSR	Attachment: 2 Incremental Charge - Manual Svc Order vs. Electronic-1st	Attachment: 2 Incremental Charge - Manual Svc Order vs. Electronic-Add'l	Exhibit: B Incremental Charge - Manual Svc Order vs. Electronic-Disc 1st	Exhibit: B Incremental Charge - Manual Svc Order vs. Electronic-Disc Add'l
						Rec	Nonrecurring		Nonrecurring Disconnect		OSS Rates($)					
							First	Add'l	First	Add'l	SOMEC	SOMAN	SOMAN	SOMAN	SOMAN	SOMAN
	2-Wire ISDN Digital Grade Loop - UNE Zone 2		2	UEPPB UEPPR	USL2X	24.67						15.75			1.97	
	2-Wire ISDN Digital Grade Loop - UNE Zone 3		3	UEPPB UEPPR	USL2X	34.85						15.75			1.97	
	2-Wire ISDN Digital Grade Loop - UNE Zone 4		4	UEPPB UEPPR	USL2X	57.28						15.75			1.97	
UNE Port Rate																
	Exchange Port - 2-Wire ISDN Line Side Port			UEPPB UEPPR	UEPPB	10.33	190.80	133.22	100.72	21.13		15.75			1.97	
NONRECURRING CHARGES - CURRENTLY COMBINED																
	2-Wire ISDN Digital Grade Loop / 2-Wire ISDN Line Side Port Combination - Conversion			UEPPB UEPPR	USACB	0.00	38.73	27.17				15.75			1.97	
ADDITIONAL NRCs																
LOCAL NUMBER PORTABILITY																
	Local Number Portability (1 per port)			UEPPB UEPPR	LNPCX	0.35	0.00	0.00								
B-CHANNEL USER PROFILE ACCESS:																
	CVS/CSD (DMS/5ESS)			UEPPB UEPPR	U1UCA	0.00	0.00	0.00								
	CVS (EWSD)			UEPPB UEPPR	U1UCB	0.00	0.00	0.00								
	CSD			UEPPB UEPPR	U1UCC	0.00	0.00	0.00								
B-CHANNEL AREA PLUS USER PROFILE ACCESS: (AL,KY,LA,MS SC,MS, & TN)																
	CVS/CSD (DMS/5ESS)			UEPPB UEPPR	U1UCD	0.00	0.00	0.00								
	CVS (EWSD)			UEPPB UEPPR	U1UCE	0.00	0.00	0.00								
	CSD			UEPPB UEPPR	U1UCF	0.00	0.00	0.00								
USER TERMINAL PROFILE																
	User Terminal Profile (EWSD only)			UEPPB UEPPR	U1UMA	0.00	0.00	0.00								
VERTICAL FEATURES																
	All Vertical Features - One per Channel B User Profile			UEPPB UEPPR	UEPVF	2.56	0.00	0.00				15.75			1.97	
INTEROFFICE CHANNEL MILEAGE																
	Interoffice Channel mileage each, including first mile and facilities termination			UEPPB UEPPR	M1GNC	22.5298	40.77	27.57	17.26	7.11		15.75			1.97	
	Interoffice Channel mileage each, additional mile			UEPPB UEPPR	M1GNM	0.0098	0.00	0.00								
4-WIRE DS1 DIGITAL LOOP WITH 4-WIRE ISDN DS1 DIGITAL TRUNK PORT																
UNE Port/Loop Combination Rates																
	4W DS1 Digital Loop/4W ISDN DS1 Digital Trunk Port - UNE Zone 1		1	UEPPP		155.43										
	4W DS1 Digital Loop/4W ISDN DS1 Digital Trunk Port - UNE Zone 2		2	UEPPP		205.74										
	4W DS1 Digital Loop/4W ISDN DS1 Digital Trunk Port - UNE Zone 3		3	UEPPP		283.10										
	4W DS1 Digital Loop/4W ISDN DS1 Digital Trunk Port - UNE Zone 4		4	UEPPP		534.81										
UNE Loop Rates																
	4-Wire DS1 Digital Loop - UNE Zone 1		1	UEPPP	USL4P	79.08						15.75			1.97	
	4-Wire DS1 Digital Loop - UNE Zone 2		2	UEPPP	USL4P	129.38						15.75			1.97	
	4-Wire DS1 Digital Loop - UNE Zone 3		3	UEPPP	USL4P	206.74						15.75			1.97	
	4-Wire DS1 Digital Loop - UNE Zone 4		4	UEPPP	USL4P	458.46						15.75			1.97	
UNE Port Rate																
	Exchange Ports - 4-Wire ISDN DS1 Port			UEPPP	UEPPP	76.35	458.93	260.59	127.75	32.76		15.75			1.97	
NONRECURRING CHARGES - CURRENTLY COMBINED																
	4-Wire DS1 Digital Loop / 4-Wire ISDN DS1 Digital Trunk Port Combination - Conversion -Switch-as-is			UEPPP	USACP	0.00	119.76	79.01				15.75			1.97	
ADDITIONAL NRCs																
	4-Wire DS1 Loop/4-W ISDN Digtl Trk Port - Subsqt Actvy-Inward/two way Tel Nos. (except NC)			UEPPP	PR7TF		0.49					15.75			1.97	
	4-Wire DS1 Loop / 4-Wire ISDN DS1 Digital Trunk Port - Outward Tel Numbers (All States except NC)			UEPPP	PR7TO		11.58	11.58				15.75			1.97	
	4-Wire DS1 Loop / 4-Wire ISDN DS1 Digital Trk Port - Subsequent Inward Tel Numbers			UEPPP	PR7ZT		23.15	23.15				15.75			1.97	
LOCAL NUMBER PORTABILITY																
	Local Number Portability (1 per port)			UEPPP	LNPCN	1.75										
INTERFACE (Provsioning Only)																
	Voice/Data			UEPPP	PR71V	0.00	0.00	0.00								

CATEGORY	RATE ELEMENTS	Interim	Zone	BCS	USOC	RATES ($)					Svc Order Submitted Elec per LSR	Svc Order Submitted Manually per LSR	Attachment: 2 Incremental Charge - Manual Svc Order vs. Electronic-1st	Attachment: 2 Incremental Charge - Manual Svc Order vs. Electronic-Add'l	Exhibit: B Incremental Charge - Manual Svc Order vs. Electronic-Disc 1st	Exhibit: B Incremental Charge - Manual Svc Order vs. Electronic-Disc Add'l
						Rec	Nonrecurring		Nonrecurring Disconnect		OSS Rates($)					
							First	Add'l	First	Add'l	SOMEC	SOMAN	SOMAN	SOMAN	SOMAN	SOMAN
	Digital Data			UEPPP	PR71D	0.00	0.00	0.00								
	Inward Data			UEPPP	PR71E	0.00	0.00	0.00								
New or Additional "B" Channel																
	New or Additional - Voice/Data B Channel			UEPPP	PR7BV	0.00	14.61					15.75			1.97	
	New or Additional - Digital Data B Channel			UEPPP	PR7BF	0.00	14.61					15.75			1.97	
	New or Additional Inward Data B Channel			UEPPP	PR7BD	0.00	14.61					15.75			1.97	
CALL TYPES																
	Inward			UEPPP	PR7C1	0.00	0.00	0.00								
	Outward			UEPPP	PR7CO	0.00	0.00	0.00								
	Two-way			UEPPP	PR7CC	0.00	0.00	0.00								
Interoffice Channel Mileage																
	Fixed Each Including First Mile			UEPPP	1LN1A	57.53	89.79	82.28	16.66	14.90		15.75			1.97	
	Each Airline-Fractional Additional Mile			UEPPP	1LN1B	0.20										
4-WIRE DS1 DIGITAL LOOP WITH 4-WIRE DDITS TRUNK PORT																
UNE Port/Loop Combination Rates																
	4W DS1 Digital Loop/4W DDITS Trunk Port - UNE Zone 1		1	UEPDC		131.78						15.75			1.97	
	4W DS1 Digital Loop/4W DDITS Trunk Port - UNE Zone 2		2	UEPDC		182.07						15.75			1.97	
	4W DS1 Digital Loop/4W DDITS Trunk Port - UNE Zone 3		3	UEPDC		259.44						15.75			1.97	
	4W DS1 Digital Loop/4W DDITS Trunk Port - UNE Zone 4		4	UEPDC		511.15						15.75			1.97	
UNE Loop Rates																
	4-Wire DS1 Digital Loop - UNE Zone 1		1	UEPDC	USLDC	79.08						15.75			1.97	
	4-Wire DS1 Digital Loop - UNE Zone 2		2	UEPDC	USLDC	129.38						15.75			1.97	
	4-Wire DS1 Digital Loop - UNE Zone 3		3	UEPDC	USLDC	206.74						15.75			1.97	
	4-Wire DS1 Digital Loop - UNE Zone 4		4	UEPDC	USLDC	458.46						15.75			1.97	
UNE Port Rate																
	4-Wire DDITS Digital Trunk Port			UEPDC	UDD1T	52.70	457.12	254.70	120.96	14.61		15.75			1.97	
NONRECURRING CHARGES - CURRENTLY COMBINED																
	4-Wire DS1 Digital Loop / 4-Wire DDITS Trunk Port Combination - Switch-as-is			UEPDC	USAC4		130.24	67.41				15.75			1.97	
	4-Wire DS1 Digital Loop / 4-Wire DDITS Trunk Port Combination - Conversion with DS1 Changes			UEPDC	USAWA		130.24	67.41				15.75			1.97	
	4-Wire DS1 Digital Loop / 4-Wire DDITS Trunk Port Combination - Conversion with Change - Trunk			UEPDC	USAWB		130.24	67.41				15.75			1.97	
ADDITIONAL NRCs																
	4-Wire DS1 Loop / 4-Wire DDITS Trunk Port - NRC - Subsequent Channel Activation/Chan - 2-Way Trunk			UEPDC	UDTTA		14.56	14.56				15.75			1.97	
	4-Wire DS1 Loop / 4-Wire DDITS Trunk Port - Subsequent Channel Activation/Chan - 1-Way Outward Trunk			UEPDC	UDTTB		14.56	14.56				15.75			1.97	
	4-Wire DS1 Loop / 4-Wire DDITS Trunk Port - Subsqnt Channel Activation/Chan Inward Trunk w/out DID			UEPDC	UDTTC		14.56	14.56				15.75			1.97	
	4-Wire DS1 Loop / 4-Wire DDITS Trunk Port - Subsqnt Chan Activation Per Chan - Inward Trunk with DID			UEPDC	UDTTD		14.56	14.56				15.75			1.97	
	4-Wire DS1 Loop / 4-Wire DDITS Trunk Port - Subsqnt Chan Activation / Chan - 2-Way DID w User Trans			UEPDC	UDTTE		14.56	14.56				15.75			1.97	
BIPOLAR 8 ZERO SUBSTITUTION																
	B8ZS -Superframe Format			UEPDC	CCOSF		0.00	600.00				15.75			1.97	
	B8ZS - Extended Superframe Format			UEPDC	CCOEF		0.00	600.00				15.75			1.97	
Alternate Mark Inversion																
	AMI -Superframe Format			UEPDC	MCOSF		0.00	0.00								
	AMI - Extended SuperFrame Format			UEPDC	MCOPO		0.00	0.00								
Telephone Number/Trunk Group Establisment Charges																
	Telephone Number for 2-Way Trunk Group			UEPDC	UDTGX	0.00						15.75			1.97	
	Telephone Number for 1-Way Outward Trunk Group			UEPDC	UDTGY	0.00						15.75			1.97	
	Telephone Number for 1-Way Inward Trunk Group Without DID			UEPDC	UDTGZ	0.00						15.75			1.97	
	DID Numbers for each Group of 20 DID Numbers			UEPDC	ND4	0.00						15.75			1.97	
	DID Numbers, Non- consecutive DID Numbers , Per Number			UEPDC	ND5	0.00						15.75			1.97	
	Reserve Non-Consecutive DID Nos.			UEPDC	ND6	0.00	0.00	0.00				15.75			1.97	
	Reserve DID Numbers			UEPDC	NDV	0.00	0.00	0.00				15.75			1.97	
Dedicated DS1 (Interoffice Channel Mileage) - FX/FCO for 4-Wire DS1 Digital Loop with 4-Wire DDITS Trunk Port																

UNBUNDLED NETWORK ELEMENTS - Mississippi

CATEGORY	RATE ELEMENTS	Interim	Zone	BCS	USOC	RATES ($)					Svc Order Submitted Elec per LSR	Svc Order Submitted Manually per LSR	Attachment: 2 Incremental Charge - Manual Svc Order vs. Electronic-1st	Attachment: 2 Incremental Charge - Manual Svc Order vs. Electronic-Add'l	Exhibit: B Incremental Charge - Manual Svc Order vs. Electronic-Disc 1st	Exhibit: B Incremental Charge - Manual Svc Order vs. Electronic-Disc Add'l
						Rec	Nonrecurring		Nonrecurring Disconnect		OSS Rates($)					
							First	Add'l	First	Add'l	SOMEC	SOMAN	SOMAN	SOMAN	SOMAN	SOMAN
	Interoffice Channel Mileage - Fixed rate 0-8 miles (Facilities Termination)			UEPDC	1LNO1	57.33	89.79	82.28	16.86	14.90		15.75			1.97	
	Interoffice Channel Mileage - Additional rate per mile - 0-8 miles			UEPDC	1LNOA	0.20	0.00	0.00								
	Interoffice Channel Mileage - Fixed rate 9-25 miles (Facilities Termination)			UEPDC	1LNO2	0.00	0.00	0.00								
	Interoffice Channel Mileage - Additional rate per mile - 9-25 miles			UEPDC	1LNOB	0.20	0.00	0.00								
	Interoffice Channel Mileage - Fixed rate 25+ miles (Facilities Termination)			UEPDC	1LNO3	0.00	0.00	0.00	0.00							
	Interoffice Channel Mileage - Additional rate per mile - 25+ miles			UEPDC	1LNOC	0.20	0.00	0.00								
	Local Number Portability, per DS0 Activated			UEPDC	LNPCP	3.15	0.00	0.00	0.00							
	Central Office Termininating Point			UEPDC	CTG	0.00										
	4-WIRE DS1 LOOP WITH CHANNELIZATION WITH PORT															
	System is 1 DS1 Loop, 1 D4 Channel Bank, and up to 24 Feature Activations															
	Each System can have up to 24 combinations of rates depending on type and number of ports used															
	UNE DS1 Loop															
	4-Wire DS1 Loop - UNE Zone 1		1	UEPMG	USLDC	79.08	0.00	0.00								
	4-Wire DS1 Loop - UNE Zone 2		2	UEPMG	USLDC	129.38	0.00	0.00								
	4-Wire DS1 Loop - UNE Zone 3		3	UEPMG	USLDC	206.74	0.00	0.00								
	4-Wire DS1 Loop - UNE Zone 4		4	UEPMG	USLDC	458.46	0.00	0.00				15.75			1.97	
	UNE DSO Channelization Capacities (D4 Channel Bank Configurations)															
	24 DSO Channel Capacity - 1 per DS1			UEPMG	VUM24	95.06	0.00	0.00				15.75			1.97	
	48 DSO Channel Capacity - 1 per 2 DS1s			UEPMG	VUM48	190.12	0.00	0.00				15.75			1.97	
	96 DSO Channel Capacity -1per 4 DS1s			UEPMG	VUM96	380.24	0.00	0.00				15.75			1.97	
	144 DS0 Channel Capacity - 1 per 6 DS1s			UEPMG	VUM14	570.36	0.00	0.00				15.75			1.97	
	192 DS0 Channel Capacity -1 per 8 DS1s			UEPMG	VUM19	760.48	0.00	0.00				15.75			1.97	
	240 DS0 Channel Capacity - 1 per 10 DS1s			UEPMG	VUM2O	950.60	0.00	0.00				15.75			1.97	
	288 DS0 Channel Capacity - 1 per 12 DS1s			UEPMG	VUM28	1,140.72	0.00	0.00				15.75			1.97	
	384 DS0 Channel Capacity - 1 per 16 DS1s			UEPMG	VUM38	1,520.96	0.00	0.00				15.75			1.97	
	480 DS0 Channel Capacity - 1 per 20 DS1s			UEPMG	VUM4O	1,901.20	0.00	0.00				15.75			1.97	
	576 DS0 Channel Capacity -1 per 24 DS1s			UEPMG	VUM57	2,281.44	0.00	0.00				15.75			1.97	
	672 DS0 Channel Capacity - 1 per 28 DS1s			UEPMG	VUM67	2,661.68	0.00	0.00				15.75			1.97	
	Non-Recurring Charges (NRC) Associated with 4-Wire DS1 Loop with Channeliztion with Port - Conversion Charge Based on a System															
	A Minimum System configuration is One (1) DS1, One (1) D4 Channel Bank, and Up To 24 DSO Ports with Feature Activations.															
	Multiples of this configuration functioning as one are considered Add'l after the minimum system configuration is counted.															
	NRC - Conversion (Currently Combined) with or without BellSouth Allowed Changes			UEPMG	USAC4	0.00	151.35	8.41				15.75			1.97	
	System Additions at End User Locations Where 4-Wire DS1 Loop with Channelization with Port Combination Currently Exists and															
	New (Not Currently Combined) in all states, except in Density Zone 1 of Top 8 MSA's															
	1 DS1/D4 Channel Bank - Additionally Add NRC for each Port and Assoc Fea Activation			UEPMG	VUMD4	0.00	715.15	327.39	148.05	17.56		15.75			1.97	
	Bipolar 8 Zero Substitution															
	Clear Channel Capability Format, superframe - Subsequent Activity Only			UEPMG	CCOSF	0.00	0.00	600.00				15.75			1.97	
	Clear Channel Capability Format - Extended Superframe - Subsequent Activity Only			UEPMG	CCOEF	0.00	0.00	600.00				15.75			1.97	
	Alternate Mark Inversion (AMI)															
	Superframe Format			UEPMG	MCOSF	0.00	0.00	0.00								
	Extended Superframe Format			UEPMG	MCOPO	0.00	0.00	0.00								
	Exchange Ports Associated with 4-Wire DS1 Loop with Channelization with Port															
	Exchange Ports															
	Line Side Combination Channelized PBX Trunk Port - Business			UEPPX	UEPCX	1.23	0.00	0.00	0.00	0.00		15.75			1.97	
	Line Side Outward Channelized PBX Trunk Port - Business			UEPPX	UEPOX	1.23	0.00	0.00	0.00	0.00		15.75			1.97	
	Line Side Inward Only Channelized PBX Trunk Port without DID			UEPPX	UEP1X	1.23	0.00	0.00	0.00	0.00		15.75			1.97	
	2-Wire Trunk Side Unbundled Channelized DID Trunk Port			UEPPX	UEPDM	7.40	0.00	0.00	0.00	0.00		15.75			1.97	

UNBUNDLED NETWORK ELEMENTS - Mississippi														Attachment: 2		Exhibit: B	
CATEGORY	RATE ELEMENTS	Interim	Zone	BCS	USOC	RATES ($)					Svc Order Submitted Elec per LSR	Svc Order Submitted Manually per LSR	Incremental Charge - Manual Svc Order vs. Electronic-1st	Incremental Charge - Manual Svc Order vs. Electronic-Add'l	Incremental Charge - Manual Svc Order vs. Electronic-Disc 1st	Incremental Charge - Manual Svc Order vs. Electronic-Disc Add'l
						Rec	Nonrecurring		Nonrecurring Disconnect				OSS Rates($)			
							First	Add'l	First	Add'l	SOMEC	SOMAN	SOMAN	SOMAN	SOMAN	SOMAN
	Unbundled Exchange Ports, 2-Wire Channelized – Outdial – (AL, KY, LA, MS, & TN)(Conversion from Network Access Service)			UEPPX	UEPCY	1.23	0.00	0.00	0.00	0.00		15.75			1.97	
	Unbundled Exchange Ports, 2-Wire Channelized – Combination (AL, KY, LA, MS, & TN) (Conversion from Network Access Service)			UEPPX	UEPCT	1.23	0.00	0.00	0.00	0.00		15.75			1.97	
	Unbundled Exchange Ports, 2-Wire Channelized – Outdial– Mississippi Only – Calling Plan			UEPPX	UEPC4	1.23	0.00	0.00	0.00	0.00		15.75			1.97	
Feature Activations - Unbundled Loop Concentration																
	Feature (Service) Activation for each Line Port Terminated in D4 Bank			UEPPX	1PQWM	0.61	25.36	13.39	4.29	4.26		15.75			1.97	
	Feature (Service) Activation for each Trunk Port Terminated in D4 Bank			UEPPX	1PQWU	0.61	78.03	18.39	60.66	11.85		15.75			1.97	
Telephone Number/ Group Establishment Charges for DID Service																
	DID Trunk Termination (1 per Port)			UEPPX	NDT	0.00	0.00	0.00				15.75			1.97	
	DID Numbers - groups of 20 - Valid all States			UEPPX	ND4	0.00	0.00	0.00				15.75			1.97	
	Non-Consecutive DID Numbers - per number			UEPPX	ND5	0.00	0.00	0.00				15.75			1.97	
	Reserve Non-Consecutive DID Numbers			UEPPX	ND6	0.00	0.00	0.00				15.75			1.97	
	Reserve DID Numbers			UEPPX	NDV	0.00	0.00	0.00				15.75			1.97	
Local Number Portability																
	Local Number Portability - 1 per port			UEPPX	LNPCP	3.15	0.00	0.00								
FEATURES - Vertical and Optional																
Local Switching Features Offered with Line Side Ports Only																
	All Features Available			UEPPX	UEPVF	2.56	0.00	0.00				15.75			1.97	
UNBUNDLED CENTREX PORT/LOOP COMBINATIONS - COST BASED RATES																
1. Cost Based Rates are applied where BellSouth is required by FCC and/or State Commission rule to provide Unbundled Local Switching or Switch Ports.																
2. Features shall apply to the Unbundled Port/Loop Combination - Cost Based Rate section in the same manner as they are applied to the Stand-Alone Unbundled Port section of this Rate Exhibit.																
3. End Office and Tandem Switching Usage and Common Transport Usage rates in the Port section of this rate exhibit shall apply to all combinations of loop/port network elements except for UNE Coin Port/Loop Combinations.																
4. The first and additional Port nonrecurring charges apply to Not Currently Combined Combos. For Currently Combined Combos, the nonrecurring charges shall be those identified in the Nonrecurring - Currently Combined sections. Additional NRCs may apply also and are categorized accordingly.																
5. Market Rates for Unbundled Centrex Port/Loop Combination will be negotiated on an Individual Case Basis, until further notice.																
UNE-P CENTREX - 1AESS - (Valid in AL,FL,GA,KY,LA,MS,&TN only)																
2-Wire VG Loop/2-Wire Voice Grade Port (Centrex) Combo																
UNE Port/Loop Combination Rates (Non-Design)																
	2-Wire VG Loop/2-Wire Voice Grade Port (Centrex) Port Combo - Non-Design		1	UEP91		12.22										
	2-Wire VG Loop/2-Wire Voice Grade Port (Centrex)Port Combo - Non-Design		2	UEP91		17.13										
	2-Wire VG Loop/2-Wire Voice Grade Port (Centrex)Port Combo - Non-Design		3	UEP91		26.26										
	2-Wire VG Loop/2-Wire Voice Grade Port (Centrex) Port Combo - Non-Design		4	UEP91		44.91										
UNE Port/Loop Combination Rates (Design)																
	2-Wire VG Loop/2-Wire Voice Grade Port (Centrex) Port Combo - Design		1	UEP91		15.12										
	2-Wire VG Loop/2-Wire Voice Grade Port (Centrex)Port Combo - Design		2	UEP91		19.98										
	2-Wire VG Loop/2-Wire Voice Grade Port (Centrex)Port Combo - Design		3	UEP91		28.78										
	2-Wire VG Loop/2-Wire Voice Grade Port (Centrex) Port Combo - Design		4	UEP91		46.95										
UNE Loop Rate																
	2-Wire Voice Grade Loop (SL 1) - Zone 1		1	UEP91	UECS1	10.98										
	2-Wire Voice Grade Loop (SL 1) - Zone 2		2	UEP91	UECS1	15.91										
	2-Wire Voice Grade Loop (SL 1) - Zone 3		3	UEP91	UECS1	25.04										
	2-Wire Voice Grade Loop (SL 1) - Zone 4		4	UEP91	UECS1	43.68										
	2-Wire Voice Grade Loop (SL 2) - Zone 1		1	UEP91	UECS2	13.89										
	2-Wire Voice Grade Loop (SL 2) - Zone 2		2	UEP91	UECS2	18.75										
	2-Wire Voice Grade Loop (SL 2) - Zone 3		3	UEP91	UECS2	27.55										

UNBUNDLED NETWORK ELEMENTS - Mississippi														Attachment: 2		Exhibit: B	
CATEGORY		RATE ELEMENTS	Interim	Zone	BCS	USOC	RATES ($)					Svc Order Submitted Elec per LSR	Svc Order Submitted Manually per LSR	Incremental Charge - Manual Svc Order vs. Electronic-1st	Incremental Charge - Manual Svc Order vs. Electronic-Add'l	Incremental Charge - Manual Svc Order vs. Electronic-Disc 1st	Incremental Charge - Manual Svc Order vs. Electronic-Disc Add'l
							Rec	Nonrecurring		Nonrecurring Disconnect		OSS Rates($)					
								First	Add'l	First	Add'l	SOMEC	SOMAN	SOMAN	SOMAN	SOMAN	SOMAN
		2-Wire Voice Grade Loop (SL 2) - Zone 4		4	UEP91	UECS2	45.72										
	UNE Ports																
	All States (Except North Carolina and Sout Carolina)																
		2-Wire Voice Grade Port (Centrex) Basic Local Area			UEP91	UEPYA	1.23	40.31	19.84	24.90	6.58		15.75				
		2-Wire Voice Grade Port (Centrex 800 termination)Basic Local Area			UEP91	UEPYB	1.23	40.31	19.84	24.90	6.58		15.75				
		2-Wire Voice Grade Port (Centrex with Caller ID)1Basic Local Area			UEP91	UEPYH	1.23	40.31	19.84	24.90	6.58		15.75				
		2-Wire Voice Grade Port (Centrex from diff Serving Wire Center)2 Basic Local Area			UEP91	UEPYM	1.23	108.35	70.57	54.24	11.70		15.75				
		2-Wire Voice Grade Port, Diff Serving Wire Center - 800 Service Term - Basic Local Area			UEP91	UEPYZ	1.23	108.35	70.57	54.24	11.70		15.75				
		2-Wire Voice Grade Port terminated in on Megalink or equivalent - Basic Local Area			UEP91	UEPY9	1.23	40.31	19.84	24.90	6.58		15.75				
		2-Wire Voice Grade Port Terminated on 800 Service Term - Basic Local Area			UEP91	UEPY2	1.23	40.31	19.84	24.90	6.58		15.75				
	AL, KY, LA, MS, & TN Only																
		2-Wire Voice Grade Port (Centrex)			UEP91	UEPQA	1.23	40.31	19.84	24.90	6.58		15.75				
		2-Wire Voice Grade Port (Centrex 800 termination)			UEP91	UEPQB	1.23	40.31	19.84	24.90	6.58		15.75				
		2-Wire Voice Grade Port (Centrex with Caller ID)1			UEP91	UEPQH	1.23	40.31	19.84	24.90	6.58		15.75				
		2-Wire Voice Grade Port (Centrex from diff Serving Wire Center)2			UEP91	UEPQM	1.23	108.35	70.57	54.24	11.70		15.75				
		2-Wire Voice Grade Port, Diff Serving Wire Center - 800 Service Term			UEP91	UEPQZ	1.23	108.35	70.57	54.24	11.70		15.75				
		2-Wire Voice Grade Port terminated in on Megalink or equivalent			UEP91	UEPQ9	1.23	40.31	19.84	24.90	6.58		15.75				
		2-Wire Voice Grade Port Terminated on 800 Service Term			UEP91	UEPQ2	1.23	40.31	19.84	24.90	6.58		15.75				
	Local Switching																
		Centrex Intercom Funtionality, per port			UEP91	URECS	0.7947										
	Local Number Portability																
		Local Number Portability (1 per port)			UEP91	LNPCC	0.35										
	Features																
		All Standard Features Offered, per port			UEP91	UEPVF	2.56						15.75				
		All Select Features Offered, per port			UEP91	UEPVS	0.00	404.98					15.75				
		All Centrex Control Features Offered, per port			UEP91	UEPVC	2.56						15.75				
	NARS																
		Unbundled Network Access Register - Combination			UEP91	UARCX	0.00	0.00	0.00								
		Unbundled Network Access Register - Indial			UEP91	UAR1X	0.00	0.00	0.00								
		Unbundled Network Access Register - Outdial			UEP91	UAROX	0.00	0.00	0.00								
	Miscellaneous Terminations																
	2-Wire Trunk Side																
		Trunk Side Terminations, each			UEP91	CENA6	8.25	120.00	18.85	61.77	3.88		15.75				
	Interoffice Channel Mileage - 2-Wire																
		Interoffice Channel Facilities Termination - Voice Grade			UEP91	M1GBC	22.52	40.77	27.57	17.26	7.11		15.75				
		Interoffice Channel mileage, per mile or fraction of mile			UEP91	M1GBM	0.0098										
	Feature Activations (DS0) Centrex Loops on Channelized DS1 Service																
	D4 Channel Bank Feature Activations																
		Feature Activation on D-4 Channel Bank Centrex Loop Slot			UEP91	1PQWS	0.57										
		Feature Activation on D-4 Channel Bank FX line Side Loop Slot			UEP91	1PQW6	0.57										
		Feature Activation on D-4 Channel Bank FX Trunk Side Loop Slot			UEP91	1PQW7	0.57										
		Feature Activation on D-4 Channel Bank Centrex Loop Slot - Different Wire Center			UEP91	1PQWP	0.57										
		Feature Activation on D-4 Channel Bank Private Line Loop Slot			UEP91	1PQWV	0.57										
		Feature Activation on D-4 Channel Bank Tjie Line/Trunk Loop Slot			UEP91	1PQWQ	0.57										
		Feature Activation on D-4 Channel Bank WATS Loop Slot			UEP91	1PQWA	0.57										

CATEGORY	RATE ELEMENTS	Interim	Zone	BCS	USOC	RATES ($)					Svc Order Submitted Elec per LSR	Svc Order Submitted Manually per LSR	Attachment: 2 Incremental Charge - Manual Svc Order vs. Electronic-1st	Attachment: 2 Incremental Charge - Manual Svc Order vs. Electronic-Add'l	Exhibit: B Incremental Charge - Manual Svc Order vs. Electronic-Disc 1st	Exhibit: B Incremental Charge - Manual Svc Order vs. Electronic-Disc Add'l
						Rec	Nonrecurring		Nonrecurring Disconnect		OSS Rates($)					
							First	Add'l	First	Add'l	SOMEC	SOMAN	SOMAN	SOMAN	SOMAN	SOMAN
Non-Recurring Charges (NRC) Associated with UNE-P Centrex																
	Conversion - Currently Combined Switch-As-Is with allowed changes, per port			UEP91	USAC2		0.10	0.10				15.75				
	Conversion of Existing Centrex Common Block			UEP91	USACN		37.97	16.68				15.75				
	New Centrex Standard Common Block			UEP91	M1ACS	0.00	666.32					15.75				
	New Centrex Customized Common Block			UEP91	M1ACC	0.00	666.32					15.75				
	Secondary Block, per Block			UEP91	M2CC1	0.00	77.91					15.75				
	NAR Establishment Charge, Per Occasion			UEP91	URECA	0.00	72.63					15.75				
UNE-P CENTREX - 5ESS (Valid in All States)																
2-Wire VG Loop/2-Wire Voice Grade Port (Centrex) Combo																
UNE Port/Loop Combination Rates (Non-Design)																
	2-Wire VG Loop/2-Wire Voice Grade Port (Centrex) Port Combo - Non-Design		1	UEP95		12.22										
	2-Wire VG Loop/2-Wire Voice Grade Port (Centrex)Port Combo - Non-Design		2	UEP95		17.13										
	2-Wire VG Loop/2-Wire Voice Grade Port (Centrex)Port Combo - Non-Design		3	UEP95		26.26										
	2-Wire VG Loop/2-Wire Voice Grade Port (Centrex) Port Combo - Non-Design		4	UEP95		44.91										
UNE Port/Loop Combination Rates (Design)																
	2-Wire VG Loop/2-Wire Voice Grade Port (Centrex) Port Combo - Design		1	UEP95		15.12										
	2-Wire VG Loop/2-Wire Voice Grade Port (Centrex)Port Combo - Design		2	UEP95		19.98										
	2-Wire VG Loop/2-Wire Voice Grade Port (Centrex)Port Combo - Design		3	UEP95		28.78										
	2-Wire VG Loop/2-Wire Voice Grade Port (Centrex) Port Combo - Design		4	UEP95		46.95										
UNE Loop Rate																
	2-Wire Voice Grade Loop (SL 1) - Zone 1		1	UEP95	UECS1	10.98										
	2-Wire Voice Grade Loop (SL 1) - Zone 2		2	UEP95	UECS1	15.91										
	2-Wire Voice Grade Loop (SL 1) - Zone 3		3	UEP95	UECS1	25.04										
	2-Wire Voice Grade Loop (SL 1) - Zone 4		4	UEP95	UECS1	43.68										
	2-Wire Voice Grade Loop (SL 2) - Zone 1		1	UEP95	UECS2	13.89										
	2-Wire Voice Grade Loop (SL 2) - Zone 2		2	UEP95	UECS2	18.75										
	2-Wire Voice Grade Loop (SL 2) - Zone 3		3	UEP95	UECS2	27.55										
	2-Wire Voice Grade Loop (SL 2) - Zone 4		4	UEP95	UECS2	45.72										
UNE Port Rate																
All States																
	2-Wire Voice Grade Port (Centrex) Basic Local Area			UEP95	UEPYA	1.23	40.31	19.84	24.90	6.58		15.75				
	2-Wire Voice Grade Port (Centrex 800 termination)			UEP95	UEPYB	1.23	40.31	19.84	24.90	6.58		15.75				
	2-Wire Voice Grade Port (Centrex with Caller ID)1Basic Local Area			UEP95	UEPYH	1.23	40.31	19.84	24.90	6.58		15.75				
	2-Wire Voice Grade Port (Centrex from diff Serving Wire Center)2 Basic Local Area			UEP95	UEPYM	1.23	108.35	70.57	54.24	11.70		15.75				
	2-Wire Voice Grade Port, Diff Serving Wire Center - 800 Service Term - Basic Local Area			UEP95	UEPYZ	1.23	108.35	70.57	54.24	11.70		15.75				
	2-Wire Voice Grade Port terminated in on Megalink or equivalent - Basic Local Area			UEP95	UEPY9	1.23	40.31	19.84	24.90	6.58		15.75				
	2-Wire Voice Grade Port Terminated on 800 Service Term - Basic Local Area			UEP95	UEPY2	1.23	40.31	19.84	24.90	6.58		15.75				
AL, KY, LA, MS, SC, & TN Only																
	2-Wire Voice Grade Port (Centrex)			UEP95	UEPQA	1.23	40.31	19.84	24.90	6.58		15.75				
	2-Wire Voice Grade Port (Centrex 800 termination)			UEP95	UEPQB	1.23	40.31	19.84	24.90	6.58		15.75				
	2-Wire Voice Grade Port (Centrex with Caller ID)1			UEP95	UEPQH	1.23	40.31	19.84	24.90	6.58		15.75				
	2-Wire Voice Grade Port (Centrex from diff Serving Wire Center)2			UEP95	UEPQM	1.23	108.35	70.57	54.24	11.70		15.75				
	2-Wire Voice Grade Port, Diff Serving Wire Center - 800 Service Term			UEP95	UEPQZ	1.23	108.35	70.57	54.24	11.70		15.75				

CATEGORY	RATE ELEMENTS	Interim	Zone	BCS	USOC	RATES ($)					Svc Order Submitted Elec per LSR	Svc Order Submitted Manually per LSR	Attachment: 2		Exhibit: B	
													Incremental Charge - Manual Svc Order vs. Electronic-1st	Incremental Charge - Manual Svc Order vs. Electronic-Add'l	Incremental Charge - Manual Svc Order vs. Electronic-Disc 1st	Incremental Charge - Manual Svc Order vs. Electronic-Disc Add'l
						Rec	Nonrecurring		Nonrecurring Disconnect				OSS Rates($)			
							First	Add'l	First	Add'l	SOMEC	SOMAN	SOMAN	SOMAN	SOMAN	SOMAN
	2-Wire Voice Grade Port terminated in on Megalink or equivalent			UEP95	UEPQ9	1.23	40.31	19.84	24.90	6.58		15.75				
	2-Wire Voice Grade Port Terminated on 800 Service Term			UEP95	UEPQ2	1.23	40.31	19.84	24.90	6.58		15.75				
FL & GA Only																
Local Switching																
	Centrex Intercom Funtionality, per port			UEP95	URECS	0.7947										
Local Number Portability																
	Local Number Portability (1 per port)			UEP95	LNPCC	0.35										
Features																
	All Standard Features Offered, per port			UEP95	UEPVF	2.56						15.75				
	All Select Features Offered, per port			UEP95	UEPVS	0.00	404.98					15.75				
	All Centrex Control Features Offered, per port			UEP95	UEPVC	2.56						15.75				
NARS																
	Unbundled Network Access Register - Combination			UEP95	UARCX	0.00	0.00	0.00				15.75				
	Unbundled Network Access Register - Indial			UEP95	UAR1X	0.00	0.00	0.00				15.75				
	Unbundled Network Access Register - Outdial			UEP95	UAROX	0.00	0.00	0.00				15.75				
Miscellaneous Terminations																
2-Wire Trunk Side																
	Trunk Side Terminations, each			UEP95	CEND6	8.25	120.00	18.85	61.77	3.88		15.75				
4-Wire Digital (1.544 Megabits)																
	DS1 Circuit Terminations, each			UEP95	M1HD1	58.41	203.19	96.25	74.86	2.54		15.75				
	DS0 Channels Activated, each			UEP95	M1HDO	0.00	14.56									
Interoffice Channel Mileage - 2-Wire																
	Interoffice Channel Facilities Termination			UEP95	M1GBC	22.52	40.77	27.57	17.26	7.11		15.75				
	Interoffice Channel mileage, per mile or fraction of mile			UEP95	M1GBM	0.0098										
Feature Activations (DS0) Centrex Loops on Channelized DS1 Service																
D4 Channel Bank Feature Activations																
	Feature Activation on D-4 Channel Bank Centrex Loop Slot			UEP95	1PQWS	0.57										
	Feature Activation on D-4 Channel Bank FX line Side Loop Slot			UEP95	1PQW6	0.57										
	Feature Activation on D-4 Channel Bank FX Trunk Side Loop Slot			UEP95	1PQW7	0.57										
	Feature Activation on D-4 Channel Bank Centrex Loop Slot - Different Wire Center			UEP95	1PQWP	0.57										
	Feature Activation on D-4 Channel Bank Private Line Loop Slot			UEP95	1PQWV	0.57										
	Feature Activation on D-4 Channel Bank Tjie Line/Trunk Loop Slot			UEP95	1PQWQ	0.57										
	Feature Activation on D-4 Channel Bank WATS Loop Slot			UEP95	1PQWA	0.57										
Non-Recurring Charges (NRC) Associated with UNE-P Centrex																
	NRC Conversion Currently Combined Switch-As-Is with allowed changes, per port			UEP95	USAC2		0.10	0.10				15.75				
	Conversion of Existing Centrex Common Block, each			UEP95	USACN		37.97	16.68				15.75				
	New Centrex Standard Common Block			UEP95	M1ACS	0.00	666.32					15.75				
	New Centrex Customized Common Block			UEP95	M1ACC	0.00	666.32					15.75				
	NAR Establishment Charge, Per Occasion			UEP95	URECA	0.00	72.63					15.75				
UNE-P CENTREX - DMS100 (Valid in All States)																
2-Wire VG Loop/2-Wire Voice Grade Port (Centrex) Combo																
UNE Port/Loop Combination Rates (Non-Design)																
	2-Wire VG Loop/2-Wire Voice Grade Port (Centrex) Port Combo - Non-Design		1	UEP9D		12.22										
	2-Wire VG Loop/2-Wire Voice Grade Port (Centrex)Port Combo - Non-Design		2	UEP9D		17.13										
	2-Wire VG Loop/2-Wire Voice Grade Port (Centrex)Port Combo - Non-Design		3	UEP9D		26.26										
	2-Wire VG Loop/2-Wire Voice Grade Port (Centrex) Port Combo - Non-Design		4	UEP9D		44.91										
UNE Port/Loop Combination Rates (Design)																

CATEGORY		RATE ELEMENTS	Interim	Zone	BCS	USOC	RATES ($)					Svc Order Submitted Elec per LSR	Svc Order Submitted Manually per LSR	Attachment: 2 Incremental Charge - Manual Svc Order vs. Electronic-1st	Attachment: 2 Incremental Charge - Manual Svc Order vs. Electronic-Add'l	Exhibit: B Incremental Charge - Manual Svc Order vs. Electronic-Disc 1st	Exhibit: B Incremental Charge - Manual Svc Order vs. Electronic-Disc Add'l
							Rec	Nonrecurring		Nonrecurring Disconnect		OSS Rates($)					
								First	Add'l	First	Add'l	SOMEC	SOMAN	SOMAN	SOMAN	SOMAN	SOMAN
		2-Wire VG Loop/2-Wire Voice Grade Port (Centrex) Port Combo - Design		1	UEP9D		15.12										
		2-Wire VG Loop/2-Wire Voice Grade Port (Centrex)Port Combo - Design		2	UEP9D		19.98										
		2-Wire VG Loop/2-Wire Voice Grade Port (Centrex)Port Combo - Design		3	UEP9D		28.78										
		2-Wire VG Loop/2-Wire Voice Grade Port (Centrex) Port Combo - Design		4	UEP9D		46.95										
	UNE Loop Rate																
		2-Wire Voice Grade Loop (SL 1) - Zone 1		1	UEP9D	UECS1	10.98										
		2-Wire Voice Grade Loop (SL 1) - Zone 2		2	UEP9D	UECS1	15.91										
		2-Wire Voice Grade Loop (SL 1) - Zone 3		3	UEP9D	UECS1	25.04										
		2-Wire Voice Grade Loop (SL 1) - Zone 4		4	UEP9D	UECS1	43.68										
		2-Wire Voice Grade Loop (SL 2) - Zone 1		1	UEP9D	UECS2	13.89										
		2-Wire Voice Grade Loop (SL 2) - Zone 2		2	UEP9D	UECS2	18.75										
		2-Wire Voice Grade Loop (SL 2) - Zone 3		3	UEP9D	UECS2	27.55										
		2-Wire Voice Grade Loop (SL 2) - Zone 4		4	UEP9D	UECS2	45.72										
	UNE Port Rate																
	ALL STATES																
		2-Wire Voice Grade Port (Centrex) Basic Local Area			UEP9D	UEPYA	1.23	40.31	19.84	24.90	6.58		15.75				
		2-Wire Voice Grade Port (Centrex 800 termination)Basic Local Area			UEP9D	UEPYB	1.23	40.31	19.84	24.90	6.58		15.75				
		2-Wire Voice Grade Port (Centrex / EBS-PSET)3Basic Local Area			UEP9D	UEPYC	1.23	40.31	19.84	24.90	6.58		15.75				
		2-Wire Voice Grade Port (Centrex / EBS-M5009)3Basic Local Area			UEP9D	UEPYD	1.23	40.31	19.84	24.90	6.58		15.75				
		2-Wire Voice Grade Port (Centrex / EBS-M5209))3 Basic Local Area			UEP9D	UEPYE	1.23	40.31	19.84	24.90	6.58		15.75				
		2-Wire Voice Grade Port (Centrex / EBS-M5112))3 Basic Local Area			UEP9D	UEPYF	1.23	40.31	19.84	24.90	6.58		15.75				
		2-Wire Voice Grade Port (Centrex / EBS-M5312))3Basic Local Area			UEP9D	UEPYG	1.23	40.31	19.84	24.90	6.58		15.75				
		2-Wire Voice Grade Port (Centrex / EBS-M5008))3 Basic Local Area			UEP9D	UEPYT	1.23	40.31	19.84	24.90	6.58		15.75				
		2-Wire Voice Grade Port (Centrex / EBS-M5208))3 Basic Local Area			UEP9D	UEPYU	1.23	40.31	19.84	24.90	6.58		15.75				
		2-Wire Voice Grade Port (Centrex / EBS-M5216))3 Basic Local Area			UEP9D	UEPYV	1.23	40.31	19.84	24.90	6.58		15.75				
		2-Wire Voice Grade Port (Centrex / EBS-M5316))3 Basic Local Area			UEP9D	UEPY3	1.23	40.31	19.84	24.90	6.58		15.75				
		2-Wire Voice Grade Port (Centrex with Caller ID) Basic Local Area			UEP9D	UEPYH	1.23	40.31	19.84	24.90	6.58		15.75				
		2-Wire Voice Grade Port (Centrex/Caller ID/Msg Wtg Lamp Indication))3 Basic Local Area			UEP9D	UEPYW	1.23	40.31	19.84	24.90	6.58		15.75				
		2-Wire Voice Grade Port (Centrex/Msg Wtg Lamp Indication))3 Basic Local Area			UEP9D	UEPYJ	1.23	40.31	19.84	24.90	6.58		15.75				
		2-Wire Voice Grade Port (Centrex from diff Serving Wire Center) 2 Basic Local Area			UEP9D	UEPYM	1.23	108.35	70.57	54.24	11.70		15.75				
		2-Wire Voice Grade Port (Centrex/differ SWC /EBS-PSET)2, 3 Basic Local Area			UEP9D	UEPYO	1.23	108.35	70.57	54.24	11.70		15.75				
		2-Wire Voice Grade Port (Centrex/differ SWC /EBS-M5009)2, 3 Basic Local Area			UEP9D	UEPYP	1.23	108.35	70.57	54.24	11.70		15.75				
		2-Wire Voice Grade Port (Centrex/differ SWC /EBS-5209)2, 3 Basic Local Area			UEP9D	UEPYQ	1.23	108.35	70.57	54.24	11.70		15.75				
		2-Wire Voice Grade Port (Centrex/differ SWC /EBS-M5112)2, 3 Basic Local Area			UEP9D	UEPYR	1.23	108.35	70.57	54.24	11.70		15.75				
		2-Wire Voice Grade Port (Centrex/differ SWC /EBS-M5312)2, 3 Basic Local Area			UEP9D	UEPYS	1.23	108.35	70.57	54.24	11.70		15.75				

CATEGORY	RATE ELEMENTS	Interim	Zone	BCS	USOC	RATES ($)					Svc Order Submitted Elec per LSR	Svc Order Submitted Manually per LSR	Attachment: 2		Exhibit: B	
													Incremental Charge - Manual Svc Order vs. Electronic-1st	Incremental Charge - Manual Svc Order vs. Electronic-Add'l	Incremental Charge - Manual Svc Order vs. Electronic-Disc 1st	Incremental Charge - Manual Svc Order vs. Electronic-Disc Add'l
						Rec	Nonrecurring		Nonrecurring Disconnect		OSS Rates($)					
							First	Add'l	First	Add'l	SOMEC	SOMAN	SOMAN	SOMAN	SOMAN	SOMAN
	2-Wire Voice Grade Port (Centrex/differ SWC /EBS-M5008)2, 3 Basic Local Area			UEP9D	UEPY4	1.23	108.35	70.57	54.24	11.70		15.75				
	2-Wire Voice Grade Port (Centrex/differ SWC /EBS-M5208)2, 3 Basic Local Area			UEP9D	UEPY5	1.23	108.35	70.57	54.24	11.70		15.75				
	2-Wire Voice Grade Port (Centrex/differ SWC /EBS-M5216)2, 3 Basic Local Area			UEP9D	UEPY6	1.23	108.35	70.57	54.24	11.70		15.75				
	2-Wire Voice Grade Port (Centrex/differ SWC /EBS-M5316)2, 3 Basic Local Area			UEP9D	UEPY7	1.23	108.35	70.57	54.24	11.70		15.75				
	2-Wire Voice Grade Port, Diff Serving Wire Center - 800 Service Term			UEP9D	UEPYZ	1.23	108.35	70.57	54.24	11.70		15.75				
	2-Wire Voice Grade Port terminated in on Megalink or equivalent Basic Local Area			UEP9D	UEPY9	1.23	40.31	19.84	24.90	6.58		15.75				
	2-Wire Voice Grade Port Terminated on 800 Service Term Basic Local Area			UEP9D	UEPY2	1.23	40.31	19.84	24.90	6.58		15.75				
AL, KY, LA, MS, SC, & TN Only																
	2-Wire Voice Grade Port (Centrex)			UEP9D	UEPQA	1.23	40.31	19.84	24.90	6.58		15.75				
	2-Wire Voice Grade Port (Centrex 800 termination)			UEP9D	UEPQB	1.23	40.31	19.84	24.90	6.58		15.75				
	2-Wire Voice Grade Port (Centrex / EBS-PSET)3			UEP9D	UEPQC	1.23	40.31	19.84	24.90	6.58		15.75				
	2-Wire Voice Grade Port (Centrex / EBS-M5009)3			UEP9D	UEPQD	1.23	40.31	19.84	24.90	6.58		15.75				
	2-Wire Voice Grade Port (Centrex / EBS-M5209)3			UEP9D	UEPQE	1.23	40.31	19.84	24.90	6.58		15.75				
	2-Wire Voice Grade Port (Centrex / EBS-M5112)3			UEP9D	UEPQF	1.23	40.31	19.84	24.90	6.58		15.75				
	2-Wire Voice Grade Port (Centrex / EBS-M5312)3			UEP9D	UEPQG	1.23	40.31	19.84	24.90	6.58		15.75				
	2-Wire Voice Grade Port (Centrex / EBS-M5008)3			UEP9D	UEPQT	1.23	40.31	19.84	24.90	6.58		15.75				
	2-Wire Voice Grade Port (Centrex / EBS-M5208)3			UEP9D	UEPQU	1.23	40.31	19.84	24.90	6.58		15.75				
	2-Wire Voice Grade Port (Centrex / EBS-M5216)3			UEP9D	UEPQV	1.23	40.31	19.84	24.90	6.58		15.75				
	2-Wire Voice Grade Port (Centrex / EBS-M5316)3			UEP9D	UEPQ3	1.23	40.31	19.84	24.90	6.58		15.75				
	2-Wire Voice Grade Port (Centrex with Caller ID)			UEP9D	UEPQH	1.23	40.31	19.84	24.90	6.58		15.75				
	2-Wire Voice Grade Port (Centrex/Caller ID/Msg Wtg Lamp Indication)3			UEP9D	UEPQW	1.23	40.31	19.84	24.90	6.58		15.75				
	2-Wire Voice Grade Port (Centrex/Msg Wtg Lamp Indication)3			UEP9D	UEPQJ	1.23	40.31	19.84	24.90	6.58		15.75				
	2-Wire Voice Grade Port (Centrex from diff Serving Wire Center) 2			UEP9D	UEPQM	1.23	108.35	70.57	54.24	11.70		15.75				
	2-Wire Voice Grade Port (Centrex/differ SWC /EBS-PSET)2, 3			UEP9D	UEPQO	1.23	108.35	70.57	54.24	11.70		15.75				
	2-Wire Voice Grade Port (Centrex/differ SWC /EBS-M5009)2, 3			UEP9D	UEPQP	1.23	108.35	70.57	54.24	11.70		15.75				
	2-Wire Voice Grade Port (Centrex/differ SWC /EBS-5209)2, 3			UEP9D	UEPQQ	1.23	108.35	70.57	54.24	11.70		15.75				
	2-Wire Voice Grade Port (Centrex/differ SWC /EBS-M5112)2, 3			UEP9D	UEPQR	1.23	108.35	70.57	54.24	11.70		15.75				
	2-Wire Voice Grade Port (Centrex/differ SWC /EBS-M5312)2, 3			UEP9D	UEPQS	1.23	108.35	70.57	54.24	11.70		15.75				
	2-Wire Voice Grade Port (Centrex/differ SWC /EBS-M5008)2, 3			UEP9D	UEPQ4	1.23	108.35	70.57	54.24	11.70		15.75				
	2-Wire Voice Grade Port (Centrex/differ SWC /EBS-M5208)2, 3			UEP9D	UEPQ5	1.23	108.35	70.57	54.24	11.70		15.75				
	2-Wire Voice Grade Port (Centrex/differ SWC /EBS-M5216)2, 3			UEP9D	UEPQ6	1.23	108.35	70.57	54.24	11.70		15.75				
	2-Wire Voice Grade Port (Centrex/differ SWC /EBS-M5316)2, 3			UEP9D	UEPQ7	1.23	108.35	70.57	54.24	11.70		15.75				
	2-Wire Voice Grade Port, Diff Serving Wire Center - 800 Service Term			UEP9D	UEPQZ	1.23	108.35	70.57	54.24	11.70		15.75				
	2-Wire Voice Grade Port terminated in on Megalink or equivalent			UEP9D	UEPQ9	1.23	40.31	19.84	24.90	6.58		15.75				
	2-Wire Voice Grade Port Terminated on 800 Service Term			UEP9D	UEPQ2	1.23	40.31	19.84	24.90	6.58		15.75				
Local Switching																
	Centrex Intercom Funtionality, per port			UEP9D	URECS	0.7947										
Local Number Portability																
	Local Number Portability (1 per port)			UEP9D	LNPCC	0.35										
Features																
	All Standard Features Offered, per port			UEP9D	UEPVF	2.56						15.75				

UNBUNDLED NETWORK ELEMENTS - Mississippi														Attachment: 2		Exhibit: B	
CATEGORY		RATE ELEMENTS	Interim	Zone	BCS	USOC	RATES ($)					Svc Order Submitted Elec per LSR	Svc Order Submitted Manually per LSR	Incremental Charge - Manual Svc Order vs. Electronic-1st	Incremental Charge - Manual Svc Order vs. Electronic-Add'l	Incremental Charge - Manual Svc Order vs. Electronic-Disc 1st	Incremental Charge - Manual Svc Order vs. Electronic-Disc Add'l
							Rec	Nonrecurring		Nonrecurring Disconnect		OSS Rates($)					
								First	Add'l	First	Add'l	SOMEC	SOMAN	SOMAN	SOMAN	SOMAN	SOMAN
		All Select Features Offered, per port			UEP9D	UEPVS	0.00	404.98					15.75				
		All Centrex Control Features Offered, per port			UEP9D	UEPVC	2.56						15.75				
	NARS																
		Unbundled Network Access Register - Combination			UEP9D	UARCX	0.00	0.00	0.00				15.75				
		Unbundled Network Access Register - Inward			UEP9D	UAR1X	0.00	0.00	0.00				15.75				
		Unbundled Network Access Register - Outdial			UEP9D	UAROX	0.00	0.00	0.00				15.75				
	Miscellaneous Terminations																
	2-Wire Trunk Side																
		Trunk Side Terminations, each			UEP9D	CEND6	8.25	120.00	18.85	61.77	3.88		15.75				
	4-Wire Digital (1.544 Megabits)																
		DS1 Circuit Terminations, each			UEP9D	M1HD1	58.41	203.19	96.25	74.86	2.54		15.75				
		DS0 Channels Activiated per Channel			UEP9D	M1HDO	0.00	14.56									
	Interoffice Channel Mileage - 2-Wire																
		Interoffice Channel Facilities Termination			UEP9D	M1GBC	22.52	40.77	27.57	17.26	7.11		15.75				
		Interoffice Channel mileage, per mile or fraction of mile			UEP9D	M1GBM	0.0098										
	Feature Activations (DS0) Centrex Loops on Channelized DS1 Service																
	D4 Channel Bank Feature Activations																
		Feature Activation on D-4 Channel Bank Centrex Loop Slot			UEP9D	1PQWS	0.57										
		Feature Activation on D-4 Channel Bank FX line Side Loop Slot			UEP9D	1PQW6	0.57										
		Feature Activation on D-4 Channel Bank FX Trunk Side Loop Slot			UEP9D	1PQW7	0.57										
		Feature Activation on D-4 Channel Bank Centrex Loop Slot - Different Wire Center			UEP9D	1PQWP	0.57										
		Feature Activation on D-4 Channel Bank Private Line Loop Slot			UEP9D	1PQWV	0.57										
		Feature Activation on D-4 Channel Bank Tjie Line/Trunk Loop Slot			UEP9D	1PQWQ	0.57										
		Feature Activation on D-4 Channel Bank WATS Loop Slot			UEP9D	1PQWA	0.57										
	Non-Recurring Charges (NRC) Associated with UNE-P Centrex																
		NRC Conversion Currently Combined Switch-As-Is with allowed changes, per port			UEP9D	USAC2		0.10	0.10				15.75				
		Conversion of existing Centrex Common Block, each			UEP9D	USACN		37.97	16.68				15.75				
		New Centrex Standard Common Block			UEP9D	M1ACS	0.00	666.32					15.75				
		New Centrex Customized Common Block			UEP9D	M1ACC	0.00	666.32					15.75				
		NAR Establishment Charge, Per Occasion			UEP9D	URECA	0.00	72.63					15.75				
	UNE-P CENTREX - EWSD (Valid in AL, FL, KY, LA, MS & TN)																
	2-Wire VG Loop/2-Wire Voice Grade Port (Centrex) Combo																
	UNE Port/Loop Combination Rates (Non-Design)																
		2-Wire VG Loop/2-Wire Voice Grade Port (Centrex) Port Combo - Non-Design		1	UEP9E		12.22										
		2-Wire VG Loop/2-Wire Voice Grade Port (Centrex)Port Combo - Non-Design		2	UEP9E		17.13										
		2-Wire VG Loop/2-Wire Voice Grade Port (Centrex)Port Combo - Non-Design		3	UEP9E		26.26										
		2-Wire VG Loop/2-Wire Voice Grade Port (Centrex) Port Combo - Non-Design		4	UEP9E		44.91										
	UNE Port/Loop Combination Rates (Design)																
		2-Wire VG Loop/2-Wire Voice Grade Port (Centrex) Port Combo - Design		1	UEP9E		15.12										
		2-Wire VG Loop/2-Wire Voice Grade Port (Centrex)Port Combo - Design		2	UEP9E		19.98										
		2-Wire VG Loop/2-Wire Voice Grade Port (Centrex)Port Combo - Design		3	UEP9E		28.78										
		2-Wire VG Loop/2-Wire Voice Grade Port (Centrex) Port Combo - Design		4	UEP9E		46.95										
	UNE Loop Rate																
		2-Wire Voice Grade Loop (SL 1) - Zone 1		1	UEP9E	UECS1	10.98										
		2-Wire Voice Grade Loop (SL 1) - Zone 2		2	UEP9E	UECS1	15.91										

UNBUNDLED NETWORK ELEMENTS - Mississippi														Attachment: 2		Exhibit: B	
CATEGORY		RATE ELEMENTS	Interim	Zone	BCS	USOC	RATES ($)					Svc Order Submitted Elec per LSR	Svc Order Submitted Manually per LSR	Incremental Charge - Manual Svc Order vs. Electronic-1st	Incremental Charge - Manual Svc Order vs. Electronic-Add'l	Incremental Charge - Manual Svc Order vs. Electronic-Disc 1st	Incremental Charge - Manual Svc Order vs. Electronic-Disc Add'l
							Rec	Nonrecurring		Nonrecurring Disconnect		OSS Rates($)					
								First	Add'l	First	Add'l	SOMEC	SOMAN	SOMAN	SOMAN	SOMAN	SOMAN
		2-Wire Voice Grade Loop (SL 1) - Zone 3		3	UEP9E	UECS1	25.04										
		2-Wire Voice Grade Loop (SL 1) - Zone 4		4	UEP9E	UECS1	43.68										
		2-Wire Voice Grade Loop (SL 2) - Zone 1		1	UEP9E	UECS2	13.89										
		2-Wire Voice Grade Loop (SL 2) - Zone 2		2	UEP9E	UECS2	18.75										
		2-Wire Voice Grade Loop (SL 2) - Zone 3		3	UEP9E	UECS2	27.55										
		2-Wire Voice Grade Loop (SL 2) - Zone 4		4	UEP9E	UECS2	45.72										
	UNE Port Rate																
	AL, FL, KY, LA, MS, & TN only																
		2-Wire Voice Grade Port (Centrex) Basic Local Area			UEP9E	UEPYA	1.23	40.31	19.84	24.90	6.58		15.75				
		2-Wire Voice Grade Port (Centrex 800 termination)Basic Local Area			UEP9E	UEPYB	1.23	40.31	19.84	24.90	6.58		15.75				
		2-Wire Voice Grade Port (Centrex with Caller ID)1Basic Local Area			UEP9E	UEPYH	1.23	40.31	19.84	24.90	6.58		15.75				
		2-Wire Voice Grade Port (Centrex from diff Serving Wire Center)2 Basic Local Area			UEP9E	UEPYM	1.23	108.35	70.57	54.24	11.70		15.75				
		2-Wire Voice Grade Port, Diff Serving Wire Center - 800 Service Term - Basic Local Area			UEP9E	UEPYZ	1.23	108.35	70.57	54.24	11.70		15.75				
		2-Wire Voice Grade Port terminated in on Megalink or equivalent - Basic Local Area			UEP9E	UEPY9	1.23	40.31	19.84	24.90	6.58		15.75				
		2-Wire Voice Grade Port Terminated on 800 Service Term - Basic Local Area			UEP9E	UEPY2	1.23	40.31	19.84	24.90	6.58		15.75				
	AL, KY, LA, MS, & TN Only																
		2-Wire Voice Grade Port (Centrex)			UEP9E	UEPQA	1.23	40.31	19.84	24.90	6.58		15.75				
		2-Wire Voice Grade Port (Centrex 800 termination)			UEP9E	UEPQB	1.23	40.31	19.84	24.90	6.58		15.75				
		2-Wire Voice Grade Port (Centrex with Caller ID)1			UEP9E	UEPQH	1.23	40.31	19.84	24.90	6.58		15.75				
		2-Wire Voice Grade Port (Centrex from diff Serving Wire Center)2			UEP9E	UEPQM	1.23	108.35	70.57	54.24	11.70		15.75				
		2-Wire Voice Grade Port, Diff Serving Wire Center - 800 Service Term			UEP9E	UEPQZ	1.23	108.35	70.57	54.24	11.70		15.75				
		2-Wire Voice Grade Port terminated in on Megalink or equivalent			UEP9E	UEPQ9	1.23	40.31	19.84	24.90	6.58		15.75				
		2-Wire Voice Grade Port Terminated on 800 Service Term			UEP9E	UEPQ2	1.23	40.31	19.84	24.90	6.58		15.75				
	Local Switching																
		Centrex Intercom Funtionality, per port			UEP9E	URECS	0.7947										
	Local Number Portability																
		Local Number Portability (1 per port)			UEP9E	LNPCC	0.35										
	Features																
		All Standard Features Offered, per port			UEP9E	UEPVF	2.56						15.75				
		All Select Features Offered, per port			UEP9E	UEPVS	0.00	404.98					15.75				
		All Centrex Control Features Offered, per port			UEP9E	UEPVC	2.56						15.75				
	NARS																
		Unbundled Network Access Register - Combination			UEP9E	UARCX	0.00	0.00	0.00				15.75				
		Unbundled Network Access Register - Indial			UEP9E	UAR1X	0.00	0.00	0.00				15.75				
		Unbundled Network Access Register - Outdial			UEP9E	UAROX	0.00	0.00	0.00				15.75				
	Miscellaneous Terminations																
	2-Wire Trunk Side																
		Trunk Side Terminations, each			UEP9E	CEND6	8.25	120.00	18.85	61.77	3.88		15.75				
	4-Wire Digital (1.544 Megabits)																
		DS1 Circuit Terminations, each			UEP9E	M1HD1	58.41	203.19	96.25	74.86	2.54		15.75				
		DS0 Channel Activated Per Channel			UEP9E	M1HDO	0.00	14.56					15.75				
	Interoffice Channel Mileage - 2-Wire																
		Interoffice Channel Facilities Termination			UEP9E	M1GBC	22.52	40.77	27.57	17.26	7.11		15.75				
		Interoffice Channel mileage, per mile or fraction of mile			UEP9E	M1GBM	0.0098										
	Feature Activations (DS0) Centrex Loops on Channelized DS1 Service																
	D4 Channel Bank Feature Activations																
		Feature Activation on D-4 Channel Bank Centrex Loop Slot			UEP9E	1PQWS	0.57						15.75				
		Feature Activation on D-4 Channel Bank FX line Side Loop Slot			UEP9E	1PQW6	0.57						15.75				

UNBUNDLED NETWORK ELEMENTS - Mississippi														Attachment: 2		Exhibit: B	
CATEGORY		RATE ELEMENTS	Interim	Zone	BCS	USOC	RATES ($)					Svc Order Submitted Elec per LSR	Svc Order Submitted Manually per LSR	Incremental Charge - Manual Svc Order vs. Electronic-1st	Incremental Charge - Manual Svc Order vs. Electronic-Add'l	Incremental Charge - Manual Svc Order vs. Electronic-Disc 1st	Incremental Charge - Manual Svc Order vs. Electronic-Disc Add'l
							Rec	Nonrecurring		Nonrecurring Disconnect		OSS Rates($)					
								First	Add'l	First	Add'l	SOMEC	SOMAN	SOMAN	SOMAN	SOMAN	SOMAN
		Feature Activation on D-4 Channel Bank FX Trunk Side Loop Slot			UEP9E	1PQW7	0.57						15.75				
		Feature Activation on D-4 Channel Bank Centrex Loop Slot - Different Wire Center			UEP9E	1PQWP	0.57						15.75				
		Feature Activation on D-4 Channel Bank Private Line Loop Slot			UEP9E	1PQWV	0.57						15.75				
		Feature Activation on D-4 Channel Bank Tjie Line/Trunk Loop Slot			UEP9E	1PQWQ	0.57						15.75				
		Feature Activation on D-4 Channel Bank WATS Loop Slot			UEP9E	1PQWA	0.57						15.75				
	Non-Recurring Charges (NRC) Associated with UNE-P Centrex																
		NRC Conversion Currently Combined Switch-As-Is with allowed changes, per port			UEP9E	USAC2		0.10	0.10				15.75				
		Conversion of Existing Centrex Common Block, each			UEP9E	USACN		37.97	16.68				15.75				
		New Centrex Standard Common Block			UEP9E	M1ACS	0.00	666.32					15.75				
		New Centrex Customized Common Block			UEP9E	M1ACC	0.00	666.32					15.75				
		NAR Establishment Charge, Per Occasion			UEP9E	URECA	0.00	72.63					15.75				
	UNE-P CENTREX - DCO - Valid in AL, KY, LA, MS, & TN)																
	2-Wire VG Loop/2-Wire Voice Grade Port (Centrex) Combo																
	UNE Port/Loop Combination Rates (Non-Design)																
		2-Wire VG Loop/2-Wire Voice Grade Port (Centrex) Port Combo - Non-Design		1	UEP93		12.22										
		2-Wire VG Loop/2-Wire Voice Grade Port (Centrex)Port Combo - Non-Design		2	UEP93		17.13										
		2-Wire VG Loop/2-Wire Voice Grade Port (Centrex)Port Combo - Non-Design		3	UEP93		26.26										
		2-Wire VG Loop/2-Wire Voice Grade Port (Centrex) Port Combo - Non-Design		4	UEP93		44.91										
	UNE Port/Loop Combination Rates (Design)																
		2-Wire VG Loop/2-Wire Voice Grade Port (Centrex) Port Combo - Design		1	UEP93		15.12										
		2-Wire VG Loop/2-Wire Voice Grade Port (Centrex)Port Combo - Design		2	UEP93		19.98										
		2-Wire VG Loop/2-Wire Voice Grade Port (Centrex)Port Combo - Design		3	UEP93		28.78										
		2-Wire VG Loop/2-Wire Voice Grade Port (Centrex) Port Combo - Design		4	UEP93		46.95										
	UNE Loop Rate																
		2-Wire Voice Grade Loop (SL 1) - Zone 1		1	UEP93	UECS1	10.98										
		2-Wire Voice Grade Loop (SL 1) - Zone 2		2	UEP93	UECS1	15.91										
		2-Wire Voice Grade Loop (SL 1) - Zone 3		3	UEP93	UECS1	25.04										
		2-Wire Voice Grade Loop (SL 1) - Zone 4		4	UEP93	UECS1	43.68										
		2-Wire Voice Grade Loop (SL 2) - Zone 1		1	UEP93	UECS2	13.89										
		2-Wire Voice Grade Loop (SL 2) - Zone 2		2	UEP93	UECS2	18.75										
		2-Wire Voice Grade Loop (SL 2) - Zone 3		3	UEP93	UECS2	27.55										
		2-Wire Voice Grade Loop (SL 2) - Zone 4		4	UEP93	UECS2	45.72										
	UNE Port Rate																
	AL, KY, LA, MS, & TN only																
		2-Wire Voice Grade Port (Centrex) Basic Local Area			UEP93	UEPYA	1.23	40.31	19.84	24.90	6.58		15.75				
		2-Wire Voice Grade Port (Centrex 800 termination)Basic Local Area			UEP93	UEPYB	1.23	40.31	19.84	24.90	6.58		15.75				
		2-Wire Voice Grade Port (Centrex with Caller ID)1Basic Local Area			UEP93	UEPYH	1.23	40.31	19.84	24.90	6.58		15.75				
		2-Wire Voice Grade Port (Centrex from diff Serving Wire Center)2 Basic Local Area			UEP93	UEPYM	1.23	108.35	70.57	54.24	11.70		15.75				
		2-Wire Voice Grade Port, Diff Serving Wire Center - 800 Service Term - Basic Local Area			UEP93	UEPYZ	1.23	108.35	70.57	54.24	11.70		15.75				
		2-Wire Voice Grade Port terminated in on Megalink or equivalent - Basic Local Area			UEP93	UEPY9	1.23	40.31	19.84	24.90	6.58		15.75				

UNBUNDLED NETWORK ELEMENTS - Mississippi

CATEGORY	RATE ELEMENTS	Interim	Zone	BCS	USOC	RATES ($)					Svc Order Submitted Elec per LSR	Svc Order Submitted Manually per LSR	Attachment: 2		Exhibit: B	
													Incremental Charge - Manual Svc Order vs. Electronic-1st	Incremental Charge - Manual Svc Order vs. Electronic-Add'l	Incremental Charge - Manual Svc Order vs. Electronic-Disc 1st	Incremental Charge - Manual Svc Order vs. Electronic-Disc Add'l
						Rec	Nonrecurring		Nonrecurring Disconnect		OSS Rates($)					
							First	Add'l	First	Add'l	SOMEC	SOMAN	SOMAN	SOMAN	SOMAN	SOMAN
	2-Wire Voice Grade Port Terminated on 800 Service Term - Basic Local Area			UEP93	UEPY2	1.23	40.31	19.84	24.90	6.58		15.75				
	2-Wire Voice Grade Port (Centrex)			UEP93	UEPQA	1.23	40.31	19.84	24.90	6.58		15.75				
	2-Wire Voice Grade Port (Centrex 800 termination)			UEP93	UEPQB	1.23	40.31	19.84	24.90	6.58		15.75				
	2-Wire Voice Grade Port (Centrex with Caller ID)1			UEP93	UEPQH	1.23	40.31	19.84	24.90	6.58		15.75				
	2-Wire Voice Grade Port (Centrex from diff Serving Wire Center)2			UEP93	UEPQM	1.23	108.35	70.57	54.24	11.70		15.75				
	2-Wire Voice Grade Port, Diff Serving Wire Center - 800 Service Term			UEP93	UEPQZ	1.23	108.35	70.57	54.24	11.70		15.75				
	2-Wire Voice Grade Port terminated in on Megalink or equivalent			UEP93	UEPQ9	1.23	40.31	19.84	24.90	6.58		15.75				
	2-Wire Voice Grade Port Terminated on 800 Service Term			UEP93	UEPQ2	1.23	40.31	19.84	24.90	6.58		15.75				
Local Switching																
	Centrex Intercom Funtionality, per port			UEP93	URECS	0.7947										
Local Number Portability																
	Local Number Portability (1 per port)			UEP93	LNPCC	0.35										
Features																
	All Standard Features Offered, per port			UEP93	UEPVF	2.56						15.75				
	All Centrex Control Features Offered, per port			UEP93	UEPVC	2.56						15.75				
NARS																
	Unbundled Network Access Register - Combination			UEP93	UARCX	0.00	0.00	0.00				15.75				
	Unbundled Network Access Register - Indial			UEP93	UAR1X	0.00	0.00	0.00				15.75				
	Unbundled Network Access Register - Outdial			UEP93	UAROX	0.00	0.00	0.00				15.75				
Miscellaneous Terminations																
2-Wire Trunk Side																
	Trunk Side Terminations, each			UEP93	CEND6	8.25	120.00	18.85	61.77	3.88		15.75				
4-Wire Digital (1.544 Megabits)																
	DS1 Circuit Terminations, each			UEP93	M1HD1	58.41	203.19	96.25	74.86	2.54		15.75				
	DS0 Channels Activated, Per Channel			UEP93	M1HDO	0.00	14.56					15.75				
Interoffice Channel Mileage - 2-Wire																
	Interoffice Channel Facilities Termination			UEP93	M1GBC	22.52	40.77	27.57	17.26	7.11		15.75				
	Interoffice Channel mileage, per mile or fraction of mile			UEP93	M1GBM	0.0098										
Feature Activations (DS0) Centrex Loops on Channelized DS1 Service																
D4 Channel Bank Feature Activations																
	Feature Activation on D-4 Channel Bank Centrex Loop Slot			UEP93	1PQWS	0.57										
	Feature Activation on D-4 Channel Bank FX Line Side Loop Slot			UEP93	1PQW6	0.57										
	Feature Activation on D-4 Channel Bank FX Trunk Side Loop Slot			UEP93	1PQW7	0.57										
	Feature Activation on D-4 Channel Bank Centrex Loop Slot - Different Wire Center			UEP93	1PQWP	0.57										
	Feature Activation on D-4 Channel Bank Private Line Loop Slot			UEP93	1PQWV	0.57										
	Feature Activation on D-4 Channel Bank Tie Line/Trunk Loop Slot			UEP93	1PQWQ	0.57										
	Feature Activation on D-4 Channel Bank WATS Loop Slot			UEP93	1PQWA	0.57										
Non-Recurring Charges (NRC) Associated with UNE-P Centrex																
	NRC Conversion Currently Combined Switch-As-Is with allowed changes, per port			UEP93	USAC2		0.10	0.10				15.75				
	Conversion of Existing Centrex Common Block, each			UEP93	USACN		37.97	16.68								
	New Centrex Standard Common Block			UEP93	M1ACS	0.00	666.32					15.75				
	New Centrex Customized Common Block			UEP93	M1ACC	0.00	666.32					15.75				
	NAR Establishment Charge, Per Occasion			UEP93	URECA	0.00	72.63					15.75				
Note 1 - Required Port for Centrex Control in 1AESS, 5ESS & EWSD																
Note 2 - Requres Interoffice Channel Mileage																
Note 3 - Requires Specific Customer Premises Equipment																
Note: Rates displaying an "R" in Interim column are interim and subject to rate true-up as set forth in General Terms and Conditions.																

UNBUNDLED NETWORK ELEMENTS - North Carolina													Attachment: 2		Exhibit: B	
CATEGORY	RATE ELEMENTS	Interim	Zone	BCS	USOC	RATES ($)					Svc Order Submitted Elec per LSR	Svc Order Submitted Manually per LSR	Incremental Charge - Manual Svc Order vs. Electronic-1st	Incremental Charge - Manual Svc Order vs. Electronic-Add'l	Incremental Charge - Manual Svc Order vs. Electronic-Disc 1st	Incremental Charge - Manual Svc Order vs. Electronic-Disc Add'l
						Rec	Nonrecurring		Nonrecurring Disconnect		OSS Rates($)					
							First	Add'l	First	Add'l	SOMEC	SOMAN	SOMAN	SOMAN	SOMAN	SOMAN
	The "Zone" shown in the sections for stand-alone loops or loops as part of a combination refers to Geographically Deaveraged UNE Zones. To view Geographically Deaveraged UNE Zone Designations by Central Office, refer to internet Website: http://www.interconnection.bellsouth.com/become_a_clec/html/interconnection.htm															
OPERATIONAL SUPPORT SYSTEMS																
	NOTE: (1) Electronic Service Order: CLEC should contact its contract negotiator if it prefers the state specific electronic service ordering charges as ordered by the State Commissions. The electronic service ordering charge currently contained in this rate exhibit is the BellSouth regional electronic service ordering charge. CLEC may elect either the state specific Commission ordered rates for the electronic service ordering charges, or CLEC may elect the regional electronic service ordering charge.															
	NOTE: (2) Any element that can be ordered electronically will be billed according to the SOMEC rate listed in this category. Please refer to BellSouth's Business Rules for Local Ordering (BBR-LO) to determine if a product can be ordered electronically. For those elements that cannot be ordered electronically at present per the BBR-LO, the listed SOMEC rate in this category reflects the charge that would be billed to a CLEC once electronic ordering capabilities come on-line for that element. Otherwise, the manual ordering charge, SOMAN, will be applied to a CLECs bill when it submits an LSR to BellSouth.															
	Electronic OSS Charge, per LSR, submitted via BST's OSS interactive interfaces (Regional)				SOMEC		3.50									
UNE SERVICE DATE ADVANCEMENT CHARGE																
	NOTE: The Expedite charge will be maintained commensurate with BellSouth's FCC No.1 Tariff, Section 5 as applicable.															
	UNE Expedite Charge per Circuit or Line Assignable USOC, per Day			UAL, UEANL, UCL, UEF, UDF, UEQ, UDL, UENTW, UDN, UEA, UHL, ULC, USL, U1T12, U1T48, U1TD1, U1TD3, U1TDX, U1TO3, U1TS1, U1TVX, UC1BC, UC1BL, UC1CC, UC1CL, UC1DC, UC1DL, UC1EC, UC1EL, UC1FC, UC1FL, UC1GC, UC1GL, UC1HC, UC1HL, UDL12, UDL48, UDLO3, UDLSX, UE3, ULD12, ULD48, ULDD1, ULDD3, ULDDX, ULDO3, ULDS1, ULDVX, UNC1X, UNC3X, UNCDX, UNCNX, UNCSX, UNCVX, UNLD1, UNLD3, UXTD1, UXTD3, UXTS1, U1TUC, U1TUD, U1TUB, U1TUA	SDASP		200.00									
UNBUNDLED EXCHANGE ACCESS LOOP																
	2-WIRE ANALOG VOICE GRADE LOOP															
	2-Wire Analog Voice Grade Loop - Service Level 1- Zone 1		1	UEANL	UEAL2	12.11	57.99	42.37					26.94	12.76	0.00	0.00
	2-Wire Analog Voice Grade Loop - Service Level 1- Zone 2		2	UEANL	UEAL2	21.24	57.99	42.37					26.94	12.76	0.00	0.00
	2-Wire Analog Voice Grade Loop - Service Level 1- Zone 3		3	UEANL	UEAL2	33.65	57.99	42.37					26.94	12.76	0.00	0.00
	Unbundled Miscellaneous Rate Element, Tag Loop at End User Premise			UEANL	URETL		8.33	0.83					26.94	12.76	0.00	0.00
	Loop Testing - Basic 1st Half Hour			UEANL	URET1		76.24						26.94	12.76	0.00	0.00
	Loop Testing - Basic Additional Half Hour			UEANL	URETA		39.51						26.94	12.76	0.00	0.00
	CLEC to CLEC Conversion Charge Without Outside Dispatch (UVL-SL1)			UEANL	UREWO		15.76	8.93					26.94	12.76	0.00	0.00
	Unbundled Voice Loop, Non-Design Voice Loop, billing for BST providing make-up (Engineering Information - E.I.)			UEANL	UEANM		28.74	28.74								
	Manual Order Coordination for UVL-SL1s (per loop)			UEANL	UEAMC		61.38	61.38								
	Order Coordination for Specified Conversion Time for UVL-SL1 (per LSR)			UEANL	OCOSL		45.34									

UNBUNDLED NETWORK ELEMENTS - North Carolina													Attachment: 2		Exhibit: B	
CATEGORY	RATE ELEMENTS	Interim	Zone	BCS	USOC	RATES ($)					Svc Order Submitted Elec per LSR	Svc Order Submitted Manually per LSR	Incremental Charge - Manual Svc Order vs. Electronic-1st	Incremental Charge - Manual Svc Order vs. Electronic-Add'l	Incremental Charge - Manual Svc Order vs. Electronic-Disc 1st	Incremental Charge - Manual Svc Order vs. Electronic-Disc Add'l
						Rec	Nonrecurring		Nonrecurring Disconnect		OSS Rates($)					
							First	Add'l	First	Add'l	SOMEC	SOMAN	SOMAN	SOMAN	SOMAN	SOMAN
2-WIRE Unbundled COPPER LOOP																
	2-Wire Unbundled Copper Loop - Non-Designed Zone 1		1	UEQ	UEQ2X	10.16	35.27	15.60					26.94	12.76	0.00	0.00
	2 Wire Unbundled Copper Loop - Non-Designed - Zone 2		2	UEQ	UEQ2X	17.55	35.27	15.60					26.94	12.76	0.00	0.00
	2 Wire Unbundled Copper Loop - Non-Designed - Zone 3		3	UEQ	UEQ2X	27.58	35.27	15.60					26.94	12.76	0.00	0.00
	Unbundled Miscellaneous Rate Element, Tag Loop at End User Premise			UEQ	URETL		8.33	0.83					26.94	12.76	0.00	0.00
	Order Coordination 2 Wire Unbundled Copper Loop - Non-Designed (per loop)			UEQ	USBMC	.	45.34									
	Unbundled Copper Loop, Non-Design Copper Loop, billing for BST providing make-up (Engineering Information - E.I.)			UEQ	UEQMU		28.74	28.74					26.94	12.76	0.00	0.00
	Loop Testing - Basic 1st Half Hour			UEQ	URET1		76.24						26.94	12.76	0.00	0.00
	Loop Testing - Basic Additional Half Hour			UEQ	URETA		39.51						26.94	12.76	0.00	0.00
	CLEC to CLEC Conversion Charge Without Outside Dispatch (UCL-ND)			UEQ	UREWO		14.26	7.42					26.94	12.76	0.00	0.00
UNBUNDLED EXCHANGE ACCESS LOOP																
2-WIRE ANALOG VOICE GRADE LOOP																
	2 Wire Analog Voice Grade Loop-Service Level 1-Line Splitting-Zone 1		1	UEPSR UEPSB	UEALS	12.11	57.99	42.37					26.94	12.76		
	2 Wire Analog Voice Grade Loop-Service Level 1-Line Splitting-Zone 1		1	UEPSR UEPSB	UEABS	12.11	57.99	42.37					26.94	12.76		
	2 Wire Analog Voice Grade Loop- Service Level 1-Line Splitting-Zone 2		2	UEPSR UEPSB	UEALS	21.24	57.99	42.37					26.94	12.76		
	2 Wire Analog Voice Grade Loop- Service Level 1-Line Splitting-Zone 2		2	UEPSR UEPSB	UEABS	21.24	57.99	42.37					26.94	12.76		
	2 Wire Analog Voice Grade Loop-Service Level 1-Line Splitting-Zone 3		3	UEPSR UEPSB	UEALS	33.65	57.99	42.37					26.94	12.76		
	2 Wire Analog Voice Grade Loop-Service Level 1-Line Splitting-Zone 3		3	UEPSR UEPSB	UEABS	33.65	57.99	42.37					26.94	12.76		
UNBUNDLED EXCHANGE ACCESS LOOP																
2-WIRE ANALOG VOICE GRADE LOOP																
	2-Wire Analog Voice Grade Loop - Service Level 2 w/Loop or Ground Start Signaling - Zone 1		1	UEA	UEAL2	14.97	142.97	106.56					26.94	12.76	0.00	0.00
	2-Wire Analog Voice Grade Loop - Service Level 2 w/Loop or Ground Start Signaling - Zone 2		2	UEA	UEAL2	25.93	142.97	106.56					26.94	12.76	0.00	0.00
	2-Wire Analog Voice Grade Loop - Service Level 2 w/Loop or Ground Start Signaling - Zone 3		3	UEA	UEAL2	40.81	142.97	106.56					26.94	12.76	0.00	0.00
	Order Coordination for Specified Conversion Time (per LSR)			UEA	OCOSL		45.34									
	2-Wire Analog Voice Grade Loop - Service Level 2 w/Reverse Battery Signaling - Zone 1		1	UEA	UEAR2	14.97	142.97	106.56					26.94	12.76	0.00	0.00
	2-Wire Analog Voice Grade Loop - Service Level 2 w/Reverse Battery Signaling - Zone 2		2	UEA	UEAR2	25.93	142.97	106.56					26.94	12.76	0.00	0.00
	2-Wire Analog Voice Grade Loop - Service Level 2 w/Reverse Battery Signaling - Zone 3		3	UEA	UEAR2	40.81	142.97	106.56					26.94	12.76	0.00	0.00
	Order Coordination for Specified Conversion Time (per LSR)			UEA	OCOSL		45.34									
	CLEC to CLEC Conversion Charge without outside dispatch			UEA	UREWO		87.64	36.33					26.94	12.76	0.00	0.00
	Loop Tagging - Service Level 2 (SL2)			UEA	URETL		11.20	1.10					26.94	12.76	0.00	0.00
4-WIRE ANALOG VOICE GRADE LOOP																
	4-Wire Analog Voice Grade Loop - Zone 1		1	UEA	UEAL4	21.32	288.47	237.45					26.94	12.76	0.00	0.00
	4-Wire Analog Voice Grade Loop - Zone 2		2	UEA	UEAL4	36.27	288.47	237.45					26.94	12.76	0.00	0.00
	4-Wire Analog Voice Grade Loop - Zone 3		3	UEA	UEAL4	56.57	288.47	237.45					26.94	12.76	0.00	0.00
	Order Coordination for Specified Conversion Time (per LSR)			UEA	OCOSL		45.34									
	CLEC to CLEC Conversion Charge without outside dispatch			UEA	UREWO		87.64	36.33					26.94	12.76	0.00	0.00
2-WIRE ISDN DIGITAL GRADE LOOP																
	2-Wire ISDN Digital Grade Loop - Zone 1		1	UDN	U1L2X	19.42	325.91	251.31					26.94	12.76	0.00	0.00
	2-Wire ISDN Digital Grade Loop - Zone 2		2	UDN	U1L2X	32.88	325.91	251.31					26.94	12.76	0.00	0.00
	2-Wire ISDN Digital Grade Loop - Zone 3		3	UDN	U1L2X	51.14	325.91	251.31					26.94	12.76	0.00	0.00
	Order Coordination For Specified Conversion Time (per LSR)			UDN	OCOSL		45.34									
	CLEC to CLEC Conversion Charge without outside dispatch			UDN	UREWO		91.55	44.12					26.94	12.76	0.00	0.00
2-WIRE Universal Digital Channel (UDC) COMPATIBLE LOOP																

UNBUNDLED NETWORK ELEMENTS - North Carolina														Attachment: 2		Exhibit: B	
CATEGORY		RATE ELEMENTS	Interim	Zone	BCS	USOC	RATES ($)					Svc Order Submitted Elec per LSR	Svc Order Submitted Manually per LSR	Incremental Charge - Manual Svc Order vs. Electronic-1st	Incremental Charge - Manual Svc Order vs. Electronic-Add'l	Incremental Charge - Manual Svc Order vs. Electronic-Disc 1st	Incremental Charge - Manual Svc Order vs. Electronic-Disc Add'l
							Rec	Nonrecurring		Nonrecurring Disconnect		OSS Rates($)					
								First	Add'l	First	Add'l	SOMEC	SOMAN	SOMAN	SOMAN	SOMAN	SOMAN
		2-Wire Universal Digital Channel (UDC) Compatible Loop - Zone 1		1	UDC	UDC2X	19.42	325.91	251.31					26.94	12.76	0.00	0.00
		2-Wire Universal Digital Channel (UDC) Compatible Loop - Zone 2		2	UDC	UDC2X	32.88	325.91	251.31					26.94	12.76	0.00	0.00
		2-Wire Universal Digital Channel (UDC) Compatible Loop - Zone 3		3	UDC	UDC2X	51.14	325.91	251.31					26.94	12.76	0.00	0.00
		CLEC to CLEC Conversion Charge without outside dispatch			UDC	UREWO		91.55	44.12					26.94	12.76	0.00	0.00
	2-WIRE ASYMMETRICAL DIGITAL SUBSCRIBER LINE (ADSL) COMPATIBLE LOOP																
		2 Wire Unbundled ADSL Loop including manual service inquiry & facility reservation - Zone 1		1	UAL	UAL2X	11.00	264.71	145.60					26.94	12.76	0.00	0.00
		2 Wire Unbundled ADSL Loop including manual service inquiry & facility reservation - Zone 2		2	UAL	UAL2X	18.39	264.71	145.60					26.94	12.76	0.00	0.00
		2 Wire Unbundled ADSL Loop including manual service inquiry & facility reservation - Zone 3		3	UAL	UAL2X	28.42	264.71	145.60					26.94	12.76	0.00	0.00
		Order Coordination for Specified Conversion Time (per LSR)			UAL	OCOSL		45.34									
		2 Wire Unbundled ADSL Loop without manual service inquiry & facility reservaton - Zone 1		1	UAL	UAL2W	11.00	190.25	114.82					26.94	12.76	0.00	0.00
		2 Wire Unbundled ADSL Loop without manual service inquiry & facility reservaton - Zone 2		2	UAL	UAL2W	18.39	190.25	114.82					26.94	12.76	0.00	0.00
		2 Wire Unbundled ADSL Loop without manual service inquiry & facility reservaton - Zone 3		3	UAL	UAL2W	28.42	190.25	114.82					26.94	12.76	0.00	0.00
		Order Coordination for Specified Conversion Time (per LSR)			UAL	OCOSL		45.34									
		CLEC to CLEC Conversion Charge without outside dispatch			UAL	UREWO		86.12	40.36					26.94	12.76	0.00	0.00
	2-WIRE HIGH BIT RATE DIGITAL SUBSCRIBER LINE (HDSL) COMPATIBLE LOOP																
		2 Wire Unbundled HDSL Loop including manual service inquiry & facility reservation - Zone 1		1	UHL	UHL2X	9.01	284.74	163.54					26.94	12.76	0.00	0.00
		2 Wire Unbundled HDSL Loop including manual service inquiry & facility reservation - Zone 2		2	UHL	UHL2X	14.87	284.74	163.54					26.94	12.76	0.00	0.00
		2 Wire Unbundled HDSL Loop including manual service inquiry & facility reservation - Zone 3		3	UHL	UHL2X	22.82	284.74	163.54					26.94	12.76	0.00	0.00
		Order Coordination for Specified Conversion Time (per LSR)			UHL	OCOSL		45.34									
		2 Wire Unbundled HDSL Loop without manual service inquiry and facility reservation - Zone 1		1	UHL	UHL2W	9.01	207.48	132.05					26.94	12.76	0.00	0.00
		2 Wire Unbundled HDSL Loop without manual service inquiry and facility reservation - Zone 2		2	UHL	UHL2W	14.87	207.48	132.05					26.94	12.76	0.00	0.00
		2 Wire Unbundled HDSL Loop without manual service inquiry and facility reservation - Zone 3		3	UHL	UHL2W	22.82	207.48	132.05					26.94	12.76	0.00	0.00
		Order Coordination for Specified Conversion Time (per LSR)			UHL	OCOSL		45.34									
		CLEC to CLEC Conversion Charge without outside dispatch			UHL	UREWO		86.06	40.36					26.94	12.76	0.00	0.00
	4-WIRE HIGH BIT RATE DIGITAL SUBSCRIBER LINE (HDSL) COMPATIBLE LOOP																
		4 Wire Unbundled HDSL Loop including manual service inquiry and facility reservation - Zone 1		1	UHL	UHL4X	10.62	341.65	220.45					26.94	12.76	0.00	0.00
		4-Wire Unbundled HDSL Loop including manual service inquiry and facility reservation - Zone 2		2	UHL	UHL4X	17.67	341.65	220.45					26.94	12.76	0.00	0.00
		4-Wire Unbundled HDSL Loop including manual service inquiry and facility reservation - Zone 3		3	UHL	UHL4X	27.24	341.65	220.45					26.94	12.76	0.00	0.00
		Order Coordination for Specified Conversion Time (per LSR)			UHL	OCOSL		45.34									
		4-Wire Unbundled HDSL Loop without manual service inquiry and facility reservation - Zone 1		1	UHL	UHL4W	10.62	264.39	188.96					26.94	12.76	0.00	0.00
		4-Wire Unbundled HDSL Loop without manual service inquiry and facility reservation - Zone 2		2	UHL	UHL4W	17.67	264.39	188.96					26.94	12.76	0.00	0.00
		4-Wire Unbundled HDSL Loop without manual service inquiry and facility reservation - Zone 3		3	UHL	UHL4W	27.24	264.39	188.96					26.94	12.76	0.00	0.00
		Order Coordination for Specified Conversion Time (per LSR)			UHL	OCOSL		45.34									
		CLEC to CLEC Conversion Charge without outside dispatch			UHL	UREWO		86.06	40.36					26.94	12.76	0.00	0.00
	4-WIRE DS1 DIGITAL LOOP																
		4-Wire DS1 Digital Loop - Zone 1		1	USL	USLXX	47.60	714.84	421.47					42.19	12.76	0.00	0.00
		4-Wire DS1 Digital Loop - Zone 2		2	USL	USLXX	84.36	714.84	421.47					42.19	12.76	0.00	0.00
		4-Wire DS1 Digital Loop - Zone 3		3	USL	USLXX	134.29	714.84	421.47					42.19	12.76	0.00	0.00

UNBUNDLED NETWORK ELEMENTS - North Carolina													Attachment: 2		Exhibit: B	
CATEGORY	RATE ELEMENTS	Interim	Zone	BCS	USOC	RATES ($)					Svc Order Submitted Elec per LSR	Svc Order Submitted Manually per LSR	Incremental Charge - Manual Svc Order vs. Electronic-1st	Incremental Charge - Manual Svc Order vs. Electronic-Add'l	Incremental Charge - Manual Svc Order vs. Electronic-Disc 1st	Incremental Charge - Manual Svc Order vs. Electronic-Disc Add'l
						Rec	Nonrecurring		Nonrecurring Disconnect		OSS Rates($)					
							First	Add'l	First	Add'l	SOMEC	SOMAN	SOMAN	SOMAN	SOMAN	SOMAN
	Order Coordination for Specified Conversion Time (per LSR)			USL	OCOSL		48.31									
	CLEC to CLEC Conversion Charge without outside dispatch			USL	UREWO		100.99	43.00					26.94	12.76	0.00	0.00
4-WIRE 19.2, 56 OR 64 KBPS DIGITAL GRADE LOOP																
	4 Wire Unbundled Digital 19.2 Kbps		1	UDL	UDL19	25.32	489.04	337.51					26.94	12.76	0.00	0.00
	4 Wire Unbundled Digital 19.2 Kbps		2	UDL	UDL19	43.11	489.04	337.51					26.94	12.76	0.00	0.00
	4 Wire Unbundled Digital 19.2 Kbps		3	UDL	UDL19	67.26	489.04	337.51					26.94	12.76	0.00	0.00
	4 Wire Unbundled Digital Loop 56 Kbps - Zone 1		1	UDL	UDL56	25.32	489.04	337.51					26.94	12.76	0.00	0.00
	4 Wire Unbundled Digital Loop 56 Kbps - Zone 2		2	UDL	UDL56	43.11	489.04	337.51					26.94	12.76	0.00	0.00
	4 Wire Unbundled Digital Loop 56 Kbps - Zone 3		3	UDL	UDL56	67.26	489.04	337.51					26.94	12.76	0.00	0.00
	Order Coordination for Specified Conversion Time (per LSR)			UDL	OCOSL		45.34									
	4 Wire Unbundled Digital Loop 64 Kbps - Zone 1		1	UDL	UDL64	25.32	489.04	337.51					26.94	12.76	0.00	0.00
	4 Wire Unbundled Digital Loop 64 Kbps - Zone 2		2	UDL	UDL64	43.11	489.04	337.51					26.94	12.76	0.00	0.00
	4 Wire Unbundled Digital Loop 64 Kbps - Zone 3		3	UDL	UDL64	67.26	489.04	337.51					26.94	12.76	0.00	0.00
	Order Coordination for Specified Conversion Time (per LSR)			UDL	OCOSL		45.34									
	CLEC to CLEC Conversion Charge without outside dispatch			UDL	UREWO		102.03	49.70					26.94	12.76	0.00	0.00
2-WIRE Unbundled COPPER LOOP																
	2-Wire Unbundled Copper Loop/Short including manual service inquiry & facility reservation - Zone 1		1	UCL	UCLPB	13.26	262.86	143.75					26.94	12.76	0.00	0.00
	2-Wire Unbundled Copper Loop/Short including manual service inquiry & facility reservation - Zone 2		2	UCL	UCLPB	22.39	262.86	143.75					26.94	12.76	0.00	0.00
	2 Wire Unbundled Copper Loop/Short including manual service inquiry & facility reservation - Zone 3		3	UCL	UCLPB	34.80	262.86	143.75					26.94	12.76	0.00	0.00
	Order Coordination for Unbundled Copper Loops (per loop)			UCL	UCLMC		61.38	61.38								
	2-Wire Unbundled Copper Loop/Short without manual service inquiry and facility reservation - Zone 1		1	UCL	UCLPW	13.26	188.39	112.96					26.94	12.76	0.00	0.00
	2-Wire Unbundled Copper Loop/Short without manual service inquiry and facility reservation - Zone 2		2	UCL	UCLPW	22.39	188.39	112.96					26.94	12.76	0.00	0.00
	2-Wire Unbundled Copper Loop/Short without manual service inquiry and facility reservation - Zone 3		3	UCL	UCLPW	34.80	188.39	112.96					26.94	12.76	0.00	0.00
	Order Coordination for Unbundled Copper Loops (per loop)			UCL	UCLMC		61.38	61.38								
	2-Wire Unbundled Copper Loop/Long - includes manual srvc. inquiry and facility reservation - Zone 1		1	UCL	UCL2L	13.26	262.86	143.75					26.94	12.76	0.00	0.00
	2-Wire Unbundled Copper Loop/Long - includes manual svc. inquiry and facility reservation - Zone 2		2	UCL	UCL2L	22.39	262.86	143.75					26.94	12.76	0.00	0.00
	2-Wire Unbundled Copper Loop/Long - includes manual svc. inquiry and facility reservation - Zone 3		3	UCL	UCL2L	34.80	262.86	143.75					26.94	12.76	0.00	0.00
	Order Coordination for Unbundled Copper Loops (per loop)			UCL	UCLMC		61.38	61.38								
	2-Wire Unbundled Copper Loop/Long - without manual service inquiry and facility reservation - Zone 1		1	UCL	UCL2W	13.26	188.39	112.96					26.94	12.76	0.00	0.00
	2-Wire Unbundled Copper Loop/Long - without manual service inquiry and facility reservation - Zone 2		2	UCL	UCL2W	22.39	188.39	112.96					26.94	12.76	0.00	0.00
	2-Wire Unbundled Copper Loop/Long - without manual service inquiry and facility reservation - Zone 3		3	UCL	UCL2W	34.80	188.39	112.96					26.94	12.76	0.00	0.00
	Order Coordination for Unbundled Copper Loops (per loop)			UCL	UCLMC		61.38	61.38								
	CLEC to CLEC Conversion Charge without outside dispatch (UCL-Des)			UCL	UREWO		97.14	42.44					26.94	12.76	0.00	0.00
4-WIRE COPPER LOOP																
	4-Wire Copper Loop/Short - including manual service inquiry and facility reservation - Zone 1		1	UCL	UCL4S	17.36	311.03	191.93					26.94	12.76	0.00	0.00
	4-Wire Copper Loop/Short - including manual service inquiry and facility reservation - Zone 2		2	UCL	UCL4S	29.61	311.03	191.93					26.94	12.76	0.00	0.00
	4-Wire Copper Loop/Short - including manual service inquiry and facility reservation - Zone 3		3	UCL	UCL4S	46.26	311.03	191.93					26.94	12.76	0.00	0.00
	Order Coordination for Unbundled Copper Loops (per loop)			UCL	UCLMC		61.38	61.38								
	4-Wire Copper Loop/Short - without manual service inquiry and facility reservation - Zone 1		1	UCL	UCL4W	17.36	236.57	161.14					26.94	12.76	0.00	0.00
	4-Wire Copper Loop/Short - without manual service inquiry and facility reservation - Zone 2		2	UCL	UCL4W	29.61	236.57	161.14					26.94	12.76	0.00	0.00

UNBUNDLED NETWORK ELEMENTS - North Carolina														Attachment: 2		Exhibit: B	
CATEGORY		RATE ELEMENTS	Interim	Zone	BCS	USOC	RATES ($)					Svc Order Submitted Elec per LSR	Svc Order Submitted Manually per LSR	Incremental Charge - Manual Svc Order vs. Electronic-1st	Incremental Charge - Manual Svc Order vs. Electronic-Add'l	Incremental Charge - Manual Svc Order vs. Electronic-Disc 1st	Incremental Charge - Manual Svc Order vs. Electronic-Disc Add'l
							Rec	Nonrecurring		Nonrecurring Disconnect		OSS Rates($)					
								First	Add'l	First	Add'l	SOMEC	SOMAN	SOMAN	SOMAN	SOMAN	SOMAN
		4-Wire Copper Loop/Short - without manual service inquiry and facility reservation - Zone 3		3	UCL	UCL4W	46.26	236.57	161.14					26.94	12.76	0.00	0.00
		Order Coordination for Unbundled Copper Loops (per loop)			UCL	UCLMC		61.38	61.38								
		4-Wire Unbundled Copper Loop/Long - includes manual svc. inquiry and facility reservation - Zone 1		1	UCL	UCL4L	17.36	311.03	191.93					26.94	12.76	0.00	0.00
		4-Wire Unbundled Copper Loop/Long - includes manual svc. inquiry and facility reservation - Zone 2		2	UCL	UCL4L	29.61	311.03	191.93					26.94	12.76	0.00	0.00
		4-Wire Unbundled Copper Loop/Long - includes manual svc. inquiry and facility reservation - Zone 3		3	UCL	UCL4L	46.26	311.03	191.93					26.94	12.76	0.00	0.00
		Order Coordination for Unbundled Copper Loops (per loop)			UCL	UCLMC		61.38	61.38								
		4-Wire Unbundled Copper Loop/Long - without manual svc. inquiry and facility reservation - Zone 1		1	UCL	UCL4O	17.36	236.57	161.14					26.94	12.76	0.00	0.00
		4-Wire Unbundled Copper Loop/Long - without manual svc. inquiry and facility reservation - Zone 2		2	UCL	UCL4O	29.61	236.57	161.14					26.94	12.76	0.00	0.00
		4-Wire Unbundled Copper Loop/Long - without manual svc. inquiry and facility reservation - Zone 3		3	UCL	UCL4O	46.26	236.57	161.14					26.94	12.76	0.00	0.00
		Order Coordination for Unbundled Copper Loops (per loop)			UCL	UCLMC		61.38	61.38								
		CLEC to CLEC Conversion Charge without outside dispatch (UCL-Des)			UCL	UREWO		97.14	42.44								
LOOP MODIFICATION																	
		Unbundled Loop Modification, Removal of Load Coils - 2 Wire pair less than or equal to 18k ft			UAL, UHL, UCL, UEQ, ULS, UEA, UEANL, UEPSR, UEPSB	ULM2L		21.24	21.24					26.94	12.76	0.00	0.00
		Unbundled Loop Modification, Removal of Load Coils - 2 wire greater than 18k ft			UCL, ULS, UEQ	ULM2G		119.24	119.24					26.94	12.76	0.00	0.00
		Unbundled Loop Modification Removal of Load Coils - 4 Wire less than or equal to 18K ft			UHL, UCL, UEA	ULM4L		21.24	21.24					26.94	12.76	0.00	0.00
		Unbundled Loop Modification Removal of Load Coils - 4 Wire pair greater than 18k ft			UCL	ULM4G		119.24	119.24					26.94	12.76	0.00	0.00
		Unbundled Loop Modification Removal of Bridged Tap Removal, per unbundled loop			UAL, UHL, UCL, UEQ, ULS, UEA, UEANL, UEPSR, UEPSB	ULMBT		24.84	24.84					26.94	12.76	0.00	0.00
SUB-LOOPS																	
	Sub-Loop Distribution																
		Sub-Loop - Per Cross Box Location - CLEC Feeder Facility Set-Up	I		UEANL	USBSA		373.57						26.94	12.76	0.00	0.00
		Sub-Loop - Per Cross Box Location - Per 25 Pair Panel Set-Up	I		UEANL	USBSB		33.78						26.94	12.76	0.00	0.00
		Sub-Loop - Per Building Equipment Room - CLEC Feeder Facility Set-Up	I		UEANL	USBSC		234.76						26.94	12.76	0.00	0.00
		Sub-Loop - Per Building Equipment Room - Per 25 Pair Panel Set-Up	I		UEANL	USBSD		81.05						26.94	12.76	0.00	0.00
		Sub-Loop Distribution Per 2-Wire Analog Voice Grade Loop - Zone 1	I	1	UEANL	USBN2	7.31	126.03	54.54					26.94	12.76	0.00	0.00
		Sub-Loop Distribution Per 2-Wire Analog Voice Grade Loop - Zone 2	I	2	UEANL	USBN2	11.93	126.03	54.54					26.94	12.76	0.00	0.00
		Sub-Loop Distribution Per 2-Wire Analog Voice Grade Loop - Zone 3	I	3	UEANL	USBN2	18.20	126.03	54.54					26.94	12.76	0.00	0.00
		Order Coordination for Unbundled Sub-Loops, per sub-loop pair			UEANL	USBMC		61.38	61.38								
		Sub-Loop Distribution Per 4-Wire Analog Voice Grade Loop - Zone 1		1	UEANL	USBN4	8.44	156.52	79.66					26.94	12.76	0.00	0.00
		Sub-Loop Distribution Per 4-Wire Analog Voice Grade Loop - Zone 2		2	UEANL	USBN4	13.81	156.52	79.66					26.94	12.76	0.00	0.00
		Sub-Loop Distribution Per 4-Wire Analog Voice Grade Loop - Zone 3		3	UEANL	USBN4	21.10	156.52	79.66					26.94	12.76	0.00	0.00

UNBUNDLED NETWORK ELEMENTS - North Carolina														Attachment: 2		Exhibit: B	
CATEGORY		RATE ELEMENTS	Interim	Zone	BCS	USOC	RATES ($)					Svc Order Submitted Elec per LSR	Svc Order Submitted Manually per LSR	Incremental Charge - Manual Svc Order vs. Electronic-1st	Incremental Charge - Manual Svc Order vs. Electronic-Add'l	Incremental Charge - Manual Svc Order vs. Electronic-Disc 1st	Incremental Charge - Manual Svc Order vs. Electronic-Disc Add'l
							Rec	Nonrecurring		Nonrecurring Disconnect		OSS Rates($)					
								First	Add'l	First	Add'l	SOMEC	SOMAN	SOMAN	SOMAN	SOMAN	SOMAN
		Order Coordination for Unbundled Sub-Loops, per sub-loop pair			UEANL	USBMC		61.38	61.38								
		Sub-Loop 2-Wire Intrabuilding Network Cable (INC)	I		UEANL	USBR2	2.79	114.05	37.20					26.94	12.76	0.00	0.00
		Order Coordination for Unbundled Sub-Loops, per sub-loop pair			UEANL	USBMC		61.38	61.38								
		Sub-Loop 4-Wire Intrabuilding Network Cable (INC)	I		UEANL	USBR4	3.74	127.67	50.82					26.94	12.76	0.00	0.00
		Order Coordination for Unbundled Sub-Loops, per sub-loop pair			UEANL	USBMC		61.38	61.38								
		2 Wire Copper Unbundled Sub-Loop Distribution - Zone 1	I	1	UEF	UCS2X	6.10	137.10	60.24					26.94	12.76	0.00	0.00
		2 Wire Copper Unbundled Sub-Loop Distribution - Zone 2	I	2	UEF	UCS2X	9.70	137.10	60.24					26.94	12.76	0.00	0.00
		2 Wire Copper Unbundled Sub-Loop Distribution - Zone 3	I	3	UEF	UCS2X	14.59	137.10	60.24					26.94	12.76	0.00	0.00
		Order Coordination for Unbundled Sub-Loops, per sub-loop pair			UEF	USBMC		61.38	61.38								
		4 Wire Copper Unbundled Sub-Loop Distribution - Zone 1	I	1	UEF	UCS4X	6.58	162.24	85.38					26.94	12.76	0.00	0.00
		4 Wire Copper Unbundled Sub-Loop Distribution - Zone 2	I	2	UEF	UCS4X	10.51	162.24	85.38					26.94	12.76	0.00	0.00
		4 Wire Copper Unbundled Sub-Loop Distribution - Zone 3	I	3	UEF	UCS4X	15.84	162.24	85.38					26.94	12.76	0.00	0.00
		Order Coordination for Unbundled Sub-Loops, per sub-loop pair			UEF	USBMC		61.38	61.38								
	Unbundled Network Terminating Wire (UNTW)																
		Unbundled Network Terminating Wire (UNTW) per Pair			UENTW	UENPP	0.4351	64.98						26.94	12.76	0.00	0.00
	Network Interface Device (NID)																
		Network Interface Device (NID) - 1-2 lines	I		UENTW	UND12		86.37	56.69					26.94	12.76	0.00	0.00
		Network Interface Device (NID) - 1-6 lines	I		UENTW	UND16		127.93	98.21					26.94	12.76	0.00	0.00
		Network Interface Device Cross Connect - 2 W	I		UENTW	UNDC2		11.68	11.68					26.94	12.76	0.00	0.00
		Network Interface Device Cross Connect - 4W	I		UENTW	UNDC4		11.68	11.68					26.94	12.76	0.00	0.00
SUB-LOOPS																	
	Sub-Loop Feeder																
		USL-Feeder, DS0 Set-up per Cross Box location - CLEC Distribution Facility set-up			UEA, UDN,UCL,UDL,UDC	USBFW		373.57						26.94	12.76	0.00	0.00
		USL Feeder - DS0 Set-up per Cross Box location - per 25 pair set-up			UEA, UDN,UCL,UDL,UDC	USBFX		33.78	33.78					26.94	12.76	0.00	0.00
		USL Feeder DS1 Set-up at DSX location, per DS1 termination			USL	USBFZ		523.51	11.31					26.94	12.76	0.00	0.00
		Unbundled Sub-Loop Feeder Loop, 2 Wire Ground Start, Voice Grade - Zone 1		1	UEA	USBFA	10.41	122.52	46.61					26.94	12.76	0.00	0.00
		Unbundled Sub-Loop Feeder Loop, 2 Wire Ground-Start, Voice Grade - Zone 2		2	UEA	USBFA	17.31	122.52	46.61					26.94	12.76	0.00	0.00
		Unbundled Sub-Loop Feeder Loop, Per 2 Wire Ground-Start, Voice Grade - Zone 3		3	UEA	USBFA	26.67	122.52	46.61					26.94	12.76	0.00	0.00
		Order Coordination for Specified Conversion Time, per LSR			UEA	OCOSL		45.34									
		Unbundlde Sub-Loop Feeder Loop, 2 Wire Loop-Start, Voice Grade - Zone 1		1	UEA	USBFB	10.41	122.52	46.61					26.94	12.76	0.00	0.00
		Unbundled Sub-Loop Feeder Loop, 2 Wire Loop-Start, Voice Grade - Zone 2		2	UEA	USBFB	17.31	122.52	46.61					26.94	12.76	0.00	0.00
		Unbundled Sub-Loop Feeder Loop, 2 Wire Start Loop, Voice Grade - Zone 3		3	UEA	USBFB	26.67	122.52	46.61					26.94	12.76	0.00	0.00
		Order Coordination for Specified Time Conversion, per LSR			UEA	OCOSL		45.34									
		Unbundled Sub-Loop Feeder Loop, 2 Wire Reverse Battery, Voice Grade - Zone 1		1	UEA	USBFC	10.41	122.52	46.61					26.94	12.76	0.00	0.00
		Unbundled Sub-Loop Feeder Loop, 2 Wire Reverse Battery, Voice Grade - Zone 2		2	UEA	USBFC	17.31	122.52	46.61					26.94	12.76	0.00	0.00
		Unbundled Sub-Loop Feeder Loop, 2 Wire Analog Reverse Battery, Voice Grade - Zone 3		3	UEA	USBFC	26.67	122.52	46.61					26.94	12.76	0.00	0.00
		Order Coordination For Specified Conversion Time, per LSR			UEA	OCOSL		45.34									
		Unbundled Sub-Loop Feeder Loop, 4 Wire Ground-Start, Voice Grade - Zone 1		1	UEA	USBFD	19.96	226.36	144.28					26.94	12.76	0.00	0.00
		Unbundled Sub-Loop Feeder Loop, 4 Wire Ground-Start, Voice Grade - Zone 2		2	UEA	USBFD	33.91	226.36	144.28					26.94	12.76	0.00	0.00
		Unbundled Sub-Loop Feeder Loop, 4 Wire Ground Start, Voice Grade - Zone 3		3	UEA	USBFD	52.85	226.36	144.28					26.94	12.76	0.00	0.00

UNBUNDLED NETWORK ELEMENTS - North Carolina														Attachment: 2		Exhibit: B	
CATEGORY		RATE ELEMENTS	Interim	Zone	BCS	USOC	RATES ($)					Svc Order Submitted Elec per LSR	Svc Order Submitted Manually per LSR	Incremental Charge - Manual Svc Order vs. Electronic-1st	Incremental Charge - Manual Svc Order vs. Electronic-Add'l	Incremental Charge - Manual Svc Order vs. Electronic-Disc 1st	Incremental Charge - Manual Svc Order vs. Electronic-Disc Add'l
							Rec	Nonrecurring		Nonrecurring Disconnect		OSS Rates($)					
								First	Add'l	First	Add'l	SOMEC	SOMAN	SOMAN	SOMAN	SOMAN	SOMAN
		Order Coordination For Specified Conversion Time, Per LSR			UEA	OCOSL		45.34									
		Unbundled Sub-Loop Feeder Loop, 4 Wire Loop-Start, Voice Grade - Zone 1		1	UEA	USBFE	19.96	226.36	144.28					26.94	12.76	0.00	0.00
		Unbundled Sub-Loop Feeder Loop, 4 Wire Loop-Start, Voice Grade - Zone 2		2	UEA	USBFE	33.91	226.36	144.28					26.94	12.76	0.00	0.00
		Unbundled Sub-Loop Feeder Loop, 4 Wire Loop-Start, Voice Grade - Zone 3		3	UEA	USBFE	52.85	226.36	144.28					26.94	12.76	0.00	0.00
		Order Coordination For Specified Conversion Time, Per LSR			UEA	OCOSL		45.34									
		Unbundled Sub-Loop Feeder Loop, 2 Wire ISDN BRI - Zone 1		1	UDN	USBFF	17.24	202.01	105.88					26.94	12.76	0.00	0.00
		Unbundled Sub-Loop Feeder Loop, 2-Wire ISDN BRI - Zone 2		2	UDN	USBFF	29.17	202.01	105.88					26.94	12.76	0.00	0.00
		Unbundled Sub-Loop Feeder Loop, 2-Wire ISDN BRI - Zone 3		3	UDN	USBFF	45.37	202.01	105.88					26.94	12.76	0.00	0.00
		Order Coordination For Specified Conversion Time, Per LSR			UDN	OCOSL		45.34									
		Unbundled Sub-Loop Feeder, 2 Wire UDC (IDSL compatible)		1	UDC	USBFS	17.24	202.01	105.88					26.94	12.76	0.00	0.00
		Unbundled Sub-Loop Feeder, 2 Wire UDC (IDSL compatible)		2	UDC	USBFS	29.17	202.01	105.88					26.94	12.76	0.00	0.00
		Unbundled Sub-Loop Feeder, 2 Wire UDC (IDSL compatible)		3	UDC	USBFS	45.37	202.01	105.88					26.94	12.76	0.00	0.00
		Unbundled Sub-Loop Feeder Loop, 4-Wire DS1 - Zone 1		1	USL	USBFG	35.65	393.01	153.37					42.19	12.76	0.00	0.00
		Unbundled Sub-Loop Feeder Loop, 4-Wire DS1 - Zone 2		2	USL	USBFG	63.18	393.01	153.37					42.19	12.76	0.00	0.00
		Unbundled Sub-Loop Feeder Loop, 4-Wire DS1 - Zone 3		3	USL	USBFG	100.58	393.01	153.37					42.19	12.76	0.00	0.00
		Order Coordination For Specified Conversion Time, Per LSR			USL	OCOSL		48.31									
		Unbundled Sub-Loop Feeder, 2-Wire Copper Loop - Zone 1		1	UCL	USBFH	9.14	172.89	90.81					26.94	12.76	0.00	0.00
		Unbundled Sub-Loop Feeder Loop, 2-Wire Copper Loop - Zone 2		2	UCL	USBFH	14.90	172.89	90.81					26.94	12.76	0.00	0.00
		Unbundled Sub-Loop Feeder Loop, 2-Wire Copper Loop - Zone 3		3	UCL	USBFH	22.71	172.89	90.81					26.94	12.76	0.00	0.00
		Order Coordination For Specified Conversion Time, per LSR			UCL	OCOSL		45.34									
		Sub-Loop Feeder - Per 4-Wire Copper Loop - Zone 1		1	UCL	USBFJ	13.41	207.14	134.77					26.94	12.76	0.00	0.00
		Sub-Loop Feeder - Per 4-Wire Copper Loop - Zone 2		2	UCL	USBFJ	22.42	207.14	134.77					26.94	12.76	0.00	0.00
		Sub-Loop Feeder - Per 4-Wire Copper Loop - Zone 3		3	UCL	USBFJ	34.66	207.14	134.77					26.94	12.76	0.00	0.00
		Order Coordination For Specified Conversion Time, per LSR			UCL	OCOSL		45.34									
		Sub-Loop Feeder - Per 4-Wire 19.2 Kbps Digital Grade Loop		1	UDL	USBFN	24.27	215.00	132.92					26.94	12.76	0.00	0.00
		Sub-Loop Feeder - Per 4-Wire 19.2 Kbps Digital Grade Loop		2	UDL	USBFN	41.55	215.00	132.92					26.94	12.76	0.00	0.00
		Sub-Loop Feeder - Per 4-Wire 19.2 Kbps Digital Grade Loop		3	UDL	USBFN	65.02	215.00	132.92					26.94	12.76	0.00	0.00
		Sub-Loop Feeder - Per 4-Wire 56 Kbps Digital Grade Loop - Zone 1		1	UDL	USBFO	24.27	215.00	132.92					26.94	12.76	0.00	0.00
		Sub-Loop Feeder - Per 4-Wire 56 Kbps Digital Grade Loop - Zone 2		2	UDL	USBFO	41.55	215.00	132.92					26.94	12.76	0.00	0.00
		Sub-Loop Feeder - Per 4-Wire 56 Kbps Digital Grade Loop - Zone 3		3	UDL	USBFO	65.02	215.00	132.92					26.94	12.76	0.00	0.00
		Order Coordination For Specified Time Conversion, per LSR			UDL	OCOSL		45.34									
		Sub-Loop Feeder - Per 4-Wire 64 Kbps Digital Grade Loop - Zone 1		1	UDL	USBFP	24.27	215.00	132.92					26.94	12.76	0.00	0.00
		Sub-Loop Feeder - Per 4-Wire 64 Kbps Digital Grade Loop - Zone 2		2	UDL	USBFP	41.55	215.00	132.92					26.94	12.76	0.00	0.00
		Sub-Loop Feeder - Per 4-Wire 64 Kbps Digital Grade Loop - Zone 3		3	UDL	USBFP	65.02	215.00	132.92					26.94	12.76	0.00	0.00
		Order Coordination For Specified Conversion Time, per LSR			UDL	OCOSL		45.34									
SUB-LOOPS																	
	Sub-Loop Feeder																
		Sub Loop Feeder - DS3 - Per Mile Per Month	I		UE3	1L5SL	16.03										
		Sub Loop Feeder - DS3 - Facility Termination Per Month	I		UE3	USBF1	350.32	3,399.57	406.81	164.08	93.01			26.94	12.76		
		Sub Loop Feeder – STS-1 – Per Mile Per Month	I		UDLSX	1L5SL	16.03										
		Sub Loop Feeder - STS-1 - Facility Termination Per Month	I		UDLSX	USBF7	376.06	3,399.57	406.81	164.08	93.01			26.94	12.76		
UNBUNDLED LOOP CONCENTRATION																	
		Unbundled Loop Concentration - System A (TR008)			ULC	UCT8A	398.41	652.26	652.26					19.99	19.99	19.99	19.99
		Unbundled Loop Concentration - System B (TR008)			ULC	UCT8B	58.36	271.78	271.78					19.99	19.99	19.99	19.99
		Unbundled Loop Concentration - System A (TR303)			ULC	UCT3A	439.73	652.25	652.26					19.99	19.99	19.99	19.99
		Unbundled Loop Concentration - System B (TR303)			ULC	UCT3B	98.34	271.78	271.78					19.99	19.99	19.99	19.99
		Unbundled Loop Concentration - DS1 Loop Interface Card			ULC	UCTCO	5.52	126.85	92.35	33.65	9.42			19.99	19.99	19.99	19.99

UNBUNDLED NETWORK ELEMENTS - North Carolina														Attachment: 2		Exhibit: B	
CATEGORY		RATE ELEMENTS	Interim	Zone	BCS	USOC	RATES ($)					Svc Order Submitted Elec per LSR	Svc Order Submitted Manually per LSR	Incremental Charge - Manual Svc Order vs. Electronic-1st	Incremental Charge - Manual Svc Order vs. Electronic-Add'l	Incremental Charge - Manual Svc Order vs. Electronic-Disc 1st	Incremental Charge - Manual Svc Order vs. Electronic-Disc Add'l
							Rec	Nonrecurring		Nonrecurring Disconnect		OSS Rates($)					
								First	Add'l	First	Add'l	SOMEC	SOMAN	SOMAN	SOMAN	SOMAN	SOMAN
		Unbundled Loop Concentration - ISDN Loop Interface (Brite Card)			UDN	ULCC1	8.77	21.11	21.00	10.81	10.74			19.99	19.99	19.99	19.99
		Unbundled Loop Concentration - UDC Loop Interface (Brite Card)			UDC	ULCCU	8.77	21.11	21.00	10.81	10.74			19.99	19.99	19.99	19.99
		Unbundled Loop Concentration - -2 Wire Voice-Loop Start or Ground Start Loop Interface (POTS Card)			UEA	ULCC2	0.89	35.73	35.49					19.99	19.99	19.99	19.99
		Unbundled Loop Concentration - 2 Wire Voice - Reverse Battery Loop Interface (SPOTS Card)			UEA	ULCCR	13.03	21.11	21.00	10.81	10.74			19.99	19.99	19.99	19.99
		Unbundled Loop Concentration - 4 Wire Voice Loop Interface (Specials Card)			UEA	ULCC4	7.77	21.11	21.00	10.81	10.74			19.99	19.99	19.99	19.99
		Unbundled Loop Concentration - TEST CIRCUIT Card			ULC	UCTTC	37.98	21.11	21.00	10.81	10.74			19.99	19.99	19.99	19.99
		Unbundled Loop Concentration - Digital 19.2 Kbps Data Loop Interface			UDL	ULCC7	11.51	21.11	21.00	10.81	10.74			19.99	19.99	19.99	19.99
		Unbundled Loop Concentration - Digital 56 Kbps Data Loop Interface			UDL	ULCC5	11.51	21.11	21.00	10.81	10.74			19.99	19.99	19.99	19.99
		Unbundled Loop Concentration - Digital 64 Kbps Data Loop Interface			UDL	ULCC6	11.51	21.11	21.00	10.81	10.74			19.99	19.99	19.99	19.99
UNE OTHER, PROVISIONING ONLY - NO RATE																	
		NID - Dispatch and Service Order for NID installation			UENTW	UNDBX	0.00	0.00									
		UNTW Circuit Id Establishment, Provisioning Only - No Rate			UENTW	UENCE	0.00	0.00									
		Unbundled Contract Name, Provisioning Only - No Rate			UEANL,UEF,UEQ,UENTW	UNECN	0.00	0.00									
UNE OTHER, PROVISIONING ONLY - NO RATE																	
		Unbundled Contact Name, Provisioning Only - no rate			UAL,UCL,UDC,UDL,UDN,UEA,UHL,ULC	UNECN	0.00	0.00									
		Unbundled Sub-Loop Feeder-2 Wire Cross Box Jumper - no rate			UEA,UDN,UCL,UDC	USBFQ	0.00	0.00									
		Unbundled Sub-Loop Feeder-4 Wire Cross Box Jumper - no rate			UEA,USL,UCL,UDL	USBFR	0.00	0.00									
		Unbundled DS1 Loop - Superframe Format Option - no rate			USL	CCOSF	0.00	0.00									
		Unbundled DS1 Loop - Expanded Superframe Format option - no rate			USL	CCOEF	0.00	0.00									
HIGH CAPACITY UNBUNDLED LOCAL LOOP																	
	NOTE: minimum billing period of three months for DS3/STS-1 Local Loop																
		High Capacity Unbundled Local Loop - DS3 - Per Mile per month			UE3	1L5ND	13.33										
		High Capacity Unbundled Local Loop - DS3 - Facility Termination per month			UE3	UE3PX	450.69	1,071.00	646.12					53.48	53.48		
		High Capacity Unbundled Local Loop - STS-1 - Per Mile per month			UDLSX	1L5ND	13.33										
		High Capacity Unbundled Local Loop - STS-1 - Facility Termination per month			UDLSX	UDLS1	464.26	1,071.00	646.12					53.48	53.48		
LOOP MAKE-UP																	
		Loop Makeup - Preordering Without Reservation, per working or spare facility queried (Manual).			UMK	UMKLW		55.44	55.44								
		Loop Makeup - Preordering With Reservation, per spare facility queried (Manual).			UMK	UMKLP		55.73	55.73								
HIGH FREQUENCY SPECTRUM																	
	LINE SHARING																
	SPLITTERS-CENTRAL OFFICE BASED																
		Line Sharing Splitter, per System 96 Line Capacity			ULS	ULSDA	181.18	631.54	0.00					26.94	12.76		
		Line Sharing Splitter, per System 24 Line Capacity			ULS	ULSDB	38.99	631.54	0.00					26.94	12.76		
		Line Sharing Splitter, Per System, 8 Line Capacity	I		ULS	ULSD8	12.73	424.61	0.00					26.94	12.76		
		Line Sharing-DLEC Owned Splitter in CO-CFA activaton-deactivation (per LSOD)			ULS	ULSDG		146.32	31.27					26.94	12.76		
	END USER ORDERING-CENTRAL OFFICE BASED-HIGH FREQUENCY SPECTRUM AKA LINE SHARING																
		Line Sharing - per Line Activation (BST Owned Splitter)			ULS	ULSDC	0.61	54.71	28.77					26.94	12.76		

CATEGORY	RATE ELEMENTS	Interim	Zone	BCS	USOC	RATES ($)					Svc Order Submitted Elec per LSR	Svc Order Submitted Manually per LSR	Attachment: 2 Incremental Charge - Manual Svc Order vs. Electronic-1st	Attachment: 2 Incremental Charge - Manual Svc Order vs. Electronic-Add'l	Exhibit: B Incremental Charge - Manual Svc Order vs. Electronic-Disc 1st	Exhibit: B Incremental Charge - Manual Svc Order vs. Electronic-Disc Add'l
						Rec	Nonrecurring		Nonrecurring Disconnect		OSS Rates($)					
							First	Add'l	First	Add'l	SOMEC	SOMAN	SOMAN	SOMAN	SOMAN	SOMAN
	Line Sharing - per Subsequent Activity per Line Rearrangement(BST Owned Splitter			ULS	ULSDS		35.42	16.57					26.94	12.76		
	Line Sharing - per Subsequent Activity per Line Rearrangement(DLEC Owned Splitter			ULS	ULSCS		35.14	16.29					26.94	12.76		
	Line Sharing - per Line Activation (DLEC owned Splitter)	I		ULS	ULSCC	0.61	47.44	19.31					26.94	12.76		
LINE SPLITTING																
END USER ORDERING-CENTRAL OFFICE BASED																
	Line Splitting - per line activation DLEC owned splitter	I		UEPSR UEPSB	UREOS	0.61										
	Line Splitting - per line activation BST owned - physical	I		UEPSR UEPSB	UREBP	0.61	56.92	28.59					26.94	12.76		
	Line Splitting - per line activation BST owned - virtual	I		UEPSR UEPSB	UREBV	0.61	56.92	28.59					26.94	12.76		
REMOTE SITE HIGH FREQUENCY SPECTRUM																
SPLITTERS-REMOTE SITE																
	Remote Site Line Share BellSouth Owned Splitter, 24 Port	I		ULS	ULSRB	54.47	113.79	0.00					26.94	12.76		
	Remote Site Line Share Cable Pair Activation CLEC Owned at RS and Deactivation	I		ULS	ULSTG		74.38	0.00					26.94	12.76		
END USER ORDERING-REMOTE SITE HIGH FREQUENCY SPECTRUM AKA REMOTE SITE LINE SHARING																
	Remote Site Line Share Line Activationfor End User Served at RS, BST Splitter	I		ULS	ULSRC	0.61	56.92	28.59					26.94	12.76		
	RS Line Share Line Activation for End User served at RS, CLEC Splitter	I		ULS	ULSTC	0.61	56.92	28.59					26.94	12.76		
	Remote Site Line Share Subsequent Activity-RS BST Owned Splitter	I		ULS	ULSRS		48.71	17.67					26.94	12.76		
	Remote Site Line Share Subsequent Activity-RS CLEC Owned Splitter	I		ULS	ULSTS		48.71	17.67					26.94	12.76		
UNBUNDLED DEDICATED TRANSPORT																
NOTE: INTEROFFICE CHANNEL DEDICATED TRANSPORT - minimum billing period - below DS3=one month, DS3/STS-1=four months																
INTEROFFICE CHANNEL - DEDICATED TRANSPORT																
	Interoffice Channel - Dedicated Transport - 2-Wire Voice Grade - Per Mile per month			U1TVX	1L5XX	0.0125										
	Interoffice Channel - Dedicated Transport- 2- Wire Voice Grade - Facility Termination			U1TVX	U1TV2	18.00	137.48	52.58					38.07	38.07		
	Interoffice Channel - Dedicated Transpor t- 2-Wire Voice Grade Rev Bat. - Per Mile per month			U1TVX	1L5XX	0.0125										
	Interoffice Channel - Dedicated Transport- 2- Wire VG Rev Bat. - Facility Termination			U1TVX	U1TR2	18.00	137.48	52.58					38.07	38.07		
	Interoffice Channel - Dedicated Transport - 4-Wire Voice Grade - Per Mile per month			U1TVX	1L5XX	0.0125										
	Interoffice Channel - Dedicated Transport - 4- Wire Voice Grade - Facility Termination			U1TVX	U1TV4	22.16	106.11	65.95					22.32	22.32		
	Interoffice Channel - Dedicated Transport - 56 kbps - per mile per month			U1TDX	1L5XX	0.0282										
	Interoffice Channel - Dedicated Transport - 56 kbps - Facility Termination			U1TDX	U1TD5	17.40	137.48	52.58					38.07	38.07		
	Interoffice Channel - Dedicated Transport - 64 kbps - per mile per month			U1TDX	1L5XX	0.0282										
	Interoffice Channel - Dedicated Transport - 64 kbps - Facility Termination			U1TDX	U1TD6	17.40	137.48	52.58					38.07	38.07		
	Interoffice Channel - Dedicated Channel - DS1 - Per Mile per month			U1TD1	1L5XX	0.5753										
	Interoffice Channel - Dedicated Tranport - DS1 - Facility Termination			U1TD1	U1TF1	71.29	217.17	163.75					38.07	38.07		
	Interoffice Channel - Dedicated Transport - DS3 - Per Mile per month			U1TD3	1L5XX	12.98										
	Interoffice Channel - Dedicated Transport - DS3 - Facility Termination per month			U1TD3	U1TF3	720.38	794.94	579.55					91.26	91.26		
	Interoffice Channel - Dedicated Transport - STS-1 - Per Mile per month			U1TS1	1L5XX	6.14										
	Interoffice Channel - Dedicated Transport - STS-1 - Facility Termination			U1TS1	U1TFS	790.37	642.23	408.89					53.48	53.48		

UNBUNDLED NETWORK ELEMENTS - North Carolina													Attachment: 2		Exhibit: B	
CATEGORY	RATE ELEMENTS	Interim	Zone	BCS	USOC	RATES ($)					Svc Order Submitted Elec per LSR	Svc Order Submitted Manually per LSR	Incremental Charge - Manual Svc Order vs. Electronic-1st	Incremental Charge - Manual Svc Order vs. Electronic-Add'l	Incremental Charge - Manual Svc Order vs. Electronic-Disc 1st	Incremental Charge - Manual Svc Order vs. Electronic-Disc Add'l
						Rec	Nonrecurring		Nonrecurring Disconnect		OSS Rates($)					
							First	Add'l	First	Add'l	SOMEC	SOMAN	SOMAN	SOMAN	SOMAN	SOMAN
	LOCAL CHANNEL - DEDICATED TRANSPORT															
	NOTE: LOCAL CHANNEL DEDICATED TRANSPORT - minimum billing period = below DS3=one month, DS3/STS-1=four months															
	Local Channel - Dedicated - 2-Wire Voice Grade - Zone 1		1	ULDVX	ULDV2	11.24	553.80	89.69					42.17	12.76		
	Local Channel - Dedicated - 2-Wire Voice Grade - Zone 2		2	ULDVX	ULDV2	19.91	553.80	89.69					42.17	12.76		
	Local Channel - Dedicated - 2-Wire Voice Grade - Zone 3		3	ULDVX	ULDV2	31.70	553.80	89.69					42.17	12.76		
	Local Channel - Dedicated - 4-Wire Voice Grade - Zone 1		1	ULDVX	ULDV4	12.03	562.23	92.67					42.17	12.76		
	Local Channel - Dedicated - 4-Wire Voice Grade - Zone 2		2	ULDVX	ULDV4	21.33	562.23	92.67					42.17	12.76		
	Local Channel - Dedicated - 4-Wire Voice Grade - Zone 3		3	ULDVX	ULDV4	33.95	562.23	92.67					42.17	12.76		
	Local Channel - Dedicated - DS1 - Zone 1		1	ULDD1	ULDF1	27.05	534.48	462.69					86.15	1.77		
	Local Channel - Dedicated - DS1 - Zone 2		2	ULDD1	ULDF1	47.94	534.48	462.69					86.15	1.77		
	Local Channel - Dedicated - DS1 - Zone 3		3	ULDD1	ULDF1	76.32	534.48	462.69					86.15	1.77		
	Local Channel - Dedicated - DS3 - Per Mile per month			ULDD3	1L5NC	0.9954										
	Local Channel - Dedicated - DS3 - Facility Termination			ULDD3	ULDF3	298.92	562.25	527.88					56.25	56.25		
	Local Channel - Dedicated - STS-1- Per Mile per month			ULDS1	1L5NC	0.9954										
	Local Channel - Dedicated - STS-1 - Facility Termination			ULDS1	ULDFS	286.13	1,071.00	646.12					53.48	53.48		
DARK FIBER																
	Dark Fiber, Four Fiber Strands, Per Route Mile or Fraction Thereof per month - Local Channel			UDF	1L5DC	64.04										
	NRC Dark Fiber - Local Channel			UDF	UDFC4		1,347.00	279.87								
	Dark Fiber, Four Fiber Strands, Per Route Mile or Fraction Thereof per month - Interoffice Channel			UDF	1L5DF	27.71										
	NRC Dark Fiber - Interoffice Channel			UDF	UDF14		1,807.00	562.96								
	Dark Fiber, Four Fiber Strands, Per Route Mile or Fraction Thereof per month - Local Loop			UDF	1L5DL	64.04										
	NRC Dark Fiber - Local Loop			UDF	UDFL4		1,347.00	279.87								
8XX ACCESS TEN DIGIT SCREENING																
	8XX Access Ten Digit Screening, Per Call			OHD		0.0005										
	8XX Access Ten Digit Screening, Reservation Charge Per 8XX Number Reserved			OHD	N8R1X		7.05	0.96					26.94			
	8XX Access Ten Digit Screening, Per 8XX No. Established W/O POTS Translations			OHD			23.82	2.73					41.35			
	8XX Access Ten Digit Screening, Per 8XX No. Established With POTS Translations			OHD	N8FTX		23.82	2.73					41.35			
	8XX Access Ten Digit Screening, Customized Area of Service Per 8XX Number			OHD	N8FCX		5.63	2.82								
	8XX Access Ten Digit Screening, Multiple InterLATA CXR Routing Per CXR Requested Per 8XX No.			OHD	N8FMX		6.59	3.77								
	8XX Access Ten Digit Screening, Change Charge Per Request			OHD	N8FAX		8.01	0.96					26.94			
	8XX Access Ten Digit Screening, Call Handling and Destination Features			OHD	N8FDX		5.63									
LINE INFORMATION DATA BASE ACCESS (LIDB)																
	LIDB Common Transport Per Query			OQT		0.00003										
	LIDB Validation Per Query			OQU		0.0134										
	LIDB Originating Point Code Establishment or Change			OQT, OQU	NRPBX		62.26						26.94	26.94		
SIGNALING (CCS7)																
	CCS7 Signaling Connection, Per link (A link)			UDB	TPP++	18.22	278.02	278.02					41.35	41.35		
	CCS7 Signaling Connection, Per link (B link) (also known as D link)			UDB	TPP++	18.22	278.02	278.02					41.35	41.35		
	CCS7 Signaling Termination, Per STP Port			UDB	PT8SX	132.83										
	CCS7 Signaling Usage, Per ISUP Message			UDB		0.00004										
	CCS7 Signaling Usage, Per TCAP Message			UDB		0.00009										
	CCS7 Signaling Usage Surrogate, per link per LATA			UDB	STU56	338.98										
	CCS7 Signaling Point Code, per Originating Point Code Establishment or Change, per STP affected			UDB	CCAPO		40.00	40.00					19.99	19.99		
	CCS7 Signaling Point Code, per Destination Point Code Establishment or Change, Per Stp Affected			UDB	CCAPD		8.00	8.00					19.99	19.99		
E911 SERVICE																
	Local Channel - Dedicated - 2-wr Voice Grade - Zone 1		1			11.24	553.80	89.69					42.17	12.76		
	Local Channel - Dedicated - 2-wr Voice Grade - Zone 2		2			19.91	553.80	89.69					42.17	12.76		

UNBUNDLED NETWORK ELEMENTS - North Carolina														Attachment: 2		Exhibit: B	
CATEGORY		RATE ELEMENTS	Interim	Zone	BCS	USOC	RATES ($)					Svc Order Submitted Elec per LSR	Svc Order Submitted Manually per LSR	Incremental Charge - Manual Svc Order vs. Electronic-1st	Incremental Charge - Manual Svc Order vs. Electronic-Add'l	Incremental Charge - Manual Svc Order vs. Electronic-Disc 1st	Incremental Charge - Manual Svc Order vs. Electronic-Disc Add'l
							Rec	Nonrecurring		Nonrecurring Disconnect		OSS Rates($)					
								First	Add'l	First	Add'l	SOMEC	SOMAN	SOMAN	SOMAN	SOMAN	SOMAN
		Local Channel - Dedicated - 2-wr Voice Grade - Zone 3		3			31.70	553.80	89.69					42.17	12.76		
		Interoffice Transport - Dedicated - 2-wr Voice Grade Per Mile					0.0282										
		Interoffice Transport - Dedicated - 2-wr Voice Grade Per Facility Termination					18.00	137.48	52.58					38.07	38.07		
		Local Channel - Dedicated - DS1 - Zone 1		1			27.05	534.48	462.69					86.15	1.77		
		Local Channel - Dedicated - DS1 - Zone 2		2			47.94	534.48	462.69					86.15	1.77		
		Local Channel - Dedicated - DS1 - Zone 3		3			76.32	534.48	462.69					86.15	1.77		
		Interoffice Transport - Dedicated - DS1 Per Mile					0.5753										
		Interoffice Transport - Dedicated - DS1 Per Facility Termination					71.29	217.17	163.75					38.07	38.07		
CALLING NAME (CNAM) SERVICE																	
		CNAM For DB Owners - Service Establishment			OQV			75.62									
		CNAM For Non DB Owners - Service Establishment			OQV			75.62									
		CNAM For DB Owners - Service Provisioning With Point Code Establishment (Initial)			OQV			2,354.00	2,354.00								
		CNAM For DB Owners - Service Provisioning With Point Code Establishment (Subsequent)			OQV			1,739.00	1,739.00								
		CNAM For Non DB Owners - Service Provisioning With Point Code Establishment (Initial)			OQV			1,072.00	1,072.00								
		CNAM For Non DB Owners - Service Provisioning With Point Code Establishment (Subsequent)			OQV			768.44	768.44								
		CNAM for DB & Non DB Owners, Per Query			OQV		0.0009592										
LNP Query Service																	
		LNP Charge Per query			OQV		0.00084										
		LNP Service Establishment Manual			OQV			41.25									
		LNP Service Provisioning with Point Code Establishment (Initial)			OQV			1,563.00	1,563.00								
		LNP Service Provisioning with Point Code Establishment (Subsequent)			OQV			883.99	883.99								
OPERATOR CALL PROCESSING																	
		Oper. Call Processing - Oper. Provided, Per Min. - Using BST LIDB					1.20										
		Oper. Call Processing - Oper. Provided, Per Min. - Using Foreign LIDB					1.24										
		Oper. Call Processing - Fully Automated, per Call - Using BST LIDB					0.20										
		Oper. Call Processing - Fully Automated, per Call - Using Foreign LIDB					0.20										
INWARD OPERATOR SERVICES																	
		Inward Operator Services - Verification, Per Minute					1.15										
		Inward Operator Services - Verification and Emergency Interrupt - Per Minute					1.15										
BRANDING - OPERATOR CALL PROCESSING																	
	Facility based CLEC																
		Recording of Custom Branded OA Announcement				CBAOS		7,000.00	7,000.00					26.94	12.76		
		Loading of Custom Branded OA Announcement per shelf/NAV per OCN				CBAOL		500.00	500.00					26.94	12.76		
	UNEP CLEC																
		Recording of Custom Branded OA Announcement						7,000.00	7,000.00					26.94	12.76		
		Loading of Custom Branded OA Announcement per shelf/NAV per OCN						500.00	500.00					26.94	12.76		
	Unbranding via OLNS for UNEP CLEC																
		Loading of OA per OCN (Regional)						1,200.00	1,200.00					26.94	12.76		
DIRECTORY ASSISTANCE SERVICES																	
	DIRECTORY ASSISTANCE ACCESS SERVICE																
		Directory Assistance Access Service Calls, Charge Per Call					0.275										
	DIRECTORY ASSISTANCE CALL COMPLETION ACCESS SERVICE (DACC)																
		Directory Assistance Call Completion Access Service (DACC), Per Call Attempt					0.062										

UNBUNDLED NETWORK ELEMENTS - North Carolina														Attachment: 2		Exhibit: B	
CATEGORY		RATE ELEMENTS	Interim	Zone	BCS	USOC	RATES ($)					Svc Order Submitted Elec per LSR	Svc Order Submitted Manually per LSR	Incremental Charge - Manual Svc Order vs. Electronic-1st	Incremental Charge - Manual Svc Order vs. Electronic-Add'l	Incremental Charge - Manual Svc Order vs. Electronic-Disc 1st	Incremental Charge - Manual Svc Order vs. Electronic-Disc Add'l
							Rec	Nonrecurring		Nonrecurring Disconnect		OSS Rates($)					
								First	Add'l	First	Add'l	SOMEC	SOMAN	SOMAN	SOMAN	SOMAN	SOMAN
DIRECTORY ASSISTANCE SERVICES																	
	DIRECTORY ASSISTANCE DATA BASE SERVICE (DADS)																
		Directory Assistance Data Base Service Charge Per Listing					0.04										
		Directory Assistance Data Base Service, per month				DBSOF	150.00										
BRANDING - DIRECTORY ASSISTANCE																	
	Facility Based CLEC																
		Recording and Provisioning of DA Custom Branded Announcement			AMT	CBADA		3,000.00	3,000.00					26.94	12.76		
		Loading of Custom Branded Announcement per Switch per OCN			AMT	CBADC		1,170.00	1,170.00					26.94	12.76		
	UNEP CLEC																
		Recording of DA Custom Branded Announcement						3,000.00	3,000.00					26.94	12.76		
		Loading of DA Custom Branded Announcement per Switch per OCN						1,170.00	1,170.00					26.94	12.76		
	Unbranding via OLNS for UNEP CLEC																
		Loading of DA per OCN (1 OCN per Order)						420.00	420.00					26.94	12.76		
		Loading of DA per Switch per OCN						16.00	16.00					26.94	12.76		
SELECTIVE ROUTING																	
		Selective Routing Per Unique Line Class Code Per Request Per Switch				USRCR		82.25	82.25	14.14	14.14			26.94	12.76		
VIRTUAL COLLOCATION																	
		Virtual Collocation-2 Wire Cross Connects (Loop) for Line Splitting			UEPSR, UEPSB	VE1LS	0.0287	33.96	32.08	36.72	34.84			19.99	19.99		
PHYSICAL COLLOCATION																	
		Physical Collocation-2 Wire Cross Connects (Loop) for Line Splitting			UEPSR, UEPSB	PE1LS	0.0309	33.53	31.65	36.29	34.41			19.99	19.99		
AIN SELECTIVE CARRIER ROUTING																	
		Regional Service Establishment			SRC	SRCEC		215,597.00									
		End Office Establishment			SRC	SRCEO		347.27									
		Query NRC, per query			SRC		0.0053758										
AIN - BELLSOUTH AIN SMS ACCESS SERVICE																	
		AIN SMS Access Service - Service Establishment, Per State, Initial Setup			A1N	CAMSE		294.77									
		AIN SMS Access Service - Port Connection - Dial/Shared Access			A1N	CAMDP		86.94									
		AIN SMS Access Service - Port Connection - ISDN Access			A1N	CAM1P		86.94									
		AIN SMS Access Service - User Identification Codes - Per User ID Code			A1N	CAMAU		200.83									
		AIN SMS Access Service - Security Card, Per User ID Code, Initial or Replacement			A1N	CAMRC		172.05									
		AIN SMS Access Service - Storage, Per Unit (100 Kilobytes)					0.0023										
		AIN SMS Access Service - Session, Per Minute					0.0791										
		AIN SMS Access Service - Company Performed Session, Per Minute					2.08										
AIN - BELLSOUTH AIN TOOLKIT SERVICE																	
		AIN Toolkit Service - Service Establishment Charge, Per State, Initial Setup			CAM	BAPSC		290.05									
		AIN Toolkit Service - Training Session, Per Customer				BAPVX		8,363.00									
		AIN Toolkit Service - Trigger Access Charge, Per Trigger, Per DN, Term. Attempt				BAPTT		72.76									
		AIN Toolkit Service - Trigger Access Charge, Per Trigger, Per DN, Off-Hook Delay				BAPTD		72.76									
		AIN Toolkit Service - Trigger Access Charge, Per Trigger, Per DN, Off-Hook Immediate				BAPTM		72.76									
		AIN Toolkit Service - Trigger Access Charge, Per Trigger, Per DN, 10-Digit PODP				BAPTO		149.95									
		AIN Toolkit Service - Trigger Access Charge, Per Trigger, Per DN, CDP				BAPTC		149.95									

UNBUNDLED NETWORK ELEMENTS - North Carolina														Attachment: 2		Exhibit: B	
CATEGORY		RATE ELEMENTS	Interim	Zone	BCS	USOC	RATES ($)					Svc Order Submitted Elec per LSR	Svc Order Submitted Manually per LSR	Incremental Charge - Manual Svc Order vs. Electronic-1st	Incremental Charge - Manual Svc Order vs. Electronic-Add'l	Incremental Charge - Manual Svc Order vs. Electronic-Disc 1st	Incremental Charge - Manual Svc Order vs. Electronic-Disc Add'l
							Rec	Nonrecurring		Nonrecurring Disconnect		OSS Rates($)					
								First	Add'l	First	Add'l	SOMEC	SOMAN	SOMAN	SOMAN	SOMAN	SOMAN
		AIN Toolkit Service - Trigger Access Charge, Per Trigger, Per DN, Feature Code				BAPTF		149.95									
		AIN Toolkit Service - Query Charge, Per Query					0.02										
		AIN Toolkit Service - Type 1 Node Charge, Per AIN Toolkit Subscription, Per Node, Per Query					0.005										
		AIN Toolkit Service - SCP Storage Charge, Per SMS Access Account, Per 100 Kilobytes					1.45										
		AIN Toolkit Service - Monthly report - Per AIN Toolkit Service Subscription			CAM	BAPMS	15.98	71.80									
		AIN Toolkit Service - Special Study - Per AIN Toolkit Service Subscription			CAM	BAPLS	0.08	47.20									
		AIN Toolkit Service - Call Event Report - Per AIN Toolkit Service Subscription			CAM	BAPDS	15.90	71.80									
		AIN Toolkit Service - Call Event Special Study - Per AIN Toolkit Service Subscription			CAM	BAPES	0.003	47.20									
ENHANCED EXTENDED LINK (EELs)																	
	NOTE: The monthly recurring and non-recurring charges below will apply and the Switch-As-Is Charge will not apply for EELs provisioned as ' Ordinarily Combined' Network Elements.																
	NOTE: The monthly recurring and the Switch-As-Is Charge and not the non-recurring charges below will apply for EELs provisioned as ' Currently Combined' Network Elements.																
	NOTE: Minimum billing is one month for DS1 and below and three months above DS1 services.																
	2-WIRE VOICE GRADE EXTENDED LOOP WITH DEDICATED DS1 INTEROFFICE TRANSPORT (EEL)																
		First 2-Wire VG Loop(SL2) in a DS1 Interofficed Transport Combination - Zone 1		1	UNCVX	UEAL2	14.97	142.97	106.56								
		First 2-Wire VG Grade Loop(SL2) in a DS1 Interofficed Transport Combination - Zone 2		2	UNCVX	UEAL2	25.93	142.97	106.56								
		First 2-Wire VG Grade Loop(SL2) in a DS1 Interofficed Transport Combination - Zone 3		3	UNCVX	UEAL2	40.81	142.97	106.56								
		Interoffice Transport - Dedicated - DS1 combination - Per Mile per month			UNC1X	1L5XX	0.5753										
		Interoffice Transport - Dedicated - DS1 combination - Facility Termination per month			UNC1X	U1TF1	71.29	217.17	163.75					38.07	38.07		
		DS1 Channelization System Per Month			UNC1X	MQ1	146.69	197.78	140.06					38.07	38.07		
		Voice Grade COCI - DS1 To Ds0 Interface - Per Month			UNCVX	1D1VG	1.27	13.09	9.38					38.07	38.07		
		Each Additional 2-Wire VG Loop(SL 2) in the same DS1 Interoffice Transport Combination - Zone 1		1	UNCVX	UEAL2	14.97	142.97	106.56								
		Each Additional 2-Wire VG Loop(SL2) in the same DS1 Interoffice Transport Combination - Zone 2		2	UNCVX	UEAL2	25.93	142.97	106.56								
		Each Additional 2-Wire VG Loop(SL2) in the same DS1 Interoffice Transport Combination - Zone 3		3	UNCVX	UEAL2	40.81	142.97	106.56								
		Voice Grade COCI - DS1 to DS0 Channel System combination - per month			UNCVX	1D1VG	1.27	13.09	9.38					38.07	38.07		
		Nonrecurring Currently Combined Network Elements Switch -As-Is Charge			UNC1X	UNCCC		21.75	21.75	32.28	10.96			38.07	38.07		
	4-WIRE VOICE GRADE EXTENDED LOOP WITH DEDICATED DS1 INTEROFFICE TRANSPORT (EEL)																
		First 4-Wire Analog Voice Grade Loop in a DS1 Interoffice Transport Combination - Zone 1		1	UNCVX	UEAL4	21.32	288.47	237.45								
		First 4-Wire Analog Voice Grade Loop in a DS1 Interoffice Transport Combination - Zone 2		2	UNCVX	UEAL4	36.27	288.47	237.45								
		First 4-Wire Analog Voice Grade Loop in a DS1 Interoffice Transport Combination - Zone 3		3	UNCVX	UEAL4	56.57	288.47	237.45								
		Interoffice Transport - Dedicated - DS1 combination - Per Mile Per Month			UNC1X	1L5XX	0.5753										
		Interoffice Transport - Dedicated - DS1 - Facility Termination Per Month			UNC1X	U1TF1	71.29	217.17	163.75					38.07	38.07		
		Channelization - Channel System DS1 to DS0 combination Per Month			UNC1X	MQ1	146.69	197.78	140.06					38.07	38.07		
		Voice Grade COCI - DS1 to DS0 Channel System combination - per month			UNCVX	1D1VG	1.27	13.09	9.38					38.07	38.07		
		Additional 4-Wire Analog Voice Grade Loop in same DS1 Interoffice Transport Combination - Zone 1		1	UNCVX	UEAL4	21.32	288.47	237.45								

CATEGORY	RATE ELEMENTS	Interim	Zone	BCS	USOC	RATES ($)					Svc Order Submitted Elec per LSR	Svc Order Submitted Manually per LSR	Attachment: 2 Incremental Charge - Manual Svc Order vs. Electronic-1st	Attachment: 2 Incremental Charge - Manual Svc Order vs. Electronic-Add'l	Exhibit: B Incremental Charge - Manual Svc Order vs. Electronic-Disc 1st	Exhibit: B Incremental Charge - Manual Svc Order vs. Electronic-Disc Add'l
						Rec	Nonrecurring		Nonrecurring Disconnect		OSS Rates($)					
							First	Add'l	First	Add'l	SOMEC	SOMAN	SOMAN	SOMAN	SOMAN	SOMAN
	Additional 4-Wire Analog Voice Grade Loop in same DS1 Interoffice Transport Combination - Zone 2		2	UNCVX	UEAL4	36.27	288.47	237.45								
	Additional 4-Wire Analog Voice Grade Loop in same DS1 Interoffice Transport Combination - Zone 3		3	UNCVX	UEAL4	56.57	288.47	237.45								
	Voice Grade COCI - DS1 to DS0 Channel System combination - per month			UNCVX	1D1VG	1.27	13.09	9.38					38.07	38.07		
	Nonrecurring Currently Combined Network Elements Switch -As-Is Charge			UNC1X	UNCCC		21.75	21.75	32.28	10.96			38.07	38.07		
	4-WIRE 56 KBPS EXTENDED DIGITAL LOOP WITH DEDICATED DS1 INTEROFFICE TRANSPORT (EEL)															
	First 4-Wire 56Kbps Digital Grade Loop in a DS1 Interoffice Transport Combination - Zone 1		1	UNCDX	UDL56	25.32	489.04	337.51								
	First 4-wire 56Kbps Digital Grade Loop in a DS1 Interoffice Transport Combination - Zone 2		2	UNCDX	UDL56	43.11	489.04	337.51								
	First 4-Wire 56Kbps Digital Grade Loop in a DS1 Interoffice Transport Combination - Zone 3		3	UNCDX	UDL56	67.26	489.04	337.51								
	Interoffice Transport - Dedicated - DS1 combination - Per Mile Per Month			UNC1X	1L5XX	0.5753										
	Interoffice Transport - Dedicated - DS1 - combination Facility Termination Per Month			UNC1X	U1TF1	71.29	217.17	163.75					38.07	38.07		
	Channelization - Channel System DS1 to DS0 combination Per Month			UNC1X	MQ1	146.69	197.78	140.06					38.07	38.07		
	OCU-DP COCI (data) - DS1 to DS0 Channel System - per month (2.4-64kbs)			UNCDX	1D1DD	2.00	15.76	11.28					38.07	38.07		
	Additional 4-Wire 56Kbps Digital Grade Loopin same DS1 Interoffice Transport Combination - Zone 1		1	UNCDX	UDL56	25.32	489.04	337.51								
	Additional 4-Wire 56Kbps Digital Grade Loopin same DS1 Interoffice Transport Combination - Zone 2		2	UNCDX	UDL56	43.11	489.04	337.51								
	Additional 4-Wire 56Kbps Digital Grade Loopin same DS1 Interoffice Transport Combination - Zone 3		3	UNCDX	UDL56	67.26	489.04	337.51								
	OCU-DP COCI (data) - DS1 to DS0 Channel System - combination per month (2.4-64kbs)			UNCDX	1D1DD	2.00	15.76	11.28					38.07	38.07		
	Nonrecurring Currently Combined Network Elements Switch -As-Is Charge			UNC1X	UNCCC		21.75	21.75	32.28	10.96			38.07	38.07		
	4-WIRE 64 KBPS EXTENDED DIGITAL LOOP WITH DEDICATED DS1 INTEROFFICE TRANSPORT (EEL)															
	First 4-Wire 64Kbps Digital Grade Loop in a DS1 Interoffice Transport Combination - Zone 1		1	UNCDX	UDL64	25.32	489.04	337.51								
	First 4-Wire 64Kbps Digital Grade Loop in a DS1 Interoffice Transport Combination - Zone 2		2	UNCDX	UDL64	43.11	489.04	337.51								
	First 4-Wire 64Kbps Digital Grade Loop in a DS1 Interoffice Transport Combination - Zone 3		3	UNCDX	UDL64	67.26	489.04	337.51								
	Interoffice Transport - Dedicated - DS1 combination - Per Mile Per Month			UNC1X	1L5XX	0.5753										
	Interoffice Transport - Dedicated - DS1 combination - Facility Termination Per Month			UNC1X	U1TF1	71.29	217.17	163.75					38.07	38.07		
	Channelization - Channel System DS1 to DS0 combination Per Month			UNC1X	MQ1	146.69	197.78	140.06					38.07	38.07		
	OCU-DP COCI (data) - DS1 to DS0 Channel System combination - per month (2.4-64kbs)			UNCDX	1D1DD	2.00	15.76	11.28					38.07	38.07		
	Additional 4-Wire 64Kbps Digital Grade Loopin same DS1 Interoffice Transport Combination - Zone 1		1	UNCDX	UDL64	25.32	489.04	337.51								
	Additional 4-Wire 64Kbps Digital Grade Loopin same DS1 Interoffice Transport Combination - Zone 2		2	UNCDX	UDL64	43.11	489.04	337.51								
	Additional 4-Wire 64Kbps Digital Grade Loopin same DS1 Interoffice Transport Combination - Zone 3		3	UNCDX	UDL64	67.26	489.04	337.51								
	OCU-DP COCI (data) - DS1 to DS0 Channel System combination - per month (2.4-64kbs)			UNCDX	1D1DD	2.00	15.76	11.28					38.07	38.07		
	Nonrecurring Currently Combined Network Elements Switch -As-Is Charge			UNC1X	UNCCC		21.75	21.75	32.28	10.96			38.07	38.07		
	4-WIRE DS1 DIGITAL EXTENDED LOOP WITH DEDICATED DS1 INTEROFFICE TRANSPORT (EEL)															

UNBUNDLED NETWORK ELEMENTS - North Carolina														Attachment: 2		Exhibit: B	
CATEGORY		RATE ELEMENTS	Interim	Zone	BCS	USOC	RATES ($)					Svc Order Submitted Elec per LSR	Svc Order Submitted Manually per LSR	Incremental Charge - Manual Svc Order vs. Electronic-1st	Incremental Charge - Manual Svc Order vs. Electronic-Add'l	Incremental Charge - Manual Svc Order vs. Electronic-Disc 1st	Incremental Charge - Manual Svc Order vs. Electronic-Disc Add'l
							Rec	Nonrecurring		Nonrecurring Disconnect		OSS Rates($)					
								First	Add'l	First	Add'l	SOMEC	SOMAN	SOMAN	SOMAN	SOMAN	SOMAN
		4-Wire DS1 Digital Loop in Combination with DS1 Interoffice Transport - Zone 1		1	UNC1X	USLXX	47.60	714.84	421.47								
		4-Wire DS1 Digital Loop in Combination with DS1 Interoffice Transport - Zone 2		2	UNC1X	USLXX	84.36	714.84	421.47								
		4-Wire DS1 Digital Loop in Combination with DS1 Interoffice Transport - Zone 3		3	UNC1X	USLXX	134.29	714.84	421.47								
		Interoffice Transport - Dedicated - DS1 combination - Per Mile Per Month			UNC1X	1L5XX	0.5753										
		Interoffice Transport - Dedicated - DS1 combination - Facility Termination Per Month			UNC1X	U1TF1	71.29	217.17	163.75					38.07	38.07		
		Nonrecurring Currently Combined Network Elements Switch -As-Is Charge			UNC1X	UNCCC		21.75	21.75	32.28	10.96			38.07	38.07		
	4-WIRE DS1 DIGITAL EXTENDED LOOP WITH DEDICATED DS3 INTEROFFICE TRANSPORT (EEL)																
		First DS1Loop in DS3 Interoffice Transport Combination - Zone 1		1	UNC1X	USLXX	47.60	714.84	421.47								
		First DS1Loop in DS3 Interoffice Transport Combination - Zone 2		2	UNC1X	USLXX	84.36	714.84	421.47								
		First DS1Loop in DS3 Interoffice Transport Combination - Zone 3		3	UNC1X	USLXX	134.29	714.84	421.47								
		Interoffice Transport - Dedicated - DS3 combination - Per Mile Per Month			UNC3X	1L5XX	12.98										
		Interoffice Transport - Dedicated - DS3 - Facility Termination per month			UNC3X	U1TF3	720.38	794.94	579.55					38.07	38.07		
		DS3 to DS1 Channel System combination per month			UNC3X	MQ3	233.10	403.97	234.40					38.07	38.07		
		DS3 Interface Unit (DS1 COCI) combination per month			UNC1X	UC1D1	16.07	13.09	9.38					38.07	38.07		
		Additional DS1Loop in DS3 Interoffice Transport Combination - Zone 1		1	UNC1X	USLXX	47.60	714.84	421.47								
		Additional DS1Loop in DS3 Interoffice Transport Combination - Zone 2		2	UNC1X	USLXX	84.36	714.84	421.47								
		Additional DS1Loop in DS3 Interoffice Transport Combination - Zone 3		3	UNC1X	USLXX	134.29	714.84	421.47								
		DS3 Interface Unit (DS1 COCI) combination per month			UNC1X	UC1D1	16.07	13.09	9.38					38.07	38.07		
		Nonrecurring Currently Combined Network Elements Switch -As-Is Charge			UNC3X	UNCCC		21.75	21.75	32.28	10.96			38.07	38.07		
	2-WIRE VOICE GRADE EXTENDED LOOP/ 2 WIRE VOICE GRADE INTEROFFICE TRANSPORT (EEL)																
		2-WireVG Loop used with 2-wire VG Interoffice Transport Combination - Zone 1		1	UNCVX	UEAL2	14.97	142.97	106.56								
		2-WireVG Loop used with 2-wire VG Interoffice Transport Combination - Zone 2		2	UNCVX	UEAL2	25.93	142.97	106.56								
		2-WireVG Loop used with 2-wire VG Interoffice Transport Combination - Zone 3		3	UNCVX	UEAL2	40.81	142.97	106.56								
		Interoffice Transport - Dedicated - 2-wire VG combination - Per Mile Per Month			UNCVX	1L5XX	0.0282										
		Interoffice Transport - Dedicated - 2- Wire Voice Grade combination - Facility Termination per month			UNCVX	U1TV2	18.00	137.48	52.58					38.07	38.07		
		Nonrecurring Currently Combined Network Elements Switch -As-Is Charge			UNCVX	UNCCC		21.75	21.75	32.28	10.96			38.07	38.07		
	4-WIRE VOICE GRADE EXTENDED LOOP/ 4 WIRE VOICE GRADE INTEROFFICE TRANSPORT (EEL)																
		4-WireVG Loop used with 4-wire VG Interoffice Transport Combination - Zone 1		1	UNCVX	UEAL4	21.32	288.47	237.45								
		4-WireVG Loop used with 4-wire VG Interoffice Transport Combination - Zone 2		2	UNCVX	UEAL4	36.27	288.47	237.45								
		4-WireVG Loop used with 4-wire VG Interoffice Transport Combination - Zone 3		3	UNCVX	UEAL4	56.57	288.47	237.45								
		Interoffice Transport - Dedicated - 4-wire VG combination - Per Mile Per Month			UNCVX	1L5XX	0.0282										
		Interoffice Transport - Dedicated - 4- Wire Voice Grade combination - Facility Termination per month			UNCVX	U1TV4	22.16	106.11	65.95					38.07	38.07		

UNBUNDLED NETWORK ELEMENTS - North Carolina														Attachment: 2		Exhibit: B	
CATEGORY		RATE ELEMENTS	Interim	Zone	BCS	USOC	RATES ($)					Svc Order Submitted Elec per LSR	Svc Order Submitted Manually per LSR	Incremental Charge - Manual Svc Order vs. Electronic-1st	Incremental Charge - Manual Svc Order vs. Electronic-Add'l	Incremental Charge - Manual Svc Order vs. Electronic-Disc 1st	Incremental Charge - Manual Svc Order vs. Electronic-Disc Add'l
							Rec	Nonrecurring		Nonrecurring Disconnect		OSS Rates($)					
								First	Add'l	First	Add'l	SOMEC	SOMAN	SOMAN	SOMAN	SOMAN	SOMAN
		Nonrecurring Currently Combined Network Elements Switch -As-Is Charge			UNCVX	UNCCC		21.75	21.75	32.28	10.96			38.07	38.07		
	DS3 DIGITAL EXTENDED LOOP WITH DEDICATED DS3 INTEROFFICE TRANSPORT (EEL)																
		High Capacity Unbundled Local Loop - DS3 combination - Per Mile per month			UNC3X	1L5ND	13.33										
		High Capacity Unbundled Local Loop - DS3 combination - Facility Termination per month			UNC3X	UE3PX	450.69	1,071.00	646.12					38.07	38.07		
		Interoffice Transport - Dedicated - DS3 - Per Mile per month			UNC3X	1L5XX	12.98										
		Interoffice Transport - Dedicated - DS3 combination - Facility Termination per per month			UNC3X	U1TF3	720.38	794.94	579.55					38.07	38.07		
		Nonrecurring Currently Combined Network Elements Switch -As-Is Charge			UNC3X	UNCCC		21.75	21.75	32.28	10.96			38.07	38.07		
	STS1 DIGITAL EXTENDED LOOP WITH DEDICATED STS1 INTEROFFICE TRANSPORT (EEL)																
		High Capacity Unbundled Local Loop - STS1 combination - Per Mile per month			UNCSX	1L5ND	13.33										
		High Capacity Unbundled Local Loop - STS1 combination - Facility Termination per month			UNCSX	UDLS1	464.26	1,071.00	646.12					38.07	38.07		
		Interoffice Transport - Dedicated - STS1 combination - Per Mile per month			UNCSX	1L5XX	6.14										
		Interoffice Transport - Dedicated - STS1 combination - Facility Termination per month			UNCSX	U1TFS	790.37	642.23	408.89					38.07	38.07		
		Nonrecurring Currently Combined Network Elements Switch -As-Is Charge			UNCSX	UNCCC		21.75	21.75	32.28	10.96			38.07	38.07		
	2-WIRE ISDN EXTENDED LOOP WITH DS1 INTEROFFICE TRANSPORT (EEL)																
		First 2-Wire ISDN Loop in a DS1 Interoffice Combination Transport - Zone 1		1	UNCNX	U1L2X	19.42	325.91	251.31								
		First 2-Wire ISDN Loop in a DS1 Interoffice Combination Transport - Zone 2		2	UNCNX	U1L2X	32.88	325.91	251.31								
		First 2-Wire ISDN Loop in a DS1 Interoffice Combination Transport - Zone 3		3	UNCNX	U1L2X	51.14	325.91	251.31								
		Interoffice Transport - Dedicated - DS1 combination - Per Mile			UNC1X	1L5XX	0.5753										
		Interoffice Transport - Dedicated - DS1 combintion - Facility Termination per month			UNC1X	U1TF1	71.29	217.17	163.75					38.07	38.07		
		Channelization - Channel System DS1 to DS0 combination - per month			UNC1X	MQ1	146.69	197.78	140.06					38.07	38.07		
		2-wire ISDN COCI (BRITE) - DS1 to DS0 Channel System combination - per month			UNCNX	UC1CA	3.59	15.76	11.28					38.07	38.07		
		Additional 2-wire ISDN Loop in same DS1Interoffice Transport Combination - Zone 1		1	UNCNX	U1L2X	19.42	325.91	251.31								
		Additional 2-wire ISDN Loop in same DS1Interoffice Transport Combination - Zone 2		2	UNCNX	U1L2X	32.88	325.91	251.31								
		Additional 2-wire ISDN Loop in same DS1Interoffice Transport Combination - Zone 3		3	UNCNX	U1L2X	51.14	325.91	251.31								
		2-wire ISDN COCI (BRITE) - DS1 to DS0 Channel System combintaion- per month			UNCNX	UC1CA	3.59	15.76	11.28					38.07	38.07		
		Nonrecurring Currently Combined Network Elements Switch -As-Is Charge			UNC1X	UNCCC		21.75	21.75	32.28	10.96			38.07	38.07		
	4-WIRE DS1 DIGITAL EXTENDED LOOP WITH DEDICATED STS-1 INTEROFFICE TRANSPORT (EEL)																
		First DS1 Loop in STS1 Interoffice Transport Combination - Zone 1		1	UNC1X	USLXX	47.60	714.84	421.47								
		First DS1 Loop in STS1 Interoffice Transport Combination - Zone 2		2	UNC1X	USLXX	84.36	714.84	421.47								
		First DS1 Loop in STS1 Interoffice Transport Combination - Zone 3		3	UNC1X	USLXX	134.29	714.84	421.47								
		Interoffice Transport - Dedicated - STS1 combination - Per Mile Per Month			UNCSX	1L5XX	6.14										
		Interoffice Transport - Dedicated - STS1 combination - Facility Termination			UNCSX	U1TFS	790.37	642.23	408.89					38.07	38.07		
		STS1 to DS1 Channel System conbination per month			UNCSX	MQ3	233.10	403.97	234.40					38.07	38.07		

CATEGORY	RATE ELEMENTS	Interim	Zone	BCS	USOC	RATES ($)					Svc Order Submitted Elec per LSR	Svc Order Submitted Manually per LSR	Attachment: 2 Incremental Charge - Manual Svc Order vs. Electronic-1st	Attachment: 2 Incremental Charge - Manual Svc Order vs. Electronic-Add'l	Exhibit: B Incremental Charge - Manual Svc Order vs. Electronic-Disc 1st	Exhibit: B Incremental Charge - Manual Svc Order vs. Electronic-Disc Add'l
						Rec	Nonrecurring		Nonrecurring Disconnect		OSS Rates($)					
							First	Add'l	First	Add'l	SOMEC	SOMAN	SOMAN	SOMAN	SOMAN	SOMAN
	DS3 Interface Unit (DS1 COCI) combination per month			UNC1X	UC1D1	16.07	13.09	9.38					38.07	38.07		
	Additional DS1Loop in STS1 Interoffice Transport Combination - Zone 1		1	UNC1X	USLXX	47.60	714.84	421.47								
	Additional DS1Loop in STS1 Interoffice Transport Combination - Zone 2		2	UNC1X	USLXX	84.36	714.84	421.47								
	Additional DS1Loop in STS1 Interoffice Transport Combination - Zone 3		3	UNC1X	USLXX	134.29	714.84	421.47								
	DS3 Interface Unit (DS1 COCI) combination per month			UNC1X	UC1D1	16.07	13.09	9.38					38.07	38.07		
	Nonrecurring Currently Combined Network Elements Switch -As-Is Charge			UNCSX	UNCCC		21.75	21.75	32.28	10.96			38.07	38.07		
4-WIRE 56 KBPS DIGITAL EXTENDED LOOP WITH 56 KBPS INTEROFFICE TRANSPORT (EEL)																
	4-wire 56 kbps Loop/4-wire 56 kbps Interoffice Transport Combination - Zone 1		1	UNCDX	UDL56	25.32	489.04	337.51								
	4-wire 56 kbps Loop/4-wire 56 kbps Interoffice Transport Combination - Zone 2		2	UNCDX	UDL56	43.11	489.04	337.51								
	4-wire 56 kbps Loop/4-wire 56 kbps Interoffice Transport Combination - Zone 3		3	UNCDX	UDL56	67.26	489.04	337.51								
	Interoffice Transport - Dedicated - 4-wire 56 kbps combination - Per Mile			UNCDX	1L5XX	0.0282										
	Interoffice Transport - Dedicated - 4-wire 56 kbps combination - Facility Termination			UNCDX	U1TD5	17.40	137.48	52.58					38.07	38.07		
	Nonrecurring Currently Combined Network Elements Switch -As-Is Charge			UNCDX	UNCCC		21.75	21.75	32.28	10.96			38.07	38.07		
4-WIRE 64 KBPS DIGITAL EXTENDED LOOP WITH 64 KBPS INTEROFFICE TRANSPORT (EEL)																
	4-wire 64 kbps Loop/4-wire 64 kbps Interoffice Transport Combination - Zone 1		1	UNCDX	UDL64	25.32	489.04	337.51								
	4-wire 64 kbps Loop/4-wire 64 kbps Interoffice Transport Combination - Zone 2		2	UNCDX	UDL64	43.11	489.04	337.51								
	4-wire 64 kbps Loop/4-wire 64 kbps Interoffice Transport Combination - Zone 3		3	UNCDX	UDL64	67.26	489.04	337.51								
	Interoffice Transport - Dedicated - 4-wire 64 kbps combination - Per Mile			UNCDX	1L5XX	0.0282										
	Interoffice Transport - Dedicated - 4-wire 64 kbps combination - Facility Termination			UNCDX	U1TD6	17.40	137.48	52.58					38.07	38.07		
	Nonrecurring Currently Combined Network Elements Switch -As-Is Charge			UNCDX	UNCCC		21.75	21.75	32.28	10.96			38.07	38.07		
ADDITIONAL NETWORK ELEMENTS																
When used as a part of a currently combined facility, the non-recurrng charges do not apply, but a Switch As Is charge does apply.																
When used as ordinarily combined network elements in All States, the non-recurring charges apply and the Switch As Is Charge does not.																
Nonrecurring Currently Combined Network Elements "Switch As Is" Charge (One applies to each combination)																
	Nonrecurring Currently Combined Network Elements Switch -As-Is Charge - 2 wire/4-Wire VG			UNCVX	UNCCC		21.75	21.75	32.28	10.96			38.07	38.07		
	Nonrecurring Currently Combined Network Elements Switch -As-Is Charge - 56/64 kbps			UNCDX	UNCCC		21.75	21.75	32.28	10.96			38.07	38.07		
	Nonrecurring Currently Combined Network Elements Switch -As-Is Charge - DS1			UNC1X	UNCCC		21.75	21.75	32.28	10.96			38.07	38.07		
	Nonrecurring Currently Combined Network Elements Switch -As-Is Charge - DS3			UNC3X	UNCCC		21.75	21.75	32.28	10.96			38.07	38.07		
	Nonrecurring Currently Combined Network Elements Switch -As-Is Charge - STS1			UNCSX	UNCCC		21.75	21.75	32.28	10.96			38.07	38.07		
NOTE: Local Channel - Dedicated Transport - minimum billing period - Below DS3=one month, DS3 and above=four months																
	Local Channel - Dedicated - 2-Wire Voice Grade Zone 1		1	UNCVX	ULDV2	11.24	553.80	89.69								
	Local Channel - Dedicated - 2-Wire Voice Grade Zone 2		2	UNCVX	ULDV2	19.91	553.80	89.69								
	Local Channel - Dedicated - 2-Wire Voice Grade - Zone 3		3	UNCVX	ULDV2	31.70	553.80	89.69								
	Local Channel - Dedicated - 4-Wire Voice Grade Zone 1		1	UNCVX	ULDV4	12.03	562.23	92.67								
	Local Channel - Dedicated - 4-Wire Voice Grade Zone 2		2	UNCVX	ULDV4	21.33	562.23	92.67								
	Local Channel - Dedicated - 4-Wire Voice Grade - Zone 3		3	UNCVX	ULDV4	33.95	562.23	92.67								
	Local Channel - Dedicated - DS1 per month Zone 1		1	UNC1X	ULDF1	27.05	534.48	462.69								
	Local Channel - Dedicated -DS1 Per Month Zone 2		2	UNC1X	ULDF1	47.94	534.48	462.69								

UNBUNDLED NETWORK ELEMENTS - North Carolina														Attachment: 2		Exhibit: B	
CATEGORY		RATE ELEMENTS	Interim	Zone	BCS	USOC	RATES ($)					Svc Order Submitted Elec per LSR	Svc Order Submitted Manually per LSR	Incremental Charge - Manual Svc Order vs. Electronic-1st	Incremental Charge - Manual Svc Order vs. Electronic-Add'l	Incremental Charge - Manual Svc Order vs. Electronic-Disc 1st	Incremental Charge - Manual Svc Order vs. Electronic-Disc Add'l
							Rec	Nonrecurring		Nonrecurring Disconnect		OSS Rates($)					
								First	Add'l	First	Add'l	SOMEC	SOMAN	SOMAN	SOMAN	SOMAN	SOMAN
		Local Channel - Dedicated - DS1- Per Month Zone 3		3	UNC1X	ULDF1	76.32	534.48	462.69								
		Local Channel - Dedicated - DS3 - Per Mile per month			UNC3X	1L5NC	0.9954										
		Local Channel - Dedicated - DS3 - Facility Termination			UNC3X	ULDF3	298.92	562.25	527.88								
		Local Channel - Dedicated - STS-1- Per Mile per month			UNCSX	1L5NC	0.9954										
		Local Channel - Dedicated - STS-1 - Facility Termination			UNCSX	ULDFS	286.13	1,071.00	646.12								
	Optional Features & Functions:																
		Clear Channel Capability (SF/ESF) Option - Subsequent Activity - per DS1	I		ULDD1, U1TD1, UNC1X, USL	NRCCC		65.07						26.94	12.76		
		C-bit Parity Option - Subsequent Activity - per DS3	i		U1TD3, ULDD3, UE3, UNC3X	NRCC3		50.07						26.94	12.76		
	MULTIPLEXERS																
	NOTE: minimum billing period is one month for DS1 to DS0 Channel System and interfaces																
	NOTE: minimum billing period is three months for DS3 to DS1 Channel System and interfaces																
		DS1 to DS0 Channel System (with the higher-level connected to a collocation in the same SWC) per month			UXTD1	MQ1	146.69	197.78	140.06					24.85	8.16		
		DS1 to DS0 Channel System (used to channelize a DS1 Local Channel) per month			ULDD1	MQ1	146.69	197.78	140.06					24.85	8.16		
		DS1 to DS0 Channel System (used to channelize a DS1 Interoffice Channel) per month			U1TD1	MQ1	146.69	197.78	140.06					24.85	8.16		
		OCU-DP COCI (data) - DS1 to DS0 Channel System - per month (2.4-64kbs) used for a Local Loop			UDL	1D1DD	2.00	13.09	9.38					24.85	8.16		
		OCU-DP COCI (data) - DS1 to DS0 Channel System - per month (2.4-64kbs) used for connection to a channelized DS1 Local Channel in the same SWC as collocation			U1TUD	1D1DD	2.00	13.09	9.38					24.85	8.16		
		2-wire ISDN COCI (BRITE) - DS1 to DS0 Channel Systsem - per month for a Local Loop			UDN	UC1CA	3.59	13.09	9.38					24.85	8.16		
		2-wire ISDN COCI (BRITE) - DS1 to DS0 Channel Systsem - per month used for connection to a channelized DS1 Local Channel in the same SWC as collocation			U1TUB	UC1CA	3.59	13.09	9.38					24.85	8.16		
		Voice Grade COCI - DS1 to DS0 Channel System - per month used for a Local Loop			UEA	1D1VG	1.27	13.09	9.38					24.85	8.16		
		Voice Grade COCI - DS1 to DS0 Channel System - per month used for connection to a channelized DS1 Local Channel in the same SWC as collocation			U1TUC	1D1VG	1.27	13.09	9.38					24.85	8.16		
		DS3 to DS1 Channel System (with the higher level connected to a collocation in the same SWC) per month			UXTD3	MQ3	233.10	403.97	234.40					24.78	7.42		
		DS3 to DS1 Channel System (used to channelize a DS3 Local Channel) per month			ULDD3	MQ3	233.10	403.97	234.40					38.07	38.07		
		DS3 to DS1 Channel System (used to channelize a DS3 Interoffice Channel per month			U1TD3	MQ3	233.10	403.97	234.40					38.07	38.07		
		STS-1 to DS1 Channel System (with the higher level connected to a collocation in the same SWC) per month			UXTS1	MQ3	233.10	403.97	234.40					38.07	38.07		
		STS-1 to DS1 Channel System (used to channelize a STS-1 Local Channel) per month			ULDS1	MQ3	233.10	403.97	234.40					38.07	38.07		
		STS-1 to DS1 Channel System (used to channelize a STS-1 Interoffice Channel) per month			U1TS1	MQ3	233.10	403.97	234.40					38.07	38.07		
		DS1 COCI used with Loop per month			USL	UC1D1	16.07	13.09	9.38					24.85	8.16		
		DS1 COCI (used for connection to a channelized DS1 Local Channel in the same SWC as collocation) per month			U1TUA	UC1D1	16.07	13.09	9.38					24.85	8.16		
		DS1 COCI used with Interoffice Channel per month			U1TD1	UC1D1	16.07	13.09	9.38					24.85	8.16		
	Sub-Loop Feeder																
		Unbundled Sub-Loop Feeder Loop, 4-Wire DS1 - Zone 1		1	UNC1X	USBFG	35.65	393.01	153.37								
		Unbundled Sub-Loop Feeder Loop, 4-Wire DS1 - Zone 2		2	UNC1X	USBFG	63.18	393.01	153.37								
		Unbundled Sub-Loop Feeder Loop, 4-Wire DS1 - Zone 3		3	UNC1X	USBFG	100.58	393.01	153.37								
UNBUNDLED LOCAL EXCHANGE SWITCHING(PORTS)																	
	Exchange Ports																
	NOTE: Although the Port Rate includes all available features in GA, KY, LA & TN, the desired features will need to be ordered using retail USOCs																
	2-WIRE VOICE GRADE LINE PORT RATES (RES)																
		Exchange Ports - 2-Wire Analog Line Port- Res.			UEPSR	UEPRL	2.19	21.60	21.60					26.94	12.76		

UNBUNDLED NETWORK ELEMENTS - North Carolina														Attachment: 2		Exhibit: B	
CATEGORY		RATE ELEMENTS	Interim	Zone	BCS	USOC	RATES ($)					Svc Order Submitted Elec per LSR	Svc Order Submitted Manually per LSR	Incremental Charge - Manual Svc Order vs. Electronic-1st	Incremental Charge - Manual Svc Order vs. Electronic-Add'l	Incremental Charge - Manual Svc Order vs. Electronic-Disc 1st	Incremental Charge - Manual Svc Order vs. Electronic-Disc Add'l
							Rec	Nonrecurring		Nonrecurring Disconnect		OSS Rates($)					
								First	Add'l	First	Add'l	SOMEC	SOMAN	SOMAN	SOMAN	SOMAN	SOMAN
		Exchange Ports - 2-Wire Analog Line Port with Caller ID - Res.			UEPSR	UEPRC	2.19	21.60	21.60					26.94	12.76		
		Exchange Ports - 2-Wire Analog Line Port outgoing only - Res.			UEPSR	UEPRO	2.19	21.60	21.60					26.94	12.76		
		Exchange Ports - 2-Wire VG unbundled res, low usage line port with Caller ID (LUM)			UEPSR	UEPAP	2.19	21.60	21.60					26.94	12.76		
		2-Wire voice unbundled Low Usage Line Port without Caller ID Capability			UEPSR	UEPRT	2.19	21.60	21.60					26.94	12.76		
		Subsequent Activity			UEPSR	USASC	0.00	0.00	0.00					26.94	12.76		
	FEATURES																
		All Available Vertical Features			UEPSR	UEPVF	3.40	0.00	0.00					26.94	12.76		
	2-WIRE VOICE GRADE LINE PORT RATES (BUS)																
		Exchange Ports - 2-Wire Analog Line Port without Caller ID - Bus			UEPSB	UEPBL	2.19	21.60	21.60					26.94	12.76		
		Exchange Ports - 2-Wire VG unbundled Line Port with unbundled port with Caller+E484 ID - Bus.			UEPSB	UEPBC	2.19	21.60	21.60					26.94	12.76		
		Exchange Ports - 2-Wire Analog Line Port outgoing only - Bus.			UEPSB	UEPBO	2.19	21.60	21.60					26.94	12.76		
		Exhange Ports - 2-Wire VG unbundled incoming only port with Caller ID - Bus			UEPSB	UEPB1	2.19	21.60	21.60					26.94	12.76		
		2-Wire voice unbundled Incoming Only Port without Caller ID Capability			UEPSB	UEPBE	2.19	21.60	21.60					26.94	12.76		
		Subsequent Activity			UEPSB	USASC	0.00	0.00	0.00								
	FEATURES																
		All Available Vertical Features			UEPSB	UEPVF	3.40	0.00	0.00					26.94	12.76		
	EXCHANGE PORT RATES (DID & PBX)																
		2-Wire VG Unbundled 2-Way PBX Trunk - Res			UEPSE	UEPRD	2.18	21.60	21.60					26.94	12.76		
		2-Wire VG Line Side Unbundled 2-Way PBX Trunk - Bus			UEPSP	UEPPC	2.18	21.60	21.60					26.94	12.76		
		2-Wire VG Line Side Unbundled Outward PBX Trunk - Bus			UEPSP	UEPPO	2.18	21.60	21.60					26.94	12.76		
		2-Wire VG Line Side Unbundled Incoming PBX Trunk - Bus			UEPSP	UEPP1	2.18	21.60	21.60					26.94	12.76		
		2-Wire Analog Long Distance Terminal PBX Trunk - Bus			UEPSP	UEPLD	2.18	21.60	21.60					26.94	12.76		
		2-Wire Voice Unbundled PBX LD Terminal Ports			UEPSP	UEPLD	2.18	21.60	21.60					26.94	12.76		
		2-Wire Vice Unbundled 2-Way PBX Usage Port			UEPSP	UEPXA	2.18	21.60	21.60					26.94	12.76		
		2-Wire Voice Unbundled PBX Toll Terminal Hotel Ports			UEPSP	UEPXB	2.18	21.60	21.60					26.94	12.76		
		2-Wire Voice Unbundled PBX LD DDD Terminals Port			UEPSP	UEPXC	2.18	21.60	21.60					26.94	12.76		
		2-Wire Voice Unbundled PBX LD Terminal Switchboard Port			UEPSP	UEPXD	2.18	21.60	21.60					26.94	12.76		
		2-Wire Voice Unbundled PBX LD Terminal Switchboard IDD Capable Port			UEPSP	UEPXE	2.18	21.60	21.60					26.94	12.76		
		2-Wire Voice Unbundled 2-Way PBX Hotel/Hospital Economy Administrative Calling Port			UEPSP	UEPXL	2.18	21.60	21.60					26.94	12.76		
		2-Wire Voice Unbundled 2-Way PBX Hotel/Hospital Economy Room Calling Port			UEPSP	UEPXM	2.18	21.60	21.60					26.94	12.76		
		2-Wire Voice Unbundled 1-Way Outgoing PBX Hotel/Hospital Discount Room Calling Port			UEPSP	UEPXO	2.18	21.60	21.60					26.94	12.76		
		2-Wire Voice Unbundled 1-Way Outgoing PBX Measured Port			UEPSP	UEPXS	2.18	21.60	21.60					26.94	12.76		
		Subsequent Activity			UEPSP	USASC	0.00	0.00	0.00					26.94	12.76		
	FEATURES																
		All Available Vertical Features			UEPSP UEPSE	UEPVF	3.40	0.00	0.00					26.94	12.76		
	EXCHANGE PORT RATES (COIN)																
		Exchange Ports - Coin Port					2.59	21.60	21.60					26.94	12.76		
	NOTE: Transmission/usage charges associated with POTS circuit switched usage will also apply to circuit switched voice and/or circuit switched data transmission by B-Channels associated with 2-wire ISDN ports.																
	NOTE: Access to B Channel or D Channel Packet capabilities will be available only through BFR/New Business Request Process. Rates for the packet capabilities will be determined via the Bona Fide Request/New Business Request Process.																
UNBUNDLED LOCAL EXCHANGE SWITCHING(PORTS)																	
	EXCHANGE PORT RATES																
		Exchange Ports - 2-Wire DID Port			UEPEX	UEPP2	12.36	81.84	81.84					26.94	12.76		
		Exchange Ports - DDITS Port - 4-Wire DS1 Port with DID capability			UEPDD	UEPDD	123.65	116.59	69.92					26.94	12.76		
		Exchange Ports - 2-Wire ISDN Port (See Notes below.)			UEPTX UEPSX	U1PMA	24.50	62.29	62.29					55.30	55.30		
		All Features Offered			UEPTX UEPSX	UEPVF	3.40	0.00	0.00								

UNBUNDLED NETWORK ELEMENTS - North Carolina													Attachment: 2		Exhibit: B	
CATEGORY	RATE ELEMENTS	Interim	Zone	BCS	USOC	RATES ($)					Svc Order Submitted Elec per LSR	Svc Order Submitted Manually per LSR	Incremental Charge - Manual Svc Order vs. Electronic-1st	Incremental Charge - Manual Svc Order vs. Electronic-Add'l	Incremental Charge - Manual Svc Order vs. Electronic-Disc 1st	Incremental Charge - Manual Svc Order vs. Electronic-Disc Add'l
						Rec	Nonrecurring		Nonrecurring Disconnect		OSS Rates($)					
							First	Add'l	First	Add'l	SOMEC	SOMAN	SOMAN	SOMAN	SOMAN	SOMAN
	NOTE: Transmission/usage charges associated with POTS circuit switched usage will also apply to circuit switched voice and/or circuit switched data transmission by B-Channels associated with 2-wire ISDN ports.															
	NOTE: Access to B Channel or D Channel Packet capabilities will be available only through BFR/New Business Request Process. Rates for the packet capabilities will be determined via the Bona Fide Request/New Business Request Process.															
	Exchange Ports - 2-Wire ISDN Port -- Channel Profiles			UEPTX UEPSX	U1UMA	0.00	0.00	0.00								
	Exchange Ports - 4-Wire ISDN DS1 Port			UEPEX	UEPEX	179.75	241.63	241.63					53.89	53.89		
	UNBUNDLED PORT with REMOTE CALL FORWARDING CAPABILITY															
	UNBUNDLED REMOTE CALL FORWARDING SERVICE - RESIDENCE															
	Unbundled Remote Call Forwarding Service, Area Calling, Res			UEPVR	UERAC	2.19	21.60	21.60					26.94	12.76		
	Unbundled Remote Call Forwarding Service, Local Calling - Res			UEPVR	UERLC	2.19	21.60	21.60					26.94	12.76		
	Unbundled Remote Call Forwarding Service, InterLATA - Res			UEPVR	UERTE	2.19	21.60	21.60					26.94	12.76		
	Unbundled Remote Call Forwarding Service, IntraLATA - Res			UEPVR	UERTR	2.19	21.60	21.60					26.94	12.76		
	Non-Recurring															
	Unbundled Remote Call Forwarding Service - Conversion - Switch-as-is			UEPVR	USAC2		2.77	0.40					26.94	12.76		
	Unbundled Remote Call Forwarding Service - Conversion with allowed change (PIC and LPIC)			UEPVR	USACC		2.77	0.40								
	UNBUNDLED REMOTE CALL FORWARDING - Bus															
	Unbundled Remote Call Forwarding Service, Area Calling - Bus			UEPVB	UERAC	2.19	21.60	21.60					26.94	12.76		
	Unbundled Remote Call Forwarding Service, Local Calling - Bus			UEPVB	UERLC	2.19	21.60	21.60					26.94	12.76		
	Unbundled Remote Call Forwarding Service, InterLATA - Bus			UEPVB	UERTE	2.19	21.60	21.60					26.94	12.76		
	Unbundled Remote Call Forwarding Service, IntraLATA - Bus			UEPVB	UERTR	2.19	21.60	21.60					26.94	12.76		
	Unbundled Remote Call Forwarding Service Expanded and Exception Local Calling			UEPVB	UERVJ	2.19	21.60	21.60					26.94	12.76		
	Non-Recurring															
	Unbundled Remote Call Forwarding Service - Conversion - Switch-as-is			UEPVB	USAC2		2.77	0.40					26.94	12.76		
	Unbundled Remote Call Forwarding Service - Conversion with allowed change (PIC and LPIC)			UEPVB	USACC		2.77	0.40								
UNBUNDLED LOCAL SWITCHING, PORT USAGE																
	End Office Switching (Port Usage)															
	End Office Switching Function, Per MOU					0.0015										
	End Office Trunk Port - Shared, Per MOU					0.00023										
	Tandem Switching (Port Usage) (Local or Access Tandem)															
	Tandem Switching Function Per MOU					0.0006										
	Tandem Trunk Port - Shared, Per MOU					0.0003										
	Common Transport															
	Common Transport - Per Mile, Per MOU					0.00001										
	Common Transport - Facilities Termination Per MOU					0.00034										
UNBUNDLED PORT/LOOP COMBINATIONS - COST BASED RATES																
	Cost Based Rates are applied where BellSouth is required by FCC and/or State Commission rule to provide Unbundled Local Switching or Switch Ports.															
	Features shall apply to the Unbundled Port/Loop Combination - Cost Based Rate section in the same manner as they are applied to the Stand-Alone Unbundled Port section of this Rate Exhibit.															
	End Office and Tandem Switching Usage and Common Transport Usage rates in the Port section of this rate exhibit shall apply to all combinations of loop/port network elements except for UNE Coin Port/Loop Combinations.															
	The first and additional Port nonrecurring charges apply to Not Currently Combined Combos. For Currently Combined Combos the nonrecurring charges shall be those identified in the Nonrecurring - Currently Combined sections.															
	2-WIRE VOICE GRADE LOOP WITH 2-WIRE LINE PORT (RES)															
	UNE Port/Loop Combination Rates															
	2-Wire VG Loop/Port Combo - Zone 1		1			13.03										
	2-Wire VG Loop/Port Combo - Zone 2		2			21.33										
	2-Wire VG Loop/Port Combo - Zone 3		3			32.61										
	UNE Loop Rates															
	2-Wire Voice Grade Loop (SL1) - Zone 1		1	UEPRX	UEPLX	10.75										
	2-Wire Voice Grade Loop (SL1) - Zone 2		2	UEPRX	UEPLX	19.05										
	2-Wire Voice Grade Loop (SL1) - Zone 3		3	UEPRX	UEPLX	30.33										
	2-Wire Voice Grade Line Port Rates (Res)															
	2-Wire voice unbundled port - residence			UEPRX	UEPRL	2.28	79.59	63.97					40.18	9.45		
	2-Wire voice unbundled port with Caller ID - res			UEPRX	UEPRC	2.28	79.59	63.97					40.18	9.45		
	2-Wire voice unbundled port outgoing only - res			UEPRX	UEPRO	2.28	79.59	63.97					40.18	9.45		

CATEGORY	RATE ELEMENTS	Interim	Zone	BCS	USOC	RATES ($)					Svc Order Submitted Elec per LSR	Svc Order Submitted Manually per LSR	Attachment: 2 Incremental Charge - Manual Svc Order vs. Electronic-1st	Attachment: 2 Incremental Charge - Manual Svc Order vs. Electronic-Add'l	Exhibit: B Incremental Charge - Manual Svc Order vs. Electronic-Disc 1st	Exhibit: B Incremental Charge - Manual Svc Order vs. Electronic-Disc Add'l
						Rec	Nonrecurring		Nonrecurring Disconnect		OSS Rates($)					
							First	Add'l	First	Add'l	SOMEC	SOMAN	SOMAN	SOMAN	SOMAN	SOMAN
	2-Wire voice unbundles res, low usage line port with Caller ID (LUM)			UEPRX	UEPAP	2.28	79.59	63.97					40.18	9.45		
	2-Wire voice unbundled Low Usage Line Port without Caller ID Capability			UEPRX	UEPRT	2.28	79.59	63.97					40.18	9.45		
FEATURES																
	All Features Offered			UEPRX	UEPVF	3.40	0.00	0.00					40.18	9.45		
LOCAL NUMBER PORTABILITY																
	Local Number Portability (1 per port)			UEPRX	LNPCX	0.35										
NONRECURRING CHARGES (NRCs) - CURRENTLY COMBINED																
	2-Wire Voice Grade Loop / Line Port Combination - Conversion - Switch-as-is			UEPRX	USAC2		2.77	0.40					40.18	9.45		
	2-Wire Voice Grade Loop / Line Port Combination - Conversion - Switch with change			UEPRX	USACC		2.77	0.40					40.18	9.45		
	2-Wire Voice Grade Loop / Line Port Combination - Conversion - Subsequent Database Update						1.42						10.27			
ADDITIONAL NRCs																
	2-Wire Voice Grade Loop/Line Port Combination - Subsequent Activity			UEPRX	USAS2	0.00	0.00	0.00					40.18	9.45		
2-WIRE VOICE GRADE LOOP WITH 2-WIRE LINE PORT (BUS)																
UNE Port/Loop Combination Rates																
	2-Wire VG Loop/Port Combo - Zone 1		1			13.03										
	2-Wire VG Loop/Port Combo - Zone 2		2			21.33										
	2-Wire VG Loop/Port Combo - Zone 3		3			32.61										
UNE Loop Rates																
	2-Wire Voice Grade Loop (SL1) - Zone 1		1	UEPBX	UEPLX	10.75										
	2-Wire Voice Grade Loop (SL1) - Zone 2		2	UEPBX	UEPLX	19.05										
	2-Wire Voice Grade Loop (SL1) - Zone 3		3	UEPBX	UEPLX	30.33										
2-Wire Voice Grade Line Port (Bus)																
	2-Wire voice unbundled port without Caller ID - bus			UEPBX	UEPBL	2.28	79.59	63.97					40.18	9.45		
	2-Wire voice unbundled port with Caller + E484 ID - bus			UEPBX	UEPBC	2.28	79.59	63.97					40.18	9.45		
	2-Wire voice unbundled port outgoing only - bus			UEPBX	UEPBO	2.28	79.59	63.97					40.18	9.45		
	2-Wire voice unbundled incoming only port with Caller ID - Bus			UEPBX	UEPB1	2.28	79.59	63.97					40.18	9.45		
	2-Wire voice unbundled Incoming Only Port without Caller ID Capability			UEPBX	UEPBE	2.28	79.59	63.97					40.18	9.45		
LOCAL NUMBER PORTABILITY																
	Local Number Portability (1 per port)			UEPBX	LNPCX	0.35										
FEATURES																
	All Features Offered			UEPBX	UEPVF	3.40	0.00	0.00					40.18	9.45		
NONRECURRING CHARGES (NRCs) - CURRENTLY COMBINED																
	2-Wire Voice Grade Loop / Line Port Combination - Conversion - Switch-as-is			UEPBX	USAC2		2.77	0.40					40.18	9.45		
	2-Wire Voice Grade Loop / Line Port Combination - Conversion - Switch with change			UEPBX	USACC		2.77	0.40					40.18	9.45		
	2-Wire Voice Grade Loop / Line Port Combination - Conversion - Subsequent Database Update						1.42						10.27			
ADDITIONAL NRCs																
	2-Wire Voice Grade Loop/Line Port Combination - Subsequent Activity			UEPBX	USAS2		0.00	0.00					40.18	9.45		
2-WIRE VOICE GRADE LOOP WITH 2-WIRE LINE PORT (RES - PBX)																
UNE Port/Loop Combination Rates																
	2-Wire VG Loop/Port Combo - Zone 1		1			13.03										
	2-Wire VG Loop/Port Combo - Zone 2		2			21.33										
	2-Wire VG Loop/Port Combo - Zone 3		3			32.61										
UNE Loop Rates																
	2-Wire Voice Grade Loop (SL 1) - Zone 1		1	UEPRG	UEPLX	10.75										
	2-Wire Voice Grade Loop (SL 1) - Zone 2		2	UEPRG	UEPLX	19.05										
	2-Wire Voice Grade Loop (SL 1) - Zone 3		3	UEPRG	UEPLX	30.33										
2-Wire Voice Grade Line Port Rates (RES - PBX)																

UNBUNDLED NETWORK ELEMENTS - North Carolina													Attachment: 2		Exhibit: B	
CATEGORY	RATE ELEMENTS	Interim	Zone	BCS	USOC	RATES ($)					Svc Order Submitted Elec per LSR	Svc Order Submitted Manually per LSR	Incremental Charge - Manual Svc Order vs. Electronic-1st	Incremental Charge - Manual Svc Order vs. Electronic-Add'l	Incremental Charge - Manual Svc Order vs. Electronic-Disc 1st	Incremental Charge - Manual Svc Order vs. Electronic-Disc Add'l
						Rec	Nonrecurring		Nonrecurring Disconnect		OSS Rates($)					
							First	Add'l	First	Add'l	SOMEC	SOMAN	SOMAN	SOMAN	SOMAN	SOMAN
	2-Wire VG Unbundled Combination 2-Way PBX Trunk Port - Res			UEPRG	UEPRD	2.28	164.57	128.16					40.18	9.45		
LOCAL NUMBER PORTABILITY																
	Local Number Portability (1 per port)			UEPRG	LNPCP	3.15	0.00	0.00								
FEATURES																
	All Features Offered			UEPRG	UEPVF	3.40	0.00	0.00					40.18	9.45		
NONRECURRING CHARGES (NRCs) - CURRENTLY COMBINED																
	2-Wire Voice Grade Loop/ Line Port Combination (PBX) - Conversion - Switch-As-Is			UEPRG	USAC2		2.77	0.40					40.18	9.45		
	2-Wire Voice Grade Loop/ Line Port Combination (PBX) - Conversion - Switch with Change			UEPRG	USACC		2.77	0.40					40.18	9.45		
	2-Wire Voice Grade Loop / Line Port Combination - Conversion - Subsequent Database Update						1.42						10.27			
ADDITIONAL NRCs																
	2-Wire Voice Grade Loop/ Line Port Combination (PBX) - Subsequent Activity			UEPRG	USAS2	0.00	0.00	0.00					40.18	9.45		
2-WIRE VOICE GRADE LOOP WITH 2-WIRE LINE PORT (BUS - PBX)																
UNE Port/Loop Combination Rates																
	2-Wire VG Loop/Port Combo - Zone 1		1			13.03										
	2-Wire VG Loop/Port Combo - Zone 2		2			21.33										
	2-Wire VG Loop/Port Combo - Zone 3		3			32.61										
UNE Loop Rates																
	2-Wire Voice Grade Loop (SL 1) - Zone 1		1	UEPPX	UEPLX	10.75										
	2-Wire Voice Grade Loop (SL 1) - Zone 2		2	UEPPX	UEPLX	19.05										
	2-Wire Voice Grade Loop (SL 1) - Zone 3		3	UEPPX	UEPLX	30.33										
2-Wire Voice Grade Line Port Rates (BUS - PBX)																
	Line Side Unbundled Combination 2-Way PBX Trunk Port - Bus			UEPPX	UEPPC	2.28	164.57	128.16					40.18	9.45		
	Line Side Unbundled Outward PBX Trunk Port - Bus			UEPPX	UEPPO	2.28	164.57	128.16					40.18	9.45		
	Line Side Unbundled Incoming PBX Trunk Port - Bus			UEPPX	UEPP1	2.28	164.57	128.16					40.18	9.45		
	2-Wire Voice Unbundled PBX LD Terminal Ports			UEPPX	UEPLD	2.28	164.57	128.16					40.18	9.45		
	2-Wire Voice Unbundled 2-Way Combination PBX Usage Port			UEPPX	UEPXA	2.28	164.57	128.16					40.18	9.45		
	2-Wire Voice Unbundled PBX Toll Terminal Hotel Ports			UEPPX	UEPXB	2.28	164.57	128.16					40.18	9.45		
	2-Wire Voice Unbundled PBX LD DDD Terminals Port			UEPPX	UEPXC	2.28	164.57	128.16					40.18	9.45		
	2-Wire Voice Unbundled PBX LD Terminal Switchboard Port			UEPPX	UEPXD	2.28	164.57	128.16					40.18	9.45		
	2-Wire Voice Unbundled PBX LD Terminal Switchboard IDD Capable Port			UEPPX	UEPXE	2.28	164.57	128.16					40.18	9.45		
	2-Wire Voice Unbundled 2-Way PBX Hotel/Hospital Economy Administrative Calling Port			UEPPX	UEPXL	2.28	164.57	128.16					40.18	9.45		
	2-Wire Voice Unbundled 2-Way PBX Hotel/Hospital Economy Room Calling Port			UEPPX	UEPXM	2.28	164.57	128.16					40.18	9.45		
	2-Wire Voice Unbundled 1-Way Outgoing PBX Hotel/Hospital Discount Room Calling Port			UEPPX	UEPXO	2.28	164.57	128.16					40.18	9.45		
	2-Wire Voice Unbundled 1-Way Outgoing PBX Measured Port			UEPPX	UEPXS	2.28	164.57	128.16					40.18	9.45		
LOCAL NUMBER PORTABILITY																
	Local Number Portability (1 per port)			UEPPX	LNPCP	3.15	0.00	0.00					40.18	9.45		
FEATURES																
	All Features Offered			UEPPX	UEPVF	3.40	0.00	0.00					40.18	9.45		
NONRECURRING CHARGES (NRCs) - CURRENTLY COMBINED																
	2-Wire Voice Grade Loop/ Line Port Combination (PBX) - Conversion - Switch-As-Is			UEPPX	USAC2		2.77	0.40					40.18	9.45		
	2-Wire Voice Grade Loop/ Line Port Combination (PBX) - Conversion - Switch with Change			UEPPX	USACC		2.77	0.40					40.18	9.45		
	2-Wire Voice Grade Loop / Line Port Combination - Conversion - Subsequent Database Update						1.42						10.27			
ADDITIONAL NRCs																
	2-Wire Voice Grade Loop/ Line Port Combination (PBX) - Subsequent Activity			UEPPX	USAS2	0.00	0.00	0.00					40.18	9.45		
2-WIRE VOICE GRADE LOOP WITH 2-WIRE ANALOG LINE COIN PORT																

UNBUNDLED NETWORK ELEMENTS - North Carolina													Attachment: 2		Exhibit: B	
CATEGORY	RATE ELEMENTS	Interim	Zone	BCS	USOC	RATES ($)					Svc Order Submitted Elec per LSR	Svc Order Submitted Manually per LSR	Incremental Charge - Manual Svc Order vs. Electronic-1st	Incremental Charge - Manual Svc Order vs. Electronic-Add'l	Incremental Charge - Manual Svc Order vs. Electronic-Disc 1st	Incremental Charge - Manual Svc Order vs. Electronic-Disc Add'l
						Rec	Nonrecurring		Nonrecurring Disconnect		OSS Rates($)					
							First	Add'l	First	Add'l	SOMEC	SOMAN	SOMAN	SOMAN	SOMAN	SOMAN
UNE Port/Loop Combination Rates																
	2-Wire VG Coin Port/Loop Combo – Zone 1		1			13.03										
	2-Wire VG Coin Port/Loop Combo – Zone 2		2			21.33										
	2-Wire VG Coin Port/Loop Combo – Zone 3		3			32.61										
UNE Loop Rates																
	2-Wire Voice Grade Loop (SL1) - Zone 1		1	UEPCO	UEPLX	10.75										
	2-Wire Voice Grade Loop (SL1) - Zone 2		2	UEPCO	UEPLX	19.05										
	2-Wire Voice Grade Loop (SL1) - Zone 3		3	UEPCO	UEPLX	30.33										
2-Wire Voice Grade Line Ports (COIN)																
	2-Wire Coin 2-Way without Operator Screening and without Blocking (NC)			UEPCO	UEPND	2.28	79.59	63.97					40.18	9.45		
	2-Wire Coin 2-Way with Operator Screening (NC)			UEPCO	UEPNC	2.28	79.59	63.97					40.18	9.45		
	2-Wire Coin 2-Way with Operator Screening and Blocking: 011, 900/976, 1+DDD (NC, TN)			UEPCO	UEPRP	2.28	79.59	63.97					40.18	9.45		
	2-Wire Coin 2-Way with Operator Screening and 011 Blocking (NC)			UEPCO	UEPNB	2.28	79.59	63.97					40.18	9.45		
	2-Wire Coin 2-Way with Operator Screening: 900 Blocking: 900/976, 1+DDD, 011+, and Local (NC, TN)			UEPCO	UEPCA	2.28	79.59	63.97					40.18	9.45		
	2-Wire Coin Outward with Operator Screening and 011 Blocking (NC)			UEPCO	UEPNE	2.28	79.59	63.97					40.18	9.45		
	2-Wire Coin Outward with Operator Screening and Blocking: 900/976, 1+DDD, 011+, and Local (NC)			UEPCO	UEPCL	2.28	79.59	63.97					40.18	9.45		
	2-Wire 2-Way Smartline with 900/976 (all states except LA)			UEPCO	UEPCK	2.28	79.59	63.97					40.18	9.45		
	2-Wire Coin Outward Smartline with 900/976 (all states except LA)			UEPCO	UEPCR	2.28	79.59	63.97					40.18	9.45		
ADDITIONAL UNE COIN PORT/LOOP (RC)																
	UNE Coin Port/Loop Combo Usage (Flat Rate)			UEPCO	URECU	3.70	0.00	0.00	0.00	0.00			40.18	9.45		
LOCAL NUMBER PORTABILITY																
	Local Number Portability (1 per port)			UEPCO	LNPCX	0.35										
NONRECURRING CHARGES - CURRENTLY COMBINED																
	2-Wire Voice Grade Loop / Line Port Combination - Conversion - Switch-as-is			UEPCO	USAC2		2.77	0.40					40.18	9.45		
	2-Wire Voice Grade Loop / Line Port Combination - Conversion - Switch with change			UEPCO	USACC		2.77	0.40					40.18	9.45		
	2-Wire Voice Grade Loop / Line Port Combination - Conversion - Subsequent Database Update						1.42									
ADDITIONAL NRCs																
	2-Wire Voice Grade Loop/Line Port Combination - Subsequent Activity			UEPCO	USAS2		0.00	0.00					40.18	9.45		
2-WIRE VOICE LOOP/ 2WIRE VOICE GRADE IO TRANSPORT/ 2-WIRE LINE PORT (RES)																
UNE Port/Loop Combination Rates																
UNE Loop Rates																
2-Wire Voice Grade Line Port Rates (Res)																
	2-Wire voice unbundled port - residence			UEPFR	UEPRL	2.19	225.00	225.00					40.18	9.45		
	2-Wire voice unbundled port with Caller ID - res			UEPFR	UEPRC	2.19	225.00	225.00					40.18	9.45		
	2-Wire voice unbundled port outgoing only - res			UEPFR	UEPRO	2.19	225.00	225.00					40.18	9.45		
	2-Wire voice unbundles res, low usage line port with Caller ID (LUM)			UEPFR	UEPAP	2.19	225.00	225.00					40.18	9.45		
INTEROFFICE TRANSPORT																
	Interoffice Transport - Dedicated - 2 Wire Voice Grade - Facility Termination			UEPFR	U1TV2	18.00	140.00	71.00								
	Interoffice Transport - Dedicated - 2 Wire Voice Grade - Per Mile or Fraction Mile			UEPFR	1L5XX	0.0125										
FEATURES																
	All Features Offered			UEPFR	UEPVF	3.40	0.00	0.00					40.18	9.45		
LOCAL NUMBER PORTABILITY																
	Local Number Portability (1 per port)			UEPFR	LNPCX	0.35										
NONRECURRING CHARGES (NRCs) - CURRENTLY COMBINED																

CATEGORY	RATE ELEMENTS	Interim	Zone	BCS	USOC	RATES ($)					Svc Order Submitted Elec per LSR	Svc Order Submitted Manually per LSR	Attachment: 2 Incremental Charge - Manual Svc Order vs. Electronic-1st	Attachment: 2 Incremental Charge - Manual Svc Order vs. Electronic-Add'l	Exhibit: B Incremental Charge - Manual Svc Order vs. Electronic-Disc 1st	Exhibit: B Incremental Charge - Manual Svc Order vs. Electronic-Disc Add'l
						Rec	Nonrecurring		Nonrecurring Disconnect		OSS Rates($)					
							First	Add'l	First	Add'l	SOMEC	SOMAN	SOMAN	SOMAN	SOMAN	SOMAN
	2-Wire Loop / Dedicated IO Transport / 2 Wire Line Port Combination - Conversion - Switch-as-is			UEPFR	USAC2		9.03	1.87					40.18	9.45		
	2-Wire Loop / Dedicated IO Transport / 2 Wire Line Port Combination - Conversion - Switch-With-Change			UEPFR	USACC		9.03	1.87					40.18	9.45		
2-WIRE VOICE LOOP/ 2WIRE VOICE GRADE IO TRANSPORT/ 2-WIRE LINE PORT (BUS)																
UNE Port/Loop Combination Rates																
UNE Loop Rates																
2-Wire Voice Grade Line Port (Bus)																
	2-Wire voice unbundled port without Caller ID - bus			UEPFB	UEPBL	2.19	225.00	225.00					40.18	9.45		
	2-Wire voice unbundled port with Caller + E484 ID - bus			UEPFB	UEPBC	2.19	225.00	225.00					40.18	9.45		
	2-Wire voice unbundled port outgoing only - bus			UEPFB	UEPBO	2.19	225.00	225.00					40.18	9.45		
	2-Wire voice unbundled incoming only port with Caller ID - Bus			UEPFB	UEPB1	2.19	225.00	225.00					40.18	9.45		
LOCAL NUMBER PORTABILITY																
	Local Number Portability (1 per port)			UEPFB	LNPCX	0.35										
INTEROFFICE TRANSPORT																
	Interoffice Transport - Dedicated - 2 Wire Voice Grade - Facility Termination			UEPFB	U1TV2											
	Interoffice Transport - Dedicated - 2 Wire Voice Grade - Per Mile or Fraction Mile			UEPFB	1L5XX											
FEATURES																
	All Features Offered			UEPFB	UEPVF	3.40	0.00	0.00					40.18	9.45		
NONRECURRING CHARGES (NRCs) - CURRENTLY COMBINED																
	2-Wire Loop / Dedicated IO Transport / 2 Wire Line Port Combination - Conversion - Switch-as-is			UEPFB	USAC2		9.03	1.87					40.18	9.45		
	2-Wire Loop / Dedicated IO Transport / 2 Wire Line Port Combination - Conversion - Switch with change			UEPFB	USACC		9.03	1.87					40.18	9.45		
2-WIRE VOICE GRADE LOOP WITH 2-WIRE LINE PORT (BUS - PBX)																
UNE Port/Loop Combination Rates																
UNE Loop Rates																
2-Wire Voice Grade Line Port Rates (BUS - PBX)																
	Line Side Unbundled Combination 2-Way PBX Trunk Port - Bus			UEPFP	UEPPC	2.18	225.00	225.00					40.18	9.45		
	Line Side Unbundled Outward PBX Trunk Port - Bus			UEPFP	UEPPO	2.18	225.00	225.00					40.18	9.45		
	Line Side Unbundled Incoming PBX Trunk Port - Bus			UEPFP	UEPP1	2.18	225.00	225.00					40.18	9.45		
	2-Wire Voice Unbundled PBX LD Terminal Ports			UEPFP	UEPLD	2.18	225.00	225.00					40.18	9.45		
	2-Wire Voice Unbundled 2-Way Combination PBX Usage Port			UEPFP	UEPXA	2.18	225.00	225.00					40.18	9.45		
	2-Wire Voice Unbundled PBX Toll Terminal Hotel Ports			UEPFP	UEPXB	2.18	225.00	225.00					40.18	9.45		
	2-Wire Voice Unbundled PBX LD DDD Terminals Port			UEPFP	UEPXC	2.18	225.00	225.00					40.18	9.45		
	2-Wire Voice Unbundled PBX LD Terminal Switchboard Port			UEPFP	UEPXD	2.18	225.00	225.00					40.18	9.45		
	2-Wire Voice Unbundled PBX LD Terminal Switchboard IDD Capable Port			UEPFP	UEPXE	2.18	225.00	225.00					40.18	9.45		
	2-Wire Voice Unbundled 2-Way PBX Hotel/Hospital Economy Administrative Calling Port			UEPFP	UEPXL	2.18	225.00	225.00					40.18	9.45		
	2-Wire Voice Unbundled 2-Way PBX Hotel/Hospital Economy Room Calling Port			UEPFP	UEPXM	2.18	225.00	225.00					40.18	9.45		
	2-Wire Voice Unbundled 1-Way Outgoing PBX Hotel/Hospital Discount Room Calling Port			UEPFP	UEPXO	2.18	225.00	225.00					40.18	9.45		
	2-Wire Voice Unbundled 1-Way Outgoing PBX Measured Port			UEPFP	UEPXS	2.18	225.00	225.00					40.18	9.45		
LOCAL NUMBER PORTABILITY																
	Local Number Portability (1 per port)			UEPFP	LNPCP	3.15	0.00	0.00					40.18	9.45		
INTEROFFICE TRANSPORT																
	Interoffice Transport - Dedicated - 2 Wire Voice Grade - Facility Termination			UEPFP	U1TV2											
	Interoffice Transport - Dedicated - 2 Wire Voice Grade - Per Mile or Fraction Mile			UEPFP	1L5XX											
FEATURES																
	All Features Offered			UEPFP	UEPVF	3.40	0.00	0.00					40.18	9.45		
NONRECURRING CHARGES (NRCs) - CURRENTLY COMBINED																

CATEGORY	RATE ELEMENTS	Interim	Zone	BCS	USOC	RATES ($) Rec	Nonrecurring First	Nonrecurring Add'l	Nonrecurring Disconnect First	Nonrecurring Disconnect Add'l	Svc Order Submitted Elec per LSR	Svc Order Submitted Manually per LSR	Attachment: 2 Incremental Charge - Manual Svc Order vs. Electronic-1st	Attachment: 2 Incremental Charge - Manual Svc Order vs. Electronic-Add'l	Exhibit: B Incremental Charge - Manual Svc Order vs. Electronic-Disc 1st	Exhibit: B Incremental Charge - Manual Svc Order vs. Electronic-Disc Add'l
											OSS Rates($)					
											SOMEC	SOMAN	SOMAN	SOMAN	SOMAN	SOMAN
	2-Wire Loop / Dedicated IO Transport / 2 Wire Line Port Combination - Conversion - Switch-as-is			UEPFP	USAC2		9.03	1.87					40.18	9.45		
	2-Wire Loop / Dedicated IO Transport / 2 Wire Line Port Combination - Conversion - Switch with change			UEPFP	USACC		9.03	1.87					40.18	9.45		
UNBUNDLED PORT/LOOP COMBINATIONS - COST BASED RATES																
2-WIRE VOICE GRADE LOOP- BUS ONLY - WITH 2-WIRE DID TRUNK PORT																
UNE Port/Loop Combination Rates																
	2-Wire VG Loop/2-Wire DID Trunk Port Combo - UNE Zone 1		1			20.97										
	2-Wire VG Loop/2-Wire DID Trunk Port Combo - UNE Zone 2		2			27.80										
	2-Wire VG Loop/2-Wire DID Trunk Port Combo - UNE Zone 3		3			37.08										
UNE Loop Rates																
	2-Wire Analog Voice Grade Loop - (SL2) - UNE Zone 1		1	UEPPX	UECD1	8.85										
	2-Wire Analog Voice Grade Loop - (SL2) - UNE Zone 2		2	UEPPX	UECD1	15.68										
	2-Wire Analog Voice Grade Loop - (SL2) - UNE Zone 3		3	UEPPX	UECD1	24.96										
UNE Port Rate																
	Exchange Ports - 2-Wire DID Port			UEPPX	UEPD1	12.12	224.81	188.40					40.18	9.45		
NONRECURRING CHARGES - CURRENTLY COMBINED																
	2-Wire Voice Grade Loop / 2-Wire DID Trunk Port Combination - Switch-as-is			UEPPX	USAC1		13.26	8.39					53.89	11.34		
	2-Wire Voice Grade Loop / 2-Wire DID Trunk Port Conversion with BellSouth Allowable Changes			UEPPX	USA1C		13.26	8.39					53.89	11.34		
ADDITIONAL NRCs																
	2-Wire DID Subsequent Activity - Add Trunks, Per Trunk			UEPPX	USAS1		53.49						40.18	9.45		
Telephone Number/Trunk Group Establisment Charges																
	DID Trunk Termination (One Per Port)			UEPPX	NDT	0.00	0.00	0.00								
	DID Numbers, Establish Trunk Group and Provide First Group of 20 DID Numbers			UEPPX	NDZ	0.00	0.00	0.00								
	Additional DID Numbers for each Group of 20 DID Numbers			UEPPX	ND4	0.00	0.00	0.00								
	DID Numbers, Non- consecutive DID Numbers , Per Number			UEPPX	ND5	0.00	0.00	0.00								
	Reserve Non-Consecutive DID numbers			UEPPX	ND6	0.00	0.00	0.00								
	Reserve DID Numbers			UEPPX	NDV	0.00	0.00	0.00								
LOCAL NUMBER PORTABILITY																
	Local Number Portability (1 per port)			UEPPX	LNPCP	3.15	0.00	0.00								
2-WIRE ISDN DIGITAL GRADE LOOP WITH 2-WIRE ISDN DIGITAL LINE SIDE PORT																
UNE Port/Loop Combination Rates																
	2W ISDN Digital Grade Loop/2W ISDN Digital Line Side Port - UNE Zone 1		1	UEPPB UEPPR		38.84										
	2W ISDN Digital Grade Loop/2W ISDN Digital Line Side Port - UNE Zone 2		2	UEPPB UEPPR		50.01										
	2W ISDN Digital Grade Loop/2W ISDN Digital Line Side Port - UNE Zone 3		3	UEPPB UEPPR		65.18										
UNE Loop Rates																
	2-Wire ISDN Digital Grade Loop - UNE Zone 1		1	UEPPB UEPPR	USL2X	14.47										
	2-Wire ISDN Digital Grade Loop - UNE Zone 2		2	UEPPB UEPPR	USL2X	25.64										
	2-Wire ISDN Digital Grade Loop - UNE Zone 3		3	UEPPB UEPPR	USL2X	40.81										
UNE Port Rate																
	Exchange Port - 2-Wire ISDN Line Side Port			UEPPB UEPPR	UEPPB	24.37	388.20	302.77					19.99	19.99		
NONRECURRING CHARGES - CURRENTLY COMBINED																
	2-Wire ISDN Digital Grade Loop / 2-Wire ISDN Line Side Port Combination - Conversion			UEPPB UEPPR	USACB	0.00	174.35	174.35								
ADDITIONAL NRCs																
LOCAL NUMBER PORTABILITY																
	Local Number Portability (1 per port)			UEPPB UEPPR	LNPCX	0.35	0.00	0.00								
B-CHANNEL USER PROFILE ACCESS:																
	CVS/CSD (DMS/5ESS)			UEPPB UEPPR	U1UCA	0.00	0.00	0.00								
	CVS (EWSD)			UEPPB UEPPR	U1UCB	0.00	0.00	0.00								
	CSD			UEPPB UEPPR	U1UCC	0.00	0.00	0.00								
B-CHANNEL AREA PLUS USER PROFILE ACCESS: (AL,KY,LA,MS SC,MS, & TN)																

UNBUNDLED NETWORK ELEMENTS - North Carolina

CATEGORY	RATE ELEMENTS	Interim	Zone	BCS	USOC	RATES ($) Rec	Nonrecurring First	Nonrecurring Add'l	Nonrecurring Disconnect First	Nonrecurring Disconnect Add'l	Svc Order Submitted Elec per LSR	Svc Order Submitted Manually per LSR	Attachment: 2 Incremental Charge - Manual Svc Order vs. Electronic-1st	Attachment: 2 Incremental Charge - Manual Svc Order vs. Electronic-Add'l	Exhibit: B Incremental Charge - Manual Svc Order vs. Electronic-Disc 1st	Exhibit: B Incremental Charge - Manual Svc Order vs. Electronic-Disc Add'l
											OSS Rates($)					
											SOMEC	SOMAN	SOMAN	SOMAN	SOMAN	SOMAN
USER TERMINAL PROFILE																
	User Terminal Profile (EWSD only)			UEPPB UEPPR	U1UMA	0.00	0.00	0.00								
VERTICAL FEATURES																
	All Vertical Features - One per Channel B User Profile			UEPPB UEPPR	UEPVF	3.40	0.00	0.00								
INTEROFFICE CHANNEL MILEAGE																
	Interoffice Channel mileage each, including first mile and facilities termination			UEPPB UEPPR	M1GNC	18.0282	137.48	52.58					19.99	19.99		
	Interoffice Channel mileage each, additional mile			UEPPB UEPPR	M1GNM	0.0282	0.00	0.00								
4-WIRE DS1 DIGITAL LOOP WITH 4-WIRE ISDN DS1 DIGITAL TRUNK PORT																
UNE Port/Loop Combination Rates																
	4W DS1 Digital Loop/4W ISDN DS1 Digital Trunk Port - UNE Zone 1		1	UEPPP		226.55										
	4W DS1 Digital Loop/4W ISDN DS1 Digital Trunk Port - UNE Zone 2		2	UEPPP		263.28										
	4W DS1 Digital Loop/4W ISDN DS1 Digital Trunk Port - UNE Zone 3		3	UEPPP		313.15										
UNE Loop Rates																
	4-Wire DS1 Digital Loop - UNE Zone 1		1	UEPPP	USL4P	47.54										
	4-Wire DS1 Digital Loop - UNE Zone 2		2	UEPPP	USL4P	84.27										
	4-Wire DS1 Digital Loop - UNE Zone 3		3	UEPPP	USL4P	134.14										
UNE Port Rate																
	Exchange Ports - 4-Wire ISDN DS1 Port			UEPPP	UEPPP	179.01	956.47	663.10					19.99	19.99		
NONRECURRING CHARGES - CURRENTLY COMBINED																
	4-Wire DS1 Digital Loop / 4-Wire ISDN DS1 Digital Trunk Port Combination - Conversion -Switch-as-is			UEPPP	USACP	0.00	481.51	481.51								
ADDITIONAL NRCs																
	4-Wire DS1 Loop / 4-Wire ISDN DS1 Digital Trunk Port - Subsequent Inward/2-Way Tel Nos - (NC Only)			UEPPP	PR7TG		1.17	1.17								
	4-Wire DS1 Loop/4-Wire ISDN Digital Trunk Port - Subsequent Activity Outward tel nos. (NC only)			UEPPP	PR7TP		28.17	28.17								
	4-Wire DS1 Loop / 4-Wire ISDN DS1 Digital Trk Port - Subsequent Inward Tel Numbers			UEPPP	PR7ZT		56.33	56.33								
LOCAL NUMBER PORTABILITY																
	Local Number Portability (1 per port)			UEPPP	LNPCN	1.75										
INTERFACE (Provsioning Only)																
	Voice/Data			UEPPP	PR71V	0.00	0.00	0.00								
	Digital Data			UEPPP	PR71D	0.00	0.00	0.00								
	Inward Data			UEPPP	PR71E	0.00	0.00	0.00								
New or Additional "B" Channel																
	New or Additional - Voice/Data B Channel			UEPPP	PR7BV	0.00	36.92						19.99	19.99		
	New or Additional - Digital Data B Channel			UEPPP	PR7BF	0.00	36.92						19.99	19.99		
	New or Additional Inward Data B Channel			UEPPP	PR7BD	0.00	36.92						19.99	19.99		
CALL TYPES																
	Inward			UEPPP	PR7C1	0.00	0.00	0.00								
	Outward			UEPPP	PR7CO	0.00	0.00	0.00								
	Two-way			UEPPP	PR7CC	0.00	0.00	0.00								
Interoffice Channel Mileage																
	Fixed Each Including First Mile			UEPPP	1LN1A	71.8653	217.17	163.75	0.00				19.99	19.99		
	Each Airline-Fractional Additional Mile			UEPPP	1LN1B	0.5753										
4-WIRE DS1 DIGITAL LOOP WITH 4-WIRE DDITS TRUNK PORT																
UNE Port/Loop Combination Rates																
	4W DS1 Digital Loop/4W DDITS Trunk Port - UNE Zone 1		1	UEPDC		171.06										
	4W DS1 Digital Loop/4W DDITS Trunk Port - UNE Zone 2		2	UEPDC		207.79										
	4W DS1 Digital Loop/4W DDITS Trunk Port - UNE Zone 3		3	UEPDC		257.66										
UNE Loop Rates																
	4-Wire DS1 Digital Loop - UNE Zone 1		1	UEPDC	USLDC	47.54										
	4-Wire DS1 Digital Loop - UNE Zone 2		2	UEPDC	USLDC	84.27										
	4-Wire DS1 Digital Loop - UNE Zone 3		3	UEPDC	USLDC	134.14										
UNE Port Rate																

UNBUNDLED NETWORK ELEMENTS - North Carolina													Attachment: 2		Exhibit: B	
CATEGORY	RATE ELEMENTS	Interim	Zone	BCS	USOC	RATES ($)					Svc Order Submitted Elec per LSR	Svc Order Submitted Manually per LSR	Incremental Charge - Manual Svc Order vs. Electronic-1st	Incremental Charge - Manual Svc Order vs. Electronic-Add'l	Incremental Charge - Manual Svc Order vs. Electronic-Disc 1st	Incremental Charge - Manual Svc Order vs. Electronic-Disc Add'l
						Rec	Nonrecurring		Nonrecurring Disconnect		OSS Rates($)					
							First	Add'l	First	Add'l	SOMEC	SOMAN	SOMAN	SOMAN	SOMAN	SOMAN
	4-Wire DDITS Digital Trunk Port			UEPDC	UDD1T	123.52	831.43	491.39					19.99	19.99		
	NONRECURRING CHARGES - CURRENTLY COMBINED															
	4-Wire DS1 Digital Loop / 4-Wire DDITS Trunk Port Combination - Switch-as-is			UEPDC	USAC4		490.38	490.38								
	4-Wire DS1 Digital Loop / 4-Wire DDITS Trunk Port Combination - Conversion with DS1 Changes			UEPDC	USAWA		490.38	490.38								
	4-Wire DS1 Digital Loop / 4-Wire DDITS Trunk Port Combination - Conversion with Change - Trunk			UEPDC	USAWB		490.38	490.38								
	ADDITIONAL NRCs															
	4-Wire DS1 Loop / 4-Wire DDITS Trunk Port - Subsequent Service Activity Per Service Order			UEPDC	USAS4		127.63	127.63								
	4-Wire DS1 Loop / 4-Wire DDITS Trunk Port - NRC - Subsequent Channel Activation/Chan - 2-Way Trunk			UEPDC	UDTTA		28.81	28.81								
	4-Wire DS1 Loop / 4-Wire DDITS Trunk Port - Subsequent Channel Activation/Chan - 1-Way Outward Trunk			UEPDC	UDTTB		28.81	28.81								
	4-Wire DS1 Loop / 4-Wire DDITS Trunk Port - Subsqnt Channel Activation/Chan Inward Trunk w/out DID			UEPDC	UDTTC		28.81	28.81					19.99	19.99		
	4-Wire DS1 Loop / 4-Wire DDITS Trunk Port - Subsqnt Chan Activation Per Chan - Inward Trunk with DID			UEPDC	UDTTD		28.81	28.81					19.99	19.99		
	4-Wire DS1 Loop / 4-Wire DDITS Trunk Port - Subsqnt Chan Activation / Chan - 2-Way DID w User Trans			UEPDC	UDTTE		28.81	28.81								
	BIPOLAR 8 ZERO SUBSTITUTION															
	B8ZS -Superframe Format			UEPDC	CCOSF		0.00	615.00								
	B8ZS - Extended Superframe Format			UEPDC	CCOEF		0.00	615.00								
	Alternate Mark Inversion															
	AMI -Superframe Format			UEPDC	MCOSF		0.00	0.00								
	AMI - Extended SuperFrame Format			UEPDC	MCOPO		0.00	0.00								
	Telephone Number/Trunk Group Establisment Charges															
	Telephone Number for 2-Way Trunk Group			UEPDC	UDTGX	0.00							19.99	19.99		
	Telephone Number for 1-Way Outward Trunk Group			UEPDC	UDTGY	0.00							19.99	19.99		
	Telephone Number for 1-Way Inward Trunk Group Without DID			UEPDC	UDTGZ	0.00							19.99	19.99		
	DID Numbers, Establish Trunk Group and Provide First Group of 20 DID Numbers			UEPDC	NDZ	0.00	0.00	0.00								
	DID Numbers for each Group of 20 DID Numbers			UEPDC	ND4	0.00										
	DID Numbers, Non- consecutive DID Numbers , Per Number			UEPDC	ND5	0.00										
	Reserve Non-Consecutive DID Nos.			UEPDC	ND6	0.00	0.00	0.00								
	Reserve DID Numbers			UEPDC	NDV	0.00	0.00	0.00								
	Dedicated DS1 (Interoffice Channel Mileage) - FX/FCO for 4-Wire DS1 Digital Loop with 4-Wire DDITS Trunk Port															
	Interoffice Channel Mileage - Fixed rate 0-8 miles (Facilities Termination)			UEPDC	1LNO1	71.29	217.17	163.75	0.00	0.00			19.99	19.99		
	Interoffice Channel Mileage - Additional rate per mile - 0-8 miles			UEPDC	1LNOA	0.5753	0.00	0.00								
	Interoffice Channel Mileage - Fixed rate 9-25 miles (Facilities Termination)			UEPDC	1LNO2	0.00	0.00	0.00								
	Interoffice Channel Mileage - Additional rate per mile - 9-25 miles			UEPDC	1LNOB	0.5753	0.00	0.00								
	Interoffice Channel Mileage - Fixed rate 25+ miles (Facilities Termination)			UEPDC	1LNO3	0.00	0.00	0.00	0.00							
	Interoffice Channel Mileage - Additional rate per mile - 25+ miles			UEPDC	1LNOC	0.5753	0.00	0.00								
	Local Number Portability, per DS0 Activated			UEPDC	LNPCP	3.15	0.00	0.00	0.00							
	Central Office Termininating Point			UEPDC	CTG	0.00										
	4-WIRE DS1 LOOP WITH CHANNELIZATION WITH PORT															
	System is 1 DS1 Loop, 1 D4 Channel Bank, and up to 24 Feature Activations															
	Each System can have up to 24 combinations of rates depending on type and number of ports used															
	UNE DS1 Loop															
	4-Wire DS1 Loop - UNE Zone 1		1	UEPMG	USLDC	47.54	0.00	0.00								
	4-Wire DS1 Loop - UNE Zone 2		2	UEPMG	USLDC	84.27	0.00	0.00								
	4-Wire DS1 Loop - UNE Zone 3		3	UEPMG	USLDC	134.14	0.00	0.00								

UNBUNDLED NETWORK ELEMENTS - North Carolina

CATEGORY	RATE ELEMENTS	Interim	Zone	BCS	USOC	RATES ($) Rec	Nonrecurring First	Nonrecurring Add'l	Nonrecurring Disconnect First	Nonrecurring Disconnect Add'l	Svc Order Submitted Elec per LSR	Svc Order Submitted Manually per LSR	Attachment: 2 Incremental Charge - Manual Svc Order vs. Electronic-1st	Attachment: 2 Incremental Charge - Manual Svc Order vs. Electronic-Add'l	Exhibit: B Incremental Charge - Manual Svc Order vs. Electronic-Disc 1st	Exhibit: B Incremental Charge - Manual Svc Order vs. Electronic-Disc Add'l
											OSS Rates($)					
											SOMEC	SOMAN	SOMAN	SOMAN	SOMAN	SOMAN
	UNE DSO Channelization Capacities (D4 Channel Bank Configurations)															
	24 DSO Channel Capacity - 1 per DS1			UEPMG	VUM24	123.06	0.00	0.00					19.99	19.99		
	48 DSO Channel Capacity - 1 per 2 DS1s			UEPMG	VUM48	246.12	0.00	0.00					19.99	19.99		
	96 DSO Channel Capacity -1per 4 DS1s			UEPMG	VUM96	492.24	0.00	0.00					19.99	19.99		
	144 DS0 Channel Capacity - 1 per 6 DS1s			UEPMG	VUM14	738.36	0.00	0.00					19.99	19.99		
	192 DS0 Channel Capacity -1 per 8 DS1s			UEPMG	VUM19	984.48	0.00	0.00					19.99	19.99		
	240 DS0 Channel Capacity - 1 per 10 DS1s			UEPMG	VUM2O	1,230.60	0.00	0.00					19.99	19.99		
	288 DS0 Channel Capacity - 1 per 12 DS1s			UEPMG	VUM28	1,476.72	0.00	0.00					19.99	19.99		
	384 DS0 Channel Capacity - 1 per 16 DS1s			UEPMG	VUM38	1,968.96	0.00	0.00					19.99	19.99		
	480 DS0 Channel Capacity - 1 per 20 DS1s			UEPMG	VUM4O	2,461.20	0.00	0.00					19.99	19.99		
	576 DS0 Channel Capacity -1 per 24 DS1s			UEPMG	VUM57	2,953.44	0.00	0.00					19.99	19.99		
	672 DS0 Channel Capacity - 1 per 28 DS1s			UEPMG	VUM67	3,445.68	0.00	0.00					19.99	19.99		
	Non-Recurring Charges (NRC) Associated with 4-Wire DS1 Loop with Channeliztion with Port - Conversion Charge Based on a System															
	A Minimum System configuration is One (1) DS1, One (1) D4 Channel Bank, and Up To 24 DSO Ports with Feature Activations.															
	Multiples of this configuration functioning as one are considered Add'l after the minimum system configuration is counted.															
	NRC - Conversion (Currently Combined) with or without BellSouth Allowed Changes			UEPMG	USAC4	0.00	330.61	16.64					19.99	19.99		
	System Additions at End User Locations Where 4-Wire DS1 Loop with Channelization with Port Combination Currently Exists and															
	New (Not Currently Combined) in all states, except in Density Zone 1 of Top 8 MSA's															
	1 DS1/D4 Channel Bank - Additionally Add NRC for each Port and Assoc Fea Activation			UEPMG	VUMD4	0.00	743.74	326.22	149.02	17.68			19.99	19.99		
	Bipolar 8 Zero Substitution															
	Clear Channel Capability Format, superframe - Subsequent Activity Only			UEPMG	CCOSF	0.00	0.00	615.00								
	Clear Channel Capability Format - Extended Superframe - Subsequent Activity Only			UEPMG	CCOEF	0.00	0.00	615.00								
	Alternate Mark Inversion (AMI)															
	Superframe Format			UEPMG	MCOSF	0.00	0.00	0.00								
	Extended Superframe Format			UEPMG	MCOPO	0.00	0.00	0.00								
	Exchange Ports Associated with 4-Wire DS1 Loop with Channelization with Port															
	Exchange Ports															
	Line Side Combination Channelized PBX Trunk Port - Business			UEPPX	UEPCX	2.28	0.00	0.00	0.00	0.00			40.18	9.45		
	Line Side Outward Channelized PBX Trunk Port - Business			UEPPX	UEPOX	2.28	0.00	0.00	0.00	0.00			40.18	9.45		
	Line Side Inward Only Channelized PBX Trunk Port without DID			UEPPX	UEP1X	2.28	0.00	0.00	0.00	0.00			40.18	9.45		
	2-Wire Trunk Side Unbundled Channelized DID Trunk Port			UEPPX	UEPDM	13.26	0.00	0.00	0.00	0.00			40.18	9.45		
	Feature Activations - Unbundled Loop Concentration															
	Feature (Service) Activation for each Line Port Terminated in D4 Bank			UEPPX	1PQWM	0.65	25.27	13.34	4.15	4.12			40.18	9.45		
	Feature (Service) Activation for each Trunk Port Terminated in D4 Bank			UEPPX	1PQWU	0.65	77.75	18.33	58.74	11.48			40.18	9.45		
	Telephone Number/ Group Establishment Charges for DID Service															
	DID Trunk Termination (1 per Port)			UEPPX	NDT	0.00	0.00	0.00								
	Estab Trk Grp and Provide 1st 20 DID Nos. (FL,GA, NC,& SC)			UEPPX	NDZ	0.00	0.00	0.00								
	DID Numbers - groups of 20 - Valid all States			UEPPX	ND4	0.00	0.00	0.00								
	Non-Consecutive DID Numbers - per number			UEPPX	ND5	0.00	0.00	0.00								
	Reserve Non-Consecutive DID Numbers			UEPPX	ND6	0.00	0.00	0.00								
	Reserve DID Numbers			UEPPX	NDV	0.00	0.00	0.00								
	Local Number Portability															
	Local Number Portability - 1 per port			UEPPX	LNPCP	3.15	0.00	0.00								
	FEATURES - Vertical and Optional															
	Local Switching Features Offered with Line Side Ports Only															
	All Features Available			UEPPX	UEPVF	3.40	0.00	0.00					40.18	9.45		
UNBUNDLED PORT LOOP COMBINATIONS - MARKET RATES																
	Market Rates shall apply where BellSouth is not required to provide unbundled local switching or switch ports per FCC and/or State Commission rules.															
	This includes:															
	Unbundled port/loop combinations that are Currently Combined or Not Currently Combined in Zone 1 of the Top 8 MSAS in BellSouth's region for end users with 4 or more DS0 equivalent lines.															
	The Top 8 MSAs in BellSouth's region are: FL (Orlando, Ft. Lauderdale, Miami); GA (Atlanta); LA (New Orleans); NC (Greensboro-Winston Salem-Highpoint/Charlotte-Gastonia-Rock Hill); TN (Nashville).															

UNBUNDLED NETWORK ELEMENTS - North Carolina													Attachment: 2		Exhibit: B	
CATEGORY	RATE ELEMENTS	Interim	Zone	BCS	USOC	RATES ($)					Svc Order Submitted Elec per LSR	Svc Order Submitted Manually per LSR	Incremental Charge - Manual Svc Order vs. Electronic-1st	Incremental Charge - Manual Svc Order vs. Electronic-Add'l	Incremental Charge - Manual Svc Order vs. Electronic-Disc 1st	Incremental Charge - Manual Svc Order vs. Electronic-Disc Add'l
						Rec	Nonrecurring		Nonrecurring Disconnect		OSS Rates($)					
							First	Add'l	First	Add'l	SOMEC	SOMAN	SOMAN	SOMAN	SOMAN	SOMAN
	BellSouth currently is developing the billing capability to mechanically bill the recurring and non-recurring Market Rates in this section except for nonrecurring charges for not currently combined in FL and NC. In the interim where BellSouth cannot bill Market Rates, BellSouth shall bill the rates in the Cost-Based section preceding in lieu of the Market Rates and reserves the right to true-up the billing difference.															
	The Market Rate for unbundled ports includes all available features in all states.															
	End Office and Tandem Switching Usage and Common Transport Usage rates in the Port section of this rate exhibit shall apply to all combinations of loop/port network elements except for UNE Coin Port/Loop Combinations which have a flat rate usage charge (USOC: URECU).															
	For Not Currently Combined scenarios the Nonrecurring charges are listed in the First and Additional NRC columns for each Port USOC. For Currently Combined scenarios, the Nonrecurring charges are listed in the NRC - Currently Combined section. Additional NRCs may apply also and are categorized accordingly.															
	2-WIRE VOICE GRADE LOOP WITH 2-WIRE LINE PORT (RES)															
	UNE Port/Loop Combination Rates															
	2-Wire VG Loop/Port Combo - Zone 1		1			24.75										
	2-Wire VG Loop/Port Combo - Zone 2		2			33.05										
	2-Wire VG Loop/Port Combo - Zone 3		3			44.33										
	UNE Loop Rates															
	2-Wire Voice Grade Loop (SL1) - Zone 1		1	UEPRX	UEPLX	10.75										
	2-Wire Voice Grade Loop (SL1) - Zone 2		2	UEPRX	UEPLX	19.05										
	2-Wire Voice Grade Loop (SL1) - Zone 3		3	UEPRX	UEPLX	30.33										
	2-Wire Voice Grade Line Port (Res)															
	2-Wire voice unbundled port - residence			UEPRX	UEPRL	14.00	90.00	90.00					40.18	9.45		
	2-Wire voice unbundled port with Caller ID - res			UEPRX	UEPRC	14.00	90.00	90.00					40.18	9.45		
	2-Wire voice unbundled port outgoing only - res			UEPRX	UEPRO	14.00	90.00	90.00					40.18	9.45		
	2-Wire voice unbundles res, low usage line port with Caller ID (LUM)			UEPRX	UEPAP	14.00	90.00	90.00					40.18	9.45		
	2-Wire voice unbundled Low Usage Line Port without Caller ID Capability			UEPRX	UEPRT	14.00	90.00	90.00					40.18	9.45		
	LOCAL NUMBER PORTABILITY															
	Local Number Portability (1 per port)			UEPRX	LNPCX	0.35										
	FEATURES															
	All Features Offered			UEPRX	UEPVF	0.00	0.00	0.00					40.18	9.45		
	NONRECURRING CHARGES - CURRENTLY COMBINED															
	2-Wire Voice Grade Loop / Line Port Combination - Switch-as-is			UEPRX	USAC2		41.50	41.50					40.18	9.45		
	2-Wire Voice Grade Loop / Line Port Combination - Switch with change			UEPRX	USACC		41.50	41.50					40.18	9.45		
	ADDITIONAL NRCs															
	NRC - 2-Wire Voice Grade Loop/Line Port Combination - Subsequent			UEPRX	USAS2		0.00	0.00					40.18	9.45		
	2-WIRE VOICE GRADE LOOP WITH 2-WIRE LINE PORT (BUS)															
	UNE Port/Loop Combination Rates															
	2-Wire VG Loop/Port Combo - Zone 1		1			24.75										
	2-Wire VG Loop/Port Combo - Zone 2		2			33.05										
	2-Wire VG Loop/Port Combo - Zone 3		3			44.33										
	UNE Loop Rates															
	2-Wire Voice Grade Loop (SL1) - Zone 1		1	UEPBX	UEPLX	10.75										
	2-Wire Voice Grade Loop (SL1) - Zone 2		2	UEPBX	UEPLX	19.05										
	2-Wire Voice Grade Loop (SL1) - Zone 3		3	UEPBX	UEPLX	30.33										
	2-Wire Voice Grade Line Port (Bus)															
	2-Wire voice unbundled port without Caller ID - bus			UEPBX	UEPBL	14.00	90.00	90.00					40.18	9.45		
	2-Wire voice unbundled port with Caller + E484 ID - bus			UEPBX	UEPBC	14.00	90.00	90.00					40.18	9.45		
	2-Wire voice unbundled port outgoing only - bus			UEPBX	UEPBO	14.00	90.00	90.00					40.18	9.45		
	2-Wire voice unbundled Incoming Only Port without Caller ID Capability			UEPBX	UEPBE	14.00	90.00	90.00					40.18	9.45		
	LOCAL NUMBER PORTABILITY															
	Local Number Portability (1 per port)			UEPBX	LNPCX	0.35										
	FEATURES															
	All Features Offered			UEPBX	UEPVF	0.00	0.00	0.00					40.18	9.45		
	NONRECURRING CHARGES - CURRENTLY COMBINED															
	2-Wire Voice Grade Loop / Line Port Combination - Switch-as-is			UEPBX	USAC2		41.50	41.50					40.18	9.45		

CATEGORY	RATE ELEMENTS	Interim	Zone	BCS	USOC	RATES ($)					Svc Order Submitted Elec per LSR	Svc Order Submitted Manually per LSR	Attachment: 2 Incremental Charge - Manual Svc Order vs. Electronic-1st	Attachment: 2 Incremental Charge - Manual Svc Order vs. Electronic-Add'l	Exhibit: B Incremental Charge - Manual Svc Order vs. Electronic-Disc 1st	Exhibit: B Incremental Charge - Manual Svc Order vs. Electronic-Disc Add'l
						Rec	Nonrecurring		Nonrecurring Disconnect		OSS Rates($)					
							First	Add'l	First	Add'l	SOMEC	SOMAN	SOMAN	SOMAN	SOMAN	SOMAN
	2-Wire Voice Grade Loop / Line Port Combination - Switch with change			UEPBX	USACC		41.50	41.50					40.18	9.45		
ADDITIONAL NRCs																
	NRC - 2-Wire Voice Grade Loop/Line Port Combination - Subsequent			UEPBX	USAS2		0.00	0.00					40.18	9.45		
2-WIRE VOICE GRADE LOOP WITH 2-WIRE LINE PORT (RES - PBX)																
UNE Port/Loop Combination Rates																
	2-Wire VG Loop/Port Combo - Zone 1		1			24.75										
	2-Wire VG Loop/Port Combo - Zone 2		2			33.05										
	2-Wire VG Loop/Port Combo - Zone 3		3			44.33										
UNE Loop Rates																
	2-Wire Voice Grade Loop (SL1) - Zone 1		1	UEPRG	UEPLX	10.75										
	2-Wire Voice Grade Loop (SL1) - Zone 2		2	UEPRG	UEPLX	19.05										
	2-Wire Voice Grade Loop (SL1) - Zone 3		3	UEPRG	UEPLX	30.33										
2-Wire Voice Grade Line Port Rates (RES - PBX)																
	2-Wire VG Unbundled Combination 2-Way PBX Trunk Port - Res			UEPRG	UEPRD	14.00	90.00	90.00					40.18	9.45		
LOCAL NUMBER PORTABILITY																
	Local Number Portability (1 per port)			UEPRG	LNPCP	3.15	0.00	0.00								
FEATURES																
	All Features Offered			UEPRG	UEPVF	0.00	0.00	0.00					40.18	9.45		
NONRECURRING CHARGES - CURRENTLY COMBINED																
	2-Wire Voice Grade Loop/ Line Port Combination - Switch-As-Is			UEPRG	USAC2		41.50	41.50					40.18	9.45		
	2-Wire Voice Grade Loop/ Line Port Combination - Switch with Change			UEPRG	USACC		41.50	41.50					40.18	9.45		
ADDITIONAL NRCs																
	2 Wire Loop/Line Side Port Combination - Non feature - Subsequent Activity- Nonrecurring						0.00	0.00					40.18	9.45		
	PBX Subsequent Activity - Change/Rearrange Multiline Hunt Group						14.64	14.64					40.18	9.45		
2-WIRE VOICE GRADE LOOP WITH 2-WIRE LINE PORT (BUS - PBX)																
UNE Port/Loop Combination Rates																
	2-Wire VG Loop/Port Combo - Zone 1		1			24.75										
	2-Wire VG Loop/Port Combo - Zone 2		2			33.05										
	2-Wire VG Loop/Port Combo - Zone 3		3			44.33										
UNE Loop Rates																
	2-Wire Voice Grade Loop (SL1) - Zone 1		1	UEPPX	UEPLX	10.75										
	2-Wire Voice Grade Loop (SL1) - Zone 2		2	UEPPX	UEPLX	19.05										
	2-Wire Voice Grade Loop (SL1) - Zone 3		3	UEPPX	UEPLX	30.33										
2-Wire Voice Grade Line Port Rates (BUS - PBX)																
	Line Side Unbundled Combination 2-Way PBX Trunk Port - Bus			UEPPX	UEPPC	14.00	90.00	90.00					40.18	9.45		
	Line Side Unbundled Outward PBX Trunk Port - Bus			UEPPX	UEPPO	14.00	90.00	90.00					40.18	9.45		
	Line Side Unbundled Incoming PBX Trunk Port - Bus			UEPPX	UEPP1	14.00	90.00	90.00					40.18	9.45		
	2-Wire Voice Unbundled PBX LD Terminal Ports			UEPPX	UEPLD	14.00	90.00	90.00					40.18	9.45		
	2-Wire Voice Unbundled 2-Way Combination PBX Usage Port			UEPPX	UEPXA	14.00	90.00	90.00					40.18	9.45		
	2-Wire Voice Unbundled PBX Toll Terminal Hotel Ports			UEPPX	UEPXB	14.00	90.00	90.00					40.18	9.45		
	2-Wire Voice Unbundled PBX LD DDD Terminals Port			UEPPX	UEPXC	14.00	90.00	90.00					40.18	9.45		
	2-Wire Voice Unbundled PBX LD Terminal Switchboard Port			UEPPX	UEPXD	14.00	90.00	90.00					40.18	9.45		
	2-Wire Voice Unbundled PBX LD Terminal Switchboard IDD Capable Port			UEPPX	UEPXE	14.00	90.00	90.00					40.18	9.45		
	2-Wire Voice Unbundled 2-Way PBX Hotel/Hospital Economy Administrative Calling Port			UEPPX	UEPXL	14.00	90.00	90.00					40.18	9.45		
	2-Wire Voice Unbundled 2-Way PBX Hotel/Hospital Economy Room Calling Port			UEPPX	UEPXM	14.00	90.00	90.00					40.18	9.45		
	2-Wire Voice Unbundled 1-Way Outgoing PBX Hotel/Hospital Discount Room Calling Port			UEPPX	UEPXO	14.00	90.00	90.00					40.18	9.45		
	2-Wire Voice Unbundled 1-Way Outgoing PBX Measured Port			UEPPX	UEPXS	14.00	90.00	90.00					40.18	9.45		

UNBUNDLED NETWORK ELEMENTS - North Carolina													Attachment: 2		Exhibit: B	
CATEGORY	RATE ELEMENTS	Interim	Zone	BCS	USOC	RATES ($)					Svc Order Submitted Elec per LSR	Svc Order Submitted Manually per LSR	Incremental Charge - Manual Svc Order vs. Electronic-1st	Incremental Charge - Manual Svc Order vs. Electronic-Add'l	Incremental Charge - Manual Svc Order vs. Electronic-Disc 1st	Incremental Charge - Manual Svc Order vs. Electronic-Disc Add'l
						Rec	Nonrecurring		Nonrecurring Disconnect		OSS Rates($)					
							First	Add'l	First	Add'l	SOMEC	SOMAN	SOMAN	SOMAN	SOMAN	SOMAN
LOCAL NUMBER PORTABILITY																
	Local Number Portability (1 per port)			UEPPX	LNPCP	3.15	0.00	0.00								
FEATURES																
	All Features Offered			UEPPX	UEPVF	0.00	0.00	0.00					40.18	9.45		
NONRECURRING CHARGES - CURRENTLY COMBINED																
	2-Wire Voice Grade Loop/ Line Port Combination - Switch-As-Is			UEPPX	USAC2		41.50	41.50					40.18	9.45		
	2-Wire Voice Grade Loop/ Line Port Combination - Switch with Change			UEPPX	USACC		41.50	41.50					40.18	9.45		
ADDITIONAL NRCs																
	2-Wire Voice Grade Loop/ Line Port Combination - Subsequent			UEPPX	USAS2		0.00	0.00					40.18	9.45		
	2 Wire Loop/Line Side Port Combination - Non feature - Subsequent Activity- Nonrecurring						0.00	0.00					40.18	9.45		
	PBX Subsequent Activity - Change/Rearrange Multiline Hunt Group						14.64	14.64					40.18	9.45		
2-WIRE VOICE GRADE LOOP WITH 2-WIRE ANALOG LINE COIN PORT																
UNE Port/Loop Combination Rates																
	2-Wire VG Coin Port/Loop Combo – Zone 1		1			24.75										
	2-Wire VG Coin Port/Loop Combo – Zone 2		2			33.05										
	2-Wire VG Coin Port/Loop Combo – Zone 3		3			44.33										
UNE Loop Rates																
	2-Wire Voice Grade Loop (SL1) - Zone 1		1	UEPCO	UEPLX	10.75										
	2-Wire Voice Grade Loop (SL1) - Zone 2		2	UEPCO	UEPLX	19.05										
	2-Wire Voice Grade Loop (SL1) - Zone 3		3	UEPCO	UEPLX	30.33										
2-Wire Voice Grade Line Port Rates (Coin)																
	2-Wire Coin 2-Way without Operator Screening and without Blocking (NC)			UEPCO	UEPND	14.00	90.00	90.00					40.18	9.45		
	2-Wire Coin 2-Way with Operator Screening (NC)			UEPCO	UEPNC	14.00	90.00	90.00					40.18	9.45		
	2-Wire Coin 2-Way with Operator Screening and Blocking: 011, 900/976, 1+DDD (NC, TN)			UEPCO	UEPRP	14.00	90.00	90.00					40.18	9.45		
	2-Wire Coin 2-Way with Operator Screening and 011 Blocking (NC)			UEPCO	UEPNB	14.00	90.00	90.00					40.18	9.45		
	2-Wire Coin 2-Way with Operator Screening and Blocking: 900/976, 1+DDD, 011+, and Local (NC, TN)			UEPCO	UEPCA	14.00	90.00	90.00					40.18	9.45		
	2-Wire Coin Outward with Operator Screening and 011 Blocking (NC)			UEPCO	UEPNE	14.00	90.00	90.00					40.18	9.45		
	2-Wire Coin Outward with Operator Screening and Blocking: 900/976, 1+DDD, 011+, and Local (NC)			UEPCO	UEPCL	14.00	90.00	90.00					40.18	9.45		
LOCAL NUMBER PORTABILITY																
	Local Number Portability (1 per port)			UEPCO	LNPCX	0.35										
NONRECURRING CHARGES - CURRENTLY COMBINED																
	2-Wire Voice Grade Loop/ Line Port Combination - Switch-As-Is			UEPCO	USAC2		41.50	41.50					40.18	9.45		
	2-Wire Voice Grade Loop/ Line Port Combination - Switch with Change			UEPCO	USACC		41.50	41.50					40.18	9.45		
ADDITIONAL NRCs																
	2-Wire Voice Grade Loop/ Line Port Combination - Subsequent			UEPCO	USAS2		0.00	0.00					40.18	9.45		
2-WIRE VOICE LOOP/ 2WIRE VOICE GRADE IO TRANSPORT/ 2-WIRE LINE PORT (RES)																
UNE Port/Loop Combination Rates																
UNE Loop Rates																
2-Wire Voice Grade Line Port Rates (Res)																
	2-Wire voice unbundled port - residence			UEPFR	UEPRL	14.00	225.00	170.00					40.18	9.45		
	2-Wire voice unbundled port with Caller ID - res			UEPFR	UEPRC	14.00	225.00	170.00					40.18	9.45		
	2-Wire voice unbundled port outgoing only - res			UEPFR	UEPRO	14.00	225.00	170.00					40.18	9.45		
	2-Wire voice unbundles res, low usage line port with Caller ID (LUM)			UEPFR	UEPAP	14.00	225.00	170.00					40.18	9.45		
INTEROFFICE TRANSPORT																

CATEGORY	RATE ELEMENTS	Interim	Zone	BCS	USOC	RATES ($)					Svc Order Submitted Elec per LSR	Svc Order Submitted Manually per LSR	Attachment: 2 Incremental Charge - Manual Svc Order vs. Electronic-1st	Attachment: 2 Incremental Charge - Manual Svc Order vs. Electronic-Add'l	Exhibit: B Incremental Charge - Manual Svc Order vs. Electronic-Disc 1st	Exhibit: B Incremental Charge - Manual Svc Order vs. Electronic-Disc Add'l
						Rec	Nonrecurring		Nonrecurring Disconnect		OSS Rates($)					
							First	Add'l	First	Add'l	SOMEC	SOMAN	SOMAN	SOMAN	SOMAN	SOMAN
	Interoffice Transport - Dedicated - 2 Wire Voice Grade - Facility Termination			UEPFR	U1TV2	18.00	140.00	71.00								
	Interoffice Transport - Dedicated - 2 Wire Voice Grade - Per Mile or Fraction Mile			UEPFR	1L5XX	0.0125										
FEATURES																
	All Features Offered			UEPFR	UEPVF	0.00	0.00	0.00					40.18	9.45		
LOCAL NUMBER PORTABILITY																
	Local Number Portability (1 per port)			UEPFR	LNPCX	0.35										
NONRECURRING CHARGES (NRCs) - CURRENTLY COMBINED																
	2-Wire Loop / Dedicated IO Transport / 2 Wire Line Port Combination - Conversion - Switch-as-is			UEPFR	USAC2		9.03	1.87					40.18	9.45		
	2-Wire Loop / Dedicated IO Transport / 2 Wire Line Port Combination - Conversion - Switch-With-Change			UEPFR	USACC		9.03	1.87					40.18	9.45		
2-WIRE VOICE LOOP/ 2WIRE VOICE GRADE IO TRANSPORT/ 2-WIRE LINE PORT (BUS)																
UNE Port/Loop Combination Rates																
UNE Loop Rates																
2-Wire Voice Grade Line Port (Bus)																
	2-Wire voice unbundled port without Caller ID - bus			UEPFB	UEPBL	14.00	225.00	170.00					40.18	9.45		
	2-Wire voice unbundled port with Caller + E484 ID - bus			UEPFB	UEPBC	14.00	225.00	170.00					40.18	9.45		
	2-Wire voice unbundled port outgoing only - bus			UEPFB	UEPBO	14.00	225.00	170.00					40.18	9.45		
	2-Wire voice unbundled incoming only port with Caller ID - Bus			UEPFB	UEPB1	14.00	225.00	170.00					40.18	9.45		
LOCAL NUMBER PORTABILITY																
	Local Number Portability (1 per port)			UEPFB	LNPCX	0.35										
INTEROFFICE TRANSPORT																
	Interoffice Transport - Dedicated - 2 Wire Voice Grade - Facility Termination			UEPFB	U1TV2											
	Interoffice Transport - Dedicated - 2 Wire Voice Grade - Per Mile or Fraction Mile			UEPFB	1L5XX											
FEATURES																
	All Features Offered			UEPFB	UEPVF	0.00	0.00	0.00					40.18	9.45		
NONRECURRING CHARGES (NRCs) - CURRENTLY COMBINED																
	2-Wire Loop / Dedicated IO Transport / 2 Wire Line Port Combination - Conversion - Switch-as-is			UEPFB	USAC2		9.03	1.87					40.18	9.45		
	2-Wire Loop / Dedicated IO Transport / 2 Wire Line Port Combination - Conversion - Switch with change			UEPFB	USACC		9.03	1.87					40.18	9.45		
2-WIRE VOICE GRADE LOOP WITH 2-WIRE LINE PORT (BUS - PBX)																
UNE Port/Loop Combination Rates																
UNE Loop Rates																
2-Wire Voice Grade Line Port Rates (BUS - PBX)																
	Line Side Unbundled Combination 2-Way PBX Trunk Port - Bus			UEPFP	UEPPC	14.00	225.00	170.00					40.18	9.45		
	Line Side Unbundled Outward PBX Trunk Port - Bus			UEPFP	UEPPO	14.00	225.00	170.00					40.18	9.45		
	Line Side Unbundled Incoming PBX Trunk Port - Bus			UEPFP	UEPP1	14.00	225.00	170.00					40.18	9.45		
	2-Wire Voice Unbundled PBX LD Terminal Ports			UEPFP	UEPLD	14.00	225.00	170.00					40.18	9.45		
	2-Wire Voice Unbundled 2-Way Combination PBX Usage Port			UEPFP	UEPXA	14.00	225.00	170.00					40.18	9.45		
	2-Wire Voice Unbundled PBX Toll Terminal Hotel Ports			UEPFP	UEPXB	14.00	225.00	170.00					40.18	9.45		
	2-Wire Voice Unbundled PBX LD DDD Terminals Port			UEPFP	UEPXC	14.00	225.00	170.00					40.18	9.45		
	2-Wire Voice Unbundled PBX LD Terminal Switchboard Port			UEPFP	UEPXD	14.00	225.00	170.00					40.18	9.45		
	2-Wire Voice Unbundled PBX LD Terminal Switchboard IDD Capable Port			UEPFP	UEPXE	14.00	225.00	170.00					40.18	9.45		
	2-Wire Voice Unbundled 2-Way PBX Hotel/Hospital Economy Administrative Calling Port			UEPFP	UEPXL	14.00	225.00	170.00					40.18	9.45		
	2-Wire Voice Unbundled 2-Way PBX Hotel/Hospital Economy Room Calling Port			UEPFP	UEPXM	14.00	225.00	170.00					40.18	9.45		
	2-Wire Voice Unbundled 1-Way Outgoing PBX Hotel/Hospital Discount Room Calling Port			UEPFP	UEPXO	14.00	225.00	170.00					40.18	9.45		
	2-Wire Voice Unbundled 1-Way Outgoing PBX Measured Port			UEPFP	UEPXS	14.00	225.00	170.00					40.18	9.45		
LOCAL NUMBER PORTABILITY																
	Local Number Portability (1 per port)			UEPFP	LNPCP	3.15	0.00	0.00					40.18	9.45		

UNBUNDLED NETWORK ELEMENTS - North Carolina													Attachment: 2		Exhibit: B	
CATEGORY	RATE ELEMENTS	Interim	Zone	BCS	USOC	RATES ($)					Svc Order Submitted Elec per LSR	Svc Order Submitted Manually per LSR	Incremental Charge - Manual Svc Order vs. Electronic-1st	Incremental Charge - Manual Svc Order vs. Electronic-Add'l	Incremental Charge - Manual Svc Order vs. Electronic-Disc 1st	Incremental Charge - Manual Svc Order vs. Electronic-Disc Add'l
						Rec	Nonrecurring		Nonrecurring Disconnect		OSS Rates($)					
							First	Add'l	First	Add'l	SOMEC	SOMAN	SOMAN	SOMAN	SOMAN	SOMAN
INTEROFFICE TRANSPORT																
	Interoffice Transport - Dedicated - 2 Wire Voice Grade - Facility Termination			UEPFP	U1TV2											
	Interoffice Transport - Dedicated - 2 Wire Voice Grade - Per Mile or Fraction Mile			UEPFP	1L5XX											
FEATURES																
	All Features Offered			UEPFP	UEPVF	0.00	0.00	0.00					40.18	9.45		
NONRECURRING CHARGES (NRCs) - CURRENTLY COMBINED																
	2-Wire Loop / Dedicated IO Transport / 2 Wire Line Port Combination - Conversion - Switch-as-is			UEPFP	USAC2		9.03	1.87					40.18	9.45		
	2-Wire Loop / Dedicated IO Transport / 2 Wire Line Port Combination - Conversion - Switch with change			UEPFP	USACC		9.03	1.87					40.18	9.45		
UNBUNDLED PORT/LOOP COMBINATIONS - MARKET BASED RATES																
2-WIRE VOICE GRADE LOOP- BUS ONLY - WITH 2-WIRE DID TRUNK PORT																
UNE Port/Loop Combination Rates																
	2-Wire VG Loop/2-Wire DID Trunk Port Combo - UNE Zone 1		1			60.85										
	2-Wire VG Loop/2-Wire DID Trunk Port Combo - UNE Zone 2		2			67.68										
	2-Wire VG Loop/2-Wire DID Trunk Port Combo - UNE Zone 3		3			77.96										
UNE Loop Rates																
	2-Wire Analog Voice Grade Loop - (SL2) - UNE Zone 1		1	UEPPX	UECD1	8.85										
	2-Wire Analog Voice Grade Loop - (SL2) - UNE Zone 2		2	UEPPX	UECD1	15.68										
	2-Wire Analog Voice Grade Loop - (SL2) - UNE Zone 3		3	UEPPX	UECD1	25.96										
UNE Port Rate																
	Exchange Ports - 2-Wire DID Port			UEPPX	UEPD1	52.00	485.00	75.00					40.18	9.45		
NONRECURRING CHARGES - CURRENTLY COMBINED																
	2-Wire Voice Grade Loop / 2-Wire DID Trunk Port Combination - Switch-As-Is Top 8 MSAs only			UEPPX	USAC1		200.00	75.00					53.89	11.34		
	2-Wire Voice Grade Loop / 2-Wire DID Trunk Port Conversion with BellSouth Allowable Changes Top 8 MSAs only			UEPPX	USA1C		200.00	75.00					53.89	11.34		
ADDITIONAL NRCs																
	2-Wire DID Subsequent Activity - Add Trunks, Per Trunk			UEPPX	USAS1		75.00						40.18	9.45		
Telephone Number/Trunk Group Establisment Charges																
	DID Trunk Termination (One Per Port)			UEPPX	NDT	0.00	0.00	0.00								
	DID Numbers, Establish Trunk Group and Provide First Group of 20 DID Numbers			UEPPX	NDZ	0.00	0.00	0.00								
	Additional DID Numbers for each Group of 20 DID Numbers			UEPPX	ND4	0.00	0.00	0.00								
	DID Numbers, Non- consecutive DID Numbers , Per Number			UEPPX	ND5	0.00	0.00	0.00								
	Reserve Non-Consecutive DID numbers			UEPPX	ND6	0.00	0.00	0.00								
	Reserve DID Numbers			UEPPX	NDV	0.00	0.00	0.00								
LOCAL NUMBER PORTABILITY																
	Local Number Portability (1 per port)			UEPPX	LNPCP	3.15	0.00	0.00								
2-WIRE ISDN DIGITAL GRADE LOOP WITH 2-WIRE ISDN DIGITAL LINE SIDE PORT																
UNE Port/Loop Combination Rates																
	2W ISDN Digital Grade Loop/2W ISDN Digital Line Side Port - UNE Zone 1		1	UEPPB UEPPR		79.47										
	2W ISDN Digital Grade Loop/2W ISDN Digital Line Side Port - UNE Zone 2		2	UEPPB UEPPR		90.64										
	2W ISDN Digital Grade Loop/2W ISDN Digital Line Side Port - UNE Zone 3		3	UEPPB UEPPR		105.81										
UNE Loop Rates																
	2-Wire ISDN Digital Grade Loop - UNE Zone 1		1	UEPPB UEPPR	USL2X	14.47										
	2-Wire ISDN Digital Grade Loop - UNE Zone 2		2	UEPPB UEPPR	USL2X	25.64										
	2-Wire ISDN Digital Grade Loop - UNE Zone 3		3	UEPPB UEPPR	USL2X	40.81										
UNE Port Rate																
	Exchange Port - 2-Wire ISDN Line Side Port			UEPPB UEPPR	UEPPB	65.00	450.00	375.00					19.99	19.99		
NONRECURRING CHARGES - CURRENTLY COMBINED																
	2-Wire ISDN Digital Grade Loop / 2-Wire ISDN Line Side Port Combination - Conversion - Top 8 MSAs only			UEPPB UEPPR	USACB	0.00	200.00	200.00								

UNBUNDLED NETWORK ELEMENTS - North Carolina

CATEGORY	RATE ELEMENTS	Interim	Zone	BCS	USOC	RATES ($) Rec	Nonrecurring First	Nonrecurring Add'l	Nonrecurring Disconnect First	Nonrecurring Disconnect Add'l	Svc Order Submitted Elec per LSR SOMEC	Svc Order Submitted Manually per LSR SOMAN	Attachment: 2 Incremental Charge - Manual Svc Order vs. Electronic-1st SOMAN	Attachment: 2 Incremental Charge - Manual Svc Order vs. Electronic-Add'l SOMAN	Exhibit: B Incremental Charge - Manual Svc Order vs. Electronic-Disc 1st SOMAN	Exhibit: B Incremental Charge - Manual Svc Order vs. Electronic-Disc Add'l SOMAN
							OSS Rates($)									
	ADDITIONAL NRCs															
	LOCAL NUMBER PORTABILITY															
	Local Number Portability (1 per port)			UEPPB UEPPR	LNPCX	0.35	0.00	0.00								
	B-CHANNEL USER PROFILE ACCESS:															
	CVS/CSD (DMS/5ESS)			UEPPB UEPPR	U1UCA	0.00	0.00	0.00								
	CVS (EWSD)			UEPPB UEPPR	U1UCB	0.00	0.00	0.00								
	CSD			UEPPB UEPPR	U1UCC	0.00	0.00	0.00								
	B-CHANNEL AREA PLUS USER PROFILE ACCESS: (AL,KY,LA,MS SC,MS, & TN)															
	USER TERMINAL PROFILE															
	User Terminal Profile (EWSD only)			UEPPB UEPPR	U1UMA	0.00	0.00	0.00								
	VERTICAL FEATURES															
	All Vertical Features - One per Channel B User Profile			UEPPB UEPPR	UEPVF	3.40	0.00	0.00					19.99	19.99		
	INTEROFFICE CHANNEL MILEAGE															
	Interoffice Channel mileage each, including first mile and facilities termination			UEPPB UEPPR	M1GNC	18.0282	137.48	52.58					19.99	19.99		
	Interoffice Channel mileage each, additional mile			UEPPB UEPPR	M1GNM	0.0282	0.00	0.00								
	4-WIRE DS1 DIGITAL LOOP WITH 4-WIRE ISDN DS1 DIGITAL TRUNK PORT															
	UNE Port/Loop Combination Rates															
	4W DS1 Digital Loop/4W ISDN DS1 Digital Trunk Port - UNE Zone 1		1	UEPPP		947.54										
	4W DS1 Digital Loop/4W ISDN DS1 Digital Trunk Port - UNE Zone 2		2	UEPPP		984.27										
	4W DS1 Digital Loop/4W ISDN DS1 Digital Trunk Port - UNE Zone 3		3	UEPPP		1,034.14										
	UNE Loop Rates															
	4-Wire DS1 Digital Loop - UNE Zone 1		1	UEPPP	USL4P	47.54										
	4-Wire DS1 Digital Loop - UNE Zone 2		2	UEPPP	USL4P	84.27										
	4-Wire DS1 Digital Loop - UNE Zone 3		3	UEPPP	USL4P	134.14										
	UNE Port Rate															
	Exchange Ports - 4-Wire ISDN DS1 Port			UEPPP	UEPPP	900.00	1,150.00	1,150.00					19.99	19.99		
	NONRECURRING CHARGES - CURRENTLY COMBINED															
	4-Wire DS1 Digital Loop / 4-Wire ISDN DS1 Digital Trunk Port Combination - Conversion -Switch-As-Is Top 8 MSAs only			UEPPP	USACP	0.00	925.00	925.00								
	ADDITIONAL NRCs															
	4-Wire DS1 Loop / 4-Wire ISDN DS1 Digital Trunk Port - Subsequent Inward/2-Way Tel Nos - (NC Only)			UEPPP	PR7TG		1.17	1.17								
	4-Wire DS1 Loop/4-Wire ISDN Digital Trunk Port - Subsequent Activity Outward tel nos. (NC only)			UEPPP	PR7TP		28.17	28.17								
	4-Wire DS1 Loop / 4-Wire ISDN DS1 Digital Trk Port - Subsequent Inward Telephone Numbers			UEPPP	PR7ZT		56.33	56.33								
	LOCAL NUMBER PORTABILITY															
	Local Number Portability (1 per port)			UEPPP	LNPCN	1.75										
	INTERFACE (Provsioning Only)															
	Voice/Data			UEPPP	PR71V	0.00										
	Digital Data			UEPPP	PR71D	0.00										
	Inward Data			UEPPP	PR71E	0.00										
	New or Additional "B" Channel															
	New or Additional - Voice/Data B Channel			UEPPP	PR7BV	0.00	36.92						19.99	19.99		
	New or Additional - Digital Data B Channel			UEPPP	PR7BF	0.00	36.92						19.99	19.99		
	New or Additional Inward Data B Channel			UEPPP	PR7BD	0.00	36.92						19.99	19.99		
	CALL TYPES															
	Inward			UEPPP	PR7C1	0.00										
	Outward			UEPPP	PR7CO	0.00										
	Two-way			UEPPP	PR7CC	0.00										
	Interoffice Channel Mileage															
	Fixed Each Including First Mile			UEPPP	1LN1A	71.8653	217.17	163.75	0.00				19.99	19.99		
	Each Airline-Fractional Additional Mile			UEPPP	1LN1B	0.5753										
	4-WIRE DS1 DIGITAL LOOP WITH 4-WIRE DDITS TRUNK PORT															
	UNE Port/Loop Combination Rates															

UNBUNDLED NETWORK ELEMENTS - North Carolina														Attachment: 2		Exhibit: B	
CATEGORY		RATE ELEMENTS	Interim	Zone	BCS	USOC	RATES ($)					Svc Order Submitted Elec per LSR	Svc Order Submitted Manually per LSR	Incremental Charge - Manual Svc Order vs. Electronic-1st	Incremental Charge - Manual Svc Order vs. Electronic-Add'l	Incremental Charge - Manual Svc Order vs. Electronic-Disc 1st	Incremental Charge - Manual Svc Order vs. Electronic-Disc Add'l
							Rec	Nonrecurring		Nonrecurring Disconnect		OSS Rates($)					
								First	Add'l	First	Add'l	SOMEC	SOMAN	SOMAN	SOMAN	SOMAN	SOMAN
		4W DS1 Digital Loop/4W DDITS Trunk Port - UNE Zone 1		1	UEPDC		797.54										
		4W DS1 Digital Loop/4W DDITS Trunk Port - UNE Zone 2		2	UEPDC		834.27										
		4W DS1 Digital Loop/4W DDITS Trunk Port - UNE Zone 3		3	UEPDC		884.14										
	UNE Loop Rates																
		4-Wire DS1 Digital Loop - UNE Zone 1		1	UEPDC	USLDC	47.54										
		4-Wire DS1 Digital Loop - UNE Zone 2		2	UEPDC	USLDC	84.27										
		4-Wire DS1 Digital Loop - UNE Zone 3		3	UEPDC	USLDC	134.14										
	UNE Port Rate																
		4-Wire DDITS Digital Trunk Port			UEPDC	UDD1T	750.00	1,050.00	480.00	0.00	0.00			19.99	19.99		
	NONRECURRING CHARGES - CURRENTLY COMBINED																
		4-Wire DS1 Digital Loop / 4-Wire DDITS Trunk Port Combination - Switch-As-Is Top 8 MSAs only			UEPDC	USAC4		288.86	133.87								
		4-Wire DS1 Digital Loop / 4-Wire DDITS Trunk Port Combination - Conversion with DS1 Changes Top 8 MSAs only			UEPDC	USAWA		288.86	133.37								
		4-Wire DS1 Digital Loop / 4-Wire DDITS Trunk Port Combination - Conversion with Change - Trunk Top 8 MSAs only			UEPDC	USAWB		288.86	133.37								
	ADDITIONAL NRCs																
		4-Wire DS1 Loop / 4-Wire DDITS Trunk Port - Subsequent Service Activity Per Service Order			UEPDC	USAS4		127.63	127.63								
		4-Wire DS1 Loop / 4-Wire DDITS Trunk Port - NRC - Subsequent Channel Activation/Chan - 2-Way Trunk			UEPDC	UDTTA		28.81	28.81								
		4-Wire DS1 Loop / 4-Wire DDITS Trunk Port - Subsequent Channel Activation/Chan - 1-Way Outward Trunk			UEPDC	UDTTB		28.81	28.81								
		4-Wire DS1 Loop / 4-Wire DDITS Trunk Port - Subsqnt Channel Activation/Chan Inward Trunk w/out DID			UEPDC	UDTTC		28.81	28.81					19.99	19.99		
		4-Wire DS1 Loop / 4-Wire DDITS Trunk Port - Subsqnt Chan Activation Per Chan - Inward Trunk with DID			UEPDC	UDTTD		28.81	28.81					19.99	19.99		
		4-Wire DS1 Loop / 4-Wire DDITS Trunk Port - Subsqnt Chan Activation / Chan - 2-Way DID w User Trans			UEPDC	UDTTE		28.81	28.81								
	BIPOLAR 8 ZERO SUBSTITUTION																
		B8ZS -Superframe Format			UEPDC	CCOSF		0.00	615.00					19.99	19.99		
		B8ZS - Extended Superframe Format			UEPDC	CCOEF		0.00	615.00					19.99	19.99		
	Alternate Mark Inversion																
		AMI -Superframe Format			UEPDC	MCOSF		0.00	0.00								
		AMI - Extended SuperFrame Format			UEPDC	MCOPO		0.00	0.00								
	Telephone Number/Trunk Group Establisment Charges																
		Telephone Number for 2-Way Trunk Group			UEPDC	UDTGX	0.00							19.99	19.99		
		Telephone Number for 1-Way Outward Trunk Group			UEPDC	UDTGY	0.00							19.99	19.99		
		Telephone Number for 1-Way Inward Trunk Group Without DID			UEPDC	UDTGZ	0.00							19.99	19.99		
		DID Numbers, Establish Trunk Group and Provide First Group of 20 DID Numbers			UEPDC	NDZ	0.00	0.00	0.00								
		DID Numbers for each Group of 20 DID Numbers			UEPDC	ND4	0.00	0.00	0.00								
		DID Numbers, Non- consecutive DID Numbers , Per Number			UEPDC	ND5	0.00	0.00	0.00								
		Reserve Non-Consecutive DID Nos.			UEPDC	ND6	0.00	0.00	0.00								
		Reserve DID Numbers			UEPDC	NDV	0.00	0.00	0.00								
	Dedicated DS1 (Interoffice Channel Mileage) -																
	FX/FCO for 4-Wire DS1 Digital Loop with 4-Wire DDITS Trunk Port																
		Interoffice Channel Mileage - Fixed rate 0-8 miles (Facilities Termination)			UEPDC	1LNO1	71.29	217.17	163.75	0.00	0.00			19.99	19.99		
		Interoffice Channel Mileage - Additional rate per mile - 0-8 miles			UEPDC	1LNOA	0.5753	0.00	0.00								
		Interoffice Channel Mileage - Fixed rate 9-25 miles (Facilities Termination)			UEPDC	1LNO2	0.00	0.00	0.00								
		Interoffice Channel Mileage - Additional rate per mile - 9-25 miles			UEPDC	1LNOB	0.5753	0.00	0.00								
		Interoffice Channel Mileage - Fixed rate 25+ miles (Facilities Termination)			UEPDC	1LNO3	0.00	0.00	0.00	0.00							

CATEGORY	RATE ELEMENTS	Interim	Zone	BCS	USOC	RATES ($)					Svc Order Submitted Elec per LSR	Svc Order Submitted Manually per LSR	Attachment: 2 Incremental Charge - Manual Svc Order vs. Electronic-1st	Attachment: 2 Incremental Charge - Manual Svc Order vs. Electronic-Add'l	Exhibit: B Incremental Charge - Manual Svc Order vs. Electronic-Disc 1st	Exhibit: B Incremental Charge - Manual Svc Order vs. Electronic-Disc Add'l
						Rec	Nonrecurring		Nonrecurring Disconnect		OSS Rates($)					
							First	Add'l	First	Add'l	SOMEC	SOMAN	SOMAN	SOMAN	SOMAN	SOMAN
	Interoffice Channel Mileage - Additional rate per mile - 25+ miles			UEPDC	1LNOC	0.5753	0.00	0.00								
	Local Number Portability, per DS0 Activated			UEPDC	LNPCP	3.15	0.00	0.00	0.00							
	Central Office Termininating Point			UEPDC	CTG	0.00										
	4-WIRE DS1 LOOP WITH CHANNELIZATION WITH PORT															
	System is 1 DS1 Loop, 1 D4 Channel Bank, and up to 24 Feature Activations															
	A system can have various rate combinations based on type and number of ports used															
	UNE DS1 Loop															
	4-Wire DS1 Loop - UNE Zone 1		1	UEPMG	USLDC	47.54										
	4-Wire DS1 Loop - UNE Zone 2		2	UEPMG	USLDC	84.27	0.00	0.00								
	4-Wire DS1 Loop - UNE Zone 3		3	UEPMG	USLDC	134.14	0.00	0.00								
	UNE DSO Channelization Capacities (D4 Channel Bank Configurations)															
	24 DSO Channel Capacity - 1 per DS1			UEPMG	VUM24	123.06	0.00	0.00					19.99	19.99		
	48 DSO Channel Capacity - 1 per 2 DS1s			UEPMG	VUM48	246.12	0.00	0.00					19.99	19.99		
	96 DSO Channel Capacity -1per 4 DS1s			UEPMG	VUM96	492.24	0.00	0.00					19.99	19.99		
	144 DS0 Channel Capacity - 1 per 6 DS1s			UEPMG	VUM14	738.36	0.00	0.00					19.99	19.99		
	192 DS0 Channel Capacity -1 per 8 DS1s			UEPMG	VUM19	984.48	0.00	0.00					19.99	19.99		
	240 DS0 Channel Capacity - 1 per 10 DS1s			UEPMG	VUM2O	1,230.60	0.00	0.00					19.99	19.99		
	288 DS0 Channel Capacity - 1 per 12 DS1s			UEPMG	VUM28	1,476.72	0.00	0.00					19.99	19.99		
	384 DS0 Channel Capacity - 1 per 16 DS1s			UEPMG	VUM38	1,968.96	0.00	0.00					19.99	19.99		
	480 DS0 Channel Capacity - 1 per 20 DS1s			UEPMG	VUM4O	2,461.20	0.00	0.00					19.99	19.99		
	576 DS0 Channel Capacity -1 per 24 DS1s			UEPMG	VUM57	2,953.44	0.00	0.00					19.99	19.99		
	672 DS0 Channel Capacity - 1 per 28 DS1s			UEPMG	VUM67	3,445.68	0.00	0.00					19.99	19.99		
	Non-Recurring Charges (NRC) Associated with 4-Wire DS1 Loop with Channeliztion with Port - Conversion Charge Based on a System															
	A Minimum System configuration is One (1) DS1, One (1) D4 Channel Bank, and Up To 24 DSO Ports with Feature Activations.															
	Multiples of this configuration functioning as one are considered Add'l after the minimum system configuration is counted.															
	NRC - Conversion (Currently Combined) with or without BellSouth Allowed Changes - Top 8 MSAs Only			UEPMG	USAC4	0.00	330.61	16.64					19.99	19.99		
	System Additions Where Currently Combined and New (Not Currently Combined)															
	In Density Zone 1 Top 8 MSAs															
	1 DS1/D4 Channel Bank - Add NRC for each Port and Assoc Fea Activation -			UEPMG	VUMD4	0.00	743.74	326.22	149.02	17.68			19.99	19.99		
	Bipolar 8 Zero Substitution															
	Clear Channel Capability Format, superframe - Subsequent Activity Only			UEPMG	CCOSF	0.00	0.00	615.00								
	Clear Channel Capability Format - Extended Superframe - Subsequent Activity Only			UEPMG	CCOEF	0.00	0.00	615.00								
	Alternate Mark Inversion (AMI)															
	Superframe Format			UEPMG	MCOSF	0.00	0.00	0.00								
	Extended Superframe Format			UEPMG	MCOPO	0.00	0.00	0.00								
	Exchange Ports Associated with 4-Wire DS1 Loop with Channelization with Port															
	Exchange Ports															
	Line Side Combination Channelized PBX Trunk Port - Business			UEPPX	UEPCX	14.00	0.00	0.00	0.00	0.00			40.18	9.45		
	Line Side Outward Channelized PBX Trunk Port - Business			UEPPX	UEPOX	14.00	0.00	0.00	0.00	0.00			40.18	9.45		
	Line Side Inward Only Channelized PBX Trunk Port without DID			UEPPX	UEP1X	14.00	0.00	0.00	0.00	0.00			40.18	9.45		
	2-Wire Trunk Side Unbundled Channelized DID Trunk Port			UEPPX	UEPDM	52.00	0.00	0.00	0.00	0.00			40.18	9.45		
	Feature Activations - Unbundled Loop Concentration															
	Feature (Service) Activation for each Line Port Terminated in D4 Bank			UEPPX	1PQWM	0.65	40.00	20.00	10.00	5.00			40.18	9.45		
	Feature (Service) Activation for each Trunk Port Terminated in D4 Bank			UEPPX	1PQWU	0.65	110.00	30.00	75.00	15.00			40.18	9.45		
	Telephone Number/ Group Establishment Charges for DID Service															
	DID Trunk Termination (1 per Port)			UEPPX	NDT	0.00	0.00	0.00								
	Estab Trk Grp and Provide 1st 20 DID Nos. (FL,GA, NC,& SC)			UEPPX	NDZ	0.00	0.00	0.00								
	DID Numbers - groups of 20 - Valid all States			UEPPX	ND4	0.00	0.00	0.00								
	Non-Consecutive DID Numbers - per number			UEPPX	ND5	0.00	0.00	0.00								
	Reserve Non-Consecutive DID Numbers			UEPPX	ND6	0.00	0.00	0.00								

UNBUNDLED NETWORK ELEMENTS - North Carolina														Attachment: 2		Exhibit: B	
CATEGORY		RATE ELEMENTS	Interim	Zone	BCS	USOC	RATES ($)					Svc Order Submitted Elec per LSR	Svc Order Submitted Manually per LSR	Incremental Charge - Manual Svc Order vs. Electronic-1st	Incremental Charge - Manual Svc Order vs. Electronic-Add'l	Incremental Charge - Manual Svc Order vs. Electronic-Disc 1st	Incremental Charge - Manual Svc Order vs. Electronic-Disc Add'l
							Rec	Nonrecurring		Nonrecurring Disconnect		OSS Rates($)					
								First	Add'l	First	Add'l	SOMEC	SOMAN	SOMAN	SOMAN	SOMAN	SOMAN
		Reserve DID Numbers			UEPPX	NDV	0.00	0.00	0.00								
	Local Number Portability																
		Local Number Portability - 1 per port			UEPPX	LNPCP	3.15	0.00	0.00								
	FEATURES - Vertical and Optional																
	Local Switching Features Offered with Line Side Ports Only																
		All Features Available			UEPPX	UEPVF	3.40	0.00	0.00					40.18	9.45		
UNBUNDLED CENTREX PORT/LOOP COMBINATIONS - COST BASED RATES																	
	1. Cost Based Rates are applied where BellSouth is required by FCC and/or State Commission rule to provide Unbundled Local Switching or Switch Ports.																
	2. Features shall apply to the Unbundled Port/Loop Combination - Cost Based Rate section in the same manner as they are applied to the Stand-Alone Unbundled Port section of this Rate Exhibit.																
	3. End Office and Tandem Switching Usage and Common Transport Usage rates in the Port section of this rate exhibit shall apply to all combinations of loop/port network elements except for UNE Coin Port/Loop Combinations.																
	4. The first and additional Port nonrecurring charges apply to Not Currently Combined Combos. For Currently Combined Combos, the nonrecurring charges shall be those identified in the Nonrecurring - Currently Combined sections. Additional NRCs may apply also and are categorized accordingly.																
	5. Market Rates for Unbundled Centrex Port/Loop Combination will be negotiated on an Individual Case Basis, until further notice.																
	UNE-P CENTREX - 5ESS (Valid in All States)																
	2-Wire VG Loop/2-Wire Voice Grade Port (Centrex) Combo																
	UNE Port/Loop Combination Rates (Non-Design)																
		2-Wire VG Loop/2-Wire Voice Grade Port (Centrex) Port Combo - Non-Design		1	UEP95		13.03										
		2-Wire VG Loop/2-Wire Voice Grade Port (Centrex)Port Combo - Non-Design		2	UEP95		21.33										
		2-Wire VG Loop/2-Wire Voice Grade Port (Centrex)Port Combo - Non-Design		3	UEP95		32.61										
	UNE Port/Loop Combination Rates (Design)																
		2-Wire VG Loop/2-Wire Voice Grade Port (Centrex) Port Combo - Design		1	UEP95		17.25										
		2-Wire VG Loop/2-Wire Voice Grade Port (Centrex)Port Combo - Design		2	UEP95		28.21										
		2-Wire VG Loop/2-Wire Voice Grade Port (Centrex)Port Combo - Design		3	UEP95		43.09										
	UNE Loop Rate																
		2-Wire Voice Grade Loop (SL 1) - Zone 1		1	UEP95	UECS1	10.75										
		2-Wire Voice Grade Loop (SL 1) - Zone 2		2	UEP95	UECS1	19.05										
		2-Wire Voice Grade Loop (SL 1) - Zone 3		3	UEP95	UECS1	30.33										
		2-Wire Voice Grade Loop (SL 2) - Zone 1		1	UEP95	UECS2	14.97										
		2-Wire Voice Grade Loop (SL 2) - Zone 2		2	UEP95	UECS2	25.93										
		2-Wire Voice Grade Loop (SL 2) - Zone 3		3	UEP95	UECS2	40.81										
	UNE Port Rate																
	All States																
		2-Wire Voice Grade Port (Centrex) Basic Local Area			UEP95	UEPYA	2.28	79.59	63.97					40.18	9.45		
		2-Wire Voice Grade Port (Centrex 800 termination)			UEP95	UEPYB	2.28	79.59	63.97					40.18	9.45		
		2-Wire Voice Grade Port (Centrex with Caller ID)1Basic Local Area			UEP95	UEPYH	2.28	79.59	63.97					40.18	9.45		
		2-Wire Voice Grade Port (Centrex from diff Serving Wire Center)2 Basic Local Area			UEP95	UEPYM	2.28	164.57	128.16					40.18	9.45		
		2-Wire Voice Grade Port, Diff Serving Wire Center - 800 Service Term - Basic Local Area			UEP95	UEPYZ	2.28							40.18	9.45		
		2-Wire Voice Grade Port terminated in on Megalink or equivalent - Basic Local Area			UEP95	UEPY9	2.28	79.59	63.97					40.18	9.45		
		2-Wire Voice Grade Port Terminated on 800 Service Term - Basic Local Area			UEP95	UEPY2	2.28	79.59	63.97					40.18	9.45		
	NC Only																
		2-Wire Voice Grade Port (Centrex)			UEP95	UEPUA	2.28	79.59	63.97					40.18	9.45		
		2-Wire Voice Grade Port (Centrex 800 termination)			UEP95	UEPUB	2.28	79.59	63.97					40.18	9.45		
		2-Wire Voice Grade Port (Centrex with Caller ID)1			UEP95	UEPUH	2.28	79.59	63.97					40.18	9.45		
		2-Wire Voice Grade Port (Centrex from diff Serving Wire Center)2			UEP95	UEPUM	2.28	164.57	128.16					40.18	9.45		
		2-Wire Voice Grade Port, Diff Serving Wire Center - 800 Service Term			UEP95	UEPUZ	2.28	164.57	128.16					40.18	9.45		

UNBUNDLED NETWORK ELEMENTS - North Carolina														Attachment: 2		Exhibit: B	
CATEGORY		RATE ELEMENTS	Interim	Zone	BCS	USOC	RATES ($)					Svc Order Submitted Elec per LSR	Svc Order Submitted Manually per LSR	Incremental Charge - Manual Svc Order vs. Electronic-1st	Incremental Charge - Manual Svc Order vs. Electronic-Add'l	Incremental Charge - Manual Svc Order vs. Electronic-Disc 1st	Incremental Charge - Manual Svc Order vs. Electronic-Disc Add'l
							Rec	Nonrecurring		Nonrecurring Disconnect		OSS Rates($)					
								First	Add'l	First	Add'l	SOMEC	SOMAN	SOMAN	SOMAN	SOMAN	SOMAN
		2-Wire Voice Grade Port terminated in on Megalink or equivalent			UEP95	UEPU9	2.28	79.59	63.97					40.18	9.45		
		2-Wire Voice Grade Port Terminated on 800 Service Term			UEP95	UEPU2	2.28	79.59	63.97					40.18	9.45		
	Local Switching																
		Centrex Intercom Funtionality, per port			UEP95	URECS	0.903										
	Local Number Portability																
		Local Number Portability (1 per port)			UEP95	LNPCC	0.35										
	Features																
		All Standard Features Offered, per port			UEP95	UEPVF	3.40										
		All Select Features Offered, per port			UEP95	UEPVS	0.00	457.83									
		All Centrex Control Features Offered, per port			UEP95	UEPVC	3.40										
	NARS																
		Unbundled Network Access Register - Combination			UEP95	UARCX	0.00	0.00	0.00					40.18	9.45		
		Unbundled Network Access Register - Indial			UEP95	UAR1X	0.00	0.00	0.00					40.18	9.45		
		Unbundled Network Access Register - Outdial			UEP95	UAROX	0.00	0.00	0.00					40.18	9.45		
	Miscellaneous Terminations																
	2-Wire Trunk Side																
		Trunk Side Terminations, each			UEP95	CEND6	12.36										
	4-Wire Digital (1.544 Megabits)																
		DS1 Circuit Terminations, each			UEP95	M1HD1	123.65							40.18	9.45		
		DS0 Channels Activated, each			UEP95	M1HDO	0.00	28.81						40.18	9.45		
	Interoffice Channel Mileage - 2-Wire																
		Interoffice Channel Facilities Termination			UEP95	M1GBC	18.00										
		Interoffice Channel mileage, per mile or fraction of mile			UEP95	M1GBM	0.0282										
	Feature Activations (DS0) Centrex Loops on Channelized DS1 Service																
	D4 Channel Bank Feature Activations																
		Feature Activation on D-4 Channel Bank Centrex Loop Slot			UEP95	1PQWS	0.65										
		Feature Activation on D-4 Channel Bank FX line Side Loop Slot			UEP95	1PQW6	0.65										
		Feature Activation on D-4 Channel Bank FX Trunk Side Loop Slot			UEP95	1PQW7	0.65										
		Feature Activation on D-4 Channel Bank Centrex Loop Slot - Different Wire Center			UEP95	1PQWP	0.65										
		Feature Activation on D-4 Channel Bank Private Line Loop Slot			UEP95	1PQWV	0.65										
		Feature Activation on D-4 Channel Bank Tjie Line/Trunk Loop Slot			UEP95	1PQWQ	0.65										
		Feature Activation on D-4 Channel Bank WATS Loop Slot			UEP95	1PQWA	0.65										
	Non-Recurring Charges (NRC) Associated with UNE-P Centrex																
		NRC Conversion Currently Combined Switch-As-Is with allowed changes, per port			UEP95	USAC2		2.77	0.40					40.18	9.45		
		New Centrex Standard Common Block			UEP95	M1ACS	0.00	695.11						40.18	9.45		
		New Centrex Customized Common Block			UEP95	M1ACC	0.00	695.11						40.18	9.45		
		NAR Establishment Charge, Per Occasion			UEP95	URECA	0.00	72.73						40.18	9.45		
	UNE-P CENTREX - DMS100 (Valid in All States)																
	2-Wire VG Loop/2-Wire Voice Grade Port (Centrex) Combo																
	UNE Port/Loop Combination Rates (Non-Design)																
		2-Wire VG Loop/2-Wire Voice Grade Port (Centrex) Port Combo - Non-Design		1	UEP9D		13.03										
		2-Wire VG Loop/2-Wire Voice Grade Port (Centrex)Port Combo - Non-Design		2	UEP9D		21.33										
		2-Wire VG Loop/2-Wire Voice Grade Port (Centrex)Port Combo - Non-Design		3	UEP9D		32.61										
	UNE Port/Loop Combination Rates (Design)																
		2-Wire VG Loop/2-Wire Voice Grade Port (Centrex) Port Combo - Design		1	UEP9D		17.25										
		2-Wire VG Loop/2-Wire Voice Grade Port (Centrex)Port Combo - Design		2	UEP9D		28.21										

UNBUNDLED NETWORK ELEMENTS - North Carolina														Attachment: 2		Exhibit: B	
CATEGORY		RATE ELEMENTS	Interim	Zone	BCS	USOC	RATES ($)					Svc Order Submitted Elec per LSR	Svc Order Submitted Manually per LSR	Incremental Charge - Manual Svc Order vs. Electronic-1st	Incremental Charge - Manual Svc Order vs. Electronic-Add'l	Incremental Charge - Manual Svc Order vs. Electronic-Disc 1st	Incremental Charge - Manual Svc Order vs. Electronic-Disc Add'l
							Rec	Nonrecurring		Nonrecurring Disconnect		OSS Rates($)					
								First	Add'l	First	Add'l	SOMEC	SOMAN	SOMAN	SOMAN	SOMAN	SOMAN
		2-Wire VG Loop/2-Wire Voice Grade Port (Centrex)Port Combo - Design		3	UEP9D		43.09										
	UNE Loop Rate																
		2-Wire Voice Grade Loop (SL 1) - Zone 1		1	UEP9D	UECS1	10.75										
		2-Wire Voice Grade Loop (SL 1) - Zone 2		2	UEP9D	UECS1	19.05										
		2-Wire Voice Grade Loop (SL 1) - Zone 3		3	UEP9D	UECS1	30.33										
		2-Wire Voice Grade Loop (SL 2) - Zone 1		1	UEP9D	UECS2	14.97										
		2-Wire Voice Grade Loop (SL 2) - Zone 2		2	UEP9D	UECS2	25.93										
		2-Wire Voice Grade Loop (SL 2) - Zone 3		3	UEP9D	UECS2	40.81										
	UNE Port Rate																
	ALL STATES																
		2-Wire Voice Grade Port (Centrex) Basic Local Area			UEP9D	UEPYA	2.28	79.59	63.97					40.18	9.45		
		2-Wire Voice Grade Port (Centrex 800 termination)Basic Local Area			UEP9D	UEPYB	2.28	79.59	63.97					40.18	9.45		
		2-Wire Voice Grade Port (Centrex / EBS-PSET)3Basic Local Area			UEP9D	UEPYC	2.28	79.59	63.97					40.18	9.45		
		2-Wire Voice Grade Port (Centrex / EBS-M5009)3Basic Local Area			UEP9D	UEPYD	2.28	79.59	63.97					40.18	9.45		
		2-Wire Voice Grade Port (Centrex / EBS-M5209))3 Basic Local Area			UEP9D	UEPYE	2.28	79.59	63.97					40.18	9.45		
		2-Wire Voice Grade Port (Centrex / EBS-M5112))3 Basic Local Area			UEP9D	UEPYF	2.28	79.59	63.97					40.18	9.45		
		2-Wire Voice Grade Port (Centrex / EBS-M5312))3Basic Local Area			UEP9D	UEPYG	2.28	79.59	63.97					40.18	9.45		
		2-Wire Voice Grade Port (Centrex / EBS-M5008))3 Basic Local Area			UEP9D	UEPYT	2.28	79.59	63.97					40.18	9.45		
		2-Wire Voice Grade Port (Centrex / EBS-M5208))3 Basic Local Area			UEP9D	UEPYU	2.28	79.59	63.97					40.18	9.45		
		2-Wire Voice Grade Port (Centrex / EBS-M5216))3 Basic Local Area			UEP9D	UEPYV	2.28	79.59	63.97					40.18	9.45		
		2-Wire Voice Grade Port (Centrex / EBS-M5316))3 Basic Local Area			UEP9D	UEPY3	2.28	79.59	63.97					40.18	9.45		
		2-Wire Voice Grade Port (Centrex with Caller ID) Basic Local Area			UEP9D	UEPYH	2.28	79.59	63.97					40.18	9.45		
		2-Wire Voice Grade Port (Centrex/Caller ID/Msg Wtg Lamp Indication))3 Basic Local Area			UEP9D	UEPYW	2.28	79.59	63.97					40.18	9.45		
		2-Wire Voice Grade Port (Centrex/Msg Wtg Lamp Indication))3 Basic Local Area			UEP9D	UEPYJ	2.28	79.59	63.97					40.18	9.45		
		2-Wire Voice Grade Port (Centrex from diff Serving Wire Center) 2 Basic Local Area			UEP9D	UEPYM	2.28	164.57	128.16					40.18	9.45		
		2-Wire Voice Grade Port (Centrex/differ SWC /EBS-PSET)2, 3 Basic Local Area			UEP9D	UEPYO	2.28	164.57	128.16					40.18	9.45		
		2-Wire Voice Grade Port (Centrex/differ SWC /EBS-M5009)2, 3 Basic Local Area			UEP9D	UEPYP	2.28	164.57	128.16					40.18	9.45		
		2-Wire Voice Grade Port (Centrex/differ SWC /EBS-5209)2, 3 Basic Local Area			UEP9D	UEPYQ	2.28	164.57	128.16					40.18	9.45		
		2-Wire Voice Grade Port (Centrex/differ SWC /EBS-M5112)2, 3 Basic Local Area			UEP9D	UEPYR	2.28	164.57	128.16					40.18	9.45		
		2-Wire Voice Grade Port (Centrex/differ SWC /EBS-M5312)2, 3 Basic Local Area			UEP9D	UEPYS	2.28	164.57	128.16					40.18	9.45		
		2-Wire Voice Grade Port (Centrex/differ SWC /EBS-M5008)2, 3 Basic Local Area			UEP9D	UEPY4	2.28	164.57	128.16					40.18	9.45		
		2-Wire Voice Grade Port (Centrex/differ SWC /EBS-M5208)2, 3 Basic Local Area			UEP9D	UEPY5	2.28	164.57	128.16					40.18	9.45		
		2-Wire Voice Grade Port (Centrex/differ SWC /EBS-M5216)2, 3 Basic Local Area			UEP9D	UEPY6	2.28	164.57	128.16					40.18	9.45		
		2-Wire Voice Grade Port (Centrex/differ SWC /EBS-M5316)2, 3 Basic Local Area			UEP9D	UEPY7	2.28	164.57	128.16					40.18	9.45		

UNBUNDLED NETWORK ELEMENTS - North Carolina														Attachment: 2		Exhibit: B	
CATEGORY		RATE ELEMENTS	Interim	Zone	BCS	USOC	RATES ($)					Svc Order Submitted Elec per LSR	Svc Order Submitted Manually per LSR	Incremental Charge - Manual Svc Order vs. Electronic-1st	Incremental Charge - Manual Svc Order vs. Electronic-Add'l	Incremental Charge - Manual Svc Order vs. Electronic-Disc 1st	Incremental Charge - Manual Svc Order vs. Electronic-Disc Add'l
							Rec	Nonrecurring		Nonrecurring Disconnect		OSS Rates($)					
								First	Add'l	First	Add'l	SOMEC	SOMAN	SOMAN	SOMAN	SOMAN	SOMAN
		2-Wire Voice Grade Port, Diff Serving Wire Center - 800 Service Term			UEP9D	UEPYZ	2.28	164.57	128.16					40.18	9.45		
		2-Wire Voice Grade Port terminated in on Megalink or equivalent Basic Local Area			UEP9D	UEPY9	2.28	79.59	63.97					40.18	9.45		
		2-Wire Voice Grade Port Terminated on 800 Service Term Basic Local Area			UEP9D	UEPY2	2.28	79.59	63.97					40.18	9.45		
	NC Only																
		2-Wire Voice Grade Port (Centrex)			UEP9D	UEPUA	2.28	79.59	63.97					40.18	9.45		
		2-Wire Voice Grade Port (Centrex 800 termination)			UEP9D	UEPUB	2.28	79.59	63.97					40.18	9.45		
		2-Wire Voice Grade Port (Centrex / EBS-PSET)3			UEP9D	UEPUC	2.28	79.59	63.97					40.18	9.45		
		2-Wire Voice Grade Port (Centrex / EBS-M5009)3			UEP9D	UEPUD	2.28	79.59	63.97					40.18	9.45		
		2-Wire Voice Grade Port (Centrex / EBS-M5209)3			UEP9D	UEPUE	2.28	79.59	63.97					40.18	9.45		
		2-Wire Voice Grade Port (Centrex / EBS-M5112)3			UEP9D	UEPUF	2.28	79.59	63.97					40.18	9.45		
		2-Wire Voice Grade Port (Centrex / EBS-M5312)3			UEP9D	UEPUG	2.28	79.59	63.97					40.18	9.45		
		2-Wire Voice Grade Port (Centrex / EBS-M5008)3			UEP9D	UEPUT	2.28	79.59	63.97					40.18	9.45		
		2-Wire Voice Grade Port (Centrex / EBS-M5208)3			UEP9D	UEPUU	2.28	79.59	63.97					40.18	9.45		
		2-Wire Voice Grade Port (Centrex / EBS-M5216)3			UEP9D	UEPUV	2.28	79.59	63.97					40.18	9.45		
		2-Wire Voice Grade Port (Centrex / EBS-M5316)3			UEP9D	UEPU3	2.28	79.59	63.97					40.18	9.45		
		2-Wire Voice Grade Port (Centrex with Caller ID)			UEP9D	UEPUH	2.28	79.59	63.97					40.18	9.45		
		2-Wire Voice Grade Port (Centrex/Caller ID/Msg Wtg Lamp Indication)3			UEP9D	UEPUW	2.28	79.59	63.97					40.18	9.45		
		2-Wire Voice Grade Port (Centrex/Msg Wtg Lamp Indication)3			UEP9D	UEPUJ	2.28	79.59	63.97					40.18	9.45		
		2-Wire Voice Grade Port (Centrex from diff Serving Wire Center) 2			UEP9D	UEPUM	2.28	164.57	128.16					40.18	9.45		
		2-Wire Voice Grade Port (Centrex/differ SWC /EBS-PSET)2, 3			UEP9D	UEPUO	2.28	164.57	128.16					40.18	9.45		
		2-Wire Voice Grade Port (Centrex/differ SWC /EBS-M5009)2, 3			UEP9D	UEPUP	2.28	164.57	128.16					40.18	9.45		
		2-Wire Voice Grade Port (Centrex/differ SWC /EBS-5209)2, 3			UEP9D	UEPUQ	2.28	164.57	128.16					40.18	9.45		
		2-Wire Voice Grade Port (Centrex/differ SWC /EBS-M5112)2, 3			UEP9D	UEPUR	2.28	164.57	128.16					40.18	9.45		
		2-Wire Voice Grade Port (Centrex/differ SWC /EBS-M5312)2, 3			UEP9D	UEPUS	2.28	164.57	128.16					40.18	9.45		
		2-Wire Voice Grade Port (Centrex/differ SWC /EBS-M5008)2, 3			UEP9D	UEPU4	2.28	164.57	128.16					40.18	9.45		
		2-Wire Voice Grade Port (Centrex/differ SWC /EBS-M5208)2, 3			UEP9D	UEPU5	2.28	164.57	128.16					40.18	9.45		
		2-Wire Voice Grade Port (Centrex/differ SWC /EBS-M5216)2, 3			UEP9D	UEPU6	2.28	164.57	128.16					40.18	9.45		
		2-Wire Voice Grade Port (Centrex/differ SWC /EBS-M5316)2, 3			UEP9D	UEPU7	2.28	164.57	128.16					40.18	9.45		
		2-Wire Voice Grade Port, Diff Serving Wire Center - 800 Service Term			UEP9D	UEPUZ	2.28	164.57	128.16					40.18	9.45		
		2-Wire Voice Grade Port terminated in on Megalink or equivalent			UEP9D	UEPU9	2.28	79.59	63.97					40.18	9.45		
		2-Wire Voice Grade Port Terminated on 800 Service Term			UEP9D	UEPU2	2.28	79.59	63.97					40.18	9.45		
	Local Switching																
		Centrex Intercom Funtionality, per port			UEP9D	URECS	0.903										
	Local Number Portability																
		Local Number Portability (1 per port)			UEP9D	LNPCC	0.35										
	Features																
		All Standard Features Offered, per port			UEP9D	UEPVF	3.40										
		All Select Features Offered, per port			UEP9D	UEPVS	0.00	457.83						40.18	9.45		
		All Centrex Control Features Offered, per port			UEP9D	UEPVC	3.40										
	NARS																
		Unbundled Network Access Register - Combination			UEP9D	UARCX	0.00	0.00	0.00					40.18	9.45		
		Unbundled Network Access Register - Inward			UEP9D	UAR1X	0.00	0.00	0.00					40.18	9.45		
		Unbundled Network Access Register - Outdial			UEP9D	UAROX	0.00	0.00	0.00					40.18	9.45		
	Miscellaneous Terminations																
	2-Wire Trunk Side																

UNBUNDLED NETWORK ELEMENTS - North Carolina													Attachment: 2		Exhibit: B	
CATEGORY	RATE ELEMENTS	Interim	Zone	BCS	USOC	RATES ($)					Svc Order Submitted Elec per LSR	Svc Order Submitted Manually per LSR	Incremental Charge - Manual Svc Order vs. Electronic-1st	Incremental Charge - Manual Svc Order vs. Electronic-Add'l	Incremental Charge - Manual Svc Order vs. Electronic-Disc 1st	Incremental Charge - Manual Svc Order vs. Electronic-Disc Add'l
						Rec	Nonrecurring		Nonrecurring Disconnect		OSS Rates($)					
							First	Add'l	First	Add'l	SOMEC	SOMAN	SOMAN	SOMAN	SOMAN	SOMAN
	Trunk Side Terminations, each			UEP9D	CEND6	12.36										
	4-Wire Digital (1.544 Megabits)															
	DS1 Circuit Terminations, each			UEP9D	M1HD1	123.65							40.18	9.45		
	DS0 Channels Activiated per Channel			UEP9D	M1HDO	0.00	28.81						40.18	9.45		
	Interoffice Channel Mileage - 2-Wire															
	Interoffice Channel Facilities Termination			UEP9D	M1GBC	18.00										
	Interoffice Channel mileage, per mile or fraction of mile			UEP9D	M1GBM	0.0282										
	Feature Activations (DS0) Centrex Loops on Channelized DS1 Service															
	D4 Channel Bank Feature Activations															
	Feature Activation on D-4 Channel Bank Centrex Loop Slot			UEP9D	1PQWS	0.65										
	Feature Activation on D-4 Channel Bank FX line Side Loop Slot			UEP9D	1PQW6	0.65										
	Feature Activation on D-4 Channel Bank FX Trunk Side Loop Slot			UEP9D	1PQW7	0.65										
	Feature Activation on D-4 Channel Bank Centrex Loop Slot - Different Wire Center			UEP9D	1PQWP	0.65										
	Feature Activation on D-4 Channel Bank Private Line Loop Slot			UEP9D	1PQWV	0.65										
	Feature Activation on D-4 Channel Bank Tjie Line/Trunk Loop Slot			UEP9D	1PQWQ	0.65										
	Feature Activation on D-4 Channel Bank WATS Loop Slot			UEP9D	1PQWA	0.65										
	Non-Recurring Charges (NRC) Associated with UNE-P Centrex															
	NRC Conversion Currently Combined Switch-As-Is with allowed changes, per port			UEP9D	USAC2		2.77	0.40					40.18	9.45		
	New Centrex Standard Common Block			UEP9D	M1ACS	0.00	695.11						40.18	9.45		
	New Centrex Customized Common Block			UEP9D	M1ACC	0.00	695.11						40.18	9.45		
	NAR Establishment Charge, Per Occasion			UEP9D	URECA	0.00	72.73						40.18	9.45		
	Note 1 - Required Port for Centrex Control in 1AESS, 5ESS & EWSD															
	Note 2 - Requres Interoffice Channel Mileage															
	Note 3 - Requires Specific Customer Premises Equipment															
UNBUNDLED CENTREX PORT/LOOP COMBINATIONS - MARKET RATES																
	1. Market Rates are applied where BellSouth is not required by FCC and/or State Commission rule to provide Unbundled Local Switching or Switch Ports.															
	2. Recurring Charges for all Standard Centrex and Centrex Conrol Features are Included in the Market Rate															
	3. End Office and Tandem Switching Usage and Common Transport Usage rates in the Port section of this rate exhibit shall apply to all combinations of loop/port network elements except for UNE Coin Port/Loop Combinations.															
	4. The first and additional Port nonrecurring charges apply to Not Currently Combined Combos. For Currently Combined Combos, the nonrecurring charges shall be those identified in the Nonrecurring - Currently Combined sections. Additional NRCs may apply also and are categorized accordingly.															
	Features															
	UNE-P CENTREX - 5ESS (Valid in All States)															
	2-Wire VG Loop/2-Wire Voice Grade Port (Centrex) Combo															
	UNE Port/Loop Combination Rates (Non-Design)															
	2-Wire VG Loop/2-Wire Voice Grade Port (Centrex) Port Combo - Non-Design		1	UEP95		24.75										
	2-Wire VG Loop/2-Wire Voice Grade Port (Centrex)Port Combo - Non-Design		2	UEP95		33.05										
	2-Wire VG Loop/2-Wire Voice Grade Port (Centrex)Port Combo - Non-Design		3	UEP95		44.33										
	UNE Port/Loop Combination Rates (Design)															
	2-Wire VG Loop/2-Wire Voice Grade Port (Centrex) Port Combo - Design		1	UEP95		28.97										
	2-Wire VG Loop/2-Wire Voice Grade Port (Centrex)Port Combo - Design		2	UEP95		39.93										
	2-Wire VG Loop/2-Wire Voice Grade Port (Centrex)Port Combo - Design		3	UEP95		54.81										
	UNE Loop Rate															
	2-Wire Voice Grade Loop (SL 1) - Zone 1		1	UEP95	UECS1	10.75										
	2-Wire Voice Grade Loop (SL 1) - Zone 2		2	UEP95	UECS1	19.05										
	2-Wire Voice Grade Loop (SL 1) - Zone 3		3	UEP95	UECS1	30.33										
	2-Wire Voice Grade Loop (SL 2) - Zone 1		1	UEP95	UECS2	14.97										
	2-Wire Voice Grade Loop (SL 2) - Zone 2		2	UEP95	UECS2	25.93										

UNBUNDLED NETWORK ELEMENTS - North Carolina														Attachment: 2		Exhibit: B	
CATEGORY		RATE ELEMENTS	Interim	Zone	BCS	USOC	RATES ($)					Svc Order Submitted Elec per LSR	Svc Order Submitted Manually per LSR	Incremental Charge - Manual Svc Order vs. Electronic-1st	Incremental Charge - Manual Svc Order vs. Electronic-Add'l	Incremental Charge - Manual Svc Order vs. Electronic-Disc 1st	Incremental Charge - Manual Svc Order vs. Electronic-Disc Add'l
							Rec	Nonrecurring		Nonrecurring Disconnect		OSS Rates($)					
								First	Add'l	First	Add'l	SOMEC	SOMAN	SOMAN	SOMAN	SOMAN	SOMAN
		2-Wire Voice Grade Loop (SL 2) - Zone 3		3	UEP95	UECS2	40.81										
	UNE Port Rate																
	All States																
		2-Wire Voice Grade Port (Centrex) Basic Local Area			UEP95	UEPYA	14.00	105.00	85.00					40.18	9.45		
		2-Wire Voice Grade Port (Centrex 800 termination)			UEP95	UEPYB	14.00	105.00	85.00					40.18	9.45		
		2-Wire Voice Grade Port (Centrex with Caller ID)1Basic Local Area			UEP95	UEPYH	14.00	105.00	85.00					40.18	9.45		
		2-Wire Voice Grade Port (Centrex from diff Serving Wire Center)2 Basic Local Area			UEP95	UEPYM	14.00	215.00	165.00					40.18	9.45		
		2-Wire Voice Grade Port, Diff Serving Wire Center - 800 Service Term - Basic Local Area			UEP95	UEPYZ	14.00							40.18	9.45		
		2-Wire Voice Grade Port terminated in on Megalink or equivalent - Basic Local Area			UEP95	UEPY9	14.00	105.00	85.00					40.18	9.45		
		2-Wire Voice Grade Port Terminated on 800 Service Term - Basic Local Area			UEP95	UEPY2	14.00	105.00	85.00					40.18	9.45		
	NC Only																
		2-Wire Voice Grade Port (Centrex)			UEP95	UEPUA	14.00	105.00	85.00					40.18	9.45		
		2-Wire Voice Grade Port (Centrex 800 termination)			UEP95	UEPUB	14.00	105.00	85.00					40.18	9.45		
		2-Wire Voice Grade Port (Centrex with Caller ID)1			UEP95	UEPUH	14.00	105.00	85.00					40.18	9.45		
		2-Wire Voice Grade Port (Centrex from diff Serving Wire Center)2			UEP95	UEPUM	14.00	215.00	165.00					40.18	9.45		
		2-Wire Voice Grade Port, Diff Serving Wire Center - 800 Service Term			UEP95	UEPUZ	14.00	215.00	165.00					40.18	9.45		
		2-Wire Voice Grade Port terminated in on Megalink or equivalent			UEP95	UEPU9	14.00	105.00	85.00					40.18	9.45		
		2-Wire Voice Grade Port Terminated on 800 Service Term			UEP95	UEPU2	14.00	105.00	85.00					40.18	9.45		
	Local Switching																
		Centrex Intercom Funtionality, per port			UEP95	URECS	0.903										
	Local Number Portability																
		Local Number Portability (1 per port)			UEP95	LNPCC	0.35										
	Features																
		All Standard Features Offered, per port			UEP95	UEPVF	0.00										
		All Select Features Offered, per port			UEP95	UEPVS	0.00	457.83									
		All Centrex Control Features Offered, per port			UEP95	UEPVC	0.00										
	NARS																
		Unbundled Network Access Register - Combination			UEP95	UARCX	0.00	0.00	0.00					40.18	9.45		
		Unbundled Network Access Register - Indial			UEP95	UAR1X	0.00	0.00	0.00					40.18	9.45		
		Unbundled Network Access Register - Outdial			UEP95	UAROX	0.00	0.00	0.00					40.18	9.45		
	Miscellaneous Terminations																
	2-Wire Trunk Side																
		Trunk Side Terminations, each			UEP95	CEND6	12.36										
	4-Wire Digital (1.544 Megabits)																
		DS1 Circuit Terminations, each			UEP95	M1HD1	123.65							40.18	9.45		
		DS0 Channels Activated, each			UEP95	M1HDO	0.00	28.81						40.18	9.45		
	Interoffice Channel Mileage - 2-Wire																
		Interoffice Channel Facilities Termination			UEP95	M1GBC	18.00										
		Interoffice Channel mileage, per mile or fraction of mile			UEP95	M1GBM	0.0282										
	Feature Activations (DS0) Centrex Loops on Channelized DS1 Service																
	D4 Channel Bank Feature Activations																
		Feature Activation on D-4 Channel Bank Centrex Loop Slot			UEP95	1PQWS	0.65										
		Feature Activation on D-4 Channel Bank FX line Side Loop Slot			UEP95	1PQW6	0.65										
		Feature Activation on D-4 Channel Bank FX Trunk Side Loop Slot			UEP95	1PQW7	0.65										
		Feature Activation on D-4 Channel Bank Centrex Loop Slot - Different Wire Center			UEP95	1PQWP	0.65										
		Feature Activation on D-4 Channel Bank Private Line Loop Slot			UEP95	1PQWV	0.65										

CATEGORY	RATE ELEMENTS	Interim	Zone	BCS	USOC	RATES ($)					Svc Order Submitted Elec per LSR	Svc Order Submitted Manually per LSR	Attachment: 2 Incremental Charge - Manual Svc Order vs. Electronic-1st	Attachment: 2 Incremental Charge - Manual Svc Order vs. Electronic-Add'l	Exhibit: B Incremental Charge - Manual Svc Order vs. Electronic-Disc 1st	Exhibit: B Incremental Charge - Manual Svc Order vs. Electronic-Disc Add'l
						Rec	Nonrecurring		Nonrecurring Disconnect		OSS Rates($)					
							First	Add'l	First	Add'l	SOMEC	SOMAN	SOMAN	SOMAN	SOMAN	SOMAN
	Feature Activation on D-4 Channel Bank Tjie Line/Trunk Loop Slot			UEP95	1PQWQ	0.65										
	Feature Activation on D-4 Channel Bank WATS Loop Slot			UEP95	1PQWA	0.65										
Non-Recurring Charges (NRC) Associated with UNE-P Centrex																
	NRC Conversion Currently Combined Switch-As-Is with allowed changes, per port			UEP95	USAC2		2.77	0.40					40.18	9.45		
	New Centrex Standard Common Block			UEP95	M1ACS	0.00	695.11						40.18	9.45		
	New Centrex Customized Common Block			UEP95	M1ACC	0.00	695.11						40.18	9.45		
	NAR Establishment Charge, Per Occasion			UEP95	URECA	0.00	72.73						40.18	9.45		
UNE-P CENTREX - DMS100 (Valid in All States)																
2-Wire VG Loop/2-Wire Voice Grade Port (Centrex) Combo																
UNE Port/Loop Combination Rates (Non-Design)																
	2-Wire VG Loop/2-Wire Voice Grade Port (Centrex) Port Combo - Non-Design		1	UEP9D		24.75										
	2-Wire VG Loop/2-Wire Voice Grade Port (Centrex)Port Combo - Non-Design		2	UEP9D		33.05										
	2-Wire VG Loop/2-Wire Voice Grade Port (Centrex)Port Combo - Non-Design		3	UEP9D		44.33										
UNE Port/Loop Combination Rates (Design)																
	2-Wire VG Loop/2-Wire Voice Grade Port (Centrex) Port Combo - Design		1	UEP9D		28.97										
	2-Wire VG Loop/2-Wire Voice Grade Port (Centrex)Port Combo - Design		2	UEP9D		39.93										
	2-Wire VG Loop/2-Wire Voice Grade Port (Centrex)Port Combo - Design		3	UEP9D		54.81										
UNE Loop Rate																
	2-Wire Voice Grade Loop (SL 1) - Zone 1		1	UEP9D	UECS1	10.75										
	2-Wire Voice Grade Loop (SL 1) - Zone 2		2	UEP9D	UECS1	19.05										
	2-Wire Voice Grade Loop (SL 1) - Zone 3		3	UEP9D	UECS1	30.33										
	2-Wire Voice Grade Loop (SL 2) - Zone 1		1	UEP9D	UECS2	14.97										
	2-Wire Voice Grade Loop (SL 2) - Zone 2		2	UEP9D	UECS2	25.93										
	2-Wire Voice Grade Loop (SL 2) - Zone 3		3	UEP9D	UECS2	40.81										
UNE Port Rate																
ALL STATES																
	2-Wire Voice Grade Port (Centrex) Basic Local Area			UEP9D	UEPYA	14.00	105.00	85.00					40.18	9.45		
	2-Wire Voice Grade Port (Centrex 800 termination)Basic Local Area			UEP9D	UEPYB	14.00	105.00	85.00					40.18	9.45		
	2-Wire Voice Grade Port (Centrex / EBS-PSET)3Basic Local Area			UEP9D	UEPYC	14.00	105.00	85.00					40.18	9.45		
	2-Wire Voice Grade Port (Centrex / EBS-M5009)3Basic Local Area			UEP9D	UEPYD	14.00	105.00	85.00					40.18	9.45		
	2-Wire Voice Grade Port (Centrex / EBS-M5209))3 Basic Local Area			UEP9D	UEPYE	14.00	105.00	85.00					40.18	9.45		
	2-Wire Voice Grade Port (Centrex / EBS-M5112))3 Basic Local Area			UEP9D	UEPYF	14.00	105.00	85.00					40.18	9.45		
	2-Wire Voice Grade Port (Centrex / EBS-M5312))3Basic Local Area			UEP9D	UEPYG	14.00	105.00	85.00					40.18	9.45		
	2-Wire Voice Grade Port (Centrex / EBS-M5008))3 Basic Local Area			UEP9D	UEPYT	14.00	105.00	85.00					40.18	9.45		
	2-Wire Voice Grade Port (Centrex / EBS-M5208))3 Basic Local Area			UEP9D	UEPYU	14.00	105.00	85.00					40.18	9.45		
	2-Wire Voice Grade Port (Centrex / EBS-M5216))3 Basic Local Area			UEP9D	UEPYV	14.00	105.00	85.00					40.18	9.45		
	2-Wire Voice Grade Port (Centrex / EBS-M5316))3 Basic Local Area			UEP9D	UEPY3	14.00	105.00	85.00					40.18	9.45		
	2-Wire Voice Grade Port (Centrex with Caller ID) Basic Local Area			UEP9D	UEPYH	14.00	105.00	85.00					40.18	9.45		
	2-Wire Voice Grade Port (Centrex/Caller ID/Msg Wtg Lamp Indication))3 Basic Local Area			UEP9D	UEPYW	14.00	105.00	85.00					40.18	9.45		

CATEGORY		RATE ELEMENTS	Interim	Zone	BCS	USOC	RATES ($)					Svc Order Submitted Elec per LSR	Svc Order Submitted Manually per LSR	Attachment: 2 Incremental Charge - Manual Svc Order vs. Electronic-1st	Attachment: 2 Incremental Charge - Manual Svc Order vs. Electronic-Add'l	Exhibit: B Incremental Charge - Manual Svc Order vs. Electronic-Disc 1st	Exhibit: B Incremental Charge - Manual Svc Order vs. Electronic-Disc Add'l
							Rec	Nonrecurring		Nonrecurring Disconnect		OSS Rates($)					
								First	Add'l	First	Add'l	SOMEC	SOMAN	SOMAN	SOMAN	SOMAN	SOMAN
		2-Wire Voice Grade Port (Centrex/Msg Wtg Lamp Indication))3 Basic Local Area			UEP9D	UEPYJ	14.00	105.00	85.00					40.18	9.45		
		2-Wire Voice Grade Port (Centrex from diff Serving Wire Center) 2 Basic Local Area			UEP9D	UEPYM	14.00	215.00	165.00					40.18	9.45		
		2-Wire Voice Grade Port (Centrex/differ SWC /EBS-PSET)2, 3 Basic Local Area			UEP9D	UEPYO	14.00	215.00	165.00					40.18	9.45		
		2-Wire Voice Grade Port (Centrex/differ SWC /EBS-M5009)2, 3 Basic Local Area			UEP9D	UEPYP	14.00	215.00	165.00					40.18	9.45		
		2-Wire Voice Grade Port (Centrex/differ SWC /EBS-5209)2, 3 Basic Local Area			UEP9D	UEPYQ	14.00	215.00	165.00					40.18	9.45		
		2-Wire Voice Grade Port (Centrex/differ SWC /EBS-M5112)2, 3 Basic Local Area			UEP9D	UEPYR	14.00	215.00	165.00					40.18	9.45		
		2-Wire Voice Grade Port (Centrex/differ SWC /EBS-M5312)2, 3 Basic Local Area			UEP9D	UEPYS	14.00	215.00	165.00					40.18	9.45		
		2-Wire Voice Grade Port (Centrex/differ SWC /EBS-M5008)2, 3 Basic Local Area			UEP9D	UEPY4	14.00	215.00	165.00					40.18	9.45		
		2-Wire Voice Grade Port (Centrex/differ SWC /EBS-M5208)2, 3 Basic Local Area			UEP9D	UEPY5	14.00	215.00	165.00					40.18	9.45		
		2-Wire Voice Grade Port (Centrex/differ SWC /EBS-M5216)2, 3 Basic Local Area			UEP9D	UEPY6	14.00	215.00	165.00					40.18	9.45		
		2-Wire Voice Grade Port (Centrex/differ SWC /EBS-M5316)2, 3 Basic Local Area			UEP9D	UEPY7	14.00	215.00	165.00					40.18	9.45		
		2-Wire Voice Grade Port, Diff Serving Wire Center - 800 Service Term			UEP9D	UEPYZ	14.00	215.00	165.00					40.18	9.45		
		2-Wire Voice Grade Port terminated in on Megalink or equivalent Basic Local Area			UEP9D	UEPY9	14.00	105.00	85.00					40.18	9.45		
		2-Wire Voice Grade Port Terminated on 800 Service Term Basic Local Area			UEP9D	UEPY2	14.00	105.00	85.00					40.18	9.45		
	NC Only																
		2-Wire Voice Grade Port (Centrex)			UEP9D	UEPUA	14.00	105.00	85.00					40.18	9.45		
		2-Wire Voice Grade Port (Centrex 800 termination)			UEP9D	UEPUB	14.00	105.00	85.00					40.18	9.45		
		2-Wire Voice Grade Port (Centrex / EBS-PSET)3			UEP9D	UEPUC	14.00	105.00	85.00					40.18	9.45		
		2-Wire Voice Grade Port (Centrex / EBS-M5009)3			UEP9D	UEPUD	14.00	105.00	85.00					40.18	9.45		
		2-Wire Voice Grade Port (Centrex / EBS-M5209)3			UEP9D	UEPUE	14.00	105.00	85.00					40.18	9.45		
		2-Wire Voice Grade Port (Centrex / EBS-M5112)3			UEP9D	UEPUF	14.00	105.00	85.00					40.18	9.45		
		2-Wire Voice Grade Port (Centrex / EBS-M5312)3			UEP9D	UEPUG	14.00	105.00	85.00					40.18	9.45		
		2-Wire Voice Grade Port (Centrex / EBS-M5008)3			UEP9D	UEPUT	14.00	105.00	85.00					40.18	9.45		
		2-Wire Voice Grade Port (Centrex / EBS-M5208)3			UEP9D	UEPUU	14.00	105.00	85.00					40.18	9.45		
		2-Wire Voice Grade Port (Centrex / EBS-M5216)3			UEP9D	UEPUV	14.00	105.00	85.00					40.18	9.45		
		2-Wire Voice Grade Port (Centrex / EBS-M5316)3			UEP9D	UEPU3	14.00	105.00	85.00					40.18	9.45		
		2-Wire Voice Grade Port (Centrex with Caller ID)			UEP9D	UEPUH	14.00	105.00	85.00					40.18	9.45		
		2-Wire Voice Grade Port (Centrex/Caller ID/Msg Wtg Lamp Indication)3			UEP9D	UEPUW	14.00	105.00	85.00					40.18	9.45		
		2-Wire Voice Grade Port (Centrex/Msg Wtg Lamp Indication)3			UEP9D	UEPUJ	14.00	105.00	85.00					40.18	9.45		
		2-Wire Voice Grade Port (Centrex from diff Serving Wire Center) 2			UEP9D	UEPUM	14.00	215.00	165.00					40.18	9.45		
		2-Wire Voice Grade Port (Centrex/differ SWC /EBS-PSET)2, 3			UEP9D	UEPUO	14.00	215.00	165.00					40.18	9.45		
		2-Wire Voice Grade Port (Centrex/differ SWC /EBS-M5009)2, 3			UEP9D	UEPUP	14.00	215.00	165.00					40.18	9.45		
		2-Wire Voice Grade Port (Centrex/differ SWC /EBS-5209)2, 3			UEP9D	UEPUQ	14.00	215.00	165.00					40.18	9.45		
		2-Wire Voice Grade Port (Centrex/differ SWC /EBS-M5112)2, 3			UEP9D	UEPUR	14.00	215.00	165.00					40.18	9.45		
		2-Wire Voice Grade Port (Centrex/differ SWC /EBS-M5312)2, 3			UEP9D	UEPUS	14.00	215.00	165.00					40.18	9.45		
		2-Wire Voice Grade Port (Centrex/differ SWC /EBS-M5008)2, 3			UEP9D	UEPU4	14.00	215.00	165.00					40.18	9.45		
		2-Wire Voice Grade Port (Centrex/differ SWC /EBS-M5208)2, 3			UEP9D	UEPU5	14.00	215.00	165.00					40.18	9.45		

UNBUNDLED NETWORK ELEMENTS - North Carolina														Attachment: 2		Exhibit: B	
CATEGORY		RATE ELEMENTS	Interim	Zone	BCS	USOC	RATES ($)					Svc Order Submitted Elec per LSR	Svc Order Submitted Manually per LSR	Incremental Charge - Manual Svc Order vs. Electronic-1st	Incremental Charge - Manual Svc Order vs. Electronic-Add'l	Incremental Charge - Manual Svc Order vs. Electronic-Disc 1st	Incremental Charge - Manual Svc Order vs. Electronic-Disc Add'l
							Rec	Nonrecurring		Nonrecurring Disconnect		OSS Rates($)					
								First	Add'l	First	Add'l	SOMEC	SOMAN	SOMAN	SOMAN	SOMAN	SOMAN
		2-Wire Voice Grade Port (Centrex/differ SWC /EBS-M5216)2, 3			UEP9D	UEPU6	14.00	215.00	165.00					40.18	9.45		
		2-Wire Voice Grade Port (Centrex/differ SWC /EBS-M5316)2, 3			UEP9D	UEPU7	14.00	215.00	165.00					40.18	9.45		
		2-Wire Voice Grade Port, Diff Serving Wire Center - 800 Service Term			UEP9D	UEPUZ	14.00	215.00	165.00					40.18	9.45		
		2-Wire Voice Grade Port terminated in on Megalink or equivalent			UEP9D	UEPU9	14.00	105.00	85.00					40.18	9.45		
		2-Wire Voice Grade Port Terminated on 800 Service Term			UEP9D	UEPU2	14.00	105.00	85.00					40.18	9.45		
	Local Switching																
		Centrex Intercom Funtionality, per port			UEP9D	URECS	0.903										
	Local Number Portability																
		Local Number Portability (1 per port)			UEP9D	LNPCC	0.35										
	Features																
		All Standard Features Offered, per port			UEP9D	UEPVF	0.00										
		All Select Features Offered, per port			UEP9D	UEPVS	0.00	457.83						40.18	9.45		
		All Centrex Control Features Offered, per port			UEP9D	UEPVC	0.00										
	NARS																
		Unbundled Network Access Register - Combination			UEP9D	UARCX	0.00	0.00	0.00					40.18	9.45		
		Unbundled Network Access Register - Inward			UEP9D	UAR1X	0.00	0.00	0.00					40.18	9.45		
		Unbundled Network Access Register - Outdial			UEP9D	UAROX	0.00	0.00	0.00					40.18	9.45		
	Miscellaneous Terminations																
	2-Wire Trunk Side																
		Trunk Side Terminations, each			UEP9D	CEND6	12.36										
	4-Wire Digital (1.544 Megabits)																
		DS1 Circuit Terminations, each			UEP9D	M1HD1	123.65							40.18	9.45		
		DS0 Channels Activiated per Channel			UEP9D	M1HDO	0.00	28.81						40.18	9.45		
	Interoffice Channel Mileage - 2-Wire																
		Interoffice Channel Facilities Termination			UEP9D	M1GBC	18.00										
		Interoffice Channel mileage, per mile or fraction of mile			UEP9D	M1GBM	0.0282										
	Feature Activations (DS0) Centrex Loops on Channelized DS1 Service																
	D4 Channel Bank Feature Activations																
		Feature Activation on D-4 Channel Bank Centrex Loop Slot			UEP9D	1PQWS	0.65										
		Feature Activation on D-4 Channel Bank FX line Side Loop Slot			UEP9D	1PQW6	0.65										
		Feature Activation on D-4 Channel Bank FX Trunk Side Loop Slot			UEP9D	1PQW7	0.65										
		Feature Activation on D-4 Channel Bank Centrex Loop Slot - Different Wire Center			UEP9D	1PQWP	0.65										
		Feature Activation on D-4 Channel Bank Private Line Loop Slot			UEP9D	1PQWV	0.65										
		Feature Activation on D-4 Channel Bank Tjie Line/Trunk Loop Slot			UEP9D	1PQWQ	0.65										
		Feature Activation on D-4 Channel Bank WATS Loop Slot			UEP9D	1PQWA	0.65										
	Non-Recurring Charges (NRC) Associated with UNE-P Centrex																
		NRC Conversion Currently Combined Switch-As-Is with allowed changes, per port			UEP9D	USAC2		2.77	0.40					40.18	9.45		
		New Centrex Standard Common Block			UEP9D	M1ACS	0.00	695.11						40.18	9.45		
		New Centrex Customized Common Block			UEP9D	M1ACC	0.00	695.11						40.18	9.45		
		NAR Establishment Charge, Per Occasion			UEP9D	URECA	0.00	72.73						40.18	9.45		
	Note 1 - Required Port for Centrex Control in 1AESS, 5ESS & EWSD																
	Note 2 - Requres Interoffice Channel Mileage																
	Note 3 - Requires Specific Customer Premises Equipment																
	Note: Rates displaying an "R" in Interim column are interim and subject to rate true-up as set forth in General Terms and Conditions.																

UNBUNDLED NETWORK ELEMENTS - South Carolina													Attachment: 2		Exhibit: B	
CATEGORY	RATE ELEMENTS	Interim	Zone	BCS	USOC	RATES ($)					Svc Order Submitted Elec per LSR	Svc Order Submitted Manually per LSR	Incremental Charge - Manual Svc Order vs. Electronic-1st	Incremental Charge - Manual Svc Order vs. Electronic-Add'l	Incremental Charge - Manual Svc Order vs. Electronic-Disc 1st	Incremental Charge - Manual Svc Order vs. Electronic-Disc Add'l
						Rec	Nonrecurring		Nonrecurring Disconnect		OSS Rates($)					
							First	Add'l	First	Add'l	SOMEC	SOMAN	SOMAN	SOMAN	SOMAN	SOMAN
	The "Zone" shown in the sections for stand-alone loops or loops as part of a combination refers to Geographically Deaveraged UNE Zones. To view Geographically Deaveraged UNE Zone Designations by Central Office, refer to internet Website: http://www.interconnection.bellsouth.com/become_a_clec/html/interconnection.htm															
OPERATIONAL SUPPORT SYSTEMS																
	NOTE: (1) Electronic Service Order: CLEC should contact its contract negotiator if it prefers the state specific electronic service ordering charges as ordered by the State Commissions. The electronic service ordering charge currently contained in this rate exhibit is the BellSouth regional electronic service ordering charge. CLEC may elect either the state specific Commission ordered rates for the electronic service ordering charges, or CLEC may elect the regional electronic service ordering charge.															
	NOTE: (2) Any element that can be ordered electronically will be billed according to the SOMEC rate listed in this category. Please refer to BellSouth's Business Rules for Local Ordering (BBR-LO) to determine if a product can be ordered electronically. For those elements that cannot be ordered electronically at present per the BBR-LO, the listed SOMEC rate in this category reflects the charge that would be billed to a CLEC once electronic ordering capabilities come on-line for that element. Otherwise, the manual ordering charge, SOMAN, will be applied to a CLECs bill when it submits an LSR to BellSouth.															
	Manual Service Order Charge, per LSR, Disconnect Only (SC)				SOMAN				1.97							
	Electronic OSS Charge, per LSR, submitted via BST's OSS interactive interfaces (Regional)				SOMEC		3.50									
UNE SERVICE DATE ADVANCEMENT CHARGE																
	NOTE: The Expedite charge will be maintained commensurate with BellSouth's FCC No.1 Tariff, Section 5 as applicable.															
	UNE Expedite Charge per Circuit or Line Assignable USOC, per Day			UAL, UEANL, UCL, UEF, UDF, UEQ, UDL, UENTW, UDN, UEA, UHL, ULC, USL, U1T12, U1T48, U1TD1, U1TD3, U1TDX, U1TO3, U1TS1, U1TVX, UC1BC, UC1BL, UC1CC, UC1CL, UC1DC, UC1DL, UC1EC, UC1EL, UC1FC, UC1FL, UC1GC, UC1GL, UC1HC, UC1HL, UDL12, UDL48, UDLO3, UDLSX, UE3, ULD12, ULD48, ULDD1, ULDD3, ULDDX, ULDO3, ULDS1, ULDVX, UNC1X, UNC3X, UNCDX, UNCNX, UNCSX, UNCVX, UNLD1, UNLD3, UXTD1, UXTD3, UXTS1, U1TUC, U1TUD, U1TUB, U1TUA	SDASP		200.00									
UNBUNDLED EXCHANGE ACCESS LOOP																
	2-WIRE ANALOG VOICE GRADE LOOP															
	2-Wire Analog Voice Grade Loop - Service Level 1- Zone 1		1	UEANL	UEAL2	14.94	37.92	17.62	23.56	5.32		15.69				
	2-Wire Analog Voice Grade Loop - Service Level 1- Zone 2		2	UEANL	UEAL2	21.39	37.92	17.62	23.56	5.32		15.69				
	2-Wire Analog Voice Grade Loop - Service Level 1- Zone 3		3	UEANL	UEAL2	26.72	37.92	17.62	23.56	5.32		15.69				
	Unbundled Miscellaneous Rate Element, Tag Loop at End User Premise			UEANL	URETL		8.33	0.83				15.69				
	Loop Testing - Basic 1st Half Hour			UEANL	URET1		34.23	34.23				15.69				
	Loop Testing - Basic Additional Half Hour			UEANL	URETA		19.90	19.90				15.69				
	CLEC to CLEC Conversion Charge Without Outside Dispatch (UVL-SL1)			UEANL	UREWO		15.81	8.96				15.69				
	Unbundled Voice Loop, Non-Design Voice Loop, billing for BST providing make-up (Engineering Information - E.I.)			UEANL	UEANM		13.47	13.47								
	Manual Order Coordination for UVL-SL1s (per loop)			UEANL	UEAMC		8.17	8.17								

UNBUNDLED NETWORK ELEMENTS - South Carolina														Attachment: 2		Exhibit: B	
CATEGORY	RATE ELEMENTS	Interim	Zone	BCS	USOC	RATES ($)					Svc Order Submitted Elec per LSR	Svc Order Submitted Manually per LSR	Incremental Charge - Manual Svc Order vs. Electronic-1st	Incremental Charge - Manual Svc Order vs. Electronic-Add'l	Incremental Charge - Manual Svc Order vs. Electronic-Disc 1st	Incremental Charge - Manual Svc Order vs. Electronic-Disc Add'l
						Rec	Nonrecurring		Nonrecurring Disconnect		OSS Rates($)					
							First	Add'l	First	Add'l	SOMEC	SOMAN	SOMAN	SOMAN	SOMAN	SOMAN
	Order Coordination for Specified Conversion Time for UVL-SL1 (per LSR)			UEANL	OCOSL		18.13	18.13								
2-WIRE Unbundled COPPER LOOP																
	2-Wire Unbundled Copper Loop - Non-Designed Zone 1	I	1	UEQ	UEQ2X	12.94	36.40	16.10	22.66	4.42		15.69				
	2 Wire Unbundled Copper Loop - Non-Designed - Zone 2	I	2	UEQ	UEQ2X	14.51	36.40	16.10	22.66	4.42		15.69				
	2 Wire Unbundled Copper Loop - Non-Designed - Zone 3	I	3	UEQ	UEQ2X	15.02	36.40	16.10	22.66	4.42		15.69				
	Unbundled Miscellaneous Rate Element, Tag Loop at End User Premise			UEQ	URETL		8.33	0.83				15.69				
	Order Coordination 2 Wire Unbundled Copper Loop - Non-Designed (per loop)			UEQ	USBMC		8.17	8.17								
	Unbundled Copper Loop, Non-Design Copper Loop, billing for BST providing make-up (Engineering Information - E.I.)			UEQ	UEQMU		13.47	13.47				15.69				
	Loop Testing - Basic 1st Half Hour			UEQ	URET1		34.23	34.23				15.69				
	Loop Testing - Basic Additional Half Hour			UEQ	URETA		19.90	19.90				15.69				
	CLEC to CLEC Conversion Charge Without Outside Dispatch (UCL-ND)			UEQ	UREWO		14.30	7.45				15.69				
UNBUNDLED EXCHANGE ACCESS LOOP																
2-WIRE ANALOG VOICE GRADE LOOP																
	2 Wire Analog Voice Grade Loop-Service Level 1-Line Splitting-Zone 1		1	UEPSR UEPSB	UEALS	14.94	37.92	17.62	23.56	5.32		15.69				
	2 Wire Analog Voice Grade Loop-Service Level 1-Line Splitting-Zone 1		1	UEPSR UEPSB	UEABS	14.94	37.92	17.62	23.56	5.32		15.69				
	2 Wire Analog Voice Grade Loop- Service Level 1-Line Splitting-Zone 2		2	UEPSR UEPSB	UEALS	21.39	37.92	17.62	23.56	5.32		15.69				
	2 Wire Analog Voice Grade Loop- Service Level 1-Line Splitting-Zone 2		2	UEPSR UEPSB	UEABS	21.39	37.92	17.62	23.56	5.32		15.69				
	2 Wire Analog Voice Grade Loop-Service Level 1-Line Splitting-Zone 3		3	UEPSR UEPSB	UEALS	26.72	37.92	17.62	23.56	5.32		15.69				
	2 Wire Analog Voice Grade Loop-Service Level 1-Line Splitting-Zone 3		3	UEPSR UEPSB	UEABS	26.72	37.92	17.62	23.56	5.32		15.69				
UNBUNDLED EXCHANGE ACCESS LOOP																
2-WIRE ANALOG VOICE GRADE LOOP																
	2-Wire Analog Voice Grade Loop - Service Level 2 w/Loop or Ground Start Signaling - Zone 1		1	UEA	UEAL2	16.68	105.98	68.43	53.05	10.61		15.69				
	2-Wire Analog Voice Grade Loop - Service Level 2 w/Loop or Ground Start Signaling - Zone 2		2	UEA	UEAL2	23.13	105.98	68.43	53.05	10.61		15.69				
	2-Wire Analog Voice Grade Loop - Service Level 2 w/Loop or Ground Start Signaling - Zone 3		3	UEA	UEAL2	28.46	105.98	68.43	53.05	10.61		15.69				
	Order Coordination for Specified Conversion Time (per LSR)			UEA	OCOSL		18.13									
	2-Wire Analog Voice Grade Loop - Service Level 2 w/Reverse Battery Signaling - Zone 1		1	UEA	UEAR2	16.68	105.98	68.43	53.05	10.61		15.69				
	2-Wire Analog Voice Grade Loop - Service Level 2 w/Reverse Battery Signaling - Zone 2		2	UEA	UEAR2	23.13	105.98	68.43	53.05	10.61		15.69				
	2-Wire Analog Voice Grade Loop - Service Level 2 w/Reverse Battery Signaling - Zone 3		3	UEA	UEAR2	28.46	105.98	68.43	53.05	10.61		15.69				
	Order Coordination for Specified Conversion Time (per LSR)			UEA	OCOSL		18.13									
	CLEC to CLEC Conversion Charge without outside dispatch			UEA	UREWO		87.90	36.44				15.69				
	Loop Tagging - Service Level 2 (SL2)			UEA	URETL		11.24	1.10				15.69				
4-WIRE ANALOG VOICE GRADE LOOP																
	4-Wire Analog Voice Grade Loop - Zone 1		1	UEA	UEAL4	32.59	132.38	94.83	59.35	14.61		15.69				
	4-Wire Analog Voice Grade Loop - Zone 2		2	UEA	UEAL4	43.89	132.38	94.83	59.35	14.61		15.69				
	4-Wire Analog Voice Grade Loop - Zone 3		3	UEA	UEAL4	43.38	132.38	94.83	59.35	14.61		15.69				
	Order Coordination for Specified Conversion Time (per LSR)			UEA	OCOSL		18.13									
	CLEC to CLEC Conversion Charge without outside dispatch			UEA	UREWO		87.90	36.44				15.69				
2-WIRE ISDN DIGITAL GRADE LOOP																
	2-Wire ISDN Digital Grade Loop - Zone 1		1	UDN	U1L2X	25.21	117.58	80.03	53.05	10.61		15.69				
	2-Wire ISDN Digital Grade Loop - Zone 2		2	UDN	U1L2X	32.76	117.58	80.03	53.05	10.61		15.69				
	2-Wire ISDN Digital Grade Loop - Zone 3		3	UDN	U1L2X	37.70	117.58	80.03	53.05	10.61		15.69				
	Order Coordination For Specified Conversion Time (per LSR)			UDN	OCOSL		18.13									

UNBUNDLED NETWORK ELEMENTS - South Carolina														Attachment: 2		Exhibit: B	
CATEGORY	RATE ELEMENTS	Interim	Zone	BCS	USOC	RATES ($)					Svc Order Submitted Elec per LSR	Svc Order Submitted Manually per LSR	Incremental Charge - Manual Svc Order vs. Electronic-1st	Incremental Charge - Manual Svc Order vs. Electronic-Add'l	Incremental Charge - Manual Svc Order vs. Electronic-Disc 1st	Incremental Charge - Manual Svc Order vs. Electronic-Disc Add'l
						Rec	Nonrecurring		Nonrecurring Disconnect		OSS Rates($)					
							First	Add'l	First	Add'l	SOMEC	SOMAN	SOMAN	SOMAN	SOMAN	SOMAN
	CLEC to CLEC Conversion Charge without outside dispatch			UDN	UREWO		91.82	44.25				15.69				
2-WIRE Universal Digital Channel (UDC) COMPATIBLE LOOP																
	2-Wire Universal Digital Channel (UDC) Compatible Loop - Zone 1		1	UDC	UDC2X	25.21	117.58	80.03	53.05	10.61		15.69				
	2-Wire Universal Digital Channel (UDC) Compatible Loop - Zone 2		2	UDC	UDC2X	32.76	117.58	80.03	53.05	10.61		15.69				
	2-Wire Universal Digital Channel (UDC) Compatible Loop - Zone 3		3	UDC	UDC2X	37.70	117.58	80.03	53.05	10.61		15.69				
	CLEC to CLEC Conversion Charge without outside dispatch			UDC	UREWO		91.82	44.25				15.69				
2-WIRE ASYMMETRICAL DIGITAL SUBSCRIBER LINE (ADSL) COMPATIBLE LOOP																
	2 Wire Unbundled ADSL Loop including manual service inquiry & facility reservation - Zone 1		1	UAL	UAL2X	12.19	120.84	70.56	50.37	7.93		15.69				
	2 Wire Unbundled ADSL Loop including manual service inquiry & facility reservation - Zone 2		2	UAL	UAL2X	13.71	120.84	70.56	50.37	7.93		15.69				
	2 Wire Unbundled ADSL Loop including manual service inquiry & facility reservation - Zone 3		3	UAL	UAL2X	14.14	120.84	70.56	50.37	7.93		15.69				
	Order Coordination for Specified Conversion Time (per LSR)			UAL	OCOSL		18.13									
	2 Wire Unbundled ADSL Loop without manual service inquiry & facility reservaton - Zone 1		1	UAL	UAL2W	12.19	95.81	57.82	50.37	7.93		15.69				
	2 Wire Unbundled ADSL Loop without manual service inquiry & facility reservaton - Zone 2		2	UAL	UAL2W	13.71	95.81	57.82	50.37	7.93		15.69				
	2 Wire Unbundled ADSL Loop without manual service inquiry & facility reservaton - Zone 3		3	UAL	UAL2W	14.14	95.81	57.82	50.37	7.93		15.69				
	Order Coordination for Specified Conversion Time (per LSR)			UAL	OCOSL		18.13									
	CLEC to CLEC Conversion Charge without outside dispatch			UAL	UREWO		86.38	40.48				15.69				
2-WIRE HIGH BIT RATE DIGITAL SUBSCRIBER LINE (HDSL) COMPATIBLE LOOP																
	2 Wire Unbundled HDSL Loop including manual service inquiry & facility reservation - Zone 1		1	UHL	UHL2X	9.58	129.52	79.24	50.37	7.93		15.69				
	2 Wire Unbundled HDSL Loop including manual service inquiry & facility reservation - Zone 2		2	UHL	UHL2X	10.92	129.52	79.24	50.37	7.93		15.69				
	2 Wire Unbundled HDSL Loop including manual service inquiry & facility reservation - Zone 3		3	UHL	UHL2X	11.40	129.52	79.24	50.37	7.93		15.69				
	Order Coordination for Specified Conversion Time (per LSR)			UHL	OCOSL		18.13									
	2 Wire Unbundled HDSL Loop without manual service inquiry and facility reservation - Zone 1		1	UHL	UHL2W	9.58	104.49	66.50	50.37	7.93		15.69				
	2 Wire Unbundled HDSL Loop without manual service inquiry and facility reservation - Zone 2		2	UHL	UHL2W	10.92	104.49	66.50	50.37	7.93		15.69				
	2 Wire Unbundled HDSL Loop without manual service inquiry and facility reservation - Zone 3		3	UHL	UHL2W	11.40	104.49	66.50	50.37	7.93		15.69				
	Order Coordination for Specified Conversion Time (per LSR)			UHL	OCOSL		18.13									
	CLEC to CLEC Conversion Charge without outside dispatch			UHL	UREWO		86.32	40.48				15.69				
4-WIRE HIGH BIT RATE DIGITAL SUBSCRIBER LINE (HDSL) COMPATIBLE LOOP																
	4 Wire Unbundled HDSL Loop including manual service inquiry and facility reservation - Zone 1		1	UHL	UHL4X	16.02	158.18	107.89	55.12	10.38		15.69				
	4-Wire Unbundled HDSL Loop including manual service inquiry and facility reservation - Zone 2		2	UHL	UHL4X	14.33	158.18	107.89	55.12	10.38		15.69				
	4-Wire Unbundled HDSL Loop including manual service inquiry and facility reservation - Zone 3		3	UHL	UHL4X	16.84	158.18	107.89	55.12	10.38		15.69				
	Order Coordination for Specified Conversion Time (per LSR)			UHL	OCOSL		18.13									
	4-Wire Unbundled HDSL Loop without manual service inquiry and facility reservation - Zone 1		1	UHL	UHL4W	16.02	133.14	95.16	55.12	10.38		15.69				
	4-Wire Unbundled HDSL Loop without manual service inquiry and facility reservation - Zone 2		2	UHL	UHL4W	14.33	133.14	95.16	55.12	10.38		15.69				
	4-Wire Unbundled HDSL Loop without manual service inquiry and facility reservation - Zone 3		3	UHL	UHL4W	16.84	133.14	95.16	55.12	10.38		15.69				
	Order Coordination for Specified Conversion Time (per LSR)			UHL	OCOSL		18.13									
	CLEC to CLEC Conversion Charge without outside dispatch			UHL	UREWO		86.32	40.48				15.69				
4-WIRE DS1 DIGITAL LOOP																
	4-Wire DS1 Digital Loop - Zone 1		1	USL	USLXX	79.51	253.03	157.89	44.80	11.73		15.69				

UNBUNDLED NETWORK ELEMENTS - South Carolina														Attachment: 2		Exhibit: B	
CATEGORY	RATE ELEMENTS	Interim	Zone	BCS	USOC	RATES ($)					Svc Order Submitted Elec per LSR	Svc Order Submitted Manually per LSR	Incremental Charge - Manual Svc Order vs. Electronic-1st	Incremental Charge - Manual Svc Order vs. Electronic-Add'l	Incremental Charge - Manual Svc Order vs. Electronic-Disc 1st	Incremental Charge - Manual Svc Order vs. Electronic-Disc Add'l
						Rec	Nonrecurring		Nonrecurring Disconnect		OSS Rates($)					
							First	Add'l	First	Add'l	SOMEC	SOMAN	SOMAN	SOMAN	SOMAN	SOMAN
	4-Wire DS1 Digital Loop - Zone 2		2	USL	USLXX	136.00	253.03	157.89	44.80	11.73		15.69				
	4-Wire DS1 Digital Loop - Zone 3		3	USL	USLXX	229.15	253.03	157.89	44.80	11.73		15.69				
	Order Coordination for Specified Conversion Time (per LSR)			USL	OCOSL		18.13									
	CLEC to CLEC Conversion Charge without outside dispatch			USL	UREWO		101.30	43.13				15.69				
4-WIRE 19.2, 56 OR 64 KBPS DIGITAL GRADE LOOP																
	4 Wire Unbundled Digital 19.2 Kbps		1	UDL	UDL19	29.93	126.66	89.12	59.35	14.61		15.69				
	4 Wire Unbundled Digital 19.2 Kbps		2	UDL	UDL19	33.99	126.66	89.12	59.35	14.61		15.69				
	4 Wire Unbundled Digital 19.2 Kbps		3	UDL	UDL19	34.74	126.66	89.12	59.35	14.61		15.69				
	4 Wire Unbundled Digital Loop 56 Kbps - Zone 1		1	UDL	UDL56	29.93	126.66	89.12	59.35	14.61		15.69				
	4 Wire Unbundled Digital Loop 56 Kbps - Zone 2		2	UDL	UDL56	33.99	126.66	89.12	59.35	14.61		15.69				
	4 Wire Unbundled Digital Loop 56 Kbps - Zone 3		3	UDL	UDL56	34.74	126.66	89.12	59.35	14.61		15.69				
	Order Coordination for Specified Conversion Time (per LSR)			UDL	OCOSL		18.13									
	4 Wire Unbundled Digital Loop 64 Kbps - Zone 1		1	UDL	UDL64	29.93	126.66	89.12	59.35	14.61		15.69				
	4 Wire Unbundled Digital Loop 64 Kbps - Zone 2		2	UDL	UDL64	33.99	126.66	89.12	59.35	14.61		15.69				
	4 Wire Unbundled Digital Loop 64 Kbps - Zone 3		3	UDL	UDL64	34.74	126.66	89.12	59.35	14.61		15.69				
	Order Coordination for Specified Conversion Time (per LSR)			UDL	OCOSL		18.13									
	CLEC to CLEC Conversion Charge without outside dispatch			UDL	UREWO		102.34	49.85				15.69				
2-WIRE Unbundled COPPER LOOP																
	2-Wire Unbundled Copper Loop/Short including manual service inquiry & facility reservation - Zone 1		1	UCL	UCLPB	12.19	119.91	69.62	50.37	7.93		15.69				
	2-Wire Unbundled Copper Loop/Short including manual service inquiry & facility reservation - Zone 2		2	UCL	UCLPB	13.71	119.91	69.62	50.37	7.93		15.69				
	2 Wire Unbundled Copper Loop/Short including manual service inquiry & facility reservation - Zone 3		3	UCL	UCLPB	14.14	119.91	69.62	50.37	7.93		15.69				
	Order Coordination for Unbundled Copper Loops (per loop)			UCL	UCLMC		8.17	8.17								
	2-Wire Unbundled Copper Loop/Short without manual service inquiry and facility reservation - Zone 1		1	UCL	UCLPW	12.19	94.87	56.89	50.37	7.93		15.69				
	2-Wire Unbundled Copper Loop/Short without manual service inquiry and facility reservation - Zone 2		2	UCL	UCLPW	13.71	94.87	56.89	50.37	7.93		15.69				
	2-Wire Unbundled Copper Loop/Short without manual service inquiry and facility reservation - Zone 3		3	UCL	UCLPW	14.14	94.87	56.89	50.37	7.93		15.69				
	Order Coordination for Unbundled Copper Loops (per loop)			UCL	UCLMC		8.17	8.17								
	2-Wire Unbundled Copper Loop/Long - includes manual srvc. inquiry and facility reservation - Zone 1		1	UCL	UCL2L	38.22	119.91	69.62	50.37	7.93		15.69				
	2-Wire Unbundled Copper Loop/Long - includes manual svc. inquiry and facility reservation - Zone 2		2	UCL	UCL2L	55.33	119.91	69.62	50.37	7.93		15.69				
	2-Wire Unbundled Copper Loop/Long - includes manual svc. inquiry and facility reservation - Zone 3		3	UCL	UCL2L	67.95	119.91	69.62	50.37	7.93		15.69				
	Order Coordination for Unbundled Copper Loops (per loop)			UCL	UCLMC		8.17	8.17								
	2-Wire Unbundled Copper Loop/Long - without manual service inquiry and facility reservation - Zone 1		1	UCL	UCL2W	38.22	94.87	56.89	50.37	7.93		15.69				
	2-Wire Unbundled Copper Loop/Long - without manual service inquiry and facility reservation - Zone 2		2	UCL	UCL2W	55.33	94.87	56.89	50.37	7.93		15.69				
	2-Wire Unbundled Copper Loop/Long - without manual service inquiry and facility reservation - Zone 3		3	UCL	UCL2W	67.95	94.87	56.89	50.37	7.93		15.69				
	Order Coordination for Unbundled Copper Loops (per loop)			UCL	UCLMC		8.17	8.17								
	CLEC to CLEC Conversion Charge without outside dispatch (UCL-Des)			UCL	UREWO		94.87	42.57				15.69				
4-WIRE COPPER LOOP																
	4-Wire Copper Loop/Short - including manual service inquiry and facility reservation - Zone 1		1	UCL	UCL4S	19.64	144.17	93.88	55.12	10.38		15.69				
	4-Wire Copper Loop/Short - including manual service inquiry and facility reservation - Zone 2		2	UCL	UCL4S	20.90	144.17	93.88	55.12	10.38		15.69				
	4-Wire Copper Loop/Short - including manual service inquiry and facility reservation - Zone 3		3	UCL	UCL4S	19.34	144.17	93.88	55.12	10.38		15.69				
	Order Coordination for Unbundled Copper Loops (per loop)			UCL	UCLMC		8.17	8.17								
	4-Wire Copper Loop/Short - without manual service inquiry and facility reservation - Zone 1		1	UCL	UCL4W	19.64	119.13	81.15	55.12	10.38		15.69				

UNBUNDLED NETWORK ELEMENTS - South Carolina														Attachment: 2		Exhibit: B	
CATEGORY		RATE ELEMENTS	Interim	Zone	BCS	USOC	RATES ($)					Svc Order Submitted Elec per LSR	Svc Order Submitted Manually per LSR	Incremental Charge - Manual Svc Order vs. Electronic-1st	Incremental Charge - Manual Svc Order vs. Electronic-Add'l	Incremental Charge - Manual Svc Order vs. Electronic-Disc 1st	Incremental Charge - Manual Svc Order vs. Electronic-Disc Add'l
							Rec	Nonrecurring		Nonrecurring Disconnect		OSS Rates($)					
								First	Add'l	First	Add'l	SOMEC	SOMAN	SOMAN	SOMAN	SOMAN	SOMAN
		4-Wire Copper Loop/Short - without manual service inquiry and facility reservation - Zone 2		2	UCL	UCL4W	20.90	119.13	81.15	55.12	10.38		15.69				
		4-Wire Copper Loop/Short - without manual service inquiry and facility reservation - Zone 3		3	UCL	UCL4W	19.34	119.13	81.15	55.12	10.38		15.69				
		Order Coordination for Unbundled Copper Loops (per loop)			UCL	UCLMC		8.17	8.17								
		4-Wire Unbundled Copper Loop/Long - includes manual svc. inquiry and facility reservation - Zone 1		1	UCL	UCL4L	77.29	144.17	93.88	55.12	10.38		15.69				
		4-Wire Unbundled Copper Loop/Long - includes manual svc. inquiry and facility reservation - Zone 2		2	UCL	UCL4L	118.78	144.17	93.88	55.12	10.38		15.69				
		4-Wire Unbundled Copper Loop/Long - includes manual svc. inquiry and facility reservation - Zone 3		3	UCL	UCL4L	144.10	144.17	93.88	55.12	10.38		15.69				
		Order Coordination for Unbundled Copper Loops (per loop)			UCL	UCLMC		8.17	8.17								
		4-Wire Unbundled Copper Loop/Long - without manual svc. inquiry and facility reservation - Zone 1		1	UCL	UCL4O	77.29	119.44	81.45	55.12	10.38		15.69				
		4-Wire Unbundled Copper Loop/Long - without manual svc. inquiry and facility reservation - Zone 2		2	UCL	UCL4O	118.78	119.44	81.45	55.12	10.38		15.69				
		4-Wire Unbundled Copper Loop/Long - without manual svc. inquiry and facility reservation - Zone 3		3	UCL	UCL4O	144.10	119.44	81.45	55.12	10.38		15.69				
		Order Coordination for Unbundled Copper Loops (per loop)			UCL	UCLMC		8.17	8.17								
		CLEC to CLEC Conversion Charge without outside dispatch (UCL-Des)			UCL	UREWO		94.87	42.57				15.69				
LOOP MODIFICATION																	
		Unbundled Loop Modification, Removal of Load Coils - 2 Wire pair less than or equal to 18k ft			UAL, UHL, UCL, UEQ, ULS, UEA, UEANL, UEPSR, UEPSB	ULM2L		32.46	32.46				15.69				
		Unbundled Loop Modification, Removal of Load Coils - 2 wire greater than 18k ft			UCL, ULS, UEQ	ULM2G		170.89	170.89				15.69				
		Unbundled Loop Modification Removal of Load Coils - 4 Wire less than or equal to 18K ft			UHL, UCL, UEA	ULM4L		32.46	32.46				15.69				
		Unbundled Loop Modification Removal of Load Coils - 4 Wire pair greater than 18k ft			UCL	ULM4G		170.89	170.89				15.69				
		Unbundled Loop Modification Removal of Bridged Tap Removal, per unbundled loop			UAL, UHL, UCL, UEQ, ULS, UEA, UEANL, UEPSR, UEPSB	ULMBT		32.48	32.48				15.69				
SUB-LOOPS																	
	Sub-Loop Distribution																
		Sub-Loop - Per Cross Box Location - CLEC Feeder Facility Set-Up	I		UEANL	USBSA		241.42	241.42				15.69				
		Sub-Loop - Per Cross Box Location - Per 25 Pair Panel Set-Up	I		UEANL	USBSB		22.69	22.69				15.69				
		Sub-Loop - Per Building Equipment Room - CLEC Feeder Facility Set-Up	I		UEANL	USBSC		177.84	177.84				15.69				
		Sub-Loop - Per Building Equipment Room - Per 25 Pair Panel Set-Up	I		UEANL	USBSD		55.58	55.58				15.69				
		Sub-Loop Distribution Per 2-Wire Analog Voice Grade Loop - Zone 1	I	1	UEANL	USBN2	8.87	65.94	31.03	45.35	6.71		15.69				
		Sub-Loop Distribution Per 2-Wire Analog Voice Grade Loop - Zone 2	I	2	UEANL	USBN2	12.58	65.94	31.03	45.35	6.71		15.69				
		Sub-Loop Distribution Per 2-Wire Analog Voice Grade Loop - Zone 3	I	3	UEANL	USBN2	14.79	65.94	31.03	45.35	6.71		15.69				
		Order Coordination for Unbundled Sub-Loops, per sub-loop pair			UEANL	USBMC		8.17	8.17								
		Sub-Loop Distribution Per 4-Wire Analog Voice Grade Loop - Zone 1		1	UEANL	USBN4	14.11	79.21	44.29	49.82	9.09		15.69				
		Sub-Loop Distribution Per 4-Wire Analog Voice Grade Loop - Zone 2		2	UEANL	USBN4	19.40	79.21	44.29	49.82	9.09		15.69				

UNBUNDLED NETWORK ELEMENTS - South Carolina														Attachment: 2		Exhibit: B	
CATEGORY		RATE ELEMENTS	Interim	Zone	BCS	USOC	RATES ($)					Svc Order Submitted Elec per LSR	Svc Order Submitted Manually per LSR	Incremental Charge - Manual Svc Order vs. Electronic-1st	Incremental Charge - Manual Svc Order vs. Electronic-Add'l	Incremental Charge - Manual Svc Order vs. Electronic-Disc 1st	Incremental Charge - Manual Svc Order vs. Electronic-Disc Add'l
							Rec	Nonrecurring		Nonrecurring Disconnect		OSS Rates($)					
								First	Add'l	First	Add'l	SOMEC	SOMAN	SOMAN	SOMAN	SOMAN	SOMAN
		Sub-Loop Distribution Per 4-Wire Analog Voice Grade Loop - Zone 3		3	UEANL	USBN4	18.90	79.21	44.29	49.82	9.09		15.69				
		Order Coordination for Unbundled Sub-Loops, per sub-loop pair			UEANL	USBMC		8.17	8.17								
		Sub-Loop 2-Wire Intrabuilding Network Cable (INC)	I		UEANL	USBR2	2.41	53.13	18.21	45.35	6.71		15.69				
		Order Coordination for Unbundled Sub-Loops, per sub-loop pair			UEANL	USBMC		8.17	8.17								
		Sub-Loop 4-Wire Intrabuilding Network Cable (INC)	I		UEANL	USBR4	5.36	59.38	24.47	49.82	9.09		15.69				
		Order Coordination for Unbundled Sub-Loops, per sub-loop pair			UEANL	USBMC		8.17	8.17								
		2 Wire Copper Unbundled Sub-Loop Distribution - Zone 1	I	1	UEF	UCS2X	7.11	65.94	31.03	45.35	6.71		15.69				
		2 Wire Copper Unbundled Sub-Loop Distribution - Zone 2	I	2	UEF	UCS2X	9.83	65.94	31.03	45.35	6.71		15.69				
		2 Wire Copper Unbundled Sub-Loop Distribution - Zone 3	I	3	UEF	UCS2X	10.48	65.94	31.03	45.35	6.71		15.69				
		Order Coordination for Unbundled Sub-Loops, per sub-loop pair			UEF	USBMC		8.17	8.17								
		4 Wire Copper Unbundled Sub-Loop Distribution - Zone 1	I	1	UEF	UCS4X	7.85	79.21	44.29	49.82	9.09		15.69				
		4 Wire Copper Unbundled Sub-Loop Distribution - Zone 2	I	2	UEF	UCS4X	14.17	79.21	44.29	49.82	9.09		15.69				
		4 Wire Copper Unbundled Sub-Loop Distribution - Zone 3	I	3	UEF	UCS4X	12.64	79.21	44.29	49.82	9.09		15.69				
		Order Coordination for Unbundled Sub-Loops, per sub-loop pair			UEF	USBMC		8.17	8.17								
	Unbundled Network Terminating Wire (UNTW)																
		Unbundled Network Terminating Wire (UNTW) per Pair			UENTW	UENPP	0.3303	30.20	30.20				15.69				
	Network Interface Device (NID)																
		Network Interface Device (NID) - 1-2 lines			UENTW	UND12		43.68	28.79				15.69				
		Network Interface Device (NID) - 1-6 lines			UENTW	UND16		64.42	49.53				15.69				
		Network Interface Device Cross Connect - 2 W			UENTW	UNDC2		5.92	5.92				15.69				
		Network Interface Device Cross Connect - 4W			UENTW	UNDC4		5.92	5.92				15.69				
SUB-LOOPS																	
	Sub-Loop Feeder																
		USL-Feeder, DS0 Set-up per Cross Box location - CLEC Distribution Facility set-up			UEA, UDN,UCL,UDL,UDC	USBFW		241.42					15.69				
		USL Feeder - DS0 Set-up per Cross Box location - per 25 pair set-up			UEA, UDN,UCL,UDL,UDC	USBFX		22.69	22.69				15.69				
		USL Feeder DS1 Set-up at DSX location, per DS1 termination			USL	USBFZ		523.87	11.34				15.69				
		Unbundled Sub-Loop Feeder Loop, 2 Wire Ground Start, Voice Grade - Zone 1		1	UEA	USBFA	8.93	93.28	56.69	54.68	13.74		15.69				
		Unbundled Sub-Loop Feeder Loop, 2 Wire Ground-Start, Voice Grade - Zone 2		2	UEA	USBFA	11.74	93.28	56.69	54.68	13.74		15.69				
		Unbundled Sub-Loop Feeder Loop, Per 2 Wire Ground-Start, Voice Grade - Zone 3		3	UEA	USBFA	14.74	93.28	56.69	54.68	13.74		15.69				
		Order Coordination for Specified Conversion Time, per LSR			UEA	OCOSL		18.13									
		Unbundlde Sub-Loop Feeder Loop, 2 Wire Loop-Start, Voice Grade - Zone 1		1	UEA	USBFB	8.93	93.28	56.69	54.68	13.74		15.69				
		Unbundled Sub-Loop Feeder Loop, 2 Wire Loop-Start, Voice Grade - Zone 2		2	UEA	USBFB	11.74	93.28	56.69	54.68	13.74		15.69				
		Unbundled Sub-Loop Feeder Loop, 2 Wire Start Loop, Voice Grade - Zone 3		3	UEA	USBFB	14.74	93.28	56.69	54.68	13.74		15.69				
		Order Coordination for Specified Time Conversion, per LSR			UEA	OCOSL		18.13									
		Unbundled Sub-Loop Feeder Loop, 2 Wire Reverse Battery, Voice Grade - Zone 1		1	UEA	USBFC	8.93	93.28	56.69	54.68	13.74		15.69				
		Unbundled Sub-Loop Feeder Loop, 2 Wire Reverse Battery, Voice Grade - Zone 2		2	UEA	USBFC	11.74	93.28	56.69	54.68	13.74		15.69				
		Unbundled Sub-Loop Feeder Loop, 2 Wire Analog Reverse Battery, Voice Grade - Zone 3		3	UEA	USBFC	14.74	93.28	56.69	54.68	13.74		15.69				
		Order Coordination For Specified Conversion Time, per LSR			UEA	OCOSL		18.13									
		Unbundled Sub-Loop Feeder Loop, 4 Wire Ground-Start, Voice Grade - Zone 1		1	UEA	USBFD	21.63	107.91	70.36	62.26	17.52		15.69				
		Unbundled Sub-Loop Feeder Loop, 4 Wire Ground-Start, Voice Grade - Zone 2		2	UEA	USBFD	27.57	107.91	70.36	62.26	17.52		15.69				

UNBUNDLED NETWORK ELEMENTS - South Carolina														Attachment: 2		Exhibit: B	
CATEGORY		RATE ELEMENTS	Interim	Zone	BCS	USOC	RATES ($)					Svc Order Submitted Elec per LSR	Svc Order Submitted Manually per LSR	Incremental Charge - Manual Svc Order vs. Electronic-1st	Incremental Charge - Manual Svc Order vs. Electronic-Add'l	Incremental Charge - Manual Svc Order vs. Electronic-Disc 1st	Incremental Charge - Manual Svc Order vs. Electronic-Disc Add'l
							Rec	Nonrecurring		Nonrecurring Disconnect				OSS Rates($)			
								First	Add'l	First	Add'l	SOMEC	SOMAN	SOMAN	SOMAN	SOMAN	SOMAN
		Unbundled Sub-Loop Feeder Loop, 4 Wire Ground Start, Voice Grade - Zone 3		3	UEA	USBFD	26.04	107.91	70.36	62.26	17.52		15.69				
		Order Coordination For Specified Conversion Time, Per LSR			UEA	OCOSL		18.13									
		Unbundled Sub-Loop Feeder Loop, 4 Wire Loop-Start, Voice Grade - Zone 1		1	UEA	USBFE	21.63	107.91	70.36	62.26	17.52		15.69				
		Unbundled Sub-Loop Feeder Loop, 4 Wire Loop-Start, Voice Grade - Zone 2		2	UEA	USBFE	27.57	107.91	70.36	62.26	17.52		15.69				
		Unbundled Sub-Loop Feeder Loop, 4 Wire Loop-Start, Voice Grade - Zone 3		3	UEA	USBFE	26.04	107.91	70.36	62.26	17.52		15.69				
		Order Coordination For Specified Conversion Time, Per LSR			UEA	OCOSL		18.13									
		Unbundled Sub-Loop Feeder Loop, 2 Wire ISDN BRI - Zone 1		1	UDN	USBFF	17.05	106.47	68.92	55.81	13.37		15.69				
		Unbundled Sub-Loop Feeder Loop, 2-Wire ISDN BRI - Zone 2		2	UDN	USBFF	20.92	106.47	68.92	55.81	13.37		15.69				
		Unbundled Sub-Loop Feeder Loop, 2-Wire ISDN BRI - Zone 3		3	UDN	USBFF	23.49	106.47	68.92	55.81	13.37		15.69				
		Order Coordination For Specified Conversion Time, Per LSR			UDN	OCOSL		18.13									
		Unbundled Sub-Loop Feeder, 2 Wire UDC (IDSL compatible)		1	UDC	USBFS	17.05	106.47	68.92	55.81	13.37		15.69				
		Unbundled Sub-Loop Feeder, 2 Wire UDC (IDSL compatible)		2	UDC	USBFS	20.92	106.47	68.92	55.81	13.37		15.69				
		Unbundled Sub-Loop Feeder, 2 Wire UDC (IDSL compatible)		3	UDC	USBFS	23.49	106.47	68.92	55.81	13.37		15.69				
		Unbundled Sub-Loop Feeder Loop, 4-Wire DS1 - Zone 1		1	USL	USBFG	55.85	102.19	64.64	62.26	17.52		15.69				
		Unbundled Sub-Loop Feeder Loop, 4-Wire DS1 - Zone 2		2	USL	USBFG	109.16	102.19	64.64	62.26	17.52		15.69				
		Unbundled Sub-Loop Feeder Loop, 4-Wire DS1 - Zone 3		3	USL	USBFG	203.35	102.19	64.64	62.26	17.52		15.69				
		Order Coordination For Specified Conversion Time, Per LSR			USL	OCOSL		18.13									
		Unbundled Sub-Loop Feeder, 2-Wire Copper Loop - Zone 1		1	UCL	USBFH	5.98	83.97	46.42	53.14	10.69		15.69				
		Unbundled Sub-Loop Feeder Loop, 2-Wire Copper Loop - Zone 2		2	UCL	USBFH	4.80	83.97	46.42	53.14	10.69		15.69				
		Unbundled Sub-Loop Feeder Loop, 2-Wire Copper Loop - Zone 3		3	UCL	USBFH	4.59	83.97	46.42	53.14	10.69		15.69				
		Order Coordination For Specified Conversion Time, per LSR			UCL	OCOSL		18.13									
		Sub-Loop Feeder - Per 4-Wire Copper Loop - Zone 1		1	UCL	USBFJ	13.21	101.22	63.67	58.03	13.29		15.69				
		Sub-Loop Feeder - Per 4-Wire Copper Loop - Zone 2		2	UCL	USBFJ	8.28	101.22	63.67	58.03	13.29		15.69				
		Sub-Loop Feeder - Per 4-Wire Copper Loop - Zone 3		3	UCL	USBFJ	8.42	101.22	63.67	58.03	13.29		15.69				
		Order Coordination For Specified Conversion Time, per LSR			UCL	OCOSL		18.13									
		Sub-Loop Feeder - Per 4-Wire 19.2 Kbps Digital Grade Loop		1	UDL	USBFN	21.02	102.19	64.64	62.26	17.52		15.69				
		Sub-Loop Feeder - Per 4-Wire 19.2 Kbps Digital Grade Loop		2	UDL	USBFN	21.30	102.19	64.64	62.26	17.52		15.69				
		Sub-Loop Feeder - Per 4-Wire 19.2 Kbps Digital Grade Loop		3	UDL	USBFN	20.17	102.19	64.64	62.26	17.52		15.69				
		Sub-Loop Feeder - Per 4-Wire 56 Kbps Digital Grade Loop - Zone 1		1	UDL	USBFO	21.02	102.19	64.64	62.26	17.52		15.69				
		Sub-Loop Feeder - Per 4-Wire 56 Kbps Digital Grade Loop - Zone 2		2	UDL	USBFO	21.30	102.19	64.64	62.26	17.52		15.69				
		Sub-Loop Feeder - Per 4-Wire 56 Kbps Digital Grade Loop - Zone 3		3	UDL	USBFO	20.17	102.19	64.64	62.26	17.52		15.69				
		Order Coordination For Specified Time Conversion, per LSR			UDL	OCOSL		18.13									
		Sub-Loop Feeder - Per 4-Wire 64 Kbps Digital Grade Loop - Zone 1		1	UDL	USBFP	21.02	102.19	64.64	62.26	17.52		15.69				
		Sub-Loop Feeder - Per 4-Wire 64 Kbps Digital Grade Loop - Zone 2		2	UDL	USBFP	21.30	102.19	64.64	62.26	17.52		15.69				
		Sub-Loop Feeder - Per 4-Wire 64 Kbps Digital Grade Loop - Zone 3		3	UDL	USBFP	20.17	102.19	64.64	62.26	17.52		15.69				
		Order Coordination For Specified Conversion Time, per LSR			UDL	OCOSL		18.13									
SUB-LOOPS																	
	Sub-Loop Feeder																
		Sub Loop Feeder - DS3 - Per Mile Per Month	I		UE3	1L5SL	20.44										
		Sub Loop Feeder - DS3 - Facility Termination Per Month	I		UE3	USBF1	348.12	3,408.62	407.90	160.83	91.17		15.69				
		Sub Loop Feeder – STS-1 – Per Mile Per Month	I		UDLSX	1L5SL	20.44										
		Sub Loop Feeder - STS-1 - Facility Termination Per Month	I		UDLSX	USBF7	369.07	3,408.62	407.90	160.83	91.17		15.69				
UNBUNDLED LOOP CONCENTRATION																	
		Unbundled Loop Concentration - System A (TR008)			ULC	UCT8A	318.73	326.13	326.13				15.69				
		Unbundled Loop Concentration - System B (TR008)			ULC	UCT8B	46.69	135.89	135.89				15.69				
		Unbundled Loop Concentration - System A (TR303)			ULC	UCT3A	351.78	326.13	326.13				15.69				
		Unbundled Loop Concentration - System B (TR303)			ULC	UCT3B	78.67	135.89	135.89				15.69				

UNBUNDLED NETWORK ELEMENTS - South Carolina														Attachment: 2		Exhibit: B	
CATEGORY		RATE ELEMENTS	Interim	Zone	BCS	USOC	RATES ($)					Svc Order Submitted Elec per LSR	Svc Order Submitted Manually per LSR	Incremental Charge - Manual Svc Order vs. Electronic-1st	Incremental Charge - Manual Svc Order vs. Electronic-Add'l	Incremental Charge - Manual Svc Order vs. Electronic-Disc 1st	Incremental Charge - Manual Svc Order vs. Electronic-Disc Add'l
							Rec	Nonrecurring		Nonrecurring Disconnect		OSS Rates($)					
								First	Add'l	First	Add'l	SOMEC	SOMAN	SOMAN	SOMAN	SOMAN	SOMAN
		Unbundled Loop Concentration - DS1 Loop Interface Card			ULC	UCTCO	4.42	63.43	46.18	16.83	4.71		15.69				
		Unbundled Loop Concentration - ISDN Loop Interface (Brite Card)			UDN	ULCC1	7.02	10.56	10.50	5.41	5.37		15.69				
		Unbundled Loop Concentration - UDC Loop Interface (Brite Card)			UDC	ULCCU	7.02	10.56	10.50	5.41	5.37		15.69				
		Unbundled Loop Concentration - -2 Wire Voice-Loop Start or Ground Start Loop Interface (POTS Card)			UEA	ULCC2	1.75	10.56	10.50	5.41	5.37		15.69				
		Unbundled Loop Concentration - 2 Wire Voice - Reverse Battery Loop Interface (SPOTS Card)			UEA	ULCCR	10.42	10.56	10.50	5.41	5.37		15.69				
		Unbundled Loop Concentration - 4 Wire Voice Loop Interface (Specials Card)			UEA	ULCC4	6.22	10.56	10.50	5.41	5.37		15.69				
		Unbundled Loop Concentration - TEST CIRCUIT Card			ULC	UCTTC	30.38	10.56	10.50	5.41	5.37		15.69				
		Unbundled Loop Concentration - Digital 19.2 Kbps Data Loop Interface			UDL	ULCC7	9.21	10.56	10.50	5.41	5.37		15.69				
		Unbundled Loop Concentration - Digital 56 Kbps Data Loop Interface			UDL	ULCC5	9.21	10.56	10.50	5.41	5.37		15.69				
		Unbundled Loop Concentration - Digital 64 Kbps Data Loop Interface			UDL	ULCC6	9.21	10.56	10.50	5.41	5.37		15.69				
UNE OTHER, PROVISIONING ONLY - NO RATE																	
		NID - Dispatch and Service Order for NID installation			UENTW	UNDBX	0.00	0.00									
		UNTW Circuit Id Establishment, Provisioning Only - No Rate			UENTW	UENCE	0.00	0.00									
		Unbundled Contract Name, Provisioning Only - No Rate			UEANL,UEF,UEQ,UENTW	UNECN	0.00	0.00									
UNE OTHER, PROVISIONING ONLY - NO RATE																	
		Unbundled Contact Name, Provisioning Only - no rate			UAL,UCL,UDC,UDL,UDN,UEA,UHL,ULC	UNECN	0.00	0.00									
		Unbundled Sub-Loop Feeder-2 Wire Cross Box Jumper - no rate			UEA,UDN,UCL,UDC	USBFQ	0.00	0.00									
		Unbundled Sub-Loop Feeder-4 Wire Cross Box Jumper - no rate			UEA,USL,UCL,UDL	USBFR	0.00	0.00									
		Unbundled DS1 Loop - Superframe Format Option - no rate			USL	CCOSF	0.00	0.00									
		Unbundled DS1 Loop - Expanded Superframe Format option - no rate			USL	CCOEF	0.00	0.00									
HIGH CAPACITY UNBUNDLED LOCAL LOOP																	
	NOTE: minimum billing period of three months for DS3/STS-1 Local Loop																
		High Capacity Unbundled Local Loop - DS3 - Per Mile per month			UE3	1L5ND	12.26										
		High Capacity Unbundled Local Loop - DS3 - Facility Termination per month			UE3	UE3PX	306.36	452.52	264.53	119.75	83.77		15.69				
		High Capacity Unbundled Local Loop - STS-1 - Per Mile per month			UDLSX	1L5ND	12.26										
		High Capacity Unbundled Local Loop - STS-1 - Facility Termination per month			UDLSX	UDLS1	313.49	452.52	264.53	119.75	83.77		15.69				
LOOP MAKE-UP																	
		Loop Makeup - Preordering Without Reservation, per working or spare facility queried (Manual).			UMK	UMKLW		24.04	24.04								
		Loop Makeup - Preordering With Reservation, per spare facility queried (Manual).			UMK	UMKLP		25.49	25.49								
HIGH FREQUENCY SPECTRUM																	
	LINE SHARING																
	SPLITTERS-CENTRAL OFFICE BASED																
		Line Sharing Splitter, per System 96 Line Capacity			ULS	ULSDA	216.22	189.21	0.00	178.38	0.00		15.69				
		Line Sharing Splitter, per System 24 Line Capacity			ULS	ULSDB	54.05	189.21	0.00	178.38	0.00		15.69				
		Line Sharing Splitter, Per System, 8 Line Capacity	I		ULS	ULSD8	18.02	189.21	0.00	178.38	0.00		15.69				
		Line Sharing-DLEC Owned Splitter in CO-CFA activaton-deactivation (per LSOD)			ULS	ULSDG		86.67	0.00	49.95	0.00		15.69				
	END USER ORDERING-CENTRAL OFFICE BASED-HIGH FREQUENCY SPECTRUM AKA LINE SHARING																
		Line Sharing - per Line Activation (BST owned Splitter)			ULS	ULSDC	0.61	18.55	10.62	10.04	4.93		15.69				

UNBUNDLED NETWORK ELEMENTS - South Carolina														Attachment: 2		Exhibit: B	
CATEGORY		RATE ELEMENTS	Interim	Zone	BCS	USOC	RATES ($)					Svc Order Submitted Elec per LSR	Svc Order Submitted Manually per LSR	Incremental Charge - Manual Svc Order vs. Electronic-1st	Incremental Charge - Manual Svc Order vs. Electronic-Add'l	Incremental Charge - Manual Svc Order vs. Electronic-Disc 1st	Incremental Charge - Manual Svc Order vs. Electronic-Disc Add'l
							Rec	Nonrecurring		Nonrecurring Disconnect		OSS Rates($)					
								First	Add'l	First	Add'l	SOMEC	SOMAN	SOMAN	SOMAN	SOMAN	SOMAN
		Line Sharing - per Subsequent Activity per Line Rearrangement(BST Owned Splitter)			ULS	ULSDS		16.42	8.21				15.69				
		Line Sharing - per Subsequent Activity per Line Rearrangement(DLEC Owned Splitter)			ULS	ULSCS		16.42	8.21				15.69				
		Line Sharing - per Line Activation (DLEC owned Splitter)	I		ULS	ULSCC	0.61	47.44	19.31	20.67	12.74		15.69				
	LINE SPLITTING																
	END USER ORDERING-CENTRAL OFFICE BASED																
		Line Splitting - per line activation DLEC owned splitter	I		UEPSR UEPSB	UREOS	0.61										
		Line Splitting - per line activation BST owned - physical	I		UEPSR UEPSB	UREBP	0.61	37.09	21.24	20.07	9.85		15.69				
		Line Splitting - per line activation BST owned - virtual	I		UEPSR UEPSB	UREBV	0.61	37.09	21.24	20.07	9.85		15.69				
	REMOTE SITE HIGH FREQUENCY SPECTRUM																
	SPLITTERS-REMOTE SITE																
		Remote Site Line Share BellSouth Owned Splitter, 24 Port	I		ULS	ULSRB	38.61	115.04	0.00	85.18	0.00		15.69				
		Remote Site Line Share Cable Pair Activation CLEC Owned at RS and Deactivation	I		ULS	ULSTG		95.83	0.00	68.37	0.00		15.69				
	END USER ORDERING-REMOTE SITE HIGH FREQUENCY SPECTRUM AKA REMOTE SITE LINE SHARING																
		Remote Site Line Share Line Activationfor End User Served at RS, BST Splitter	I		ULS	ULSRC	0.61	37.09	21.24	20.07	9.85		15.69				
		RS Line Share Line Activation for End User served at RS, CLEC Splitter	I		ULS	ULSTC	0.61	37.09	21.24	20.07	9.85		15.69				
		Remote Site Line Share Subsequent Activity-RS BST Owned Splitter	I		ULS	ULSRS		49.26	17.87				15.69				
		Remote Site Line Share Subsequent Activity-RS CLEC Owned Splitter	I		ULS	ULSTS		49.26	17.87				15.69				
UNBUNDLED DEDICATED TRANSPORT																	
	NOTE: INTEROFFICE CHANNEL DEDICATED TRANSPORT - minimum billing period - below DS3=one month, DS3/STS-1=four months																
	INTEROFFICE CHANNEL - DEDICATED TRANSPORT																
		Interoffice Channel - Dedicated Transport - 2-Wire Voice Grade - Per Mile per month			U1TVX	1L5XX	0.0167										
		Interoffice Channel - Dedicated Transport- 2- Wire Voice Grade - Facility Termination			U1TVX	U1TV2	24.30	40.63	27.47	16.77	6.91		15.69				
		Interoffice Channel - Dedicated Transpor t- 2-Wire Voice Grade Rev Bat. - Per Mile per month			U1TVX	1L5XX	0.0167										
		Interoffice Channel - Dedicated Transport- 2- Wire VG Rev Bat. - Facility Termination			U1TVX	U1TR2	24.30	40.63	27.47	16.77	6.91		15.69				
		Interoffice Channel - Dedicated Transport - 4-Wire Voice Grade - Per Mile per month			U1TVX	1L5XX	0.0167										
		Interoffice Channel - Dedicated Transport - 4- Wire Voice Grade - Facility Termination			U1TVX	U1TV4	21.29	40.63	27.47	16.77	6.91		15.69				
		Interoffice Channel - Dedicated Transport - 56 kbps - per mile per month			U1TDX	1L5XX	0.0167										
		Interoffice Channel - Dedicated Transport - 56 kbps - Facility Termination			U1TDX	U1TD5	16.76	40.63	27.47	16.77	6.91		15.69				
		Interoffice Channel - Dedicated Transport - 64 kbps - per mile per month			U1TDX	1L5XX	0.0167										
		Interoffice Channel - Dedicated Transport - 64 kbps - Facility Termination			U1TDX	U1TD6	16.76	40.63	27.47	16.77	6.91		15.69				
		Interoffice Channel - Dedicated Channel - DS1 - Per Mile per month			U1TD1	1L5XX	0.3415										
		Interoffice Channel - Dedicated Tranport - DS1 - Facility Termination			U1TD1	U1TF1	77.14	89.47	81.99	16.39	14.48		15.69				
		Interoffice Channel - Dedicated Transport - DS3 - Per Mile per month			U1TD3	1L5XX	8.02										
		Interoffice Channel - Dedicated Transport - DS3 - Facility Termination per month			U1TD3	U1TF3	880.65	279.37	163.12	60.33	58.59		15.69				
		Interoffice Channel - Dedicated Transport - STS-1 - Per Mile per month			U1TS1	1L5XX	8.02										
		Interoffice Channel - Dedicated Transport - STS-1 - Facility Termination			U1TS1	U1TFS	880.55	279.37	163.12	60.33	58.59		15.69				

UNBUNDLED NETWORK ELEMENTS - South Carolina														Attachment: 2		Exhibit: B	
CATEGORY		RATE ELEMENTS	Interim	Zone	BCS	USOC	RATES ($)					Svc Order Submitted Elec per LSR	Svc Order Submitted Manually per LSR	Incremental Charge - Manual Svc Order vs. Electronic-1st	Incremental Charge - Manual Svc Order vs. Electronic-Add'l	Incremental Charge - Manual Svc Order vs. Electronic-Disc 1st	Incremental Charge - Manual Svc Order vs. Electronic-Disc Add'l
							Rec	Nonrecurring		Nonrecurring Disconnect		OSS Rates($)					
								First	Add'l	First	Add'l	SOMEC	SOMAN	SOMAN	SOMAN	SOMAN	SOMAN
	LOCAL CHANNEL - DEDICATED TRANSPORT																
	NOTE: LOCAL CHANNEL DEDICATED TRANSPORT - minimum billing period = below DS3=one month, DS3/STS-1=four months																
		Local Channel - Dedicated - 2-Wire Voice Grade			ULDVX	ULDV2	15.33	193.53	33.24	36.72	3.21		15.69				
		Local Channel - Dedicated - 2-Wire Voice Grade Rev Bat			ULDVX	ULDR2	15.33	193.53	33.24	36.72	3.21		15.69				
		Local Channel - Dedicated - 4-Wire Voice Grade			ULDVX	ULDV4	16.54	193.97	33.68	37.19	3.68		15.69				
		Local Channel - Dedicated - DS1 - Zone 1		1	ULDD1	ULDF1	42.62	177.87	154.06	22.24	15.30		15.69				
		Local Channel - Dedicated - DS1 - Zone 2		2	ULDD1	ULDF1	70.32	177.87	154.06	22.24	15.30		15.69				
		Local Channel - Dedicated - DS1 - Zone 3		3	ULDD1	ULDF1	190.68	177.87	154.06	22.24	15.30		15.69				
		Local Channel - Dedicated - DS3 - Per Mile per month			ULDD3	1L5NC	11.93										
		Local Channel - Dedicated - DS3 - Facility Termination			ULDD3	ULDF3	446.00	452.52	264.53	119.75	83.77		15.69				
		Local Channel - Dedicated - STS-1- Per Mile per month			ULDS1	1L5NC	11.93										
		Local Channel - Dedicated - STS-1 - Facility Termination			ULDS1	ULDFS	435.10	452.52	264.53	119.75	83.77		15.69				
DARK FIBER																	
		Dark Fiber, Four Fiber Strands, Per Route Mile or Fraction Thereof per month - Local Channel			UDF	1L5DC	97.65										
		NRC Dark Fiber - Local Channel			UDF	UDFC4		640.51	138.17	317.76	198.11		15.69				
		Dark Fiber, Four Fiber Strands, Per Route Mile or Fraction Thereof per month - Interoffice Channel			UDF	1L5DF	36.41										
		NRC Dark Fiber - Interoffice Channel			UDF	UDF14		640.51	138.17	317.76	198.11		15.69				
		Dark Fiber, Four Fiber Strands, Per Route Mile or Fraction Thereof per month - Local Loop			UDF	1L5DL	97.65										
		NRC Dark Fiber - Local Loop			UDF	UDFL4		640.51	138.17	317.76	198.11		15.69				
8XX ACCESS TEN DIGIT SCREENING																	
		8XX Access Ten Digit Screening, Per Call			OHD		0.0006673										
		8XX Access Ten Digit Screening, Reservation Charge Per 8XX Number Reserved			OHD	N8R1X		2.59	0.44				15.69				
		8XX Access Ten Digit Screening, Per 8XX No. Established W/O POTS Translations			OHD			5.95	0.81	4.58	0.54		15.69				
		8XX Access Ten Digit Screening, Per 8XX No. Established With POTS Translations			OHD	N8FTX		5.95	0.81	4.58	0.54		15.69				
		8XX Access Ten Digit Screening, Customized Area of Service Per 8XX Number			OHD	N8FCX		2.59	1.30				15.69				
		8XX Access Ten Digit Screening, Multiple InterLATA CXR Routing Per CXR Requested Per 8XX No.			OHD	N8FMX		3.03	1.74				15.69				
		8XX Access Ten Digit Screening, Change Charge Per Request			OHD	N8FAX		3.03	0.44				15.69				
		8XX Access Ten Digit Screening, Call Handling and Destination Features			OHD	N8FDX		2.59	2.59				15.69				
		8XX Access Ten Digit Screening, w/ 8XX No. Delivery			OHD		0.0006673										
		8XX Access Ten Digit Screening, w/ POTS No. Delivery			OHD		0.0006673										
LINE INFORMATION DATA BASE ACCESS (LIDB)																	
		LIDB Common Transport Per Query			OQT		0.0000246										
		LIDB Validation Per Query			OQU		0.0138158										
		LIDB Originating Point Code Establishment or Change			OQT, OQU	NRPBX		34.40		42.18			15.69				
SIGNALING (CCS7)																	
		CCS7 Signaling Connection, Per 56 Kbps Facility			UDB	TPP++	16.93	35.61	35.61	16.48	16.48						
		CCS7 Signaling Termination, Per STP Port			UDB	PT8SX	163.49										
		CCS7 Signaling Usage, Per TCAP Message			UDB		0.0000692										
		CCS7 Signaling Connection, Per link (A link)			UDB	TPP++	16.93	35.61	35.61	16.48	16.48		15.69				
		CCS7 Signaling Connection, Per link (B link) (also known as D link)			UDB	TPP++	16.93	35.61	35.61	16.48	16.48		15.69				
		CCS7 Signaling Usage, Per ISUP Message			UDB		0.0000173										
		CCS7 Signaling Usage Surrogate, per link per LATA			UDB	STU56	791.37										
		CCS7 Signaling Point Code, per Originating Point Code Establishment or Change, per STP affected			UDB	CCAPO		29.08	29.08	35.65	35.65		15.69				
		CCS7 Signaling Point Code, per Destination Point Code Establishment or Change, Per Stp Affected			UDB	CCAPD		29.08	29.08	35.65	35.65		15.69				
E911 SERVICE																	
		Local Channel - Dedicated - 2-wr Voice Grade					15.33	193.53	33.24	36.72	3.21		15.69				
		Interoffice Transport - Dedicated - 2-wr Voice Grade Per Mile					0.0167										

UNBUNDLED NETWORK ELEMENTS - South Carolina														Attachment: 2		Exhibit: B	
CATEGORY		RATE ELEMENTS	Interim	Zone	BCS	USOC	RATES ($)					Svc Order Submitted Elec per LSR	Svc Order Submitted Manually per LSR	Incremental Charge - Manual Svc Order vs. Electronic-1st	Incremental Charge - Manual Svc Order vs. Electronic-Add'l	Incremental Charge - Manual Svc Order vs. Electronic-Disc 1st	Incremental Charge - Manual Svc Order vs. Electronic-Disc Add'l
							Rec	Nonrecurring		Nonrecurring Disconnect				OSS Rates($)			
								First	Add'l	First	Add'l	SOMEC	SOMAN	SOMAN	SOMAN	SOMAN	SOMAN
		Interoffice Transport - Dedicated - 2-wr Voice Grade Per Facility Termination					24.30	40.63	27.47	16.77	6.91		15.69				
		Local Channel - Dedicated - DS1 - Zone 1					42.62	177.87	154.06	22.24	15.30		15.69				
		Local Channel - Dedicated - DS1 - Zone 2					70.32	177.87	154.06	22.24	15.30		15.69				
		Local Channel - Dedicated - DS1 - Zone 3					190.68	177.87	154.06	22.24	15.30		15.69				
		Interoffice Transport - Dedicated - DS1 Per Mile					0.3415										
		Interoffice Transport - Dedicated - DS1 Per Facility Termination					77.14	89.47	81.99	16.39	14.48		15.69				
CALLING NAME (CNAM) SERVICE																	
		CNAM For DB Owners - Service Establishment			OQV			23.00	23.00	21.15	21.15		15.69				
		CNAM For Non DB Owners - Service Establishment			OQV			23.00	23.00	21.15	21.15		15.69				
		CNAM For DB Owners - Service Provisioning With Point Code Establishment			OQV			993.09	734.47	269.53	198.18		15.69				
		CNAM For Non DB Owners - Service Provisioning With Point Code Establishment			OQV			343.09	245.69	275.87	198.18		15.69				
		CNAM for DB Owners, Per Query			OQV		0.0010433										
		CNAM for Non DB Owners, Per Query			OQV		0.0010433										
LNP Query Service																	
		LNP Charge Per query					0.0008837										
		LNP Service Establishment Manual						25.09	25.09	23.07	23.07		15.69				
		LNP Service Provisioning with Point Code Establishment						594.82	303.88	269.53	198.18		15.69				
OPERATOR CALL PROCESSING																	
		Oper. Call Processing - Oper. Provided, Per Min. - Using BST LIDB					1.20										
		Oper. Call Processing - Oper. Provided, Per Min. - Using Foreign LIDB					1.24										
		Oper. Call Processing - Fully Automated, per Call - Using BST LIDB					0.20										
		Oper. Call Processing - Fully Automated, per Call - Using Foreign LIDB					0.20										
INWARD OPERATOR SERVICES																	
		Inward Operator Services - Verification, Per Minute					1.15										
		Inward Operator Services - Verification and Emergency Interrupt - Per Minute					1.15										
BRANDING - OPERATOR CALL PROCESSING																	
	Facility based CLEC																
		Recording of Custom Branded OA Announcement				CBAOS		7,000.00	7,000.00				15.69				
		Loading of Custom Branded OA Announcement per shelf/NAV per OCN				CBAOL		500.00	500.00				15.69				
	UNEP CLEC																
		Recording of Custom Branded OA Announcement						7,000.00	7,000.00				15.69				
		Loading of Custom Branded OA Announcement per shelf/NAV per OCN						500.00	500.00				15.69				
	Unbranding via OLNS for UNEP CLEC																
		Loading of OA per OCN (Regional)						1,200.00	1,200.00				15.69				
DIRECTORY ASSISTANCE SERVICES																	
	DIRECTORY ASSISTANCE ACCESS SERVICE																
		Directory Assistance Access Service Calls, Charge Per Call					0.275										
	DIRECTORY ASSISTANCE CALL COMPLETION ACCESS SERVICE (DACC)																
		Directory Assistance Call Completion Access Service (DACC), Per Call Attempt					0.10										
DIRECTORY ASSISTANCE SERVICES																	
	DIRECTORY ASSISTANCE DATA BASE SERVICE (DADS)																
		Directory Assistance Data Base Service Charge Per Listing					0.04										
		Directory Assistance Data Base Service, per month				DBSOF	150.00										
BRANDING - DIRECTORY ASSISTANCE																	
	Facility Based CLEC																
		Recording and Provisioning of DA Custom Branded Announcement			AMT	CBADA		3,000.00	3,000.00				15.69				

UNBUNDLED NETWORK ELEMENTS - South Carolina														Attachment: 2		Exhibit: B	
CATEGORY		RATE ELEMENTS	Interim	Zone	BCS	USOC	RATES ($)					Svc Order Submitted Elec per LSR	Svc Order Submitted Manually per LSR	Incremental Charge - Manual Svc Order vs. Electronic-1st	Incremental Charge - Manual Svc Order vs. Electronic-Add'l	Incremental Charge - Manual Svc Order vs. Electronic-Disc 1st	Incremental Charge - Manual Svc Order vs. Electronic-Disc Add'l
							Rec	Nonrecurring		Nonrecurring Disconnect				OSS Rates($)			
								First	Add'l	First	Add'l	SOMEC	SOMAN	SOMAN	SOMAN	SOMAN	SOMAN
		Loading of Custom Branded Announcement per Switch per OCN			AMT	CBADC		1,170.00	1,170.00				15.69				
	UNEP CLEC																
		Recording of DA Custom Branded Announcement						3,000.00	3,000.00				15.69				
		Loading of DA Custom Branded Announcement per Switch per OCN						1,170.00	1,170.00				15.69				
	Unbranding via OLNS for UNEP CLEC																
		Loading of DA per OCN (1 OCN per Order)						420.00	420.00				15.69				
		Loading of DA per Switch per OCN						16.00	16.00				15.69				
SELECTIVE ROUTING																	
		Selective Routing Per Unique Line Class Code Per Request Per Switch				USRCR		84.89	84.89	14.14	14.14		15.69				
VIRTUAL COLLOCATION																	
		Virtual Collocation-2 Wire Cross Connects (Loop) for Line Splitting			UEPSR, UEPSB	VE1LS	0.0317	12.32	11.83	6.04	5.45		15.69				
PHYSICAL COLLOCATION																	
		Physical Collocation-2 Wire Cross Connects (Loop) for Line Splitting			UEPSR, UEPSB	PE1LS	0.0341	12.32	11.83	6.04	5.45		15.69				
AIN SELECTIVE CARRIER ROUTING																	
		Regional Service Establishment			SRC	SRCEC		101,324.34	101,324.34	8,609.85	8,609.85		15.69				
		End Office Establishment			SRC	SRCEO		175.66	175.66	1.70	1.70		15.69				
		Query NRC, per query			SRC		0.0035036										
AIN - BELLSOUTH AIN SMS ACCESS SERVICE																	
		AIN SMS Access Service - Service Establishment, Per State, Initial Setup			A1N	CAMSE		39.53	39.53	40.78	40.78		15.69				
		AIN SMS Access Service - Port Connection - Dial/Shared Access			A1N	CAMDP		7.85	7.85	9.11	9.11		15.69				
		AIN SMS Access Service - Port Connection - ISDN Access			A1N	CAM1P		7.85	7.85	9.11	9.11		15.69				
		AIN SMS Access Service - User Identification Codes - Per User ID Code			A1N	CAMAU		35.08	35.08	27.12	27.12		15.69				
		AIN SMS Access Service - Security Card, Per User ID Code, Initial or Replacement			A1N	CAMRC		41.98	41.98	11.74	11.74		15.69				
		AIN SMS Access Service - Storage, Per Unit (100 Kilobytes)					0.0027										
		AIN SMS Access Service - Session, Per Minute					0.7121										
		AIN SMS Access Service - Company Performed Session, Per Minute					0.8364										
AIN - BELLSOUTH AIN TOOLKIT SERVICE																	
		AIN Toolkit Service - Service Establishment Charge, Per State, Initial Setup			CAM	BAPSC		39.53	39.53	40.78	40.78		15.69				
		AIN Toolkit Service - Training Session, Per Customer				BAPVX		4,211.54	4,211.54	0.00	0.00		15.69				
		AIN Toolkit Service - Trigger Access Charge, Per Trigger, Per DN, Term. Attempt				BAPTT		7.85	7.85	9.11	9.11		15.69				
		AIN Toolkit Service - Trigger Access Charge, Per Trigger, Per DN, Off-Hook Delay				BAPTD		7.85	7.85	9.11	9.11		15.69				
		AIN Toolkit Service - Trigger Access Charge, Per Trigger, Per DN, Off-Hook Immediate				BAPTM		7.85	7.85	9.11	9.11		15.69				
		AIN Toolkit Service - Trigger Access Charge, Per Trigger, Per DN, 10-Digit PODP				BAPTO		34.54	34.54	14.39	14.39		15.69				
		AIN Toolkit Service - Trigger Access Charge, Per Trigger, Per DN, CDP				BAPTC		34.54	34.54	14.39	14.39		15.69				
		AIN Toolkit Service - Trigger Access Charge, Per Trigger, Per DN, Feature Code				BAPTF		34.54	34.54	14.39	14.39		15.69				
		AIN Toolkit Service - Query Charge, Per Query					0.0558238										
		AIN Toolkit Service - Type 1 Node Charge, Per AIN Toolkit Subscription, Per Node, Per Query					0.0069214										
		AIN Toolkit Service - SCP Storage Charge, Per SMS Access Account, Per 100 Kilobytes					0.07										
		AIN Toolkit Service - Monthly report - Per AIN Toolkit Service Subscription			CAM	BAPMS	11.87	7.85	7.85	5.52	5.52		15.69				

CATEGORY	RATE ELEMENTS	Interim	Zone	BCS	USOC	RATES ($)					Svc Order Submitted Elec per LSR	Svc Order Submitted Manually per LSR	Attachment: 2 Incremental Charge - Manual Svc Order vs. Electronic-1st	Attachment: 2 Incremental Charge - Manual Svc Order vs. Electronic-Add'l	Exhibit: B Incremental Charge - Manual Svc Order vs. Electronic-Disc 1st	Exhibit: B Incremental Charge - Manual Svc Order vs. Electronic-Disc Add'l
						Rec	Nonrecurring		Nonrecurring Disconnect				OSS Rates($)			
							First	Add'l	First	Add'l	SOMEC	SOMAN	SOMAN	SOMAN	SOMAN	SOMAN
	AIN Toolkit Service - Special Study - Per AIN Toolkit Service Subscription			CAM	BAPLS	3.51	8.68	8.68				15.69				
	AIN Toolkit Service - Call Event Report - Per AIN Toolkit Service Subscription			CAM	BAPDS	8.48	7.85	7.85	5.52	5.52		15.69				
	AIN Toolkit Service - Call Event Special Study - Per AIN Toolkit Service Subscription			CAM	BAPES	0.12	8.68	8.68				15.69				
ENHANCED EXTENDED LINK (EELs)																
	NOTE: The monthly recurring and non-recurring charges below will apply and the Switch-As-Is Charge will not apply for EELs provisioned as ' Ordinarily Combined' Network Elements.															
	NOTE: The monthly recurring and the Switch-As-Is Charge and not the non-recurring charges below will apply for EELs provisioned as ' Currently Combined' Network Elements.															
	NOTE: Minimum billing is one month for DS1 and below and three months above DS1 services.															
	2-WIRE VOICE GRADE EXTENDED LOOP WITH DEDICATED DS1 INTEROFFICE TRANSPORT (EEL)															
	First 2-Wire VG Loop(SL2) in a DS1 Interofficed Transport Combination - Zone 1		1	UNCVX	UEAL2	16.68	105.98	68.43	53.05	10.61		15.69				
	First 2-Wire VG Grade Loop(SL2) in a DS1 Interofficed Transport Combination - Zone 2		2	UNCVX	UEAL2	23.13	105.98	68.43	53.05	10.61		15.69				
	First 2-Wire VG Grade Loop(SL2) in a DS1 Interofficed Transport Combination - Zone 3		3	UNCVX	UEAL2	28.46	105.98	68.43	53.05	10.61		15.69				
	Interoffice Transport - Dedicated - DS1 combination - Per Mile per month			UNC1X	1L5XX	0.27										
	Interoffice Transport - Dedicated - DS1 combination - Facility Termination per month			UNC1X	U1TF1	61.71	89.47	81.99	16.39	14.48		15.69				
	DS1 Channelization System Per Month			UNC1X	MQ1	107.57	91.24	62.71	10.56	9.81		15.69				
	Voice Grade COCI - DS1 To Ds0 Interface - Per Month			UNCVX	1D1VG	0.56	6.59	4.73				15.69				
	Each Additional 2-Wire VG Loop(SL 2) in the same DS1 Interoffice Transport Combination - Zone 1		1	UNCVX	UEAL2	16.68	105.98	68.43	53.05	10.61		15.69				
	Each Additional 2-Wire VG Loop(SL2) in the same DS1 Interoffice Transport Combination - Zone 2		2	UNCVX	UEAL2	23.13	105.98	68.43	53.05	10.61		15.69				
	Each Additional 2-Wire VG Loop(SL2) in the same DS1 Interoffice Transport Combination - Zone 3		3	UNCVX	UEAL2	28.46	105.98	68.43	53.05	10.61		15.69				
	Voice Grade COCI - DS1 to DS0 Channel System combination - per month			UNCVX	1D1VG	0.56	6.59	4.73				15.69				
	Nonrecurring Currently Combined Network Elements Switch -As-Is Charge			UNC1X	UNCCC		5.61	5.61	7.00	7.00		15.69				
	4-WIRE VOICE GRADE EXTENDED LOOP WITH DEDICATED DS1 INTEROFFICE TRANSPORT (EEL)															
	First 4-Wire Analog Voice Grade Loop in a DS1 Interoffice Transport Combination - Zone 1		1	UNCVX	UEAL4	32.59	132.38	94.83	59.35	14.61		15.69				
	First 4-Wire Analog Voice Grade Loop in a DS1 Interoffice Transport Combination - Zone 2		2	UNCVX	UEAL4	43.89	132.38	94.83	59.35	14.61		15.69				
	First 4-Wire Analog Voice Grade Loop in a DS1 Interoffice Transport Combination - Zone 3		3	UNCVX	UEAL4	43.38	132.38	94.83	59.35	14.61		15.69				
	Interoffice Transport - Dedicated - DS1 combination - Per Mile Per Month			UNC1X	1L5XX	0.27										
	Interoffice Transport - Dedicated - DS1 - Facility Termination Per Month			UNC1X	U1TF1	61.71	89.47	81.99	16.39	14.48		15.69				
	Channelization - Channel System DS1 to DS0 combination Per Month			UNC1X	MQ1	107.57	91.24	62.71	10.56	9.81		15.69				
	Voice Grade COCI - DS1 to DS0 Channel System combination - per month			UNCVX	1D1VG	0.56	6.59	4.73				15.69				
	Additional 4-Wire Analog Voice Grade Loop in same DS1 Interoffice Transport Combination - Zone 1		1	UNCVX	UEAL4	32.59	132.38	94.83	59.35	14.61		15.69				
	Additional 4-Wire Analog Voice Grade Loop in same DS1 Interoffice Transport Combination - Zone 2		2	UNCVX	UEAL4	43.89	132.38	94.83	59.35	14.61		15.69				
	Additional 4-Wire Analog Voice Grade Loop in same DS1 Interoffice Transport Combination - Zone 3		3	UNCVX	UEAL4	43.38	132.38	94.83	59.35	14.61		15.69				
	Voice Grade COCI - DS1 to DS0 Channel System combination - per month			UNCVX	1D1VG	0.56	6.59	4.73				15.69				
	Nonrecurring Currently Combined Network Elements Switch -As-Is Charge			UNC1X	UNCCC		5.61	5.61	7.00	7.00		15.69				
	4-WIRE 56 KBPS EXTENDED DIGITAL LOOP WITH DEDICATED DS1 INTEROFFICE TRANSPORT (EEL)															

CATEGORY		RATE ELEMENTS	Interim	Zone	BCS	USOC	RATES ($)					Svc Order Submitted Elec per LSR	Svc Order Submitted Manually per LSR	Attachment: 2 Incremental Charge - Manual Svc Order vs. Electronic-1st	Attachment: 2 Incremental Charge - Manual Svc Order vs. Electronic-Add'l	Exhibit: B Incremental Charge - Manual Svc Order vs. Electronic-Disc 1st	Exhibit: B Incremental Charge - Manual Svc Order vs. Electronic-Disc Add'l
							Rec	Nonrecurring		Nonrecurring Disconnect		OSS Rates($)					
								First	Add'l	First	Add'l	SOMEC	SOMAN	SOMAN	SOMAN	SOMAN	SOMAN
		First 4-Wire 56Kbps Digital Grade Loop in a DS1 Interoffice Transport Combination - Zone 1		1	UNCDX	UDL56	29.93	126.66	89.12	59.35	14.61		15.69				
		First 4-wire 56Kbps Digital Grade Loop in a DS1 Interoffice Transport Combination - Zone 2		2	UNCDX	UDL56	33.99	126.66	89.12	59.35	14.61		15.69				
		First 4-Wire 56Kbps Digital Grade Loop in a DS1 Interoffice Transport Combination - Zone 3		3	UNCDX	UDL56	34.74	126.66	89.12	59.35	14.61		15.69				
		Interoffice Transport - Dedicated - DS1 combination - Per Mile Per Month			UNC1X	1L5XX	0.27										
		Interoffice Transport - Dedicated - DS1 - combination Facility Termination Per Month			UNC1X	U1TF1	61.71	89.47	81.99	16.39	14.48		15.69				
		Channelization - Channel System DS1 to DS0 combination Per Month			UNC1X	MQ1	107.57	91.24	62.71	10.56	9.81		15.69				
		OCU-DP COCI (data) - DS1 to DS0 Channel System - per month (2.4-64kbs)			UNCDX	1D1DD	1.19	6.59	4.73				15.69				
		Additional 4-Wire 56Kbps Digital Grade Loopin same DS1 Interoffice Transport Combination - Zone 1		1	UNCDX	UDL56	29.93	126.66	89.12	59.35	14.61		15.69				
		Additional 4-Wire 56Kbps Digital Grade Loopin same DS1 Interoffice Transport Combination - Zone 2		2	UNCDX	UDL56	33.99	126.66	89.12	59.35	14.61		15.69				
		Additional 4-Wire 56Kbps Digital Grade Loopin same DS1 Interoffice Transport Combination - Zone 3		3	UNCDX	UDL56	34.74	126.66	89.12	59.35	14.61		15.69				
		OCU-DP COCI (data) - DS1 to DS0 Channel System - combination per month (2.4-64kbs)			UNCDX	1D1DD	1.19	6.59	4.73				15.69				
		Nonrecurring Currently Combined Network Elements Switch -As-Is Charge			UNC1X	UNCCC		5.61	5.61	7.00	7.00		15.69				
	4-WIRE 64 KBPS EXTENDED DIGITAL LOOP WITH DEDICATED DS1 INTEROFFICE TRANSPORT (EEL)																
		First 4-Wire 64Kbps Digital Grade Loop in a DS1 Interoffice Transport Combination - Zone 1		1	UNCDX	UDL64	29.93	126.66	89.12	59.35	14.61		15.69				
		First 4-Wire 64Kbps Digital Grade Loop in a DS1 Interoffice Transport Combination - Zone 2		2	UNCDX	UDL64	33.99	126.66	89.12	59.35	14.61		15.69				
		First 4-Wire 64Kbps Digital Grade Loop in a DS1 Interoffice Transport Combination - Zone 3		3	UNCDX	UDL64	34.74	126.66	89.12	59.35	14.61		15.69				
		Interoffice Transport - Dedicated - DS1 combination - Per Mile Per Month			UNC1X	1L5XX	0.27										
		Interoffice Transport - Dedicated - DS1 combination - Facility Termination Per Month			UNC1X	U1TF1	61.71	89.47	81.99	16.39	14.48		15.69				
		Channelization - Channel System DS1 to DS0 combination Per Month			UNC1X	MQ1	107.57	91.24	62.71	10.56	9.81		15.69				
		OCU-DP COCI (data) - DS1 to DS0 Channel System combination - per month (2.4-64kbs)			UNCDX	1D1DD	1.19	6.59	4.73				15.69				
		Additional 4-Wire 64Kbps Digital Grade Loopin same DS1 Interoffice Transport Combination - Zone 1		1	UNCDX	UDL64	29.93	126.66	89.12	59.35	14.61		15.69				
		Additional 4-Wire 64Kbps Digital Grade Loopin same DS1 Interoffice Transport Combination - Zone 2		2	UNCDX	UDL64	33.99	126.66	89.12	59.35	14.61		15.69				
		Additional 4-Wire 64Kbps Digital Grade Loopin same DS1 Interoffice Transport Combination - Zone 3		3	UNCDX	UDL64	34.74	126.66	89.12	59.35	14.61		15.69				
		OCU-DP COCI (data) - DS1 to DS0 Channel System combination - per month (2.4-64kbs)			UNCDX	1D1DD	1.19	6.59	4.73				15.69				
		Nonrecurring Currently Combined Network Elements Switch -As-Is Charge			UNC1X	UNCCC		5.61	5.61	7.00	7.00		15.69				
	4-WIRE DS1 DIGITAL EXTENDED LOOP WITH DEDICATED DS1 INTEROFFICE TRANSPORT (EEL)																
		4-Wire DS1 Digital Loop in Combination with DS1 Interoffice Transport - Zone 1		1	UNC1X	USLXX	90.87	253.03	157.89	44.80	11.73		15.69				
		4-Wire DS1 Digital Loop in Combination with DS1 Interoffice Transport - Zone 2		2	UNC1X	USLXX	155.43	253.03	157.89	44.80	11.73		15.69				
		4-Wire DS1 Digital Loop in Combination with DS1 Interoffice Transport - Zone 3		3	UNC1X	USLXX	261.89	253.03	157.89	44.80	11.73		15.69				
		Interoffice Transport - Dedicated - DS1 combination - Per Mile Per Month			UNC1X	1L5XX	0.27										

CATEGORY	RATE ELEMENTS	Interim	Zone	BCS	USOC	RATES ($)					Svc Order Submitted Elec per LSR	Svc Order Submitted Manually per LSR	Attachment: 2		Exhibit: B	
													Incremental Charge - Manual Svc Order vs. Electronic-1st	Incremental Charge - Manual Svc Order vs. Electronic-Add'l	Incremental Charge - Manual Svc Order vs. Electronic-Disc 1st	Incremental Charge - Manual Svc Order vs. Electronic-Disc Add'l
						Rec	Nonrecurring		Nonrecurring Disconnect		OSS Rates($)					
							First	Add'l	First	Add'l	SOMEC	SOMAN	SOMAN	SOMAN	SOMAN	SOMAN
	Interoffice Transport - Dedicated - DS1 combination - Facility Termination Per Month			UNC1X	U1TF1	61.71	89.47	81.99	16.39	14.48		15.69				
	Nonrecurring Currently Combined Network Elements Switch -As-Is Charge			UNC1X	UNCCC		5.61	5.61	7.00	7.00		15.69				
	4-WIRE DS1 DIGITAL EXTENDED LOOP WITH DEDICATED DS3 INTEROFFICE TRANSPORT (EEL)															
	First DS1Loop in DS3 Interoffice Transport Combination - Zone 1		1	UNC1X	USLXX	90.87	253.03	157.89	44.80	11.73		15.69				
	First DS1Loop in DS3 Interoffice Transport Combination - Zone 2		2	UNC1X	USLXX	155.43	253.03	157.89	44.80	11.73		15.69				
	First DS1Loop in DS3 Interoffice Transport Combination - Zone 3		3	UNC1X	USLXX	261.89	253.03	157.89	44.80	11.73		15.69				
	Interoffice Transport - Dedicated - DS3 combination - Per Mile Per Month			UNC3X	1L5XX	6.42										
	Interoffice Transport - Dedicated - DS3 - Facility Termination per month			UNC3X	U1TF3	704.52	279.37	163.12	60.33	58.59		15.69				
	DS3 to DS1 Channel System combination per month			UNC3X	MQ3	144.02	178.54	94.18	33.33	31.90		15.69				
	DS3 Interface Unit (DS1 COCI) combination per month			UNC1X	UC1D1	8.64	6.59	4.73				15.69				
	Additional DS1Loop in DS3 Interoffice Transport Combination - Zone 1		1	UNC1X	USLXX	90.87	253.03	157.89	44.80	11.73		15.69				
	Additional DS1Loop in DS3 Interoffice Transport Combination - Zone 2		2	UNC1X	USLXX	155.43	253.03	157.89	44.80	11.73		15.69				
	Additional DS1Loop in DS3 Interoffice Transport Combination - Zone 3		3	UNC1X	USLXX	261.89	253.03	157.89	44.80	11.73		15.69				
	DS3 Interface Unit (DS1 COCI) combination per month			UNC1X	UC1D1	8.64	6.59	4.73				15.69				
	Nonrecurring Currently Combined Network Elements Switch -As-Is Charge			UNC3X	UNCCC		5.61	5.61	7.00	7.00		15.69				
	2-WIRE VOICE GRADE EXTENDED LOOP/ 2 WIRE VOICE GRADE INTEROFFICE TRANSPORT (EEL)															
	2-WireVG Loop used with 2-wire VG Interoffice Transport Combination - Zone 1		1	UNCVX	UEAL2	16.68	105.98	68.43	53.05	10.61		15.69				
	2-WireVG Loop used with 2-wire VG Interoffice Transport Combination - Zone 2		2	UNCVX	UEAL2	23.13	105.98	68.43	53.05	10.61		15.69				
	2-WireVG Loop used with 2-wire VG Interoffice Transport Combination - Zone 3		3	UNCVX	UEAL2	28.46	105.98	68.43	53.05	10.61		15.69				
	Interoffice Transport - Dedicated - 2-wire VG combination - Per Mile Per Month			UNCVX	1L5XX	0.0134										
	Interoffice Transport - Dedicated - 2- Wire Voice Grade combination - Facility Termination per month			UNCVX	U1TV2	19.44	40.63	27.47	16.77	6.91		15.69				
	Nonrecurring Currently Combined Network Elements Switch -As-Is Charge			UNCVX	UNCCC		5.61	5.61	7.00	7.00		15.69				
	4-WIRE VOICE GRADE EXTENDED LOOP/ 4 WIRE VOICE GRADE INTEROFFICE TRANSPORT (EEL)															
	4-WireVG Loop used with 4-wire VG Interoffice Transport Combination - Zone 1		1	UNCVX	UEAL4	32.59	132.38	94.83	59.35	14.61		15.69				
	4-WireVG Loop used with 4-wire VG Interoffice Transport Combination - Zone 2		2	UNCVX	UEAL4	43.89	132.38	94.83	59.35	14.61		15.69				
	4-WireVG Loop used with 4-wire VG Interoffice Transport Combination - Zone 3		3	UNCVX	UEAL4	43.38	132.38	94.83	59.35	14.61		15.69				
	Interoffice Transport - Dedicated - 4-wire VG combination - Per Mile Per Month			UNCVX	1L5XX	0.0134										
	Interoffice Transport - Dedicated - 4- Wire Voice Grade combination - Facility Termination per month			UNCVX	U1TV4	17.03	40.63	27.47	16.77	6.91		15.69				
	Nonrecurring Currently Combined Network Elements Switch -As-Is Charge			UNCVX	UNCCC		5.61	5.61	7.00	7.00		15.69				
	DS3 DIGITAL EXTENDED LOOP WITH DEDICATED DS3 INTEROFFICE TRANSPORT (EEL)															
	High Capacity Unbundled Local Loop - DS3 combination - Per Mile per month			UNC3X	1L5ND	12.26										
	High Capacity Unbundled Local Loop - DS3 combination - Facility Termination per month			UNC3X	UE3PX	306.36	452.52	264.53	119.75	83.77		15.69				
	Interoffice Transport - Dedicated - DS3 - Per Mile per month			UNC3X	1L5XX	6.42										

CATEGORY		RATE ELEMENTS	Interim	Zone	BCS	USOC	RATES ($)					Svc Order Submitted Elec per LSR	Svc Order Submitted Manually per LSR	Attachment: 2 Incremental Charge - Manual Svc Order vs. Electronic-1st	Attachment: 2 Incremental Charge - Manual Svc Order vs. Electronic-Add'l	Exhibit: B Incremental Charge - Manual Svc Order vs. Electronic-Disc 1st	Exhibit: B Incremental Charge - Manual Svc Order vs. Electronic-Disc Add'l
							Rec	Nonrecurring		Nonrecurring Disconnect		OSS Rates($)					
								First	Add'l	First	Add'l	SOMEC	SOMAN	SOMAN	SOMAN	SOMAN	SOMAN
		Interoffice Transport - Dedicated - DS3 combination - Facility Termination per per month			UNC3X	U1TF3	704.52	279.37	163.12	60.33	58.59		15.69				
		Nonrecurring Currently Combined Network Elements Switch -As-Is Charge			UNC3X	UNCCC		5.61	5.61	7.00	7.00		15.69				
	STS1 DIGITAL EXTENDED LOOP WITH DEDICATED STS1 INTEROFFICE TRANSPORT (EEL)																
		High Capacity Unbundled Local Loop - STS1 combination - Per Mile per month			UNCSX	1L5ND	12.26										
		High Capacity Unbundled Local Loop - STS1 combination - Facility Termination per month			UNCSX	UDLS1	313.49	452.52	264.53	119.75	83.77		15.69				
		Interoffice Transport - Dedicated - STS1 combination - Per Mile per month			UNCSX	1L5XX	6.42										
		Interoffice Transport - Dedicated - STS1 combination - Facility Termination per month			UNCSX	U1TFS	704.44	279.37	163.12	60.33	58.59		15.69				
		Nonrecurring Currently Combined Network Elements Switch -As-Is Charge			UNCSX	UNCCC		5.61	5.61	7.00	7.00		15.69				
	2-WIRE ISDN EXTENDED LOOP WITH DS1 INTEROFFICE TRANSPORT (EEL)																
		First 2-Wire ISDN Loop in a DS1 Interoffice Combination Transport - Zone 1		1	UNCNX	U1L2X	25.21	117.58	80.03	53.05	10.61		15.69				
		First 2-Wire ISDN Loop in a DS1 Interoffice Combination Transport - Zone 2		2	UNCNX	U1L2X	32.76	117.58	80.03	53.05	10.61		15.69				
		First 2-Wire ISDN Loop in a DS1 Interoffice Combination Transport - Zone 3		3	UNCNX	U1L2X	37.70	117.58	80.03	53.05	10.61		15.69				
		Interoffice Transport - Dedicated - DS1 combination - Per Mile			UNC1X	1L5XX	0.27										
		Interoffice Transport - Dedicated - DS1 combintion - Facility Termination per month			UNC1X	U1TF1	61.71	89.47	81.99	16.39	14.48		15.69				
		Channelization - Channel System DS1 to DS0 combination - per month			UNC1X	MQ1	107.57	91.24	62.71	10.56	9.81		15.69				
		2-wire ISDN COCI (BRITE) - DS1 to DS0 Channel System combination - per month			UNCNX	UC1CA	2.56	6.59	4.73				15.69				
		Additional 2-wire ISDN Loop in same DS1Interoffice Transport Combination - Zone 1		1	UNCNX	U1L2X	25.21	117.58	80.03	53.05	10.61		15.69				
		Additional 2-wire ISDN Loop in same DS1Interoffice Transport Combination - Zone 2		2	UNCNX	U1L2X	32.76	117.58	80.03	53.05	10.61		15.69				
		Additional 2-wire ISDN Loop in same DS1Interoffice Transport Combination - Zone 3		3	UNCNX	U1L2X	37.70	117.58	80.03	53.05	10.61		15.69				
		2-wire ISDN COCI (BRITE) - DS1 to DS0 Channel System combintaion- per month			UNCNX	UC1CA	2.56	6.59	4.73				15.69				
		Nonrecurring Currently Combined Network Elements Switch -As-Is Charge			UNC1X	UNCCC		5.61	5.61	7.00	7.00		15.69				
	4-WIRE DS1 DIGITAL EXTENDED LOOP WITH DEDICATED STS-1 INTEROFFICE TRANSPORT (EEL)																
		First DS1 Loop in STS1 Interoffice Transport Combination - Zone 1		1	UNC1X	USLXX	90.87	253.03	157.89	44.80	11.73		15.69				
		First DS1 Loop in STS1 Interoffice Transport Combination - Zone 2		2	UNC1X	USLXX	155.43	253.03	157.89	44.80	11.73		15.69				
		First DS1 Loop in STS1 Interoffice Transport Combination - Zone 3		3	UNC1X	USLXX	261.89	253.03	157.89	44.80	11.73		15.69				
		Interoffice Transport - Dedicated - STS1 combination - Per Mile Per Month			UNCSX	1L5XX	6.42										
		Interoffice Transport - Dedicated - STS1 combination - Facility Termination			UNCSX	U1TFS	704.44	279.37	163.12	60.33	58.59		15.69				
		STS1 to DS1 Channel System conbination per month			UNCSX	MQ3	144.02	178.54	94.18	33.33	31.90		15.69				
		DS3 Interface Unit (DS1 COCI) combination per month			UNC1X	UC1D1	8.64	6.59	4.73				15.69				
		Additional DS1Loop in STS1 Interoffice Transport Combination - Zone 1		1	UNC1X	USLXX	90.87	253.03	157.89	44.80	11.73		15.69				
		Additional DS1Loop in STS1 Interoffice Transport Combination - Zone 2		2	UNC1X	USLXX	155.43	253.03	157.89	44.80	11.73		15.69				
		Additional DS1Loop in STS1 Interoffice Transport Combination - Zone 3		3	UNC1X	USLXX	261.89	253.03	157.89	44.80	11.73		15.69				
		DS3 Interface Unit (DS1 COCI) combination per month			UNC1X	UC1D1	8.64	6.59	4.73				15.69				

UNBUNDLED NETWORK ELEMENTS - South Carolina														Attachment: 2		Exhibit: B	
CATEGORY	RATE ELEMENTS	Interim	Zone	BCS	USOC	RATES ($)					Svc Order Submitted Elec per LSR	Svc Order Submitted Manually per LSR	Incremental Charge - Manual Svc Order vs. Electronic-1st	Incremental Charge - Manual Svc Order vs. Electronic-Add'l	Incremental Charge - Manual Svc Order vs. Electronic-Disc 1st	Incremental Charge - Manual Svc Order vs. Electronic-Disc Add'l
						Rec	Nonrecurring		Nonrecurring Disconnect				OSS Rates($)			
							First	Add'l	First	Add'l	SOMEC	SOMAN	SOMAN	SOMAN	SOMAN	SOMAN
	Nonrecurring Currently Combined Network Elements Switch -As-Is Charge			UNCSX	UNCCC		5.61	5.61	7.00	7.00		15.69				
4-WIRE 56 KBPS DIGITAL EXTENDED LOOP WITH 56 KBPS INTEROFFICE TRANSPORT (EEL)																
	4-wire 56 kbps Loop/4-wire 56 kbps Interoffice Transport Combination - Zone 1		1	UNCDX	UDL56	29.93	126.66	89.12	59.35	14.61		15.69				
	4-wire 56 kbps Loop/4-wire 56 kbps Interoffice Transport Combination - Zone 2		2	UNCDX	UDL56	33.99	126.66	89.12	59.35	14.61		15.69				
	4-wire 56 kbps Loop/4-wire 56 kbps Interoffice Transport Combination - Zone 3		3	UNCDX	UDL56	34.74	126.66	89.12	59.35	14.61		15.69				
	Interoffice Transport - Dedicated - 4-wire 56 kbps combination - Per Mile			UNCDX	1L5XX	0.0134										
	Interoffice Transport - Dedicated - 4-wire 56 kbps combination - Facility Termination			UNCDX	U1TD5	13.41	40.63	27.47	16.77	6.91		15.69				
	Nonrecurring Currently Combined Network Elements Switch -As-Is Charge			UNCDX	UNCCC		5.61	5.61	7.00	7.00		15.69				
4-WIRE 64 KBPS DIGITAL EXTENDED LOOP WITH 64 KBPS INTEROFFICE TRANSPORT (EEL)																
	4-wire 64 kbps Loop/4-wire 64 kbps Interoffice Transport Combination - Zone 1		1	UNCDX	UDL64	29.93	126.66	89.12	59.35	14.61		15.69				
	4-wire 64 kbps Loop/4-wire 64 kbps Interoffice Transport Combination - Zone 2		2	UNCDX	UDL64	33.99	126.66	89.12	59.35	14.61		15.69				
	4-wire 64 kbps Loop/4-wire 64 kbps Interoffice Transport Combination - Zone 3		3	UNCDX	UDL64	34.74	126.66	89.12	59.35	14.61		15.69				
	Interoffice Transport - Dedicated - 4-wire 64 kbps combination - Per Mile			UNCDX	1L5XX	0.0134										
	Interoffice Transport - Dedicated - 4-wire 64 kbps combination - Facility Termination			UNCDX	U1TD6	13.41	40.63	27.47	16.77	6.91		15.69				
	Nonrecurring Currently Combined Network Elements Switch -As-Is Charge			UNCDX	UNCCC		5.61	5.61	7.00	7.00		15.69				
ADDITIONAL NETWORK ELEMENTS																
When used as a part of a currently combined facility, the non-recurrng charges do not apply, but a Switch As Is charge does apply.																
When used as ordinarily combined network elements in All States, the non-recurring charges apply and the Switch As Is Charge does not.																
Nonrecurring Currently Combined Network Elements "Switch As Is" Charge (One applies to each combination)																
	Nonrecurring Currently Combined Network Elements Switch -As-Is Charge - 2 wire/4-Wire VG			UNCVX	UNCCC		5.61	5.61	7.00	7.00		15.69				
	Nonrecurring Currently Combined Network Elements Switch -As-Is Charge - 56/64 kbps			UNCDX	UNCCC		5.61	5.61	7.00	7.00		15.69				
	Nonrecurring Currently Combined Network Elements Switch -As-Is Charge - DS1			UNC1X	UNCCC		5.61	5.61	7.00	7.00		15.69				
	Nonrecurring Currently Combined Network Elements Switch -As-Is Charge - DS3			UNC3X	UNCCC		5.61	5.61	7.00	7.00		15.69				
	Nonrecurring Currently Combined Network Elements Switch -As-Is Charge - STS1			UNCSX	UNCCC		5.61	5.61	7.00	7.00		15.69				
NOTE: Local Channel - Dedicated Transport - minimum billing period - Below DS3=one month, DS3 and above=four months																
	Local Channel - Dedicated - 2-Wire Voice Grade			UNCVX	ULDV2	15.33	193.53	33.24	36.72	3.21		15.69				
	Local Channel - Dedicated - 4-Wire Voice Grade			UNCVX	ULDV4	16.54	193.97	33.68	37.19	3.68		15.69				
	Local Channel - Dedicated - DS1 per month Zone 1		1	UNC1X	ULDF1	42.62	177.87	154.06	22.24	15.30		15.69				
	Local Channel - Dedicated -DS1 Per Month Zone 2		2	UNC1X	ULDF1	70.32	177.87	154.06	22.24	15.30		15.69				
	Local Channel - Dedicated - DS1- Per Month Zone 3		3	UNC1X	ULDF1	190.68	177.87	154.06	22.24	15.30		15.69				
	Local Channel - Dedicated - DS3 - Per Mile per month			UNC3X	1L5NC	11.93										
	Local Channel - Dedicated - DS3 - Facility Termination			UNC3X	ULDF3	446.00	452.52	264.53	119.75	83.77		15.69				
	Local Channel - Dedicated - STS-1- Per Mile per month			UNCSX	1L5NC	11.93										
	Local Channel - Dedicated - STS-1 - Facility Termination			UNCSX	ULDFS	435.10	452.52	264.53	119.75	83.77		15.69				
Optional Features & Functions:																
	Clear Channel Capability (SF/ESF) Option - Subsequent Activity - per DS1	I		ULDD1, U1TD1, UNC1X, USL	NRCCC		65.08					15.69				
	C-bit Parity Option - Subsequent Activity - per DS3	i		U1TD3, ULDD3, UE3, UNC3X	NRCC3		50.08					15.69				
MULTIPLEXERS																
NOTE: minimum billing period is one month for DS1 to DS0 Channel System and interfaces																

UNBUNDLED NETWORK ELEMENTS - South Carolina														Attachment: 2		Exhibit: B	
CATEGORY		RATE ELEMENTS	Interim	Zone	BCS	USOC	RATES ($)					Svc Order Submitted Elec per LSR	Svc Order Submitted Manually per LSR	Incremental Charge - Manual Svc Order vs. Electronic-1st	Incremental Charge - Manual Svc Order vs. Electronic-Add'l	Incremental Charge - Manual Svc Order vs. Electronic-Disc 1st	Incremental Charge - Manual Svc Order vs. Electronic-Disc Add'l
							Rec	Nonrecurring		Nonrecurring Disconnect		OSS Rates($)					
								First	Add'l	First	Add'l	SOMEC	SOMAN	SOMAN	SOMAN	SOMAN	SOMAN
	NOTE: minimum billing period is three months for DS3 to DS1Channel System and interfaces																
		DS1 to DS0 Channel System (with the higher-level connected to a collocation in the same SWC) per month			UXTD1	MQ1	107.57	91.24	62.71	10.56	9.81		15.69				
		DS1 to DS0 Channel System (used to channelize a DS1 Local Channel) per month			ULDD1	MQ1	107.57	91.24	62.71	10.56	9.81		15.69				
		DS1 to DS0 Channel System (used to channelize a DS1 Interoffice Channel) per month			U1TD1	MQ1	107.57	91.24	62.71	10.56	9.81		15.69				
		OCU-DP COCI (data) - DS1 to DS0 Channel System - per month (2.4-64kbs) used for a Local Loop			UDL	1D1DD	1.19	6.59	4.73				15.69				
		OCU-DP COCI (data) - DS1 to DS0 Channel System - per month (2.4-64kbs) used for connection to a channelized DS1 Local Channel in the same SWC as collocation			U1TUD	1D1DD	1.19	6.59	4.73				15.69				
		2-wire ISDN COCI (BRITE) - DS1 to DS0 Channel Systsem - per month for a Local Loop			UDN	UC1CA	2.56	6.59	4.73				15.69				
		2-wire ISDN COCI (BRITE) - DS1 to DS0 Channel Systsem - per month used for connection to a channelized DS1 Local Channel in the same SWC as collocation			U1TUB	UC1CA	2.56	6.59	4.73				15.69				
		Voice Grade COCI - DS1 to DS0 Channel System - per month used for a Local Loop			UEA	1D1VG	0.56	6.59	4.73				15.69				
		Voice Grade COCI - DS1 to DS0 Channel System - per month used for connection to a channelized DS1 Local Channel in the same SWC as collocation			U1TUC	1D1VG	0.56	6.59	4.73				15.69				
		DS3 to DS1 Channel System (with the higher level connected to a collocation in the same SWC) per month			UXTD3	MQ3	144.02	178.54	94.18	33.33	31.90		15.69				
		DS3 to DS1 Channel System (used to channelize a DS3 Local Channel) per month			ULDD3	MQ3	144.02	178.54	94.18	33.33	31.90		15.69				
		DS3 to DS1 Channel System (used to channelize a DS3 Interoffice Channel per month			U1TD3	MQ3	144.02	178.54	94.18	33.33	31.90		15.69				
		STS-1 to DS1 Channel System (with the higher level connected to a collocation in the same SWC) per month			UXTS1	MQ3	144.02	178.54	94.18	33.33	31.90		15.69				
		STS-1 to DS1 Channel System (used to channelize a STS-1 Local Channel) per month			ULDS1	MQ3	144.02	178.54	94.18	33.33	31.90		15.69				
		STS-1 to DS1 Channel System (used to channelize a STS-1 Interoffice Channel) per month			U1TS1	MQ3	144.02	178.54	94.18	33.33	31.90		15.69				
		DS1 COCI used with Loop per month			USL	UC1D1	8.64	6.59	4.73				15.69				
		DS1 COCI (used for connection to a channelized DS1 Local Channel in the same SWC as collocation) per month			U1TUA	UC1D1	8.64	6.59	4.73				15.69				
		DS1 COCI used with Interoffice Channel per month			U1TD1	UC1D1	8.64	6.59	4.73				15.69				
	Sub-Loop Feeder																
		Unbundled Sub-Loop Feeder Loop, 4-Wire DS1 - Zone 1		1	UNC1X	USBFG	55.85	102.19	64.64	62.26	17.52						
		Unbundled Sub-Loop Feeder Loop, 4-Wire DS1 - Zone 2		2	UNC1X	USBFG	109.16	102.19	64.64	62.26	17.52						
		Unbundled Sub-Loop Feeder Loop, 4-Wire DS1 - Zone 3		3	UNC1X	USBFG	203.35	102.19	64.64	62.26	17.52						
UNBUNDLED LOCAL EXCHANGE SWITCHING(PORTS)																	
	Exchange Ports																
	NOTE: Although the Port Rate includes all available features in GA, KY, LA & TN, the desired features will need to be ordered using retail USOCs																
	2-WIRE VOICE GRADE LINE PORT RATES (RES)																
		Exchange Ports - 2-Wire Analog Line Port- Res.			UEPSR	UEPRL	1.65	2.38	2.28	1.42	1.33		15.69				
		Exchange Ports - 2-Wire Analog Line Port with Caller ID - Res.			UEPSR	UEPRC	1.65	2.38	2.28	1.42	1.33		15.69				
		Exchange Ports - 2-Wire Analog Line Port outgoing only - Res.			UEPSR	UEPRO	1.65	2.38	2.28	1.42	1.33		15.69				
		Exchange Ports - 2-Wire VG unbundled SC extended local dialing parity Port with Caller ID - Res.			UEPSR	UEPAU	1.65	2.38	2.28	1.42	1.33		15.69				
		Exchange Ports - 2-Wire VG unbundled South Carolina Area Calling port with Caller ID - Res (LW8)			UEPSR	UEPAJ	1.65	2.38	2.28	1.42	1.33		15.69				
		Exchange Ports - 2-Wire VG unbundled res, low usage line port with Caller ID (LUM)			UEPSR	UEPAP	1.65	2.38	2.28	1.42	1.33		15.69				
		Exchange Ports - 2-Wire VG South Carolina Residence Dialing Plan without Caller ID			UEPSR	UEPWL	1.65	2.38	2.28	1.42	1.33		15.69				

UNBUNDLED NETWORK ELEMENTS - South Carolina														Attachment: 2		Exhibit: B	
CATEGORY	RATE ELEMENTS	Interim	Zone	BCS	USOC	RATES ($)					Svc Order Submitted Elec per LSR	Svc Order Submitted Manually per LSR	Incremental Charge - Manual Svc Order vs. Electronic-1st	Incremental Charge - Manual Svc Order vs. Electronic-Add'l	Incremental Charge - Manual Svc Order vs. Electronic-Disc 1st	Incremental Charge - Manual Svc Order vs. Electronic-Disc Add'l
						Rec	Nonrecurring		Nonrecurring Disconnect				OSS Rates($)			
							First	Add'l	First	Add'l	SOMEC	SOMAN	SOMAN	SOMAN	SOMAN	SOMAN
	Exchange Ports - 2-Wire VG South Carolina Residence Area Calling Plan without Caller ID capability			UEPSR	UEPRS	1.65	2.38	2.28	1.42	1.33		15.69				
	2-Wire voice unbundled Low Usage Line Port without Caller ID Capability			UEPSR	UEPRT	1.65	2.38	2.28	1.42	1.33		15.69				
	Subsequent Activity			UEPSR	USASC	0.00	0.00	0.00				15.69				
FEATURES																
	All Available Vertical Features			UEPSR	UEPVF	3.04	0.00	0.00				15.69				
2-WIRE VOICE GRADE LINE PORT RATES (BUS)																
	Exchange Ports - 2-Wire Analog Line Port without Caller ID - Bus			UEPSB	UEPBL	1.65	2.38	2.28	1.42	1.33		15.69				
	Exchange Ports - 2-Wire VG unbundled Line Port with unbundled port with Caller+E484 ID - Bus.			UEPSB	UEPBC	1.65	2.38	2.28	1.42	1.33		15.69				
	Exchange Ports - 2-Wire Analog Line Port outgoing only - Bus.			UEPSB	UEPBO	1.65	2.38	2.28	1.42	1.33		15.69				
	Exchange Ports - 2-Wire VG unbundled SC extended local dialing parity Port with Caller ID - Bus.			UEPSB	UEPAZ	1.65	2.38	2.28	1.42	1.33		15.69				
	Exhange Ports - 2-Wire VG unbundled incoming only port with Caller ID - Bus			UEPSB	UEPB1	1.65	2.38	2.28	1.42	1.33		15.69				
	Exchange Ports - 2-Wire VG unbundled South Carolina Bus Area Calling Port with Caller ID - Bus (LMB)			UEPSB	UEPAB	1.65	2.38	2.28	1.42	1.33		15.69				
	Exchange Ports - 2-Wire Voice South Carolina Business Dialing Plan without Caller ID			UEPSB	UEPWM	1.65	2.38	2.28	1.42	1.33		15.69				
	Exchange Ports - 2-Wire Voice South Carolina Business Area Calling Port without Caller ID			UEPSB	UEPBB	1.65	2.38	2.28	1.42	1.33		15.69				
	2-Wire voice unbundled Incoming Only Port without Caller ID Capability			UEPSB	UEPBE	1.65	2.38	2.28	1.42	1.33		15.69				
	Subsequent Activity			UEPSB	USASC	0.00	0.00	0.00				15.69				
FEATURES																
	All Available Vertical Features			UEPSB	UEPVF	3.04	0.00	0.00				15.69				
	All Available Vertical Features				UEPVF	3.04	0.00	0.00				15.69				
EXCHANGE PORT RATES (DID & PBX)																
	2-Wire VG Unbundled 2-Way PBX Trunk - Res			UEPSE	UEPRD	1.65	31.34	14.88	13.97	0.90		15.69				
	2-Wire VG Line Side Unbundled 2-Way PBX Trunk - Bus			UEPSP	UEPPC	1.65	31.34	14.88	13.97	0.90		15.69				
	2-Wire VG Line Side Unbundled Outward PBX Trunk - Bus			UEPSP	UEPPO	1.65	31.34	14.88	13.97	0.90		15.69				
	2-Wire VG Line Side Unbundled Incoming PBX Trunk - Bus			UEPSP	UEPP1	1.65	31.34	14.88	13.97	0.90		15.69				
	2-Wire Analog Long Distance Terminal PBX Trunk - Bus			UEPSP	UEPLD	1.65	31.34	14.88	13.97	0.90		15.69				
	2-Wire Voice Unbundled PBX LD Terminal Ports			UEPSP	UEPLD	1.65	31.34	14.88	13.97	0.90		15.69				
	2-Wire Vice Unbundled 2-Way PBX Usage Port			UEPSP	UEPXA	1.65	31.34	14.88	13.97	0.90		15.69				
	2-Wire Voice Unbundled PBX Toll Terminal Hotel Ports			UEPSP	UEPXB	1.65	31.34	14.88	13.97	0.90		15.69				
	2-Wire Voice Unbundled PBX LD DDD Terminals Port			UEPSP	UEPXC	1.65	31.34	14.88	13.97	0.90		15.69				
	2-Wire Voice Unbundled PBX LD Terminal Switchboard Port			UEPSP	UEPXD	1.65	31.34	14.88	13.97	0.90		15.69				
	2-Wire Voice Unbundled PBX LD Terminal Switchboard IDD Capable Port			UEPSP	UEPXE	1.65	31.34	14.88	13.97	0.90		15.69				
	2-Wire Voice Unbundled 2-Way PBX Hotel/Hospital Economy Administrative Calling Port			UEPSP	UEPXL	1.65	31.34	14.88	13.97	0.90		15.69				
	2-Wire Voice Unbundled 2-Way PBX Hotel/Hospital Economy Room Calling Port			UEPSP	UEPXM	1.65	31.34	14.88	13.97	0.90		15.69				
	2-Wire Voice Unbundled 1-Way Outgoing PBX Hotel/Hospital Discount Room Calling Port			UEPSP	UEPXO	1.65	31.34	14.88	13.97	0.90		15.69				
	2-Wire Voice Unbundled 1-Way Outgoing PBX Measured Port			UEPSP	UEPXS	1.65	31.34	14.88	13.97	0.90		15.69				
	2-Wire Voice Unbundled 2-Way PBX South Carolina Area Plus Calling Port			UEPSP	UEPXT	1.65	31.34	14.88	13.97	0.90		15.69				
	Subsequent Activity			UEPSP	USASC	0.00	0.00	0.00				15.69				
FEATURES																
	All Available Vertical Features			UEPSP UEPSE	UEPVF	3.04	0.00	0.00				15.69				
EXCHANGE PORT RATES (COIN)																
	Exchange Ports - Coin Port					1.65	2.38	2.28	1.42	1.33		15.69				
Local Switching Features offered with Port																
NOTE: Transmission/usage charges associated with POTS circuit switched usage will also apply to circuit switched voice and/or circuit switched data transmission by B-Channels associated with 2-wire ISDN ports.																

UNBUNDLED NETWORK ELEMENTS - South Carolina													Attachment: 2		Exhibit: B	
CATEGORY	RATE ELEMENTS	Interim	Zone	BCS	USOC	RATES ($)					Svc Order Submitted Elec per LSR	Svc Order Submitted Manually per LSR	Incremental Charge - Manual Svc Order vs. Electronic-1st	Incremental Charge - Manual Svc Order vs. Electronic-Add'l	Incremental Charge - Manual Svc Order vs. Electronic-Disc 1st	Incremental Charge - Manual Svc Order vs. Electronic-Disc Add'l
						Rec	Nonrecurring		Nonrecurring Disconnect		OSS Rates($)					
							First	Add'l	First	Add'l	SOMEC	SOMAN	SOMAN	SOMAN	SOMAN	SOMAN
	NOTE: Access to B Channel or D Channel Packet capabilities will be available only through BFR/New Business Request Process. Rates for the packet capabilities will be determined via the Bona Fide Request/New Business Request Process.															
UNBUNDLED LOCAL EXCHANGE SWITCHING(PORTS)																
	EXCHANGE PORT RATES															
	Exchange Ports - 2-Wire DID Port			UEPEX	UEPP2	8.86	119.57	18.78	60.03	3.77		15.69				
	Exchange Ports - DDITS Port - 4-Wire DS1 Port with DID capability			UEPDD	UEPDD	73.62	202.47	95.90	72.75	2.47		15.69				
	Exchange Ports - 2-Wire ISDN Port (See Notes below.)			UEPTX UEPSX	U1PMA	13.38	72.93	53.11	47.90	10.76		15.69				
	All Features Offered			UEPTX UEPSX	UEPVF	3.04	0.00	0.00								
	NOTE: Transmission/usage charges associated with POTS circuit switched usage will also apply to circuit switched voice and/or circuit switched data transmission by B-Channels associated with 2-wire ISDN ports.															
	NOTE: Access to B Channel or D Channel Packet capabilities will be available only through BFR/New Business Request Process. Rates for the packet capabilities will be determined via the Bona Fide Request/New Business Request Process.															
	Exchange Ports - 2-Wire ISDN Port -- Channel Profiles			UEPTX UEPSX	U1UMA	0.00	0.00	0.00								
	Exchange Ports - 4-Wire ISDN DS1 Port			UEPEX	UEPEX	107.44	204.27	101.78	79.35	20.10		15.69				
	UNBUNDLED PORT with REMOTE CALL FORWARDING CAPABILITY															
	UNBUNDLED REMOTE CALL FORWARDING SERVICE - RESIDENCE															
	Unbundled Remote Call Forwarding Service, Area Calling, Res			UEPVR	UERAC	1.65	2.38	2.28	1.42	1.33		15.69				
	Unbundled Remote Call Forwarding Service, Local Calling - Res			UEPVR	UERLC	1.65	2.38	2.28	1.42	1.33		15.69				
	Unbundled Remote Call Forwarding Service, InterLATA - Res			UEPVR	UERTE	1.65	2.38	2.28	1.42	1.33		15.69				
	Unbundled Remote Call Forwarding Service, IntraLATA - Res			UEPVR	UERTR	1.65	2.38	2.28	1.42	1.33		15.69				
	Non-Recurring															
	Unbundled Remote Call Forwarding Service - Conversion - Switch-as-is			UEPVR	USAC2		0.10	0.10				15.69				
	Unbundled Remote Call Forwarding Service - Conversion with allowed change (PIC and LPIC)			UEPVR	USACC		0.10	0.10								
	UNBUNDLED REMOTE CALL FORWARDING - Bus															
	Unbundled Remote Call Forwarding Service, Area Calling - Bus			UEPVB	UERAC	1.65	2.38	2.28	1.42	1.33		15.69				
	Unbundled Remote Call Forwarding Service, Local Calling - Bus			UEPVB	UERLC	1.65	2.38	2.28	1.42	1.33		15.69				
	Unbundled Remote Call Forwarding Service, InterLATA - Bus			UEPVB	UERTE	1.65	2.38	2.28	1.42	1.33		15.69				
	Unbundled Remote Call Forwarding Service, IntraLATA - Bus			UEPVB	UERTR	1.65	2.38	2.28	1.42	1.33		15.69				
	Unbundled Remote Call Forwarding Service Expanded and Exception Local Calling			UEPVB	UERVJ	1.65	2.38	2.28	1.42	1.33		15.69				
	Non-Recurring															
	Unbundled Remote Call Forwarding Service - Conversion - Switch-as-is			UEPVB	USAC2		0.10	0.10				15.69				
	Unbundled Remote Call Forwarding Service - Conversion with allowed change (PIC and LPIC)			UEPVB	USACC		0.10	0.10								
UNBUNDLED LOCAL SWITCHING, PORT USAGE																
	End Office Switching (Port Usage)															
	End Office Switching Function, Per MOU					0.0010519										
	End Office Trunk Port - Shared, Per MOU					0.0002136										
	Tandem Switching (Port Usage) (Local or Access Tandem)															
	Tandem Switching Function Per MOU					0.0001634										
	Tandem Trunk Port - Shared, Per MOU					0.0002863										
	Common Transport															
	Common Transport - Per Mile, Per MOU					0.0000045										
	Common Transport - Facilities Termination Per MOU					0.0004095										
UNBUNDLED PORT/LOOP COMBINATIONS - COST BASED RATES																
	Cost Based Rates are applied where BellSouth is required by FCC and/or State Commission rule to provide Unbundled Local Switching or Switch Ports.															
	Features shall apply to the Unbundled Port/Loop Combination - Cost Based Rate section in the same manner as they are applied to the Stand-Alone Unbundled Port section of this Rate Exhibit.															
	End Office and Tandem Switching Usage and Common Transport Usage rates in the Port section of this rate exhibit shall apply to all combinations of loop/port network elements except for UNE Coin Port/Loop Combinations.															
	The first and additional Port nonrecurring charges apply to Not Currently Combined Combos. For Currently Combined Combos the nonrecurring charges shall be those identified in the Nonrecurring - Currently Combined sections.															
	2-WIRE VOICE GRADE LOOP WITH 2-WIRE LINE PORT (RES)															
	UNE Port/Loop Combination Rates															
	2-Wire VG Loop/Port Combo - Zone 1		1			14.89										
	2-Wire VG Loop/Port Combo - Zone 2		2			21.52										
	2-Wire VG Loop/Port Combo - Zone 3		3			27.17										
	UNE Loop Rates															

UNBUNDLED NETWORK ELEMENTS - South Carolina														Attachment: 2		Exhibit: B	
CATEGORY		RATE ELEMENTS	Interim	Zone	BCS	USOC	RATES ($)					Svc Order Submitted Elec per LSR	Svc Order Submitted Manually per LSR	Incremental Charge - Manual Svc Order vs. Electronic-1st	Incremental Charge - Manual Svc Order vs. Electronic-Add'l	Incremental Charge - Manual Svc Order vs. Electronic-Disc 1st	Incremental Charge - Manual Svc Order vs. Electronic-Disc Add'l
							Rec	Nonrecurring		Nonrecurring Disconnect		OSS Rates($)					
								First	Add'l	First	Add'l	SOMEC	SOMAN	SOMAN	SOMAN	SOMAN	SOMAN
		2-Wire Voice Grade Loop (SL1) - Zone 1		1	UEPRX	UEPLX	13.76										
		2-Wire Voice Grade Loop (SL1) - Zone 2		2	UEPRX	UEPLX	20.38										
		2-Wire Voice Grade Loop (SL1) - Zone 3		3	UEPRX	UEPLX	26.04										
	2-Wire Voice Grade Line Port Rates (Res)																
		2-Wire voice unbundled port - residence			UEPRX	UEPRL	1.13	40.30	19.90	24.98	6.65		15.69				
		2-Wire voice unbundled port with Caller ID - res			UEPRX	UEPRC	1.13	40.30	19.90	24.98	6.65		15.69				
		2-Wire voice unbundled port outgoing only - res			UEPRX	UEPRO	1.13	40.30	19.90	24.98	6.65		15.69				
		2-Wire voice Grade unbundled South Carolina extended local dialing parity port with Caller ID - res			UEPRX	UEPAU	1.13	40.30	19.90	24.98	6.65		15.69				
		2-Wire voice unbundled South Carolina Area Calling port with Caller ID - res (LW8)			UEPRX	UEPAJ	1.13	40.30	19.90	24.98	6.65		15.69				
		2-Wire voice unbundles res, low usage line port with Caller ID (LUM)			UEPRX	UEPAP	1.13	37.93	16.72				15.69				
		2-Wire Voice Unbundled South Carolina Residence Dialing Plan without Caller ID			UEPRX	UEPWL	1.13	40.30	19.90	24.98	6.65		15.69				
		2-Wire voice unbundled South Carolina Area Calling Port without Caller ID Capability			UEPRX	UEPRS	1.13	40.30	19.90	24.98	6.65		15.69				
		2-Wire voice unbundled Low Usage Line Port without Caller ID Capability			UEPRX	UEPRT	1.13	40.30	19.90	24.98	6.65		15.69				
	FEATURES																
		All Features Offered			UEPRX	UEPVF	3.04	0.00	0.00				15.69				
	LOCAL NUMBER PORTABILITY																
		Local Number Portability (1 per port)			UEPRX	LNPCX	0.35										
	NONRECURRING CHARGES (NRCs) - CURRENTLY COMBINED																
		2-Wire Voice Grade Loop / Line Port Combination - Conversion - Switch-as-is			UEPRX	USAC2		0.10	0.10				15.69				
		2-Wire Voice Grade Loop / Line Port Combination - Conversion - Switch with change			UEPRX	USACC		0.10	0.10				15.69				
	ADDITIONAL NRCs																
		2-Wire Voice Grade Loop/Line Port Combination - Subsequent Activity			UEPRX	USAS2	0.00	0.00	0.00				15.69				
	2-WIRE VOICE GRADE LOOP WITH 2-WIRE LINE PORT (BUS)																
	UNE Port/Loop Combination Rates																
		2-Wire VG Loop/Port Combo - Zone 1		1			14.89										
		2-Wire VG Loop/Port Combo - Zone 2		2			21.52										
		2-Wire VG Loop/Port Combo - Zone 3		3			27.17										
	UNE Loop Rates																
		2-Wire Voice Grade Loop (SL1) - Zone 1		1	UEPBX	UEPLX	13.76										
		2-Wire Voice Grade Loop (SL1) - Zone 2		2	UEPBX	UEPLX	20.38										
		2-Wire Voice Grade Loop (SL1) - Zone 3		3	UEPBX	UEPLX	26.04										
	2-Wire Voice Grade Line Port (Bus)																
		2-Wire voice unbundled port without Caller ID - bus			UEPBX	UEPBL	1.13	40.30	19.90	24.98	6.65		15.69				
		2-Wire voice unbundled port with Caller + E484 ID - bus			UEPBX	UEPBC	1.13	40.30	19.90	24.98	6.65		15.69				
		2-Wire voice unbundled port outgoing only - bus			UEPBX	UEPBO	1.13	40.30	19.90	24.98	6.65		15.69				
		2-Wire voice Grade unbundled South Carolina extended local dialing parity port with Caller ID - bus			UEPBX	UEPAZ	1.13	40.30	19.90	24.98	6.65		15.69				
		2-Wire voice unbundled incoming only port with Caller ID - Bus			UEPBX	UEPB1	1.13	40.30	19.90	24.98	6.65		15.69				
		2-Wire voice unbundled South Carolina Bus Area Calling Port with Caller ID (LMB)			UEPBX	UEPAB	1.13	40.30	19.90	24.98	6.65		15.69				
		2-Wire Voice Unbundled South Carolina Business Dialing Plan without Caller ID			UEPBX	UEPWM	1.13	40.30	19.90	24.98	6.65		15.69				
		2-Wire voice unbundled South Carolina Business Area Calling Port without Caller ID Capability			UEPBX	UEPBB	1.13	40.30	19.90	24.98	6.65		15.69				
		2-Wire voice unbundled Incoming Only Port without Caller ID Capability			UEPBX	UEPBE	1.13	40.30	19.90	24.98	6.65		15.69				
	LOCAL NUMBER PORTABILITY																
		Local Number Portability (1 per port)			UEPBX	LNPCX	0.35										
	FEATURES																
		All Features Offered			UEPBX	UEPVF	3.04	0.00	0.00				15.69				

CATEGORY	RATE ELEMENTS	Interim	Zone	BCS	USOC	RATES ($)					Svc Order Submitted Elec per LSR	Svc Order Submitted Manually per LSR	Attachment: 2		Exhibit: B	
													Incremental Charge - Manual Svc Order vs. Electronic-1st	Incremental Charge - Manual Svc Order vs. Electronic-Add'l	Incremental Charge - Manual Svc Order vs. Electronic-Disc 1st	Incremental Charge - Manual Svc Order vs. Electronic-Disc Add'l
						Rec	Nonrecurring		Nonrecurring Disconnect		OSS Rates($)					
							First	Add'l	First	Add'l	SOMEC	SOMAN	SOMAN	SOMAN	SOMAN	SOMAN
NONRECURRING CHARGES (NRCs) - CURRENTLY COMBINED																
	2-Wire Voice Grade Loop / Line Port Combination - Conversion - Switch-as-is			UEPBX	USAC2		0.10	0.10				15.69				
	2-Wire Voice Grade Loop / Line Port Combination - Conversion - Switch with change			UEPBX	USACC		0.10	0.10				15.69				
ADDITIONAL NRCs																
	2-Wire Voice Grade Loop/Line Port Combination - Subsequent Activity			UEPBX	USAS2		0.00	0.00				15.69				
2-WIRE VOICE GRADE LOOP WITH 2-WIRE LINE PORT (RES - PBX)																
UNE Port/Loop Combination Rates																
	2-Wire VG Loop/Port Combo - Zone 1		1			14.89										
	2-Wire VG Loop/Port Combo - Zone 2		2			21.52										
	2-Wire VG Loop/Port Combo - Zone 3		3			27.17										
UNE Loop Rates																
	2-Wire Voice Grade Loop (SL 1) - Zone 1		1	UEPRG	UEPLX	13.76										
	2-Wire Voice Grade Loop (SL 1) - Zone 2		2	UEPRG	UEPLX	20.38										
	2-Wire Voice Grade Loop (SL 1) - Zone 3		3	UEPRG	UEPLX	26.04										
2-Wire Voice Grade Line Port Rates (RES - PBX)																
	2-Wire VG Unbundled Combination 2-Way PBX Trunk Port - Res			UEPRG	UEPRD	1.13	69.26	32.50	37.53	6.22		15.69				
LOCAL NUMBER PORTABILITY																
	Local Number Portability (1 per port)			UEPRG	LNPCP	3.15	0.00	0.00				15.69				
FEATURES																
	All Features Offered			UEPRG	UEPVF	3.04	0.00	0.00				15.69				
NONRECURRING CHARGES (NRCs) - CURRENTLY COMBINED																
	2-Wire Voice Grade Loop/ Line Port Combination (PBX) - Conversion - Switch-As-Is			UEPRG	USAC2		7.93	1.91				15.69				
	2-Wire Voice Grade Loop/ Line Port Combination (PBX) - Conversion - Switch with Change			UEPRG	USACC		7.93	1.91				15.69				
ADDITIONAL NRCs																
	2-Wire Voice Grade Loop/ Line Port Combination (PBX) - Subsequent Activity			UEPRG	USAS2	0.00	0.00	0.00				15.69				
	PBX Subsequent Activity - Change/Rearrange Multiline Hunt Group						7.34	7.34				15.69				
2-WIRE VOICE GRADE LOOP WITH 2-WIRE LINE PORT (BUS - PBX)																
UNE Port/Loop Combination Rates																
	2-Wire VG Loop/Port Combo - Zone 1		1			14.89										
	2-Wire VG Loop/Port Combo - Zone 2		2			21.52										
	2-Wire VG Loop/Port Combo - Zone 3		3			27.17										
UNE Loop Rates																
	2-Wire Voice Grade Loop (SL 1) - Zone 1		1	UEPPX	UEPLX	13.76										
	2-Wire Voice Grade Loop (SL 1) - Zone 2		2	UEPPX	UEPLX	20.38										
	2-Wire Voice Grade Loop (SL 1) - Zone 3		3	UEPPX	UEPLX	26.04										
2-Wire Voice Grade Line Port Rates (BUS - PBX)																
	Line Side Unbundled Combination 2-Way PBX Trunk Port - Bus			UEPPX	UEPPC	1.13	69.26	32.50	37.53	6.22		15.69				
	Line Side Unbundled Outward PBX Trunk Port - Bus			UEPPX	UEPPO	1.13	69.26	32.50	37.53	6.22		15.69				
	Line Side Unbundled Incoming PBX Trunk Port - Bus			UEPPX	UEPP1	1.13	69.26	32.50	37.53	6.22		15.69				
	2-Wire Voice Unbundled PBX LD Terminal Ports			UEPPX	UEPLD	1.13	69.26	32.50	37.53	6.22		15.69				
	2-Wire Voice Unbundled 2-Way Combination PBX Usage Port			UEPPX	UEPXA	1.13	69.26	32.50	37.53	6.22		15.69				
	2-Wire Voice Unbundled PBX Toll Terminal Hotel Ports			UEPPX	UEPXB	1.13	69.26	32.50	37.53	6.22		15.69				
	2-Wire Voice Unbundled PBX LD DDD Terminals Port			UEPPX	UEPXC	1.13	69.26	32.50	37.53	6.22		15.69				
	2-Wire Voice Unbundled PBX LD Terminal Switchboard Port			UEPPX	UEPXD	1.13	69.26	32.50	37.53	6.22		15.69				
	2-Wire Voice Unbundled PBX LD Terminal Switchboard IDD Capable Port			UEPPX	UEPXE	1.13	69.26	32.50	37.53	6.22		15.69				
	2-Wire Voice Unbundled 2-Way PBX Hotel/Hospital Economy Administrative Calling Port			UEPPX	UEPXL	1.13	69.26	32.50	37.53	6.22		15.69				
	2-Wire Voice Unbundled 2-Way PBX Hotel/Hospital Economy Room Calling Port			UEPPX	UEPXM	1.13	69.26	32.50	37.53	6.22		15.69				

UNBUNDLED NETWORK ELEMENTS - South Carolina														Attachment: 2		Exhibit: B	
CATEGORY	RATE ELEMENTS	Interim	Zone	BCS	USOC	RATES ($)					Svc Order Submitted Elec per LSR	Svc Order Submitted Manually per LSR	Incremental Charge - Manual Svc Order vs. Electronic-1st	Incremental Charge - Manual Svc Order vs. Electronic-Add'l	Incremental Charge - Manual Svc Order vs. Electronic-Disc 1st	Incremental Charge - Manual Svc Order vs. Electronic-Disc Add'l
						Rec	Nonrecurring		Nonrecurring Disconnect				OSS Rates($)			
							First	Add'l	First	Add'l	SOMEC	SOMAN	SOMAN	SOMAN	SOMAN	SOMAN
	2-Wire Voice Unbundled 1-Way Outgoing PBX Hotel/Hospital Discount Room Calling Port			UEPPX	UEPXO	1.13	69.26	32.50	37.53	6.22		15.69				
	2-Wire Voice Unbundled 1-Way Outgoing PBX Measured Port			UEPPX	UEPXS	1.13	69.26	32.50	37.53	6.22		15.69				
	2-Wire Voice Unbundled 2-Way PBX South Carolina Area Plus Calling Port			UEPPX	UEPXT	1.13	69.26	32.50	37.53	6.22		15.69				
LOCAL NUMBER PORTABILITY																
	Local Number Portability (1 per port)			UEPPX	LNPCP	3.15	0.00	0.00				15.69				
FEATURES																
	All Features Offered			UEPPX	UEPVF	3.04	0.00	0.00				15.69				
NONRECURRING CHARGES (NRCs) - CURRENTLY COMBINED																
	2-Wire Voice Grade Loop/ Line Port Combination (PBX) - Conversion - Switch-As-Is			UEPPX	USAC2		7.93	1.91				15.69				
	2-Wire Voice Grade Loop/ Line Port Combination (PBX) - Conversion - Switch with Change			UEPPX	USACC		7.93	1.91				15.69				
ADDITIONAL NRCs																
	2-Wire Voice Grade Loop/ Line Port Combination (PBX) - Subsequent Activity			UEPPX	USAS2	0.00	0.00	0.00				15.69				
	PBX Subsequent Activity - Change/Rearrange Multiline Hunt Group						7.34	7.34				15.69				
2-WIRE VOICE GRADE LOOP WITH 2-WIRE ANALOG LINE COIN PORT																
UNE Port/Loop Combination Rates																
	2-Wire VG Coin Port/Loop Combo – Zone 1		1			14.89										
	2-Wire VG Coin Port/Loop Combo – Zone 2		2			21.52										
	2-Wire VG Coin Port/Loop Combo – Zone 3		3			27.17										
UNE Loop Rates																
	2-Wire Voice Grade Loop (SL1) - Zone 1		1	UEPCO	UEPLX	13.76										
	2-Wire Voice Grade Loop (SL1) - Zone 2		2	UEPCO	UEPLX	20.38										
	2-Wire Voice Grade Loop (SL1) - Zone 3		3	UEPCO	UEPLX	26.04										
2-Wire Voice Grade Line Ports (COIN)																
	2-Wire Coin 2-Way without Operator Screening and without Blocking (SC)			UEPCO	UEPSD	1.13	40.30	19.90	24.98	6.65		15.69				
	2-Wire Coin 2-Way with Operator Screening and Blocking: 011, 900/976, 1+DDD (SC)			UEPCO	UEPSA	1.13	40.30	19.90	24.98	6.65		15.69				
	2-Wire Coin 2-Way with Operator Screening and 011 Blocking (SC)			UEPCO	UEPSH	1.13	40.30	19.90	24.98	6.65		15.69				
	2-Wire Coin 2-Way with Operator Screening and 011 Blocking; with Dialing Parity (SC)			UEPCO	UEPSC	1.13	40.30	19.90	24.98	6.65		15.69				
	2-Wire Coin 2-Way with Operator Screening and: 900 Blocking: 900/976, 1+DDD, 011+, and Local (SC)			UEPCO	UEPCC	1.13	40.30	19.90	24.98	6.65		15.69				
	2-Wire Coin 2-W Operator Screen: 900 Block: 900/976, 1+DDD, 011+, Local; Enhanced Call OPT 3YV (SC)			UEPCO	UEPCE	1.13	40.30	19.90	24.98	6.65		15.69				
	2-Wire Coin 2-W Operator Screen: 900 Block: 900/976, 1+DDD, 011+, Local; Enhanced Call OPT AP7 (SC)			UEPCO	UEPCF	1.13	40.30	19.90	24.98	6.65		15.69				
	2-Wire Coin Outward without Blocking and without Operator Screening (SC)			UEPCO	UEPSG	1.13	40.30	19.90	24.98	6.65		15.69				
	2-Wire Coin Outward with Operator Screening and 011 Blocking (SC)			UEPCO	UEPSF	1.13	40.30	19.90	24.98	6.65		15.69				
	2-Wire Coin Outward with Operator Screening and Blocking: 011, 900/976, 1+DDD (SC)			UEPCO	UEPSJ	1.13	40.30	19.90	24.98	6.65		15.69				
	2-Wire Coin Outward with Operator Screening and Blocking: 900/976, 1+DDD, 011+, and Local (SC)			UEPCO	UEPCM	1.13	40.30	19.90	24.98	6.65		15.69				
	2-Wire Coin Out Operator Screen & Block: 900/976, 1+DDD, 011+, Local; Enhanced Calling OPT 3YW (SC)			UEPCO	UEPCP	1.13	40.30	19.90	24.98	6.65		15.69				
	2-Wire 2-Way Smartline with 900/976 (all states except LA)			UEPCO	UEPCK	1.13	40.30	19.90	24.98	6.65		15.69				
	2-Wire Coin Outward Smartline with 900/976 (all states except LA)			UEPCO	UEPCR	1.13	40.30	19.90	24.98	6.65		15.69				
ADDITIONAL UNE COIN PORT/LOOP (RC)																
	UNE Coin Port/Loop Combo Usage (Flat Rate)			UEPCO	URECU	4.05	0.00	0.00	0.00	0.00		15.69				
LOCAL NUMBER PORTABILITY																

UNBUNDLED NETWORK ELEMENTS - South Carolina														Attachment: 2		Exhibit: B	
CATEGORY	RATE ELEMENTS	Interim	Zone	BCS	USOC	RATES ($)					Svc Order Submitted Elec per LSR	Svc Order Submitted Manually per LSR	Incremental Charge - Manual Svc Order vs. Electronic-1st	Incremental Charge - Manual Svc Order vs. Electronic-Add'l	Incremental Charge - Manual Svc Order vs. Electronic-Disc 1st	Incremental Charge - Manual Svc Order vs. Electronic-Disc Add'l
						Rec	Nonrecurring		Nonrecurring Disconnect		OSS Rates($)					
							First	Add'l	First	Add'l	SOMEC	SOMAN	SOMAN	SOMAN	SOMAN	SOMAN
	Local Number Portability (1 per port)			UEPCO	LNPCX	0.35										
NONRECURRING CHARGES - CURRENTLY COMBINED																
	2-Wire Voice Grade Loop / Line Port Combination - Conversion - Switch-as-is			UEPCO	USAC2		0.10	0.10				15.69				
	2-Wire Voice Grade Loop / Line Port Combination - Conversion - Switch with change			UEPCO	USACC		0.10	0.10				15.69				
ADDITIONAL NRCs																
	2-Wire Voice Grade Loop/Line Port Combination - Subsequent Activity			UEPCO	USAS2		0.00	0.00				15.69				
2-WIRE VOICE LOOP/ 2WIRE VOICE GRADE IO TRANSPORT/ 2-WIRE LINE PORT (RES)																
UNE Port/Loop Combination Rates																
	2-Wire VG Loop/IO Tranport/Port Combo - Zone 1		1			22.50										
	2-Wire VG Loop/IO Tranport/Port Combo - Zone 2		2			30.56										
	2-Wire VG Loop/IO Tranport/Port Combo - Zone 3		3			37.22										
UNE Loop Rates																
	2-Wire Voice Grade Loop (SL2) - Zone 1		1	UEPFR	UECF2	20.85										
	2-Wire Voice Grade Loop (SL2) - Zone 2		2	UEPFR	UECF2	28.91										
	2-Wire Voice Grade Loop (SL2) - Zone 3		3	UEPFR	UECF2	35.57										
2-Wire Voice Grade Line Port Rates (Res)																
	2-Wire voice unbundled port - residence			UEPFR	UEPRL	1.65	108.36	70.71	1.42	1.33		15.69				
	2-Wire voice unbundled port with Caller ID - res			UEPFR	UEPRC	1.65	108.36	70.71	1.42	1.33		15.69				
	2-Wire voice unbundled port outgoing only - res			UEPFR	UEPRO	1.65	108.36	70.71	1.42	1.33		15.69				
	2-Wire voice Grade unbundled South Carolina extended local dialing parity port with Caller ID - res			UEPFR	UEPAU	1.65	108.36	70.71	1.42	1.33		15.69				
	2-Wire voice unbundled South Carolina Area Calling port with Caller ID - res (LW8)			UEPFR	UEPAJ	1.65	108.36	70.71	1.42	1.33		15.69				
	2-Wire voice unbundles res, low usage line port with Caller ID (LUM)			UEPFR	UEPAP	1.65	108.36	70.71	1.42	1.33		15.69				
	2-Wire Voice Unbundled South Carolina Residence Dialing Plan without Caller ID			UEPFR	UEPWL	1.65	108.36	70.71	1.42	1.33		15.69				
INTEROFFICE TRANSPORT																
	Interoffice Transport - Dedicated - 2 Wire Voice Grade - Facility Termination			UEPFR	U1TV2	24.30	40.63	27.47	16.77	6.91						
	Interoffice Transport - Dedicated - 2 Wire Voice Grade - Per Mile or Fraction Mile			UEPFR	1L5XX	0.0167										
FEATURES																
	All Features Offered			UEPFR	UEPVF	3.04	0.00	0.00				15.69				
LOCAL NUMBER PORTABILITY																
	Local Number Portability (1 per port)			UEPFR	LNPCX	0.35										
NONRECURRING CHARGES (NRCs) - CURRENTLY COMBINED																
	2-Wire Loop / Dedicated IO Transport / 2 Wire Line Port Combination - Conversion - Switch-as-is			UEPFR	USAC2		17.00	3.74				15.69				
	2-Wire Loop / Dedicated IO Transport / 2 Wire Line Port Combination - Conversion - Switch-With-Change			UEPFR	USACC		17.00	3.74				15.69				
2-WIRE VOICE LOOP/ 2WIRE VOICE GRADE IO TRANSPORT/ 2-WIRE LINE PORT (BUS)																
UNE Port/Loop Combination Rates																
	2-Wire VG Loop/IO Tranport/Port Combo - Zone 1		1			22.50										
	2-Wire VG Loop/IO Tranport/Port Combo - Zone 2		2			30.56										
	2-Wire VG Loop/IO Tranport/Port Combo - Zone 3		3			37.22										
UNE Loop Rates																
	2-Wire Voice Grade Loop (SL2) - Zone 1		1	UEPFB	UECF2	20.85										
	2-Wire Voice Grade Loop (SL2) - Zone 2		2	UEPFB	UECF2	28.91										
	2-Wire Voice Grade Loop (SL2) - Zone 3		3	UEPFB	UECF2	35.57										
2-Wire Voice Grade Line Port (Bus)																
	2-Wire voice unbundled port without Caller ID - bus			UEPFB	UEPBL	1.65	108.36	70.71	1.42	1.33		15.69				
	2-Wire voice unbundled port with Caller + E484 ID - bus			UEPFB	UEPBC	1.65	108.36	70.71	1.42	1.33		15.69				
	2-Wire voice unbundled port outgoing only - bus			UEPFB	UEPBO	1.65	108.36	70.71	1.42	1.33		15.69				
	2-Wire voice Grade unbundled South Carolina extended local dialing parity port with Caller ID - bus			UEPFB	UEPAZ	1.65	108.36	70.71	1.42	1.33		15.69				

UNBUNDLED NETWORK ELEMENTS - South Carolina													Attachment: 2		Exhibit: B	
CATEGORY	RATE ELEMENTS	Interim	Zone	BCS	USOC	RATES ($)					Svc Order Submitted Elec per LSR	Svc Order Submitted Manually per LSR	Incremental Charge - Manual Svc Order vs. Electronic-1st	Incremental Charge - Manual Svc Order vs. Electronic-Add'l	Incremental Charge - Manual Svc Order vs. Electronic-Disc 1st	Incremental Charge - Manual Svc Order vs. Electronic-Disc Add'l
						Rec	Nonrecurring		Nonrecurring Disconnect		OSS Rates($)					
							First	Add'l	First	Add'l	SOMEC	SOMAN	SOMAN	SOMAN	SOMAN	SOMAN
	2-Wire voice unbundled incoming only port with Caller ID - Bus			UEPFB	UEPB1	1.65	108.36	70.71	1.42	1.33		15.69				
	2-Wire voice unbundled South Carolina Bus Area Calling Port with Caller ID (LMB)			UEPFB	UEPAB	1.65	108.36	70.71	1.42	1.33		15.69				
	2-Wire Voice Unbundled South Carolina Business Dialing Plan without Caller ID			UEPFB	UEPWM	1.65	108.36	70.71	1.42	1.33		15.69				
LOCAL NUMBER PORTABILITY																
	Local Number Portability (1 per port)			UEPFB	LNPCX	0.35										
INTEROFFICE TRANSPORT																
	Interoffice Transport - Dedicated - 2 Wire Voice Grade - Facility Termination			UEPFB	U1TV2	24.30	40.63	27.47	16.77	6.91						
	Interoffice Transport - Dedicated - 2 Wire Voice Grade - Per Mile or Fraction Mile			UEPFB	1L5XX	0.0167										
FEATURES																
	All Features Offered			UEPFB	UEPVF	3.04	0.00	0.00				15.69				
NONRECURRING CHARGES (NRCs) - CURRENTLY COMBINED																
	2-Wire Loop / Dedicated IO Transport / 2 Wire Line Port Combination - Conversion - Switch-as-is			UEPFB	USAC2		17.00	3.74				15.69				
	2-Wire Loop / Dedicated IO Transport / 2 Wire Line Port Combination - Conversion - Switch with change			UEPFB	USACC		17.00	3.74				15.69				
2-WIRE VOICE GRADE LOOP WITH 2-WIRE LINE PORT (BUS - PBX)																
UNE Port/Loop Combination Rates																
	2-Wire VG Loop/IO Tranport/Port Combo - Zone 1		1			22.50										
	2-Wire VG Loop/IO Tranport/Port Combo - Zone 2		2			30.56										
	2-Wire VG Loop/IO Tranport/Port Combo - Zone 3		3			37.22										
UNE Loop Rates																
	2-Wire Voice Grade Loop (SL2) - Zone 1		1	UEPFP	UECF2	20.85										
	2-Wire Voice Grade Loop (SL2) - Zone 2		2	UEPFP	UECF2	28.91										
	2-Wire Voice Grade Loop (SL2) - Zone 3		3	UEPFP	UECF2	35.57										
2-Wire Voice Grade Line Port Rates (BUS - PBX)																
	Line Side Unbundled Combination 2-Way PBX Trunk Port - Bus			UEPFP	UEPPC	1.65	137.32	83.31	67.02	11.51		15.69				
	Line Side Unbundled Outward PBX Trunk Port - Bus			UEPFP	UEPPO	1.65	137.32	83.31	67.02	11.51		15.69				
	Line Side Unbundled Incoming PBX Trunk Port - Bus			UEPFP	UEPP1	1.65	137.32	83.31	67.02	11.51		15.69				
	2-Wire Voice Unbundled PBX LD Terminal Ports			UEPFP	UEPLD	1.65	137.32	83.31	67.02	11.51		15.69				
	2-Wire Voice Unbundled 2-Way Combination PBX Usage Port			UEPFP	UEPXA	1.65	137.32	83.31	67.02	11.51		15.69				
	2-Wire Voice Unbundled PBX Toll Terminal Hotel Ports			UEPFP	UEPXB	1.65	137.32	83.31	67.02	11.51		15.69				
	2-Wire Voice Unbundled PBX LD DDD Terminals Port			UEPFP	UEPXC	1.65	137.32	83.31	67.02	11.51		15.69				
	2-Wire Voice Unbundled PBX LD Terminal Switchboard Port			UEPFP	UEPXD	1.65	137.32	83.31	67.02	11.51		15.69				
	2-Wire Voice Unbundled PBX LD Terminal Switchboard IDD Capable Port			UEPFP	UEPXE	1.65	137.32	83.31	67.02	11.51		15.69				
	2-Wire Voice Unbundled 2-Way PBX Hotel/Hospital Economy Administrative Calling Port			UEPFP	UEPXL	1.65	137.32	83.31	67.02	11.51		15.69				
	2-Wire Voice Unbundled 2-Way PBX Hotel/Hospital Economy Room Calling Port			UEPFP	UEPXM	1.65	137.32	83.31	67.02	11.51		15.69				
	2-Wire Voice Unbundled 1-Way Outgoing PBX Hotel/Hospital Discount Room Calling Port			UEPFP	UEPXO	1.65	137.32	83.31	67.02	11.51		15.69				
	2-Wire Voice Unbundled 1-Way Outgoing PBX Measured Port			UEPFP	UEPXS	1.65	137.32	83.31	67.02	11.51		15.69				
	2-Wire Voice Unbundled 2-Way PBX South Carolina Area Plus Calling Port			UEPFP	UEPXT	1.65	137.32	83.31	67.02	11.51		15.69				
LOCAL NUMBER PORTABILITY																
	Local Number Portability (1 per port)			UEPFP	LNPCP	3.15	0.00	0.00				15.69				
INTEROFFICE TRANSPORT																
	Interoffice Transport - Dedicated - 2 Wire Voice Grade - Facility Termination			UEPFP	U1TV2	24.30	40.63	27.47	16.77	6.91						
	Interoffice Transport - Dedicated - 2 Wire Voice Grade - Per Mile or Fraction Mile			UEPFP	1L5XX	0.0167										
FEATURES																
	All Features Offered			UEPFP	UEPVF	3.04	0.00	0.00				15.69				
NONRECURRING CHARGES (NRCs) - CURRENTLY COMBINED																

CATEGORY	RATE ELEMENTS	Interim	Zone	BCS	USOC	RATES ($)					Svc Order Submitted Elec per LSR	Svc Order Submitted Manually per LSR	Attachment: 2		Exhibit: B	
													Incremental Charge - Manual Svc Order vs. Electronic-1st	Incremental Charge - Manual Svc Order vs. Electronic-Add'l	Incremental Charge - Manual Svc Order vs. Electronic-Disc 1st	Incremental Charge - Manual Svc Order vs. Electronic-Disc Add'l
						Rec	Nonrecurring		Nonrecurring Disconnect		OSS Rates($)					
							First	Add'l	First	Add'l	SOMEC	SOMAN	SOMAN	SOMAN	SOMAN	SOMAN
	2-Wire Loop / Dedicated IO Transport / 2 Wire Line Port Combination - Conversion - Switch-as-is			UEPFP	USAC2		17.00	3.74				15.69				
	2-Wire Loop / Dedicated IO Transport / 2 Wire Line Port Combination - Conversion - Switch with change			UEPFP	USACC		17.00	3.74				15.69				
UNBUNDLED PORT/LOOP COMBINATIONS - COST BASED RATES																
2-WIRE VOICE GRADE LOOP- BUS ONLY - WITH 2-WIRE DID TRUNK PORT																
UNE Port/Loop Combination Rates																
	2-Wire VG Loop/2-Wire DID Trunk Port Combo - UNE Zone 1		1			23.75										
	2-Wire VG Loop/2-Wire DID Trunk Port Combo - UNE Zone 2		2			30.20										
	2-Wire VG Loop/2-Wire DID Trunk Port Combo - UNE Zone 3		3			35.52										
UNE Loop Rates																
	2-Wire Analog Voice Grade Loop - (SL2) - UNE Zone 1		1	UEPPX	UECD1	16.68										
	2-Wire Analog Voice Grade Loop - (SL2) - UNE Zone 2		2	UEPPX	UECD1	23.13										
	2-Wire Analog Voice Grade Loop - (SL2) - UNE Zone 3		3	UEPPX	UECD1	28.46										
UNE Port Rate																
	Exchange Ports - 2-Wire DID Port			UEPPX	UEPD1	7.06	225.55	87.21	113.08	14.38		15.69				
NONRECURRING CHARGES - CURRENTLY COMBINED																
	2-Wire Voice Grade Loop / 2-Wire DID Trunk Port Combination - Switch-as-is			UEPPX	USAC1		7.32	1.87				15.69				
	2-Wire Voice Grade Loop / 2-Wire DID Trunk Port Conversion with BellSouth Allowable Changes			UEPPX	USA1C		7.32	1.87				15.69				
ADDITIONAL NRCs																
	2-Wire DID Subsequent Activity - Add Trunks, Per Trunk			UEPPX	USAS1		26.84					15.69				
Telephone Number/Trunk Group Establisment Charges																
	DID Trunk Termination (One Per Port)			UEPPX	NDT	0.00	0.00	0.00				15.69				
	DID Numbers, Establish Trunk Group and Provide First Group of 20 DID Numbers			UEPPX	NDZ	0.00	0.00	0.00				15.69				
	Additional DID Numbers for each Group of 20 DID Numbers			UEPPX	ND4	0.00	0.00	0.00				15.69				
	DID Numbers, Non- consecutive DID Numbers , Per Number			UEPPX	ND5	0.00	0.00	0.00				15.69				
	Reserve Non-Consecutive DID numbers			UEPPX	ND6	0.00	0.00	0.00				15.69				
	Reserve DID Numbers			UEPPX	NDV	0.00	0.00	0.00				15.69				
LOCAL NUMBER PORTABILITY																
	Local Number Portability (1 per port)			UEPPX	LNPCP	3.15	0.00	0.00								
2-WIRE ISDN DIGITAL GRADE LOOP WITH 2-WIRE ISDN DIGITAL LINE SIDE PORT																
UNE Port/Loop Combination Rates																
	2W ISDN Digital Grade Loop/2W ISDN Digital Line Side Port - UNE Zone 1		1	UEPPB UEPPR		30.86										
	2W ISDN Digital Grade Loop/2W ISDN Digital Line Side Port - UNE Zone 2		2	UEPPB UEPPR		38.60										
	2W ISDN Digital Grade Loop/2W ISDN Digital Line Side Port - UNE Zone 3		3	UEPPB UEPPR		44.23										
UNE Loop Rates																
	2-Wire ISDN Digital Grade Loop - UNE Zone 1		1	UEPPB UEPPR	USL2X	21.90						15.69				
	2-Wire ISDN Digital Grade Loop - UNE Zone 2		2	UEPPB UEPPR	USL2X	29.64						15.69				
	2-Wire ISDN Digital Grade Loop - UNE Zone 3		3	UEPPB UEPPR	USL2X	35.27						15.69				
UNE Port Rate																
	Exchange Port - 2-Wire ISDN Line Side Port			UEPPB UEPPR	UEPPB	8.96	190.51	133.14	100.95	21.37		15.69				
NONRECURRING CHARGES - CURRENTLY COMBINED																
	2-Wire ISDN Digital Grade Loop / 2-Wire ISDN Line Side Port Combination - Conversion			UEPPB UEPPR	USACB	0.00	38.59	27.08				15.69				
ADDITIONAL NRCs																
LOCAL NUMBER PORTABILITY																
	Local Number Portability (1 per port)			UEPPB UEPPR	LNPCX	0.35	0.00	0.00								
B-CHANNEL USER PROFILE ACCESS:																
	CVS/CSD (DMS/5ESS)			UEPPB UEPPR	U1UCA	0.00	0.00	0.00								
	CVS (EWSD)			UEPPB UEPPR	U1UCB	0.00	0.00	0.00								
	CSD			UEPPB UEPPR	U1UCC	0.00	0.00	0.00								
B-CHANNEL AREA PLUS USER PROFILE ACCESS: (AL,KY,LA,MS SC,MS, & TN)																

UNBUNDLED NETWORK ELEMENTS - South Carolina

CATEGORY	RATE ELEMENTS	Interim	Zone	BCS	USOC	RATES ($) Rec	Nonrecurring First	Nonrecurring Add'l	Nonrecurring Disconnect First	Nonrecurring Disconnect Add'l	Svc Order Submitted Elec per LSR	Svc Order Submitted Manually per LSR	Attachment: 2 Incremental Charge - Manual Svc Order vs. Electronic-1st	Attachment: 2 Incremental Charge - Manual Svc Order vs. Electronic-Add'l	Exhibit: B Incremental Charge - Manual Svc Order vs. Electronic-Disc 1st	Exhibit: B Incremental Charge - Manual Svc Order vs. Electronic-Disc Add'l
											OSS Rates($)					
											SOMEC	SOMAN	SOMAN	SOMAN	SOMAN	SOMAN
	CVS/CSD (DMS/5ESS)			UEPPB UEPPR	U1UCD	0.00	0.00	0.00								
	CVS (EWSD)			UEPPB UEPPR	U1UCE	0.00	0.00	0.00								
	CSD			UEPPB UEPPR	U1UCF	0.00	0.00	0.00								
USER TERMINAL PROFILE																
	User Terminal Profile (EWSD only)			UEPPB UEPPR	U1UMA	0.00	0.00	0.00								
VERTICAL FEATURES																
	All Vertical Features - One per Channel B User Profile			UEPPB UEPPR	UEPVF	3.04	0.00	0.00				15.69				
INTEROFFICE CHANNEL MILEAGE																
	Interoffice Channel mileage each, including first mile and facilities termination			UEPPB UEPPR	M1GNC	24.30	40.63	27.47	16.77	6.91		15.69				
	Interoffice Channel mileage each, additional mile			UEPPB UEPPR	M1GNM	0.0167	0.00	0.00								
4-WIRE DS1 DIGITAL LOOP WITH 4-WIRE ISDN DS1 DIGITAL TRUNK PORT																
UNE Port/Loop Combination Rates																
	4W DS1 Digital Loop/4W ISDN DS1 Digital Trunk Port - UNE Zone 1		1	UEPPP		176.82										
	4W DS1 Digital Loop/4W ISDN DS1 Digital Trunk Port - UNE Zone 2		2	UEPPP		241.38										
	4W DS1 Digital Loop/4W ISDN DS1 Digital Trunk Port - UNE Zone 3		3	UEPPP		347.84										
UNE Loop Rates																
	4-Wire DS1 Digital Loop - UNE Zone 1		1	UEPPP	USL4P	90.87						15.69				
	4-Wire DS1 Digital Loop - UNE Zone 2		2	UEPPP	USL4P	155.43						15.69				
	4-Wire DS1 Digital Loop - UNE Zone 3		3	UEPPP	USL4P	261.89						15.69				
UNE Port Rate																
	Exchange Ports - 4-Wire ISDN DS1 Port			UEPPP	UEPPP	85.95	457.30	259.67	124.15	31.83		15.69				
NONRECURRING CHARGES - CURRENTLY COMBINED																
	4-Wire DS1 Digital Loop / 4-Wire ISDN DS1 Digital Trunk Port Combination - Conversion -Switch-as-is			UEPPP	USACP	0.00	119.34	78.73				15.69				
ADDITIONAL NRCs																
	4-Wire DS1 Loop/4-W ISDN Digtl Trk Port - Subsqt Actvy-Inward/two way Tel Nos. (except NC)			UEPPP	PR7TF		0.49	0.49				15.69				
	4-Wire DS1 Loop / 4-Wire ISDN DS1 Digital Trunk Port - Outward Tel Numbers (All States except NC)			UEPPP	PR7TO		11.54	11.54				15.69				
	4-Wire DS1 Loop / 4-Wire ISDN DS1 Digital Trk Port - Subsequent Inward Tel Numbers			UEPPP	PR7ZT		23.07	23.07				15.69				
LOCAL NUMBER PORTABILITY																
	Local Number Portability (1 per port)			UEPPP	LNPCN	1.75										
	Voice/Data			UEPPP	PR71V	0.00	0.00	0.00								
	Digital Data			UEPPP	PR71D	0.00	0.00	0.00								
	Inward Data			UEPPP	PR71E	0.00	0.00	0.00								
New or Additional "B" Channel																
	New or Additional - Voice/Data B Channel			UEPPP	PR7BV	0.00	14.56					15.69				
	New or Additional - Digital Data B Channel			UEPPP	PR7BF	0.00	14.56					15.69				
	New or Additional Inward Data B Channel			UEPPP	PR7BD	0.00	14.56					15.69				
CALL TYPES																
	Inward			UEPPP	PR7C1	0.00	0.00	0.00								
	Outward			UEPPP	PR7CO	0.00	0.00	0.00								
	Two-way			UEPPP	PR7CC	0.00	0.00	0.00								
Interoffice Channel Mileage																
	Fixed Each Including First Mile			UEPPP	1LN1A	77.4815	89.47	81.99	16.39	14.48		15.69				
	Each Airline-Fractional Additional Mile			UEPPP	1LN1B	0.3415										
4-WIRE DS1 DIGITAL LOOP WITH 4-WIRE DDITS TRUNK PORT																
UNE Port/Loop Combination Rates																
	4W DS1 Digital Loop/4W DDITS Trunk Port - UNE Zone 1		1	UEPDC		149.77										
	4W DS1 Digital Loop/4W DDITS Trunk Port - UNE Zone 2		2	UEPDC		214.33										
	4W DS1 Digital Loop/4W DDITS Trunk Port - UNE Zone 3		3	UEPDC		320.78										
UNE Loop Rates																
	4-Wire DS1 Digital Loop - UNE Zone 1		1	UEPDC	USLDC	90.87						15.69				
	4-Wire DS1 Digital Loop - UNE Zone 2		2	UEPDC	USLDC	155.43						15.69				

CATEGORY	RATE ELEMENTS	Interim	Zone	BCS	USOC	RATES ($)					Svc Order Submitted Elec per LSR	Svc Order Submitted Manually per LSR	Incremental Charge - Manual Svc Order vs. Electronic-1st	Incremental Charge - Manual Svc Order vs. Electronic-Add'l	Incremental Charge - Manual Svc Order vs. Electronic-Disc 1st	Incremental Charge - Manual Svc Order vs. Electronic-Disc Add'l
						Rec	Nonrecurring		Nonrecurring Disconnect		OSS Rates($)					
							First	Add'l	First	Add'l	SOMEC	SOMAN	SOMAN	SOMAN	SOMAN	SOMAN
	4-Wire DS1 Digital Loop - UNE Zone 3		3	UEPDC	USLDC	261.89						15.69				
UNE Port Rate																
	4-Wire DDITS Digital Trunk Port			UEPDC	UDD1T	58.90	455.50	253.79	117.55	14.20		15.69				
NONRECURRING CHARGES - CURRENTLY COMBINED																
	4-Wire DS1 Digital Loop / 4-Wire DDITS Trunk Port Combination - Switch-as-is			UEPDC	USAC4		129.78	67.17				15.69				
	4-Wire DS1 Digital Loop / 4-Wire DDITS Trunk Port Combination - Conversion with DS1 Changes			UEPDC	USAWA		129.78	67.17				15.69				
	4-Wire DS1 Digital Loop / 4-Wire DDITS Trunk Port Combination - Conversion with Change - Trunk			UEPDC	USAWB		129.78	67.17				15.69				
ADDITIONAL NRCs																
	4-Wire DS1 Loop / 4-Wire DDITS Trunk Port - Subsequent Channel Activation/Chan - 1-Way Outward Trunk			UEPDC	UDTTB		14.51	14.51				15.69				
	4-Wire DS1 Loop / 4-Wire DDITS Trunk Port - Subsqnt Channel Activation/Chan Inward Trunk w/out DID			UEPDC	UDTTC		14.51	14.51				15.69				
	4-Wire DS1 Loop / 4-Wire DDITS Trunk Port - Subsqnt Chan Activation Per Chan - Inward Trunk with DID			UEPDC	UDTTD		14.51	14.51				15.69				
	4-Wire DS1 Loop / 4-Wire DDITS Trunk Port - Subsqnt Chan Activation / Chan - 2-Way DID w User Trans			UEPDC	UDTTE		14.51	14.51				15.69				
BIPOLAR 8 ZERO SUBSTITUTION																
	B8ZS -Superframe Format			UEPDC	CCOSF		0.00	605.00				15.69				
	B8ZS - Extended Superframe Format			UEPDC	CCOEF		0.00	605.00				15.69				
Alternate Mark Inversion																
	AMI -Superframe Format			UEPDC	MCOSF		0.00	0.00								
	AMI - Extended SuperFrame Format			UEPDC	MCOPO		0.00	0.00								
Telephone Number/Trunk Group Establisment Charges																
	Telephone Number for 2-Way Trunk Group			UEPDC	UDTGX	0.00						15.69				
	Telephone Number for 1-Way Outward Trunk Group			UEPDC	UDTGY	0.00						15.69				
	Telephone Number for 1-Way Inward Trunk Group Without DID			UEPDC	UDTGZ	0.00						15.69				
	DID Numbers, Establish Trunk Group and Provide First Group of 20 DID Numbers			UEPDC	NDZ	0.00	0.00	0.00				15.69				
	DID Numbers for each Group of 20 DID Numbers			UEPDC	ND4	0.00						15.69				
	DID Numbers, Non- consecutive DID Numbers , Per Number			UEPDC	ND5	0.00	0.00	0.00				15.69				
	Reserve Non-Consecutive DID Nos.			UEPDC	ND6	0.00	0.00	0.00				15.69				
	Reserve DID Numbers			UEPDC	NDV	0.00	0.00	0.00				15.69				
Dedicated DS1 (Interoffice Channel Mileage) - FX/FCO for 4-Wire DS1 Digital Loop with 4-Wire DDITS Trunk Port																
	Interoffice Channel Mileage - Fixed rate 0-8 miles (Facilities Termination)			UEPDC	1LNO1	77.14	89.47	81.99	16.39	14.48		15.69				
	Interoffice Channel Mileage - Additional rate per mile - 0-8 miles			UEPDC	1LNOA	0.3415	0.00	0.00								
	Interoffice Channel Mileage - Fixed rate 9-25 miles (Facilities Termination)			UEPDC	1LNO2	0.00	0.00	0.00								
	Interoffice Channel Mileage - Additional rate per mile - 9-25 miles			UEPDC	1LNOB	0.3415	0.00	0.00								
	Interoffice Channel Mileage - Fixed rate 25+ miles (Facilities Termination)			UEPDC	1LNO3	0.00	0.00	0.00								
	Interoffice Channel Mileage - Additional rate per mile - 25+ miles			UEPDC	1LNOC	0.3415	0.00	0.00								
	Local Number Portability, per DS0 Activated			UEPDC	LNPCP	3.15	0.00	0.00								
	Central Office Termininating Point			UEPDC	CTG	0.00										
4-WIRE DS1 LOOP WITH CHANNELIZATION WITH PORT																
System is 1 DS1 Loop, 1 D4 Channel Bank, and up to 24 Feature Activations																
Each System can have up to 24 combinations of rates depending on type and number of ports used																
UNE DS1 Loop																
	4-Wire DS1 Loop - UNE Zone 1		1	UEPMG	USLDC	90.87	0.00	0.00								
	4-Wire DS1 Loop - UNE Zone 2		2	UEPMG	USLDC	155.43	0.00	0.00								
	4-Wire DS1 Loop - UNE Zone 3		3	UEPMG	USLDC	261.89	0.00	0.00								
UNE DSO Channelization Capacities (D4 Channel Bank Configurations)																
	24 DSO Channel Capacity - 1 per DS1			UEPMG	VUM24	82.78	0.00	0.00				15.69				

UNBUNDLED NETWORK ELEMENTS - South Carolina

CATEGORY	RATE ELEMENTS	Interim	Zone	BCS	USOC	RATES ($)					Svc Order Submitted Elec per LSR	Svc Order Submitted Manually per LSR	Attachment: 2 Incremental Charge - Manual Svc Order vs. Electronic-1st	Attachment: 2 Incremental Charge - Manual Svc Order vs. Electronic-Add'l	Exhibit: B Incremental Charge - Manual Svc Order vs. Electronic-Disc 1st	Exhibit: B Incremental Charge - Manual Svc Order vs. Electronic-Disc Add'l
						Rec	Nonrecurring		Nonrecurring Disconnect				OSS Rates($)			
							First	Add'l	First	Add'l	SOMEC	SOMAN	SOMAN	SOMAN	SOMAN	SOMAN
	48 DSO Channel Capacity - 1 per 2 DS1s			UEPMG	VUM48	165.56	0.00	0.00				15.69				
	96 DSO Channel Capacity -1per 4 DS1s			UEPMG	VUM96	331.12	0.00	0.00				15.69				
	144 DS0 Channel Capacity - 1 per 6 DS1s			UEPMG	VUM14	496.68	0.00	0.00				15.69				
	192 DS0 Channel Capacity -1 per 8 DS1s			UEPMG	VUM19	662.24	0.00	0.00				15.69				
	240 DS0 Channel Capacity - 1 per 10 DS1s			UEPMG	VUM2O	827.80	0.00	0.00				15.69				
	288 DS0 Channel Capacity - 1 per 12 DS1s			UEPMG	VUM28	993.36	0.00	0.00				15.69				
	384 DS0 Channel Capacity - 1 per 16 DS1s			UEPMG	VUM38	1,324.48	0.00	0.00				15.69				
	480 DS0 Channel Capacity - 1 per 20 DS1s			UEPMG	VUM4O	1,655.60	0.00	0.00				15.69				
	576 DS0 Channel Capacity -1 per 24 DS1s			UEPMG	VUM57	1,986.72	0.00	0.00				15.69				
	672 DS0 Channel Capacity - 1 per 28 DS1s			UEPMG	VUM67	2,317.84	0.00	0.00				15.69				
Non-Recurring Charges (NRC) Associated with 4-Wire DS1 Loop with Channeliztion with Port - Conversion Charge Based on a System																
A Minimum System configuration is One (1) DS1, One (1) D4 Channel Bank, and Up To 24 DSO Ports with Feature Activations.																
Multiples of this configuration functioning as one are considered Add'l after the minimum system configuration is counted.																
	NRC - Conversion (Currently Combined) with or without BellSouth Allowed Changes			UEPMG	USAC4	0.00	150.81	8.38				15.69				
System Additions at End User Locations Where 4-Wire DS1 Loop with Channelization with Port Combination Currently Exists and																
New (Not Currently Combined) in all states, except in Density Zone 1 of Top 8 MSA's																
	1 DS1/D4 Channel Bank - Additionally Add NRC for each Port and Assoc Fea Activation			UEPMG	VUMD4	0.00	717.71	425.81	149.08	17.69		15.69				
Bipolar 8 Zero Substitution																
	Clear Channel Capability Format, superframe - Subsequent Activity Only			UEPMG	CCOSF	0.00	0.00	605.00								
	Clear Channel Capability Format - Extended Superframe - Subsequent Activity Only			UEPMG	CCOEF	0.00	0.00	605.00								
Alternate Mark Inversion (AMI)																
	Superframe Format			UEPMG	MCOSF	0.00	0.00	0.00								
	Extended Superframe Format			UEPMG	MCOPO	0.00	0.00	0.00								
Exchange Ports Associated with 4-Wire DS1 Loop with Channelization with Port																
Exchange Ports																
	Line Side Combination Channelized PBX Trunk Port - Business			UEPPX	UEPCX	1.13	0.00	0.00	0.00	0.00		15.69				
	Line Side Outward Channelized PBX Trunk Port - Business			UEPPX	UEPOX	1.13	0.00	0.00	0.00	0.00		15.69				
	Line Side Inward Only Channelized PBX Trunk Port without DID			UEPPX	UEP1X	1.13	0.00	0.00	0.00	0.00		15.69				
	2-Wire Trunk Side Unbundled Channelized DID Trunk Port			UEPPX	UEPDM	7.09	0.00	0.00	0.00	0.00		15.69				
Feature Activations - Unbundled Loop Concentration																
	Feature (Service) Activation for each Line Port Terminated in D4 Bank			UEPPX	1PQWM	0.56	25.45	13.44	4.20	4.17		15.69				
	Feature (Service) Activation for each Trunk Port Terminated in D4 Bank			UEPPX	1PQWU	0.56	78.31	18.46	59.37	11.60		15.69				
Telephone Number/ Group Establishment Charges for DID Service																
	DID Trunk Termination (1 per Port)			UEPPX	NDT	0.00	0.00	0.00								
	Estab Trk Grp and Provide 1st 20 DID Nos. (FL,GA, NC,& SC)			UEPPX	NDZ	0.00	0.00	0.00								
	DID Numbers - groups of 20 - Valid all States			UEPPX	ND4	0.00	0.00	0.00								
	Non-Consecutive DID Numbers - per number			UEPPX	ND5	0.00	0.00	0.00								
	Reserve Non-Consecutive DID Numbers			UEPPX	ND6	0.00	0.00	0.00								
	Reserve DID Numbers			UEPPX	NDV	0.00	0.00	0.00								
Local Number Portability																
	Local Number Portability - 1 per port			UEPPX	LNPCP	3.15	0.00	0.00								
FEATURES - Vertical and Optional																
Local Switching Features Offered with Line Side Ports Only																
	All Features Available			UEPPX	UEPVF	3.04	0.00	0.00				15.69				
UNBUNDLED PORT LOOP COMBINATIONS - MARKET RATES																
Market Rates shall apply where BellSouth is not required to provide unbundled local switching or switch ports per FCC and/or State Commission rules.																
This includes:																
Unbundled port/loop combinations that are Currently Combined or Not Currently Combined in Zone 1 of the Top 8 MSAS in BellSouth's region for end users with 4 or more DS0 equivalent lines.																
The Top 8 MSAs in BellSouth's region are: FL (Orlando, Ft. Lauderdale, Miami); GA (Atlanta); LA (New Orleans); NC (Greensboro-Winston Salem-Highpoint/Charlotte-Gastonia-Rock Hill); TN (Nashville).																
BellSouth currently is developing the billing capability to mechanically bill the recurring and non-recurring Market Rates in this section except for nonrecurring charges for not currently combined in FL and NC. In the interim where BellSouth cannot bill Market Rates, BellSouth shall bill the rates in the Cost-Based section preceding in lieu of the Market Rates and reserves the right to true-up the billing difference.																

CATEGORY	RATE ELEMENTS	Interim	Zone	BCS	USOC	RATES ($) Rec	Nonrecurring First	Nonrecurring Add'l	Nonrecurring Disconnect First	Nonrecurring Disconnect Add'l	Svc Order Submitted Elec per LSR	Svc Order Submitted Manually per LSR	Attachment: 2 Incremental Charge - Manual Svc Order vs. Electronic- 1st	Attachment: 2 Incremental Charge - Manual Svc Order vs. Electronic- Add'l	Exhibit: B Incremental Charge - Manual Svc Order vs. Electronic- Disc 1st	Exhibit: B Incremental Charge - Manual Svc Order vs. Electronic- Disc Add'l
							OSS Rates($)									
							SOMEC	SOMAN	SOMAN	SOMAN	SOMAN	SOMAN				
	The Market Rate for unbundled ports includes all available features in all states.															
	End Office and Tandem Switching Usage and Common Transport Usage rates in the Port section of this rate exhibit shall apply to all combinations of loop/port network elements except for UNE Coin Port/Loop Combinations which have a flat rate usage charge (USOC: URECU).															
	For Not Currently Combined scenarios the Nonrecurring charges are listed in the First and Additional NRC columns for each Port USOC. For Currently Combined scenarios, the Nonrecurring charges are listed in the NRC - Currently Combined section. Additional NRCs may apply also and are categorized accordingly.															
	2-WIRE VOICE GRADE LOOP WITH 2-WIRE LINE PORT (RES)															
	UNE Port/Loop Combination Rates															
	2-Wire VG Loop/Port Combo - Zone 1		1			27.76										
	2-Wire VG Loop/Port Combo - Zone 2		2			34.38										
	2-Wire VG Loop/Port Combo - Zone 3		3			40.04										
	UNE Loop Rates															
	2-Wire Voice Grade Loop (SL1) - Zone 1		1	UEPRX	UEPLX	13.76										
	2-Wire Voice Grade Loop (SL1) - Zone 2		2	UEPRX	UEPLX	20.38										
	2-Wire Voice Grade Loop (SL1) - Zone 3		3	UEPRX	UEPLX	26.04										
	2-Wire Voice Grade Line Port (Res)															
	2-Wire voice unbundled port - residence			UEPRX	UEPRL	14.00	90.00	90.00				15.69				
	2-Wire voice unbundled port with Caller ID - res			UEPRX	UEPRC	14.00	90.00	90.00				15.69				
	2-Wire voice unbundled port outgoing only - res			UEPRX	UEPRO	14.00	90.00	90.00				15.69				
	2-Wire voice unbundles res, low usage line port with Caller ID (LUM)			UEPRX	UEPAP	14.00	90.00	90.00				15.69				
	2-Wire voice unbundled Low Usage Line Port without Caller ID Capability			UEPRX	UEPRT	14.00	90.00	90.00				15.69				
	2-Wire Voice Unbundled South Carolina Residence Dialing Plan without Caller ID			UEPRX	UEPWL	14.00	90.00	90.00				15.69				
	2-Wire voice unbundled South Carolina Area Calling Port without Caller ID Capability			UEPRX	UEPRS	14.00	90.00	90.00				15.69				
	LOCAL NUMBER PORTABILITY															
	Local Number Portability (1 per port)			UEPRX	LNPCX	0.35										
	FEATURES															
	All Features Offered			UEPRX	UEPVF	0.00	0.00	0.00				15.69				
	ADDITIONAL NRCs															
	NRC - 2-Wire Voice Grade Loop/Line Port Combination - Subsequent			UEPRX	USAS2		0.00	0.00				15.69				
	2-WIRE VOICE GRADE LOOP WITH 2-WIRE LINE PORT (BUS)															
	UNE Port/Loop Combination Rates															
	2-Wire VG Loop/Port Combo - Zone 1		1			27.76										
	2-Wire VG Loop/Port Combo - Zone 2		2			34.38										
	2-Wire VG Loop/Port Combo - Zone 3		3			40.04										
	UNE Loop Rates															
	2-Wire Voice Grade Loop (SL1) - Zone 1		1	UEPBX	UEPLX	13.76										
	2-Wire Voice Grade Loop (SL1) - Zone 2		2	UEPBX	UEPLX	20.38										
	2-Wire Voice Grade Loop (SL1) - Zone 3		3	UEPBX	UEPLX	26.04										
	2-Wire Voice Grade Line Port (Bus)															
	2-Wire voice unbundled port without Caller ID - bus			UEPBX	UEPBL	14.00	90.00	90.00				15.69				
	2-Wire voice unbundled port with Caller + E484 ID - bus			UEPBX	UEPBC	14.00	90.00	90.00				15.69				
	2-Wire voice unbundled port outgoing only - bus			UEPBX	UEPBO	14.00	90.00	90.00				15.69				
	2-Wire voice Grade unbundled South Carolina extended local dialing parity port with Caller ID - bus			UEPBX	UEPAZ	14.00	90.00	90.00				15.69				
	2-Wire voice unbundled South Carolina Bus Area Calling Port with Caller ID (LMB)			UEPBX	UEPAB	14.00	90.00	90.00				15.69				
	2-Wire voice unbundled Incoming Only Port without Caller ID Capability			UEPBX	UEPBE	14.00	90.00	90.00				15.69				
	2-Wire Voice Unbundled South Carolina Business Dialing Plan without Caller ID			UEPBX	UEPWM	14.00	90.00	90.00				15.69				
	2-Wire voice unbundled South Carolina Business Area Calling Port without Caller ID Capability			UEPBX	UEPBB	14.00	90.00	90.00				15.69				
	LOCAL NUMBER PORTABILITY															
	Local Number Portability (1 per port)			UEPBX	LNPCX	0.35										
	FEATURES															

UNBUNDLED NETWORK ELEMENTS - South Carolina

CATEGORY	RATE ELEMENTS	Interim	Zone	BCS	USOC	RATES ($)					Svc Order Submitted Elec per LSR	Svc Order Submitted Manually per LSR	Attachment: 2 Incremental Charge - Manual Svc Order vs. Electronic-1st	Attachment: 2 Incremental Charge - Manual Svc Order vs. Electronic-Add'l	Exhibit: B Incremental Charge - Manual Svc Order vs. Electronic-Disc 1st	Exhibit: B Incremental Charge - Manual Svc Order vs. Electronic-Disc Add'l
						Rec	Nonrecurring		Nonrecurring Disconnect		OSS Rates($)					
							First	Add'l	First	Add'l	SOMEC	SOMAN	SOMAN	SOMAN	SOMAN	SOMAN
	All Features Offered			UEPBX	UEPVF	0.00	0.00	0.00				15.69				
ADDITIONAL NRCs																
	NRC - 2-Wire Voice Grade Loop/Line Port Combination - Subsequent			UEPBX	USAS2		0.00	0.00				15.69				
2-WIRE VOICE GRADE LOOP WITH 2-WIRE LINE PORT (RES - PBX)																
UNE Port/Loop Combination Rates																
	2-Wire VG Loop/Port Combo - Zone 1		1			27.76										
	2-Wire VG Loop/Port Combo - Zone 2		2			34.38										
	2-Wire VG Loop/Port Combo - Zone 3		3			40.04										
UNE Loop Rates																
	2-Wire Voice Grade Loop (SL1) - Zone 1		1	UEPRG	UEPLX	13.76										
	2-Wire Voice Grade Loop (SL1) - Zone 2		2	UEPRG	UEPLX	20.38										
	2-Wire Voice Grade Loop (SL1) - Zone 3		3	UEPRG	UEPLX	26.04										
2-Wire Voice Grade Line Port Rates (RES - PBX)																
	2-Wire VG Unbundled Combination 2-Way PBX Trunk Port - Res			UEPRG	UEPRD	14.00	90.00	90.00				15.69				
LOCAL NUMBER PORTABILITY																
	Local Number Portability (1 per port)			UEPRG	LNPCP	3.15	0.00	0.00								
FEATURES																
	All Features Offered			UEPRG	UEPVF	0.00	0.00	0.00				15.69				
NONRECURRING CHARGES - CURRENTLY COMBINED																
ADDITIONAL NRCs																
	2 Wire Loop/Line Side Port Combination - Non feature - Subsequent Activity- Nonrecurring						0.00	0.00				15.69				
	PBX Subsequent Activity - Change/Rearrange Multiline Hunt Group						14.64	14.64				15.69				
2-WIRE VOICE GRADE LOOP WITH 2-WIRE LINE PORT (BUS - PBX)																
UNE Port/Loop Combination Rates																
	2-Wire VG Loop/Port Combo - Zone 1		1			27.76										
	2-Wire VG Loop/Port Combo - Zone 2		2			34.38										
	2-Wire VG Loop/Port Combo - Zone 3		3			40.04										
UNE Loop Rates																
	2-Wire Voice Grade Loop (SL1) - Zone 1		1	UEPPX	UEPLX	13.76										
	2-Wire Voice Grade Loop (SL1) - Zone 2		2	UEPPX	UEPLX	20.38										
	2-Wire Voice Grade Loop (SL1) - Zone 3		3	UEPPX	UEPLX	26.04										
2-Wire Voice Grade Line Port Rates (BUS - PBX)																
	Line Side Unbundled Combination 2-Way PBX Trunk Port - Bus			UEPPX	UEPPC	14.00	90.00	90.00				15.69				
	Line Side Unbundled Outward PBX Trunk Port - Bus			UEPPX	UEPPO	14.00	90.00	90.00				15.69				
	Line Side Unbundled Incoming PBX Trunk Port - Bus			UEPPX	UEPP1	14.00	90.00	90.00				15.69				
	2-Wire Voice Unbundled PBX LD Terminal Ports			UEPPX	UEPLD	14.00	90.00	90.00				15.69				
	2-Wire Voice Unbundled 2-Way Combination PBX Usage Port			UEPPX	UEPXA	14.00	90.00	90.00				15.69				
	2-Wire Voice Unbundled PBX Toll Terminal Hotel Ports			UEPPX	UEPXB	14.00	90.00	90.00				15.69				
	2-Wire Voice Unbundled PBX LD DDD Terminals Port			UEPPX	UEPXC	14.00	90.00	90.00				15.69				
	2-Wire Voice Unbundled PBX LD Terminal Switchboard Port			UEPPX	UEPXD	14.00	90.00	90.00				15.69				
	2-Wire Voice Unbundled PBX LD Terminal Switchboard IDD Capable Port			UEPPX	UEPXE	14.00	90.00	90.00				15.69				
	2-Wire Voice Unbundled 2-Way PBX Hotel/Hospital Economy Administrative Calling Port			UEPPX	UEPXL	14.00	90.00	90.00				15.69				
	2-Wire Voice Unbundled 2-Way PBX Hotel/Hospital Economy Room Calling Port			UEPPX	UEPXM	14.00	90.00	90.00				15.69				
	2-Wire Voice Unbundled 1-Way Outgoing PBX Hotel/Hospital Discount Room Calling Port			UEPPX	UEPXO	14.00	90.00	90.00				15.69				
	2-Wire Voice Unbundled 1-Way Outgoing PBX Measured Port			UEPPX	UEPXS	14.00	90.00	90.00				15.69				
LOCAL NUMBER PORTABILITY																
	Local Number Portability (1 per port)			UEPPX	LNPCP	3.15	0.00	0.00								
FEATURES																
	All Features Offered			UEPPX	UEPVF	0.00	0.00	0.00				15.69				
NONRECURRING CHARGES - CURRENTLY COMBINED																

UNBUNDLED NETWORK ELEMENTS - South Carolina													Attachment: 2		Exhibit: B	
CATEGORY	RATE ELEMENTS	Interim	Zone	BCS	USOC	RATES ($)					Svc Order Submitted Elec per LSR	Svc Order Submitted Manually per LSR	Incremental Charge - Manual Svc Order vs. Electronic-1st	Incremental Charge - Manual Svc Order vs. Electronic-Add'l	Incremental Charge - Manual Svc Order vs. Electronic-Disc 1st	Incremental Charge - Manual Svc Order vs. Electronic-Disc Add'l
						Rec	Nonrecurring		Nonrecurring Disconnect		OSS Rates($)					
							First	Add'l	First	Add'l	SOMEC	SOMAN	SOMAN	SOMAN	SOMAN	SOMAN
ADDITIONAL NRCs																
	2-Wire Voice Grade Loop/ Line Port Combination - Subsequent			UEPPX	USAS2		0.00	0.00				15.69				
	2 Wire Loop/Line Side Port Combination - Non feature - Subsequent Activity- Nonrecurring						0.00	0.00				15.69				
	PBX Subsequent Activity - Change/Rearrange Multiline Hunt Group						7.34	7.34				15.69				
2-WIRE VOICE GRADE LOOP WITH 2-WIRE ANALOG LINE COIN PORT																
UNE Port/Loop Combination Rates																
	2-Wire VG Coin Port/Loop Combo – Zone 1		1			27.76										
	2-Wire VG Coin Port/Loop Combo – Zone 2		2			34.38										
	2-Wire VG Coin Port/Loop Combo – Zone 3		3			40.04										
UNE Loop Rates																
	2-Wire Voice Grade Loop (SL1) - Zone 1		1	UEPCO	UEPLX	13.76										
	2-Wire Voice Grade Loop (SL1) - Zone 2		2	UEPCO	UEPLX	20.38										
	2-Wire Voice Grade Loop (SL1) - Zone 3		3	UEPCO	UEPLX	26.04										
2-Wire Voice Grade Line Port Rates (Coin)																
	2-Wire Coin 2-Way without Operator Screening and without Blocking (SC)			UEPCO	UEPSD	14.00	90.00	90.00				15.69				
	2-Wire Coin 2-Way with Operator Screening and Blocking: 011, 900/976, 1+DDD (AL, KY, LA, MS, SC)			UEPCO	UEPRA	14.00	90.00	90.00				15.69				
	2-Wire Coin 2-Way with Operator Screening and Blocking: 011, 900/976, 1+DDD (SC)			UEPCO	UEPSA	14.00	90.00	90.00				15.69				
	2-Wire Coin 2-Way with Operator Screening and 011 Blocking (SC)			UEPCO	UEPSH	14.00	90.00	90.00				15.69				
	2-Wire Coin 2-Way with Operator Screening and 011 Blocking; with Dialing Parity (SC)			UEPCO	UEPSC	14.00	90.00	90.00				15.69				
	2-Wire Coin 2-Way with Operator Screening and Blocking: 900/976, 1+DDD, 011+, and Local (SC)			UEPCO	UEPCC	14.00	90.00	90.00				15.69				
	2-Wire Coin 2-W Oper Screen & Blocking: 900/976, 1+DDD, 011+ & Local; Enhanced Calling OPT 3YV (SC)			UEPCO	UEPCE	14.00	90.00	90.00				15.69				
	2-Wire Coin 2-W Oper Screen & Block: 900/976, 1+DDD, 011+, & Local; Enhanced Calling OPT AP7 (SC)			UEPCO	UEPCF	14.00	90.00	90.00				15.69				
	2-Wire Coin Outward without Blocking and without Operator Screening (SC)			UEPCO	UEPSG	14.00	90.00	90.00				15.69				
	2-Wire Coin Outward with Operator Screening and 011 Blocking (SC)			UEPCO	UEPSF	14.00	90.00	90.00				15.69				
	2-Wire Coin Outward with Operator Screening and Blocking: 011, 900/976, 1+DDD (SC)			UEPCO	UEPSJ	14.00	90.00	90.00				15.69				
	2-Wire Coin Outward with Operator Screening and Blocking: 900/976, 1+DDD, 011+, and Local (SC)			UEPCO	UEPCM	14.00	90.00	90.00				15.69				
	2-Wire Coin Out Oper Screen & Block: 900/976, 1+DDD, 011+, & Local ; w/ Enhanced Call OPT 3YW (SC)			UEPCO	UEPCP	14.00	90.00	90.00				15.69				
LOCAL NUMBER PORTABILITY																
	Local Number Portability (1 per port)			UEPCO	LNPCX	0.35										
ADDITIONAL NRCs																
	2-Wire Voice Grade Loop/ Line Port Combination - Subsequent			UEPCO	USAS2		0.00	0.00				15.69				
UNBUNDLED PORT/LOOP COMBINATIONS - MARKET BASED RATES																
2-WIRE VOICE GRADE LOOP- BUS ONLY - WITH 2-WIRE DID TRUNK PORT																
	2-Wire VG Loop/2-Wire DID Trunk Port Combo - UNE Zone 1		1			73.68										
	2-Wire VG Loop/2-Wire DID Trunk Port Combo - UNE Zone 2		2			80.13										
	2-Wire VG Loop/2-Wire DID Trunk Port Combo - UNE Zone 3		3			85.46										
UNE Loop Rates																
	2-Wire Analog Voice Grade Loop - (SL2) - UNE Zone 1		1	UEPPX	UECD1	16.68										
	2-Wire Analog Voice Grade Loop - (SL2) - UNE Zone 2		2	UEPPX	UECD1	23.13										
	2-Wire Analog Voice Grade Loop - (SL2) - UNE Zone 3		3	UEPPX	UECD1	28.46										
UNE Port Rate																
	Exchange Ports - 2-Wire DID Port			UEPPX	UEPD1	57.00	600.00	75.00				15.69				

UNBUNDLED NETWORK ELEMENTS - South Carolina

CATEGORY	RATE ELEMENTS	Interim	Zone	BCS	USOC	RATES ($) Rec	Nonrecurring First	Nonrecurring Add'l	Nonrecurring Disconnect First	Nonrecurring Disconnect Add'l	Svc Order Submitted Elec per LSR SOMEC	Svc Order Submitted Manually per LSR SOMAN	Attachment: 2 Incremental Charge - Manual Svc Order vs. Electronic-1st SOMAN	Attachment: 2 Incremental Charge - Manual Svc Order vs. Electronic-Add'l SOMAN	Exhibit: B Incremental Charge - Manual Svc Order vs. Electronic-Disc 1st SOMAN	Exhibit: B Incremental Charge - Manual Svc Order vs. Electronic-Disc Add'l SOMAN
							OSS Rates($)									
	NONRECURRING CHARGES - CURRENTLY COMBINED															
	2-Wire Voice Grade Loop / 2-Wire DID Trunk Port Combination - Switch-As-Is Top 8 MSAs only			UEPPX	USAC1		125.00	75.00				15.69				
	2-Wire Voice Grade Loop / 2-Wire DID Trunk Port Conversion with BellSouth Allowable Changes Top 8 MSAs only			UEPPX	USA1C		125.00	75.00				15.69				
	ADDITIONAL NRCs															
	2-Wire DID Subsequent Activity - Add Trunks, Per Trunk			UEPPX	USAS1		53.68					15.69				
	Telephone Number/Trunk Group Establisment Charges															
	DID Trunk Termination (One Per Port)			UEPPX	NDT	0.00	0.00	0.00								
	DID Numbers, Establish Trunk Group and Provide First Group of 20 DID Numbers			UEPPX	NDZ	0.00	0.00	0.00								
	Additional DID Numbers for each Group of 20 DID Numbers			UEPPX	ND4	0.00	0.00	0.00								
	DID Numbers, Non- consecutive DID Numbers , Per Number			UEPPX	ND5	0.00	0.00	0.00								
	Reserve Non-Consecutive DID numbers			UEPPX	ND6	0.00	0.00	0.00								
	Reserve DID Numbers			UEPPX	NDV	0.00	0.00	0.00								
	LOCAL NUMBER PORTABILITY															
	Local Number Portability (1 per port)			UEPPX	LNPCP	3.15	0.00	0.00								
	2-WIRE ISDN DIGITAL GRADE LOOP WITH 2-WIRE ISDN DIGITAL LINE SIDE PORT															
	UNE Port/Loop Combination Rates															
	2W ISDN Digital Grade Loop/2W ISDN Digital Line Side Port - UNE Zone 1		1	UEPPB UEPPR		76.90										
	2W ISDN Digital Grade Loop/2W ISDN Digital Line Side Port - UNE Zone 2		2	UEPPB UEPPR		84.64										
	2W ISDN Digital Grade Loop/2W ISDN Digital Line Side Port - UNE Zone 3		3	UEPPB UEPPR		90.27										
	UNE Loop Rates															
	2-Wire ISDN Digital Grade Loop - UNE Zone 1		1	UEPPB UEPPR	USL2X	21.90										
	2-Wire ISDN Digital Grade Loop - UNE Zone 2		2	UEPPB UEPPR	USL2X	29.64										
	2-Wire ISDN Digital Grade Loop - UNE Zone 3		3	UEPPB UEPPR	USL2X	35.27										
	UNE Port Rate															
	Exchange Port - 2-Wire ISDN Line Side Port			UEPPB UEPPR	UEPPB	55.00	525.00	400.00				15.69				
	NONRECURRING CHARGES - CURRENTLY COMBINED															
	2-Wire ISDN Digital Grade Loop / 2-Wire ISDN Line Side Port Combination - Conversion - Top 8 MSAs only			UEPPB UEPPR	USACB	0.00	225.00	225.00				15.69				
	ADDITIONAL NRCs															
	LOCAL NUMBER PORTABILITY															
	Local Number Portability (1 per port)			UEPPB UEPPR	LNPCX	0.35	0.00	0.00								
	B-CHANNEL USER PROFILE ACCESS:															
	CVS/CSD (DMS/5ESS)			UEPPB UEPPR	U1UCA	0.00	0.00	0.00								
	CVS (EWSD)			UEPPB UEPPR	U1UCB	0.00	0.00	0.00								
	CSD			UEPPB UEPPR	U1UCC	0.00	0.00	0.00								
	B-CHANNEL AREA PLUS USER PROFILE ACCESS: (AL,KY,LA,MS SC,MS, & TN)															
	CVS/CSD (DMS/5ESS)			UEPPB UEPPR	U1UCD	0.00	0.00	0.00								
	CVS (EWSD)			UEPPB UEPPR	U1UCE	0.00	0.00	0.00								
	CSD			UEPPB UEPPR	U1UCF	0.00	0.00	0.00								
	USER TERMINAL PROFILE															
	User Terminal Profile (EWSD only)			UEPPB UEPPR	U1UMA	0.00	0.00	0.00								
	VERTICAL FEATURES															
	All Vertical Features - One per Channel B User Profile			UEPPB UEPPR	UEPVF	3.04	0.00	0.00								
	INTEROFFICE CHANNEL MILEAGE															
	Interoffice Channel mileage each, including first mile and facilities termination			UEPPB UEPPR	M1GNC	24.30	60.00	40.00	25.00	10.00		15.69				
	Interoffice Channel mileage each, additional mile			UEPPB UEPPR	M1GNM	0.0167	0.00	0.00								
	4-WIRE DS1 DIGITAL LOOP WITH 4-WIRE ISDN DS1 DIGITAL TRUNK PORT															
	UNE Port/Loop Combination Rates															
	4W DS1 Digital Loop/4W ISDN DS1 Digital Trunk Port - UNE Zone 1		1	UEPPP		940.87										

UNBUNDLED NETWORK ELEMENTS - South Carolina													Attachment: 2		Exhibit: B	
CATEGORY	RATE ELEMENTS	Interim	Zone	BCS	USOC	RATES ($)					Svc Order Submitted Elec per LSR	Svc Order Submitted Manually per LSR	Incremental Charge - Manual Svc Order vs. Electronic-1st	Incremental Charge - Manual Svc Order vs. Electronic-Add'l	Incremental Charge - Manual Svc Order vs. Electronic-Disc 1st	Incremental Charge - Manual Svc Order vs. Electronic-Disc Add'l
						Rec	Nonrecurring		Nonrecurring Disconnect		OSS Rates($)					
							First	Add'l	First	Add'l	SOMEC	SOMAN	SOMAN	SOMAN	SOMAN	SOMAN
	4W DS1 Digital Loop/4W ISDN DS1 Digital Trunk Port - UNE Zone 2		2	UEPPP		1,005.43										
	4W DS1 Digital Loop/4W ISDN DS1 Digital Trunk Port - UNE Zone 3		3	UEPPP		1,111.89										
UNE Loop Rates																
	4-Wire DS1 Digital Loop - UNE Zone 1		1	UEPPP	USL4P	90.87						15.69				
	4-Wire DS1 Digital Loop - UNE Zone 2		2	UEPPP	USL4P	155.43						15.69				
	4-Wire DS1 Digital Loop - UNE Zone 3		3	UEPPP	USL4P	261.89						15.69				
UNE Port Rate																
	Exchange Ports - 4-Wire ISDN DS1 Port			UEPPP	UEPPP	850.00	1,150.00	1,150.00				15.69				
NONRECURRING CHARGES - CURRENTLY COMBINED																
	4-Wire DS1 Digital Loop / 4-Wire ISDN DS1 Digital Trunk Port Combination - Conversion -Switch-As-Is Top 8 MSAs only			UEPPP	USACP	0.00	950.00	950.00				15.69				
ADDITIONAL NRCs																
	4-Wire DS1 Loop/4-W ISDN Digtl Trk Port - Subsqt Actvy-Inward/two way Telephone Numbers (except NC)			UEPPP	PR7TF		0.9822					15.69				
	4-Wire DS1 Loop / 4-Wire ISDN DS1 Digital Trunk Port - Outward Tel Numbers (All States except NC)			UEPPP	PR7TO		23.02	23.02				15.69				
	4-Wire DS1 Loop / 4-Wire ISDN DS1 Digital Trk Port - Subsequent Inward Telephone Numbers			UEPPP	PR7ZT		46.05	46.05				15.69				
LOCAL NUMBER PORTABILITY																
	Local Number Portability (1 per port)			UEPPP	LNPCN	1.75										
INTERFACE (Provsioning Only)																
	Voice/Data			UEPPP	PR71V	0.00	0.00	0.00								
	Digital Data			UEPPP	PR71D	0.00	0.00	0.00								
	Inward Data			UEPPP	PR71E	0.00	0.00	0.00								
New or Additional "B" Channel																
	New or Additional - Voice/Data B Channel			UEPPP	PR7BV	0.00	40.00									
	New or Additional - Digital Data B Channel			UEPPP	PR7BF	0.00	40.00									
	New or Additional Inward Data B Channel			UEPPP	PR7BD	0.00	40.00									
CALL TYPES																
	Inward			UEPPP	PR7C1	0.00	0.00	0.00								
	Outward			UEPPP	PR7CO	0.00	0.00	0.00								
	Two-way			UEPPP	PR7CC	0.00	0.00	0.00								
Interoffice Channel Mileage																
	Fixed Each Including First Mile			UEPPP	1LN1A	77.4815	89.47	81.99	16.39	14.48		15.69				
	Each Airline-Fractional Additional Mile			UEPPP	1LN1B	0.3415										
4-WIRE DS1 DIGITAL LOOP WITH 4-WIRE DDITS TRUNK PORT																
UNE Port/Loop Combination Rates																
	4W DS1 Digital Loop/4W DDITS Trunk Port - UNE Zone 1		1	UEPDC		840.87										
	4W DS1 Digital Loop/4W DDITS Trunk Port - UNE Zone 2		2	UEPDC		905.43										
	4W DS1 Digital Loop/4W DDITS Trunk Port - UNE Zone 3		3	UEPDC		1,011.89										
UNE Loop Rates																
	4-Wire DS1 Digital Loop - UNE Zone 1		1	UEPDC	USLDC	90.87										
	4-Wire DS1 Digital Loop - UNE Zone 2		2	UEPDC	USLDC	155.43										
	4-Wire DS1 Digital Loop - UNE Zone 3		3	UEPDC	USLDC	261.89										
UNE Port Rate																
	4-Wire DDITS Digital Trunk Port			UEPDC	UDD1T	750.00	1,005.07	478.99	213.53	20.94		15.69				
NONRECURRING CHARGES - CURRENTLY COMBINED																
	4-Wire DS1 Digital Loop / 4-Wire DDITS Trunk Port Combination - Switch-As-Is Top 8 MSAs only			UEPDC	USAC4		259.56	134.33				15.69				
	4-Wire DS1 Digital Loop / 4-Wire DDITS Trunk Port Combination - Conversion with DS1 Changes Top 8 MSAs only			UEPDC	USAWA		259.56	134.33				15.69				
	4-Wire DS1 Digital Loop / 4-Wire DDITS Trunk Port Combination - Conversion with Change - Trunk Top 8 MSAs only			UEPDC	USAWB		259.56	134.33				15.69				
ADDITIONAL NRCs																

CATEGORY	RATE ELEMENTS	Interim	Zone	BCS	USOC	RATES ($)					Svc Order Submitted Elec per LSR	Svc Order Submitted Manually per LSR	Attachment: 2		Exhibit: B	
													Incremental Charge - Manual Svc Order vs. Electronic-1st	Incremental Charge - Manual Svc Order vs. Electronic-Add'l	Incremental Charge - Manual Svc Order vs. Electronic-Disc 1st	Incremental Charge - Manual Svc Order vs. Electronic-Disc Add'l
						Rec	Nonrecurring		Nonrecurring Disconnect		OSS Rates($)					
							First	Add'l	First	Add'l	SOMEC	SOMAN	SOMAN	SOMAN	SOMAN	SOMAN
	4-Wire DS1 Loop / 4-Wire DDITS Trunk Port - NRC - Subsequent Channel Activation/Chan - 2-Way Trunk			UEPDC	UDTTA		29.01	29.01				15.69				
	4-Wire DS1 Loop / 4-Wire DDITS Trunk Port - Subsequent Channel Activation/Chan - 1-Way Outward Trunk			UEPDC	UDTTB		29.01	29.01				15.69				
	4-Wire DS1 Loop / 4-Wire DDITS Trunk Port - Subsqnt Channel Activation/Chan Inward Trunk w/out DID			UEPDC	UDTTC		29.01	29.01				15.69				
	4-Wire DS1 Loop / 4-Wire DDITS Trunk Port - Subsqnt Chan Activation Per Chan - Inward Trunk with DID			UEPDC	UDTTD		29.01	29.01				15.69				
	4-Wire DS1 Loop / 4-Wire DDITS Trunk Port - Subsqnt Chan Activation / Chan - 2-Way DID w User Trans			UEPDC	UDTTE		29.01	29.01				15.69				
BIPOLAR 8 ZERO SUBSTITUTION																
	B8ZS -Superframe Format			UEPDC	CCOSF		0.00	605.00								
	B8ZS - Extended Superframe Format			UEPDC	CCOEF		0.00	605.00								
Alternate Mark Inversion																
	AMI -Superframe Format			UEPDC	MCOSF		0.00	0.00								
	AMI - Extended SuperFrame Format			UEPDC	MCOPO		0.00	0.00								
Telephone Number/Trunk Group Establisment Charges																
	Telephone Number for 2-Way Trunk Group			UEPDC	UDTGX	0.00						15.69				
	Telephone Number for 1-Way Outward Trunk Group			UEPDC	UDTGY	0.00						15.69				
	Telephone Number for 1-Way Inward Trunk Group Without DID			UEPDC	UDTGZ	0.00						15.69				
	DID Numbers, Establish Trunk Group and Provide First Group of 20 DID Numbers			UEPDC	NDZ	0.00	0.00	0.00				15.69				
	DID Numbers for each Group of 20 DID Numbers			UEPDC	ND4	0.00						15.69				
	DID Numbers, Non- consecutive DID Numbers , Per Number			UEPDC	ND5	0.00	0.00	0.00				15.69				
	Reserve Non-Consecutive DID Nos.			UEPDC	ND6	0.00	0.00	0.00				15.69				
	Reserve DID Numbers			UEPDC	NDV	0.00	0.00	0.00				15.69				
Dedicated DS1 (Interoffice Channel Mileage) -																
FX/FCO for 4-Wire DS1 Digital Loop with 4-Wire DDITS Trunk Port																
	Interoffice Channel Mileage - Fixed rate 0-8 miles (Facilities Termination)			UEPDC	1LNO1	77.14	89.47	81.99	16.39	14.48		15.69				
	Interoffice Channel Mileage - Additional rate per mile - 0-8 miles			UEPDC	1LNOA	0.3415	0.00	0.00								
	Interoffice Channel Mileage - Fixed rate 9-25 miles (Facilities Termination)			UEPDC	1LNO2	0.00	0.00	0.00								
	Interoffice Channel Mileage - Additional rate per mile - 9-25 miles			UEPDC	1LNOB	0.7598	0.00	0.00								
	Interoffice Channel Mileage - Fixed rate 25+ miles (Facilities Termination)			UEPDC	1LNO3	0.00	0.00	0.00								
	Interoffice Channel Mileage - Additional rate per mile - 25+ miles			UEPDC	1LNOC	0.7598	0.00	0.00								
	Local Number Portability, per DS0 Activated			UEPDC	LNPCP	3.15	0.00	0.00								
	Central Office Termininating Point			UEPDC	CTG	0.00										
4-WIRE DS1 LOOP WITH CHANNELIZATION WITH PORT																
System is 1 DS1 Loop, 1 D4 Channel Bank, and up to 24 Feature Activations																
A system can have various rate combinations based on type and number of ports used																
UNE DS1 Loop																
	4-Wire DS1 Loop - UNE Zone 1		1	UEPMG	USLDC	90.87	0.00	0.00								
	4-Wire DS1 Loop - UNE Zone 2		2	UEPMG	USLDC	155.43	0.00	0.00								
	4-Wire DS1 Loop - UNE Zone 3		3	UEPMG	USLDC	261.89	0.00	0.00								
UNE DSO Channelization Capacities (D4 Channel Bank Configurations)																
	24 DSO Channel Capacity - 1 per DS1			UEPMG	VUM24	103.47	0.00	0.00				15.69				
	48 DSO Channel Capacity - 1 per 2 DS1s			UEPMG	VUM48	206.94	0.00	0.00				15.69				
	96 DSO Channel Capacity -1per 4 DS1s			UEPMG	VUM96	413.88	0.00	0.00				15.69				
	144 DS0 Channel Capacity - 1 per 6 DS1s			UEPMG	VUM14	620.82	0.00	0.00				15.69				
	192 DS0 Channel Capacity -1 per 8 DS1s			UEPMG	VUM19	827.76	0.00	0.00				15.69				
	240 DS0 Channel Capacity - 1 per 10 DS1s			UEPMG	VUM2O	1,034.70	0.00	0.00				15.69				
	288 DS0 Channel Capacity - 1 per 12 DS1s			UEPMG	VUM28	1,241.64	0.00	0.00				15.69				
	384 DS0 Channel Capacity - 1 per 16 DS1s			UEPMG	VUM38	1,655.52	0.00	0.00				15.69				
	480 DS0 Channel Capacity - 1 per 20 DS1s			UEPMG	VUM4O	2,069.40	0.00	0.00				15.69				

UNBUNDLED NETWORK ELEMENTS - South Carolina													Attachment: 2		Exhibit: B	
CATEGORY	RATE ELEMENTS	Interim	Zone	BCS	USOC	RATES ($)					Svc Order Submitted Elec per LSR	Svc Order Submitted Manually per LSR	Incremental Charge - Manual Svc Order vs. Electronic-1st	Incremental Charge - Manual Svc Order vs. Electronic-Add'l	Incremental Charge - Manual Svc Order vs. Electronic-Disc 1st	Incremental Charge - Manual Svc Order vs. Electronic-Disc Add'l
						Rec	Nonrecurring		Nonrecurring Disconnect				OSS Rates($)			
							First	Add'l	First	Add'l	SOMEC	SOMAN	SOMAN	SOMAN	SOMAN	SOMAN
	576 DS0 Channel Capacity -1 per 24 DS1s			UEPMG	VUM57	2,483.28	0.00	0.00				15.69				
	672 DS0 Channel Capacity - 1 per 28 DS1s			UEPMG	VUM67	2,897.16	0.00	0.00				15.69				
Non-Recurring Charges (NRC) Associated with 4-Wire DS1 Loop with Channeliztion with Port - Conversion Charge Based on a System																
A Minimum System configuration is One (1) DS1, One (1) D4 Channel Bank, and Up To 24 DSO Ports with Feature Activations.																
Multiples of this configuration functioning as one are considered Add'l after the minimum system configuration is counted.																
	NRC - Conversion (Currently Combined) with or without BellSouth Allowed Changes - Top 8 MSAs Only			UEPMG	USAC4	0.00	150.81	8.38				15.69				
System Additions Where Currently Combined and New (Not Currently Combined)																
In Density Zone 1 Top 8 MSAs																
	1 DS1/D4 Channel Bank - Add NRC for each Port and Assoc Fea Activation -			UEPMG	VUMD4	0.00	717.71	425.81	149.08	17.69		15.69				
Bipolar 8 Zero Substitution																
	Clear Channel Capability Format, superframe - Subsequent Activity Only			UEPMG	CCOSF	0.00	0.00	605.00								
	Clear Channel Capability Format - Extended Superframe - Subsequent Activity Only			UEPMG	CCOEF	0.00	0.00	605.00								
Alternate Mark Inversion (AMI)																
	Superframe Format			UEPMG	MCOSF	0.00	0.00	0.00								
	Extended Superframe Format			UEPMG	MCOPO	0.00	0.00	0.00								
Exchange Ports Associated with 4-Wire DS1 Loop with Channelization with Port																
Exchange Ports																
	Line Side Combination Channelized PBX Trunk Port - Business			UEPPX	UEPCX	14.00	0.00	0.00	0.00	0.00		15.69				
	Line Side Outward Channelized PBX Trunk Port - Business			UEPPX	UEPOX	14.00	0.00	0.00	0.00	0.00		15.69				
	Line Side Inward Only Channelized PBX Trunk Port without DID			UEPPX	UEP1X	14.00	0.00	0.00	0.00	0.00		15.69				
	2-Wire Trunk Side Unbundled Channelized DID Trunk Port			UEPPX	UEPDM	57.00	0.00	0.00	0.00	0.00		15.69				
Feature Activations - Unbundled Loop Concentration																
	Feature (Service) Activation for each Line Port Terminated in D4 Bank			UEPPX	1PQWM	0.70	40.00	20.00	6.00	5.00		15.69				
	Feature (Service) Activation for each Trunk Port Terminated in D4 Bank			UEPPX	1PQWU	0.70	110.00	30.00	65.00	20.00		15.69				
Telephone Number/ Group Establishment Charges for DID Service																
	DID Trunk Termination (1 per Port)			UEPPX	NDT	0.00	0.00	0.00				15.69				
	Estab Trk Grp and Provide 1st 20 DID Nos. (FL,GA, NC,& SC)			UEPPX	NDZ	0.00	0.00	0.00				15.69				
	DID Numbers - groups of 20 - Valid all States			UEPPX	ND4	0.00	0.00	0.00				15.69				
	Non-Consecutive DID Numbers - per number			UEPPX	ND5	0.00	0.00	0.00				15.69				
	Reserve Non-Consecutive DID Numbers			UEPPX	ND6	0.00	0.00	0.00				15.69				
	Reserve DID Numbers			UEPPX	NDV	0.00	0.00	0.00				15.69				
Local Number Portability																
	Local Number Portability - 1 per port			UEPPX	LNPCP	3.15	0.00	0.00								
FEATURES - Vertical and Optional																
Local Switching Features Offered with Line Side Ports Only																
	All Features Available			UEPPX	UEPVF	3.04	0.00	0.00				15.69				
UNBUNDLED CENTREX PORT/LOOP COMBINATIONS - COST BASED RATES																
1. Cost Based Rates are applied where BellSouth is required by FCC and/or State Commission rule to provide Unbundled Local Switching or Switch Ports.																
2. Features shall apply to the Unbundled Port/Loop Combination - Cost Based Rate section in the same manner as they are applied to the Stand-Alone Unbundled Port section of this Rate Exhibit.																
3. End Office and Tandem Switching Usage and Common Transport Usage rates in the Port section of this rate exhibit shall apply to all combinations of loop/port network elements except for UNE Coin Port/Loop Combinations.																
4. The first and additional Port nonrecurring charges apply to Not Currently Combined Combos. For Currently Combined Combos, the nonrecurring charges shall be those identified in the Nonrecurring - Currently Combined sections. Additional NRCs may apply also and are categorized accordingly.																
5. Market Rates for Unbundled Centrex Port/Loop Combination will be negotiated on an Individual Case Basis, until further notice.																
UNE-P CENTREX - 5ESS (Valid in All States)																
2-Wire VG Loop/2-Wire Voice Grade Port (Centrex) Combo																
UNE Port/Loop Combination Rates (Non-Design)																
	2-Wire VG Loop/2-Wire Voice Grade Port (Centrex) Port Combo - Non-Design		1	UEP95		14.89										
	2-Wire VG Loop/2-Wire Voice Grade Port (Centrex)Port Combo - Non-Design		2	UEP95		21.52										

UNBUNDLED NETWORK ELEMENTS - South Carolina														Attachment: 2		Exhibit: B	
CATEGORY	RATE ELEMENTS	Interim	Zone	BCS	USOC	RATES ($)					Svc Order Submitted Elec per LSR	Svc Order Submitted Manually per LSR	Incremental Charge - Manual Svc Order vs. Electronic-1st	Incremental Charge - Manual Svc Order vs. Electronic-Add'l	Incremental Charge - Manual Svc Order vs. Electronic-Disc 1st	Incremental Charge - Manual Svc Order vs. Electronic-Disc Add'l
						Rec	Nonrecurring		Nonrecurring Disconnect		OSS Rates($)					
							First	Add'l	First	Add'l	SOMEC	SOMAN	SOMAN	SOMAN	SOMAN	SOMAN
	2-Wire VG Loop/2-Wire Voice Grade Port (Centrex)Port Combo - Non-Design		3	UEP95		27.17										
UNE Port/Loop Combination Rates (Design)																
	2-Wire VG Loop/2-Wire Voice Grade Port (Centrex) Port Combo - Design		1	UEP95		17.81										
	2-Wire VG Loop/2-Wire Voice Grade Port (Centrex)Port Combo - Design		2	UEP95		24.26										
	2-Wire VG Loop/2-Wire Voice Grade Port (Centrex)Port Combo - Design		3	UEP95		29.59										
UNE Loop Rate																
	2-Wire Voice Grade Loop (SL 1) - Zone 1		1	UEP95	UECS1	13.76										
	2-Wire Voice Grade Loop (SL 1) - Zone 2		2	UEP95	UECS1	20.38										
	2-Wire Voice Grade Loop (SL 1) - Zone 3		3	UEP95	UECS1	26.04										
	2-Wire Voice Grade Loop (SL 2) - Zone 1		1	UEP95	UECS2	16.68										
	2-Wire Voice Grade Loop (SL 2) - Zone 2		2	UEP95	UECS2	23.13										
	2-Wire Voice Grade Loop (SL 2) - Zone 3		3	UEP95	UECS2	28.46										
UNE Port Rate																
All States																
	2-Wire Voice Grade Port (Centrex) Basic Local Area			UEP95	UEPYA	1.13	40.30	19.90	24.98	6.65		15.69				
	2-Wire Voice Grade Port (Centrex 800 termination)			UEP95	UEPYB	1.13	40.30	19.90	24.98	6.65		15.69				
	2-Wire Voice Grade Port (Centrex with Caller ID)1Basic Local Area			UEP95	UEPYH	1.13	40.30	19.90	24.98	6.65		15.69				
	2-Wire Voice Grade Port (Centrex from diff Serving Wire Center)2 Basic Local Area			UEP95	UEPYM	1.13	108.36	70.71	54.47	11.94		15.69				
	2-Wire Voice Grade Port, Diff Serving Wire Center - 800 Service Term - Basic Local Area			UEP95	UEPYZ	1.13	108.36	70.71	54.47	11.94		15.69				
	2-Wire Voice Grade Port terminated in on Megalink or equivalent - Basic Local Area			UEP95	UEPY9	1.13	40.30	19.90	24.98	6.65		15.69				
	2-Wire Voice Grade Port Terminated on 800 Service Term - Basic Local Area			UEP95	UEPY2	1.13	40.30	19.90	24.98	6.65		15.69				
AL, KY, LA, MS, SC, & TN Only																
	2-Wire Voice Grade Port (Centrex)			UEP95	UEPQA	1.13	40.30	19.90	24.98	6.65		15.69				
	2-Wire Voice Grade Port (Centrex 800 termination)			UEP95	UEPQB	1.13	40.30	19.90	24.98	6.65		15.69				
	2-Wire Voice Grade Port (Centrex with Caller ID)1			UEP95	UEPQH	1.13	40.30	19.90	24.98	6.65		15.69				
	2-Wire Voice Grade Port (Centrex from diff Serving Wire Center)2			UEP95	UEPQM	1.13	108.36	70.71	54.47	11.94		15.69				
	2-Wire Voice Grade Port, Diff Serving Wire Center - 800 Service Term			UEP95	UEPQZ	1.13	108.36	70.71	54.47	11.94		15.69				
	2-Wire Voice Grade Port terminated in on Megalink or equivalent			UEP95	UEPQ9	1.13	40.30	19.90	24.98	6.65		15.69				
	2-Wire Voice Grade Port Terminated on 800 Service Term			UEP95	UEPQ2	1.13	40.30	19.90	24.98	6.65		15.69				
Local Switching																
	Centrex Intercom Funtionality, per port			UEP95	URECS	0.7996										
Local Number Portability																
	Local Number Portability (1 per port)			UEP95	LNPCC	0.35										
Features																
	All Standard Features Offered, per port			UEP95	UEPVF	3.04						15.69				
	All Select Features Offered, per port			UEP95	UEPVS	0.00	406.42					15.69				
	All Centrex Control Features Offered, per port			UEP95	UEPVC	3.04						15.69				
NARS																
	Unbundled Network Access Register - Combination			UEP95	UARCX	0.00	0.00	0.00				15.69				
	Unbundled Network Access Register - Indial			UEP95	UAR1X	0.00	0.00	0.00				15.69				
	Unbundled Network Access Register - Outdial			UEP95	UAROX	0.00	0.00	0.00				15.69				
Miscellaneous Terminations																
2-Wire Trunk Side																
	Trunk Side Terminations, each			UEP95	CEND6	8.86	119.57	18.78	60.03	3.77		15.69				
4-Wire Digital (1.544 Megabits)																
	DS1 Circuit Terminations, each			UEP95	M1HD1	73.62	202.47	95.90	72.75	2.47		15.69				
	DS0 Channels Activated, each			UEP95	M1HDO	0.00	14.51					15.69				

CATEGORY	RATE ELEMENTS	Interim	Zone	BCS	USOC	RATES ($)					Svc Order Submitted Elec per LSR	Svc Order Submitted Manually per LSR	Attachment: 2		Exhibit: B	
													Incremental Charge - Manual Svc Order vs. Electronic-1st	Incremental Charge - Manual Svc Order vs. Electronic-Add'l	Incremental Charge - Manual Svc Order vs. Electronic-Disc 1st	Incremental Charge - Manual Svc Order vs. Electronic-Disc Add'l
						Rec	Nonrecurring		Nonrecurring Disconnect		OSS Rates($)					
							First	Add'l	First	Add'l	SOMEC	SOMAN	SOMAN	SOMAN	SOMAN	SOMAN
	Interoffice Channel Mileage - 2-Wire															
	Interoffice Channel Facilities Termination			UEP95	M1GBC	24.30	40.63	27.47	16.77	6.91		15.69				
	Interoffice Channel mileage, per mile or fraction of mile			UEP95	M1GBM	0.0167										
	Feature Activations (DS0) Centrex Loops on Channelized DS1 Service															
	D4 Channel Bank Feature Activations															
	Feature Activation on D-4 Channel Bank Centrex Loop Slot			UEP95	1PQWS	0.56						15.69				
	Feature Activation on D-4 Channel Bank FX line Side Loop Slot			UEP95	1PQW6	0.56						15.69				
	Feature Activation on D-4 Channel Bank FX Trunk Side Loop Slot			UEP95	1PQW7	0.56						15.69				
	Feature Activation on D-4 Channel Bank Centrex Loop Slot - Different Wire Center			UEP95	1PQWP	0.56						15.69				
	Feature Activation on D-4 Channel Bank Private Line Loop Slot			UEP95	1PQWV	0.56						15.69				
	Feature Activation on D-4 Channel Bank Tjie Line/Trunk Loop Slot			UEP95	1PQWQ	0.56						15.69				
	Feature Activation on D-4 Channel Bank WATS Loop Slot			UEP95	1PQWA	0.56						15.69				
	Non-Recurring Charges (NRC) Associated with UNE-P Centrex															
	NRC Conversion Currently Combined Switch-As-Is with allowed changes, per port			UEP95	USAC2		37.93	16.72				15.69				
	New Centrex Standard Common Block			UEP95	M1ACS	0.00	668.70					15.69				
	New Centrex Customized Common Block			UEP95	M1ACC	0.00	668.70					15.69				
	NAR Establishment Charge, Per Occasion			UEP95	URECA	0.00	72.89					15.69				
	UNE-P CENTREX - DMS100 (Valid in All States)															
	2-Wire VG Loop/2-Wire Voice Grade Port (Centrex) Combo															
	UNE Port/Loop Combination Rates (Non-Design)															
	2-Wire VG Loop/2-Wire Voice Grade Port (Centrex) Port Combo - Non-Design		1	UEP9D		14.89										
	2-Wire VG Loop/2-Wire Voice Grade Port (Centrex)Port Combo - Non-Design		2	UEP9D		21.52										
	2-Wire VG Loop/2-Wire Voice Grade Port (Centrex)Port Combo - Non-Design		3	UEP9D		27.17										
	UNE Port/Loop Combination Rates (Design)															
	2-Wire VG Loop/2-Wire Voice Grade Port (Centrex) Port Combo - Design		1	UEP9D		17.81										
	2-Wire VG Loop/2-Wire Voice Grade Port (Centrex)Port Combo - Design		2	UEP9D		24.26										
	2-Wire VG Loop/2-Wire Voice Grade Port (Centrex)Port Combo - Design		3	UEP9D		29.59										
	UNE Loop Rate															
	2-Wire Voice Grade Loop (SL 1) - Zone 1		1	UEP9D	UECS1	13.76										
	2-Wire Voice Grade Loop (SL 1) - Zone 2		2	UEP9D	UECS1	20.38										
	2-Wire Voice Grade Loop (SL 1) - Zone 3		3	UEP9D	UECS1	26.04										
	2-Wire Voice Grade Loop (SL 2) - Zone 1		1	UEP9D	UECS2	16.68										
	2-Wire Voice Grade Loop (SL 2) - Zone 2		2	UEP9D	UECS2	23.13										
	2-Wire Voice Grade Loop (SL 2) - Zone 3		3	UEP9D	UECS2	28.46										
	UNE Port Rate															
	ALL STATES															
	2-Wire Voice Grade Port (Centrex) Basic Local Area			UEP9D	UEPYA	1.13	40.30	19.90	24.98	6.65		15.69				
	2-Wire Voice Grade Port (Centrex 800 termination)Basic Local Area			UEP9D	UEPYB	1.13	40.30	19.90	24.98	6.65		15.69				
	2-Wire Voice Grade Port (Centrex / EBS-PSET)3Basic Local Area			UEP9D	UEPYC	1.13	40.30	19.90	24.98	6.65		15.69				
	2-Wire Voice Grade Port (Centrex / EBS-M5009)3Basic Local Area			UEP9D	UEPYD	1.13	40.30	19.90	24.98	6.65		15.69				
	2-Wire Voice Grade Port (Centrex / EBS-M5209))3 Basic Local Area			UEP9D	UEPYE	1.13	40.30	19.90	24.98	6.65		15.69				
	2-Wire Voice Grade Port (Centrex / EBS-M5112))3 Basic Local Area			UEP9D	UEPYF	1.13	40.30	19.90	24.98	6.65		15.69				

CATEGORY		RATE ELEMENTS	Interim	Zone	BCS	USOC	RATES ($)					Svc Order Submitted Elec per LSR	Svc Order Submitted Manually per LSR	Attachment: 2 Incremental Charge - Manual Svc Order vs. Electronic-1st	Attachment: 2 Incremental Charge - Manual Svc Order vs. Electronic-Add'l	Exhibit: B Incremental Charge - Manual Svc Order vs. Electronic-Disc 1st	Exhibit: B Incremental Charge - Manual Svc Order vs. Electronic-Disc Add'l
							Rec	Nonrecurring		Nonrecurring Disconnect		OSS Rates($)					
								First	Add'l	First	Add'l	SOMEC	SOMAN	SOMAN	SOMAN	SOMAN	SOMAN
		2-Wire Voice Grade Port (Centrex / EBS-M5312))3Basic Local Area			UEP9D	UEPYG	1.13	40.30	19.90	24.98	6.65		15.69				
		2-Wire Voice Grade Port (Centrex / EBS-M5008))3 Basic Local Area			UEP9D	UEPYT	1.13	40.30	19.90	24.98	6.65		15.69				
		2-Wire Voice Grade Port (Centrex / EBS-M5208))3 Basic Local Area			UEP9D	UEPYU	1.13	40.30	19.90	24.98	6.65		15.69				
		2-Wire Voice Grade Port (Centrex / EBS-M5216))3 Basic Local Area			UEP9D	UEPYV	1.13	40.30	19.90	24.98	6.65		15.69				
		2-Wire Voice Grade Port (Centrex / EBS-M5316))3 Basic Local Area			UEP9D	UEPY3	1.13	40.30	19.90	24.98	6.65		15.69				
		2-Wire Voice Grade Port (Centrex with Caller ID) Basic Local Area			UEP9D	UEPYH	1.13	40.30	19.90	24.98	6.65		15.69				
		2-Wire Voice Grade Port (Centrex/Caller ID/Msg Wtg Lamp Indication))3 Basic Local Area			UEP9D	UEPYW	1.13	40.30	19.90	24.98	6.65		15.69				
		2-Wire Voice Grade Port (Centrex/Msg Wtg Lamp Indication))3 Basic Local Area			UEP9D	UEPYJ	1.13	40.30	19.90	24.98	6.65		15.69				
		2-Wire Voice Grade Port (Centrex from diff Serving Wire Center) 2 Basic Local Area			UEP9D	UEPYM	1.13	108.36	70.71	54.47	11.94		15.69				
		2-Wire Voice Grade Port (Centrex/differ SWC /EBS-PSET)2, 3 Basic Local Area			UEP9D	UEPYO	1.13	108.36	70.71	54.47	11.94		15.69				
		2-Wire Voice Grade Port (Centrex/differ SWC /EBS-M5009)2, 3 Basic Local Area			UEP9D	UEPYP	1.13	108.36	70.71	54.47	11.94		15.69				
		2-Wire Voice Grade Port (Centrex/differ SWC /EBS-5209)2, 3 Basic Local Area			UEP9D	UEPYQ	1.13	108.36	70.71	54.47	11.94		15.69				
		2-Wire Voice Grade Port (Centrex/differ SWC /EBS-M5112)2, 3 Basic Local Area			UEP9D	UEPYR	1.13	108.36	70.71	54.47	11.94		15.69				
		2-Wire Voice Grade Port (Centrex/differ SWC /EBS-M5312)2, 3 Basic Local Area			UEP9D	UEPYS	1.13	108.36	70.71	54.47	11.94		15.69				
		2-Wire Voice Grade Port (Centrex/differ SWC /EBS-M5008)2, 3 Basic Local Area			UEP9D	UEPY4	1.13	108.36	70.71	54.47	11.94		15.69				
		2-Wire Voice Grade Port (Centrex/differ SWC /EBS-M5208)2, 3 Basic Local Area			UEP9D	UEPY5	1.13	108.36	70.71	54.47	11.94		15.69				
		2-Wire Voice Grade Port (Centrex/differ SWC /EBS-M5216)2, 3 Basic Local Area			UEP9D	UEPY6	1.13	108.36	70.71	54.47	11.94		15.69				
		2-Wire Voice Grade Port (Centrex/differ SWC /EBS-M5316)2, 3 Basic Local Area			UEP9D	UEPY7	1.13	108.36	70.71	54.47	11.94		15.69				
		2-Wire Voice Grade Port, Diff Serving Wire Center - 800 Service Term			UEP9D	UEPYZ	1.13	108.36	70.71	54.47	11.94		15.69				
		2-Wire Voice Grade Port terminated in on Megalink or equivalent Basic Local Area			UEP9D	UEPY9	1.13	40.30	19.90	24.98	6.65		15.69				
		2-Wire Voice Grade Port Terminated on 800 Service Term Basic Local Area			UEP9D	UEPY2	1.13	40.30	19.90	24.98	6.65		15.69				
	AL, KY, LA, MS, SC, & TN Only																
		2-Wire Voice Grade Port (Centrex)			UEP9D	UEPQA	1.13	40.30	19.90	24.98	6.65		15.69				
		2-Wire Voice Grade Port (Centrex 800 termination)			UEP9D	UEPQB	1.13	40.30	19.90	24.98	6.65		15.69				
		2-Wire Voice Grade Port (Centrex / EBS-PSET)3			UEP9D	UEPQC	1.13	40.30	19.90	24.98	6.65		15.69				
		2-Wire Voice Grade Port (Centrex / EBS-M5009)3			UEP9D	UEPQD	1.13	40.30	19.90	24.98	6.65		15.69				
		2-Wire Voice Grade Port (Centrex / EBS-M5209)3			UEP9D	UEPQE	1.13	40.30	19.90	24.98	6.65		15.69				
		2-Wire Voice Grade Port (Centrex / EBS-M5112)3			UEP9D	UEPQF	1.13	40.30	19.90	24.98	6.65		15.69				
		2-Wire Voice Grade Port (Centrex / EBS-M5312)3			UEP9D	UEPQG	1.13	40.30	19.90	24.98	6.65		15.69				
		2-Wire Voice Grade Port (Centrex / EBS-M5008)3			UEP9D	UEPQT	1.13	40.30	19.90	24.98	6.65		15.69				
		2-Wire Voice Grade Port (Centrex / EBS-M5208)3			UEP9D	UEPQU	1.13	40.30	19.90	24.98	6.65		15.69				
		2-Wire Voice Grade Port (Centrex / EBS-M5216)3			UEP9D	UEPQV	1.13	40.30	19.90	24.98	6.65		15.69				
		2-Wire Voice Grade Port (Centrex / EBS-M5316)3			UEP9D	UEPQ3	1.13	40.30	19.90	24.98	6.65		15.69				
		2-Wire Voice Grade Port (Centrex with Caller ID)			UEP9D	UEPQH	1.13	40.30	19.90	24.98	6.65		15.69				
		2-Wire Voice Grade Port (Centrex/Caller ID/Msg Wtg Lamp Indication)3			UEP9D	UEPQW	1.13	40.30	19.90	24.98	6.65		15.69				
		2-Wire Voice Grade Port (Centrex/Msg Wtg Lamp Indication)3			UEP9D	UEPQJ	1.13	40.30	19.90	24.98	6.65		15.69				

UNBUNDLED NETWORK ELEMENTS - South Carolina														Attachment: 2		Exhibit: B	
CATEGORY	RATE ELEMENTS	Interim	Zone	BCS	USOC	RATES ($)					Svc Order Submitted Elec per LSR	Svc Order Submitted Manually per LSR	Incremental Charge - Manual Svc Order vs. Electronic-1st	Incremental Charge - Manual Svc Order vs. Electronic-Add'l	Incremental Charge - Manual Svc Order vs. Electronic-Disc 1st	Incremental Charge - Manual Svc Order vs. Electronic-Disc Add'l
						Rec	Nonrecurring		Nonrecurring Disconnect				OSS Rates($)			
							First	Add'l	First	Add'l	SOMEC	SOMAN	SOMAN	SOMAN	SOMAN	SOMAN
	2-Wire Voice Grade Port (Centrex from diff Serving Wire Center) 2			UEP9D	UEPQM	1.13	108.36	70.71	54.47	11.94		15.69				
	2-Wire Voice Grade Port (Centrex/differ SWC /EBS-PSET)2, 3			UEP9D	UEPQO	1.13	108.36	70.71	54.47	11.94		15.69				
	2-Wire Voice Grade Port (Centrex/differ SWC /EBS-M5009)2, 3			UEP9D	UEPQP	1.13	108.36	70.71	54.47	11.94		15.69				
	2-Wire Voice Grade Port (Centrex/differ SWC /EBS-5209)2, 3			UEP9D	UEPQQ	1.13	108.36	70.71	54.47	11.94		15.69				
	2-Wire Voice Grade Port (Centrex/differ SWC /EBS-M5112)2, 3			UEP9D	UEPQR	1.13	108.36	70.71	54.47	11.94		15.69				
	2-Wire Voice Grade Port (Centrex/differ SWC /EBS-M5312)2, 3			UEP9D	UEPQS	1.13	108.36	70.71	54.47	11.94		15.69				
	2-Wire Voice Grade Port (Centrex/differ SWC /EBS-M5008)2, 3			UEP9D	UEPQ4	1.13	108.36	70.71	54.47	11.94		15.69				
	2-Wire Voice Grade Port (Centrex/differ SWC /EBS-M5208)2, 3			UEP9D	UEPQ5	1.13	108.36	70.71	54.47	11.94		15.69				
	2-Wire Voice Grade Port (Centrex/differ SWC /EBS-M5216)2, 3			UEP9D	UEPQ6	1.13	108.36	70.71	54.47	11.94		15.69				
	2-Wire Voice Grade Port (Centrex/differ SWC /EBS-M5316)2, 3			UEP9D	UEPQ7	1.13	108.36	70.71	54.47	11.94		15.69				
	2-Wire Voice Grade Port, Diff Serving Wire Center - 800 Service Term			UEP9D	UEPQZ	1.13	108.36	70.71	54.47	11.94		15.69				
	2-Wire Voice Grade Port terminated in on Megalink or equivalent			UEP9D	UEPQ9	1.13	40.30	19.90	24.98	6.65		15.69				
	2-Wire Voice Grade Port Terminated on 800 Service Term			UEP9D	UEPQ2	1.13	40.30	19.90	24.98	6.65		15.69				
Local Switching																
	Centrex Intercom Funtionality, per port			UEP9D	URECS	0.7996						15.69				
Local Number Portability																
	Local Number Portability (1 per port)			UEP9D	LNPCC	0.35										
Features																
	All Standard Features Offered, per port			UEP9D	UEPVF	3.04						15.69				
	All Select Features Offered, per port			UEP9D	UEPVS	0.00	406.42					15.69				
	All Centrex Control Features Offered, per port			UEP9D	UEPVC	3.04						15.69				
NARS																
	Unbundled Network Access Register - Combination			UEP9D	UARCX	0.00	0.00	0.00				15.69				
	Unbundled Network Access Register - Inward			UEP9D	UAR1X	0.00	0.00	0.00				15.69				
	Unbundled Network Access Register - Outdial			UEP9D	UAROX	0.00	0.00	0.00				15.69				
Miscellaneous Terminations																
2-Wire Trunk Side																
	Trunk Side Terminations, each			UEP9D	CEND6	8.86	119.57	18.78	60.03	3.77		15.69				
4-Wire Digital (1.544 Megabits)																
	DS1 Circuit Terminations, each			UEP9D	M1HD1	73.62	202.47	95.90	72.75	2.47		15.69				
	DS0 Channels Activiated per Channel			UEP9D	M1HDO	0.00	14.51					15.69				
Interoffice Channel Mileage - 2-Wire																
	Interoffice Channel Facilities Termination			UEP9D	M1GBC	24.30	40.63	27.47	16.77	6.91		15.69				
	Interoffice Channel mileage, per mile or fraction of mile			UEP9D	M1GBM	0.0167										
Feature Activations (DS0) Centrex Loops on Channelized DS1 Service																
D4 Channel Bank Feature Activations																
	Feature Activation on D-4 Channel Bank Centrex Loop Slot			UEP9D	1PQWS	0.56						15.69				
	Feature Activation on D-4 Channel Bank FX line Side Loop Slot			UEP9D	1PQW6	0.56						15.69				
	Feature Activation on D-4 Channel Bank FX Trunk Side Loop Slot			UEP9D	1PQW7	0.56						15.69				
	Feature Activation on D-4 Channel Bank Centrex Loop Slot - Different Wire Center			UEP9D	1PQWP	0.56						15.69				
	Feature Activation on D-4 Channel Bank Private Line Loop Slot			UEP9D	1PQWV	0.56						15.69				
	Feature Activation on D-4 Channel Bank Tjie Line/Trunk Loop Slot			UEP9D	1PQWQ	0.56						15.69				
	Feature Activation on D-4 Channel Bank WATS Loop Slot			UEP9D	1PQWA	0.56						15.69				
Non-Recurring Charges (NRC) Associated with UNE-P Centrex																

UNBUNDLED NETWORK ELEMENTS - South Carolina														Attachment: 2		Exhibit: B	
CATEGORY		RATE ELEMENTS	Interim	Zone	BCS	USOC	RATES ($)					Svc Order Submitted Elec per LSR	Svc Order Submitted Manually per LSR	Incremental Charge - Manual Svc Order vs. Electronic-1st	Incremental Charge - Manual Svc Order vs. Electronic-Add'l	Incremental Charge - Manual Svc Order vs. Electronic-Disc 1st	Incremental Charge - Manual Svc Order vs. Electronic-Disc Add'l
							Rec	Nonrecurring		Nonrecurring Disconnect		OSS Rates($)					
								First	Add'l	First	Add'l	SOMEC	SOMAN	SOMAN	SOMAN	SOMAN	SOMAN
		NRC Conversion Currently Combined Switch-As-Is with allowed changes, per port			UEP9D	USAC2		37.93	16.72				15.69				
		New Centrex Standard Common Block			UEP9D	M1ACS	0.00	668.70					15.69				
		New Centrex Customized Common Block			UEP9D	M1ACC	0.00	668.70					15.69				
		NAR Establishment Charge, Per Occasion			UEP9D	URECA	0.00	72.89					15.69				
	Note 1 - Required Port for Centrex Control in 1AESS, 5ESS & EWSD																
	Note 2 - Requres Interoffice Channel Mileage																
	Note 3 - Requires Specific Customer Premises Equipment																
	Note: Rates displaying an "R" in Interim column are interim and subject to rate true-up as set forth in General Terms and Conditions.																

UNBUNDLED NETWORK ELEMENTS - Tennessee													Attachment: 2		Exhibit: B	
CATEGORY	RATE ELEMENTS	Interim	Zone	BCS	USOC	RATES ($)					Svc Order Submitted Elec per LSR	Svc Order Submitted Manually per LSR	Incremental Charge - Manual Svc Order vs. Electronic-1st	Incremental Charge - Manual Svc Order vs. Electronic-Add'l	Incremental Charge - Manual Svc Order vs. Electronic-Disc 1st	Incremental Charge - Manual Svc Order vs. Electronic-Disc Add'l
						Rec	Nonrecurring		Nonrecurring Disconnect		OSS Rates($)					
							First	Add'l	First	Add'l	SOMEC	SOMAN	SOMAN	SOMAN	SOMAN	SOMAN
	The "Zone" shown in the sections for stand-alone loops or loops as part of a combination refers to Geographically Deaveraged UNE Zones. To view Geographically Deaveraged UNE Zone Designations by Central Office, refer to internet Website: http://www.interconnection.bellsouth.com/become_a_clec/html/interconnection.htm															
OPERATIONAL SUPPORT SYSTEMS																
	NOTE: (1) Electronic Service Order: CLEC should contact its contract negotiator if it prefers the state specific electronic service ordering charges as ordered by the State Commissions. The electronic service ordering charge currently contained in this rate exhibit is the BellSouth regional electronic service ordering charge. CLEC may elect either the state specific Commission ordered rates for the electronic service ordering charges, or CLEC may elect the regional electronic service ordering charge.															
	NOTE: (2) Any element that can be ordered electronically will be billed according to the SOMEC rate listed in this category. Please refer to BellSouth's Business Rules for Local Ordering (BBR-LO) to determine if a product can be ordered electronically. For those elements that cannot be ordered electronically at present per the BBR-LO, the listed SOMEC rate in this category reflects the charge that would be billed to a CLEC once electronic ordering capabilities come on-line for that element. Otherwise, the manual ordering charge, SOMAN, will be applied to a CLECs bill when it submits an LSR to BellSouth.															
	Electronic OSS Charge, per LSR, submitted via BST's OSS interactive interfaces (Regional)				SOMEC		3.50									
UNE SERVICE DATE ADVANCEMENT CHARGE																
	NOTE: The Expedite charge will be maintained commensurate with BellSouth's FCC No.1 Tariff, Section 5 as applicable.															
	UNE Expedite Charge per Circuit or Line Assignable USOC, per Day			UAL, UEANL, UCL, UEF, UDF, UEQ, UDL, UENTW, UDN, UEA, UHL, ULC, USL, U1T12, U1T48, U1TD1, U1TD3, U1TDX, U1TO3, U1TS1, U1TVX, UC1BC, UC1BL, UC1CC, UC1CL, UC1DC, UC1DL, UC1EC, UC1EL, UC1FC, UC1FL, UC1GC, UC1GL, UC1HC, UC1HL, UDL12, UDL48, UDLO3, UDLSX, UE3, ULD12, ULD48, ULDD1, ULDD3, ULDDX, ULDO3, ULDS1, ULDVX, UNC1X, UNC3X, UNCDX, UNCNX, UNCSX, UNCVX, UNLD1, UNLD3, UXTD1, UXTD3, UXTS1, U1TUC, U1TUD, U1TUB, U1TUA	SDASP		200.00									
UNBUNDLED EXCHANGE ACCESS LOOP																
	2-WIRE ANALOG VOICE GRADE LOOP															
	2-Wire Analog Voice Grade Loop - Service Level 1- Zone 1		1	UEANL	UEAL2	13.19	31.99	20.02	10.65	1.41			20.35	10.54	13.32	13.32
	2-Wire Analog Voice Grade Loop - Service Level 1- Zone 2		2	UEANL	UEAL2	17.23	31.99	20.02	10.65	1.41			20.35	10.54	13.32	13.32
	2-Wire Analog Voice Grade Loop - Service Level 1- Zone 3		3	UEANL	UEAL2	22.53	31.99	20.02	10.65	1.41			20.35	10.54	13.32	13.32
	Unbundled Miscellaneous Rate Element, Tag Loop at End User Premise			UEANL	URETL		8.33	0.83					20.35	10.54	13.32	13.32
	Loop Testing - Basic 1st Half Hour			UEANL	URET1		78.92	78.92					20.35	10.54	13.32	13.32
	Loop Testing - Basic Additional Half Hour			UEANL	URETA		23.33	23.33					20.35	10.54	13.32	13.32
	CLEC to CLEC Conversion Charge Without Outside Dispatch (UVL-SL1)			UEANL	UREWO		15.80	8.95					20.35	10.54	13.32	13.32
	Unbundled Voice Loop, Non-Design Voice Loop, billing for BST providing make-up (Engineering Information - E.I.)			UEANL	UEANM		28.80	28.80								
	Manual Order Coordination for UVL-SL1s (per loop)			UEANL	UEAMC		36.52	36.52								
	Order Coordination for Specified Conversion Time for UVL-SL1 (per LSR)			UEANL	OCOSL		34.29	34.29								

UNBUNDLED NETWORK ELEMENTS - Tennessee														Attachment: 2		Exhibit: B	
CATEGORY	RATE ELEMENTS	Interim	Zone	BCS	USOC	RATES ($)					Svc Order Submitted Elec per LSR	Svc Order Submitted Manually per LSR	Incremental Charge - Manual Svc Order vs. Electronic-1st	Incremental Charge - Manual Svc Order vs. Electronic-Add'l	Incremental Charge - Manual Svc Order vs. Electronic-Disc 1st	Incremental Charge - Manual Svc Order vs. Electronic-Disc Add'l
						Rec	Nonrecurring		Nonrecurring Disconnect		OSS Rates($)					
							First	Add'l	First	Add'l	SOMEC	SOMAN	SOMAN	SOMAN	SOMAN	SOMAN
2-WIRE Unbundled COPPER LOOP																
	2-Wire Unbundled Copper Loop - Non-Designed Zone 1	I	1	UEQ	UEQ2X	13.19	31.99	20.02	10.65	1.41			20.35	10.54	13.32	13.32
	2 Wire Unbundled Copper Loop - Non-Designed - Zone 2	I	2	UEQ	UEQ2X	17.23	31.99	20.02	10.65	1.41			20.35	10.54	13.32	13.32
	2 Wire Unbundled Copper Loop - Non-Designed - Zone 3	I	3	UEQ	UEQ2X	22.53	31.99	20.02	10.65	1.41			20.35	10.54	13.32	13.32
	Unbundled Miscellaneous Rate Element, Tag Loop at End User Premise			UEQ	URETL		8.33	0.83					20.35	10.54	13.32	13.32
	Order Coordination 2 Wire Unbundled Copper Loop - Non-Designed (per loop)			UEQ	USBMC		36.52	36.52								
	Unbundled Copper Loop, Non-Design Copper Loop, billing for BST providing make-up (Engineering Information - E.I.)			UEQ	UEQMU		28.80	28.80					20.35	10.54	13.32	13.32
	Loop Testing - Basic 1st Half Hour			UEQ	URET1		78.92	78.92					20.35	10.54	13.32	13.32
	Loop Testing - Basic Additional Half Hour			UEQ	URETA		23.33	23.33					20.35	10.54	13.32	13.32
	CLEC to CLEC Conversion Charge Without Outside Dispatch (UCL-ND)			UEQ	UREWO		14.29	7.44					20.35	10.54	13.32	13.32
UNBUNDLED EXCHANGE ACCESS LOOP																
2-WIRE ANALOG VOICE GRADE LOOP																
	2 Wire Analog Voice Grade Loop-Service Level 1-Line Splitting-Zone 1		1	UEPSR UEPSB	UEALS	13.19	31.99	20.02	10.65	1.41			20.35	10.54	13.32	13.32
	2 Wire Analog Voice Grade Loop-Service Level 1-Line Splitting-Zone 1		1	UEPSR UEPSB	UEABS	13.19	31.99	20.02	10.65	1.41			20.35	10.54	13.32	13.32
	2 Wire Analog Voice Grade Loop- Service Level 1-Line Splitting-Zone 2		2	UEPSR UEPSB	UEALS	17.23	31.99	20.02	10.65	1.41			20.35	10.54	13.32	13.32
	2 Wire Analog Voice Grade Loop- Service Level 1-Line Splitting-Zone 2		2	UEPSR UEPSB	UEABS	17.23	31.99	20.02	10.65	1.41			20.35	10.54	13.32	13.32
	2 Wire Analog Voice Grade Loop-Service Level 1-Line Splitting-Zone 3		3	UEPSR UEPSB	UEALS	22.53	31.99	20.02	10.65	1.41			20.35	10.54	13.32	13.32
	2 Wire Analog Voice Grade Loop-Service Level 1-Line Splitting-Zone 3		3	UEPSR UEPSB	UEABS	22.53	31.99	20.02	10.65	1.41			20.35	10.54	13.32	13.32
UNBUNDLED EXCHANGE ACCESS LOOP																
2-WIRE ANALOG VOICE GRADE LOOP																
	2-Wire Analog Voice Grade Loop - Service Level 2 w/Loop or Ground Start Signaling - Zone 1		1	UEA	UEAL2	16.56	75.06	48.20	28.70	17.64			20.35	10.54	13.32	13.32
	2-Wire Analog Voice Grade Loop - Service Level 2 w/Loop or Ground Start Signaling - Zone 2		2	UEA	UEAL2	21.63	75.06	48.20	28.70	17.64			20.35	10.54	13.32	13.32
	2-Wire Analog Voice Grade Loop - Service Level 2 w/Loop or Ground Start Signaling - Zone 3		3	UEA	UEAL2	28.28	75.06	48.20	28.70	17.64			20.35	10.54	13.32	13.32
	Order Coordination for Specified Conversion Time (per LSR)			UEA	OCOSL		34.29									
	2-Wire Analog Voice Grade Loop - Service Level 2 w/Reverse Battery Signaling - Zone 1		1	UEA	UEAR2	16.56	75.06	48.20	28.70	17.64			20.35	10.54	13.32	13.32
	2-Wire Analog Voice Grade Loop - Service Level 2 w/Reverse Battery Signaling - Zone 2		2	UEA	UEAR2	21.63	75.06	48.20	28.70	17.64			20.35	10.54	13.32	13.32
	2-Wire Analog Voice Grade Loop - Service Level 2 w/Reverse Battery Signaling - Zone 3		3	UEA	UEAR2	28.28	75.06	48.20	28.70	17.64			20.35	10.54	13.32	13.32
	Order Coordination for Specified Conversion Time (per LSR)			UEA	OCOSL		34.29									
	CLEC to CLEC Conversion Charge without outside dispatch			UEA	UREWO		75.06	36.41					20.35	10.54	13.32	13.32
	Loop Tagging - Service Level 2 (SL2)			UEA	URETL		11.23	1.10					20.35	10.54	13.32	13.32
4-WIRE ANALOG VOICE GRADE LOOP																
	4-Wire Analog Voice Grade Loop - Zone 1		1	UEA	UEAL4	24.70	122.76	85.57	76.35	39.16			20.35	10.54	13.32	13.32
	4-Wire Analog Voice Grade Loop - Zone 2		2	UEA	UEAL4	32.25	122.76	85.57	76.35	39.16			20.35	10.54	13.32	13.32
	4-Wire Analog Voice Grade Loop - Zone 3		3	UEA	UEAL4	42.17	122.76	85.57	76.35	39.16			20.35	10.54	13.32	13.32
	Order Coordination for Specified Conversion Time (per LSR)			UEA	OCOSL		34.29									
	CLEC to CLEC Conversion Charge without outside dispatch			UEA	UREWO		75.06	36.41					20.35	10.54	13.32	13.32
2-WIRE ISDN DIGITAL GRADE LOOP																
	2-Wire ISDN Digital Grade Loop - Zone 1		1	UDN	U1L2X	22.22	142.76	88.88	76.35	39.16			20.35	10.54	13.32	13.32
	2-Wire ISDN Digital Grade Loop - Zone 2		2	UDN	U1L2X	29.02	142.76	88.88	76.35	39.16			20.35	10.54	13.32	13.32
	2-Wire ISDN Digital Grade Loop - Zone 3		3	UDN	U1L2X	37.95	142.76	88.88	76.35	39.16			20.35	10.54	13.32	13.32
	Order Coordination For Specified Conversion Time (per LSR)			UDN	OCOSL		34.29									
	CLEC to CLEC Conversion Charge without outside dispatch			UDN	UREWO		91.77	44.22					20.35	10.54	13.32	13.32
2-WIRE Universal Digital Channel (UDC) COMPATIBLE LOOP																

CATEGORY	RATE ELEMENTS	Interim	Zone	BCS	USOC	RATES ($)					Svc Order Submitted Elec per LSR	Svc Order Submitted Manually per LSR	Attachment: 2 Incremental Charge - Manual Svc Order vs. Electronic-1st	Attachment: 2 Incremental Charge - Manual Svc Order vs. Electronic-Add'l	Exhibit: B Incremental Charge - Manual Svc Order vs. Electronic-Disc 1st	Exhibit: B Incremental Charge - Manual Svc Order vs. Electronic-Disc Add'l
						Rec	Nonrecurring		Nonrecurring Disconnect		OSS Rates($)					
							First	Add'l	First	Add'l	SOMEC	SOMAN	SOMAN	SOMAN	SOMAN	SOMAN
	2-Wire Universal Digital Channel (UDC) Compatible Loop - Zone 1		1	UDC	UDC2X	22.22	142.76	88.88	76.35	39.16			20.35	10.54	13.32	13.32
	2-Wire Universal Digital Channel (UDC) Compatible Loop - Zone 2		2	UDC	UDC2X	29.02	142.76	88.88	76.35	39.16			20.35	10.54	13.32	13.32
	2-Wire Universal Digital Channel (UDC) Compatible Loop - Zone 3		3	UDC	UDC2X	37.95	142.76	88.88	76.35	39.16			20.35	10.54	13.32	13.32
	CLEC to CLEC Conversion Charge without outside dispatch			UDC	UREWO		91.77	44.22					20.35	10.54	13.32	13.32
2-WIRE ASYMMETRICAL DIGITAL SUBSCRIBER LINE (ADSL) COMPATIBLE LOOP																
	2 Wire Unbundled ADSL Loop including manual service inquiry & facility reservation - Zone 1		1	UAL	UAL2X	13.82	270.01	234.63	74.54	39.14			20.35	10.54	13.32	13.32
	2 Wire Unbundled ADSL Loop including manual service inquiry & facility reservation - Zone 2		2	UAL	UAL2X	18.05	270.01	234.63	74.54	39.14			20.35	10.54	13.32	13.32
	2 Wire Unbundled ADSL Loop including manual service inquiry & facility reservation - Zone 3		3	UAL	UAL2X	23.60	270.01	234.63	74.54	39.14			20.35	10.54	13.32	13.32
	Order Coordination for Specified Conversion Time (per LSR)			UAL	OCOSL		34.29									
	2 Wire Unbundled ADSL Loop without manual service inquiry & facility reservaton - Zone 1	I	1	UAL	UAL2W	13.82	31.99	20.02	10.65	1.41			20.35	10.54	13.32	13.32
	2 Wire Unbundled ADSL Loop without manual service inquiry & facility reservaton - Zone 2	I	2	UAL	UAL2W	18.05	31.99	20.02	10.65	1.41			20.35	10.54	13.32	13.32
	2 Wire Unbundled ADSL Loop without manual service inquiry & facility reservaton - Zone 3	I	3	UAL	UAL2W	23.60	31.99	20.02	10.65	1.41			20.35	10.54	13.32	13.32
	Order Coordination for Specified Conversion Time (per LSR)			UAL	OCOSL		34.29									
	CLEC to CLEC Conversion Charge without outside dispatch	I		UAL	UREWO		31.99	20.02					20.35	10.54	13.32	13.32
2-WIRE HIGH BIT RATE DIGITAL SUBSCRIBER LINE (HDSL) COMPATIBLE LOOP																
	2 Wire Unbundled HDSL Loop including manual service inquiry & facility reservation - Zone 1		1	UHL	UHL2X	10.83	270.01	234.63	74.54	39.14			20.35	10.54	13.32	13.32
	2 Wire Unbundled HDSL Loop including manual service inquiry & facility reservation - Zone 2		2	UHL	UHL2X	14.15	270.01	234.63	74.54	39.14			20.35	10.54	13.32	13.32
	2 Wire Unbundled HDSL Loop including manual service inquiry & facility reservation - Zone 3		3	UHL	UHL2X	18.50	270.01	234.63	74.54	39.14			20.35	10.54	13.32	13.32
	Order Coordination for Specified Conversion Time (per LSR)			UHL	OCOSL		34.29									
	2 Wire Unbundled HDSL Loop without manual service inquiry and facility reservation - Zone 1	I	1	UHL	UHL2W	10.83	31.99	20.02	10.65	1.41			20.35	10.54	13.32	13.32
	2 Wire Unbundled HDSL Loop without manual service inquiry and facility reservation - Zone 2	I	2	UHL	UHL2W	14.15	31.99	20.02	10.65	1.41			20.35	10.54	13.32	13.32
	2 Wire Unbundled HDSL Loop without manual service inquiry and facility reservation - Zone 3	I	3	UHL	UHL2W	18.50	31.99	20.02	10.65	1.41			20.35	10.54	13.32	13.32
	Order Coordination for Specified Conversion Time (per LSR)			UHL	OCOSL		34.29									
	CLEC to CLEC Conversion Charge without outside dispatch	I		UHL	UREWO		31.99	20.02					20.35	10.54	13.32	13.32
4-WIRE HIGH BIT RATE DIGITAL SUBSCRIBER LINE (HDSL) COMPATIBLE LOOP																
	4 Wire Unbundled HDSL Loop including manual service inquiry and facility reservation - Zone 1		1	UHL	UHL4X	13.93	279.60	244.22	74.54	39.14			20.35	10.54	13.32	13.32
	4-Wire Unbundled HDSL Loop including manual service inquiry and facility reservation - Zone 2		2	UHL	UHL4X	18.20	279.60	244.22	74.54	39.14			20.35	10.54	13.32	13.32
	4-Wire Unbundled HDSL Loop including manual service inquiry and facility reservation - Zone 3		3	UHL	UHL4X	23.80	279.60	244.22	74.54	39.14			20.35	10.54	13.32	13.32
	Order Coordination for Specified Conversion Time (per LSR)			UHL	OCOSL		34.29									
	4-Wire Unbundled HDSL Loop without manual service inquiry and facility reservation - Zone 1	I	1	UHL	UHL4W	13.93	31.99	20.02	10.65	1.41			20.35	10.54	13.32	13.32
	4-Wire Unbundled HDSL Loop without manual service inquiry and facility reservation - Zone 2	I	2	UHL	UHL4W	18.20	31.99	20.02	10.65	1.41			20.35	10.54	13.32	13.32
	4-Wire Unbundled HDSL Loop without manual service inquiry and facility reservation - Zone 3	I	3	UHL	UHL4W	23.80	31.99	20.02	10.65	1.41			20.35	10.54	13.32	13.32
	Order Coordination for Specified Conversion Time (per LSR)			UHL	OCOSL		34.29									
	CLEC to CLEC Conversion Charge without outside dispatch	I		UHL	UREWO		31.99	20.02					20.35	10.54	13.32	13.32
4-WIRE DS1 DIGITAL LOOP																
	4-Wire DS1 Digital Loop - Zone 1		1	USL	USLXX	57.73	313.08	219.72	96.86	40.45			18.98	8.43	11.95	11.95
	4-Wire DS1 Digital Loop - Zone 2		2	USL	USLXX	75.40	313.08	219.72	96.86	40.45			18.98	8.43	11.95	11.95
	4-Wire DS1 Digital Loop - Zone 3		3	USL	USLXX	98.59	313.08	219.72	96.86	40.45			18.98	8.43	11.95	11.95

CATEGORY	RATE ELEMENTS	Interim	Zone	BCS	USOC	RATES ($) Rec	Nonrecurring First	Nonrecurring Add'l	Nonrecurring Disconnect First	Nonrecurring Disconnect Add'l	Svc Order Submitted Elec per LSR	Svc Order Submitted Manually per LSR	Attachment: 2 Incremental Charge - Manual Svc Order vs. Electronic-1st	Attachment: 2 Incremental Charge - Manual Svc Order vs. Electronic-Add'l	Exhibit: B Incremental Charge - Manual Svc Order vs. Electronic-Disc 1st	Exhibit: B Incremental Charge - Manual Svc Order vs. Electronic-Disc Add'l
											OSS Rates($)					
							First	Add'l	First	Add'l	SOMEC	SOMAN	SOMAN	SOMAN	SOMAN	SOMAN
	Order Coordination for Specified Conversion Time (per LSR)			USL	OCOSL		34.59									
	CLEC to CLEC Conversion Charge without outside dispatch			USL	UREWO		130.47	40.11					20.35	10.54	13.32	13.32
4-WIRE 19.2, 56 OR 64 KBPS DIGITAL GRADE LOOP																
	4 Wire Unbundled Digital 19.2 Kbps		1	UDL	UDL19	31.10	207.01	141.38	90.70	44.18			20.35	10.54	13.32	13.32
	4 Wire Unbundled Digital 19.2 Kbps		2	UDL	UDL19	40.61	207.01	141.38	90.70	44.18			20.35	10.54	13.32	13.32
	4 Wire Unbundled Digital 19.2 Kbps		3	UDL	UDL19	53.11	207.01	141.38	90.70	44.18			20.35	10.54	13.32	13.32
	4 Wire Unbundled Digital Loop 56 Kbps - Zone 1		1	UDL	UDL56	31.10	207.01	141.38	90.70	44.18			20.35	10.54	13.32	13.32
	4 Wire Unbundled Digital Loop 56 Kbps - Zone 2		2	UDL	UDL56	40.61	207.01	141.38	90.70	44.18			20.35	10.54	13.32	13.32
	4 Wire Unbundled Digital Loop 56 Kbps - Zone 3		3	UDL	UDL56	53.11	207.01	141.38	90.70	44.18			20.35	10.54	13.32	13.32
	Order Coordination for Specified Conversion Time (per LSR)			UDL	OCOSL		34.29									
	4 Wire Unbundled Digital Loop 64 Kbps - Zone 1		1	UDL	UDL64	31.10	207.01	141.38	90.70	44.18			20.35	10.54	13.32	13.32
	4 Wire Unbundled Digital Loop 64 Kbps - Zone 2		2	UDL	UDL64	40.61	207.01	141.38	90.70	44.18			20.35	10.54	13.32	13.32
	4 Wire Unbundled Digital Loop 64 Kbps - Zone 3		3	UDL	UDL64	53.11	207.01	141.38	90.70	44.18			20.35	10.54	13.32	13.32
	Order Coordination for Specified Conversion Time (per LSR)			UDL	OCOSL		34.29									
	CLEC to CLEC Conversion Charge without outside dispatch			UDL	UREWO		102.28	49.82					20.35	10.54	13.32	13.32
2-WIRE Unbundled COPPER LOOP																
	2-Wire Unbundled Copper Loop/Short including manual service inquiry & facility reservation - Zone 1	I	1	UCL	UCLPB	13.19	31.99	20.02	10.65	1.41			20.35	10.54	13.32	13.32
	2-Wire Unbundled Copper Loop/Short including manual service inquiry & facility reservation - Zone 2	I	2	UCL	UCLPB	17.23	31.99	20.02	10.65	1.41			20.35	10.54	13.32	13.32
	2 Wire Unbundled Copper Loop/Short including manual service inquiry & facility reservation - Zone 3	I	3	UCL	UCLPB	22.53	31.99	20.02	10.65	1.41			20.35	10.54	13.32	13.32
	Order Coordination for Unbundled Copper Loops (per loop)			UCL	UCLMC		36.52	36.52								
	2-Wire Unbundled Copper Loop/Short without manual service inquiry and facility reservation - Zone 1	I	1	UCL	UCLPW	13.19	31.99	20.02	10.65	1.41			20.35	10.54	13.32	13.32
	2-Wire Unbundled Copper Loop/Short without manual service inquiry and facility reservation - Zone 2	I	2	UCL	UCLPW	17.23	31.99	20.02	10.65	1.41			20.35	10.54	13.32	13.32
	2-Wire Unbundled Copper Loop/Short without manual service inquiry and facility reservation - Zone 3	I	3	UCL	UCLPW	22.53	31.99	20.02	10.65	1.41			20.35	10.54	13.32	13.32
	Order Coordination for Unbundled Copper Loops (per loop)			UCL	UCLMC		36.52	36.52								
	2-Wire Unbundled Copper Loop/Long - includes manual srvc. inquiry and facility reservation - Zone 1	I	1	UCL	UCL2L	13.19	31.99	20.02	10.65	1.41			20.35	10.54	13.32	13.32
	2-Wire Unbundled Copper Loop/Long - includes manual svc. inquiry and facility reservation - Zone 2	I	2	UCL	UCL2L	17.23	31.99	20.02	10.65	1.41			20.35	10.54	13.32	13.32
	2-Wire Unbundled Copper Loop/Long - includes manual svc. inquiry and facility reservation - Zone 3	I	3	UCL	UCL2L	22.53	31.99	20.02	10.65	1.41			20.35	10.54	13.32	13.32
	Order Coordination for Unbundled Copper Loops (per loop)			UCL	UCLMC		36.52	36.52								
	2-Wire Unbundled Copper Loop/Long - without manual service inquiry and facility reservation - Zone 1	I	1	UCL	UCL2W	13.19	31.99	20.02	10.65	1.41			20.35	10.54	13.32	13.32
	2-Wire Unbundled Copper Loop/Long - without manual service inquiry and facility reservation - Zone 2	I	2	UCL	UCL2W	17.23	31.99	20.02	10.65	1.41			20.35	10.54	13.32	13.32
	2-Wire Unbundled Copper Loop/Long - without manual service inquiry and facility reservation - Zone 3	I	3	UCL	UCL2W	22.53	31.99	20.02	10.65	1.41			20.35	10.54	13.32	13.32
	Order Coordination for Unbundled Copper Loops (per loop)			UCL	UCLMC		36.52	36.52								
	CLEC to CLEC Conversion Charge without outside dispatch (UCL-Des)	I		UCL	UREWO		31.99	20.02					20.35	10.54	13.32	13.32
4-WIRE COPPER LOOP																
	4-Wire Copper Loop/Short - including manual service inquiry and facility reservation - Zone 1	I	1	UCL	UCL4S	24.70	122.76	85.57	76.35	39.16			20.35	10.54	13.32	13.32
	4-Wire Copper Loop/Short - including manual service inquiry and facility reservation - Zone 2	I	2	UCL	UCL4S	32.25	122.76	85.57	76.35	39.16			20.35	10.54	13.32	13.32
	4-Wire Copper Loop/Short - including manual service inquiry and facility reservation - Zone 3	I	3	UCL	UCL4S	42.17	122.76	85.57	76.35	39.16			20.35	10.54	13.32	13.32
	Order Coordination for Unbundled Copper Loops (per loop)			UCL	UCLMC		36.52	36.52								
	4-Wire Copper Loop/Short - without manual service inquiry and facility reservation - Zone 1	I	1	UCL	UCL4W	24.70	122.76	85.57	76.35	39.16			20.35	10.54	13.32	13.32
	4-Wire Copper Loop/Short - without manual service inquiry and facility reservation - Zone 2	I	2	UCL	UCL4W	32.25	122.76	85.57	76.35	39.16			20.35	10.54	13.32	13.32

UNBUNDLED NETWORK ELEMENTS - Tennessee														Attachment: 2		Exhibit: B	
CATEGORY		RATE ELEMENTS	Interim	Zone	BCS	USOC	RATES ($)					Svc Order Submitted Elec per LSR	Svc Order Submitted Manually per LSR	Incremental Charge - Manual Svc Order vs. Electronic-1st	Incremental Charge - Manual Svc Order vs. Electronic-Add'l	Incremental Charge - Manual Svc Order vs. Electronic-Disc 1st	Incremental Charge - Manual Svc Order vs. Electronic-Disc Add'l
							Rec	Nonrecurring		Nonrecurring Disconnect		OSS Rates($)					
								First	Add'l	First	Add'l	SOMEC	SOMAN	SOMAN	SOMAN	SOMAN	SOMAN
		4-Wire Copper Loop/Short - without manual service inquiry and facility reservation - Zone 3	I	3	UCL	UCL4W	42.17	122.76	85.57	76.35	39.16			20.35	10.54	13.32	13.32
		Order Coordination for Unbundled Copper Loops (per loop)			UCL	UCLMC		36.52	36.52								
		4-Wire Unbundled Copper Loop/Long - includes manual svc. inquiry and facility reservation - Zone 1	I	1	UCL	UCL4L	24.70	122.76	85.57	76.35	39.16			20.35	10.54	13.32	13.32
		4-Wire Unbundled Copper Loop/Long - includes manual svc. inquiry and facility reservation - Zone 2	I	2	UCL	UCL4L	32.25	122.76	85.57	76.35	39.16			20.35	10.54	13.32	13.32
		4-Wire Unbundled Copper Loop/Long - includes manual svc. inquiry and facility reservation - Zone 3	I	3	UCL	UCL4L	42.17	122.76	85.57	76.35	39.16			20.35	10.54	13.32	13.32
		Order Coordination for Unbundled Copper Loops (per loop)			UCL	UCLMC		36.52	36.52								
		4-Wire Unbundled Copper Loop/Long - without manual svc. inquiry and facility reservation - Zone 1	I	1	UCL	UCL4O	24.70	122.76	85.57	76.35	39.16			20.35	10.54	13.32	13.32
		4-Wire Unbundled Copper Loop/Long - without manual svc. inquiry and facility reservation - Zone 2	I	2	UCL	UCL4O	32.25	122.76	85.57	76.35	39.16			20.35	10.54	13.32	13.32
		4-Wire Unbundled Copper Loop/Long - without manual svc. inquiry and facility reservation - Zone 3	I	3	UCL	UCL4O	42.17	122.76	85.57	76.35	39.16			20.35	10.54	13.32	13.32
		Order Coordination for Unbundled Copper Loops (per loop)			UCL	UCLMC		36.52	36.52								
		CLEC to CLEC Conversion Charge without outside dispatch (UCL-Des)	I		UCL	UREWO		31.99	20.02					20.35	10.54	13.32	13.32
LOOP MODIFICATION																	
		Unbundled Loop Modification, Removal of Load Coils - 2 Wire pair less than or equal to 18k ft	I		UAL, UHL, UCL, UEQ, ULS, UEA, UEANL, UEPSR, UEPSB	ULM2L		65.40	65.40					20.35	10.54	13.32	13.32
		Unbundled Loop Modification, Removal of Load Coils - 2 wire greater than 18k ft	I		UCL, ULS, UEQ	ULM2G		710.71	23.77					20.35	10.54	13.32	13.32
		Unbundled Loop Modification Removal of Load Coils - 4 Wire less than or equal to 18K ft	I		UHL, UCL, UEA	ULM4L		65.40	65.40					20.35	10.54	13.32	13.32
		Unbundled Loop Modification Removal of Load Coils - 4 Wire pair greater than 18k ft	I		UCL	ULM4G		710.71	23.77					20.35	10.54	13.32	13.32
		Unbundled Loop Modification Removal of Bridged Tap Removal, per unbundled loop	I		UAL, UHL, UCL, UEQ, ULS, UEA, UEANL, UEPSR, UEPSB	ULMBT		65.44	65.44					20.35	10.54	13.32	13.32
SUB-LOOPS																	
	Sub-Loop Distribution																
		Sub-Loop - Per Cross Box Location - CLEC Feeder Facility Set-Up	I		UEANL	USBSA		517.25	517.25					20.35	10.54	13.32	13.32
		Sub-Loop - Per Cross Box Location - Per 25 Pair Panel Set-Up	I		UEANL	USBSB		42.68	42.68					20.35	10.54	13.32	13.32
		Sub-Loop - Per Building Equipment Room - CLEC Feeder Facility Set-Up	I		UEANL	USBSC		313.01	313.01					20.35	10.54	13.32	13.32
		Sub-Loop - Per Building Equipment Room - Per 25 Pair Panel Set-Up	I		UEANL	USBSD		108.06	108.06					20.35	10.54	13.32	13.32
		Sub-Loop Distribution Per 2-Wire Analog Voice Grade Loop - Statewide		sw	UEANL	USBN2	10.02	148.84	112.34	73.14	36.65			20.35	10.54	13.32	13.32
		Order Coordination for Unbundled Sub-Loops, per sub-loop pair			UEANL	USBMC		34.29	34.29								
		Sub-Loop Distribution Per 4-Wire Analog Voice Grade Loop - Zone 1		1	UEANL	USBN4	7.30	147.93	75.11	99.96	16.98			20.35	10.54	13.32	13.32
		Sub-Loop Distribution Per 4-Wire Analog Voice Grade Loop - Zone 2		2	UEANL	USBN4	9.54	147.93	75.11	99.96	16.98			20.35	10.54	13.32	13.32
		Sub-Loop Distribution Per 4-Wire Analog Voice Grade Loop - Zone 3		3	UEANL	USBN4	12.47	147.93	75.11	99.96	16.98			20.35	10.54	13.32	13.32
		Order Coordination for Unbundled Sub-Loops, per sub-loop pair			UEANL	USBMC		34.29	34.29								
		Sub-Loop 2-Wire Intrabuilding Network Cable (INC)	I		UEANL	USBR2	1.35	94.56	29.35					20.35	10.54	13.32	13.32
		Order Coordination for Unbundled Sub-Loops, per sub-loop pair			UEANL	USBMC		34.29	34.29								

UNBUNDLED NETWORK ELEMENTS - Tennessee														Attachment: 2		Exhibit: B	
CATEGORY		RATE ELEMENTS	Interim	Zone	BCS	USOC	RATES ($)					Svc Order Submitted Elec per LSR	Svc Order Submitted Manually per LSR	Incremental Charge - Manual Svc Order vs. Electronic-1st	Incremental Charge - Manual Svc Order vs. Electronic-Add'l	Incremental Charge - Manual Svc Order vs. Electronic-Disc 1st	Incremental Charge - Manual Svc Order vs. Electronic-Disc Add'l
							Rec	Nonrecurring		Nonrecurring Disconnect		OSS Rates($)					
								First	Add'l	First	Add'l	SOMEC	SOMAN	SOMAN	SOMAN	SOMAN	SOMAN
		Sub-Loop 4-Wire Intrabuilding Network Cable (INC)	I		UEANL	USBR4	2.26	116.14	37.10					20.35	10.54	13.32	13.32
		Order Coordination for Unbundled Sub-Loops, per sub-loop pair			UEANL	USBMC		34.29	34.29								
		2 Wire Copper Unbundled Sub-Loop Distribution - Zone 1	I	1	UEF	UCS2X	5.16	110.71	37.89	94.41	13.09			20.35	10.54	13.32	13.32
		2 Wire Copper Unbundled Sub-Loop Distribution - Zone 2	I	2	UEF	UCS2X	6.74	110.71	37.89	94.41	13.09			20.35	10.54	13.32	13.32
		2 Wire Copper Unbundled Sub-Loop Distribution - Zone 3	I	3	UEF	UCS2X	8.81	110.71	37.89	94.41	13.09			20.35	10.54	13.32	13.32
		Order Coordination for Unbundled Sub-Loops, per sub-loop pair			UEF	USBMC		34.29	34.29								
		4 Wire Copper Unbundled Sub-Loop Distribution - Zone 1	I	1	UEF	UCS4X	6.52	117.12	44.30	99.96	16.98			20.35	10.54	13.32	13.32
		4 Wire Copper Unbundled Sub-Loop Distribution - Zone 2	I	2	UEF	UCS4X	8.52	117.12	44.30	99.96	16.98			20.35	10.54	13.32	13.32
		4 Wire Copper Unbundled Sub-Loop Distribution - Zone 3	I	3	UEF	UCS4X	11.14	117.12	44.30	99.96	16.98			20.35	10.54	13.32	13.32
		Order Coordination for Unbundled Sub-Loops, per sub-loop pair			UEF	USBMC		34.29	34.29								
	Unbundled Network Terminating Wire (UNTW)																
		Unbundled Network Terminating Wire (UNTW) per Pair	I		UENTW	UENPP	0.4555	2.48	2.48					20.35	10.54	13.32	13.32
	Network Interface Device (NID)																
		Network Interface Device (NID) - 1-2 lines			UENTW	UND12		89.69	54.56	0.6391	0.6391			20.35	10.54	13.32	13.32
		Network Interface Device (NID) - 1-6 lines			UENTW	UND16		129.65	94.51	0.6522	0.6522			20.35	10.54	13.32	13.32
		Network Interface Device Cross Connect - 2 W			UENTW	UNDC2		11.11	11.11					20.35	10.54	13.32	13.32
		Network Interface Device Cross Connect - 4W			UENTW	UNDC4		11.11	11.11					20.35	10.54	13.32	13.32
SUB-LOOPS																	
	Sub-Loop Feeder																
		USL-Feeder, DS0 Set-up per Cross Box location - CLEC Distribution Facility set-up			UEA, UDN,UCL,UDL,UDC	USBFW		517.25						20.35	10.54	13.32	13.32
		USL Feeder - DS0 Set-up per Cross Box location - per 25 pair set-up			UEA, UDN,UCL,UDL,UDC	USBFX		42.68	42.68					20.35	10.54	13.32	13.32
		USL Feeder DS1 Set-up at DSX location, per DS1 termination			USL	USBFZ		531.04	11.34					20.35	10.54	13.32	13.32
		Unbundled Sub-Loop Feeder Loop, 2 Wire Ground-Start, Voice Grade- Statewide		sw	UEA	USBFA	12.05	122.24	85.05	76.35	39.16			20.35	10.54	13.32	13.32
		Order Coordination for Specified Conversion Time, per LSR			UEA	OCOSL		34.29									
		Unbundled Sub-Loop Feeder Loop, 2 Wire Loop-Start, Voice Grade - Statewide		sw	UEA	USBFB	12.05	122.24	85.05	76.35	39.16			20.35	10.54	13.32	13.32
		Order Coordination for Specified Time Conversion, per LSR			UEA	OCOSL		34.29									
		Unbundled Sub-Loop Feeder Loop, 2 Wire Reverse Battery, Voice Grade Loop - Statewide		sw	UEA	USBFC	12.05	122.24	85.05	76.35	39.16			20.35	10.54	13.32	13.32
		Order Coordination For Specified Conversion Time, per LSR			UEA	OCOSL		34.29									
		Unbundled Sub-Loop Feeder Loop, 4 Wire Ground-Start, Voice Grade - Zone 1		1	UEA	USBFD	21.52	137.31	61.93	118.04	30.13			20.35	10.54	13.32	13.32
		Unbundled Sub-Loop Feeder Loop, 4 Wire Ground-Start, Voice Grade - Zone 2		2	UEA	USBFD	28.11	137.31	61.93	118.04	30.13			20.35	10.54	13.32	13.32
		Unbundled Sub-Loop Feeder Loop, 4 Wire Ground Start, Voice Grade - Zone 3		3	UEA	USBFD	36.76	137.31	61.93	118.04	30.13			20.35	10.54	13.32	13.32
		Order Coordination For Specified Conversion Time, Per LSR			UEA	OCOSL		34.29									
		Unbundled Sub-Loop Feeder Loop, 4 Wire Loop-Start, Voice Grade - Zone 1		1	UEA	USBFE	21.52	137.31	61.93	118.04	30.13			20.35	10.54	13.32	13.32
		Unbundled Sub-Loop Feeder Loop, 4 Wire Loop-Start, Voice Grade - Zone 2		2	UEA	USBFE	28.11	137.31	61.93	118.04	30.13			20.35	10.54	13.32	13.32
		Unbundled Sub-Loop Feeder Loop, 4 Wire Loop-Start, Voice Grade - Zone 3		3	UEA	USBFE	36.76	137.31	61.93	118.04	30.13			20.35	10.54	13.32	13.32
		Order Coordination For Specified Conversion Time, Per LSR			UEA	OCOSL		34.29									
		Unbundled Sub-Loop Feeder Loop, 2 Wire ISDN BRI - Zone 1		1	UDN	USBFF	16.11	142.83	67.45	104.67	18.53			19.99	19.99	19.99	19.99
		Unbundled Sub-Loop Feeder Loop, 2-Wire ISDN BRI - Zone 2		2	UDN	USBFF	21.04	142.83	67.45	104.67	18.53			19.99	19.99	19.99	19.99
		Unbundled Sub-Loop Feeder Loop, 2-Wire ISDN BRI - Zone 3		3	UDN	USBFF	27.51	142.83	67.45	104.64	18.53			19.99	19.99	19.99	19.99
		Order Coordination For Specified Conversion Time, Per LSR			UDN	OCOSL		34.29									
		Unbundled Sub-Loop Feeder, 2 Wire UDC (IDSL compatible)		1	UDC	USBFS	16.11	142.83	67.45	104.67	18.53			19.99	19.99	19.99	19.99
		Unbundled Sub-Loop Feeder, 2 Wire UDC (IDSL compatible)		2	UDC	USBFS	21.04	142.83	67.45	104.67	18.53			19.99	19.99	19.99	19.99
		Unbundled Sub-Loop Feeder, 2 Wire UDC (IDSL compatible)		3	UDC	USBFS	27.51	142.83	67.45	104.64	18.53			19.99	19.99	19.99	19.99
		Unbundled Sub-Loop Feeder Loop, 4-Wire DS1 - Zone 1		1	USL	USBFG	39.74	116.00	40.62	106.82	18.91			19.99	19.99	19.99	19.99
		Unbundled Sub-Loop Feeder Loop, 4-Wire DS1 - Zone 2		2	USL	USBFG	51.90	116.00	40.62	106.82	18.91			19.99	19.99	19.99	19.99

CATEGORY	RATE ELEMENTS	Interim	Zone	BCS	USOC	RATES ($)					Svc Order Submitted Elec per LSR	Svc Order Submitted Manually per LSR	Attachment: 2 Incremental Charge - Manual Svc Order vs. Electronic-1st	Attachment: 2 Incremental Charge - Manual Svc Order vs. Electronic-Add'l	Exhibit: B Incremental Charge - Manual Svc Order vs. Electronic-Disc 1st	Exhibit: B Incremental Charge - Manual Svc Order vs. Electronic-Disc Add'l
						Rec	Nonrecurring		Nonrecurring Disconnect		OSS Rates($)					
							First	Add'l	First	Add'l	SOMEC	SOMAN	SOMAN	SOMAN	SOMAN	SOMAN
	Unbundled Sub-Loop Feeder Loop, 4-Wire DS1 - Zone 3		3	USL	USBFG	67.86	116.00	40.62	106.82	18.91			19.99	19.99	19.99	19.99
	Order Coordination For Specified Conversion Time, Per LSR			USL	OCOSL		34.59									
	Unbundled Sub-Loop Feeder, 2-Wire Copper Loop - Zone 1		1	UCL	USBFH	9.52	114.27	38.89	104.64	18.53			19.99	19.99	19.99	19.99
	Unbundled Sub-Loop Feeder Loop, 2-Wire Copper Loop - Zone 2		2	UCL	USBFH	12.43	114.27	38.89	104.64	18.53			19.99	19.99	19.99	19.99
	Unbundled Sub-Loop Feeder Loop, 2-Wire Copper Loop - Zone 3		3	UCL	USBFH	16.26	114.27	38.89	104.64	18.53			19.99	19.99	19.99	19.99
	Order Coordination For Specified Conversion Time, per LSR			UCL	OCOSL		34.29									
	Sub-Loop Feeder - Per 4-Wire Copper Loop - Zone 1		1	UCL	USBFJ	14.37	123.41	48.03	110.44	22.53			19.99	19.99	19.99	19.99
	Sub-Loop Feeder - Per 4-Wire Copper Loop - Zone 2		2	UCL	USBFJ	18.76	123.41	48.03	110.44	22.53			19.99	19.99	19.99	19.99
	Sub-Loop Feeder - Per 4-Wire Copper Loop - Zone 3		3	UCL	USBFJ	24.53	123.41	48.03	110.44	22.53			19.99	19.99	19.99	19.99
	Order Coordination For Specified Conversion Time, per LSR			UCL	OCOSL		34.29									
	Sub-Loop Feeder - Per 4-Wire 19.2 Kbps Digital Grade Loop		1	UDL	USBFN	26.06	116.00	40.62	106.82	18.91			19.99	19.99	19.99	19.99
	Sub-Loop Feeder - Per 4-Wire 19.2 Kbps Digital Grade Loop		2	UDL	USBFN	34.03	116.00	40.62	106.82	18.91			19.99	19.99	19.99	19.99
	Sub-Loop Feeder - Per 4-Wire 19.2 Kbps Digital Grade Loop		3	UDL	USBFN	44.50	116.00	40.62	106.82	18.91			19.99	19.99	19.99	19.99
	Sub-Loop Feeder - Per 4-Wire 56 Kbps Digital Grade Loop - Zone 1		1	UDL	USBFO	26.06	116.00	40.62	106.82	18.91			19.99	19.99	19.99	19.99
	Sub-Loop Feeder - Per 4-Wire 56 Kbps Digital Grade Loop - Zone 2		2	UDL	USBFO	34.03	116.00	40.62	106.82	18.91			19.99	19.99	19.99	19.99
	Sub-Loop Feeder - Per 4-Wire 56 Kbps Digital Grade Loop - Zone 3		3	UDL	USBFO	44.50	116.00	40.62	106.82	18.91			19.99	19.99	19.99	19.99
	Order Coordination For Specified Time Conversion, per LSR			UDL	OCOSL		34.29									
	Sub-Loop Feeder - Per 4-Wire 64 Kbps Digital Grade Loop - Zone 1		1	UDL	USBFP	26.06	116.00	40.62	106.82	18.91			19.99	19.99	19.99	19.99
	Sub-Loop Feeder - Per 4-Wire 64 Kbps Digital Grade Loop - Zone 2		2	UDL	USBFP	34.03	116.00	40.62	106.82	18.91			19.99	19.99	19.99	19.99
	Sub-Loop Feeder - Per 4-Wire 64 Kbps Digital Grade Loop - Zone 3		3	UDL	USBFP	44.50	116.00	40.62	106.82	18.91			19.99	19.99	19.99	19.99
	Order Coordination For Specified Conversion Time, per LSR			UDL	OCOSL		34.29									
SUB-LOOPS																
Sub-Loop Feeder																
	Sub Loop Feeder - DS3 - Per Mile Per Month	I		UE3	1L5SL	14.11										
	Sub Loop Feeder - DS3 - Facility Termination Per Month	I		UE3	USBF1	333.26	3,406.61	407.68	165.17	501.31			20.35	10.54	13.32	
	Sub Loop Feeder – STS-1 – Per Mile Per Month	I		UDLSX	1L5SL	14.11										
	Sub Loop Feeder - STS-1 - Facility Termination Per Month	I		UDLSX	USBF7	359.02	3,406.61	407.68	165.17	501.31			20.35	10.54	13.32	
UNBUNDLED LOOP CONCENTRATION																
	Unbundled Loop Concentration - System A (TR008)			ULC	UCT8A	500.18	613.60	613.60					20.35	10.54	13.32	13.32
	Unbundled Loop Concentration - System B (TR008)			ULC	UCT8B	54.82	255.67	255.67					20.35	10.54	13.32	13.32
	Unbundled Loop Concentration - System A (TR303)			ULC	UCT3A	539.00	613.60	613.60					20.35	10.54	13.32	13.32
	Unbundled Loop Concentration - System B (TR303)			ULC	UCT3B	92.37	255.67	255.67					20.35	10.54	13.32	13.32
	Unbundled Loop Concentration - DS1 Loop Interface Card			ULC	UCTCO	6.23	74.39	53.07	30.23	8.46			20.35	10.54	13.32	13.32
	Unbundled Loop Concentration - ISDN Loop Interface (Brite Card)			UDN	ULCC1	8.46	8.69	8.65	9.71	9.65			20.35	10.54	13.32	13.32
	Unbundled Loop Concentration - UDC Loop Interface (Brite Card)			UDC	ULCCU	8.46	8.69	8.65	9.71	9.65			20.35	10.54	13.32	13.32
	Unbundled Loop Concentration - -2 Wire Voice-Loop Start or Ground Start Loop Interface (POTS Card)			UEA	ULCC2	2.32	8.69	8.65	9.71	9.65			20.35	10.54	13.32	13.32
	Unbundled Loop Concentration - 2 Wire Voice - Reverse Battery Loop Interface (SPOTS Card)			UEA	ULCCR	12.45	8.69	8.65	9.71	9.65			20.35	10.54	13.32	13.32
	Unbundled Loop Concentration - 4 Wire Voice Loop Interface (Specials Card)			UEA	ULCC4	7.53	8.69	8.65	9.71	9.65			20.35	10.54	13.32	13.332
	Unbundled Loop Concentration - TEST CIRCUIT Card			ULC	UCTTC	35.77	8.69	8.65	9.71	9.65			20.35	10.54	13.32	13.32
	Unbundled Loop Concentration - Digital 19.2 Kbps Data Loop Interface			UDL	ULCC7	11.03	8.69	8.65	9.71	9.65			20.35	10.54	13.32	13.32
	Unbundled Loop Concentration - Digital 56 Kbps Data Loop Interface			UDL	ULCC5	11.03	8.69	8.65	9.71	9.65			20.35	10.54	13.32	13.32
	Unbundled Loop Concentration - Digital 64 Kbps Data Loop Interface			UDL	ULCC6	11.03	8.69	8.65	9.71	9.65			20.35	10.54	13.32	13.32
									9.71							

UNBUNDLED NETWORK ELEMENTS - Tennessee														Attachment: 2		Exhibit: B	
CATEGORY		RATE ELEMENTS	Interim	Zone	BCS	USOC	RATES ($)					Svc Order Submitted Elec per LSR	Svc Order Submitted Manually per LSR	Incremental Charge - Manual Svc Order vs. Electronic-1st	Incremental Charge - Manual Svc Order vs. Electronic-Add'l	Incremental Charge - Manual Svc Order vs. Electronic-Disc 1st	Incremental Charge - Manual Svc Order vs. Electronic-Disc Add'l
							Rec	Nonrecurring		Nonrecurring Disconnect		OSS Rates($)					
								First	Add'l	First	Add'l	SOMEC	SOMAN	SOMAN	SOMAN	SOMAN	SOMAN
UNE OTHER, PROVISIONING ONLY - NO RATE																	
		NID - Dispatch and Service Order for NID installation			UENTW	UNDBX	0.00	0.00									
		UNTW Circuit Id Establishment, Provisioning Only - No Rate			UENTW	UENCE	0.00	0.00									
		Unbundled Contract Name, Provisioning Only - No Rate			UEANL,UEF,UEQ,UENTW	UNECN	0.00	0.00									
UNE OTHER, PROVISIONING ONLY - NO RATE																	
		Unbundled Contact Name, Provisioning Only - no rate			UAL,UCL,UDC,UDL,UDN,UEA,UHL,ULC	UNECN	0.00	0.00									
		Unbundled Sub-Loop Feeder-2 Wire Cross Box Jumper - no rate			UEA,UDN,UCL,UDC	USBFQ	0.00	0.00									
		Unbundled Sub-Loop Feeder-4 Wire Cross Box Jumper - no rate			UEA,USL,UCL,UDL	USBFR	0.00	0.00									
		Unbundled DS1 Loop - Superframe Format Option - no rate			USL	CCOSF	0.00	0.00									
		Unbundled DS1 Loop - Expanded Superframe Format option - no rate			USL	CCOEF	0.00	0.00									
HIGH CAPACITY UNBUNDLED LOCAL LOOP																	
	NOTE: minimum billing period of three months for DS3/STS-1 Local Loop																
		High Capacity Unbundled Local Loop - DS3 - Per Mile per month			UE3	1L5ND	9.19										
		High Capacity Unbundled Local Loop - DS3 - Facility Termination per month			UE3	UE3PX	374.24	595.37	304.50	234.83	170.16			36.84	36.84	19.01	19.01
		High Capacity Unbundled Local Loop - STS-1 - Per Mile per month			UDLSX	1L5ND	9.19										
		High Capacity Unbundled Local Loop - STS-1 - Facility Termination per month			UDLSX	UDLS1	389.35	595.37	304.50	215.82	151.15			36.84	36.84	19.01	19.01
	Note (1): Rates provided in TN for both electronic and manual Loop Makeup are interim and subject to retro-active true-up adjustments pending a permanent rate ruling on these rate elements from the Tennessee Regulatory Authority.																
LOOP MAKE-UP																	
		Loop Makeup - Preordering Without Reservation, per working or spare facility queried (Manual).	R		UMK	UMKLW		0.76	0.76								
		Loop Makeup - Preordering With Reservation, per spare facility queried (Manual).	R		UMK	UMKLP		0.76	0.76								
HIGH FREQUENCY SPECTRUM																	
	LINE SHARING																
	SPLITTERS-CENTRAL OFFICE BASED																
		Line Sharing Splitter, per System 96 Line Capacity			ULS	ULSDA	100.00	150.00	0.00	0.00	0.00			20.35	10.54	13.32	13.32
		Line Sharing Splitter, per System 24 Line Capacity			ULS	ULSDB	25.00	150.00	0.00	0.00	0.00			20.35	10.54	13.32	13.32
		Line Sharing-DLEC Owned Splitter in CO-CFA activaton-deactivation (per LSOD)			ULS	ULSDG		163.06	0.00	92.71	0.00			20.35	10.54	13.32	13.32
	END USER ORDERING-CENTRAL OFFICE BASED-HIGH FREQUENCY SPECTRUM AKA LINE SHARING																
		Line Sharing - per Line Activation (BST owned Splitter)			ULS	ULSDC	0.61	40.00	21.39	0.00	0.00			20.35	10.54	13.32	13.32
		Line Sharing - per Subsequent Activity per Line Rearrangement(BST Owned Splitter)			ULS	ULSDS		30.00	15.00					20.35	10.54	13.32	13.32
		Line Sharing - per Subsequent Activity per Line Rearrangement(DLEC Owned Splitter)			ULS	ULSCS		30.00	15.00					20.35	10.54	13.32	13.32
		Line Sharing - per Line Activation (DLEC owned Splitter)	I		ULS	ULSCC	0.61	47.44	19.31	0.00	0.00			20.35	10.54	13.32	13.32
	LINE SPLITTING																
	END USER ORDERING-CENTRAL OFFICE BASED																
		Line Splitting - per line activation DLEC owned splitter	I		UEPSR UEPSB	UREOS	0.61										
		Line Splitting - per line activation BST owned - physical	I		UEPSR UEPSB	UREBP	0.61	48.96	21.39	35.06	10.79			20.35	10.54	13.32	13.32
		Line Splitting - per line activation BST owned - virtual	I		UEPSR UEPSB	UREBV	0.61	48.96	21.39	35.06	10.79			20.35	10.54	13.32	13.32
	REMOTE SITE HIGH FREQUENCY SPECTRUM																
	SPLITTERS-REMOTE SITE																
		Remote Site Line Share BellSouth Owned Splitter, 24 Port	I		ULS	ULSRB	38.83	115.00	0.00	85.63	0.00			20.35	10.54	13.32	13.32
		Remote Site Line Share Cable Pair Activation CLEC Owned at RS and Deactivation	I		ULS	ULSTG		95.80	0.00	68.73	0.00			20.35	10.54	13.32	13.32
	END USER ORDERING-REMOTE SITE HIGH FREQUENCY SPECTRUM AKA REMOTE SITE LINE SHARING																
		Remote Site Line Share Line Activationfor End User Served at RS, BST Splitter	I		ULS	ULSRC	0.61	40.00	31.39	35.06	10.79			20.35	10.54	13.32	13.32

CATEGORY		RATE ELEMENTS	Interim	Zone	BCS	USOC	RATES ($)					Svc Order Submitted Elec per LSR	Svc Order Submitted Manually per LSR	Attachment: 2 Incremental Charge - Manual Svc Order vs. Electronic-1st	Attachment: 2 Incremental Charge - Manual Svc Order vs. Electronic-Add'l	Exhibit: B Incremental Charge - Manual Svc Order vs. Electronic-Disc 1st	Exhibit: B Incremental Charge - Manual Svc Order vs. Electronic-Disc Add'l
							Rec	Nonrecurring First	Nonrecurring Add'l	Nonrecurring Disconnect First	Nonrecurring Disconnect Add'l	OSS Rates($) SOMEC	OSS Rates($) SOMAN	OSS Rates($) SOMAN	OSS Rates($) SOMAN	OSS Rates($) SOMAN	OSS Rates($) SOMAN
		RS Line Share Line Activation for End User served at RS, CLEC Splitter	I		ULS	ULSTC	0.61	40.00	31.39	35.06	10.79			20.35	10.54	13.32	13.32
		Remote Site Line Share Subsequent Activity-RS BST Owned Splitter	I		ULS	ULSRS		49.23	17.86					20.35	10.54	13.32	13.32
		Remote Site Line Share Subsequent Activity-RS CLEC Owned Splitter	I		ULS	ULSTS		49.23	17.86					20.35	10.54	13.32	13.32
UNBUNDLED DEDICATED TRANSPORT																	
	NOTE: INTEROFFICE CHANNEL DEDICATED TRANSPORT - minimum billing period - below DS3=one month, DS3/STS-1=four months																
	INTEROFFICE CHANNEL - DEDICATED TRANSPORT																
		Interoffice Channel - Dedicated Transport - 2-Wire Voice Grade - Per Mile per month			U1TVX	1L5XX	0.0054										
		Interoffice Channel - Dedicated Transport- 2- Wire Voice Grade - Facility Termination			U1TVX	U1TV2	18.58	55.39	17.37	27.96	3.51			20.35	21.09	9.80	10.54
		Interoffice Channel - Dedicated Transpor t- 2-Wire Voice Grade Rev Bat. - Per Mile per month			U1TVX	1L5XX	0.0054										
		Interoffice Channel - Dedicated Transport- 2- Wire VG Rev Bat. - Facility Termination			U1TVX	U1TR2	18.58	55.39	17.37	27.96	3.51			20.35	21.09	9.80	10.54
		Interoffice Channel - Dedicated Transport - 4-Wire Voice Grade - Per Mile per month			U1TVX	1L5XX	0.0054										
		Interoffice Channel - Dedicated Transport - 4- Wire Voice Grade - Facility Termination			U1TVX	U1TV4	24.09	37.87	26.02	30.78	13.07			15.08	15.08	8.66	8.66
		Interoffice Channel - Dedicated Transport - 56 kbps - per mile per month			U1TDX	1L5XX	0.0174										
		Interoffice Channel - Dedicated Transport - 56 kbps - Facility Termination			U1TDX	U1TD5	17.98	55.39	17.37	27.96	3.51			20.35	21.09	9.80	10.54
		Interoffice Channel - Dedicated Transport - 64 kbps - per mile per month			U1TDX	1L5XX	0.0174										
		Interoffice Channel - Dedicated Transport - 64 kbps - Facility Termination			U1TDX	U1TD6	17.98	55.39	17.37	27.96	3.51			20.35	21.09	9.80	10.54
		Interoffice Channel - Dedicated Channel - DS1 - Per Mile per month			U1TD1	1L5XX	0.3562										
		Interoffice Channel - Dedicated Tranport - DS1 - Facility Termination			U1TD1	U1TF1	77.86	112.40	76.27	19.55	14.99			20.35	21.09	9.80	10.54
		Interoffice Channel - Dedicated Transport - DS3 - Per Mile per month			U1TD3	1L5XX	2.34										
		Interoffice Channel - Dedicated Transport - DS3 - Facility Termination per month			U1TD3	U1TF3	848.99	395.29	176.56	109.04	105.91			36.84	36.84	19.01	19.01
		Interoffice Channel - Dedicated Transport - STS-1 - Per Mile per month			U1TS1	1L5XX	2.34										
		Interoffice Channel - Dedicated Transport - STS-1 - Facility Termination			U1TS1	U1TFS	849.30	395.29	176.56	109.04	105.91			36.84	36.84	19.01	19.01
	LOCAL CHANNEL - DEDICATED TRANSPORT																
	NOTE: LOCAL CHANNEL DEDICATED TRANSPORT - minimum billing period = below DS3=one month, DS3/STS-1=four months																
		Local Channel - Dedicated - 2-Wire Voice Grade - Zone 1		1	ULDVX	ULDV2	17.18	199.33	24.16	54.81	4.80						
		Local Channel - Dedicated - 2-Wire Voice Grade - Zone 2		2	ULDVX	ULDV2	22.44	199.33	24.16	54.81	4.80						
		Local Channel - Dedicated - 2-Wire Voice Grade - Zone 3		3	UNDVX	ULDV2	29.34	199.33	24.16	54.81	4.80						
		Local Channel - Dedicated - 2-Wire Voice Grade Rev. Bat. - Zone 1		1	ULDVX	ULDR2	17.18	199.33	24.16	54.81	4.80						
		Local Channel - Dedicated - 2-Wire Voice Grade Rev. Bat. - Zone 2		2	ULDVX	ULDR2	22.44	199.33	24.16	54.81	4.80						
		Local Channel - Dedicated - 2-Wire Voice Grade Rev. Bat. - Zone 3		3	ULDVX	ULDR2	29.34	199.33	24.16	54.81	4.80						
		Local Channel - Dedicated - 4-Wire Voice Grade - Zone 1		1	ULDVX	ULDV4	18.18	201.53	24.83	55.52	5.51						
		Local Channel - Dedicated - 4-Wire Voice Grade - Zone 2		2	ULDVX	ULDV4	23.74	201.53	24.83	55.52	5.51						
		Local Channel - Dedicated - 4-Wire Voice Grade - Zone 3		3	ULDVX	ULDV4	31.05	201.53	24.83	55.52	5.51						
		Local Channel - Dedicated - DS1 - Zone 1		1	ULDD1	ULDF1	36.24	277.35	233.26	33.18	22.30						
		Local Channel - Dedicated - DS1 - Zone 2		2	ULDD1	ULDF1	47.33	277.35	233.26	33.18	22.30						
		Local Channel - Dedicated - DS1 - Zone 3		3	ULDD1	ULDF1	61.89	277.35	233.26	33.18	22.30						
		Local Channel - Dedicated - DS3 - Per Mile per month			ULDD3	1L5NC	7.15										

UNBUNDLED NETWORK ELEMENTS - Tennessee														Attachment: 2		Exhibit: B	
CATEGORY		RATE ELEMENTS	Interim	Zone	BCS	USOC	RATES ($)					Svc Order Submitted Elec per LSR	Svc Order Submitted Manually per LSR	Incremental Charge - Manual Svc Order vs. Electronic-1st	Incremental Charge - Manual Svc Order vs. Electronic-Add'l	Incremental Charge - Manual Svc Order vs. Electronic-Disc 1st	Incremental Charge - Manual Svc Order vs. Electronic-Disc Add'l
							Rec	Nonrecurring		Nonrecurring Disconnect		OSS Rates($)					
								First	Add'l	First	Add'l	SOMEC	SOMAN	SOMAN	SOMAN	SOMAN	SOMAN
		Local Channel - Dedicated - DS3 - Facility Termination			ULDD3	ULDF3	611.30	595.37	304.50	215.82	151.15			36.84	36.84	19.01	19.01
		Local Channel - Dedicated - STS-1- Per Mile per month			ULDS1	1L5NC	7.15										
		Local Channel - Dedicated - STS-1 - Facility Termination			ULDS1	ULDFS	599.59	588.07	297.20	215.82	151.15			20.35	21.09	9.80	10.54
DARK FIBER																	
		Dark Fiber, Four Fiber Strands, Per Route Mile or Fraction Thereof per month - Local Channel			UDF	1L5DC	58.83										
		NRC Dark Fiber - Local Channel			UDF	UDFC4		1,121.00	153.19	580.26	357.17			20.35	21.09	9.80	10.54
		Dark Fiber, Four Fiber Strands, Per Route Mile or Fraction Thereof per month - Interoffice Channel			UDF	1L5DF	28.74										
		NRC Dark Fiber - Interoffice Channel			UDF	UDF14		1,121.00	153.19	580.26	357.17			20.35	21.09	9.80	10.54
		Dark Fiber, Four Fiber Strands, Per Route Mile or Fraction Thereof per month - Local Loop			UDF	1L5DL	58.83										
		NRC Dark Fiber - Local Loop			UDF	UDFL4		1,121.00	153.19	580.26	357.17			20.35	21.09	9.80	10.54
8XX ACCESS TEN DIGIT SCREENING																	
		8XX Access Ten Digit Screening, Per Call			OHD		0.0005192										
		8XX Access Ten Digit Screening, Reservation Charge Per 8XX Number Reserved			OHD	N8R1X		5.21	0.76					20.35	20.35	13.28	13.28
		8XX Access Ten Digit Screening, Per 8XX No. Established W/O POTS Translations			OHD			11.47	1.46	7.34	0.7602			20.35	20.35	13.28	13.28
		8XX Access Ten Digit Screening, Per 8XX No. Established With POTS Translations			OHD	N8FTX		11.47	1.46	7.34	0.7602			20.35	20.35	13.28	13.28
		8XX Access Ten Digit Screening, Customized Area of Service Per 8XX Number			OHD	N8FCX		4.47	2.24					20.35	20.35	13.28	13.28
		8XX Access Ten Digit Screening, Multiple InterLATA CXR Routing Per CXR Requested Per 8XX No.			OHD	N8FMX		5.23	3.00					20.35	20.35	13.28	13.28
		8XX Access Ten Digit Screening, Change Charge Per Request			OHD	N8FAX		5.97	0.76					20.35	20.35	13.28	13.28
		8XX Access Ten Digit Screening, Call Handling and Destination Features			OHD	N8FDX		4.47						20.35	20.35	13.28	13.28
LINE INFORMATION DATA BASE ACCESS (LIDB)																	
		LIDB Common Transport Per Query			OQT		0.0000354										
		LIDB Validation Per Query			OQU		0.0117403										
		LIDB Originating Point Code Establishment or Change			OQT, OQU	NRPBX		49.03						20.35	20.35	13.28	13.28
SIGNALING (CCS7)																	
		CCS7 Signaling Termination, Per STP Port			UDB	PT8SX	138.41										
		CCS7 Signaling Usage, Per TCAP Message			UDB		0.0000916										
		CCS7 Signaling Connection, Per link (A link)			UDB	TPP++	17.84	130.84	130.84					20.35	20.35	13.32	13.32
		CCS7 Signaling Connection, Per link (B link) (also known as D link)			UDB	TPP++	17.84	130.84	130.84					20.35	20.35	13.32	13.32
		CCS7 Signaling Usage, Per ISUP Message			UDB		0.0000373										
		CCS7 Signaling Usage Surrogate, per link per LATA			UDB	STU56	352.30										
		Signaling Point Code, per Originating Point Code Establishment or Change, per STP			UDB	CCAPO		121.77	121.77					20.35	20.35	13.32	13.32
CALLING NAME (CNAM) SERVICE																	
		CNAM for DB Owners, Per Query			OQV		0.0010541										
		CNAM for Non DB Owners, Per Query			OQV		0.0010541										
		CNAM (Non-Databs Owner), NRC, applies when using the Character Based User Interface (CHUI)			OQV	CDDCH		595.00	595.00					20.35	20.35	13.28	13.28
OPERATOR CALL PROCESSING																	
		Oper. Call Processing - Oper. Provided, Per Min. - Using BST LIDB					1.08										
		Oper. Call Processing - Oper. Provided, Per Min. - Using Foreign LIDB					1.13										
		Oper. Call Processing - Fully Automated, per Call - Using BST LIDB					0.1010353										
		Oper. Call Processing - Fully Automated, per Call - Using Foreign LIDB					0.122818										
INWARD OPERATOR SERVICES																	
		Inward Operator Services - Verification, Per Minute					1.03										

CATEGORY	RATE ELEMENTS	Interim	Zone	BCS	USOC	RATES ($) Rec	Nonrecurring First	Nonrecurring Add'l	Nonrecurring Disconnect First	Nonrecurring Disconnect Add'l	Svc Order Submitted Elec per LSR SOMEC	Svc Order Submitted Manually per LSR SOMAN	Attachment: 2 Incremental Charge - Manual Svc Order vs. Electronic-1st SOMAN	Attachment: 2 Incremental Charge - Manual Svc Order vs. Electronic-Add'l SOMAN	Exhibit: B Incremental Charge - Manual Svc Order vs. Electronic-Disc 1st SOMAN	Exhibit: B Incremental Charge - Manual Svc Order vs. Electronic-Disc Add'l SOMAN
											OSS Rates($)					
	Inward Operator Services - Verification and Emergency Interrupt - Per Minute					1.03										
BRANDING - OPERATOR CALL PROCESSING																
Facility based CLEC																
	Recording of Custom Branded OA Announcement				CBAOS		1,555.00	1,553.00	7.03	7.03			19.99	19.99	19.99	19.99
	Loading of Custom Branded OA Announcement per shelf/NAV per OCN				CBAOL		240.71	240.71					19.99	19.99		
UNEP CLEC																
	Recording of Custom Branded OA Announcement						1,555.00	1,555.00					19.99	19.99	19.99	19.99
	Loading of Custom Branded OA Announcement per shelf/NAV per OCN						240.71	240.71					19.99	19.99		
Unbranding via OLNS for UNEP CLEC																
	Loading of OA per OCN (Regional)						1,200.00	1,200.00					19.99	19.99		
DIRECTORY ASSISTANCE SERVICES																
DIRECTORY ASSISTANCE ACCESS SERVICE																
	Directory Assistance Access Service Calls, Charge Per Call					0.2286787										
DIRECTORY ASSISTANCE CALL COMPLETION ACCESS SERVICE (DACC)																
	Directory Assistance Call Completion Access Service (DACC), Per Call Attempt					0.0364771										
NUMBER SERVICES INTERCEPT ACCESS SERVICE																
	Number Services Intercept Per Query					0.017793										
DIRECTORY TRANSPORT (DT)																
	DT-Local Channel DS1			ULDD1	ULDF1	40.99	277.35	233.26	33.18	22.30			20.35	10.54	13.32	1.40
	DT-DS1 Level Interoffice per mile			U1TD1	1L5XX	0.3562										
	DT-DS1 Level Interoffice per facility termination			U1TD1	U1TF1	77.86	112.40	76.27	19.55	14.99			20.35	10.54	13.32	1.40
	SWA Common Transport per Directory Assistance Access Service Per Call					0.000271										
	SWA Common Transport per Directory Assistance Access Service Per Call Per Mile					0.0000165										
	Access Tandem Switching Per Directory Assistance Access Service Per Call					0.0001875										
	DT- Directory Assistance Interconnection Per Directory Assistance Service Call					0.00										
	DT-Installation NRC, Per Trunk or Signaling Connection			OHD	TPP1X		204.62	4.43	136.09	4.43			20.35	10.54	13.32	1.40
DIRECTORY ASSISTANCE SERVICES																
DIRECTORY ASSISTANCE DATA BASE SERVICE (DADS)																
	Directory Assistance Data Base Service Charge Per Listing					0.0485										
	Directory Assistance Data Base Service, per month				DBSOF	104.13										
BRANDING - DIRECTORY ASSISTANCE																
Facility Based CLEC																
	Recording and Provisioning of DA Custom Branded Announcement			AMT	CBADA		1,555.00	1,553.00	7.03	7.03			20.35	10.54	13.32	1.40
	Loading of Custom Branded Announcement per Switch per OCN			AMT	CBADC		240.71	240.71					20.35	10.54		
UNEP CLEC																
	Recording of DA Custom Branded Announcement						1,555.00	1,553.00	7.03	7.03			20.35	10.54	13.32	1.40
	Loading of DA Custom Branded Announcement per Switch per OCN						240.71	240.71					20.35	10.54		
Unbranding via OLNS for UNEP CLEC																
	Loading of DA per OCN (1 OCN per Order)						420.00	420.00					20.35	10.54		
	Loading of DA per Switch per OCN						16.00	16.00					20.35	10.54		
SELECTIVE ROUTING																
	Selective Routing Per Unique Line Class Code Per Request Per Switch				USRCR		179.60	179.60					20.35	20.35		
VIRTUAL COLLOCATION																
	Virtual Collocation-2 Wire Cross Connects (Loop) for Line Splitting			UEPSR, UEPSB	VE1LS	0.57	11.62	9.90	10.38	8.66			19.99	19.99	19.99	19.99
PHYSICAL COLLOCATION																

CATEGORY	RATE ELEMENTS	Interim	Zone	BCS	USOC	RATES ($) Rec	Nonrecurring First	Nonrecurring Add'l	Nonrecurring Disconnect First	Nonrecurring Disconnect Add'l	Svc Order Submitted Elec per LSR	Svc Order Submitted Manually per LSR	Attachment: 2 Incremental Charge - Manual Svc Order vs. Electronic-1st	Attachment: 2 Incremental Charge - Manual Svc Order vs. Electronic-Add'l	Exhibit: B Incremental Charge - Manual Svc Order vs. Electronic-Disc 1st	Exhibit: B Incremental Charge - Manual Svc Order vs. Electronic-Disc Add'l
											OSS Rates($)					
							First	Add'l	First	Add'l	SOMEC	SOMAN	SOMAN	SOMAN	SOMAN	SOMAN
	Physical Collocation-2 Wire Cross Connects (Loop) for Line Splitting			UEPSR, UEPSB	PE1LS	0.0318	11.94	11.46					19.99	19.99	19.99	19.99
AIN SELECTIVE CARRIER ROUTING																
	Regional Service Establishment			SRC	SRCEC		190,638.00						20.35			
	End Office Establishment			SRC	SRCEO		317.55	317.55	3.19	3.19			20.35	20.35	13.28	13.28
	Query NRC, per query			SRC		0.0206047										
AIN - BELLSOUTH AIN SMS ACCESS SERVICE																
	AIN SMS Access Service - Service Establishment, Per State, Initial Setup			A1N	CAMSE		135.56	135.56					20.35	20.35	13.28	13.28
	AIN SMS Access Service - Port Connection - Dial/Shared Access			A1N	CAMDP		41.75	41.75					20.35	20.35	13.28	13.28
	AIN SMS Access Service - Port Connection - ISDN Access			A1N	CAM1P		41.75	41.75					20.35	20.35	13.28	13.28
	AIN SMS Access Service - User Identification Codes - Per User ID Code			A1N	CAMAU		96.63	96.63					20.35	20.35	13.28	13.28
	AIN SMS Access Service - Security Card, Per User ID Code, Initial or Replacement			A1N	CAMRC		113.67	113.67					20.35	20.35	13.28	13.28
	AIN SMS Access Service - Storage, Per Unit (100 Kilobytes)					0.0024										
	AIN SMS Access Service - Session, Per Minute					0.0820123										
	AIN SMS Access Service - Company Performed Session, Per Minute					2.27										
AIN - BELLSOUTH AIN TOOLKIT SERVICE																
	AIN Toolkit Service - Service Establishment Charge, Per State, Initial Setup			CAM	BAPSC		132.04	132.04					20.35	20.35	13.28	13.28
	AIN Toolkit Service - Training Session, Per Customer				BAPVX		7,915.00	7,915.00					20.35	20.35	13.28	13.28
	AIN Toolkit Service - Trigger Access Charge, Per Trigger, Per DN, Term. Attempt				BAPTT		31.21	31.21					20.35	20.35	13.28	13.28
	AIN Toolkit Service - Trigger Access Charge, Per Trigger, Per DN, Off-Hook Delay				BAPTD		31.21	31.21					20.35	20.35	13.28	13.28
	AIN Toolkit Service - Trigger Access Charge, Per Trigger, Per DN, Off-Hook Immediate				BAPTM		31.21	31.21					20.35	20.35	13.28	13.28
	AIN Toolkit Service - Trigger Access Charge, Per Trigger, Per DN, 10-Digit PODP				BAPTO		85.24	85.24					20.35	20.35	13.28	13.28
	AIN Toolkit Service - Trigger Access Charge, Per Trigger, Per DN, CDP				BAPTC		85.24	85.24					20.35	20.35	13.28	13.28
	AIN Toolkit Service - Trigger Access Charge, Per Trigger, Per DN, Feature Code				BAPTF		85.24	85.24					20.35	20.35	13.28	13.28
	AIN Toolkit Service - Query Charge, Per Query					0.0211882										
	AIN Toolkit Service - Type 1 Node Charge, Per AIN Toolkit Subscription, Per Node, Per Query					0.0054774										
	AIN Toolkit Service - SCP Storage Charge, Per SMS Access Account, Per 100 Kilobytes					1.50										
	AIN Toolkit Service - Monthly report - Per AIN Toolkit Service Subscription			CAM	BAPMS	17.43	33.52	33.52					20.35	20.35	13.28	13.28
	AIN Toolkit Service - Special Study - Per AIN Toolkit Service Subscription			CAM	BAPLS	0.1321116	36.23	36.23					20.35	20.35	13.28	13.28
	AIN Toolkit Service - Call Event Report - Per AIN Toolkit Service Subscription			CAM	BAPDS	17.35	33.52	33.52					20.35	20.35	13.28	13.28
	AIN Toolkit Service - Call Event Special Study - Per AIN Toolkit Service Subscription			CAM	BAPES	0.0511435	36.23	36.23					20.35	20.35	13.28	13.28
ENHANCED EXTENDED LINK (EELs)																
	NOTE: The monthly recurring and non-recurring charges below will apply and the Switch-As-Is Charge will not apply for EELs provisioned as ' Ordinarily Combined' Network Elements.															
	NOTE: The monthly recurring and the Switch-As-Is Charge and not the non-recurring charges below will apply for EELs provisioned as ' Currently Combined' Network Elements.															
	NOTE: Minimum billing is one month for DS1 and below and three months above DS1 services.															
	2-WIRE VOICE GRADE EXTENDED LOOP WITH DEDICATED DS1 INTEROFFICE TRANSPORT (EEL)															
	First 2-Wire VG Loop(SL2) in a DS1 Interofficed Transport Combination - Zone 1		1	UNCVX	UEAL2	16.56	108.76	35.47	72.94	10.86			20.35	21.09	9.80	10.54
	First 2-Wire VG Grade Loop(SL2) in a DS1 Interofficed Transport Combination - Zone 2		2	UNCVX	UEAL2	21.63	108.76	35.47	72.94	10.86			20.35	21.09	9.80	10.54

UNBUNDLED NETWORK ELEMENTS - Tennessee														Attachment: 2		Exhibit: B	
CATEGORY		RATE ELEMENTS	Interim	Zone	BCS	USOC	RATES ($)					Svc Order Submitted Elec per LSR	Svc Order Submitted Manually per LSR	Incremental Charge - Manual Svc Order vs. Electronic-1st	Incremental Charge - Manual Svc Order vs. Electronic-Add'l	Incremental Charge - Manual Svc Order vs. Electronic-Disc 1st	Incremental Charge - Manual Svc Order vs. Electronic-Disc Add'l
							Rec	Nonrecurring		Nonrecurring Disconnect		OSS Rates($)					
								First	Add'l	First	Add'l	SOMEC	SOMAN	SOMAN	SOMAN	SOMAN	SOMAN
		First 2-Wire VG Grade Loop(SL2) in a DS1 Interofficed Transport Combination - Zone 3		3	UNCVX	UEAL2	28.28	108.76	35.47	72.94	10.86			20.35	21.09	9.80	10.54
		Interoffice Transport - Dedicated - DS1 combination - Per Mile per month			UNC1X	1L5XX	0.3562										
		Interoffice Transport - Dedicated - DS1 combination - Facility Termination per month			UNC1X	U1TF1	77.86	171.24	113.12	70.07	30.90			20.35	21.09	9.80	10.54
		DS1 Channelization System Per Month			UNC1X	MQ1	80.77	105.76	14.48	3.04	2.74						
		Voice Grade COCI - DS1 To Ds0 Interface - Per Month			UNCVX	1D1VG	0.91	5.70	4.42								
		Each Additional 2-Wire VG Loop(SL 2) in the same DS1 Interoffice Transport Combination - Zone 1		1	UNCVX	UEAL2	16.56	108.76	35.47	72.94	10.86			20.35	21.09	9.80	10.54
		Each Additional 2-Wire VG Loop(SL2) in the same DS1 Interoffice Transport Combination - Zone 2		2	UNCVX	UEAL2	21.63	108.76	35.47	72.94	10.86			20.35	21.09	9.80	10.54
		Each Additional 2-Wire VG Loop(SL2) in the same DS1 Interoffice Transport Combination - Zone 3		3	UNCVX	UEAL2	28.28	108.76	35.47	72.94	10.86			20.35	21.09	9.80	10.54
		Voice Grade COCI - DS1 to DS0 Channel System combination - per month			UNCVX	1D1VG	0.91	5.70	4.42								
		Nonrecurring Currently Combined Network Elements Switch -As-Is Charge			UNC1X	UNCCC		52.73	24.62	9.12	9.12			20.35	21.09	9.80	10.54
	4-WIRE VOICE GRADE EXTENDED LOOP WITH DEDICATED DS1 INTEROFFICE TRANSPORT (EEL)																
		First 4-Wire Analog Voice Grade Loop in a DS1 Interoffice Transport Combination - Zone 1		1	UNCVX	UEAL4	24.70	108.76	35.47	72.94	10.86			20.35	21.09	9.80	10.54
		First 4-Wire Analog Voice Grade Loop in a DS1 Interoffice Transport Combination - Zone 2		2	UNCVX	UEAL4	32.26	108.76	35.47	72.94	10.86			20.35	21.09	9.80	10.54
		First 4-Wire Analog Voice Grade Loop in a DS1 Interoffice Transport Combination - Zone 3		3	UNCVX	UEAL4	42.18	108.76	35.47	72.94	10.86			20.35	21.09	9.80	10.54
		Interoffice Transport - Dedicated - DS1 combination - Per Mile Per Month			UNC1X	1L5XX	0.3562										
		Interoffice Transport - Dedicated - DS1 - Facility Termination Per Month			UNC1X	U1TF1	77.86	171.24	113.12	70.07	30.90			20.35	21.09	9.80	10.54
		Channelization - Channel System DS1 to DS0 combination Per Month			UNC1X	MQ1	80.77	105.76	14.48	3.04	2.74						
		Voice Grade COCI - DS1 to DS0 Channel System combination - per month			UNCVX	1D1VG	0.91	5.70	4.42								
		Additional 4-Wire Analog Voice Grade Loop in same DS1 Interoffice Transport Combination - Zone 1		1	UNCVX	UEAL4	24.70	108.76	35.47	72.94	10.86			20.35	21.09	9.80	10.54
		Additional 4-Wire Analog Voice Grade Loop in same DS1 Interoffice Transport Combination - Zone 2		2	UNCVX	UEAL4	32.26	108.76	35.47	72.94	10.86			20.35	21.09	9.80	10.54
		Additional 4-Wire Analog Voice Grade Loop in same DS1 Interoffice Transport Combination - Zone 3		3	UNCVX	UEAL4	42.18	108.76	35.47	72.94	10.86			20.35	21.09	9.80	10.54
		Voice Grade COCI - DS1 to DS0 Channel System combination - per month			UNCVX	1D1VG	0.91	5.70	4.42								
		Nonrecurring Currently Combined Network Elements Switch -As-Is Charge			UNC1X	UNCCC		52.73	24.62	9.12	9.12			20.35	21.09	9.80	10.54
	4-WIRE 56 KBPS EXTENDED DIGITAL LOOP WITH DEDICATED DS1 INTEROFFICE TRANSPORT (EEL)																
		First 4-Wire 56Kbps Digital Grade Loop in a DS1 Interoffice Transport Combination - Zone 1		1	UNCDX	UDL56	31.10	108.76	35.47	72.94	10.86			20.35	21.09	9.80	10.54
		First 4-wire 56Kbps Digital Grade Loop in a DS1 Interoffice Transport Combination - Zone 2		2	UNCDX	UDL56	40.61	108.76	35.47	72.94	10.86			20.35	21.09	9.80	10.54
		First 4-Wire 56Kbps Digital Grade Loop in a DS1 Interoffice Transport Combination - Zone 3		3	UNCDX	UDL56	53.11	108.76	35.47	72.94	10.86			20.35	21.09	9.80	10.54
		Interoffice Transport - Dedicated - DS1 combination - Per Mile Per Month			UNC1X	1L5XX	0.3562										
		Interoffice Transport - Dedicated - DS1 - combination Facility Termination Per Month			UNC1X	U1TF1	77.86	171.24	113.12	70.07	30.90			20.35	21.09	9.80	10.54
		Channelization - Channel System DS1 to DS0 combination Per Month			UNC1X	MQ1	80.77	105.76	14.48	3.04	2.74						
		OCU-DP COCI (data) - DS1 to DS0 Channel System - per month (2.4-64kbs)			UNCDX	1D1DD	0.91	5.70	4.42								

CATEGORY	RATE ELEMENTS	Interim	Zone	BCS	USOC	RATES ($)					Svc Order Submitted Elec per LSR	Svc Order Submitted Manually per LSR	Attachment: 2 Incremental Charge - Manual Svc Order vs. Electronic-1st	Attachment: 2 Incremental Charge - Manual Svc Order vs. Electronic-Add'l	Exhibit: B Incremental Charge - Manual Svc Order vs. Electronic-Disc 1st	Exhibit: B Incremental Charge - Manual Svc Order vs. Electronic-Disc Add'l
						Rec	Nonrecurring		Nonrecurring Disconnect		OSS Rates($)					
							First	Add'l	First	Add'l	SOMEC	SOMAN	SOMAN	SOMAN	SOMAN	SOMAN
	Additional 4-Wire 56Kbps Digital Grade Loopin same DS1 Interoffice Transport Combination - Zone 1		1	UNCDX	UDL56	31.10	108.76	35.47	72.94	10.86			20.35	21.09	9.80	10.54
	Additional 4-Wire 56Kbps Digital Grade Loopin same DS1 Interoffice Transport Combination - Zone 2		2	UNCDX	UDL56	40.61	108.76	35.47	72.94	10.86			20.35	21.09	9.80	10.54
	Additional 4-Wire 56Kbps Digital Grade Loopin same DS1 Interoffice Transport Combination - Zone 3		3	UNCDX	UDL56	53.11	108.76	35.47	72.94	10.86			20.35	21.09	9.80	10.54
	OCU-DP COCI (data) - DS1 to DS0 Channel System - combination per month (2.4-64kbs)			UNCDX	1D1DD	0.91	5.70	4.42								
	Nonrecurring Currently Combined Network Elements Switch -As-Is Charge			UNC1X	UNCCC		52.73	24.62	9.12	9.12			20.35	21.09	9.80	10.54
4-WIRE 64 KBPS EXTENDED DIGITAL LOOP WITH DEDICATED DS1 INTEROFFICE TRANSPORT (EEL)																
	First 4-Wire 64Kbps Digital Grade Loop in a DS1 Interoffice Transport Combination - Zone 1		1	UNCDX	UDL64	31.10	108.76	35.47	72.94	10.86			20.35	21.09	9.80	10.54
	First 4-Wire 64Kbps Digital Grade Loop in a DS1 Interoffice Transport Combination - Zone 2		2	UNCDX	UDL64	40.61	108.76	35.47	72.94	10.86			20.35	21.09	9.80	10.54
	First 4-Wire 64Kbps Digital Grade Loop in a DS1 Interoffice Transport Combination - Zone 3		3	UNCDX	UDL64	53.11	108.76	35.47	72.94	10.86			20.35	21.09	9.80	10.54
	Interoffice Transport - Dedicated - DS1 combination - Per Mile Per Month			UNC1X	1L5XX	0.3562										
	Interoffice Transport - Dedicated - DS1 combination - Facility Termination Per Month			UNC1X	U1TF1	77.86	171.24	113.12	70.07	30.90			20.35	21.09	9.80	10.54
	Channelization - Channel System DS1 to DS0 combination Per Month			UNC1X	MQ1	80.77	105.76	14.48	3.04	2.74			20.35	21.09	9.80	10.54
	OCU-DP COCI (data) - DS1 to DS0 Channel System combination - per month (2.4-64kbs)			UNCDX	1D1DD	0.91	5.70	4.42								
	Additional 4-Wire 64Kbps Digital Grade Loopin same DS1 Interoffice Transport Combination - Zone 1		1	UNCDX	UDL64	31.10	108.76	35.47	72.94	10.86			20.35	21.09	9.80	10.54
	Additional 4-Wire 64Kbps Digital Grade Loopin same DS1 Interoffice Transport Combination - Zone 2		2	UNCDX	UDL64	40.61	108.76	35.47	72.94	10.86			20.35	21.09	9.80	10.54
	Additional 4-Wire 64Kbps Digital Grade Loopin same DS1 Interoffice Transport Combination - Zone 3		3	UNCDX	UDL64	53.11	108.76	35.47	72.94	10.86			20.35	21.09	9.80	10.54
	OCU-DP COCI (data) - DS1 to DS0 Channel System combination - per month (2.4-64kbs)			UNCDX	1D1DD	0.91	5.70	4.42								
	Nonrecurring Currently Combined Network Elements Switch -As-Is Charge			UNC1X	UNCCC		52.73	24.62	9.12	9.12			20.35	21.09	9.80	10.54
4-WIRE DS1 DIGITAL EXTENDED LOOP WITH DEDICATED DS1 INTEROFFICE TRANSPORT (EEL)																
	4-Wire DS1 Digital Loop in Combination with DS1 Interoffice Transport - Zone 1		1	UNC1X	USLXX	57.73	228.40	161.74	79.87	24.88			20.35	21.09	9.80	10.54
	4-Wire DS1 Digital Loop in Combination with DS1 Interoffice Transport - Zone 2		2	UNC1X	USLXX	75.40	228.40	161.74	79.87	24.88			20.35	21.09	9.80	10.54
	4-Wire DS1 Digital Loop in Combination with DS1 Interoffice Transport - Zone 3		3	UNC1X	USLXX	98.59	228.40	161.74	79.87	24.88			20.35	21.09	9.80	10.54
	Interoffice Transport - Dedicated - DS1 combination - Per Mile Per Month			UNC1X	1L5XX	0.3562										
	Interoffice Transport - Dedicated - DS1 combination - Facility Termination Per Month			UNC1X	U1TF1	77.86	171.24	113.12	70.07	30.90			20.35	21.09	9.80	10.54
	Nonrecurring Currently Combined Network Elements Switch -As-Is Charge			UNC1X	UNCCC		52.73	24.62	9.12	9.12			20.35	21.09	9.80	10.54
4-WIRE DS1 DIGITAL EXTENDED LOOP WITH DEDICATED DS3 INTEROFFICE TRANSPORT (EEL)																
	First DS1Loop in DS3 Interoffice Transport Combination - Zone 1		1	UNC1X	USLXX	57.73	228.40	161.74	79.87	24.88			20.35	21.09	9.80	10.54
	First DS1Loop in DS3 Interoffice Transport Combination - Zone 2		2	UNC1X	USLXX	75.40	228.40	161.74	79.87	24.88			20.35	21.09	9.80	10.54
	First DS1Loop in DS3 Interoffice Transport Combination - Zone 3		3	UNC1X	USLXX	98.59	228.40	161.74	79.87	24.88			20.35	21.09	9.80	10.54
	Interoffice Transport - Dedicated - DS3 combination - Per Mile Per Month			UNC3X	1L5XX	2.34										
	Interoffice Transport - Dedicated - DS3 - Facility Termination per month			UNC3X	U1TF3	854.97	482.01	153.81	64.43	35.43			20.35	21.09	9.80	10.54

UNBUNDLED NETWORK ELEMENTS - Tennessee														Attachment: 2		Exhibit: B	
CATEGORY		RATE ELEMENTS	Interim	Zone	BCS	USOC	RATES ($)					Svc Order Submitted Elec per LSR	Svc Order Submitted Manually per LSR	Incremental Charge - Manual Svc Order vs. Electronic-1st	Incremental Charge - Manual Svc Order vs. Electronic-Add'l	Incremental Charge - Manual Svc Order vs. Electronic-Disc 1st	Incremental Charge - Manual Svc Order vs. Electronic-Disc Add'l
							Rec	Nonrecurring		Nonrecurring Disconnect		OSS Rates($)					
								First	Add'l	First	Add'l	SOMEC	SOMAN	SOMAN	SOMAN	SOMAN	SOMAN
		DS3 to DS1 Channel System combination per month			UNC3X	MQ3	222.98	156.02	49.41	17.12	6.77						
		DS3 Interface Unit (DS1 COCI) combination per month			UNC1X	UC1D1	17.58	5.70	4.42								
		Additional DS1Loop in DS3 Interoffice Transport Combination - Zone 1		1	UNC1X	USLXX	57.73	228.40	161.74	79.87	24.88			20.35	21.09	9.80	10.54
		Additional DS1Loop in DS3 Interoffice Transport Combination - Zone 2		2	UNC1X	USLXX	75.40	228.40	161.74	79.87	24.88			20.35	21.09	9.80	10.54
		Additional DS1Loop in DS3 Interoffice Transport Combination - Zone 3		3	UNC1X	USLXX	98.59	228.40	161.74	79.87	24.88			20.35	21.09	9.80	10.54
		DS3 Interface Unit (DS1 COCI) combination per month			UNC1X	UC1D1	17.58	5.70	4.42								
		Nonrecurring Currently Combined Network Elements Switch -As-Is Charge			UNC3X	UNCCC		52.73	24.62	9.12	9.12			20.35	21.09	9.80	10.54
	2-WIRE VOICE GRADE EXTENDED LOOP/ 2 WIRE VOICE GRADE INTEROFFICE TRANSPORT (EEL)																
		2-WireVG Loop used with 2-wire VG Interoffice Transport Combination - Zone 1		1	UNCVX	UEAL2	16.56	108.76	35.47	72.94	10.86			20.35	21.09	9.80	10.54
		2-WireVG Loop used with 2-wire VG Interoffice Transport Combination - Zone 2		2	UNCVX	UEAL2	21.63	108.76	35.47	72.94	10.86			20.35	21.09	9.80	10.54
		2-WireVG Loop used with 2-wire VG Interoffice Transport Combination - Zone 3		3	UNCVX	UEAL2	28.28	108.76	35.47	72.94	10.86			20.35	21.09	9.80	10.54
		Interoffice Transport - Dedicated - 2-wire VG combination - Per Mile Per Month			UNCVX	1L5XX	0.0174										
		Interoffice Transport - Dedicated - 2- Wire Voice Grade combination - Facility Termination per month			UNCVX	U1TV2	21.79	79.83	44.08	69.32	31.00			20.35	21.09	9.80	10.54
		Nonrecurring Currently Combined Network Elements Switch -As-Is Charge			UNCVX	UNCCC		52.73	24.62	9.12	9.12			20.35	21.09	9.80	10.54
	4-WIRE VOICE GRADE EXTENDED LOOP/ 4 WIRE VOICE GRADE INTEROFFICE TRANSPORT (EEL)																
		4-WireVG Loop used with 4-wire VG Interoffice Transport Combination - Zone 1		1	UNCVX	UEAL4	24.70	108.76	35.47	72.94	10.86			20.35	21.09	9.80	10.54
		4-WireVG Loop used with 4-wire VG Interoffice Transport Combination - Zone 2		2	UNCVX	UEAL4	32.26	108.76	35.47	72.94	10.86			20.35	21.09	9.80	10.54
		4-WireVG Loop used with 4-wire VG Interoffice Transport Combination - Zone 3		3	UNCVX	UEAL4	42.18	108.76	35.47	72.94	10.86			20.35	21.09	9.80	10.54
		Interoffice Transport - Dedicated - 4-wire VG combination - Per Mile Per Month			UNCVX	1L5XX	0.0174										
		Interoffice Transport - Dedicated - 4- Wire Voice Grade combination - Facility Termination per month			UNCVX	U1TV4	27.30	79.83	44.08	69.32	31.00			20.35	21.09	9.80	10.54
		Nonrecurring Currently Combined Network Elements Switch -As-Is Charge			UNCVX	UNCCC		52.73	24.62	9.12	9.12			20.35	21.09	9.80	10.54
	DS3 DIGITAL EXTENDED LOOP WITH DEDICATED DS3 INTEROFFICE TRANSPORT (EEL)																
		High Capacity Unbundled Local Loop - DS3 combination - Per Mile per month			UNC3X	1L5ND	9.19										
		High Capacity Unbundled Local Loop - DS3 combination - Facility Termination per month			UNC3X	UE3PX	373.47	240.23	180.87	106.78	45.24			20.35	21.09	9.80	10.54
		Interoffice Transport - Dedicated - DS3 - Per Mile per month			UNC3X	1L5XX	2.34										
		Interoffice Transport - Dedicated - DS3 combination - Facility Termination per per month			UNC3X	U1TF3	854.97	482.01	153.81	64.43	35.43			20.35	21.09	9.80	10.54
		Nonrecurring Currently Combined Network Elements Switch -As-Is Charge			UNC3X	UNCCC		52.73	24.62	9.12	9.12			20.35	21.09	9.80	10.54
	STS1 DIGITAL EXTENDED LOOP WITH DEDICATED STS1 INTEROFFICE TRANSPORT (EEL)																
		High Capacity Unbundled Local Loop - STS1 combination - Per Mile per month			UNCSX	1L5ND	9.19										
		High Capacity Unbundled Local Loop - STS1 combination - Facility Termination per month			UNCSX	UDLS1	394.56	240.23	180.87	106.78	45.24			20.35	21.09	9.80	10.54
		Interoffice Transport - Dedicated - STS1 combination - Per Mile per month			UNCSX	1L5XX	2.34										
		Interoffice Transport - Dedicated - STS1 combination - Facility Termination per month			UNCSX	U1TFS	849.30	482.01	153.81	64.43	35.43			20.35	21.09	9.80	10.54
		Nonrecurring Currently Combined Network Elements Switch -As-Is Charge			UNCSX	UNCCC		52.73	24.62	9.12	9.12			20.35	21.09	9.80	10.54
	2-WIRE ISDN EXTENDED LOOP WITH DS1 INTEROFFICE TRANSPORT (EEL)																

CATEGORY	RATE ELEMENTS	Interim	Zone	BCS	USOC	RATES ($)					Svc Order Submitted Elec per LSR	Svc Order Submitted Manually per LSR	Attachment: 2 Incremental Charge - Manual Svc Order vs. Electronic-1st	Attachment: 2 Incremental Charge - Manual Svc Order vs. Electronic-Add'l	Exhibit: B Incremental Charge - Manual Svc Order vs. Electronic-Disc 1st	Exhibit: B Incremental Charge - Manual Svc Order vs. Electronic-Disc Add'l
						Rec	Nonrecurring		Nonrecurring Disconnect		OSS Rates($)					
							First	Add'l	First	Add'l	SOMEC	SOMAN	SOMAN	SOMAN	SOMAN	SOMAN
	First 2-Wire ISDN Loop in a DS1 Interoffice Combination Transport - Zone 1		1	UNCNX	U1L2X	22.22	108.76	35.47	72.94	10.86			20.35	21.09	9.80	10.54
	First 2-Wire ISDN Loop in a DS1 Interoffice Combination Transport - Zone 2		2	UNCNX	U1L2X	29.02	108.76	35.47	72.94	10.86			20.35	21.09	9.80	10.54
	First 2-Wire ISDN Loop in a DS1 Interoffice Combination Transport - Zone 3		3	UNCNX	U1L2X	37.95	108.76	35.47	72.94	10.86			20.35	21.09	9.80	10.54
	Interoffice Transport - Dedicated - DS1 combination - Per Mile			UNC1X	1L5XX	0.3562										
	Interoffice Transport - Dedicated - DS1 combintion - Facility Termination per month			UNC1X	U1TF1	77.86	171.24	113.12	70.07	30.90			20.35	21.09	9.80	10.54
	Channelization - Channel System DS1 to DS0 combination - per month			UNC1X	MQ1	80.77	105.76	14.48	3.04	2.74			20.35	21.09	9.80	10.54
	2-wire ISDN COCI (BRITE) - DS1 to DS0 Channel System combination - per month			UNCNX	UC1CA	3.24	5.70	4.42					20.35	21.09	9.80	10.54
	Additional 2-wire ISDN Loop in same DS1Interoffice Transport Combination - Zone 1		1	UNCNX	U1L2X	22.22	108.76	35.47	72.94	10.86			20.35	21.09	9.80	10.54
	Additional 2-wire ISDN Loop in same DS1Interoffice Transport Combination - Zone 2		2	UNCNX	U1L2X	29.02	108.76	35.47	72.94	10.86			20.35	21.09	9.80	10.54
	Additional 2-wire ISDN Loop in same DS1Interoffice Transport Combination - Zone 3		3	UNCNX	U1L2X	37.95	108.76	35.47	72.94	10.86			20.35	21.09	9.80	10.54
	2-wire ISDN COCI (BRITE) - DS1 to DS0 Channel System combintaion- per month			UNCNX	UC1CA	3.24	5.70	4.42					20.35	21.09	9.80	10.54
	Nonrecurring Currently Combined Network Elements Switch -As-Is Charge			UNC1X	UNCCC		52.73	24.62	9.12	9.12			20.35	21.09	9.80	10.54
	4-WIRE DS1 DIGITAL EXTENDED LOOP WITH DEDICATED STS-1 INTEROFFICE TRANSPORT (EEL)															
	First DS1 Loop in STS1 Interoffice Transport Combination - Zone 1		1	UNC1X	USLXX	57.73	228.40	161.74	79.87	24.88			20.35	21.09	9.80	10.54
	First DS1 Loop in STS1 Interoffice Transport Combination - Zone 2		2	UNC1X	USLXX	75.40	228.40	161.74	79.87	24.88			20.35	21.09	9.80	10.54
	First DS1 Loop in STS1 Interoffice Transport Combination - Zone 3		3	UNC1X	USLXX	98.59	228.40	161.74	79.87	24.88			20.35	21.09	9.80	10.54
	Interoffice Transport - Dedicated - STS1 combination - Per Mile Per Month			UNCSX	1L5XX	2.34										
	Interoffice Transport - Dedicated - STS1 combination - Facility Termination			UNCSX	U1TFS	849.30	482.01	153.81	64.43	35.43			20.35	21.09	9.80	10.54
	STS1 to DS1 Channel System conbination per month			UNCSX	MQ3	222.98	156.02	49.41	17.12	6.77			20.35	21.09	9.80	10.54
	DS3 Interface Unit (DS1 COCI) combination per month			UNC1X	UC1D1	17.58	5.70	4.42					20.35	21.09	9.80	10.54
	Additional DS1Loop in STS1 Interoffice Transport Combination - Zone 1		1	UNC1X	USLXX	57.73	228.40	161.74	79.87	24.88			20.35	21.09	9.80	10.54
	Additional DS1Loop in STS1 Interoffice Transport Combination - Zone 2		2	UNC1X	USLXX	75.40	228.40	161.74	79.87	24.88			20.35	21.09	9.80	10.54
	Additional DS1Loop in STS1 Interoffice Transport Combination - Zone 3		3	UNC1X	USLXX	98.59	228.40	161.74	79.87	24.88			20.35	21.09	9.80	10.54
	DS3 Interface Unit (DS1 COCI) combination per month			UNC1X	UC1D1	17.58	5.70	4.42					20.35	21.09	9.80	10.54
	Nonrecurring Currently Combined Network Elements Switch -As-Is Charge			UNCSX	UNCCC		52.73	24.62	9.12	9.12			20.35	21.09	9.80	10.54
	4-WIRE 56 KBPS DIGITAL EXTENDED LOOP WITH 56 KBPS INTEROFFICE TRANSPORT (EEL)															
	4-wire 56 kbps Loop/4-wire 56 kbps Interoffice Transport Combination - Zone 1		1	UNCDX	UDL56	31.10	108.76	35.47	72.94	10.86			20.35	21.09	9.80	10.54
	4-wire 56 kbps Loop/4-wire 56 kbps Interoffice Transport Combination - Zone 2		2	UNCDX	UDL56	40.61	108.76	35.47	72.94	10.86			20.35	21.09	9.80	10.54
	4-wire 56 kbps Loop/4-wire 56 kbps Interoffice Transport Combination - Zone 3		3	UNCDX	UDL56	53.11	108.76	35.47	72.94	10.86			20.35	21.09	9.80	10.54
	Interoffice Transport - Dedicated - 4-wire 56 kbps combination - Per Mile			UNCDX	1L5XX	0.0174										
	Interoffice Transport - Dedicated - 4-wire 56 kbps combination - Facility Termination			UNCDX	U1TD5	21.19	79.83	44.08	69.32	31.00			20.35	21.09	9.80	10.54
	Nonrecurring Currently Combined Network Elements Switch -As-Is Charge			UNCDX	UNCCC		52.73	24.62	9.12	9.12			20.35	21.09	9.80	10.54
	4-WIRE 64 KBPS DIGITAL EXTENDED LOOP WITH 64 KBPS INTEROFFICE TRANSPORT (EEL)															

CATEGORY	RATE ELEMENTS	Interim	Zone	BCS	USOC	RATES ($)					Svc Order Submitted Elec per LSR	Svc Order Submitted Manually per LSR	Attachment: 2 Incremental Charge - Manual Svc Order vs. Electronic-1st	Attachment: 2 Incremental Charge - Manual Svc Order vs. Electronic-Add'l	Exhibit: B Incremental Charge - Manual Svc Order vs. Electronic-Disc 1st	Exhibit: B Incremental Charge - Manual Svc Order vs. Electronic-Disc Add'l
						Rec	Nonrecurring		Nonrecurring Disconnect		OSS Rates($)					
							First	Add'l	First	Add'l	SOMEC	SOMAN	SOMAN	SOMAN	SOMAN	SOMAN
	4-wire 64 kbps Loop/4-wire 64 kbps Interoffice Transport Combination - Zone 1		1	UNCDX	UDL64	31.10	108.76	35.47	72.94	10.86			20.35	21.09	9.80	10.54
	4-wire 64 kbps Loop/4-wire 64 kbps Interoffice Transport Combination - Zone 2		2	UNCDX	UDL64	40.61	108.76	35.47	72.94	10.86			20.35	21.09	9.80	10.54
	4-wire 64 kbps Loop/4-wire 64 kbps Interoffice Transport Combination - Zone 3		3	UNCDX	UDL64	53.11	108.76	35.47	72.94	10.86			20.35	21.09	9.80	10.54
	Interoffice Transport - Dedicated - 4-wire 64 kbps combination - Per Mile			UNCDX	1L5XX	0.0174										
	Interoffice Transport - Dedicated - 4-wire 64 kbps combination - Facility Termination			UNCDX	U1TD6	21.19	79.83	44.08	69.32	31.00			20.35	21.09	9.80	10.54
	Nonrecurring Currently Combined Network Elements Switch -As-Is Charge			UNCDX	UNCCC		52.73	24.62	9.12	9.12			20.35	21.09	9.80	10.54
ADDITIONAL NETWORK ELEMENTS																
	When used as a part of a currently combined facility, the non-recurrng charges do not apply, but a Switch As Is charge does apply.															
	When used as ordinarily combined network elements in All States, the non-recurring charges apply and the Switch As Is Charge does not.															
	Nonrecurring Currently Combined Network Elements "Switch As Is" Charge (One applies to each combination)															
	Nonrecurring Currently Combined Network Elements Switch -As-Is Charge - 2 wire/4-Wire VG			UNCVX	UNCCC		52.73	24.62	9.12	9.12			20.35	21.09	9.80	10.54
	Nonrecurring Currently Combined Network Elements Switch -As-Is Charge - 56/64 kbps			UNCDX	UNCCC		52.73	24.62	9.12	9.12			20.35	21.09	9.80	10.54
	Nonrecurring Currently Combined Network Elements Switch -As-Is Charge - DS1			UNC1X	UNCCC		52.73	24.62	9.12	9.12			20.35	21.09	9.80	10.54
	Nonrecurring Currently Combined Network Elements Switch -As-Is Charge - DS3			UNC3X	UNCCC		52.73	24.62	9.12	9.12			20.35	21.09	9.80	10.54
	Nonrecurring Currently Combined Network Elements Switch -As-Is Charge - STS1			UNCSX	UNCCC		52.73	24.62	9.12	9.12			20.35	21.09	9.80	10.54
	NOTE: Local Channel - Dedicated Transport - minimum billing period - Below DS3=one month, DS3 and above=four months															
	Local Channel - Dedicated - 2-Wire Voice Grade Zone 1		1	UNCVX	ULDV2	17.18	108.76	35.47	72.94	10.86			20.35	21.09	9.80	10.54
	Local Channel - Dedicated - 2-Wire Voice Grade Zone 2		2	UNCVX	ULDV2	22.44	108.76	35.47	72.94	10.86			20.35	21.09	9.80	10.54
	Local Channel - Dedicated - 2-Wire Voice Grade Zone 3		3	UNCVX	ULDV2	29.34	108.76	35.47	72.94	10.86			20.35	21.09	9.80	10.54
	Local Channel - Dedicated - 4-Wire Voice Grade Zone 1		1	UNCVX	ULDV4	18.18	108.76	35.47	72.94	10.86			20.35	21.09	9.80	10.54
	Local Channel - Dedicated - 4-Wire Voice Grade Zone 2		2	UNCVX	ULDV4	23.74	108.76	35.47	72.94	10.86			20.35	21.09	9.80	10.54
	Local Channel - Dedicated - 4-Wire Voice Grade Zone 3		3	UNCVX	ULDV4	31.05	108.76	35.47	72.94	10.86			20.35	21.09	9.80	10.54
	Local Channel - Dedicated - DS1 per month Zone 1		1	UNC1X	ULDF1	36.24	228.40	161.74	79.87	24.88			20.35	21.09	9.80	10.54
	Local Channel - Dedicated -DS1 Per Month Zone 2		2	UNC1X	ULDF1	47.33	228.40	161.74	79.87	24.88			20.35	21.09	9.80	10.54
	Local Channel - Dedicated - DS1- Per Month Zone 3		3	UNC1X	ULDF1	61.89	228.40	161.74	79.87	24.88			20.35	21.09	9.80	10.54
	Local Channel - Dedicated - DS3 - Per Mile per month			UNC3X	1L5NC	7.15										
	Local Channel - Dedicated - DS3 - Facility Termination			UNC3X	ULDF3	611.30	595.37	304.50	215.82	151.15			20.35	21.09	9.80	10.54
	Local Channel - Dedicated - STS-1- Per Mile per month			UNCSX	1L5NC	7.15										
	Local Channel - Dedicated - STS-1 - Facility Termination			UNCSX	ULDFS	599.59	588.07	297.20	215.82	151.15			20.35	21.09	9.80	10.54
	Clear Channel Capability (SF/ESF) Option - Subsequent Activity - per DS1	I		ULDD1, U1TD1, UNC1X, USL	NRCCC		65.09						20.35	10.54		
	C-bit Parity Option - Subsequent Activity - per DS3	i		U1TD3, ULDD3, UE3, UNC3X	NRCC3		50.09						20.35	10.54		
	MULTIPLEXERS															
	NOTE: minimum billing period is one month for DS1 to DS0 Channel System and interfaces															
	NOTE: minimum billing period is three months for DS3 to DS1Channel System and interfaces															
	DS1 to DS0 Channel System (with the higher-level connected to a collocation in the same SWC) per month			UXTD1	MQ1	80.77	141.67	77.11	14.51	13.46			20.35	9.80	11.49	1.18
	DS1 to DS0 Channel System (used to channelize a DS1 Local Channel) per month			ULDD1	MQ1	80.77	141.67	77.11	14.51	13.46			20.35	9.80	11.49	1.18
	DS1 to DS0 Channel System (used to channelize a DS1 Interoffice Channel) per month			U1TD1	MQ1	80.77	141.67	77.11	14.51	13.46			20.35	9.80	11.49	1.18
	OCU-DP COCI (data) - DS1 to DS0 Channel System - per month (2.4-64kbs) used for a Local Loop			UDL	1D1DD	1.82	6.07	4.66					20.35	9.80	11.49	1.18
	OCU-DP COCI (data) - DS1 to DS0 Channel System - per month (2.4-64kbs) used for connection to a channelized DS1 Local Channel in the same SWC as collocation			U1TUD	1D1DD	1.82	6.07	4.66					20.35	9.80	11.49	1.18

UNBUNDLED NETWORK ELEMENTS - Tennessee														Attachment: 2		Exhibit: B	
CATEGORY		RATE ELEMENTS	Interim	Zone	BCS	USOC	RATES ($)					Svc Order Submitted Elec per LSR	Svc Order Submitted Manually per LSR	Incremental Charge - Manual Svc Order vs. Electronic-1st	Incremental Charge - Manual Svc Order vs. Electronic-Add'l	Incremental Charge - Manual Svc Order vs. Electronic-Disc 1st	Incremental Charge - Manual Svc Order vs. Electronic-Disc Add'l
							Rec	Nonrecurring		Nonrecurring Disconnect		OSS Rates($)					
								First	Add'l	First	Add'l	SOMEC	SOMAN	SOMAN	SOMAN	SOMAN	SOMAN
		2-wire ISDN COCI (BRITE) - DS1 to DS0 Channel Systsem - per month for a Local Loop			UDN	UC1CA	3.10	6.07	4.66					20.35	9.80	11.49	1.18
		2-wire ISDN COCI (BRITE) - DS1 to DS0 Channel Systsem - per month used for connection to a channelized DS1 Local Channel in the same SWC as collocation			U1TUB	UC1CA	3.10	6.07	4.66					20.35	9.80	11.49	1.18
		Voice Grade COCI - DS1 to DS0 Channel System - per month used for a Local Loop			UEA	1D1VG	0.91	6.07	4.66					20.35	9.80	11.49	1.18
		Voice Grade COCI - DS1 to DS0 Channel System - per month used for connection to a channelized DS1 Local Channel in the same SWC as collocation			U1TUC	1D1VG	0.91	6.07	4.66					20.35	9.80	11.49	1.18
		DS3 to DS1 Channel System (with the higher level connected to a collocation in the same SWC) per month			UXTD3	MQ3	222.98	308.03	108.47	44.47	42.62			20.35	9.80	11.49	1.18
		DS3 to DS1 Channel System (used to channelize a DS3 Local Channel) per month			ULDD3	MQ3	222.98	308.03	108.47	44.47	42.62			20.35	21.09	9.80	9.80
		DS3 to DS1 Channel System (used to channelize a DS3 Interoffice Channel per month			U1TD3	MQ3	222.98	308.03	108.47	44.47	42.62			20.35	21.09	9.80	9.80
		STS-1 to DS1 Channel System (with the higher level connected to a collocation in the same SWC) per month			UXTS1	MQ3	222.98	308.03	108.47	44.47	42.62			20.35	21.09	9.80	9.80
		STS-1 to DS1 Channel System (used to channelize a STS-1 Local Channel) per month			ULDS1	MQ3	222.98	308.03	108.47	44.47	42.62			20.35	21.09	9.80	9.80
		STS-1 to DS1 Channel System (used to channelize a STS-1 Interoffice Channel) per month			U1TS1	MQ3	222.98	308.03	108.47	44.47	42.62			20.35	21.09	9.80	9.80
		DS1 COCI used with Loop per month			USL	UC1D1	17.58	6.07	4.66					20.35	9.80	11.49	1.18
		DS1 COCI (used for connection to a channelized DS1 Local Channel in the same SWC as collocation) per month			U1TUA	UC1D1	17.58	6.07	4.66					20.35	9.80	11.49	1.18
		DS1 COCI used with Interoffice Channel per month			U1TD1	UC1D1	17.58	6.07	4.66					20.35	9.80	11.49	1.18
	Sub-Loop Feeder																
		Unbundled Sub-Loop Feeder Loop, 4-Wire DS1 - Zone 1		1	UNC1X	USBFG	39.74	116.00	40.62	106.82	18.91						
		Unbundled Sub-Loop Feeder Loop, 4-Wire DS1 - Zone 2		2	UNC1X	USBFG	51.90	116.00	40.62	106.82	18.91						
		Unbundled Sub-Loop Feeder Loop, 4-Wire DS1 - Zone 3		3	UNC1X	USBFG	67.86	116.00	40.62	106.82	18.91						
UNBUNDLED LOCAL EXCHANGE SWITCHING(PORTS)																	
	Exchange Ports																
	NOTE: Although the Port Rate includes all available features in GA, KY, LA & TN, the desired features will need to be ordered using retail USOCs																
	2-WIRE VOICE GRADE LINE PORT RATES (RES)																
		Exchange Ports - 2-Wire Analog Line Port- Res.			UEPSR	UEPRL	1.89	9.93	9.19	3.66	2.92			20.35	10.54	13.32	1.40
		Exchange Ports - 2-Wire Analog Line Port with Caller ID - Res.			UEPSR	UEPRC	1.89	9.93	9.19	3.66	2.92			20.35	10.54	13.32	1.40
		Exchange Ports - 2-Wire Analog Line Port outgoing only - Res.			UEPSR	UEPRO	1.89	9.93	9.19	3.66	2.92			20.35	10.54	13.32	1.40
		Exchange Ports - 2-Wire VG unbundled TN extended local dialing parity Port with Caller ID - Res.			UEPSR	UEPAQ	1.89	9.93	9.19	3.66	2.92			20.35	10.54	13.32	1.40
		Exchange Ports - 2-Wire VG unbundled Tennessee Area Plus with Caller ID - Res (AC7)			UEPSR	UEPAH	1.89	9.93	9.19	3.66	2.92			20.35	10.54	13.32	1.40
		Exchange Ports - 2-Wire VG unbundled Tennessee Area Calling port with Caller ID - Res (F2R)			UEPSR	UEPAK	1.89	9.93	9.19	3.66	2.92			20.35	10.54	13.32	1.40
		Exchange Ports - 2-Wire VG unbundled Tennessee Area Calling port with Caller ID - Res (TACER)			UEPSR	UEPAL	1.89	9.93	9.19	3.66	2.92			20.35	10.54	13.32	1.40
		Exchange Ports - 2-Wire VG unbundled Tennessee Area Calling port with Caller ID - Res (TACSR)			UEPSR	UEPAM	1.89	9.93	9.19	3.66	2.92			20.35	10.54	13.32	1.40
		Exchange Ports - 2-Wire VG unbundled Tennessee Area Calling port with Caller ID - Res (1MF2X)			UEPSR	UEPAN	1.89	9.93	9.19	3.66	2.92			20.35	10.54	13.32	1.40
		Exchange Ports - 2-Wire VG unbundled Tennessee Area Calling port with Caller ID - Res (2MR)			UEPSR	UEPAO	1.89	9.93	9.19	3.66	2.92			20.35	10.54	13.32	1.40
		Exchange Ports - 2-Wire VG unbundled res, low usage line port with Caller ID (LUM)			UEPSR	UEPAP	1.89	9.93	9.19	3.66	2.92			20.35	10.54	13.32	1.40
		Exchange Port - 2-Wire VG Tennessee Residence Dialing Plan without Caller ID			UEPSR	UEPWN	1.89	9.93	9.19	3.66	2.92			20.35	10.54	13.32	1.40
		Exchange Port - 2-Wire VG Tennessee Residence Area Plus without Caller ID			UEPSR	UEPRR	1.89	9.93	9.19	3.66	2.92			20.35	10.54	13.32	1.40

UNBUNDLED NETWORK ELEMENTS - Tennessee														Attachment: 2		Exhibit: B	
CATEGORY		RATE ELEMENTS	Interim	Zone	BCS	USOC	RATES ($)					Svc Order Submitted Elec per LSR	Svc Order Submitted Manually per LSR	Incremental Charge - Manual Svc Order vs. Electronic-1st	Incremental Charge - Manual Svc Order vs. Electronic-Add'l	Incremental Charge - Manual Svc Order vs. Electronic-Disc 1st	Incremental Charge - Manual Svc Order vs. Electronic-Disc Add'l
							Rec	Nonrecurring		Nonrecurring Disconnect		OSS Rates($)					
								First	Add'l	First	Add'l	SOMEC	SOMAN	SOMAN	SOMAN	SOMAN	SOMAN
		2-Wire voice unbundled Low Usage Line Port without Caller ID Capability			UEPSR	UEPRT	1.89	9.93	9.19	3.66	2.92			20.35	10.54	13.32	1.40
		Subsequent Activity			UEPSR	USASC	0.00	0.00	0.00					20.35	10.54	13.32	1.40
	FEATURES																
		All Available Vertical Features			UEPSR	UEPVF	0.00	0.00	0.00					20.35	10.54	13.32	1.40
	2-WIRE VOICE GRADE LINE PORT RATES (BUS)																
		Exchange Ports - 2-Wire Analog Line Port without Caller ID - Bus			UEPSB	UEPBL	1.89	9.93	9.19	3.66	2.92			20.35	10.54	13.32	1.40
		Exchange Ports - 2-Wire VG unbundled Line Port with unbundled port with Caller+E484 ID - Bus.			UEPSB	UEPBC	1.89	9.93	9.19	3.66	2.92			20.35	10.54	13.32	1.40
		Exchange Ports - 2-Wire Analog Line Port outgoing only - Bus.			UEPSB	UEPBO	1.89	9.93	9.19	3.66	2.92			20.35	10.54	13.32	1.40
		Exchange Ports - 2-Wire VG unbundled TN extended local dialing parity Port with Caller ID - Bus.			UEPSB	UEPAV	1.89	9.93	9.19	3.66	2.92			20.35	10.54	13.32	1.40
		Exhange Ports - 2-Wire VG unbundled incoming only port with Caller ID - Bus			UEPSB	UEPB1	1.89	9.93	9.19	3.66	2.92			20.35	10.54	13.32	1.40
		Exchange Ports - 2-Wire VG unbundled TN Bus 2-Way Area Calling Port Economy Option - Bus (TACC1)			UEPSB	UEPAC	1.89	9.93	9.19	3.66	2.92			20.35	10.54	13.32	1.40
		Exchange Ports - 2-Wire VG unbundled TN Bus 2-Way Area Calling Port Standard Option - Bus (TACC2)			UEPSB	UEPAD	1.89	9.93	9.19	3.66	2.92			20.35	10.54	13.32	1.40
		Exchange Ports - 2-W VG unbundled TN Bus 2-Way Collierville & Memphis Local Calling Port - Bus (B2F)			UEPSB	UEPAE	1.89	9.93	9.19	3.66	2.92			20.35	10.54	13.32	1.40
		Exchange Ports - 2-W VG unbundled TN Bus 2-Way Collierville & Memphis Local Calling Port			UEPSB	UEPB2	1.89	9.93	9.19	3.66	2.92			20.35	10.54	13.32	1.40
		Exchange Ports - 2-W VG unbundled TN, Business Line Inward, Collierville & Memphis Local Calling Plan			UEPSB	UEPB3	1.89	9.93	9.19	3.66	2.92			20.35	10.54	13.32	1.40
		Exchange Ports - 2-Wire Voice Tennessee Business Dialing Plan without Caller ID			UEPSB	UEPWO	1.89	9.93	9.19	3.66	2.92			20.35	10.54	13.32	1.40
		2-Wire voice unbundled Incoming Only Port without Caller ID Capability			UEPSB	UEPBE	1.89	9.93	9.19	3.66	2.92			20.35	10.54	13.32	1.40
		Subsequent Activity			UEPSB	USASC	0.00	0.00	0.00					20.35	10.54	13.32	1.40
	FEATURES																
		All Available Vertical Features			UEPSB	UEPVF	0.00	0.00	0.00					20.35	10.54	13.32	1.40
	EXCHANGE PORT RATES (DID & PBX)																
		2-Wire VG Unbundled 2-Way PBX Trunk - Res			UEPSE	UEPRD	1.79	9.93	9.19	3.66	2.92			20.35	10.54	13.32	1.40
		2-Wire VG Line Side Unbundled 2-Way PBX Trunk - Bus			UEPSP	UEPPC	1.79	9.93	9.19	3.66	2.92			20.35	10.54	13.32	1.40
		2-Wire VG Line Side Unbundled Outward PBX Trunk - Bus			UEPSP	UEPPO	1.79	9.93	9.19	3.66	2.92			20.35	10.54	13.32	1.40
		2-Wire VG Line Side Unbundled Incoming PBX Trunk - Bus			UEPSP	UEPP1	1.79	9.93	9.19	3.66	2.92			20.35	10.54	13.32	1.40
		2-Wire Analog Long Distance Terminal PBX Trunk - Bus			UEPSP	UEPLD	1.79	9.93	9.19	3.66	2.92			20.35	10.54	13.32	1.40
		2-Wire Analog TN 2-Way Calling Plan PBX Trunk - Bus			UEPSP	UEPT2	1.79	9.93	9.19	3.66	2.92			20.35	10.54	13.32	1.40
		2-Wire TN Outward Calling Plan PBX Trunk - Bus			UEPSP	UEPTO	1.79	9.93	9.19	3.66	2.92			20.35	10.54	13.32	1.40
		2-Wire Voice Unbundled PBX LD Terminal Ports			UEPSP	UEPLD	1.79	9.93	9.19	3.66	2.92			20.35	10.54	13.32	1.40
		2-Wire Voice Unbundled 2-Way PBX Tennessee Calling Port			UEPSP	UEPT2	1.79	9.93	9.19	3.66	2.92			20.35	10.54	13.32	1.40
		2-Wire Voice Unbundled 1-Way Outgoing PBX Tennessee Calling Port			UEPSP	UEPTO	1.79	9.93	9.19	3.66	2.92			20.35	10.54	13.32	1.40
		2-Wire Vice Unbundled 2-Way PBX Usage Port			UEPSP	UEPXA	1.79	9.93	9.19	3.66	2.92			20.35	10.54	13.32	1.40
		2-Wire Voice Unbundled PBX Toll Terminal Hotel Ports			UEPSP	UEPXB	1.79	9.93	9.19	3.66	2.92			20.35	10.54	13.32	1.40
		2-Wire Voice Unbundled PBX LD DDD Terminals Port			UEPSP	UEPXC	1.79	9.93	9.19	3.66	2.92			20.35	10.54	13.32	1.40
		2-Wire Voice Unbundled PBX LD Terminal Switchboard Port			UEPSP	UEPXD	1.79	9.93	9.19	3.66	2.92			20.35	10.54	13.32	1.40
		2-Wire Voice Unbundled PBX LD Terminal Switchboard IDD Capable Port			UEPSP	UEPXE	1.79	9.93	9.19	3.66	2.92			20.35	10.54	13.32	1.40
		2-Wire Voice Unbundled 2-Way PBX Hotel/Hospital Economy Administrative Calling Port			UEPSP	UEPXL	1.79	9.93	9.19	3.66	2.92			20.35	10.54	13.32	1.40
		2-Wire Voice Unbundled 2-Way PBX Hotel/Hospital Economy Room Calling Port			UEPSP	UEPXM	1.79	9.93	9.19	3.66	2.92			20.35	10.54	13.32	1.40
		2-W Voice Unbundled 1-Way Out PBX Hotel/Hospital Economy Administrative Calling Port TN Calling Port			UEPSP	UEPXN	1.79	9.93	9.19	3.66	2.92			20.35	10.54	13.32	1.40
		2-Wire Voice Unbundled 1-Way Outgoing PBX Hotel/Hospital Discount Room Calling Port			UEPSP	UEPXO	1.79	9.93	9.19	3.66	2.92			20.35	10.54	13.32	1.40

UNBUNDLED NETWORK ELEMENTS - Tennessee													Attachment: 2		Exhibit: B	
CATEGORY	RATE ELEMENTS	Interim	Zone	BCS	USOC	RATES ($)					Svc Order Submitted Elec per LSR	Svc Order Submitted Manually per LSR	Incremental Charge - Manual Svc Order vs. Electronic-1st	Incremental Charge - Manual Svc Order vs. Electronic-Add'l	Incremental Charge - Manual Svc Order vs. Electronic-Disc 1st	Incremental Charge - Manual Svc Order vs. Electronic-Disc Add'l
						Rec	Nonrecurring		Nonrecurring Disconnect		OSS Rates($)					
							First	Add'l	First	Add'l	SOMEC	SOMAN	SOMAN	SOMAN	SOMAN	SOMAN
	Unbundled Exchange Ports, PBX Trunk Combination, Collierville and Memphis Local Calling Plan			UEPSP	UEPA6	1.79	9.93	9.19	3.66	2.92			20.35	10.54	13.32	1.40
	Unbundled Exchange Ports, PBX Trunk Combination, first trunk, Collierville and Memphis Local Calling Plan			UEPSP	UEPA7	1.79	9.93	9.19	3.66	2.92			20.35	10.54	13.32	1.40
	2-Wire Voice Unbundled 1-Way Outgoing PBX Measured Port			UEPSP	UEPXS	1.79	9.93	9.19	3.66	2.92			20.35	10.54	13.32	1.40
	2-Wire Voice Unbundled PBX Collierville and Memphis Calling Port			UEPSP	UEPXU	1.79	9.93	9.19	3.66	2.92			20.35	10.54	13.32	1.40
	2-Wire Voice Unbundled 2-Way PBX Tennessee RegionServ Calling Port			UEPSP	UEPXV	1.79	9.93	9.19	3.66	2.92			20.35	10.54	13.32	1.40
	Subsequent Activity			UEPSP	USASC	0.00	0.00	0.00					20.35	10.54	13.32	1.40
FEATURES																
	All Available Vertical Features			UEPSP UEPSE	UEPVF	0.00	0.00	0.00					20.35	10.54	13.32	1.40
EXCHANGE PORT RATES (COIN)																
	Exchange Ports - Coin Port					2.11	9.93	9.19	3.66	2.92			20.35	10.54	13.32	1.40
NOTE: Transmission/usage charges associated with POTS circuit switched usage will also apply to circuit switched voice and/or circuit switched data transmission by B-Channels associated with 2-wire ISDN ports.																
NOTE: Access to B Channel or D Channel Packet capabilities will be available only through BFR/New Business Request Process. Rates for the packet capabilities will be determined via the Bona Fide Request/New Business Request Process.																
UNBUNDLED LOCAL EXCHANGE SWITCHING(PORTS)																
EXCHANGE PORT RATES																
	Exchange Ports - 2-Wire DID Port			UEPEX	UEPP2	8.97	47.75	47.01	9.21	8.47			20.35	10.54	13.32	1.40
	Exchange Ports - DDITS Port - 4-Wire DS1 Port with DID capability			UEPDD	UEPDD	35.74	75.93	38.15	8.77	8.04			20.35	10.54	13.32	1.40
	Exchange Ports - 2-Wire ISDN Port (See Notes below.)			UEPTX UEPSX	U1PMA	16.26	30.23	29.49	4.10	4.10			20.35	10.54	13.32	1.40
NOTE: Transmission/usage charges associated with POTS circuit switched usage will also apply to circuit switched voice and/or circuit switched data transmission by B-Channels associated with 2-wire ISDN ports.																
NOTE: Access to B Channel or D Channel Packet capabilities will be available only through BFR/New Business Request Process. Rates for the packet capabilities will be determined via the Bona Fide Request/New Business Request Process.																
	Exchange Ports - 2-Wire ISDN Port -- Channel Profiles			UEPTX UEPSX	U1UMA	0.00	0.00	0.00								
	Exchange Ports - 4-Wire ISDN DS1 Port			UEPEX	UEPEX	75.04	148.66	147.18	38.46	36.98			20.35	10.54	13.32	1.40
UNBUNDLED PORT with REMOTE CALL FORWARDING CAPABILITY																
UNBUNDLED REMOTE CALL FORWARDING SERVICE - RESIDENCE																
	Unbundled Remote Call Forwarding Service, Area Calling, Res			UEPVR	UERAC	1.89	9.93	9.19	3.66	2.92			20.35	10.54	13.32	1.40
	Unbundled Remote Call Forwarding Service, Local Calling - Res			UEPVR	UERLC	1.89	9.93	9.19	3.66	2.92			20.35	10.54	13.32	1.40
	Unbundled Remote Call Forwarding Service, InterLATA - Res			UEPVR	UERTE	1.89	9.93	9.19	3.66	2.92			20.35	10.54	13.32	1.40
	Unbundled Remote Call Forwarding Service, IntraLATA - Res			UEPVR	UERTR	1.89	9.93	9.19	3.66	2.92			20.35	10.54	13.32	1.40
Non-Recurring																
	Unbundled Remote Call Forwarding Service - Conversion - Switch-as-is			UEPVR	USAC2		1.03	0.29					20.35	10.54	13.32	1.40
	Unbundled Remote Call Forwarding Service - Conversion with allowed change (PIC and LPIC)			UEPVR	USACC		1.03	0.29								
UNBUNDLED REMOTE CALL FORWARDING - Bus																
	Unbundled Remote Call Forwarding Service, Area Calling - Bus			UEPVB	UERAC	1.89	9.93	9.19	3.66	2.92			20.35	10.54	13.32	1.40
	Unbundled Remote Call Forwarding Service, Local Calling - Bus			UEPVB	UERLC	1.89	9.93	9.19	3.66	2.92			20.35	10.54	13.32	1.40
	Unbundled Remote Call Forwarding Service, InterLATA - Bus			UEPVB	UERTE	1.89	9.93	9.19	3.66	2.92			20.35	10.54	13.32	1.40
	Unbundled Remote Call Forwarding Service, IntraLATA - Bus			UEPVB	UERTR	1.89	9.93	9.19	3.66	2.92			20.35	10.54	13.32	1.40
	Unbundled Remote Call Forwarding Service Expanded and Exception Local Calling			UEPVB	UERVJ	1.89	9.93	9.19	3.66	2.92			20.35	10.54	13.32	1.40
Non-Recurring																
	Unbundled Remote Call Forwarding Service - Conversion - Switch-as-is			UEPVB	USAC2		1.03	0.29					20.35	10.54	13.32	1.40
	Unbundled Remote Call Forwarding Service - Conversion with allowed change (PIC and LPIC)			UEPVB	USACC		1.03	0.29								
UNBUNDLED LOCAL SWITCHING, PORT USAGE																
End Office Switching (Port Usage)																
	End Office Switching Function, Per MOU					0.0008041										
Tandem Switching (Port Usage) (Local or Access Tandem)																
	Tandem Switching Function Per MOU					0.0009778										
Common Transport																
	Common Transport - Per Mile, Per MOU					0.0000064										

UNBUNDLED NETWORK ELEMENTS - Tennessee													Attachment: 2		Exhibit: B	
CATEGORY	RATE ELEMENTS	Interim	Zone	BCS	USOC	RATES ($)					Svc Order Submitted Elec per LSR	Svc Order Submitted Manually per LSR	Incremental Charge - Manual Svc Order vs. Electronic-1st	Incremental Charge - Manual Svc Order vs. Electronic-Add'l	Incremental Charge - Manual Svc Order vs. Electronic-Disc 1st	Incremental Charge - Manual Svc Order vs. Electronic-Disc Add'l
						Rec	Nonrecurring		Nonrecurring Disconnect		OSS Rates($)					
							First	Add'l	First	Add'l	SOMEC	SOMAN	SOMAN	SOMAN	SOMAN	SOMAN
	Common Transport - Facilities Termination Per MOU					0.0003871										
UNBUNDLED PORT/LOOP COMBINATIONS - COST BASED RATES																
	Cost Based Rates are applied where BellSouth is required by FCC and/or State Commission rule to provide Unbundled Local Switching or Switch Ports.															
	Features shall apply to the Unbundled Port/Loop Combination - Cost Based Rate section in the same manner as they are applied to the Stand-Alone Unbundled Port section of this Rate Exhibit.															
	End Office and Tandem Switching Usage and Common Transport Usage rates in the Port section of this rate exhibit shall apply to all combinations of loop/port network elements except for UNE Coin Port/Loop Combinations.															
	The first and additional Port nonrecurring charges apply to Not Currently Combined Combos. For Currently Combined Combos the nonrecurring charges shall be those identified in the Nonrecurring - Currently Combined sections.															
	2-WIRE VOICE GRADE LOOP WITH 2-WIRE LINE PORT (RES)															
	UNE Port/Loop Combination Rates															
	2-Wire VG Loop/Port Combo - Zone 1		1			14.18										
	2-Wire VG Loop/Port Combo - Zone 2		2			18.01										
	2-Wire VG Loop/Port Combo - Zone 3		3			23.02										
	UNE Loop Rates															
	2-Wire Voice Grade Loop (SL1) - Zone 1		1	UEPRX	UEPLX	12.48										
	2-Wire Voice Grade Loop (SL1) - Zone 2		2	UEPRX	UEPLX	16.31										
	2-Wire Voice Grade Loop (SL1) - Zone 3		3	UEPRX	UEPLX	21.32										
	2-Wire Voice Grade Line Port Rates (Res)															
	2-Wire voice unbundled port - residence			UEPRX	UEPRL	1.70	22.14	15.25	8.45	3.91		15.69				
	2-Wire voice unbundled port with Caller ID - res			UEPRX	UEPRC	1.70	22.14	15.25	8.45	3.91		15.69				
	2-Wire voice unbundled port outgoing only - res			UEPRX	UEPRO	1.70	22.14	15.25	8.45	3.91		15.69				
	2-Wire voice Grade unbundled Tennessee extended local dialing parity port with Caller ID - res			UEPRX	UEPAQ	1.70	22.14	15.25	8.45	3.91		15.69				
	2-Wire voice unbundled Tennessee Area Plus with Caller ID - res (AC7)			UEPRX	UEPAH	1.70	22.14	15.25	8.45	3.91		15.69				
	2-Wire voice unbundled Tennessee Area Calling port with Caller ID - res (F2R)			UEPRX	UEPAK	1.70	22.14	15.25	8.45	3.91		15.69				
	2-Wire voice unbundled Tennessee Area Calling port with Caller ID - res (TACER)			UEPRX	UEPAL	1.70	22.14	15.25	8.45	3.91		15.69				
	2-Wire voice unbundled Tennessee Area Calling port with Caller ID - res (TACSR)			UEPRX	UEPAM	1.70	22.14	15.25	8.45	3.91		15.69				
	2-Wire voice unbundled Tennessee Area Calling port with Caller ID - res (1MF2X)			UEPRX	UEPAN	1.70	22.14	15.25	8.45	3.91		15.69				
	2-Wire voice unbundled Tennessee Area Calling port with Caller ID - res (2MR)			UEPRX	UEPAO	1.70	22.14	15.25	8.45	3.91		15.69				
	2-Wire voice unbundles res, low usage line port with Caller ID (LUM)			UEPRX	UEPAP	1.70	22.14	15.25	8.45	3.91		15.69				
	2-Wire Voice Unbundled Tennessee Residence Dialing Plan without Caller ID			UEPRX	UEPWN	1.70	22.14	15.25	8.45	3.91		15.69				
	2-Wire voice unbundled Tennessee Area Plus Port without Caller ID Capability			UEPRX	UEPRR	1.70	22.14	15.25	8.45	3.91		15.69				
	2-Wire voice unbundled Low Usage Line Port without Caller ID Capability			UEPRX	UEPRT	1.70	22.14	15.25	8.45	3.91		15.69				
	FEATURES															
	All Features Offered			UEPRX	UEPVF	0.00	0.00	0.00				15.69				
	LOCAL NUMBER PORTABILITY															
	Local Number Portability (1 per port)			UEPRX	LNPCX	0.35										
	NONRECURRING CHARGES (NRCs) - CURRENTLY COMBINED															
	2-Wire Voice Grade Loop / Line Port Combination - Conversion - Switch-as-is			UEPRX	USAC2		1.03	0.29				15.69				
	2-Wire Voice Grade Loop / Line Port Combination - Conversion - Switch with change			UEPRX	USACC		1.03	0.29				15.69				
	2-Wire Voice Grade Loop / Line Port Combination - Conversion - Subsequent Database Update						0.76					15.69				
	ADDITIONAL NRCs															
	2-Wire Voice Grade Loop/Line Port Combination - Subsequent Activity			UEPRX	USAS2	0.00	0.00	0.00				15.69				
	2-WIRE VOICE GRADE LOOP WITH 2-WIRE LINE PORT (BUS)															
	UNE Port/Loop Combination Rates															
	2-Wire VG Loop/Port Combo - Zone 1		1			14.18										
	2-Wire VG Loop/Port Combo - Zone 2		2			18.01										

UNBUNDLED NETWORK ELEMENTS - Tennessee														Attachment: 2		Exhibit: B	
CATEGORY	RATE ELEMENTS	Interim	Zone	BCS	USOC	RATES ($)					Svc Order Submitted Elec per LSR	Svc Order Submitted Manually per LSR	Incremental Charge - Manual Svc Order vs. Electronic-1st	Incremental Charge - Manual Svc Order vs. Electronic-Add'l	Incremental Charge - Manual Svc Order vs. Electronic-Disc 1st	Incremental Charge - Manual Svc Order vs. Electronic-Disc Add'l
						Rec	Nonrecurring		Nonrecurring Disconnect		OSS Rates($)					
							First	Add'l	First	Add'l	SOMEC	SOMAN	SOMAN	SOMAN	SOMAN	SOMAN
	2-Wire VG Loop/Port Combo - Zone 3		3			23.02										
UNE Loop Rates																
	2-Wire Voice Grade Loop (SL1) - Zone 1		1	UEPBX	UEPLX	12.48										
	2-Wire Voice Grade Loop (SL1) - Zone 2		2	UEPBX	UEPLX	16.31										
	2-Wire Voice Grade Loop (SL1) - Zone 3		3	UEPBX	UEPLX	21.32										
2-Wire Voice Grade Line Port (Bus)																
	2-Wire voice unbundled port without Caller ID - bus			UEPBX	UEPBL	1.70	22.14	15.25	8.45	3.91		15.69				
	2-Wire voice unbundled port with Caller + E484 ID - bus			UEPBX	UEPBC	1.70	22.14	15.25	8.45	3.91		15.69				
	2-Wire voice unbundled port outgoing only - bus			UEPBX	UEPBO	1.70	22.14	15.25	8.45	3.91		15.69				
	2-Wire voice Grade unbundled Tennessee extended local dialing parity port with Caller ID - bus			UEPBX	UEPAV	1.70	22.14	15.25	8.45	3.91		15.69				
	2-Wire voice unbundled incoming only port with Caller ID - Bus			UEPBX	UEPB1	1.70	22.14	15.25	8.45	3.91		15.69				
	2-Wire voice unbundled Tennessee Bus 2-Way Area Calling Port Economy Option (TACC1)			UEPBX	UEPAC	1.70	22.14	15.25	8.45	3.91		15.69				
	2-Wire voice unbundled Tennessee Bus 2-Way Area Calling Port Standard Option (TACC2)			UEPBX	UEPAD	1.70	22.14	15.25	8.45	3.91		15.69				
	2-Wire voice unbundled Tennessee Bus 2-Way Collierville and Memphis Local Calling Port (B2F)			UEPBX	UEPAE	1.70	22.14	15.25	8.45	3.91		15.69				
	2-Wire Voice Unbundled Tennessee Business Dialing Plan without Caller ID			UEPBX	UEPWO	1.70	22.14	15.25	8.45	3.91		15.69				
	Tennessee Inward Collierville and Memphis Local Calling Plan (BUS)			UEPBX	UEPB2	1.70	22.14	15.25	8.45	3.91		15.69				
	Tennessee 2-Way Collierville and Memphis Local Calling Plan (BUS)			UEPBX	UEPB3	1.70	22.14	15.25	8.45	3.91		15.69				
	2-Wire voice unbundled Incoming Only Port without Caller ID Capability			UEPBX	UEPBE	1.70	22.14	15.25	8.45	3.91		15.69				
LOCAL NUMBER PORTABILITY																
	Local Number Portability (1 per port)			UEPBX	LNPCX	0.35										
FEATURES																
	All Features Offered			UEPBX	UEPVF	0.00	0.00	0.00				15.69				
NONRECURRING CHARGES (NRCs) - CURRENTLY COMBINED																
	2-Wire Voice Grade Loop / Line Port Combination - Conversion - Switch-as-is			UEPBX	USAC2		1.03	0.29				15.69				
	2-Wire Voice Grade Loop / Line Port Combination - Conversion - Switch with change			UEPBX	USACC		1.03	0.29				15.69				
	2-Wire Voice Grade Loop / Line Port Combination - Conversion - Subsequent Database Update						0.76					15.69				
ADDITIONAL NRCs																
	2-Wire Voice Grade Loop/Line Port Combination - Subsequent Activity			UEPBX	USAS2	0.00	0.00	0.00				15.69				
2-WIRE VOICE GRADE LOOP WITH 2-WIRE LINE PORT (RES - PBX)																
UNE Port/Loop Combination Rates																
	2-Wire VG Loop/Port Combo - Zone 1		1			14.18										
	2-Wire VG Loop/Port Combo - Zone 2		2			18.01										
	2-Wire VG Loop/Port Combo - Zone 3		3			23.02										
	2-Wire Voice Grade Loop (SL 1) - Zone 1		1	UEPRG	UEPLX	12.48										
	2-Wire Voice Grade Loop (SL 1) - Zone 2		2	UEPRG	UEPLX	16.31										
	2-Wire Voice Grade Loop (SL 1) - Zone 3		3	UEPRG	UEPLX	21.32										
2-Wire Voice Grade Line Port Rates (RES - PBX)																
	2-Wire VG Unbundled Combination 2-Way PBX Trunk Port - Res			UEPRG	UEPRD	1.70	22.14	15.25	8.45	3.91		15.69				
LOCAL NUMBER PORTABILITY																
	Local Number Portability (1 per port)			UEPRG	LNPCP	3.15	0.00	0.00				15.69				
FEATURES																
	All Features Offered			UEPRG	UEPVF	0.00	0.00	0.00				15.69				
NONRECURRING CHARGES (NRCs) - CURRENTLY COMBINED																
	2-Wire Voice Grade Loop/ Line Port Combination (PBX) - Conversion - Switch-As-Is			UEPRG	USAC2		1.03	0.29				15.69				

CATEGORY	RATE ELEMENTS	Interim	Zone	BCS	USOC	RATES ($)					Svc Order Submitted Elec per LSR	Svc Order Submitted Manually per LSR	Attachment: 2 Incremental Charge - Manual Svc Order vs. Electronic-1st	Attachment: 2 Incremental Charge - Manual Svc Order vs. Electronic-Add'l	Exhibit: B Incremental Charge - Manual Svc Order vs. Electronic-Disc 1st	Exhibit: B Incremental Charge - Manual Svc Order vs. Electronic-Disc Add'l
						Rec	Nonrecurring		Nonrecurring Disconnect				OSS Rates($)			
							First	Add'l	First	Add'l	SOMEC	SOMAN	SOMAN	SOMAN	SOMAN	SOMAN
	2-Wire Voice Grade Loop/ Line Port Combination (PBX) - Conversion - Switch with Change			UEPRG	USACC		1.03	0.29				15.69				
	2-Wire Voice Grade Loop / Line Port Combination - Conversion - Subsequent Database Update						0.76					15.69				
ADDITIONAL NRCs																
	2-Wire Voice Grade Loop/ Line Port Combination (PBX) - Subsequent Activity			UEPRG	USAS2	0.00	0.00	0.00				15.69				
	PBX Subsequent Activity - Change/Rearrange Multiline Hunt Group						14.64	14.64				15.69				
2-WIRE VOICE GRADE LOOP WITH 2-WIRE LINE PORT (BUS - PBX)																
UNE Port/Loop Combination Rates																
	2-Wire VG Loop/Port Combo - Zone 1		1			14.18										
	2-Wire VG Loop/Port Combo - Zone 2		2			18.01										
	2-Wire VG Loop/Port Combo - Zone 3		3			23.02										
UNE Loop Rates																
	2-Wire Voice Grade Loop (SL 1) - Zone 1		1	UEPPX	UEPLX	12.48										
	2-Wire Voice Grade Loop (SL 1) - Zone 2		2	UEPPX	UEPLX	16.31										
	2-Wire Voice Grade Loop (SL 1) - Zone 3		3	UEPPX	UEPLX	21.32										
2-Wire Voice Grade Line Port Rates (BUS - PBX)																
	Line Side Unbundled Combination 2-Way PBX Trunk Port - Bus			UEPPX	UEPPC	1.70	22.14	15.25	8.45	3.91		15.69				
	Line Side Unbundled Outward PBX Trunk Port - Bus			UEPPX	UEPPO	1.70	22.14	15.25	8.45	3.91		15.69				
	Line Side Unbundled Incoming PBX Trunk Port - Bus			UEPPX	UEPP1	1.70	22.14	15.25	8.45	3.91		15.69				
	2-Wire Voice Unbundled PBX LD Terminal Ports			UEPPX	UEPLD	1.70	22.14	15.25	8.45	3.91		15.69				
	2-Wire Voice Unbundled 2-Way Combination PBX Tennessee Calling Port			UEPPX	UEPT2	1.70	22.14	15.25	8.45	3.91		15.69				
	2-Wire Voice Unbundled 1-Way Outgoing PBX Tennessee Calling Port			UEPPX	UEPTO	1.70	22.14	15.25	8.45	3.91		15.69				
	2-Wire Voice Unbundled 2-Way Combination PBX Usage Port			UEPPX	UEPXA	1.70	22.14	15.25	8.45	3.91		15.69				
	2-Wire Voice Unbundled PBX Toll Terminal Hotel Ports			UEPPX	UEPXB	1.70	22.14	15.25	8.45	3.91		15.69				
	2-Wire Voice Unbundled PBX LD DDD Terminals Port			UEPPX	UEPXC	1.70	22.14	15.25	8.45	3.91		15.69				
	2-Wire Voice Unbundled PBX LD Terminal Switchboard Port			UEPPX	UEPXD	1.70	22.14	15.25	8.45	3.91		15.69				
	2-Wire Voice Unbundled PBX LD Terminal Switchboard IDD Capable Port			UEPPX	UEPXE	1.70	22.14	15.25	8.45	3.91		15.69				
	2-Wire Voice Unbundled 2-Way PBX Hotel/Hospital Economy Administrative Calling Port			UEPPX	UEPXL	1.70	22.14	15.25	8.45	3.91		15.69				
	2-Wire Voice Unbundled 2-Way PBX Hotel/Hospital Economy Room Calling Port			UEPPX	UEPXM	1.70	22.14	15.25	8.45	3.91		15.69				
	2-Wire Voice Unbundled 1W Out PBX Hotel/Hospital Economy Administrative Calling Port TN Calling Port			UEPPX	UEPXN	1.70	22.14	15.25	8.45	3.91		15.69				
	2-Wire Voice Unbundled 1-Way Outgoing PBX Hotel/Hospital Discount Room Calling Port			UEPPX	UEPXO	1.70	22.14	15.25	8.45	3.91		15.69				
	2-Wire Voice Unbundled 1-Way Outgoing PBX Measured Port			UEPPX	UEPXS	1.70	22.14	15.25	8.45	3.91		15.69				
	2-Wire Voice Unbundled PBX Collierville and Memphis Calling Port			UEPPX	UEPXU	1.70	22.14	15.25	8.45	3.91		15.69				
	2-Wire Voice Unbundled 2-Way PBX Tennessee RegionServ Callling Port			UEPPX	UEPXV	1.70	22.14	15.25	8.45	3.91		15.69				
	Tennessee PBX 2-Way Combo Each Additional Trunk Collierville and Memphis Local Calling Plan			UEPPX	UEPA6	1.70	22.14	15.25	8.45	3.91		15.69				
	Tennessee PBX 2-Way Combo First Trunk Collierville and Memphis Local Calling Plan			UEPPX	UEPA7	1.70	22.14	15.25	8.45	3.91		15.69				
LOCAL NUMBER PORTABILITY																
	Local Number Portability (1 per port)			UEPPX	LNPCP	3.15	0.00	0.00				15.69				
FEATURES																
	All Features Offered			UEPPX	UEPVF	0.00	0.00	0.00				15.69				
NONRECURRING CHARGES (NRCs) - CURRENTLY COMBINED																
	2-Wire Voice Grade Loop/ Line Port Combination (PBX) - Conversion - Switch-As-Is			UEPPX	USAC2		1.03	0.29				15.69				

CATEGORY	RATE ELEMENTS	Interim	Zone	BCS	USOC	RATES ($)					Svc Order Submitted Elec per LSR	Svc Order Submitted Manually per LSR	Attachment: 2 Incremental Charge - Manual Svc Order vs. Electronic-1st	Attachment: 2 Incremental Charge - Manual Svc Order vs. Electronic-Add'l	Exhibit: B Incremental Charge - Manual Svc Order vs. Electronic-Disc 1st	Exhibit: B Incremental Charge - Manual Svc Order vs. Electronic-Disc Add'l
						Rec	Nonrecurring		Nonrecurring Disconnect				OSS Rates($)			
							First	Add'l	First	Add'l	SOMEC	SOMAN	SOMAN	SOMAN	SOMAN	SOMAN
	2-Wire Voice Grade Loop/ Line Port Combination (PBX) - Conversion - Switch with Change			UEPPX	USACC		1.03	0.29				15.69				
	2-Wire Voice Grade Loop / Line Port Combination - Conversion - Subsequent Database Update						0.76					15.69				
ADDITIONAL NRCs																
	2-Wire Voice Grade Loop/ Line Port Combination (PBX) - Subsequent Activity			UEPPX	USAS2	0.00	0.00	0.00				15.69				
	PBX Subsequent Activity - Change/Rearrange Multiline Hunt Group						14.64	14.64				15.69				
UNE Port/Loop Combination Rates																
	2-Wire VG Coin Port/Loop Combo – Zone 1		1			14.18										
	2-Wire VG Coin Port/Loop Combo – Zone 2		2			18.01										
	2-Wire VG Coin Port/Loop Combo – Zone 3		3			23.02										
UNE Loop Rates																
	2-Wire Voice Grade Loop (SL1) - Zone 1		1	UEPCO	UEPLX	12.48										
	2-Wire Voice Grade Loop (SL1) - Zone 2		2	UEPCO	UEPLX	16.31										
	2-Wire Voice Grade Loop (SL1) - Zone 3		3	UEPCO	UEPLX	21.32										
2-Wire Voice Grade Line Ports (COIN)																
	2-Wire Coin 2-Way without Operator Screening and without Blocking (TN)			UEPCO	UEPTB	1.70	22.14	15.25	8.45	3.91		15.69				
	2-Wire Coin 2-Way with Operator Screening and Blocking: 011, 900/976, 1+DDD (NC, TN)			UEPCO	UEPRP	1.70	22.14	15.25	8.45	3.91		15.69				
	2-Wire Coin 2-Way with Operator Screening and 011 Blocking (TN)			UEPCO	UEPTA	1.70	22.14	15.25	8.45	3.91		15.69				
	2-Wire Coin 2-Way with Operator Screening: 900 Blocking: 900/976, 1+DDD, 011+, and Local (NC, TN)			UEPCO	UEPCA	1.70	22.14	15.25	8.45	3.91		15.69				
	2-Wire Coin Outward with Operator Screening and 011 Blocking (TN)			UEPCO	UEPTC	1.70	22.14	15.25	8.45	3.91		15.69				
	2-Wire Coin Outward with Operator Screening and Blocking: 900/976, 1+DDD, 011+, and Local (TN)			UEPCO	UEPOT	1.70	22.14	15.25	8.45	3.91		15.69				
	2-Wire 2-Way Smartline with 900/976 (all states except LA)			UEPCO	UEPCK	1.88						15.69				
	2-Wire Coin Outward Smartline with 900/976 (all states except LA)			UEPCO	UEPCR	1.88						15.69				
ADDITIONAL UNE COIN PORT/LOOP (RC)																
	UNE Coin Port/Loop Combo Usage (Flat Rate)			UEPCO	URECU	3.45	0.00	0.00	0.00	0.00		15.69				
	Local Number Portability (1 per port)			UEPCO	LNPCX	0.35										
	2-Wire Voice Grade Loop / Line Port Combination - Conversion - Switch-as-is			UEPCO	USAC2		1.03	0.29				15.69				
	2-Wire Voice Grade Loop / Line Port Combination - Conversion - Switch with change			UEPCO	USACC		1.03	0.29				15.69				
	2-Wire Voice Grade Loop/Line Port Combination - Subsequent Activity			UEPCO	USAS2	0.00	0.00	0.00				15.69				
2-WIRE VOICE LOOP/ 2WIRE VOICE GRADE IO TRANSPORT/ 2-WIRE LINE PORT (RES)																
UNE Port/Loop Combination Rates																
	2-Wire VG Loop/IO Tranport/Port Combo - Zone 1		1			18.45										
	2-Wire VG Loop/IO Tranport/Port Combo - Zone 2		2			23.52										
	2-Wire VG Loop/IO Tranport/Port Combo - Zone 3		3			30.17										
UNE Loop Rates																
	2-Wire Voice Grade Loop (SL2) - Zone 1		1	UEPFR	UECF2	16.56										
	2-Wire Voice Grade Loop (SL2) - Zone 2		2	UEPFR	UECF2	21.63										
	2-Wire Voice Grade Loop (SL2) - Zone 3		3	UEPFR	UECF2	28.28										
2-Wire Voice Grade Line Port Rates (Res)																
	2-Wire voice unbundled port - residence			UEPFR	UEPRL	1.89	84.99	57.39	32.36	20.56		15.69				
	2-Wire voice unbundled port with Caller ID - res			UEPFR	UEPRC	1.89	84.99	57.39	32.36	20.56		15.69				
	2-Wire voice unbundled port outgoing only - res			UEPFR	UEPRO	1.89	84.99	57.39	32.36	20.56		15.69				
	2-Wire voice Grade unbundled Tennessee extended local dialing parity port with Caller ID - res			UEPFR	UEPAQ	1.89	84.99	57.39	32.36	20.56		15.69				
	2-Wire voice unbundled Tennessee Area Plus with Caller ID - res (AC7)			UEPFR	UEPAH	1.89	84.99	57.39	32.36	20.56		15.69				

UNBUNDLED NETWORK ELEMENTS - Tennessee														Attachment: 2		Exhibit: B	
CATEGORY	RATE ELEMENTS	Interim	Zone	BCS	USOC	RATES ($)					Svc Order Submitted Elec per LSR	Svc Order Submitted Manually per LSR	Incremental Charge - Manual Svc Order vs. Electronic-1st	Incremental Charge - Manual Svc Order vs. Electronic-Add'l	Incremental Charge - Manual Svc Order vs. Electronic-Disc 1st	Incremental Charge - Manual Svc Order vs. Electronic-Disc Add'l
						Rec	Nonrecurring		Nonrecurring Disconnect		OSS Rates($)					
							First	Add'l	First	Add'l	SOMEC	SOMAN	SOMAN	SOMAN	SOMAN	SOMAN
	2-Wire voice unbundled Tennessee Area Calling port with Caller ID - res (F2R)			UEPFR	UEPAK	1.89	84.99	57.39	32.36	20.56		15.69				
	2-Wire voice unbundled Tennessee Area Calling port with Caller ID - res (TACER)			UEPFR	UEPAL	1.89	84.99	57.39	32.36	20.56		15.69				
	2-Wire voice unbundled Tennessee Area Calling port with Caller ID - res (TACSR)			UEPFR	UEPAM	1.89	84.99	57.39	32.36	20.56		15.69				
	2-Wire voice unbundled Tennessee Area Calling port with Caller ID - res (1MF2X)			UEPFR	UEPAN	1.89	84.99	57.39	32.36	20.56		15.69				
	2-Wire voice unbundled Tennessee Area Calling port with Caller ID - res (2MR)			UEPFR	UEPAO	1.89	84.99	57.39	32.36	20.56		15.69				
	2-Wire voice unbundles res, low usage line port with Caller ID (LUM)			UEPFR	UEPAP	1.89	84.99	57.39	32.36	20.56		15.69				
	2-Wire Voice Unbundled Tennessee Residence Dialing Plan without Caller ID			UEPFR	UEPWN	1.89	84.99	57.39	32.36	20.56		15.69				
INTEROFFICE TRANSPORT																
	Interoffice Transport - Dedicated - 2 Wire Voice Grade - Facility Termination			UEPFR	U1TV2	18.58	55.39	17.37	27.96	3.51						
	Interoffice Transport - Dedicated - 2 Wire Voice Grade - Per Mile or Fraction Mile			UEPFR	1L5XX	0.0174										
FEATURES																
	All Features Offered			UEPFR	UEPVF	0.00	0.00	0.00				15.69				
LOCAL NUMBER PORTABILITY																
	Local Number Portability (1 per port)			UEPFR	LNPCX	0.35										
NONRECURRING CHARGES (NRCs) - CURRENTLY COMBINED																
	2-Wire Loop / Dedicated IO Transport / 2 Wire Line Port Combination - Conversion - Switch-as-is			UEPFR	USAC2		16.94	3.72				15.69				
	2-Wire Loop / Dedicated IO Transport / 2 Wire Line Port Combination - Conversion - Switch-With-Change			UEPFR	USACC		16.94	3.72				15.69				
2-WIRE VOICE LOOP/ 2WIRE VOICE GRADE IO TRANSPORT/ 2-WIRE LINE PORT (BUS)																
UNE Port/Loop Combination Rates																
	2-Wire VG Loop/IO Tranport/Port Combo - Zone 1		1			18.45										
	2-Wire VG Loop/IO Tranport/Port Combo - Zone 2		2			23.52										
	2-Wire VG Loop/IO Tranport/Port Combo - Zone 3		3			30.17										
UNE Loop Rates																
	2-Wire Voice Grade Loop (SL2) - Zone 1		1	UEPFB	UECF2	16.56										
	2-Wire Voice Grade Loop (SL2) - Zone 2		2	UEPFB	UECF2	21.63										
	2-Wire Voice Grade Loop (SL2) - Zone 3		3	UEPFB	UECF2	28.28										
2-Wire Voice Grade Line Port (Bus)																
	2-Wire voice unbundled port without Caller ID - bus			UEPFB	UEPBL	1.89	84.99	57.39	32.36	20.56		15.69				
	2-Wire voice unbundled port with Caller + E484 ID - bus			UEPFB	UEPBC	1.89	84.99	57.39	32.36	20.56		15.69				
	2-Wire voice unbundled port outgoing only - bus			UEPFB	UEPBO	1.89	84.99	57.39	32.36	20.56		15.69				
	2-Wire voice Grade unbundled Tennessee extended local dialing parity port with Caller ID - bus			UEPFB	UEPAV	1.89	84.99	57.39	32.36	20.56		15.69				
	2-Wire voice unbundled incoming only port with Caller ID - Bus			UEPFB	UEPB1	1.89	84.99	57.39	32.36	20.56		15.69				
	2-Wire voice unbundled Tennessee Bus 2-Way Area Calling Port Economy Option (TACC1)			UEPFB	UEPAC	1.89	84.99	57.39	32.36	20.56		15.69				
	2-Wire voice unbundled Tennessee Bus 2-Way Area Calling Port Standard Option (TACC2)			UEPFB	UEPAD	1.89	84.99	57.39	32.36	20.56		15.69				
	2-Wire voice unbundled Tennessee Bus 2-Way Collierville and Memphis Local Calling Port (B2F)			UEPFB	UEPAE	1.89	84.99	57.39	32.36	20.56		15.69				
	2-Wire Voice Unbundled Tennessee Business Dialing Plan without Caller ID			UEPFB	UEPWO	1.89	84.99	57.39	32.36	20.56		15.69				
	Tennessee Inward Collierville and Memphis Local Calling Plan (BUS)			UEPFB	UEPB2	1.89	84.99	57.39	32.36	20.56		15.69				
	Tennessee 2-Way Collierville and Memphis Local Calling Plan (BUS)			UEPFB	UEPB3	1.89	84.99	57.39	32.36	20.56		15.69				
LOCAL NUMBER PORTABILITY																
	Local Number Portability (1 per port)			UEPFB	LNPCX	0.35										
INTEROFFICE TRANSPORT																

CATEGORY	RATE ELEMENTS	Interim	Zone	BCS	USOC	RATES ($)					Svc Order Submitted Elec per LSR	Svc Order Submitted Manually per LSR	Attachment: 2 Incremental Charge - Manual Svc Order vs. Electronic-1st	Attachment: 2 Incremental Charge - Manual Svc Order vs. Electronic-Add'l	Exhibit: B Incremental Charge - Manual Svc Order vs. Electronic-Disc 1st	Exhibit: B Incremental Charge - Manual Svc Order vs. Electronic-Disc Add'l
						Rec	Nonrecurring		Nonrecurring Disconnect				OSS Rates($)			
							First	Add'l	First	Add'l	SOMEC	SOMAN	SOMAN	SOMAN	SOMAN	SOMAN
	Interoffice Transport - Dedicated - 2 Wire Voice Grade - Facility Termination			UEPFB	U1TV2	18.58	55.39	17.37	27.96	3.51						
	Interoffice Transport - Dedicated - 2 Wire Voice Grade - Per Mile or Fraction Mile			UEPFB	1L5XX	0.0174										
FEATURES																
	All Features Offered			UEPFB	UEPVF	0.00	0.00	0.00				15.69				
NONRECURRING CHARGES (NRCs) - CURRENTLY COMBINED																
	2-Wire Loop / Dedicated IO Transport / 2 Wire Line Port Combination - Conversion - Switch-as-is			UEPFB	USAC2		16.94	3.72				15.69				
	2-Wire Loop / Dedicated IO Transport / 2 Wire Line Port Combination - Conversion - Switch with change			UEPFB	USACC		16.94	3.72				15.69				
2-WIRE VOICE GRADE LOOP WITH 2-WIRE LINE PORT (BUS - PBX)																
UNE Port/Loop Combination Rates																
	2-Wire VG Loop/IO Tranport/Port Combo - Zone 1		1			18.45										
	2-Wire VG Loop/IO Tranport/Port Combo - Zone 2		2			23.52										
	2-Wire VG Loop/IO Tranport/Port Combo - Zone 3		3			30.17										
UNE Loop Rates																
	2-Wire Voice Grade Loop (SL2) - Zone 1		1	UEPFP	UECF2	16.56										
	2-Wire Voice Grade Loop (SL2) - Zone 2		2	UEPFP	UECF2	21.63										
	2-Wire Voice Grade Loop (SL2) - Zone 3		3	UEPFP	UECF2	28.28										
2-Wire Voice Grade Line Port Rates (BUS - PBX)																
	Line Side Unbundled Combination 2-Way PBX Trunk Port - Bus			UEPFP	UEPPC	1.79	106.40	63.08	42.67	18.54		15.69				
	Line Side Unbundled Outward PBX Trunk Port - Bus			UEPFP	UEPPO	1.79	106.40	63.08	42.67	18.54		15.69				
	Line Side Unbundled Incoming PBX Trunk Port - Bus			UEPFP	UEPP1	1.79	106.40	63.08	42.67	18.54		15.69				
	2-Wire Voice Unbundled PBX LD Terminal Ports			UEPFP	UEPLD	1.79	106.40	63.08	42.67	18.54		15.69				
	2-Wire Voice Unbundled 2-Way Combination PBX Tennessee Calling Port			UEPFP	UEPT2	1.79	106.40	63.08	42.67	18.54		15.69				
	2-Wire Voice Unbundled 1-Way Outgoing PBX Tennessee Calling Port			UEPFP	UEPTO	1.79	106.40	63.08	42.67	18.54		15.69				
	2-Wire Voice Unbundled 2-Way Combination PBX Usage Port			UEPFP	UEPXA	1.79	106.40	63.08	42.67	18.54		15.69				
	2-Wire Voice Unbundled PBX Toll Terminal Hotel Ports			UEPFP	UEPXB	1.79	106.40	63.08	42.67	18.54		15.69				
	2-Wire Voice Unbundled PBX LD DDD Terminals Port			UEPFP	UEPXC	1.79	106.40	63.08	42.67	18.54		15.69				
	2-Wire Voice Unbundled PBX LD Terminal Switchboard Port			UEPFP	UEPXD	1.79	106.40	63.08	42.67	18.54		15.69				
	2-Wire Voice Unbundled PBX LD Terminal Switchboard IDD Capable Port			UEPFP	UEPXE	1.79	106.40	63.08	42.67	18.54		15.69				
	2-Wire Voice Unbundled 2-Way PBX Hotel/Hospital Economy Administrative Calling Port			UEPFP	UEPXL	1.79	106.40	63.08	42.67	18.54		15.69				
	2-Wire Voice Unbundled 2-Way PBX Hotel/Hospital Economy Room Calling Port			UEPFP	UEPXM	1.79	106.40	63.08	42.67	18.54		15.69				
	2-Wire Voice Unbundled 1W Out PBX Hotel/Hospital Economy Administrative Calling Port TN Calling Port			UEPFP	UEPXN	1.79	106.40	63.08	42.67	18.54		15.69				
	2-Wire Voice Unbundled 1-Way Outgoing PBX Hotel/Hospital Discount Room Calling Port			UEPFP	UEPXO	1.79	106.40	63.08	42.67	18.54		15.69				
	2-Wire Voice Unbundled 1-Way Outgoing PBX Measured Port			UEPFP	UEPXS	1.79	106.40	63.08	42.67	18.54		15.69				
	2-Wire Voice Unbundled PBX Collierville and Memphis Calling Port			UEPFP	UEPXU	1.79	106.40	63.08	42.67	18.54		15.69				
	2-Wire Voice Unbundled 2-Way PBX Tennessee RegionServ Callling Port			UEPFP	UEPXV	1.79	106.40	63.08	42.67	18.54		15.69				
LOCAL NUMBER PORTABILITY																
	Local Number Portability (1 per port)			UEPFP	LNPCP	3.15	0.00	0.00				15.69				
INTEROFFICE TRANSPORT																
	Interoffice Transport - Dedicated - 2 Wire Voice Grade - Facility Termination			UEPFP	U1TV2	18.58	55.39	17.37	27.96	3.51						
	Interoffice Transport - Dedicated - 2 Wire Voice Grade - Per Mile or Fraction Mile			UEPFP	1L5XX	0.0174										
FEATURES																
	All Features Offered			UEPFP	UEPVF	0.00	0.00	0.00				15.69				
NONRECURRING CHARGES (NRCs) - CURRENTLY COMBINED																

CATEGORY	RATE ELEMENTS	Interim	Zone	BCS	USOC	RATES ($) Rec	Nonrecurring First	Nonrecurring Add'l	Nonrecurring Disconnect First	Nonrecurring Disconnect Add'l	Svc Order Submitted Elec per LSR SOMEC	Svc Order Submitted Manually per LSR SOMAN	Attachment: 2 Incremental Charge - Manual Svc Order vs. Electronic-1st SOMAN	Attachment: 2 Incremental Charge - Manual Svc Order vs. Electronic-Add'l SOMAN	Exhibit: B Incremental Charge - Manual Svc Order vs. Electronic-Disc 1st SOMAN	Exhibit: B Incremental Charge - Manual Svc Order vs. Electronic-Disc Add'l SOMAN
											OSS Rates($)					
	2-Wire Loop / Dedicated IO Transport / 2 Wire Line Port Combination - Conversion - Switch-as-is			UEPFP	USAC2		16.94	3.72				15.69				
	2-Wire Loop / Dedicated IO Transport / 2 Wire Line Port Combination - Conversion - Switch with change			UEPFP	USACC		16.94	3.72				15.69				
UNBUNDLED PORT/LOOP COMBINATIONS - COST BASED RATES																
2-WIRE VOICE GRADE LOOP- BUS ONLY - WITH 2-WIRE DID TRUNK PORT																
UNE Port/Loop Combination Rates																
2-Wire VG Loop/2-Wire DID Trunk Port Combo - UNE Zone 1			1			18.38										
2-Wire VG Loop/2-Wire DID Trunk Port Combo - UNE Zone 2			2			19.87										
2-Wire VG Loop/2-Wire DID Trunk Port Combo - UNE Zone 3			3			24.78										
UNE Loop Rates																
2-Wire Analog Voice Grade Loop - (SL2) - UNE Zone 1			1	UEPPX	UECD1	9.60										
2-Wire Analog Voice Grade Loop - (SL2) - UNE Zone 2			2	UEPPX	UECD1	11.09										
2-Wire Analog Voice Grade Loop - (SL2) - UNE Zone 3			3	UEPPX	UECD1	16.00										
UNE Port Rate																
Exchange Ports - 2-Wire DID Port				UEPPX	UEPD1	8.78	45.44	29.94	8.45	3.91			30.89	7.03		
NONRECURRING CHARGES - CURRENTLY COMBINED																
2-Wire Voice Grade Loop / 2-Wire DID Trunk Port Combination - Switch-as-is				UEPPX	USAC1		8.76	5.75					30.89	7.03		
2-Wire Voice Grade Loop / 2-Wire DID Trunk Port Conversion with BellSouth Allowable Changes				UEPPX	USA1C		8.76	5.75					30.89	7.03		
Telephone Number/Trunk Group Establisment Charges																
DID Trunk Termination (One Per Port)				UEPPX	NDT	0.00	0.00	0.00								
Additional DID Numbers for each Group of 20 DID Numbers				UEPPX	ND4	0.00	0.00	0.00								
DID Numbers, Non- consecutive DID Numbers , Per Number				UEPPX	ND5	0.00	0.00	0.00								
Reserve Non-Consecutive DID numbers				UEPPX	ND6	0.00	0.00	0.00								
Reserve DID Numbers				UEPPX	NDV	0.00	0.00	0.00								
LOCAL NUMBER PORTABILITY																
Local Number Portability (1 per port)				UEPPX	LNPCP	3.15	0.00	0.00								
2-WIRE ISDN DIGITAL GRADE LOOP WITH 2-WIRE ISDN DIGITAL LINE SIDE PORT																
UNE Port/Loop Combination Rates																
2W ISDN Digital Grade Loop/2W ISDN Digital Line Side Port - UNE Zone 1			1	UEPPB UEPPR		32.27										
2W ISDN Digital Grade Loop/2W ISDN Digital Line Side Port - UNE Zone 2			2	UEPPB UEPPR		34.78										
2W ISDN Digital Grade Loop/2W ISDN Digital Line Side Port - UNE Zone 3			3	UEPPB UEPPR		44.32										
UNE Loop Rates																
2-Wire ISDN Digital Grade Loop - UNE Zone 1			1	UEPPB UEPPR	USL2X	16.20										
2-Wire ISDN Digital Grade Loop - UNE Zone 2			2	UEPPB UEPPR	USL2X	18.71										
2-Wire ISDN Digital Grade Loop - UNE Zone 3			3	UEPPB UEPPR	USL2X	28.25										
UNE Port Rate																
Exchange Port - 2-Wire ISDN Line Side Port				UEPPB UEPPR	UEPPB	16.07	141.75	118.37	49.20	43.26			19.99	19.99		
NONRECURRING CHARGES - CURRENTLY COMBINED																
2-Wire ISDN Digital Grade Loop / 2-Wire ISDN Line Side Port Combination - Conversion				UEPPB UEPPR	USACB	0.00	117.23	117.23					19.99	19.99		
ADDITIONAL NRCs																
2-Wire ISDN Loop / 2-Wire ISDN Port Combination - Sub Actvy - Non Feature/Add Trunk				UEPPB UEPPR	USASB		212.88						19.99	19.99		
LOCAL NUMBER PORTABILITY																
Local Number Portability (1 per port)				UEPPB UEPPR	LNPCX	0.35	0.00	0.00								
B-CHANNEL USER PROFILE ACCESS:																
CVS/CSD (DMS/5ESS)				UEPPB UEPPR	U1UCA	0.00	0.00	0.00								
CVS (EWSD)				UEPPB UEPPR	U1UCB	0.00	0.00	0.00								
CSD				UEPPB UEPPR	U1UCC	0.00	0.00	0.00								
B-CHANNEL AREA PLUS USER PROFILE ACCESS: (AL,KY,LA,MS SC,MS, & TN)																
CVS/CSD (DMS/5ESS)				UEPPB UEPPR	U1UCD	0.00	0.00	0.00								
CVS (EWSD)				UEPPB UEPPR	U1UCE	0.00	0.00	0.00								

CATEGORY	RATE ELEMENTS	Interim	Zone	BCS	USOC	RATES ($) Rec	Nonrecurring First	Nonrecurring Add'l	Nonrecurring Disconnect First	Nonrecurring Disconnect Add'l	Svc Order Submitted Elec per LSR	Svc Order Submitted Manually per LSR	Attachment: 2 Incremental Charge - Manual Svc Order vs. Electronic-1st	Attachment: 2 Incremental Charge - Manual Svc Order vs. Electronic-Add'l	Exhibit: B Incremental Charge - Manual Svc Order vs. Electronic-Disc 1st	Exhibit: B Incremental Charge - Manual Svc Order vs. Electronic-Disc Add'l
											OSS Rates($)					
											SOMEC	SOMAN	SOMAN	SOMAN	SOMAN	SOMAN
	CSD			UEPPB UEPPR	U1UCF	0.00	0.00	0.00								
USER TERMINAL PROFILE																
	User Terminal Profile (EWSD only)			UEPPB UEPPR	U1UMA	0.00	0.00	0.00								
VERTICAL FEATURES																
	All Vertical Features - One per Channel B User Profile			UEPPB UEPPR	UEPVF	0.00	0.00	0.00								
	Interoffice Channel mileage each, including first mile and facilities termination			UEPPB UEPPR	M1GNC	17.91	53.99	17.37					19.99	19.99		
	Interoffice Channel mileage each, additional mile			UEPPB UEPPR	M1GNM	0.173	0.00	0.00								
4-WIRE DS1 DIGITAL LOOP WITH 4-WIRE ISDN DS1 DIGITAL TRUNK PORT																
UNE Port/Loop Combination Rates																
	4W DS1 Digital Loop/4W ISDN DS1 Digital Trunk Port - UNE Zone 1		1	UEPPP		132.58										
	4W DS1 Digital Loop/4W ISDN DS1 Digital Trunk Port - UNE Zone 2		2	UEPPP		150.25										
	4W DS1 Digital Loop/4W ISDN DS1 Digital Trunk Port - UNE Zone 3		3	UEPPP		173.44										
UNE Loop Rates																
	4-Wire DS1 Digital Loop - UNE Zone 1		1	UEPPP	USL4P	57.73										
	4-Wire DS1 Digital Loop - UNE Zone 2		2	UEPPP	USL4P	75.40										
	4-Wire DS1 Digital Loop - UNE Zone 3		3	UEPPP	USL4P	98.59										
UNE Port Rate																
	Exchange Ports - 4-Wire ISDN DS1 Port			UEPPP	UEPPP	74.85	415.53	366.90	89.28	77.43			19.99	19.99		
NONRECURRING CHARGES - CURRENTLY COMBINED																
	4-Wire DS1 Digital Loop / 4-Wire ISDN DS1 Digital Trunk Port Combination - Conversion -Switch-as-is			UEPPP	USACP	0.00	328.53	328.53					19.99	19.99		
ADDITIONAL NRCs																
	4-Wire DS1 Loop/4-W ISDN Digtl Trk Port - Subsqt Actvy-Inward/two way Tel Nos. (except NC)			UEPPP	PR7TF		0.94						19.99	19.99		
	4-Wire DS1 Loop / 4-Wire ISDN DS1 Digital Trunk Port - Outward Tel Numbers (All States except NC)			UEPPP	PR7TO		22.36	22.36					19.99	19.99		
	4-Wire DS1 Loop / 4-Wire ISDN DS1 Digital Trk Port - Subsequent Inward Tel Numbers			UEPPP	PR7ZT		44.71	44.70					19.99	19.99		
LOCAL NUMBER PORTABILITY																
	Local Number Portability (1 per port)			UEPPP	LNPCN	1.75										
INTERFACE (Provsioning Only)																
	Voice/Data			UEPPP	PR71V	0.00	0.00	0.00								
	Digital Data			UEPPP	PR71D	0.00	0.00	0.00								
	Inward Data			UEPPP	PR71E	0.00	0.00	0.00								
New or Additional "B" Channel																
	New or Additional - Voice/Data B Channel			UEPPP	PR7BV	0.00	28.39						19.99	19.99		
	New or Additional - Digital Data B Channel			UEPPP	PR7BF	0.00	29.11						19.99	19.99		
	New or Additional Inward Data B Channel			UEPPP	PR7BD	0.00	29.39						19.99	19.99		
CALL TYPES																
	Inward			UEPPP	PR7C1	0.00	0.00	0.00								
	Outward			UEPPP	PR7CO	0.00	0.00	0.00								
	Two-way			UEPPP	PR7CC	0.00	0.00	0.00								
Interoffice Channel Mileage																
	Fixed Each Including First Mile			UEPPP	1LN1A	76.1825	145.98	109.85	19.55				19.99	19.99		
	Each Airline-Fractional Additional Mile			UEPPP	1LN1B	0.3525										
4-WIRE DS1 DIGITAL LOOP WITH 4-WIRE DDITS TRUNK PORT																
UNE Port/Loop Combination Rates																
	4W DS1 Digital Loop/4W DDITS Trunk Port - UNE Zone 1		1	UEPDC		93.28							19.99	19.99		
	4W DS1 Digital Loop/4W DDITS Trunk Port - UNE Zone 2		2	UEPDC		110.95							19.99	19.99		
	4W DS1 Digital Loop/4W DDITS Trunk Port - UNE Zone 3		3	UEPDC		134.14							19.99	19.99		
UNE Loop Rates																
	4-Wire DS1 Digital Loop - UNE Zone 1		1	UEPDC	USLDC	57.53										
	4-Wire DS1 Digital Loop - UNE Zone 2		2	UEPDC	USLDC	75.40										
	4-Wire DS1 Digital Loop - UNE Zone 3		3	UEPDC	USLDC	98.59										
UNE Port Rate																

UNBUNDLED NETWORK ELEMENTS - Tennessee													Attachment: 2		Exhibit: B	
CATEGORY	RATE ELEMENTS	Interim	Zone	BCS	USOC	RATES ($)					Svc Order Submitted Elec per LSR	Svc Order Submitted Manually per LSR	Incremental Charge - Manual Svc Order vs. Electronic-1st	Incremental Charge - Manual Svc Order vs. Electronic-Add'l	Incremental Charge - Manual Svc Order vs. Electronic-Disc 1st	Incremental Charge - Manual Svc Order vs. Electronic-Disc Add'l
						Rec	Nonrecurring		Nonrecurring Disconnect		OSS Rates($)					
							First	Add'l	First	Add'l	SOMEC	SOMAN	SOMAN	SOMAN	SOMAN	SOMAN
	4-Wire DDITS Digital Trunk Port			UEPDC	UDD1T	35.55	342.80	257.87	61.41	48.49			19.99	19.99		
NONRECURRING CHARGES - CURRENTLY COMBINED																
	4-Wire DS1 Digital Loop / 4-Wire DDITS Trunk Port Combination - Switch-as-is			UEPDC	USAC4		312.91	312.91					19.99	19.99		
	4-Wire DS1 Digital Loop / 4-Wire DDITS Trunk Port Combination - Conversion with DS1 Changes			UEPDC	USAWA		312.91	312.91					19.99	19.99		
	4-Wire DS1 Digital Loop / 4-Wire DDITS Trunk Port Combination - Conversion with Change - Trunk			UEPDC	USAWB		312.91	312.91					19.99	19.99		
ADDITIONAL NRCs																
	4-Wire DS1 Loop / 4-Wire DDITS Trunk Port - Subsequent Service Activity Per Service Order			UEPDC	USAS4		94.88	94.88								
	4-Wire DS1 Loop / 4-Wire DDITS Trunk Port - NRC - Subsequent Channel Activation/Chan - 2-Way Trunk			UEPDC	UDTTA		108.67	108.67					19.99	19.99		
	4-Wire DS1 Loop / 4-Wire DDITS Trunk Port - Subsequent Channel Activation/Chan - 1-Way Outward Trunk			UEPDC	UDTTB		108.67	108.67					19.99	19.99		
	4-Wire DS1 Loop / 4-Wire DDITS Trunk Port - Subsqnt Channel Activation/Chan Inward Trunk w/out DID			UEPDC	UDTTC		108.67	108.67					19.99	19.99		
	4-Wire DS1 Loop / 4-Wire DDITS Trunk Port - Subsqnt Chan Activation Per Chan - Inward Trunk with DID			UEPDC	UDTTD		108.67	108.67					19.99	19.99		
	4-Wire DS1 Loop / 4-Wire DDITS Trunk Port - Subsqnt Chan Activation / Chan - 2-Way DID w User Trans			UEPDC	UDTTE		108.67	108.67					19.99	19.99		
BIPOLAR 8 ZERO SUBSTITUTION																
	B8ZS -Superframe Format			UEPDC	CCOSF		0.00	590.00					19.99	19.99		
	B8ZS - Extended Superframe Format			UEPDC	CCOEF		0.00	590.00					19.99	19.99		
Alternate Mark Inversion																
	AMI -Superframe Format			UEPDC	MCOSF		0.00	0.00								
	AMI - Extended SuperFrame Format			UEPDC	MCOPO		0.00	0.00								
Telephone Number/Trunk Group Establisment Charges																
	Telephone Number for 2-Way Trunk Group			UEPDC	UDTGX	0.00							19.99	19.99		
	Telephone Number for 1-Way Outward Trunk Group			UEPDC	UDTGY	0.00							19.99	19.99		
	Telephone Number for 1-Way Inward Trunk Group Without DID			UEPDC	UDTGZ	0.00							19.99	19.99		
	DID Numbers for each Group of 20 DID Numbers			UEPDC	ND4	0.00							19.99	19.99		
	DID Numbers, Non- consecutive DID Numbers , Per Number			UEPDC	ND5	0.00							19.99	19.99		
	Reserve Non-Consecutive DID Nos.			UEPDC	ND6	0.00	0.00	0.00								
	Reserve DID Numbers			UEPDC	NDV	0.00	0.00	0.00								
Dedicated DS1 (Interoffice Channel Mileage) - FX/FCO for 4-Wire DS1 Digital Loop with 4-Wire DDITS Trunk Port																
	Interoffice Channel Mileage - Fixed rate 0-8 miles (Facilities Termination)			UEPDC	1LNO1	75.83	145.98	109.85	19.66	14.99						
	Interoffice Channel Mileage - Additional rate per mile - 0-8 miles			UEPDC	1LNOA	0.3525	0.00	0.00								
	Interoffice Channel Mileage - Fixed rate 9-25 miles (Facilities Termination)			UEPDC	1LNO2	0.00	0.00	0.00								
	Interoffice Channel Mileage - Additional rate per mile - 9-25 miles			UEPDC	1LNOB	0.3525	0.00	0.00								
	Interoffice Channel Mileage - Fixed rate 25+ miles (Facilities Termination)			UEPDC	1LNO3	0.00	0.00	0.00								
	Interoffice Channel Mileage - Additional rate per mile - 25+ miles			UEPDC	1LNOC	0.3525	0.00	0.00								
	Local Number Portability, per DS0 Activated			UEPDC	LNPCP	3.15	0.00	0.00								
	Central Office Termininating Point			UEPDC	CTG	0.00										
4-WIRE DS1 LOOP WITH CHANNELIZATION WITH PORT																
System is 1 DS1 Loop, 1 D4 Channel Bank, and up to 24 Feature Activations																
Each System can have up to 24 combinations of rates depending on type and number of ports used																
UNE DS1 Loop																
	4-Wire DS1 Loop - UNE Zone 1		1	UEPMG	USLDC	57.73	0.00	0.00								
	4-Wire DS1 Loop - UNE Zone 2		2	UEPMG	USLDC	75.40	0.00	0.00								
	4-Wire DS1 Loop - UNE Zone 3		3	UEPMG	USLDC	98.59	0.00	0.00								
UNE DSO Channelization Capacities (D4 Channel Bank Configurations)																
	24 DSO Channel Capacity - 1 per DS1			UEPMG	VUM24	131.87	0.00	0.00					19.99	19.99		

UNBUNDLED NETWORK ELEMENTS - Tennessee													Attachment: 2		Exhibit: B	
CATEGORY	RATE ELEMENTS	Interim	Zone	BCS	USOC	RATES ($)					Svc Order Submitted Elec per LSR	Svc Order Submitted Manually per LSR	Incremental Charge - Manual Svc Order vs. Electronic-1st	Incremental Charge - Manual Svc Order vs. Electronic-Add'l	Incremental Charge - Manual Svc Order vs. Electronic-Disc 1st	Incremental Charge - Manual Svc Order vs. Electronic-Disc Add'l
						Rec	Nonrecurring		Nonrecurring Disconnect		OSS Rates($)					
							First	Add'l	First	Add'l	SOMEC	SOMAN	SOMAN	SOMAN	SOMAN	SOMAN
	48 DSO Channel Capacity - 1 per 2 DS1s			UEPMG	VUM48	263.74	0.00	0.00					19.99	19.99		
	96 DSO Channel Capacity -1per 4 DS1s			UEPMG	VUM96	527.48	0.00	0.00					19.99	19.99		
	144 DS0 Channel Capacity - 1 per 6 DS1s			UEPMG	VUM14	791.42	0.00	0.00					19.99	19.99		
	192 DS0 Channel Capacity -1 per 8 DS1s			UEPMG	VUM19	827.76	0.00	0.00					19.99	19.99		
	240 DS0 Channel Capacity - 1 per 10 DS1s			UEPMG	VUM2O	1,318.70	0.00	0.00					19.99	19.99		
	288 DS0 Channel Capacity - 1 per 12 DS1s			UEPMG	VUM28	1,582.44	0.00	0.00					19.99	19.99		
	384 DS0 Channel Capacity - 1 per 16 DS1s			UEPMG	VUM38	2,109.92	0.00	0.00					19.99	19.99		
	480 DS0 Channel Capacity - 1 per 20 DS1s			UEPMG	VUM4O	2,637.40	0.00	0.00					19.99	19.99		
	576 DS0 Channel Capacity -1 per 24 DS1s			UEPMG	VUM57	3,164.88	0.00	0.00					19.99	19.99		
	672 DS0 Channel Capacity - 1 per 28 DS1s			UEPMG	VUM67	3,692.36	0.00	0.00					19.99	19.99		
Non-Recurring Charges (NRC) Associated with 4-Wire DS1 Loop with Channeliztion with Port - Conversion Charge Based on a System																
A Minimum System configuration is One (1) DS1, One (1) D4 Channel Bank, and Up To 24 DSO Ports with Feature Activations.																
Multiples of this configuration functioning as one are considered Add'l after the minimum system configuration is counted.																
	NRC - Conversion (Currently Combined) with or without BellSouth Allowed Changes			UEPMG	USAC4	0.00	303.61	15.74					19.99	19.99		
System Additions at End User Locations Where 4-Wire DS1 Loop with Channelization with Port Combination Currently Exists and																
New (Not Currently Combined) in all states, except in Density Zone 1 of Top 8 MSA's																
	1 DS1/D4 Channel Bank - Additionally Add NRC for each Port and Assoc Fea Activation			UEPMG	VUMD4	0.00	704.68	441.48	138.36	16.41			19.99			
Bipolar 8 Zero Substitution																
	Clear Channel Capability Format, superframe - Subsequent Activity Only			UEPMG	CCOSF	0.00	0.00	590.00								
	Clear Channel Capability Format - Extended Superframe - Subsequent Activity Only			UEPMG	CCOEF	0.00	0.00	590.00								
Alternate Mark Inversion (AMI)																
	Superframe Format			UEPMG	MCOSF	0.00	0.00	0.00								
	Extended Superframe Format			UEPMG	MCOPO	0.00	0.00	0.00								
Exchange Ports Associated with 4-Wire DS1 Loop with Channelization with Port																
Exchange Ports																
	Line Side Combination Channelized PBX Trunk Port - Business			UEPPX	UEPCX	1.70	0.00	0.00	0.00	0.00			30.89	7.03		
	Line Side Outward Channelized PBX Trunk Port - Business			UEPPX	UEPOX	1.70	0.00	0.00	0.00	0.00			30.89	7.03		
	Line Side Inward Only Channelized PBX Trunk Port without DID			UEPPX	UEP1X	1.70	0.00	0.00	0.00	0.00			30.89	7.03		
	2-Wire Trunk Side Unbundled Channelized DID Trunk Port			UEPPX	UEPDM	8.97	0.00	0.00	0.00	0.00			30.89	7.03		
	Unbundled Exchange Ports, 2-Wire Channelized – Outdial – (AL, KY, LA, MS, & TN)(Conversion from Network Access Service)			UEPPX	UEPCY	1.70	0.00	0.00	0.00	0.00			30.89	7.03		
	Unbundled Exchange Ports, 2-Wire Channelized – Combination (AL, KY, LA, MS, & TN) (Conversion from Network Access Service)			UEPPX	UEPCT	1.70	0.00	0.00	0.00	0.00			30.89	7.03		
	Unbundled Exchange Ports, 2-Wire Channelized – Outdial – Tennessee Only – Calling Plan - Regionserv			UEPPX	UEPCZ	1.70	0.00	0.00	0.00	0.00			30.89	7.03		
	Unbundled Exchange Ports, 2-Wire Channelized – Two Way - Tennessee Only – Calling Plan - Regionserv			UEPPX	UEPXV	1.70	0.00	0.00	0.00	0.00			30.89	7.03		
Feature Activations - Unbundled Loop Concentration																
	Feature (Service) Activation for each Line Port Terminated in D4 Bank (includes Q.1.4, P50.1, P.50.498)			UEPPX	1PQWM	2.02	23.94	12.64	3.82	3.80			30.89	7.03		
	Feature (Service) Activation for each Trunk Port Terminated in D4 Bank (includes Q.1.4, P50.1, P.50.498)			UEPPX	1PQWU	2.02	73.67	17.37	54.09	10.57			30.89	7.03		
Telephone Number/ Group Establishment Charges for DID Service																
	DID Trunk Termination (1 per Port)			UEPPX	NDT	0.00	0.00	0.00								
	DID Numbers - groups of 20 - Valid all States			UEPPX	ND4	0.00	0.00	0.00								
	Non-Consecutive DID Numbers - per number			UEPPX	ND5	0.00	0.00	0.00								
	Reserve Non-Consecutive DID Numbers			UEPPX	ND6	0.00	0.00	0.00								
	Reserve DID Numbers			UEPPX	NDV	0.00	0.00	0.00								
Local Number Portability																
	Local Number Portability - 1 per port			UEPPX	LNPCP	3.15	0.00	0.00								
FEATURES - Vertical and Optional																

UNBUNDLED NETWORK ELEMENTS - Tennessee													Attachment: 2		Exhibit: B	
CATEGORY	RATE ELEMENTS	Interim	Zone	BCS	USOC	RATES ($)					Svc Order Submitted Elec per LSR	Svc Order Submitted Manually per LSR	Incremental Charge - Manual Svc Order vs. Electronic-1st	Incremental Charge - Manual Svc Order vs. Electronic-Add'l	Incremental Charge - Manual Svc Order vs. Electronic-Disc 1st	Incremental Charge - Manual Svc Order vs. Electronic-Disc Add'l
						Rec	Nonrecurring		Nonrecurring Disconnect		OSS Rates($)					
							First	Add'l	First	Add'l	SOMEC	SOMAN	SOMAN	SOMAN	SOMAN	SOMAN
	Local Switching Features Offered with Line Side Ports Only															
	All Features Available			UEPPX	UEPVF	0.00	0.00	0.00								
UNBUNDLED PORT LOOP COMBINATIONS - MARKET RATES																
	Market Rates shall apply where BellSouth is not required to provide unbundled local switching or switch ports per FCC and/or State Commission rules.															
	This includes:															
	Unbundled port/loop combinations that are Currently Combined or Not Currently Combined in Zone 1 of the Top 8 MSAS in BellSouth's region for end users with 4 or more DS0 equivalent lines.															
	The Top 8 MSAs in BellSouth's region are: FL (Orlando, Ft. Lauderdale, Miami); GA (Atlanta); LA (New Orleans); NC (Greensboro-Winston Salem-Highpoint/Charlotte-Gastonia-Rock Hill); TN (Nashville).															
	BellSouth currently is developing the billing capability to mechanically bill the recurring and non-recurring Market Rates in this section except for nonrecurring charges for not currently combined in FL and NC. In the interim where BellSouth cannot bill Market Rates, BellSouth shall bill the rates in the Cost-Based section preceding in lieu of the Market Rates and reserves the right to true-up the billing difference.															
	The Market Rate for unbundled ports includes all available features in all states.															
	End Office and Tandem Switching Usage and Common Transport Usage rates in the Port section of this rate exhibit shall apply to all combinations of loop/port network elements except for UNE Coin Port/Loop Combinations which have a flat rate usage charge (USOC: URECU).															
	For Not Currently Combined scenarios the Nonrecurring charges are listed in the First and Additional NRC columns for each Port USOC. For Currently Combined scenarios, the Nonrecurring charges are listed in the NRC - Currently Combined section. Additional NRCs may apply also and are categorized accordingly.															
	2-WIRE VOICE GRADE LOOP WITH 2-WIRE LINE PORT (RES)															
	UNE Port/Loop Combination Rates															
	2-Wire VG Loop/Port Combo - Zone 1		1			26.48										
	2-Wire VG Loop/Port Combo - Zone 2		2			30.31										
	2-Wire VG Loop/Port Combo - Zone 3		3			35.32										
	UNE Loop Rates															
	2-Wire Voice Grade Loop (SL1) - Zone 1		1	UEPRX	UEPLX	12.48										
	2-Wire Voice Grade Loop (SL1) - Zone 2		2	UEPRX	UEPLX	16.31										
	2-Wire Voice Grade Loop (SL1) - Zone 3		3	UEPRX	UEPLX	21.32										
	2-Wire Voice Grade Line Port (Res)															
	2-Wire voice unbundled port - residence			UEPRX	UEPRL	14.00	90.00	90.00					30.89	7.03		
	2-Wire voice unbundled port with Caller ID - res			UEPRX	UEPRC	14.00	90.00	90.00					30.89	7.03		
	2-Wire voice unbundled port outgoing only - res			UEPRX	UEPRO	14.00	90.00	90.00					30.89	7.03		
	2-Wire voice Grade unbundled Tennessee extended local dialing parity port with Caller ID - res			UEPRX	UEPAQ	14.00	90.00	90.00					30.89	7.03		
	2-Wire voice unbundled Tennessee Area Calling port with Caller ID - res (F2R)			UEPRX	UEPAK	14.00	90.00	90.00					30.89	7.03		
	2-Wire voice unbundled Tennessee Area Calling port with Caller ID - res (TACER)			UEPRX	UEPAL	14.00	90.00	90.00					30.89	7.03		
	2-Wire voice unbundled Tennessee Area Calling port with Caller ID - res (TACSR)			UEPRX	UEPAM	14.00	90.00	90.00					30.89	7.03		
	2-Wire voice unbundled Tennessee Area Calling port with Caller ID - res (1MF2X)			UEPRX	UEPAN	14.00	90.00	90.00					30.89	7.03		
	2-Wire voice unbundled Tennessee Area Calling port with Caller ID - res (2MR)			UEPRX	UEPAO	14.00	90.00	90.00					30.89	7.03		
	2-Wire voice unbundles res, low usage line port with Caller ID (LUM)			UEPRX	UEPAP	14.00	90.00	90.00					30.89	7.03		
	2-Wire voice unbundled Low Usage Line Port without Caller ID Capability			UEPRX	UEPRT	14.00	90.00	90.00					30.89	7.03		
	2-Wire Voice Unbundled Tennessee Residence Dialing Plan without Caller ID			UEPRX	UEPWN	14.00	90.00	90.00					30.89	7.03		
	2-Wire voice unbundled Tennessee Area Plus Port without Caller ID Capability			UEPRX	UEPRR	14.00	90.00	90.00					30.89	7.03		
	LOCAL NUMBER PORTABILITY															
	Local Number Portability (1 per port)			UEPRX	LNPCX	0.35										
	FEATURES															
	All Features Offered			UEPRX	UEPVF	0.00	0.00	0.00					30.89	7.03		
	NONRECURRING CHARGES - CURRENTLY COMBINED															
	2-Wire Voice Grade Loop / Line Port Combination - Switch-as-is			UEPRX	USAC2		41.50	41.50					30.89	7.03		
	2-Wire Voice Grade Loop / Line Port Combination - Switch with change			UEPRX	USACC		41.50	41.50					30.89	7.03		
	ADDITIONAL NRCs															
	NRC - 2-Wire Voice Grade Loop/Line Port Combination - Subsequent			UEPRX	USAS2	0.00	0.00	0.00					30.89	7.03		

UNBUNDLED NETWORK ELEMENTS - Tennessee													Attachment: 2		Exhibit: B	
CATEGORY	RATE ELEMENTS	Interim	Zone	BCS	USOC	RATES ($)					Svc Order Submitted Elec per LSR	Svc Order Submitted Manually per LSR	Incremental Charge - Manual Svc Order vs. Electronic-1st	Incremental Charge - Manual Svc Order vs. Electronic-Add'l	Incremental Charge - Manual Svc Order vs. Electronic-Disc 1st	Incremental Charge - Manual Svc Order vs. Electronic-Disc Add'l
						Rec	Nonrecurring		Nonrecurring Disconnect		OSS Rates($)					
							First	Add'l	First	Add'l	SOMEC	SOMAN	SOMAN	SOMAN	SOMAN	SOMAN
2-WIRE VOICE GRADE LOOP WITH 2-WIRE LINE PORT (BUS)																
UNE Port/Loop Combination Rates																
	2-Wire VG Loop/Port Combo - Zone 1		1			26.48										
	2-Wire VG Loop/Port Combo - Zone 2		2			30.31										
	2-Wire VG Loop/Port Combo - Zone 3		3			35.32										
UNE Loop Rates																
	2-Wire Voice Grade Loop (SL1) - Zone 1		1	UEPBX	UEPLX	12.48										
	2-Wire Voice Grade Loop (SL1) - Zone 2		2	UEPBX	UEPLX	16.31										
	2-Wire Voice Grade Loop (SL1) - Zone 3		3	UEPBX	UEPLX	21.32										
2-Wire Voice Grade Line Port (Bus)																
	2-Wire voice unbundled port without Caller ID - bus			UEPBX	UEPBL	14.00	90.00	90.00					30.89	7.03		
	2-Wire voice unbundled port with Caller + E484 ID - bus			UEPBX	UEPBC	14.00	90.00	90.00					30.89	7.03		
	2-Wire voice unbundled port outgoing only - bus			UEPBX	UEPBO	14.00	90.00	90.00					30.89	7.03		
	2-Wire voice Grade unbundled Tennessee extended local dialing parity port with Caller ID - bus			UEPBX	UEPAV	14.00	90.00	90.00					30.89	7.03		
	2-Wire voice unbundled Tennessee Bus 2-Way Area Calling Port Economy Option (TACC1)			UEPBX	UEPAC	14.00	90.00	90.00					30.89	7.03		
	2-Wire voice unbundled Tennessee Bus 2-Way Area Calling Port Standard Option (TACC2)			UEPBX	UEPAD	14.00	90.00	90.00					30.89	7.03		
	2-Wire voice unbundled Tennessee Bus 2-Way Collierville and Memphis Local Calling Port (B2F)			UEPBX	UEPAE	14.00	90.00	90.00					30.89	7.03		
	2-Wire voice unbundled Incoming Only Port without Caller ID Capability			UEPBX	UEPBE	14.00	90.00	90.00					30.89	7.03		
	2-Wire Voice Unbundled Tennessee Business Dialing Plan without Caller ID			UEPBX	UEPWO	14.00	90.00	90.00					30.89	7.03		
LOCAL NUMBER PORTABILITY																
	Local Number Portability (1 per port)			UEPBX	LNPCX	0.35										
FEATURES																
	All Features Offered			UEPBX	UEPVF	0.00	0.00	0.00					30.89	7.03		
NONRECURRING CHARGES - CURRENTLY COMBINED																
	2-Wire Voice Grade Loop / Line Port Combination - Switch-as-is			UEPBX	USAC2		41.50	41.50					30.89	7.03		
	2-Wire Voice Grade Loop / Line Port Combination - Switch with change			UEPBX	USACC		41.50	41.50					30.89	7.03		
ADDITIONAL NRCs																
	NRC - 2-Wire Voice Grade Loop/Line Port Combination - Subsequent			UEPBX	USAS2	0.00	0.00	0.00					30.89	7.03		
2-WIRE VOICE GRADE LOOP WITH 2-WIRE LINE PORT (RES - PBX)																
UNE Port/Loop Combination Rates																
	2-Wire VG Loop/Port Combo - Zone 1		1			26.48										
	2-Wire VG Loop/Port Combo - Zone 2		2			30.31										
	2-Wire VG Loop/Port Combo - Zone 3		3			35.32										
UNE Loop Rates																
	2-Wire Voice Grade Loop (SL1) - Zone 1		1	UEPRG	UEPLX	12.48										
	2-Wire Voice Grade Loop (SL1) - Zone 2		2	UEPRG	UEPLX	16.31										
	2-Wire Voice Grade Loop (SL1) - Zone 3		3	UEPRG	UEPLX	21.32										
2-Wire Voice Grade Line Port Rates (RES - PBX)																
	2-Wire VG Unbundled Combination 2-Way PBX Trunk Port - Res			UEPRG	UEPRD	14.00	90.00	90.00					30.89	7.03		
LOCAL NUMBER PORTABILITY																
	Local Number Portability (1 per port)			UEPRG	LNPCP	3.15	0.00	0.00								
FEATURES																
	All Features Offered			UEPRG	UEPVF	0.00	0.00	0.00					30.89	7.03		
NONRECURRING CHARGES - CURRENTLY COMBINED																
	2-Wire Voice Grade Loop/ Line Port Combination - Switch-As-Is			UEPRG	USAC2		41.50	41.50					30.89	7.03		
	2-Wire Voice Grade Loop/ Line Port Combination - Switch with Change			UEPRG	USACC		41.50	41.50					30.89	7.03		
ADDITIONAL NRCs																

UNBUNDLED NETWORK ELEMENTS - Tennessee														Attachment: 2		Exhibit: B	
CATEGORY		RATE ELEMENTS	Interim	Zone	BCS	USOC	RATES ($)					Svc Order Submitted Elec per LSR	Svc Order Submitted Manually per LSR	Incremental Charge - Manual Svc Order vs. Electronic-1st	Incremental Charge - Manual Svc Order vs. Electronic-Add'l	Incremental Charge - Manual Svc Order vs. Electronic-Disc 1st	Incremental Charge - Manual Svc Order vs. Electronic-Disc Add'l
							Rec	Nonrecurring		Nonrecurring Disconnect		OSS Rates($)					
								First	Add'l	First	Add'l	SOMEC	SOMAN	SOMAN	SOMAN	SOMAN	SOMAN
		2 Wire Loop/Line Side Port Combination - Non feature - Subsequent Activity- Nonrecurring						0.00	0.00					30.89	7.03		
		PBX Subsequent Activity - Change/Rearrange Multiline Hunt Group						14.64	14.64					30.89	7.03		
	2-WIRE VOICE GRADE LOOP WITH 2-WIRE LINE PORT (BUS - PBX)																
	UNE Port/Loop Combination Rates																
		2-Wire VG Loop/Port Combo - Zone 1		1			26.48										
		2-Wire VG Loop/Port Combo - Zone 2		2			30.31										
		2-Wire VG Loop/Port Combo - Zone 3		3			35.32										
	UNE Loop Rates																
		2-Wire Voice Grade Loop (SL1) - Zone 1		1	UEPPX	UEPLX	12.48										
		2-Wire Voice Grade Loop (SL1) - Zone 2		2	UEPPX	UEPLX	16.31										
		2-Wire Voice Grade Loop (SL1) - Zone 3		3	UEPPX	UEPLX	21.32										
	2-Wire Voice Grade Line Port Rates (BUS - PBX)																
		Line Side Unbundled Combination 2-Way PBX Trunk Port - Bus			UEPPX	UEPPC	14.00	90.00	90.00					30.89	7.03		
		Line Side Unbundled Outward PBX Trunk Port - Bus			UEPPX	UEPPO	14.00	90.00	90.00					30.89	7.03		
		Line Side Unbundled Incoming PBX Trunk Port - Bus			UEPPX	UEPP1	14.00	90.00	90.00					30.89	7.03		
		2-Wire Voice Unbundled PBX LD Terminal Ports			UEPPX	UEPLD	14.00	90.00	90.00					30.89	7.03		
		2-Wire Voice Unbundled 2-Way Combination PBX Tennessee Calling Port			UEPPX	UEPT2	14.00	90.00	90.00					30.89	7.03		
		2-Wire Voice Unbundled 1-Way Outgoing PBX Tennessee Calling Port			UEPPX	UEPTO	14.00	90.00	90.00					30.89	7.03		
		2-Wire Voice Unbundled 2-Way Combination PBX Usage Port			UEPPX	UEPXA	14.00	90.00	90.00					30.89	7.03		
		2-Wire Voice Unbundled PBX Toll Terminal Hotel Ports			UEPPX	UEPXB	14.00	90.00	90.00					30.89	7.03		
		2-Wire Voice Unbundled PBX LD DDD Terminals Port			UEPPX	UEPXC	14.00	90.00	90.00					30.89	7.03		
		2-Wire Voice Unbundled PBX LD Terminal Switchboard Port			UEPPX	UEPXD	14.00	90.00	90.00					30.89	7.03		
		2-Wire Voice Unbundled PBX LD Terminal Switchboard IDD Capable Port			UEPPX	UEPXE	14.00	90.00	90.00					30.89	7.03		
		2-Wire Voice Unbundled 2-Way PBX Hotel/Hospital Economy Administrative Calling Port			UEPPX	UEPXL	14.00	90.00	90.00					30.89	7.03		
		2-Wire Voice Unbundled 2-Way PBX Hotel/Hospital Economy Room Calling Port			UEPPX	UEPXM	14.00	90.00	90.00					30.89	7.03		
		2-Wire Voice Unbundled 1-W Out PBX Hotel/Hospital Economy Administrative Calling Port TN			UEPPX	UEPXN	14.00	90.00	90.00					30.89	7.03		
		2-Wire Voice Unbundled 1-Way Outgoing PBX Hotel/Hospital Discount Room Calling Port			UEPPX	UEPXO	14.00	90.00	90.00					30.89	7.03		
		2-Wire Voice Unbundled 1-Way Outgoing PBX Measured Port			UEPPX	UEPXS	14.00	90.00	90.00					30.89	7.03		
		2-Wire Voice Unbundled PBX Collierville and Memphis Calling Port			UEPPX	UEPXU	14.00	90.00	90.00					30.89	7.03		
		2-Wire Voice Unbundled 2-Way PBX Tennessee RegionServ Callling Port			UEPPX	UEPXV	14.00	90.00	90.00					30.89	7.03		
		Tennessee PBX 2-Way Combo Each Additional Trunk Collierville and Memphis Local Calling Plan			UEPPX	UEPA6	14.00	90.00	90.00					30.89	7.03		
		Tennessee PBX 2-Way Combo First Trunk Collierville and Memphis Local Calling Plan			UEPPX	UEPA7	14.00	90.00	90.00					30.89	7.03		
	LOCAL NUMBER PORTABILITY																
		Local Number Portability (1 per port)			UEPPX	LNPCP	3.15	0.00	0.00								
	FEATURES																
		All Features Offered			UEPPX	UEPVF	0.00	0.00	0.00					30.89	7.03		
	NONRECURRING CHARGES - CURRENTLY COMBINED																
		2-Wire Voice Grade Loop/ Line Port Combination - Switch-As-Is			UEPPX	USAC2		41.50	41.50					30.89	7.03		
		2-Wire Voice Grade Loop/ Line Port Combination - Switch with Change			UEPPX	USACC		41.50	41.50					30.89	7.03		
	ADDITIONAL NRCs																
		2-Wire Voice Grade Loop/ Line Port Combination - Subsequent			UEPPX	USAS2	0.00	0.00	0.00					30.89	7.03		

UNBUNDLED NETWORK ELEMENTS - Tennessee														Attachment: 2		Exhibit: B	
CATEGORY		RATE ELEMENTS	Interim	Zone	BCS	USOC	RATES ($)					Svc Order Submitted Elec per LSR	Svc Order Submitted Manually per LSR	Incremental Charge - Manual Svc Order vs. Electronic-1st	Incremental Charge - Manual Svc Order vs. Electronic-Add'l	Incremental Charge - Manual Svc Order vs. Electronic-Disc 1st	Incremental Charge - Manual Svc Order vs. Electronic-Disc Add'l
							Rec	Nonrecurring		Nonrecurring Disconnect		OSS Rates($)					
								First	Add'l	First	Add'l	SOMEC	SOMAN	SOMAN	SOMAN	SOMAN	SOMAN
		2 Wire Loop/Line Side Port Combination - Non feature - Subsequent Activity- Nonrecurring						0.00	0.00					30.89	7.03		
		PBX Subsequent Activity - Change/Rearrange Multiline Hunt Group						14.64	14.64					30.89	7.03		
	2-WIRE VOICE GRADE LOOP WITH 2-WIRE ANALOG LINE COIN PORT																
	UNE Port/Loop Combination Rates																
		2-Wire VG Coin Port/Loop Combo – Zone 1		1			26.48										
		2-Wire VG Coin Port/Loop Combo – Zone 2		2			30.31										
		2-Wire VG Coin Port/Loop Combo – Zone 3		3			35.32										
	UNE Loop Rates																
		2-Wire Voice Grade Loop (SL1) - Zone 1		1	UEPCO	UEPLX	12.48										
		2-Wire Voice Grade Loop (SL1) - Zone 2		2	UEPCO	UEPLX	16.31										
		2-Wire Voice Grade Loop (SL1) - Zone 3		3	UEPCO	UEPLX	21.32										
	2-Wire Voice Grade Line Port Rates (Coin)																
		2-Wire Coin 2-Way without Operator Screening and without Blocking (TN)			UEPCO	UEPTB	14.00	90.00	90.00					30.89	7.03		
		2-Wire Coin 2-Way with Operator Screening and Blocking: 011, 900/976, 1+DDD (NC, TN)			UEPCO	UEPRP	14.00	90.00	90.00					30.89	7.03		
		2-Wire Coin 2-Way with Operator Screening and 011 Blocking (TN)			UEPCO	UEPTA	14.00	90.00	90.00					30.89	7.03		
		2-Wire Coin 2-Way with Operator Screening and Blocking: 900/976, 1+DDD, 011+, and Local (NC, TN)			UEPCO	UEPCA	14.00	90.00	90.00					30.89	7.03		
		2-Wire Coin Outward with Operator Screening and 011 Blocking (TN)			UEPCO	UEPTC	14.00	90.00	90.00					30.89	7.03		
		2-Wire Coin Outward with Operator Screening and Blocking: 900/976, 1+DDD, 011+, and Local (TN)			UEPCO	UEPOT	14.00	90.00	90.00					30.89	7.03		
	LOCAL NUMBER PORTABILITY																
		Local Number Portability (1 per port)			UEPCO	LNPCX	0.35										
	NONRECURRING CHARGES - CURRENTLY COMBINED																
		2-Wire Voice Grade Loop/ Line Port Combination - Switch-As-Is			UEPCO	USAC2		41.50	41.50					30.89	7.03		
		2-Wire Voice Grade Loop/ Line Port Combination - Switch with Change			UEPCO	USACC		41.50	41.50					30.89	7.03		
	ADDITIONAL NRCs																
		2-Wire Voice Grade Loop/ Line Port Combination - Subsequent			UEPCO	USAS2	0.00	0.00	0.00					30.89	7.03		
	2-WIRE VOICE LOOP/ 2WIRE VOICE GRADE IO TRANSPORT/ 2-WIRE LINE PORT (RES)																
	UNE Port/Loop Combination Rates																
		2-Wire VG Loop/IO Tranport/Port Combo - Zone 1		1			30.56										
		2-Wire VG Loop/IO Tranport/Port Combo - Zone 2		2			35.63										
		2-Wire VG Loop/IO Tranport/Port Combo - Zone 3		3			42.28										
	UNE Loop Rates																
		2-Wire Voice Grade Loop (SL2) - Zone 1		1	UEPFR	UECF2	16.56										
		2-Wire Voice Grade Loop (SL2) - Zone 2		2	UEPFR	UECF2	21.63										
		2-Wire Voice Grade Loop (SL2) - Zone 3		3	UEPFR	UECF2	28.28										
	2-Wire Voice Grade Line Port Rates (Res)																
		2-Wire voice unbundled port - residence			UEPFR	UEPRL	14.00	115.00	75.00	40.00	30.00		15.69				
		2-Wire voice unbundled port with Caller ID - res			UEPFR	UEPRC	14.00	115.00	75.00	40.00	30.00		15.69				
		2-Wire voice unbundled port outgoing only - res			UEPFR	UEPRO	14.00	115.00	75.00	40.00	30.00		15.69				
		2-Wire voice Grade unbundled Tennessee extended local dialing parity port with Caller ID - res			UEPFR	UEPAQ	14.00	115.00	75.00	40.00	30.00		15.69				
		2-Wire voice unbundled Tennessee Area Plus with Caller ID - res (AC7)			UEPFR	UEPAH	14.00	115.00	75.00	40.00	30.00		15.69				
		2-Wire voice unbundled Tennessee Area Calling port with Caller ID - res (F2R)			UEPFR	UEPAK	14.00	115.00	75.00	40.00	30.00		15.69				
		2-Wire voice unbundled Tennessee Area Calling port with Caller ID - res (TACER)			UEPFR	UEPAL	14.00	115.00	75.00	40.00	30.00		15.69				
		2-Wire voice unbundled Tennessee Area Calling port with Caller ID - res (TACSR)			UEPFR	UEPAM	14.00	115.00	75.00	40.00	30.00		15.69				

UNBUNDLED NETWORK ELEMENTS - Tennessee														Attachment: 2		Exhibit: B	
CATEGORY		RATE ELEMENTS	Interim	Zone	BCS	USOC	RATES ($)					Svc Order Submitted Elec per LSR	Svc Order Submitted Manually per LSR	Incremental Charge - Manual Svc Order vs. Electronic-1st	Incremental Charge - Manual Svc Order vs. Electronic-Add'l	Incremental Charge - Manual Svc Order vs. Electronic-Disc 1st	Incremental Charge - Manual Svc Order vs. Electronic-Disc Add'l
							Rec	Nonrecurring		Nonrecurring Disconnect		OSS Rates($)					
								First	Add'l	First	Add'l	SOMEC	SOMAN	SOMAN	SOMAN	SOMAN	SOMAN
		2-Wire voice unbundled Tennessee Area Calling port with Caller ID - res (1MF2X)			UEPFR	UEPAN	14.00	115.00	75.00	40.00	30.00		15.69				
		2-Wire voice unbundled Tennessee Area Calling port with Caller ID - res (2MR)			UEPFR	UEPAO	14.00	115.00	75.00	40.00	30.00		15.69				
		2-Wire voice unbundles res, low usage line port with Caller ID (LUM)			UEPFR	UEPAP	14.00	115.00	75.00	40.00	30.00		15.69				
		2-Wire Voice Unbundled Tennessee Residence Dialing Plan without Caller ID			UEPFR	UEPWN	14.00	115.00	75.00	40.00	30.00		15.69				
	INTEROFFICE TRANSPORT																
		Interoffice Transport - Dedicated - 2 Wire Voice Grade - Facility Termination			UEPFR	U1TV2	18.58	55.39	17.37	27.96	3.51						
		Interoffice Transport - Dedicated - 2 Wire Voice Grade - Per Mile or Fraction Mile			UEPFR	1L5XX	0.0174										
	FEATURES																
		All Features Offered			UEPFR	UEPVF	0.00	0.00	0.00				15.69				
	LOCAL NUMBER PORTABILITY																
		Local Number Portability (1 per port)			UEPFR	LNPCX	0.35										
	NONRECURRING CHARGES (NRCs) - CURRENTLY COMBINED																
		2-Wire Loop / Dedicated IO Transport / 2 Wire Line Port Combination - Conversion - Switch-as-is			UEPFR	USAC2		16.94	3.72				15.69				
		2-Wire Loop / Dedicated IO Transport / 2 Wire Line Port Combination - Conversion - Switch-With-Change			UEPFR	USACC		16.94	3.72				15.69				
	2-WIRE VOICE LOOP/ 2WIRE VOICE GRADE IO TRANSPORT/ 2-WIRE LINE PORT (BUS)																
	UNE Port/Loop Combination Rates																
		2-Wire VG Loop/IO Tranport/Port Combo - Zone 1		1			30.56										
		2-Wire VG Loop/IO Tranport/Port Combo - Zone 2		2			35.63										
		2-Wire VG Loop/IO Tranport/Port Combo - Zone 3		3			42.28										
	UNE Loop Rates																
		2-Wire Voice Grade Loop (SL2) - Zone 1		1	UEPFB	UECF2	16.56										
		2-Wire Voice Grade Loop (SL2) - Zone 2		2	UEPFB	UECF2	21.63										
		2-Wire Voice Grade Loop (SL2) - Zone 3		3	UEPFB	UECF2	28.28										
	2-Wire Voice Grade Line Port (Bus)																
		2-Wire voice unbundled port without Caller ID - bus			UEPFB	UEPBL	14.00	115.00	75.00	40.00	30.00		15.69				
		2-Wire voice unbundled port with Caller + E484 ID - bus			UEPFB	UEPBC	14.00	115.00	75.00	40.00	30.00		15.69				
		2-Wire voice unbundled port outgoing only - bus			UEPFB	UEPBO	14.00	115.00	75.00	40.00	30.00		15.69				
		2-Wire voice Grade unbundled Tennessee extended local dialing parity port with Caller ID - bus			UEPFB	UEPAV	14.00	115.00	75.00	40.00	30.00		15.69				
		2-Wire voice unbundled incoming only port with Caller ID - Bus			UEPFB	UEPB1	14.00	115.00	75.00	40.00	30.00		15.69				
		2-Wire voice unbundled Tennessee Bus 2-Way Area Calling Port Economy Option (TACC1)			UEPFB	UEPAC	14.00	115.00	75.00	40.00	30.00		15.69				
		2-Wire voice unbundled Tennessee Bus 2-Way Area Calling Port Standard Option (TACC2)			UEPFB	UEPAD	14.00	115.00	75.00	40.00	30.00		15.69				
		2-Wire voice unbundled Tennessee Bus 2-Way Collierville and Memphis Local Calling Port (B2F)			UEPFB	UEPAE	14.00	115.00	75.00	40.00	30.00		15.69				
		2-Wire Voice Unbundled Tennessee Business Dialing Plan without Caller ID			UEPFB	UEPWO	14.00	115.00	75.00	40.00	30.00		15.69				
		Tennessee Inward Collierville and Memphis Local Calling Plan (BUS)			UEPFB	UEPB2	14.00	115.00	75.00	40.00	30.00		15.69				
		Tennessee 2-Way Collierville and Memphis Local Calling Plan (BUS)			UEPFB	UEPB3	14.00	115.00	75.00	40.00	30.00		15.69				
	LOCAL NUMBER PORTABILITY																
		Local Number Portability (1 per port)			UEPFB	LNPCX	0.35										
	INTEROFFICE TRANSPORT																
		Interoffice Transport - Dedicated - 2 Wire Voice Grade - Facility Termination			UEPFB	U1TV2	18.58	55.39	17.37	27.96	3.51						
		Interoffice Transport - Dedicated - 2 Wire Voice Grade - Per Mile or Fraction Mile			UEPFB	1L5XX	0.0174										
	FEATURES																
		All Features Offered			UEPFB	UEPVF	0.00	0.00	0.00				15.69				

UNBUNDLED NETWORK ELEMENTS - Tennessee													Attachment: 2		Exhibit: B	
CATEGORY	RATE ELEMENTS	Interim	Zone	BCS	USOC	RATES ($)					Svc Order Submitted Elec per LSR	Svc Order Submitted Manually per LSR	Incremental Charge - Manual Svc Order vs. Electronic-1st	Incremental Charge - Manual Svc Order vs. Electronic-Add'l	Incremental Charge - Manual Svc Order vs. Electronic-Disc 1st	Incremental Charge - Manual Svc Order vs. Electronic-Disc Add'l
						Rec	Nonrecurring		Nonrecurring Disconnect		OSS Rates($)					
							First	Add'l	First	Add'l	SOMEC	SOMAN	SOMAN	SOMAN	SOMAN	SOMAN
	NONRECURRING CHARGES (NRCs) - CURRENTLY COMBINED															
	2-Wire Loop / Dedicated IO Transport / 2 Wire Line Port Combination - Conversion - Switch-as-is			UEPFB	USAC2		16.94	3.72				15.69				
	2-Wire Loop / Dedicated IO Transport / 2 Wire Line Port Combination - Conversion - Switch with change			UEPFB	USACC		16.94	3.72				15.69				
	2-WIRE VOICE GRADE LOOP WITH 2-WIRE LINE PORT (BUS - PBX)															
	UNE Port/Loop Combination Rates															
	2-Wire VG Loop/IO Tranport/Port Combo - Zone 1		1			30.56										
	2-Wire VG Loop/IO Tranport/Port Combo - Zone 2		2			35.63										
	2-Wire VG Loop/IO Tranport/Port Combo - Zone 3		3			42.28										
	UNE Loop Rates															
	2-Wire Voice Grade Loop (SL2) - Zone 1		1	UEPFP	UECF2	16.56										
	2-Wire Voice Grade Loop (SL2) - Zone 2		2	UEPFP	UECF2	21.63										
	2-Wire Voice Grade Loop (SL2) - Zone 3		3	UEPFP	UECF2	28.28										
	2-Wire Voice Grade Line Port Rates (BUS - PBX)															
	Line Side Unbundled Combination 2-Way PBX Trunk Port - Bus			UEPFP	UEPPC	14.00	106.40	63.08	42.67	18.54		15.69				
	Line Side Unbundled Outward PBX Trunk Port - Bus			UEPFP	UEPPO	14.00	106.40	63.08	42.67	18.54		15.69				
	Line Side Unbundled Incoming PBX Trunk Port - Bus			UEPFP	UEPP1	14.00	106.40	63.08	42.67	18.54		15.69				
	2-Wire Voice Unbundled PBX LD Terminal Ports			UEPFP	UEPLD	14.00	106.40	63.08	42.67	18.54		15.69				
	2-Wire Voice Unbundled 2-Way Combination PBX Tennessee Calling Port			UEPFP	UEPT2	14.00	106.40	63.08	42.67	18.54		15.69				
	2-Wire Voice Unbundled 1-Way Outgoing PBX Tennessee Calling Port			UEPFP	UEPTO	14.00	106.40	63.08	42.67	18.54		15.69				
	2-Wire Voice Unbundled 2-Way Combination PBX Usage Port			UEPFP	UEPXA	14.00	106.40	63.08	42.67	18.54		15.69				
	2-Wire Voice Unbundled PBX Toll Terminal Hotel Ports			UEPFP	UEPXB	14.00	106.40	63.08	42.67	18.54		15.69				
	2-Wire Voice Unbundled PBX LD DDD Terminals Port			UEPFP	UEPXC	14.00	106.40	63.08	42.67	18.54		15.69				
	2-Wire Voice Unbundled PBX LD Terminal Switchboard Port			UEPFP	UEPXD	14.00	106.40	63.08	42.67	18.54		15.69				
	2-Wire Voice Unbundled PBX LD Terminal Switchboard IDD Capable Port			UEPFP	UEPXE	14.00	106.40	63.08	42.67	18.54		15.69				
	2-Wire Voice Unbundled 2-Way PBX Hotel/Hospital Economy Administrative Calling Port			UEPFP	UEPXL	14.00	106.40	63.08	42.67	18.54		15.69				
	2-Wire Voice Unbundled 2-Way PBX Hotel/Hospital Economy Room Calling Port			UEPFP	UEPXM	14.00	106.40	63.08	42.67	18.54		15.69				
	2-Wire Voice Unbundled 1W Out PBX Hotel/Hospital Economy Administrative Calling Port TN Calling Port			UEPFP	UEPXN	14.00	106.40	63.08	42.67	18.54		15.69				
	2-Wire Voice Unbundled 1-Way Outgoing PBX Hotel/Hospital Discount Room Calling Port			UEPFP	UEPXO	14.00	106.40	63.08	42.67	18.54		15.69				
	2-Wire Voice Unbundled 1-Way Outgoing PBX Measured Port			UEPFP	UEPXS	14.00	106.40	63.08	42.67	18.54		15.69				
	2-Wire Voice Unbundled PBX Collierville and Memphis Calling Port			UEPFP	UEPXU	14.00	106.40	63.08	42.67	18.54		15.69				
	2-Wire Voice Unbundled 2-Way PBX Tennessee RegionServ Callling Port			UEPFP	UEPXV	14.00	106.40	63.08	42.67	18.54		15.69				
	LOCAL NUMBER PORTABILITY															
	Local Number Portability (1 per port)			UEPFP	LNPCP	3.15	0.00	0.00				15.69				
	INTEROFFICE TRANSPORT															
	Interoffice Transport - Dedicated - 2 Wire Voice Grade - Facility Termination			UEPFP	U1TV2	18.58	55.39	17.37	27.96	3.51						
	Interoffice Transport - Dedicated - 2 Wire Voice Grade - Per Mile or Fraction Mile			UEPFP	1L5XX	0.0174										
	FEATURES															
	All Features Offered			UEPFP	UEPVF	0.00	0.00	0.00				15.69				
	NONRECURRING CHARGES (NRCs) - CURRENTLY COMBINED															
	2-Wire Loop / Dedicated IO Transport / 2 Wire Line Port Combination - Conversion - Switch-as-is			UEPFP	USAC2		16.94	3.72				15.69				
	2-Wire Loop / Dedicated IO Transport / 2 Wire Line Port Combination - Conversion - Switch with change			UEPFP	USACC		16.94	3.72				15.69				
UNBUNDLED PORT/LOOP COMBINATIONS - MARKET BASED RATES																
	2-WIRE VOICE GRADE LOOP- BUS ONLY - WITH 2-WIRE DID TRUNK PORT															

UNBUNDLED NETWORK ELEMENTS - Tennessee

CATEGORY	RATE ELEMENTS	Interim	Zone	BCS	USOC	RATES ($) Rec	Nonrecurring First	Nonrecurring Add'l	Nonrecurring Disconnect First	Nonrecurring Disconnect Add'l	Svc Order Submitted Elec per LSR	Svc Order Submitted Manually per LSR	Attachment: 2 Incremental Charge - Manual Svc Order vs. Electronic-1st	Attachment: 2 Incremental Charge - Manual Svc Order vs. Electronic-Add'l	Exhibit: B Incremental Charge - Manual Svc Order vs. Electronic-Disc 1st	Exhibit: B Incremental Charge - Manual Svc Order vs. Electronic-Disc Add'l
							OSS Rates($)									
											SOMEC	SOMAN	SOMAN	SOMAN	SOMAN	SOMAN
	UNE Port/Loop Combination Rates															
	2-Wire VG Loop/2-Wire DID Trunk Port Combo - UNE Zone 1		1			49.60										
	2-Wire VG Loop/2-Wire DID Trunk Port Combo - UNE Zone 2		2			51.09										
	2-Wire VG Loop/2-Wire DID Trunk Port Combo - UNE Zone 3		3			56.00										
	UNE Loop Rates															
	2-Wire Analog Voice Grade Loop - (SL2) - UNE Zone 1		1	UEPPX	UECD1	9.60										
	2-Wire Analog Voice Grade Loop - (SL2) - UNE Zone 2		2	UEPPX	UECD1	11.09										
	2-Wire Analog Voice Grade Loop - (SL2) - UNE Zone 3		3	UEPPX	UECD1	16.00										
	Exchange Ports - 2-Wire DID Port			UEPPX	UEPD1	40.00	600.00	45.00	8.45	3.91			30.89	7.03		
	NONRECURRING CHARGES - CURRENTLY COMBINED															
	2-Wire Voice Grade Loop / 2-Wire DID Trunk Port Combination - Switch-As-Is Top 8 MSAs only			UEPPX	USAC1		100.00	42.50					30.89	7.03		
	2-Wire Voice Grade Loop / 2-Wire DID Trunk Port Conversion with BellSouth Allowable Changes Top 8 MSAs only			UEPPX	USA1C		100.00	42.50					30.89	7.03		
	Telephone Number/Trunk Group Establisment Charges															
	DID Trunk Termination (One Per Port)			UEPPX	NDT	0.00	0.00	0.00								
	Additional DID Numbers for each Group of 20 DID Numbers			UEPPX	ND4	0.00	0.00	0.00								
	DID Numbers, Non- consecutive DID Numbers , Per Number			UEPPX	ND5	0.00	0.00	0.00								
	Reserve Non-Consecutive DID numbers			UEPPX	ND6	0.00	0.00	0.00								
	Reserve DID Numbers			UEPPX	NDV	0.00	0.00	0.00								
	LOCAL NUMBER PORTABILITY															
	Local Number Portability (1 per port)			UEPPX	LNPCP	3.15	0.00	0.00								
	2-WIRE ISDN DIGITAL GRADE LOOP WITH 2-WIRE ISDN DIGITAL LINE SIDE PORT															
	UNE Port/Loop Combination Rates															
	2W ISDN Digital Grade Loop/2W ISDN Digital Line Side Port - UNE Zone 1		1	UEPPB UEPPR		32.27										
	2W ISDN Digital Grade Loop/2W ISDN Digital Line Side Port - UNE Zone 2		2	UEPPB UEPPR		34.78										
	2W ISDN Digital Grade Loop/2W ISDN Digital Line Side Port - UNE Zone 3		3	UEPPB UEPPR		44.32										
	2-Wire ISDN Digital Grade Loop - UNE Zone 1		1	UEPPB UEPPR	USL2X	16.20										
	2-Wire ISDN Digital Grade Loop - UNE Zone 2		2	UEPPB UEPPR	USL2X	18.71										
	2-Wire ISDN Digital Grade Loop - UNE Zone 3		3	UEPPB UEPPR	USL2X	28.25										
	Exchange Port - 2-Wire ISDN Line Side Port			UEPPB UEPPR	UEPPB	80.00	525.00	400.00	75.00	70.00			30.89	7.03		
	NONRECURRING CHARGES - CURRENTLY COMBINED															
	2-Wire ISDN Digital Grade Loop / 2-Wire ISDN Line Side Port Combination - Conversion - Top 8 MSAs only			UEPPB UEPPR	USACB	0.00	225.00	225.00					30.89	7.03		
	ADDITIONAL NRCs															
	2-Wire ISDN Loop / 2-Wire ISDN Port Combination - Sub Actvy - Non Feature/Add Trunk			UEPPB UEPPR	USASB		212.88						30.89	7.03		
	LOCAL NUMBER PORTABILITY															
	Local Number Portability (1 per port)			UEPPB UEPPR	LNPCX	0.35	0.00	0.00								
	B-CHANNEL USER PROFILE ACCESS:															
	CVS/CSD (DMS/5ESS)			UEPPB UEPPR	U1UCA	0.00	0.00	0.00								
	CVS (EWSD)			UEPPB UEPPR	U1UCB	0.00	0.00	0.00								
	CSD			UEPPB UEPPR	U1UCC	0.00	0.00	0.00								
	B-CHANNEL AREA PLUS USER PROFILE ACCESS: (AL,KY,LA,MS SC,MS, & TN)															
	CVS/CSD (DMS/5ESS)			UEPPB UEPPR	U1UCD	0.00	0.00	0.00								
	CVS (EWSD)			UEPPB UEPPR	U1UCE	0.00	0.00	0.00								
	CSD			UEPPB UEPPR	U1UCF	0.00	0.00	0.00								
	USER TERMINAL PROFILE															
	User Terminal Profile (EWSD only)			UEPPB UEPPR	U1UMA	0.00	0.00	0.00								
	VERTICAL FEATURES															
	All Vertical Features - One per Channel B User Profile			UEPPB UEPPR	UEPVF	0.00	0.00	0.00								
	Interoffice Channel mileage each, including first mile and facilities termination			UEPPB UEPPR	M1GNC	17.91	53.99	17.37								
	Interoffice Channel mileage each, additional mile			UEPPB UEPPR	M1GNM	0.173	0.00	0.00								
	4-WIRE DS1 DIGITAL LOOP WITH 4-WIRE ISDN DS1 DIGITAL TRUNK PORT															

UNBUNDLED NETWORK ELEMENTS - Tennessee													Attachment: 2		Exhibit: B	
CATEGORY	RATE ELEMENTS	Interim	Zone	BCS	USOC	RATES ($)					Svc Order Submitted Elec per LSR	Svc Order Submitted Manually per LSR	Incremental Charge - Manual Svc Order vs. Electronic-1st	Incremental Charge - Manual Svc Order vs. Electronic-Add'l	Incremental Charge - Manual Svc Order vs. Electronic-Disc 1st	Incremental Charge - Manual Svc Order vs. Electronic-Disc Add'l
						Rec	Nonrecurring		Nonrecurring Disconnect		OSS Rates($)					
							First	Add'l	First	Add'l	SOMEC	SOMAN	SOMAN	SOMAN	SOMAN	SOMAN
	UNE Port/Loop Combination Rates															
	4W DS1 Digital Loop/4W ISDN DS1 Digital Trunk Port - UNE Zone 1		1	UEPPP		982.73										
	4W DS1 Digital Loop/4W ISDN DS1 Digital Trunk Port - UNE Zone 2		2	UEPPP		1,000.40										
	4W DS1 Digital Loop/4W ISDN DS1 Digital Trunk Port - UNE Zone 3		3	UEPPP		1,023.59										
	4-Wire DS1 Digital Loop - UNE Zone 1		1	UEPPP	USL4P	57.73										
	4-Wire DS1 Digital Loop - UNE Zone 2		2	UEPPP	USL4P	75.40										
	4-Wire DS1 Digital Loop - UNE Zone 3		3	UEPPP	USL4P	98.59										
	Exchange Ports - 4-Wire ISDN DS1 Port			UEPPP	UEPPP	925.00	950.00	950.00	130.00	100.00			30.89	7.03		
	NONRECURRING CHARGES - CURRENTLY COMBINED															
	4-Wire DS1 Digital Loop / 4-Wire ISDN DS1 Digital Trunk Port Combination - Conversion -Switch-As-Is Top 8 MSAs only			UEPPP	USACP	0.00	925.00	925.00					30.89	7.03		
	ADDITIONAL NRCs															
	4-Wire DS1 Loop/4-W ISDN Digtl Trk Port - Subsqt Actvy-Inward/two way Telephone Numbers (except NC)			UEPPP	PR7TF		0.94									
	4-Wire DS1 Loop / 4-Wire ISDN DS1 Digital Trunk Port - Outward Tel Numbers (All States except NC)			UEPPP	PR7TO		22.36	22.36								
	4-Wire DS1 Loop / 4-Wire ISDN DS1 Digital Trk Port - Subsequent Inward Telephone Numbers			UEPPP	PR7ZT		44.71	44.70								
	LOCAL NUMBER PORTABILITY															
	Local Number Portability (1 per port)			UEPPP	LNPCN	1.75										
	INTERFACE (Provsioning Only)															
	Voice/Data			UEPPP	PR71V	0.00	0.00	0.00								
	Digital Data			UEPPP	PR71D	0.00	0.00	0.00								
	Inward Data			UEPPP	PR71E	0.00	0.00	0.00								
	New or Additional "B" Channel															
	New or Additional - Voice/Data B Channel			UEPPP	PR7BV	0.00	28.39									
	New or Additional - Digital Data B Channel			UEPPP	PR7BF	0.00	29.11									
	New or Additional Inward Data B Channel			UEPPP	PR7BD	0.00	29.39									
	CALL TYPES															
	Inward			UEPPP	PR7C1	0.00	0.00	0.00								
	Outward			UEPPP	PR7CO	0.00	0.00	0.00								
	Two-way			UEPPP	PR7CC	0.00	0.00	0.00								
	Interoffice Channel Mileage															
	Fixed Each Including First Mile			UEPPP	1LN1A	76.1825	145.98	109.85	19.55							
	Each Airline-Fractional Additional Mile			UEPPP	1LN1B	0.3525										
	4-WIRE DS1 DIGITAL LOOP WITH 4-WIRE DDITS TRUNK PORT															
	UNE Port/Loop Combination Rates															
	4W DS1 Digital Loop/4W DDITS Trunk Port - UNE Zone 1		1	UEPDC		93.28										
	4W DS1 Digital Loop/4W DDITS Trunk Port - UNE Zone 2		2	UEPDC		110.95										
	4W DS1 Digital Loop/4W DDITS Trunk Port - UNE Zone 3		3	UEPDC		134.14										
	UNE Loop Rates															
	4-Wire DS1 Digital Loop - UNE Zone 1		1	UEPDC	USLDC	57.53										
	4-Wire DS1 Digital Loop - UNE Zone 2		2	UEPDC	USLDC	75.40										
	4-Wire DS1 Digital Loop - UNE Zone 3		3	UEPDC	USLDC	98.59										
	UNE Port Rate															
	4-Wire DDITS Digital Trunk Port			UEPDC	UDD1T	750.00	982.57	450.10	196.09	19.23			30.89	7.03		
	NONRECURRING CHARGES - CURRENTLY COMBINED															
	4-Wire DS1 Digital Loop / 4-Wire DDITS Trunk Port Combination - Switch-As-Is Top 8 MSAs only			UEPDC	USAC4		312.91	312.91					30.89	7.03		
	4-Wire DS1 Digital Loop / 4-Wire DDITS Trunk Port Combination - Conversion with DS1 Changes Top 8 MSAs only			UEPDC	USAWA		312.91	312.91					30.89	7.03		
	4-Wire DS1 Digital Loop / 4-Wire DDITS Trunk Port Combination - Conversion with Change - Trunk Top 8 MSAs only			UEPDC	USAWB		312.91	312.91					30.89	7.03		
	ADDITIONAL NRCs															

CATEGORY	RATE ELEMENTS	Interim	Zone	BCS	USOC	RATES ($)					Svc Order Submitted Elec per LSR	Svc Order Submitted Manually per LSR	Incremental Charge - Manual Svc Order vs. Electronic-1st	Incremental Charge - Manual Svc Order vs. Electronic-Add'l	Incremental Charge - Manual Svc Order vs. Electronic-Disc 1st	Incremental Charge - Manual Svc Order vs. Electronic-Disc Add'l
						Rec	Nonrecurring		Nonrecurring Disconnect		OSS Rates($)					
							First	Add'l	First	Add'l	SOMEC	SOMAN	SOMAN	SOMAN	SOMAN	SOMAN
	4-Wire DS1 Loop / 4-Wire DDITS Trunk Port - Subsequent Service Activity Per Service Order			UEPDC	USAS4		94.88	94.88								
	4-Wire DS1 Loop / 4-Wire DDITS Trunk Port - NRC - Subsequent Channel Activation/Chan - 2-Way Trunk			UEPDC	UDTTA		108.67	108.67					30.89	7.03		
	4-Wire DS1 Loop / 4-Wire DDITS Trunk Port - Subsequent Channel Activation/Chan - 1-Way Outward Trunk			UEPDC	UDTTB		108.67	108.67					30.89	7.03		
	4-Wire DS1 Loop / 4-Wire DDITS Trunk Port - Subsqnt Channel Activation/Chan Inward Trunk w/out DID			UEPDC	UDTTC		108.67	108.67					30.89	7.03		
	4-Wire DS1 Loop / 4-Wire DDITS Trunk Port - Subsqnt Chan Activation Per Chan - Inward Trunk with DID			UEPDC	UDTTD		108.67	108.67					30.89	7.03		
	4-Wire DS1 Loop / 4-Wire DDITS Trunk Port - Subsqnt Chan Activation / Chan - 2-Way DID w User Trans			UEPDC	UDTTE		108.67	108.67					30.89	7.03		
BIPOLAR 8 ZERO SUBSTITUTION																
	B8ZS -Superframe Format			UEPDC	CCOSF		0.00	590.00								
	B8ZS - Extended Superframe Format			UEPDC	CCOEF		0.00	590.00								
Alternate Mark Inversion																
	AMI -Superframe Format			UEPDC	MCOSF		0.00	0.00								
	AMI - Extended SuperFrame Format			UEPDC	MCOPO		0.00	0.00								
Telephone Number/Trunk Group Establisment Charges																
	Telephone Number for 2-Way Trunk Group			UEPDC	UDTGX	0.00										
	Telephone Number for 1-Way Outward Trunk Group			UEPDC	UDTGY	0.00										
	Telephone Number for 1-Way Inward Trunk Group Without DID			UEPDC	UDTGZ	0.00										
	DID Numbers, Establish Trunk Group and Provide First Group of 20 DID Numbers			UEPDC	NDZ	0.00	0.00	0.00								
	DID Numbers for each Group of 20 DID Numbers			UEPDC	ND4	0.00										
	DID Numbers, Non- consecutive DID Numbers , Per Number			UEPDC	ND5	0.00										
	Reserve Non-Consecutive DID Nos.			UEPDC	ND6	0.00	0.00	0.00								
	Reserve DID Numbers			UEPDC	NDV	0.00	0.00	0.00								
Dedicated DS1 (Interoffice Channel Mileage) -																
FX/FCO for 4-Wire DS1 Digital Loop with 4-Wire DDITS Trunk Port																
	Interoffice Channel Mileage - Fixed rate 0-8 miles (Facilities Termination)			UEPDC	1LNO1	75.83	145.98	109.85	19.66	14.99						
	Interoffice Channel Mileage - Additional rate per mile - 0-8 miles			UEPDC	1LNOA	0.3525	0.00	0.00								
	Interoffice Channel Mileage - Fixed rate 9-25 miles (Facilities Termination)			UEPDC	1LNO2	0.00	0.00	0.00								
	Interoffice Channel Mileage - Additional rate per mile - 9-25 miles			UEPDC	1LNOB	0.3525	0.00	0.00								
	Interoffice Channel Mileage - Fixed rate 25+ miles (Facilities Termination)			UEPDC	1LNO3	0.00	0.00	0.00								
	Interoffice Channel Mileage - Additional rate per mile - 25+ miles			UEPDC	1LNOC	0.3525	0.00	0.00								
	Local Number Portability, per DS0 Activated			UEPDC	LNPCP	3.15	0.00	0.00								
	Central Office Termininating Point			UEPDC	CTG	0.00										
4-WIRE DS1 LOOP WITH CHANNELIZATION WITH PORT																
System is 1 DS1 Loop, 1 D4 Channel Bank, and up to 24 Feature Activations																
A system can have various rate combinations based on type and number of ports used																
UNE DS1 Loop																
	4-Wire DS1 Loop - UNE Zone 1		1	UEPMG	USLDC	57.73	0.00	0.00								
	4-Wire DS1 Loop - UNE Zone 2		2	UEPMG	USLDC	75.40	0.00	0.00								
	4-Wire DS1 Loop - UNE Zone 3		3	UEPMG	USLDC	98.59	0.00	0.00								
UNE DSO Channelization Capacities (D4 Channel Bank Configurations)																
	24 DSO Channel Capacity - 1 per DS1			UEPMG	VUM24	131.87	0.00	0.00					30.89	7.03		
	48 DSO Channel Capacity - 1 per 2 DS1s			UEPMG	VUM48	263.74	0.00	0.00					30.89	7.03		
	96 DSO Channel Capacity -1per 4 DS1s			UEPMG	VUM96	527.48	0.00	0.00					30.89	7.03		
	144 DS0 Channel Capacity - 1 per 6 DS1s			UEPMG	VUM14	791.42	0.00	0.00					30.89	7.03		
	192 DS0 Channel Capacity -1 per 8 DS1s			UEPMG	VUM19	827.76	0.00	0.00					30.89	7.03		
	240 DS0 Channel Capacity - 1 per 10 DS1s			UEPMG	VUM2O	1,318.70	0.00	0.00					30.89	7.03		
	288 DS0 Channel Capacity - 1 per 12 DS1s			UEPMG	VUM28	1,582.44	0.00	0.00					30.89	7.03		

UNBUNDLED NETWORK ELEMENTS - Tennessee													Attachment: 2		Exhibit: B	
CATEGORY	RATE ELEMENTS	Interim	Zone	BCS	USOC	RATES ($)					Svc Order Submitted Elec per LSR	Svc Order Submitted Manually per LSR	Incremental Charge - Manual Svc Order vs. Electronic-1st	Incremental Charge - Manual Svc Order vs. Electronic-Add'l	Incremental Charge - Manual Svc Order vs. Electronic-Disc 1st	Incremental Charge - Manual Svc Order vs. Electronic-Disc Add'l
						Rec	Nonrecurring		Nonrecurring Disconnect				OSS Rates($)			
							First	Add'l	First	Add'l	SOMEC	SOMAN	SOMAN	SOMAN	SOMAN	SOMAN
	384 DS0 Channel Capacity - 1 per 16 DS1s			UEPMG	VUM38	2,109.92	0.00	0.00					30.89	7.03		
	480 DS0 Channel Capacity - 1 per 20 DS1s			UEPMG	VUM4O	2,637.40	0.00	0.00					30.89	7.03		
	576 DS0 Channel Capacity -1 per 24 DS1s			UEPMG	VUM57	3,164.88	0.00	0.00					30.89	7.03		
	672 DS0 Channel Capacity - 1 per 28 DS1s			UEPMG	VUM67	3,692.36	0.00	0.00					30.89	7.03		
Non-Recurring Charges (NRC) Associated with 4-Wire DS1 Loop with Channeliztion with Port - Conversion Charge Based on a System																
A Minimum System configuration is One (1) DS1, One (1) D4 Channel Bank, and Up To 24 DSO Ports with Feature Activations.																
Multiples of this configuration functioning as one are considered Add'l after the minimum system configuration is counted.																
	NRC - Conversion (Currently Combined) with or without BellSouth Allowed Changes - Top 8 MSAs Only			UEPMG	USAC4	0.00	303.61	15.74					30.89	7.03		
System Additions Where Currently Combined and New (Not Currently Combined)																
In Density Zone 1 Top 8 MSAs																
	1 DS1/D4 Channel Bank - Add NRC for each Port and Assoc Fea Activation -			UEPMG	VUMD4	0.00	704.68	441.48	138.36	16.41			30.89	7.03		
Bipolar 8 Zero Substitution																
	Clear Channel Capability Format, superframe - Subsequent Activity Only			UEPMG	CCOSF	0.00	0.00	590.00								
	Clear Channel Capability Format - Extended Superframe - Subsequent Activity Only			UEPMG	CCOEF	0.00	0.00	590.00								
Alternate Mark Inversion (AMI)																
	Superframe Format			UEPMG	MCOSF	0.00	0.00	0.00								
	Extended Superframe Format			UEPMG	MCOPO	0.00	0.00	0.00								
Exchange Ports Associated with 4-Wire DS1 Loop with Channelization with Port																
Exchange Ports																
	Line Side Combination Channelized PBX Trunk Port - Business			UEPPX	UEPCX	14.00	0.00	0.00	0.00	0.00			30.89	7.03		
	Line Side Outward Channelized PBX Trunk Port - Business			UEPPX	UEPOX	14.00	0.00	0.00	0.00	0.00			30.89	7.03		
	Line Side Inward Only Channelized PBX Trunk Port without DID			UEPPX	UEP1X	14.00	0.00	0.00	0.00	0.00			30.89	7.03		
	2-Wire Trunk Side Unbundled Channelized DID Trunk Port			UEPPX	UEPDM	40.00	0.00	0.00	0.00	0.00			30.89	7.03		
	Unbundled Exchange Ports, 2-Wire Channelized – Outdial – (AL, KY, LA, MS, & TN)			UEPPX	UEPCY	14.00	0.00	0.00	0.00	0.00			30.89	7.03		
	Unbundled Exchange Ports, 2-Wire Channelized – Combination (AL, KY, LA, MS, & TN			UEPPX	UEPCT	14.00	0.00	0.00	0.00	0.00			30.89	7.03		
	Unbundled Exchange Ports, 2-Wire Channelized – Outdial – Tennessee Only – Calling Plan - Regionserv			UEPPX	UEPCZ	14.00	0.00	0.00	0.00	0.00			30.89	7.03		
	Unbundled Exchange Ports, 2-Wire Channelized – Two Way - Tennessee Only – Calling Plan - Regionserv			UEPPX	UEPXV	14.00	0.00	0.00	0.00	0.00			30.89	7.03		
Feature Activations - Unbundled Loop Concentration																
	Feature (Service) Activation for each Line Port Terminated in D4 Bank (includes Q.1.4, P.50.1, & P.50.498)			UEPPX	1PQWM	2.02	40.00	20.00	6.00	5.00						
	Feature (Service) Activation for each Trunk Port Terminated in D4 Bank (includes Q.1.4, P.50.1, & P.50.498)			UEPPX	1PQWU	2.02	110.00	30.00	75.00	15.00						
Telephone Number/ Group Establishment Charges for DID Service																
	DID Trunk Termination (1 per Port)			UEPPX	NDT	0.00	0.00	0.00								
	DID Numbers - groups of 20 - Valid all States			UEPPX	ND4	0.00	0.00	0.00								
	Non-Consecutive DID Numbers - per number			UEPPX	ND5	0.00	0.00	0.00								
	Reserve Non-Consecutive DID Numbers			UEPPX	ND6	0.00	0.00	0.00								
	Reserve DID Numbers			UEPPX	NDV	0.00	0.00	0.00								
Local Number Portability																
	Local Number Portability - 1 per port			UEPPX	LNPCP	3.15	0.00	0.00								
FEATURES - Vertical and Optional																
Local Switching Features Offered with Line Side Ports Only																
	All Features Available			UEPPX	UEPVF	0.00	0.00	0.00								
UNBUNDLED CENTREX PORT/LOOP COMBINATIONS - COST BASED RATES																
1. Cost Based Rates are applied where BellSouth is required by FCC and/or State Commission rule to provide Unbundled Local Switching or Switch Ports.																
2. Features shall apply to the Unbundled Port/Loop Combination - Cost Based Rate section in the same manner as they are applied to the Stand-Alone Unbundled Port section of this Rate Exhibit.																
3. End Office and Tandem Switching Usage and Common Transport Usage rates in the Port section of this rate exhibit shall apply to all combinations of loop/port network elements except for UNE Coin Port/Loop Combinations.																
4. The first and additional Port nonrecurring charges apply to Not Currently Combined Combos. For Currently Combined Combos, the nonrecurring charges shall be those identified in the Nonrecurring - Currently Combined sections. Additional NRCs may apply also and are categorized accordingly.																

UNBUNDLED NETWORK ELEMENTS - Tennessee													Attachment: 2		Exhibit: B	
CATEGORY	RATE ELEMENTS	Interim	Zone	BCS	USOC	RATES ($)					Svc Order Submitted Elec per LSR	Svc Order Submitted Manually per LSR	Incremental Charge - Manual Svc Order vs. Electronic-1st	Incremental Charge - Manual Svc Order vs. Electronic-Add'l	Incremental Charge - Manual Svc Order vs. Electronic-Disc 1st	Incremental Charge - Manual Svc Order vs. Electronic-Disc Add'l
						Rec	Nonrecurring		Nonrecurring Disconnect		OSS Rates($)					
							First	Add'l	First	Add'l	SOMEC	SOMAN	SOMAN	SOMAN	SOMAN	SOMAN
	5. Market Rates for Unbundled Centrex Port/Loop Combination will be negotiated on an Individual Case Basis, until further notice.															
	UNE-P CENTREX - 1AESS - (Valid in AL,FL,GA,KY,LA,MS,&TN only)															
	2-Wire VG Loop/2-Wire Voice Grade Port (Centrex) Combo															
	UNE Port/Loop Combination Rates (Non-Design)															
	2-Wire VG Loop/2-Wire Voice Grade Port (Centrex) Port Combo - Non-Design		1	UEP91		14.18										
	2-Wire VG Loop/2-Wire Voice Grade Port (Centrex)Port Combo - Non-Design		2	UEP91		18.01										
	2-Wire VG Loop/2-Wire Voice Grade Port (Centrex)Port Combo - Non-Design		3	UEP91		23.02										
	UNE Port/Loop Combination Rates (Design)															
	2-Wire VG Loop/2-Wire Voice Grade Port (Centrex) Port Combo - Design		1	UEP91		18.26										
	2-Wire VG Loop/2-Wire Voice Grade Port (Centrex)Port Combo - Design		2	UEP91		23.33										
	2-Wire VG Loop/2-Wire Voice Grade Port (Centrex)Port Combo - Design		3	UEP91		29.98										
	UNE Loop Rate															
	2-Wire Voice Grade Loop (SL 1) - Zone 1		1	UEP91	UECS1	12.48										
	2-Wire Voice Grade Loop (SL 1) - Zone 2		2	UEP91	UECS1	16.31										
	2-Wire Voice Grade Loop (SL 1) - Zone 3		3	UEP91	UECS1	21.32										
	2-Wire Voice Grade Loop (SL 2) - Zone 1		1	UEP91	UECS2	16.56										
	2-Wire Voice Grade Loop (SL 2) - Zone 2		2	UEP91	UECS2	21.63										
	2-Wire Voice Grade Loop (SL 2) - Zone 3		3	UEP91	UECS2	28.28										
	UNE Ports															
	All States (Except North Carolina and Sout Carolina)															
	2-Wire Voice Grade Port (Centrex) Basic Local Area			UEP91	UEPYA	1.70	22.14	15.25	8.45	3.91		30.89	7.03			
	2-Wire Voice Grade Port (Centrex 800 termination)Basic Local Area			UEP91	UEPYB	1.70	22.14	15.25	8.45	3.91		30.89	7.03			
	2-Wire Voice Grade Port (Centrex with Caller ID)1Basic Local Area			UEP91	UEPYH	1.70	22.14	15.25	8.45	3.91		30.89	7.03			
	2-Wire Voice Grade Port (Centrex from diff Serving Wire Center)2 Basic Local Area			UEP91	UEPYM	1.70	22.14	15.25	8.45	3.91		30.89	7.03			
	2-Wire Voice Grade Port, Diff Serving Wire Center - 800 Service Term - Basic Local Area			UEP91	UEPYZ	1.70	22.14	15.25	8.45	3.91		30.89	7.03			
	2-Wire Voice Grade Port terminated in on Megalink or equivalent - Basic Local Area			UEP91	UEPY9	1.70	22.14	15.25	8.45	3.91		30.89	7.03			
	2-Wire Voice Grade Port Terminated on 800 Service Term - Basic Local Area			UEP91	UEPY2	1.70	22.14	15.25	8.45	3.91		30.89	7.03			
	AL, KY, LA, MS, & TN Only															
	2-Wire Voice Grade Port (Centrex)			UEP91	UEPQA	1.70	22.14	15.25	8.45	3.91		30.89	7.03			
	2-Wire Voice Grade Port (Centrex 800 termination)			UEP91	UEPQB	1.70	22.14	15.25	8.45	3.91		30.89	7.03			
	2-Wire Voice Grade Port (Centrex with Caller ID)1			UEP91	UEPQH	1.70	22.14	15.25	8.45	3.91		30.89	7.03			
	2-Wire Voice Grade Port (Centrex from diff Serving Wire Center)2			UEP91	UEPQM	1.70	22.14	15.25	8.45	3.91		30.89	7.03			
	2-Wire Voice Grade Port, Diff Serving Wire Center - 800 Service Term			UEP91	UEPQZ	1.70	22.14	15.25	8.45	3.91		30.89	7.03			
	2-Wire Voice Grade Port terminated in on Megalink or equivalent			UEP91	UEPQ9	1.70	22.14	15.25	8.45	3.91		30.89	7.03			
	2-Wire Voice Grade Port Terminated on 800 Service Term			UEP91	UEPQ2	1.70	22.14	15.25	8.45	3.91		30.89	7.03			
	Local Switching															
	Centrex Intercom Funtionality, per port			UEP91	URECS	0.6381										
	Local Number Portability															
	Local Number Portability (1 per port)			UEP91	LNPCC	0.35										
	Features															
	All Standard Features Offered, per port			UEP91	UEPVF	0.00						30.89	7.03			
	All Select Features Offered, per port			UEP91	UEPVS	0.00	433.78					30.89	7.03			
	All Centrex Control Features Offered, per port			UEP91	UEPVC	0.00						30.89	7.03			
	NARS															

CATEGORY	RATE ELEMENTS	Interim	Zone	BCS	USOC	RATES ($) Rec	Nonrecurring First	Nonrecurring Add'l	Nonrecurring Disconnect First	Nonrecurring Disconnect Add'l	Svc Order Submitted Elec per LSR	Svc Order Submitted Manually per LSR	Attachment: 2 Incremental Charge - Manual Svc Order vs. Electronic-1st	Attachment: 2 Incremental Charge - Manual Svc Order vs. Electronic-Add'l	Exhibit: B Incremental Charge - Manual Svc Order vs. Electronic-Disc 1st	Exhibit: B Incremental Charge - Manual Svc Order vs. Electronic-Disc Add'l
											OSS Rates($)					
											SOMEC	SOMAN	SOMAN	SOMAN	SOMAN	SOMAN
	Unbundled Network Access Register - Combination			UEP91	UARCX	0.00	0.00	0.00				30.89	7.03			
	Unbundled Network Access Register - Indial			UEP91	UAR1X	0.00	0.00	0.00				30.89	7.03			
	Unbundled Network Access Register - Outdial			UEP91	UAROX	0.00	0.00	0.00				30.89	7.03			
Miscellaneous Terminations																
2-Wire Trunk Side																
	Trunk Side Terminations, each			UEP91	CENA6	8.78	22.14	15.25	8.45	3.91		30.89	7.03			
Interoffice Channel Mileage - 2-Wire																
	Interoffice Channel Facilities Termination - Voice Grade			UEP91	M1GBC	18.58	22.14	15.25	8.45	3.91		30.89	7.03			
	Interoffice Channel mileage, per mile or fraction of mile			UEP91	M1GBM	0.0174										
Feature Activations (DS0) Centrex Loops on Channelized DS1 Service																
D4 Channel Bank Feature Activations																
	Feature Activation on D-4 Channel Bank Centrex Loop Slot			UEP91	1PQWS	0.66										
	Feature Activation on D-4 Channel Bank FX line Side Loop Slot			UEP91	1PQW6	0.66										
	Feature Activation on D-4 Channel Bank FX Trunk Side Loop Slot			UEP91	1PQW7	0.66										
	Feature Activation on D-4 Channel Bank Centrex Loop Slot - Different Wire Center			UEP91	1PQWP	0.66										
	Feature Activation on D-4 Channel Bank Private Line Loop Slot			UEP91	1PQWV	0.66										
	Feature Activation on D-4 Channel Bank Tjie Line/Trunk Loop Slot			UEP91	1PQWQ	0.66										
	Feature Activation on D-4 Channel Bank WATS Loop Slot			UEP91	1PQWA	0.66										
Non-Recurring Charges (NRC) Associated with UNE-P Centrex																
	Conversion - Currently Combined Switch-As-Is with allowed changes, per port			UEP91	USAC2		1.03	0.29				30.89	7.03			
	New Centrex Standard Common Block			UEP91	M1ACS	0.00	658.60					30.89	7.03			
	New Centrex Customized Common Block			UEP91	M1ACC	0.00	658.60					30.89	7.03			
	Secondary Block, per Block			UEP91	M2CC1	0.00	73.55					30.89	7.03			
	NAR Establishment Charge, Per Occasion			UEP91	URECA		68.57					30.89	7.03			
UNE-P CENTREX - 5ESS (Valid in All States)																
2-Wire VG Loop/2-Wire Voice Grade Port (Centrex) Combo																
UNE Port/Loop Combination Rates (Non-Design)																
	2-Wire VG Loop/2-Wire Voice Grade Port (Centrex) Port Combo - Non-Design		1	UEP95		14.18										
	2-Wire VG Loop/2-Wire Voice Grade Port (Centrex)Port Combo - Non-Design		2	UEP95		18.01										
	2-Wire VG Loop/2-Wire Voice Grade Port (Centrex)Port Combo - Non-Design		3	UEP95		23.02										
UNE Port/Loop Combination Rates (Design)																
	2-Wire VG Loop/2-Wire Voice Grade Port (Centrex) Port Combo - Design		1	UEP95		18.26										
	2-Wire VG Loop/2-Wire Voice Grade Port (Centrex)Port Combo - Design		2	UEP95		23.33										
	2-Wire VG Loop/2-Wire Voice Grade Port (Centrex)Port Combo - Design		3	UEP95		29.98										
UNE Loop Rate																
	2-Wire Voice Grade Loop (SL 1) - Zone 1		1	UEP95	UECS1	12.48										
	2-Wire Voice Grade Loop (SL 1) - Zone 2		2	UEP95	UECS1	16.31										
	2-Wire Voice Grade Loop (SL 1) - Zone 3		3	UEP95	UECS1	21.32										
	2-Wire Voice Grade Loop (SL 2) - Zone 1		1	UEP95	UECS2	16.56										
	2-Wire Voice Grade Loop (SL 2) - Zone 2		2	UEP95	UECS2	21.63										
	2-Wire Voice Grade Loop (SL 2) - Zone 3		3	UEP95	UECS2	28.28										
UNE Port Rate																
All States																
	2-Wire Voice Grade Port (Centrex) Basic Local Area			UEP95	UEPYA	1.70	22.14	15.25	8.45	3.91		30.89	7.03			
	2-Wire Voice Grade Port (Centrex 800 termination)			UEP95	UEPYB	1.70	22.14	15.25	8.45	3.91		30.89	7.03			
	2-Wire Voice Grade Port (Centrex with Caller ID)1Basic Local Area			UEP95	UEPYH	1.70	22.14	15.25	8.45	3.91		30.89	7.03			

UNBUNDLED NETWORK ELEMENTS - Tennessee														Attachment: 2		Exhibit: B	
CATEGORY		RATE ELEMENTS	Interim	Zone	BCS	USOC	RATES ($)					Svc Order Submitted Elec per LSR	Svc Order Submitted Manually per LSR	Incremental Charge - Manual Svc Order vs. Electronic-1st	Incremental Charge - Manual Svc Order vs. Electronic-Add'l	Incremental Charge - Manual Svc Order vs. Electronic-Disc 1st	Incremental Charge - Manual Svc Order vs. Electronic-Disc Add'l
							Rec	Nonrecurring		Nonrecurring Disconnect				OSS Rates($)			
								First	Add'l	First	Add'l	SOMEC	SOMAN	SOMAN	SOMAN	SOMAN	SOMAN
		2-Wire Voice Grade Port (Centrex from diff Serving Wire Center)2 Basic Local Area			UEP95	UEPYM	1.70	22.14	15.25	8.45	3.91		30.89	7.03			
		2-Wire Voice Grade Port, Diff Serving Wire Center - 800 Service Term - Basic Local Area			UEP95	UEPYZ	1.70	22.14	15.25	8.45	3.91		30.89	7.03			
		2-Wire Voice Grade Port terminated in on Megalink or equivalent - Basic Local Area			UEP95	UEPY9	1.70	22.14	15.25	8.45	3.91		30.89	7.03			
		2-Wire Voice Grade Port Terminated on 800 Service Term - Basic Local Area			UEP95	UEPY2	1.70	22.14	15.25	8.45	3.91		30.89	7.03			
	AL, KY, LA, MS, SC, & TN Only																
		2-Wire Voice Grade Port (Centrex)			UEP95	UEPQA	1.70	22.14	15.25	8.45	3.91		30.89	7.03			
		2-Wire Voice Grade Port (Centrex 800 termination)			UEP95	UEPQB	1.70	22.14	15.25	8.45	3.91		30.89	7.03			
		2-Wire Voice Grade Port (Centrex with Caller ID)1			UEP95	UEPQH	1.70	22.14	15.25	8.45	3.91		30.89	7.03			
		2-Wire Voice Grade Port (Centrex from diff Serving Wire Center)2			UEP95	UEPQM	1.70	22.14	15.25	8.45	3.91		30.89	7.03			
		2-Wire Voice Grade Port, Diff Serving Wire Center - 800 Service Term			UEP95	UEPQZ	1.70	22.14	15.25	8.45	3.91		30.89	7.03			
		2-Wire Voice Grade Port terminated in on Megalink or equivalent			UEP95	UEPQ9	1.70	22.14	15.25	8.45	3.91		30.89	7.03			
		2-Wire Voice Grade Port Terminated on 800 Service Term			UEP95	UEPQ2	1.70	22.14	15.25	8.45	3.91		30.89	7.03			
	FL & GA Only																
	Local Switching																
		Centrex Intercom Funtionality, per port			UEP95	URECS	0.6381										
	Local Number Portability																
		Local Number Portability (1 per port)			UEP95	LNPCC	0.35										
	Features																
		All Standard Features Offered, per port			UEP95	UEPVF	0.00						30.89	7.03			
		All Select Features Offered, per port			UEP95	UEPVS	0.00	433.78					30.89	7.03			
		All Centrex Control Features Offered, per port			UEP95	UEPVC	0.00						30.89	7.03			
	NARS																
		Unbundled Network Access Register - Combination			UEP95	UARCX	0.00	0.00	0.00				30.89	7.03			
		Unbundled Network Access Register - Indial			UEP95	UAR1X	0.00	0.00	0.00				30.89	7.03			
		Unbundled Network Access Register - Outdial			UEP95	UAROX	0.00	0.00	0.00				30.89	7.03			
	Miscellaneous Terminations																
	2-Wire Trunk Side																
		Trunk Side Terminations, each			UEP95	CEND6	8.78	47.75	47.01	9.21	8.47		30.89	7.03			
	4-Wire Digital (1.544 Megabits)																
		DS1 Circuit Terminations, each			UEP95	M1HD1	35.55	75.93	38.15				30.89	7.03			
		DS0 Channels Activated, each			UEP95	M1HDO	0.00	108.67					30.89	7.03			
	Interoffice Channel Mileage - 2-Wire																
		Interoffice Channel Facilities Termination			UEP95	M1GBC	18.58	22.14	15.25	8.45	3.91		30.89	7.03			
		Interoffice Channel mileage, per mile or fraction of mile			UEP95	M1GBM	0.0174										
	Feature Activations (DS0) Centrex Loops on Channelized DS1 Service																
	D4 Channel Bank Feature Activations																
		Feature Activation on D-4 Channel Bank Centrex Loop Slot			UEP95	1PQWS	0.66										
		Feature Activation on D-4 Channel Bank FX line Side Loop Slot			UEP95	1PQW6	0.66										
		Feature Activation on D-4 Channel Bank FX Trunk Side Loop Slot			UEP95	1PQW7	0.66										
		Feature Activation on D-4 Channel Bank Centrex Loop Slot - Different Wire Center			UEP95	1PQWP	0.66										
		Feature Activation on D-4 Channel Bank Private Line Loop Slot			UEP95	1PQWV	0.66										
		Feature Activation on D-4 Channel Bank Tjie Line/Trunk Loop Slot			UEP95	1PQWQ	0.66										
		Feature Activation on D-4 Channel Bank WATS Loop Slot			UEP95	1PQWA	0.66										
	Non-Recurring Charges (NRC) Associated with UNE-P Centrex																
		NRC Conversion Currently Combined Switch-As-Is with allowed changes, per port			UEP95	USAC2		1.03	0.29				30.89	7.03			
		New Centrex Standard Common Block			UEP95	M1ACS	0.00	658.60					30.89	7.03			

UNBUNDLED NETWORK ELEMENTS - Tennessee														Attachment: 2		Exhibit: B	
CATEGORY		RATE ELEMENTS	Interim	Zone	BCS	USOC	RATES ($)					Svc Order Submitted Elec per LSR	Svc Order Submitted Manually per LSR	Incremental Charge - Manual Svc Order vs. Electronic-1st	Incremental Charge - Manual Svc Order vs. Electronic-Add'l	Incremental Charge - Manual Svc Order vs. Electronic-Disc 1st	Incremental Charge - Manual Svc Order vs. Electronic-Disc Add'l
							Rec	Nonrecurring		Nonrecurring Disconnect		OSS Rates($)					
								First	Add'l	First	Add'l	SOMEC	SOMAN	SOMAN	SOMAN	SOMAN	SOMAN
		New Centrex Customized Common Block			UEP95	M1ACC	0.00	658.60					30.89	7.03			
		NAR Establishment Charge, Per Occasion			UEP95	URECA	0.00	68.57					30.89	7.03			
	UNE-P CENTREX - DMS100 (Valid in All States)																
	2-Wire VG Loop/2-Wire Voice Grade Port (Centrex) Combo																
	UNE Port/Loop Combination Rates (Non-Design)																
		2-Wire VG Loop/2-Wire Voice Grade Port (Centrex) Port Combo - Non-Design		1	UEP9D		14.18										
		2-Wire VG Loop/2-Wire Voice Grade Port (Centrex)Port Combo - Non-Design		2	UEP9D		18.01										
		2-Wire VG Loop/2-Wire Voice Grade Port (Centrex)Port Combo - Non-Design		3	UEP9D		23.02										
	UNE Port/Loop Combination Rates (Design)																
		2-Wire VG Loop/2-Wire Voice Grade Port (Centrex) Port Combo - Design		1	UEP9D		18.26										
		2-Wire VG Loop/2-Wire Voice Grade Port (Centrex)Port Combo - Design		2	UEP9D		23.33										
		2-Wire VG Loop/2-Wire Voice Grade Port (Centrex)Port Combo - Design		3	UEP9D		29.98										
	UNE Loop Rate																
		2-Wire Voice Grade Loop (SL 1) - Zone 1		1	UEP9D	UECS1	12.48										
		2-Wire Voice Grade Loop (SL 1) - Zone 2		2	UEP9D	UECS1	16.31										
		2-Wire Voice Grade Loop (SL 1) - Zone 3		3	UEP9D	UECS1	21.32										
		2-Wire Voice Grade Loop (SL 2) - Zone 1		1	UEP9D	UECS2	16.56										
		2-Wire Voice Grade Loop (SL 2) - Zone 2		2	UEP9D	UECS2	21.63										
		2-Wire Voice Grade Loop (SL 2) - Zone 3		3	UEP9D	UECS2	28.28										
	UNE Port Rate																
	ALL STATES																
		2-Wire Voice Grade Port (Centrex) Basic Local Area			UEP9D	UEPYA	1.70	22.14	15.25	8.45	3.91		30.89	7.03			
		2-Wire Voice Grade Port (Centrex 800 termination)Basic Local Area			UEP9D	UEPYB	1.70	22.14	15.25	8.45	3.91		30.89	7.03			
		2-Wire Voice Grade Port (Centrex / EBS-PSET)3Basic Local Area			UEP9D	UEPYC	1.70	22.14	15.25	8.45	3.91		30.89	7.03			
		2-Wire Voice Grade Port (Centrex / EBS-M5009)3Basic Local Area			UEP9D	UEPYD	1.70	22.14	15.25	8.45	3.91		30.89	7.03			
		2-Wire Voice Grade Port (Centrex / EBS-M5209))3 Basic Local Area			UEP9D	UEPYE	1.70	22.14	15.25	8.45	3.91		30.89	7.03			
		2-Wire Voice Grade Port (Centrex / EBS-M5112))3 Basic Local Area			UEP9D	UEPYF	1.70	22.14	15.25	8.45	3.91		30.89	7.03			
		2-Wire Voice Grade Port (Centrex / EBS-M5312))3Basic Local Area			UEP9D	UEPYG	1.70	22.14	15.25	8.45	3.91		30.89	7.03			
		2-Wire Voice Grade Port (Centrex / EBS-M5008))3 Basic Local Area			UEP9D	UEPYT	1.70	22.14	15.25	8.45	3.91		30.89	7.03			
		2-Wire Voice Grade Port (Centrex / EBS-M5208))3 Basic Local Area			UEP9D	UEPYU	1.70	22.14	15.25	8.45	3.91		30.89	7.03			
		2-Wire Voice Grade Port (Centrex / EBS-M5216))3 Basic Local Area			UEP9D	UEPYV	1.70	22.14	15.25	8.45	3.91		30.89	7.03			
		2-Wire Voice Grade Port (Centrex / EBS-M5316))3 Basic Local Area			UEP9D	UEPY3	1.70	22.14	15.25	8.45	3.91		30.89	7.03			
		2-Wire Voice Grade Port (Centrex with Caller ID) Basic Local Area			UEP9D	UEPYH	1.70	22.14	15.25	8.45	3.91		30.89	7.03			
		2-Wire Voice Grade Port (Centrex/Caller ID/Msg Wtg Lamp Indication))3 Basic Local Area			UEP9D	UEPYW	1.70	22.14	15.25	8.45	3.91		30.89	7.03			
		2-Wire Voice Grade Port (Centrex/Msg Wtg Lamp Indication))3 Basic Local Area			UEP9D	UEPYJ	1.70	22.14	15.25	8.45	3.91		30.89	7.03			
		2-Wire Voice Grade Port (Centrex from diff Serving Wire Center) 2 Basic Local Area			UEP9D	UEPYM	1.70	22.14	15.25	8.45	3.91		30.89	7.03			
		2-Wire Voice Grade Port (Centrex/differ SWC /EBS-PSET)2, 3 Basic Local Area			UEP9D	UEPYO	1.70	22.14	15.25	8.45	3.91		30.89	7.03			

UNBUNDLED NETWORK ELEMENTS - Tennessee														Attachment: 2		Exhibit: B	
CATEGORY		RATE ELEMENTS	Interim	Zone	BCS	USOC	RATES ($)					Svc Order Submitted Elec per LSR	Svc Order Submitted Manually per LSR	Incremental Charge - Manual Svc Order vs. Electronic-1st	Incremental Charge - Manual Svc Order vs. Electronic-Add'l	Incremental Charge - Manual Svc Order vs. Electronic-Disc 1st	Incremental Charge - Manual Svc Order vs. Electronic-Disc Add'l
							Rec	Nonrecurring		Nonrecurring Disconnect		OSS Rates($)					
								First	Add'l	First	Add'l	SOMEC	SOMAN	SOMAN	SOMAN	SOMAN	SOMAN
		2-Wire Voice Grade Port (Centrex/differ SWC /EBS-M5009)2, 3 Basic Local Area			UEP9D	UEPYP	1.70	22.14	15.25	8.45	3.91		30.89	7.03			
		2-Wire Voice Grade Port (Centrex/differ SWC /EBS-5209)2, 3 Basic Local Area			UEP9D	UEPYQ	1.70	22.14	15.25	8.45	3.91		30.89	7.03			
		2-Wire Voice Grade Port (Centrex/differ SWC /EBS-M5112)2, 3 Basic Local Area			UEP9D	UEPYR	1.70	22.14	15.25	8.45	3.91		30.89	7.03			
		2-Wire Voice Grade Port (Centrex/differ SWC /EBS-M5312)2, 3 Basic Local Area			UEP9D	UEPYS	1.70	22.14	15.25	8.45	3.91		30.89	7.03			
		2-Wire Voice Grade Port (Centrex/differ SWC /EBS-M5008)2, 3 Basic Local Area			UEP9D	UEPY4	1.70	22.14	15.25	8.45	3.91		30.89	7.03			
		2-Wire Voice Grade Port (Centrex/differ SWC /EBS-M5208)2, 3 Basic Local Area			UEP9D	UEPY5	1.70	22.14	15.25	8.45	3.91		30.89	7.03			
		2-Wire Voice Grade Port (Centrex/differ SWC /EBS-M5216)2, 3 Basic Local Area			UEP9D	UEPY6	1.70	22.14	15.25	8.45	3.91		30.89	7.03			
		2-Wire Voice Grade Port (Centrex/differ SWC /EBS-M5316)2, 3 Basic Local Area			UEP9D	UEPY7	1.70	22.14	15.25	8.45	3.91		30.89	7.03			
		2-Wire Voice Grade Port, Diff Serving Wire Center - 800 Service Term			UEP9D	UEPYZ	1.70	22.14	15.25	8.45	3.91		30.89	7.03			
		2-Wire Voice Grade Port terminated in on Megalink or equivalent Basic Local Area			UEP9D	UEPY9	1.70	22.14	15.25	8.45	3.91		30.89	7.03			
		2-Wire Voice Grade Port Terminated on 800 Service Term Basic Local Area			UEP9D	UEPY2	1.70	22.14	15.25	8.45	3.91		30.89	7.03			
	AL, KY, LA, MS, SC, & TN Only																
		2-Wire Voice Grade Port (Centrex)			UEP9D	UEPQA	1.70	22.14	15.25	8.45	3.91		30.89	7.03			
		2-Wire Voice Grade Port (Centrex 800 termination)			UEP9D	UEPQB	1.70	22.14	15.25	8.45	3.91		30.89	7.03			
		2-Wire Voice Grade Port (Centrex / EBS-PSET)3			UEP9D	UEPQC	1.70	22.14	15.25	8.45	3.91		30.89	7.03			
		2-Wire Voice Grade Port (Centrex / EBS-M5009)3			UEP9D	UEPQD	1.70	22.14	15.25	8.45	3.91		30.89	7.03			
		2-Wire Voice Grade Port (Centrex / EBS-M5209)3			UEP9D	UEPQE	1.70	22.14	15.25	8.45	3.91		30.89	7.03			
		2-Wire Voice Grade Port (Centrex / EBS-M5112)3			UEP9D	UEPQF	1.70	22.14	15.25	8.45	3.91		30.89	7.03			
		2-Wire Voice Grade Port (Centrex / EBS-M5312)3			UEP9D	UEPQG	1.70	22.14	15.25	8.45	3.91		30.89	7.03			
		2-Wire Voice Grade Port (Centrex / EBS-M5008)3			UEP9D	UEPQT	1.70	22.14	15.25	8.45	3.91		30.89	7.03			
		2-Wire Voice Grade Port (Centrex / EBS-M5208)3			UEP9D	UEPQU	1.70	22.14	15.25	8.45	3.91		30.89	7.03			
		2-Wire Voice Grade Port (Centrex / EBS-M5216)3			UEP9D	UEPQV	1.70	22.14	15.25	8.45	3.91		30.89	7.03			
		2-Wire Voice Grade Port (Centrex / EBS-M5316)3			UEP9D	UEPQ3	1.70	22.14	15.25	8.45	3.91		30.89	7.03			
		2-Wire Voice Grade Port (Centrex with Caller ID)			UEP9D	UEPQH	1.70	22.14	15.25	8.45	3.91		30.89	7.03			
		2-Wire Voice Grade Port (Centrex/Caller ID/Msg Wtg Lamp Indication)3			UEP9D	UEPQW	1.70	22.14	15.25	8.45	3.91		30.89	7.03			
		2-Wire Voice Grade Port (Centrex/Msg Wtg Lamp Indication)3			UEP9D	UEPQJ	1.70	22.14	15.25	8.45	3.91		30.89	7.03			
		2-Wire Voice Grade Port (Centrex from diff Serving Wire Center) 2			UEP9D	UEPQM	1.70	22.14	15.25	8.45	3.91		30.89	7.03			
		2-Wire Voice Grade Port (Centrex/differ SWC /EBS-PSET)2, 3			UEP9D	UEPQO	1.70	22.14	15.25	8.45	3.91		30.89	7.03			
		2-Wire Voice Grade Port (Centrex/differ SWC /EBS-M5009)2, 3			UEP9D	UEPQP	1.70	22.14	15.25	8.45	3.91		30.89	7.03			
		2-Wire Voice Grade Port (Centrex/differ SWC /EBS-5209)2, 3			UEP9D	UEPQQ	1.70	22.14	15.25	8.45	3.91		30.89	7.03			
		2-Wire Voice Grade Port (Centrex/differ SWC /EBS-M5112)2, 3			UEP9D	UEPQR	1.70	22.14	15.25	8.45	3.91		30.89	7.03			
		2-Wire Voice Grade Port (Centrex/differ SWC /EBS-M5312)2, 3			UEP9D	UEPQS	1.70	22.14	15.25	8.45	3.91		30.89	7.03			
		2-Wire Voice Grade Port (Centrex/differ SWC /EBS-M5008)2, 3			UEP9D	UEPQ4	1.70	22.14	15.25	8.45	3.91		30.89	7.03			
		2-Wire Voice Grade Port (Centrex/differ SWC /EBS-M5208)2, 3			UEP9D	UEPQ5	1.70	22.14	15.25	8.45	3.91		30.89	7.03			
		2-Wire Voice Grade Port (Centrex/differ SWC /EBS-M5216)2, 3			UEP9D	UEPQ6	1.70	22.14	15.25	8.45	3.91		30.89	7.03			
		2-Wire Voice Grade Port (Centrex/differ SWC /EBS-M5316)2, 3			UEP9D	UEPQ7	1.70	22.14	15.25	8.45	3.91		30.89	7.03			
		2-Wire Voice Grade Port, Diff Serving Wire Center - 800 Service Term			UEP9D	UEPQZ	1.70	22.14	15.25	8.45	3.91		30.89	7.03			

CATEGORY	RATE ELEMENTS	Interim	Zone	BCS	USOC	RATES ($)					Svc Order Submitted Elec per LSR	Svc Order Submitted Manually per LSR	Attachment: 2 Incremental Charge - Manual Svc Order vs. Electronic-1st	Attachment: 2 Incremental Charge - Manual Svc Order vs. Electronic-Add'l	Exhibit: B Incremental Charge - Manual Svc Order vs. Electronic-Disc 1st	Exhibit: B Incremental Charge - Manual Svc Order vs. Electronic-Disc Add'l
						Rec	Nonrecurring		Nonrecurring Disconnect		OSS Rates($)					
							First	Add'l	First	Add'l	SOMEC	SOMAN	SOMAN	SOMAN	SOMAN	SOMAN
	2-Wire Voice Grade Port terminated in on Megalink or equivalent			UEP9D	UEPQ9	1.70	22.14	15.25	8.45	3.91		30.89	7.03			
	2-Wire Voice Grade Port Terminated on 800 Service Term			UEP9D	UEPQ2	1.70	22.14	15.25	8.45	3.91		30.89	7.03			
Local Switching																
	Centrex Intercom Funtionality, per port			UEP9D	URECS	0.6381										
Local Number Portability																
	Local Number Portability (1 per port)			UEP9D	LNPCC	0.35										
Features																
	All Standard Features Offered, per port			UEP9D	UEPVF	0.00						30.89	7.03			
	All Select Features Offered, per port			UEP9D	UEPVS	0.00	433.78					30.89	7.03			
	All Centrex Control Features Offered, per port			UEP9D	UEPVC	0.00						30.89	7.03			
NARS																
	Unbundled Network Access Register - Combination			UEP9D	UARCX	0.00	0.00	0.00				30.89	7.03			
	Unbundled Network Access Register - Inward			UEP9D	UAR1X	0.00	0.00	0.00				30.89	7.03			
	Unbundled Network Access Register - Outdial			UEP9D	UAROX	0.00	0.00	0.00				30.89	7.03			
Miscellaneous Terminations																
2-Wire Trunk Side																
	Trunk Side Terminations, each			UEP9D	CEND6	8.78	22.14	15.25	8.45	3.91		30.89	7.03			
4-Wire Digital (1.544 Megabits)																
	DS1 Circuit Terminations, each			UEP9D	M1HD1	35.55	75.93	38.15				30.89	7.03			
	DS0 Channels Activiated per Channel			UEP9D	M1HDO	0.00	108.67					30.89	7.03			
Interoffice Channel Mileage - 2-Wire																
	Interoffice Channel Facilities Termination			UEP9D	M1GBC	18.58	22.14	15.25	8.45	3.91		30.89	7.03			
	Interoffice Channel mileage, per mile or fraction of mile			UEP9D	M1GBM	0.0174										
Feature Activations (DS0) Centrex Loops on Channelized DS1 Service																
D4 Channel Bank Feature Activations																
	Feature Activation on D-4 Channel Bank Centrex Loop Slot			UEP9D	1PQWS	0.66										
	Feature Activation on D-4 Channel Bank FX line Side Loop Slot			UEP9D	1PQW6	0.66										
	Feature Activation on D-4 Channel Bank FX Trunk Side Loop Slot			UEP9D	1PQW7	0.66										
	Feature Activation on D-4 Channel Bank Centrex Loop Slot - Different Wire Center			UEP9D	1PQWP	0.66										
	Feature Activation on D-4 Channel Bank Private Line Loop Slot			UEP9D	1PQWV	0.66										
	Feature Activation on D-4 Channel Bank Tjie Line/Trunk Loop Slot			UEP9D	1PQWQ	0.66										
	Feature Activation on D-4 Channel Bank WATS Loop Slot			UEP9D	1PQWA	0.66										
Non-Recurring Charges (NRC) Associated with UNE-P Centrex																
	NRC Conversion Currently Combined Switch-As-Is with allowed changes, per port			UEP9D	USAC2		1.03	0.29				30.89	7.03			
	New Centrex Standard Common Block			UEP9D	M1ACS	0.00	658.60					30.89	7.03			
	New Centrex Customized Common Block			UEP9D	M1ACC	0.00	658.60					30.89	7.03			
	NAR Establishment Charge, Per Occasion			UEP9D	URECA		68.57					30.89	7.03			
UNE-P CENTREX - EWSD (Valid in AL, FL, KY, LA, MS & TN)																
2-Wire VG Loop/2-Wire Voice Grade Port (Centrex) Combo																
UNE Port/Loop Combination Rates (Non-Design)																
	2-Wire VG Loop/2-Wire Voice Grade Port (Centrex) Port Combo - Non-Design		1	UEP9E		14.18										
	2-Wire VG Loop/2-Wire Voice Grade Port (Centrex)Port Combo - Non-Design		2	UEP9E		18.01										
	2-Wire VG Loop/2-Wire Voice Grade Port (Centrex)Port Combo - Non-Design		3	UEP9E		23.02										
UNE Port/Loop Combination Rates (Design)																
	2-Wire VG Loop/2-Wire Voice Grade Port (Centrex) Port Combo - Design		1	UEP9E		18.26										
	2-Wire VG Loop/2-Wire Voice Grade Port (Centrex)Port Combo - Design		2	UEP9E		23.33										

CATEGORY	RATE ELEMENTS	Interim	Zone	BCS	USOC	RATES ($) Rec	Nonrecurring First	Nonrecurring Add'l	Nonrecurring Disconnect First	Nonrecurring Disconnect Add'l	Svc Order Submitted Elec per LSR SOMEC	Svc Order Submitted Manually per LSR SOMAN	Attachment: 2 Incremental Charge - Manual Svc Order vs. Electronic-1st SOMAN	Attachment: 2 Incremental Charge - Manual Svc Order vs. Electronic-Add'l SOMAN	Exhibit: B Incremental Charge - Manual Svc Order vs. Electronic-Disc 1st SOMAN	Exhibit: B Incremental Charge - Manual Svc Order vs. Electronic-Disc Add'l SOMAN
							OSS Rates($)									
	2-Wire VG Loop/2-Wire Voice Grade Port (Centrex)Port Combo - Design		3	UEP9E		29.98										
UNE Loop Rate																
	2-Wire Voice Grade Loop (SL 1) - Zone 1		1	UEP9E	UECS1	12.48										
	2-Wire Voice Grade Loop (SL 1) - Zone 2		2	UEP9E	UECS1	16.31										
	2-Wire Voice Grade Loop (SL 1) - Zone 3		3	UEP9E	UECS1	21.32										
	2-Wire Voice Grade Loop (SL 2) - Zone 1		1	UEP9E	UECS2	16.56										
	2-Wire Voice Grade Loop (SL 2) - Zone 2		2	UEP9E	UECS2	21.63										
	2-Wire Voice Grade Loop (SL 2) - Zone 3		3	UEP9E	UECS2	28.28										
UNE Port Rate																
AL, FL, KY, LA, MS, & TN only																
	2-Wire Voice Grade Port (Centrex) Basic Local Area			UEP9E	UEPYA	1.70	22.14	15.25	8.45	3.91		30.89	7.03			
	2-Wire Voice Grade Port (Centrex 800 termination)Basic Local Area			UEP9E	UEPYB	1.70	22.14	15.25	8.45	3.91		30.89	7.03			
	2-Wire Voice Grade Port (Centrex with Caller ID)1Basic Local Area			UEP9E	UEPYH	1.70	22.14	15.25	8.45	3.91		30.89	7.03			
	2-Wire Voice Grade Port (Centrex from diff Serving Wire Center)2 Basic Local Area			UEP9E	UEPYM	1.70	22.14	15.25	8.45	3.91		30.89	7.03			
	2-Wire Voice Grade Port, Diff Serving Wire Center - 800 Service Term - Basic Local Area			UEP9E	UEPYZ	1.70	22.14	15.25	8.45	3.91		30.89	7.03			
	2-Wire Voice Grade Port terminated in on Megalink or equivalent - Basic Local Area			UEP9E	UEPY9	1.70	22.14	15.25	8.45	3.91		30.89	7.03			
	2-Wire Voice Grade Port Terminated on 800 Service Term - Basic Local Area			UEP9E	UEPY2	1.70	22.14	15.25	8.45	3.91		30.89	7.03			
AL, KY, LA, MS, & TN Only																
	2-Wire Voice Grade Port (Centrex)			UEP9E	UEPQA	1.70	22.14	15.25	8.45	3.91		30.89	7.03			
	2-Wire Voice Grade Port (Centrex 800 termination)			UEP9E	UEPQB	1.70	22.14	15.25	8.45	3.91		30.89	7.03			
	2-Wire Voice Grade Port (Centrex with Caller ID)1			UEP9E	UEPQH	1.70	22.14	15.25	8.45	3.91		30.89	7.03			
	2-Wire Voice Grade Port (Centrex from diff Serving Wire Center)2			UEP9E	UEPQM	1.70	22.14	15.25	8.45	3.91		30.89	7.03			
	2-Wire Voice Grade Port, Diff Serving Wire Center - 800 Service Term			UEP9E	UEPQZ	1.70	22.14	15.25	8.45	3.91		30.89	7.03			
	2-Wire Voice Grade Port terminated in on Megalink or equivalent			UEP9E	UEPQ9	1.70	22.14	15.25	8.45	3.91		30.89	7.03			
	2-Wire Voice Grade Port Terminated on 800 Service Term			UEP9E	UEPQ2	1.70	22.14	15.25	8.45	3.91		30.89	7.03			
Local Switching																
	Centrex Intercom Funtionality, per port			UEP9E	URECS	0.6381										
Local Number Portability																
	Local Number Portability (1 per port)			UEP9E	LNPCC	0.35										
Features																
	All Standard Features Offered, per port			UEP9E	UEPVF	0.00						30.89	7.03			
	All Select Features Offered, per port			UEP9E	UEPVS	0.00	433.78					30.89	7.03			
	All Centrex Control Features Offered, per port			UEP9E	UEPVC	0.00						30.89	7.03			
NARS																
	Unbundled Network Access Register - Combination			UEP9E	UARCX	0.00	0.00	0.00				30.89	7.03			
	Unbundled Network Access Register - Indial			UEP9E	UAR1X	0.00	0.00	0.00				30.89	7.03			
	Unbundled Network Access Register - Outdial			UEP9E	UAROX	0.00	0.00	0.00				30.89	7.03			
Miscellaneous Terminations																
2-Wire Trunk Side																
	Trunk Side Terminations, each			UEP9E	CEND6	8.78	22.14	15.25	8.45	3.91		30.89	7.03			
4-Wire Digital (1.544 Megabits)																
	DS1 Circuit Terminations, each			UEP9E	M1HD1	35.55	75.93	38.15				30.89	7.03			
	DS0 Channel Activated Per Channel			UEP9E	M1HDO	0.00	108.67					30.89	7.03			
Interoffice Channel Mileage - 2-Wire																
	Interoffice Channel Facilities Termination			UEP9E	M1GBC	18.58	22.14	15.25	8.45	3.91		30.89	7.03			
	Interoffice Channel mileage, per mile or fraction of mile			UEP9E	M1GBM	0.0174										
Feature Activations (DS0) Centrex Loops on Channelized DS1 Service																
D4 Channel Bank Feature Activations																
	Feature Activation on D-4 Channel Bank Centrex Loop Slot			UEP9E	1PQWS	0.66										

CATEGORY	RATE ELEMENTS	Interim	Zone	BCS	USOC	RATES ($) Rec	Nonrecurring First	Nonrecurring Add'l	Nonrecurring Disconnect First	Nonrecurring Disconnect Add'l	Svc Order Submitted Elec per LSR	Svc Order Submitted Manually per LSR	Attachment: 2 Incremental Charge - Manual Svc Order vs. Electronic-1st	Attachment: 2 Incremental Charge - Manual Svc Order vs. Electronic-Add'l	Exhibit: B Incremental Charge - Manual Svc Order vs. Electronic-Disc 1st	Exhibit: B Incremental Charge - Manual Svc Order vs. Electronic-Disc Add'l
											OSS Rates($)					
											SOMEC	SOMAN	SOMAN	SOMAN	SOMAN	SOMAN
	Feature Activation on D-4 Channel Bank FX line Side Loop Slot			UEP9E	1PQW6	0.66										
	Feature Activation on D-4 Channel Bank FX Trunk Side Loop Slot			UEP9E	1PQW7	0.66										
	Feature Activation on D-4 Channel Bank Centrex Loop Slot - Different Wire Center			UEP9E	1PQWP	0.66										
	Feature Activation on D-4 Channel Bank Private Line Loop Slot			UEP9E	1PQWV	0.66										
	Feature Activation on D-4 Channel Bank Tjie Line/Trunk Loop Slot			UEP9E	1PQWQ	0.66										
	Feature Activation on D-4 Channel Bank WATS Loop Slot			UEP9E	1PQWA	0.66										
Non-Recurring Charges (NRC) Associated with UNE-P Centrex																
	NRC Conversion Currently Combined Switch-As-Is with allowed changes, per port			UEP9E	USAC2		1.03	0.29				30.89	7.03			
	New Centrex Standard Common Block			UEP9E	M1ACS	0.00	658.60					30.89	7.03			
	New Centrex Customized Common Block			UEP9E	M1ACC	0.00	658.60					30.89	7.03			
	NAR Establishment Charge, Per Occasion			UEP9E	URECA	0.00	68.57					30.89	7.03			
UNE-P CENTREX - DCO - Valid in AL, KY, LA, MS, & TN)																
2-Wire VG Loop/2-Wire Voice Grade Port (Centrex) Combo																
UNE Port/Loop Combination Rates (Non-Design)																
	2-Wire VG Loop/2-Wire Voice Grade Port (Centrex) Port Combo - Non-Design		1	UEP93		14.18										
	2-Wire VG Loop/2-Wire Voice Grade Port (Centrex)Port Combo - Non-Design		2	UEP93		18.01										
	2-Wire VG Loop/2-Wire Voice Grade Port (Centrex)Port Combo - Non-Design		3	UEP93		23.02										
UNE Port/Loop Combination Rates (Design)																
	2-Wire VG Loop/2-Wire Voice Grade Port (Centrex) Port Combo - Design		1	UEP93		18.26										
	2-Wire VG Loop/2-Wire Voice Grade Port (Centrex)Port Combo - Design		2	UEP93		23.33										
	2-Wire VG Loop/2-Wire Voice Grade Port (Centrex)Port Combo - Design		3	UEP93		29.98										
UNE Loop Rate																
	2-Wire Voice Grade Loop (SL 1) - Zone 1		1	UEP93	UECS1	12.48										
	2-Wire Voice Grade Loop (SL 1) - Zone 2		2	UEP93	UECS1	16.31										
	2-Wire Voice Grade Loop (SL 1) - Zone 3		3	UEP93	UECS1	21.32										
	2-Wire Voice Grade Loop (SL 2) - Zone 1		1	UEP93	UECS2	16.56										
	2-Wire Voice Grade Loop (SL 2) - Zone 2		2	UEP93	UECS2	21.63										
	2-Wire Voice Grade Loop (SL 2) - Zone 3		3	UEP93	UECS2	28.28										
UNE Port Rate																
AL, KY, LA, MS, & TN only																
	2-Wire Voice Grade Port (Centrex) Basic Local Area			UEP93	UEPYA	1.70	22.14	15.25	8.45	3.91		30.89	7.03			
	2-Wire Voice Grade Port (Centrex 800 termination)Basic Local Area			UEP93	UEPYB	1.70	22.14	15.25	8.45	3.91		30.89	7.03			
	2-Wire Voice Grade Port (Centrex with Caller ID)1Basic Local Area			UEP93	UEPYH	1.70	22.14	15.25	8.45	3.91		30.89	7.03			
	2-Wire Voice Grade Port (Centrex from diff Serving Wire Center)2 Basic Local Area			UEP93	UEPYM	1.70	22.14	15.25	8.45	3.91		30.89	7.03			
	2-Wire Voice Grade Port, Diff Serving Wire Center - 800 Service Term - Basic Local Area			UEP93	UEPYZ	1.70	22.14	15.25	8.45	3.91		30.89	7.03			
	2-Wire Voice Grade Port terminated in on Megalink or equivalent - Basic Local Area			UEP93	UEPY9	1.70	22.14	15.25	8.45	3.91		30.89	7.03			
	2-Wire Voice Grade Port Terminated on 800 Service Term - Basic Local Area			UEP93	UEPY2	1.70	22.14	15.25	8.45	3.91		30.89	7.03			
	2-Wire Voice Grade Port (Centrex)			UEP93	UEPQA	1.70	22.14	15.25	8.45	3.91		30.89	7.03			
	2-Wire Voice Grade Port (Centrex 800 termination)			UEP93	UEPQB	1.70	22.14	15.25	8.45	3.91		30.89	7.03			
	2-Wire Voice Grade Port (Centrex with Caller ID)1			UEP93	UEPQH	1.70	22.14	15.25	8.45	3.91		30.89	7.03			

CATEGORY	RATE ELEMENTS	Interim	Zone	BCS	USOC	RATES ($)					Svc Order Submitted Elec per LSR	Svc Order Submitted Manually per LSR	Incremental Charge - Manual Svc Order vs. Electronic-1st	Incremental Charge - Manual Svc Order vs. Electronic-Add'l	Incremental Charge - Manual Svc Order vs. Electronic-Disc 1st	Incremental Charge - Manual Svc Order vs. Electronic-Disc Add'l
						Rec	Nonrecurring		Nonrecurring Disconnect		OSS Rates($)					
							First	Add'l	First	Add'l	SOMEC	SOMAN	SOMAN	SOMAN	SOMAN	SOMAN
	2-Wire Voice Grade Port (Centrex from diff Serving Wire Center)2			UEP93	UEPQM	1.70	22.14	15.25	8.45	3.91		30.89	7.03			
	2-Wire Voice Grade Port, Diff Serving Wire Center - 800 Service Term			UEP93	UEPQZ	1.70	22.14	15.25	8.45	3.91		30.89	7.03			
	2-Wire Voice Grade Port terminated in on Megalink or equivalent			UEP93	UEPQ9	1.70	22.14	15.25	8.45	3.91		30.89	7.03			
	2-Wire Voice Grade Port Terminated on 800 Service Term			UEP93	UEPQ2	1.70	22.14	15.25	8.45	3.91		30.89	7.03			
Local Switching																
	Centrex Intercom Funtionality, per port			UEP93	URECS	0.6381										
Local Number Portability																
	Local Number Portability (1 per port)			UEP93	LNPCC	0.35										
Features																
	All Standard Features Offered, per port			UEP93	UEPVF	0.00										
	All Centrex Control Features Offered, per port			UEP93	UEPVC	0.00										
NARS																
	Unbundled Network Access Register - Combination			UEP93	UARCX	0.00	0.00	0.00				30.89	7.03			
	Unbundled Network Access Register - Indial			UEP93	UAR1X	0.00	0.00	0.00				30.89	7.03			
	Unbundled Network Access Register - Outdial			UEP93	UAROX	0.00	0.00	0.00				30.89	7.03			
Miscellaneous Terminations																
2-Wire Trunk Side																
	Trunk Side Terminations, each			UEP93	CEND6	8.78	22.14	15.25	8.45	3.91		30.89	7.03			
4-Wire Digital (1.544 Megabits)																
	DS1 Circuit Terminations, each			UEP93	M1HD1	35.55	75.93	38.15				30.89	7.03			
	DS0 Channels Activated, Per Channel			UEP93	M1HDO	0.00	108.67					30.89	7.03			
Interoffice Channel Mileage - 2-Wire																
	Interoffice Channel Facilities Termination			UEP93	M1GBC	18.58	22.14	15.25	8.45	3.91		30.89	7.03			
	Interoffice Channel mileage, per mile or fraction of mile			UEP93	M1GBM	0.0174										
Feature Activations (DS0) Centrex Loops on Channelized DS1 Service																
D4 Channel Bank Feature Activations																
	Feature Activation on D-4 Channel Bank Centrex Loop Slot			UEP93	1PQWS	0.66										
	Feature Activation on D-4 Channel Bank FX Line Side Loop Slot			UEP93	1PQW6	0.66										
	Feature Activation on D-4 Channel Bank FX Trunk Side Loop Slot			UEP93	1PQW7	0.66										
	Feature Activation on D-4 Channel Bank Centrex Loop Slot - Different Wire Center			UEP93	1PQWP	0.66										
	Feature Activation on D-4 Channel Bank Private Line Loop Slot			UEP93	1PQWV	0.66										
	Feature Activation on D-4 Channel Bank Tie Line/Trunk Loop Slot			UEP93	1PQWQ	0.66										
	Feature Activation on D-4 Channel Bank WATS Loop Slot			UEP93	1PQWA	0.66										
Non-Recurring Charges (NRC) Associated with UNE-P Centrex																
	NRC Conversion Currently Combined Switch-As-Is with allowed changes, per port			UEP93	USAC2		1.03	0.29				30.89	7.03			
	New Centrex Standard Common Block			UEP93	M1ACS	0.00	658.60					30.89	7.03			
	New Centrex Customized Common Block			UEP93	M1ACC	0.00	658.60					30.89	7.03			
	NAR Establishment Charge, Per Occasion			UEP93	URECA		68.57					30.89	7.03			
Note 1 - Required Port for Centrex Control in 1AESS, 5ESS & EWSD																
Note 2 - Requres Interoffice Channel Mileage																
Note 3 - Requires Specific Customer Premises Equipment																
UNBUNDLED CENTREX PORT/LOOP COMBINATIONS - MARKET RATES																
1. Market Rates are applied where BellSouth is not required by FCC and/or State Commission rule to provide Unbundled Local Switching or Switch Ports.																
2. Recurring Charges for all Standard Centrex and Centrex Conrol Features are Included in the Market Rate																
3. End Office and Tandem Switching Usage and Common Transport Usage rates in the Port section of this rate exhibit shall apply to all combinations of loop/port network elements except for UNE Coin Port/Loop Combinations.																
4. The first and additional Port nonrecurring charges apply to Not Currently Combined Combos. For Currently Combined Combos, the nonrecurring charges shall be those identified in the Nonrecurring - Currently Combined sections. Additional NRCs may apply also and are categorized accordingly.																
UNE-P CENTREX - 1AESS - (Valid in AL,FL,GA,KY,LA,MS,&TN only)																
2-Wire VG Loop/2-Wire Voice Grade Port (Centrex) Combo																
UNE Port/Loop Combination Rates (Non-Design)																

UNBUNDLED NETWORK ELEMENTS - Tennessee														Attachment: 2		Exhibit: B	
CATEGORY	RATE ELEMENTS	Interim	Zone	BCS	USOC	RATES ($)					Svc Order Submitted Elec per LSR	Svc Order Submitted Manually per LSR	Incremental Charge - Manual Svc Order vs. Electronic-1st	Incremental Charge - Manual Svc Order vs. Electronic-Add'l	Incremental Charge - Manual Svc Order vs. Electronic-Disc 1st	Incremental Charge - Manual Svc Order vs. Electronic-Disc Add'l
						Rec	Nonrecurring		Nonrecurring Disconnect		OSS Rates($)					
							First	Add'l	First	Add'l	SOMEC	SOMAN	SOMAN	SOMAN	SOMAN	SOMAN
	2-Wire VG Loop/2-Wire Voice Grade Port (Centrex) Port Combo - Non-Design		1	UEP91		26.48										
	2-Wire VG Loop/2-Wire Voice Grade Port (Centrex)Port Combo - Non-Design		2	UEP91		30.31										
	2-Wire VG Loop/2-Wire Voice Grade Port (Centrex)Port Combo - Non-Design		3	UEP91		35.32										
UNE Port/Loop Combination Rates (Design)																
	2-Wire VG Loop/2-Wire Voice Grade Port (Centrex) Port Combo - Design		1	UEP91		30.56										
	2-Wire VG Loop/2-Wire Voice Grade Port (Centrex)Port Combo - Design		2	UEP91		35.63										
	2-Wire VG Loop/2-Wire Voice Grade Port (Centrex)Port Combo - Design		3	UEP91		42.28										
UNE Loop Rate																
	2-Wire Voice Grade Loop (SL 1) - Zone 1		1	UEP91	UECS1	12.48										
	2-Wire Voice Grade Loop (SL 1) - Zone 2		2	UEP91	UECS1	16.31										
	2-Wire Voice Grade Loop (SL 1) - Zone 3		3	UEP91	UECS1	21.32										
	2-Wire Voice Grade Loop (SL 2) - Zone 1		1	UEP91	UECS2	16.56										
	2-Wire Voice Grade Loop (SL 2) - Zone 2		2	UEP91	UECS2	21.63										
	2-Wire Voice Grade Loop (SL 2) - Zone 3		3	UEP91	UECS2	28.28										
UNE Ports																
All States (Except North Carolina and Sout Carolina)																
	2-Wire Voice Grade Port (Centrex) Basic Local Area			UEP91	UEPYA	14.00	90.00	45.00	20.00	10.00		30.89	7.03			
	2-Wire Voice Grade Port (Centrex 800 termination)Basic Local Area			UEP91	UEPYB	14.00	90.00	45.00	20.00	10.00		30.89	7.03			
	2-Wire Voice Grade Port (Centrex with Caller ID)1Basic Local Area			UEP91	UEPYH	14.00	90.00	45.00	20.00	10.00		30.89	7.03			
	2-Wire Voice Grade Port (Centrex from diff Serving Wire Center)2 Basic Local Area			UEP91	UEPYM	14.00	90.00	45.00	20.00	10.00		30.89	7.03			
	2-Wire Voice Grade Port, Diff Serving Wire Center - 800 Service Term - Basic Local Area			UEP91	UEPYZ	14.00	90.00	45.00	20.00	10.00		30.89	7.03			
	2-Wire Voice Grade Port terminated in on Megalink or equivalent - Basic Local Area			UEP91	UEPY9	14.00	90.00	45.00	20.00	10.00		30.89	7.03			
	2-Wire Voice Grade Port Terminated on 800 Service Term - Basic Local Area			UEP91	UEPY2	14.00	90.00	45.00	20.00	10.00		30.89	7.03			
AL, KY, LA, MS, & TN Only																
	2-Wire Voice Grade Port (Centrex)			UEP91	UEPQA	14.00	90.00	45.00	20.00	10.00		30.89	7.03			
	2-Wire Voice Grade Port (Centrex 800 termination)			UEP91	UEPQB	14.00	90.00	45.00	20.00	10.00		30.89	7.03			
	2-Wire Voice Grade Port (Centrex with Caller ID)1			UEP91	UEPQH	14.00	90.00	45.00	20.00	10.00		30.89	7.03			
	2-Wire Voice Grade Port (Centrex from diff Serving Wire Center)2			UEP91	UEPQM	14.00	90.00	45.00	20.00	10.00		30.89	7.03			
	2-Wire Voice Grade Port, Diff Serving Wire Center - 800 Service Term			UEP91	UEPQZ	14.00	90.00	45.00	20.00	10.00		30.89	7.03			
	2-Wire Voice Grade Port terminated in on Megalink or equivalent			UEP91	UEPQ9	14.00	90.00	45.00	20.00	10.00		30.89	7.03			
	2-Wire Voice Grade Port Terminated on 800 Service Term			UEP91	UEPQ2	14.00	90.00	45.00	20.00	10.00		30.89	7.03			
Local Switching																
	Centrex Intercom Funtionality, per port			UEP91	URECS	0.6381										
Local Number Portability																
	Local Number Portability (1 per port)			UEP91	LNPCC	0.35										
Features																
	All Standard Features Offered, per port			UEP91	UEPVF	0.00						30.89	7.03			
	All Select Features Offered, per port			UEP91	UEPVS	0.00	433.78					30.89	7.03			
	All Centrex Control Features Offered, per port			UEP91	UEPVC	0.00						30.89	7.03			
NARS																
	Unbundled Network Access Register - Combination			UEP91	UARCX	0.00	0.00	0.00				30.89	7.03			
	Unbundled Network Access Register - Indial			UEP91	UAR1X	0.00	0.00	0.00				30.89	7.03			
	Unbundled Network Access Register - Outdial			UEP91	UAROX	0.00	0.00	0.00				30.89	7.03			
Miscellaneous Terminations																

UNBUNDLED NETWORK ELEMENTS - Tennessee														Attachment: 2		Exhibit: B	
CATEGORY	RATE ELEMENTS	Interim	Zone	BCS	USOC	RATES ($)					Svc Order Submitted Elec per LSR	Svc Order Submitted Manually per LSR	Incremental Charge - Manual Svc Order vs. Electronic-1st	Incremental Charge - Manual Svc Order vs. Electronic-Add'l	Incremental Charge - Manual Svc Order vs. Electronic-Disc 1st	Incremental Charge - Manual Svc Order vs. Electronic-Disc Add'l
						Rec	Nonrecurring		Nonrecurring Disconnect		OSS Rates($)					
							First	Add'l	First	Add'l	SOMEC	SOMAN	SOMAN	SOMAN	SOMAN	SOMAN
2-Wire Trunk Side																
	Trunk Side Terminations, each			UEP91	CENA6	8.78	90.00	45.00	20.00	10.00		30.89	7.03			
Interoffice Channel Mileage - 2-Wire																
	Interoffice Channel Facilities Termination - Voice Grade			UEP91	M1GBC	18.58	90.00	45.00	20.00	10.00		30.89	7.03			
	Interoffice Channel mileage, per mile or fraction of mile			UEP91	M1GBM	0.0174										
Feature Activations (DS0) Centrex Loops on Channelized DS1 Service																
D4 Channel Bank Feature Activations																
	Feature Activation on D-4 Channel Bank Centrex Loop Slot			UEP91	1PQWS	0.66										
	Feature Activation on D-4 Channel Bank FX line Side Loop Slot			UEP91	1PQW6	0.66										
	Feature Activation on D-4 Channel Bank FX Trunk Side Loop Slot			UEP91	1PQW7	0.66										
	Feature Activation on D-4 Channel Bank Centrex Loop Slot - Different Wire Center			UEP91	1PQWP	0.66										
	Feature Activation on D-4 Channel Bank Private Line Loop Slot			UEP91	1PQWV	0.66										
	Feature Activation on D-4 Channel Bank Tjie Line/Trunk Loop Slot			UEP91	1PQWQ	0.66										
	Feature Activation on D-4 Channel Bank WATS Loop Slot			UEP91	1PQWA	0.66										
Non-Recurring Charges (NRC) Associated with UNE-P Centrex																
	Conversion - Currently Combined Switch-As-Is with allowed changes, per port			UEP91	USAC2		1.03	0.29				30.89	7.03			
	New Centrex Standard Common Block			UEP91	M1ACS	0.00	658.60					30.89	7.03			
	New Centrex Customized Common Block			UEP91	M1ACC	0.00	658.60					30.89	7.03			
	Secondary Block, per Block			UEP91	M2CC1	0.00	73.55					30.89	7.03			
	NAR Establishment Charge, Per Occasion			UEP91	URECA		68.57					30.89	7.03			
UNE-P CENTREX - 5ESS (Valid in All States)																
2-Wire VG Loop/2-Wire Voice Grade Port (Centrex) Combo																
UNE Port/Loop Combination Rates (Non-Design)																
	2-Wire VG Loop/2-Wire Voice Grade Port (Centrex) Port Combo - Non-Design		1	UEP95		26.48										
	2-Wire VG Loop/2-Wire Voice Grade Port (Centrex)Port Combo - Non-Design		2	UEP95		30.31										
	2-Wire VG Loop/2-Wire Voice Grade Port (Centrex)Port Combo - Non-Design		3	UEP95		35.32										
UNE Port/Loop Combination Rates (Design)																
	2-Wire VG Loop/2-Wire Voice Grade Port (Centrex) Port Combo - Design		1	UEP95		30.56										
	2-Wire VG Loop/2-Wire Voice Grade Port (Centrex)Port Combo - Design		2	UEP95		35.63										
	2-Wire VG Loop/2-Wire Voice Grade Port (Centrex)Port Combo - Design		3	UEP95		42.28										
UNE Loop Rate																
	2-Wire Voice Grade Loop (SL 1) - Zone 1		1	UEP95	UECS1	12.48										
	2-Wire Voice Grade Loop (SL 1) - Zone 2		2	UEP95	UECS1	16.31										
	2-Wire Voice Grade Loop (SL 1) - Zone 3		3	UEP95	UECS1	21.32										
	2-Wire Voice Grade Loop (SL 2) - Zone 1		1	UEP95	UECS2	16.56										
	2-Wire Voice Grade Loop (SL 2) - Zone 2		2	UEP95	UECS2	21.63										
	2-Wire Voice Grade Loop (SL 2) - Zone 3		3	UEP95	UECS2	28.28										
UNE Port Rate																
All States																
	2-Wire Voice Grade Port (Centrex) Basic Local Area			UEP95	UEPYA	14.00	90.00	45.00	20.00	10.00		30.89	7.03			
	2-Wire Voice Grade Port (Centrex 800 termination)			UEP95	UEPYB	14.00	90.00	45.00	20.00	10.00		30.89	7.03			
	2-Wire Voice Grade Port (Centrex with Caller ID)1Basic Local Area			UEP95	UEPYH	14.00	90.00	45.00	20.00	10.00		30.89	7.03			
	2-Wire Voice Grade Port (Centrex from diff Serving Wire Center)2 Basic Local Area			UEP95	UEPYM	14.00	90.00	45.00	20.00	10.00		30.89	7.03			
	2-Wire Voice Grade Port, Diff Serving Wire Center - 800 Service Term - Basic Local Area			UEP95	UEPYZ	14.00	90.00	45.00	20.00	10.00		30.89	7.03			

UNBUNDLED NETWORK ELEMENTS - Tennessee														Attachment: 2		Exhibit: B	
CATEGORY		RATE ELEMENTS	Interim	Zone	BCS	USOC	RATES ($)					Svc Order Submitted Elec per LSR	Svc Order Submitted Manually per LSR	Incremental Charge - Manual Svc Order vs. Electronic-1st	Incremental Charge - Manual Svc Order vs. Electronic-Add'l	Incremental Charge - Manual Svc Order vs. Electronic-Disc 1st	Incremental Charge - Manual Svc Order vs. Electronic-Disc Add'l
							Rec	Nonrecurring		Nonrecurring Disconnect				OSS Rates($)			
								First	Add'l	First	Add'l	SOMEC	SOMAN	SOMAN	SOMAN	SOMAN	SOMAN
		2-Wire Voice Grade Port terminated in on Megalink or equivalent - Basic Local Area			UEP95	UEPY9	14.00	90.00	45.00	20.00	10.00		30.89	7.03			
		2-Wire Voice Grade Port Terminated on 800 Service Term - Basic Local Area			UEP95	UEPY2	14.00	90.00	45.00	20.00	10.00		30.89	7.03			
	AL, KY, LA, MS, SC, & TN Only																
		2-Wire Voice Grade Port (Centrex)			UEP95	UEPQA	14.00	90.00	45.00	20.00	10.00		30.89	7.03			
		2-Wire Voice Grade Port (Centrex 800 termination)			UEP95	UEPQB	14.00	90.00	45.00	20.00	10.00		30.89	7.03			
		2-Wire Voice Grade Port (Centrex with Caller ID)1			UEP95	UEPQH	14.00	90.00	45.00	20.00	10.00		30.89	7.03			
		2-Wire Voice Grade Port (Centrex from diff Serving Wire Center)2			UEP95	UEPQM	14.00	90.00	45.00	20.00	10.00		30.89	7.03			
		2-Wire Voice Grade Port, Diff Serving Wire Center - 800 Service Term			UEP95	UEPQZ	14.00	90.00	45.00	20.00	10.00		30.89	7.03			
		2-Wire Voice Grade Port terminated in on Megalink or equivalent			UEP95	UEPQ9	14.00	90.00	45.00	20.00	10.00		30.89	7.03			
		2-Wire Voice Grade Port Terminated on 800 Service Term			UEP95	UEPQ2	14.00	90.00	45.00	20.00	10.00		30.89	7.03			
	FL & GA Only																
	Local Switching																
		Centrex Intercom Funtionality, per port			UEP95	URECS	0.6381										
	Local Number Portability																
		Local Number Portability (1 per port)			UEP95	LNPCC	0.35										
	Features																
		All Standard Features Offered, per port			UEP95	UEPVF	0.00						30.89	7.03			
		All Select Features Offered, per port			UEP95	UEPVS	0.00	433.78					30.89	7.03			
		All Centrex Control Features Offered, per port			UEP95	UEPVC	0.00						30.89	7.03			
	NARS																
		Unbundled Network Access Register - Combination			UEP95	UARCX	0.00	0.00	0.00				30.89	7.03			
		Unbundled Network Access Register - Indial			UEP95	UAR1X	0.00	0.00	0.00				30.89	7.03			
		Unbundled Network Access Register - Outdial			UEP95	UAROX	0.00	0.00	0.00				30.89	7.03			
	Miscellaneous Terminations																
	2-Wire Trunk Side																
		Trunk Side Terminations, each			UEP95	CEND6	8.78	47.75	47.01	9.21	8.47		30.89	7.03			
	4-Wire Digital (1.544 Megabits)																
		DS1 Circuit Terminations, each			UEP95	M1HD1	35.55	75.93	38.15				30.89	7.03			
		DS0 Channels Activated, each			UEP95	M1HDO	0.00	108.67					30.89	7.03			
	Interoffice Channel Mileage - 2-Wire																
		Interoffice Channel Facilities Termination			UEP95	M1GBC	18.58	90.00	45.00	20.00	10.00		30.89	7.03			
		Interoffice Channel mileage, per mile or fraction of mile			UEP95	M1GBM	0.0174										
	Feature Activations (DS0) Centrex Loops on Channelized DS1 Service																
	D4 Channel Bank Feature Activations																
		Feature Activation on D-4 Channel Bank Centrex Loop Slot			UEP95	1PQWS	0.66										
		Feature Activation on D-4 Channel Bank FX line Side Loop Slot			UEP95	1PQW6	0.66										
		Feature Activation on D-4 Channel Bank FX Trunk Side Loop Slot			UEP95	1PQW7	0.66										
		Feature Activation on D-4 Channel Bank Centrex Loop Slot - Different Wire Center			UEP95	1PQWP	0.66										
		Feature Activation on D-4 Channel Bank Private Line Loop Slot			UEP95	1PQWV	0.66										
		Feature Activation on D-4 Channel Bank Tjie Line/Trunk Loop Slot			UEP95	1PQWQ	0.66										
		Feature Activation on D-4 Channel Bank WATS Loop Slot			UEP95	1PQWA	0.66										
	Non-Recurring Charges (NRC) Associated with UNE-P Centrex																
		NRC Conversion Currently Combined Switch-As-Is with allowed changes, per port			UEP95	USAC2		1.03	0.29				30.89	7.03			
		New Centrex Standard Common Block			UEP95	M1ACS	0.00	658.60					30.89	7.03			
		New Centrex Customized Common Block			UEP95	M1ACC	0.00	658.60					30.89	7.03			
		NAR Establishment Charge, Per Occasion			UEP95	URECA	0.00	68.57					30.89	7.03			
	UNE-P CENTREX - DMS100 (Valid in All States)																
	2-Wire VG Loop/2-Wire Voice Grade Port (Centrex) Combo																

UNBUNDLED NETWORK ELEMENTS - Tennessee														Attachment: 2		Exhibit: B	
CATEGORY		RATE ELEMENTS	Interim	Zone	BCS	USOC	RATES ($)					Svc Order Submitted Elec per LSR	Svc Order Submitted Manually per LSR	Incremental Charge - Manual Svc Order vs. Electronic-1st	Incremental Charge - Manual Svc Order vs. Electronic-Add'l	Incremental Charge - Manual Svc Order vs. Electronic-Disc 1st	Incremental Charge - Manual Svc Order vs. Electronic-Disc Add'l
							Rec	Nonrecurring		Nonrecurring Disconnect		OSS Rates($)					
								First	Add'l	First	Add'l	SOMEC	SOMAN	SOMAN	SOMAN	SOMAN	SOMAN
	UNE Port/Loop Combination Rates (Non-Design)																
		2-Wire VG Loop/2-Wire Voice Grade Port (Centrex) Port Combo - Non-Design		1	UEP9D		26.48										
		2-Wire VG Loop/2-Wire Voice Grade Port (Centrex)Port Combo - Non-Design		2	UEP9D		30.31										
		2-Wire VG Loop/2-Wire Voice Grade Port (Centrex)Port Combo - Non-Design		3	UEP9D		35.32										
	UNE Port/Loop Combination Rates (Design)																
		2-Wire VG Loop/2-Wire Voice Grade Port (Centrex) Port Combo - Design		1	UEP9D		30.56										
		2-Wire VG Loop/2-Wire Voice Grade Port (Centrex)Port Combo - Design		2	UEP9D		35.63										
		2-Wire VG Loop/2-Wire Voice Grade Port (Centrex)Port Combo - Design		3	UEP9D		42.28										
	UNE Loop Rate																
		2-Wire Voice Grade Loop (SL 1) - Zone 1		1	UEP9D	UECS1	12.48										
		2-Wire Voice Grade Loop (SL 1) - Zone 2		2	UEP9D	UECS1	16.31										
		2-Wire Voice Grade Loop (SL 1) - Zone 3		3	UEP9D	UECS1	21.32										
		2-Wire Voice Grade Loop (SL 2) - Zone 1		1	UEP9D	UECS2	16.56										
		2-Wire Voice Grade Loop (SL 2) - Zone 2		2	UEP9D	UECS2	21.63										
		2-Wire Voice Grade Loop (SL 2) - Zone 3		3	UEP9D	UECS2	28.28										
	UNE Port Rate																
	ALL STATES																
		2-Wire Voice Grade Port (Centrex) Basic Local Area			UEP9D	UEPYA	14.00	90.00	45.00	20.00	10.00		30.89	7.03			
		2-Wire Voice Grade Port (Centrex 800 termination)Basic Local Area			UEP9D	UEPYB	14.00	90.00	45.00	20.00	10.00		30.89	7.03			
		2-Wire Voice Grade Port (Centrex / EBS-PSET)3Basic Local Area			UEP9D	UEPYC	14.00	90.00	45.00	20.00	10.00		30.89	7.03			
		2-Wire Voice Grade Port (Centrex / EBS-M5009)3Basic Local Area			UEP9D	UEPYD	14.00	90.00	45.00	20.00	10.00		30.89	7.03			
		2-Wire Voice Grade Port (Centrex / EBS-M5209))3 Basic Local Area			UEP9D	UEPYE	14.00	90.00	45.00	20.00	10.00		30.89	7.03			
		2-Wire Voice Grade Port (Centrex / EBS-M5112))3 Basic Local Area			UEP9D	UEPYF	14.00	90.00	45.00	20.00	10.00		30.89	7.03			
		2-Wire Voice Grade Port (Centrex / EBS-M5312))3Basic Local Area			UEP9D	UEPYG	14.00	90.00	45.00	20.00	10.00		30.89	7.03			
		2-Wire Voice Grade Port (Centrex / EBS-M5008))3 Basic Local Area			UEP9D	UEPYT	14.00	90.00	45.00	20.00	10.00		30.89	7.03			
		2-Wire Voice Grade Port (Centrex / EBS-M5208))3 Basic Local Area			UEP9D	UEPYU	14.00	90.00	45.00	20.00	10.00		30.89	7.03			
		2-Wire Voice Grade Port (Centrex / EBS-M5216))3 Basic Local Area			UEP9D	UEPYV	14.00	90.00	45.00	20.00	10.00		30.89	7.03			
		2-Wire Voice Grade Port (Centrex / EBS-M5316))3 Basic Local Area			UEP9D	UEPY3	14.00	90.00	45.00	20.00	10.00		30.89	7.03			
		2-Wire Voice Grade Port (Centrex with Caller ID) Basic Local Area			UEP9D	UEPYH	14.00	90.00	45.00	20.00	10.00		30.89	7.03			
		2-Wire Voice Grade Port (Centrex/Caller ID/Msg Wtg Lamp Indication))3 Basic Local Area			UEP9D	UEPYW	14.00	90.00	45.00	20.00	10.00		30.89	7.03			
		2-Wire Voice Grade Port (Centrex/Msg Wtg Lamp Indication))3 Basic Local Area			UEP9D	UEPYJ	14.00	90.00	45.00	20.00	10.00		30.89	7.03			
		2-Wire Voice Grade Port (Centrex from diff Serving Wire Center) 2 Basic Local Area			UEP9D	UEPYM	14.00	90.00	45.00	20.00	10.00		30.89	7.03			
		2-Wire Voice Grade Port (Centrex/differ SWC /EBS-PSET)2, 3 Basic Local Area			UEP9D	UEPYO	14.00	90.00	45.00	20.00	10.00		30.89	7.03			
		2-Wire Voice Grade Port (Centrex/differ SWC /EBS-M5009)2, 3 Basic Local Area			UEP9D	UEPYP	14.00	90.00	45.00	20.00	10.00		30.89	7.03			
		2-Wire Voice Grade Port (Centrex/differ SWC /EBS-5209)2, 3 Basic Local Area			UEP9D	UEPYQ	14.00	90.00	45.00	20.00	10.00		30.89	7.03			

UNBUNDLED NETWORK ELEMENTS - Tennessee														Attachment: 2		Exhibit: B	
CATEGORY		RATE ELEMENTS	Interim	Zone	BCS	USOC	RATES ($)					Svc Order Submitted Elec per LSR	Svc Order Submitted Manually per LSR	Incremental Charge - Manual Svc Order vs. Electronic-1st	Incremental Charge - Manual Svc Order vs. Electronic-Add'l	Incremental Charge - Manual Svc Order vs. Electronic-Disc 1st	Incremental Charge - Manual Svc Order vs. Electronic-Disc Add'l
							Rec	Nonrecurring		Nonrecurring Disconnect		OSS Rates($)					
								First	Add'l	First	Add'l	SOMEC	SOMAN	SOMAN	SOMAN	SOMAN	SOMAN
		2-Wire Voice Grade Port (Centrex/differ SWC /EBS-M5112)2, 3 Basic Local Area			UEP9D	UEPYR	14.00	90.00	45.00	20.00	10.00		30.89	7.03			
		2-Wire Voice Grade Port (Centrex/differ SWC /EBS-M5312)2, 3 Basic Local Area			UEP9D	UEPYS	14.00	90.00	45.00	20.00	10.00		30.89	7.03			
		2-Wire Voice Grade Port (Centrex/differ SWC /EBS-M5008)2, 3 Basic Local Area			UEP9D	UEPY4	14.00	90.00	45.00	20.00	10.00		30.89	7.03			
		2-Wire Voice Grade Port (Centrex/differ SWC /EBS-M5208)2, 3 Basic Local Area			UEP9D	UEPY5	14.00	90.00	45.00	20.00	10.00		30.89	7.03			
		2-Wire Voice Grade Port (Centrex/differ SWC /EBS-M5216)2, 3 Basic Local Area			UEP9D	UEPY6	14.00	90.00	45.00	20.00	10.00		30.89	7.03			
		2-Wire Voice Grade Port (Centrex/differ SWC /EBS-M5316)2, 3 Basic Local Area			UEP9D	UEPY7	14.00	90.00	45.00	20.00	10.00		30.89	7.03			
		2-Wire Voice Grade Port, Diff Serving Wire Center - 800 Service Term			UEP9D	UEPYZ	14.00	90.00	45.00	20.00	10.00		30.89	7.03			
		2-Wire Voice Grade Port terminated in on Megalink or equivalent Basic Local Area			UEP9D	UEPY9	14.00	90.00	45.00	20.00	10.00		30.89	7.03			
		2-Wire Voice Grade Port Terminated on 800 Service Term Basic Local Area			UEP9D	UEPY2	14.00	90.00	45.00	20.00	10.00		30.89	7.03			
	AL, KY, LA, MS, SC, & TN Only																
		2-Wire Voice Grade Port (Centrex)			UEP9D	UEPQA	14.00	90.00	45.00	20.00	10.00		30.89	7.03			
		2-Wire Voice Grade Port (Centrex 800 termination)			UEP9D	UEPQB	14.00	90.00	45.00	20.00	10.00		30.89	7.03			
		2-Wire Voice Grade Port (Centrex / EBS-PSET)3			UEP9D	UEPQC	14.00	90.00	45.00	20.00	10.00		30.89	7.03			
		2-Wire Voice Grade Port (Centrex / EBS-M5009)3			UEP9D	UEPQD	14.00	90.00	45.00	20.00	10.00		30.89	7.03			
		2-Wire Voice Grade Port (Centrex / EBS-M5209)3			UEP9D	UEPQE	14.00	90.00	45.00	20.00	10.00		30.89	7.03			
		2-Wire Voice Grade Port (Centrex / EBS-M5112)3			UEP9D	UEPQF	14.00	90.00	45.00	20.00	10.00		30.89	7.03			
		2-Wire Voice Grade Port (Centrex / EBS-M5312)3			UEP9D	UEPQG	14.00	90.00	45.00	20.00	10.00		30.89	7.03			
		2-Wire Voice Grade Port (Centrex / EBS-M5008)3			UEP9D	UEPQT	14.00	90.00	45.00	20.00	10.00		30.89	7.03			
		2-Wire Voice Grade Port (Centrex / EBS-M5208)3			UEP9D	UEPQU	14.00	90.00	45.00	20.00	10.00		30.89	7.03			
		2-Wire Voice Grade Port (Centrex / EBS-M5216)3			UEP9D	UEPQV	14.00	90.00	45.00	20.00	10.00		30.89	7.03			
		2-Wire Voice Grade Port (Centrex / EBS-M5316)3			UEP9D	UEPQ3	14.00	90.00	45.00	20.00	10.00		30.89	7.03			
		2-Wire Voice Grade Port (Centrex with Caller ID)			UEP9D	UEPQH	14.00	90.00	45.00	20.00	10.00		30.89	7.03			
		2-Wire Voice Grade Port (Centrex/Caller ID/Msg Wtg Lamp Indication)3			UEP9D	UEPQW	14.00	90.00	45.00	20.00	10.00		30.89	7.03			
		2-Wire Voice Grade Port (Centrex/Msg Wtg Lamp Indication)3			UEP9D	UEPQJ	14.00	90.00	45.00	20.00	10.00		30.89	7.03			
		2-Wire Voice Grade Port (Centrex from diff Serving Wire Center) 2			UEP9D	UEPQM	14.00	90.00	45.00	20.00	10.00		30.89	7.03			
		2-Wire Voice Grade Port (Centrex/differ SWC /EBS-PSET)2, 3			UEP9D	UEPQO	14.00	90.00	45.00	20.00	10.00		30.89	7.03			
		2-Wire Voice Grade Port (Centrex/differ SWC /EBS-M5009)2, 3			UEP9D	UEPQP	14.00	90.00	45.00	20.00	10.00		30.89	7.03			
		2-Wire Voice Grade Port (Centrex/differ SWC /EBS-5209)2, 3			UEP9D	UEPQQ	14.00	90.00	45.00	20.00	10.00		30.89	7.03			
		2-Wire Voice Grade Port (Centrex/differ SWC /EBS-M5112)2, 3			UEP9D	UEPQR	14.00	90.00	45.00	20.00	10.00		30.89	7.03			
		2-Wire Voice Grade Port (Centrex/differ SWC /EBS-M5312)2, 3			UEP9D	UEPQS	14.00	90.00	45.00	20.00	10.00		30.89	7.03			
		2-Wire Voice Grade Port (Centrex/differ SWC /EBS-M5008)2, 3			UEP9D	UEPQ4	14.00	90.00	45.00	20.00	10.00		30.89	7.03			
		2-Wire Voice Grade Port (Centrex/differ SWC /EBS-M5208)2, 3			UEP9D	UEPQ5	14.00	90.00	45.00	20.00	10.00		30.89	7.03			
		2-Wire Voice Grade Port (Centrex/differ SWC /EBS-M5216)2, 3			UEP9D	UEPQ6	14.00	90.00	45.00	20.00	10.00		30.89	7.03			
		2-Wire Voice Grade Port (Centrex/differ SWC /EBS-M5316)2, 3			UEP9D	UEPQ7	14.00	90.00	45.00	20.00	10.00		30.89	7.03			
		2-Wire Voice Grade Port, Diff Serving Wire Center - 800 Service Term			UEP9D	UEPQZ	14.00	90.00	45.00	20.00	10.00		30.89	7.03			
		2-Wire Voice Grade Port terminated in on Megalink or equivalent			UEP9D	UEPQ9	14.00	90.00	45.00	20.00	10.00		30.89	7.03			
		2-Wire Voice Grade Port Terminated on 800 Service Term			UEP9D	UEPQ2	14.00	90.00	45.00	20.00	10.00		30.89	7.03			
	Local Switching																
		Centrex Intercom Funtionality, per port			UEP9D	URECS	0.6381										

UNBUNDLED NETWORK ELEMENTS - Tennessee														Attachment: 2		Exhibit: B	
CATEGORY		RATE ELEMENTS	Interim	Zone	BCS	USOC	RATES ($)					Svc Order Submitted Elec per LSR	Svc Order Submitted Manually per LSR	Incremental Charge - Manual Svc Order vs. Electronic-1st	Incremental Charge - Manual Svc Order vs. Electronic-Add'l	Incremental Charge - Manual Svc Order vs. Electronic-Disc 1st	Incremental Charge - Manual Svc Order vs. Electronic-Disc Add'l
							Rec	Nonrecurring		Nonrecurring Disconnect		OSS Rates($)					
								First	Add'l	First	Add'l	SOMEC	SOMAN	SOMAN	SOMAN	SOMAN	SOMAN
	Local Number Portability																
		Local Number Portability (1 per port)			UEP9D	LNPCC	0.35										
	Features																
		All Standard Features Offered, per port			UEP9D	UEPVF	0.00						30.89	7.03			
		All Select Features Offered, per port			UEP9D	UEPVS	0.00	433.78					30.89	7.03			
		All Centrex Control Features Offered, per port			UEP9D	UEPVC	0.00						30.89	7.03			
	NARS																
		Unbundled Network Access Register - Combination			UEP9D	UARCX	0.00	0.00	0.00				30.89	7.03			
		Unbundled Network Access Register - Inward			UEP9D	UAR1X	0.00	0.00	0.00				30.89	7.03			
		Unbundled Network Access Register - Outdial			UEP9D	UAROX	0.00	0.00	0.00				30.89	7.03			
	Miscellaneous Terminations																
	2-Wire Trunk Side																
		Trunk Side Terminations, each			UEP9D	CEND6	8.78	90.00	45.00	20.00	10.00		30.89	7.03			
	4-Wire Digital (1.544 Megabits)																
		DS1 Circuit Terminations, each			UEP9D	M1HD1	35.55	75.93	38.15				30.89	7.03			
		DS0 Channels Activiated per Channel			UEP9D	M1HDO	0.00	108.67					30.89	7.03			
	Interoffice Channel Mileage - 2-Wire																
		Interoffice Channel Facilities Termination			UEP9D	M1GBC	18.58	90.00	45.00	20.00	10.00		30.89	7.03			
		Interoffice Channel mileage, per mile or fraction of mile			UEP9D	M1GBM	0.0174										
	Feature Activations (DS0) Centrex Loops on Channelized DS1 Service																
	D4 Channel Bank Feature Activations																
		Feature Activation on D-4 Channel Bank Centrex Loop Slot			UEP9D	1PQWS	0.66										
		Feature Activation on D-4 Channel Bank FX line Side Loop Slot			UEP9D	1PQW6	0.66										
		Feature Activation on D-4 Channel Bank FX Trunk Side Loop Slot			UEP9D	1PQW7	0.66										
		Feature Activation on D-4 Channel Bank Centrex Loop Slot - Different Wire Center			UEP9D	1PQWP	0.66										
		Feature Activation on D-4 Channel Bank Private Line Loop Slot			UEP9D	1PQWV	0.66										
		Feature Activation on D-4 Channel Bank Tjie Line/Trunk Loop Slot			UEP9D	1PQWQ	0.66										
		Feature Activation on D-4 Channel Bank WATS Loop Slot			UEP9D	1PQWA	0.66										
	Non-Recurring Charges (NRC) Associated with UNE-P Centrex																
		NRC Conversion Currently Combined Switch-As-Is with allowed changes, per port			UEP9D	USAC2		1.03	0.29				30.89	7.03			
		New Centrex Standard Common Block			UEP9D	M1ACS	0.00	658.60					30.89	7.03			
		New Centrex Customized Common Block			UEP9D	M1ACC	0.00	658.60					30.89	7.03			
		NAR Establishment Charge, Per Occasion			UEP9D	URECA		68.57					30.89	7.03			
	UNE-P CENTREX - EWSD (Valid in AL, FL, KY, LA, MS & TN)																
	2-Wire VG Loop/2-Wire Voice Grade Port (Centrex) Combo																
	UNE Port/Loop Combination Rates (Non-Design)																
		2-Wire VG Loop/2-Wire Voice Grade Port (Centrex) Port Combo - Non-Design		1	UEP9E		26.48										
		2-Wire VG Loop/2-Wire Voice Grade Port (Centrex)Port Combo - Non-Design		2	UEP9E		30.31										
		2-Wire VG Loop/2-Wire Voice Grade Port (Centrex)Port Combo - Non-Design		3	UEP9E		35.32										
	UNE Port/Loop Combination Rates (Design)																
		2-Wire VG Loop/2-Wire Voice Grade Port (Centrex) Port Combo - Design		1	UEP9E		30.56										
		2-Wire VG Loop/2-Wire Voice Grade Port (Centrex)Port Combo - Design		2	UEP9E		35.63										
		2-Wire VG Loop/2-Wire Voice Grade Port (Centrex)Port Combo - Design		3	UEP9E		42.28										
	UNE Loop Rate																
		2-Wire Voice Grade Loop (SL 1) - Zone 1		1	UEP9E	UECS1	12.48										
		2-Wire Voice Grade Loop (SL 1) - Zone 2		2	UEP9E	UECS1	16.31										
		2-Wire Voice Grade Loop (SL 1) - Zone 3		3	UEP9E	UECS1	21.32										

UNBUNDLED NETWORK ELEMENTS - Tennessee														Attachment: 2		Exhibit: B	
CATEGORY		RATE ELEMENTS	Interim	Zone	BCS	USOC	RATES ($)					Svc Order Submitted Elec per LSR	Svc Order Submitted Manually per LSR	Incremental Charge - Manual Svc Order vs. Electronic-1st	Incremental Charge - Manual Svc Order vs. Electronic-Add'l	Incremental Charge - Manual Svc Order vs. Electronic-Disc 1st	Incremental Charge - Manual Svc Order vs. Electronic-Disc Add'l
							Rec	Nonrecurring		Nonrecurring Disconnect		OSS Rates($)					
								First	Add'l	First	Add'l	SOMEC	SOMAN	SOMAN	SOMAN	SOMAN	SOMAN
		2-Wire Voice Grade Loop (SL 2) - Zone 1		1	UEP9E	UECS2	16.56										
		2-Wire Voice Grade Loop (SL 2) - Zone 2		2	UEP9E	UECS2	21.63										
		2-Wire Voice Grade Loop (SL 2) - Zone 3		3	UEP9E	UECS2	28.28										
	UNE Port Rate																
	AL, FL, KY, LA, MS, & TN only																
		2-Wire Voice Grade Port (Centrex) Basic Local Area			UEP9E	UEPYA	14.00	90.00	45.00	20.00	10.00		30.89	7.03			
		2-Wire Voice Grade Port (Centrex 800 termination)Basic Local Area			UEP9E	UEPYB	14.00	90.00	45.00	20.00	10.00		30.89	7.03			
		2-Wire Voice Grade Port (Centrex with Caller ID)1Basic Local Area			UEP9E	UEPYH	14.00	90.00	45.00	20.00	10.00		30.89	7.03			
		2-Wire Voice Grade Port (Centrex from diff Serving Wire Center)2 Basic Local Area			UEP9E	UEPYM	14.00	90.00	45.00	20.00	10.00		30.89	7.03			
		2-Wire Voice Grade Port, Diff Serving Wire Center - 800 Service Term - Basic Local Area			UEP9E	UEPYZ	14.00	90.00	45.00	20.00	10.00		30.89	7.03			
		2-Wire Voice Grade Port terminated in on Megalink or equivalent - Basic Local Area			UEP9E	UEPY9	14.00	90.00	45.00	20.00	10.00		30.89	7.03			
		2-Wire Voice Grade Port Terminated on 800 Service Term - Basic Local Area			UEP9E	UEPY2	14.00	90.00	45.00	20.00	10.00		30.89	7.03			
	AL, KY, LA, MS, & TN Only																
		2-Wire Voice Grade Port (Centrex)			UEP9E	UEPQA	14.00	90.00	45.00	20.00	10.00		30.89	7.03			
		2-Wire Voice Grade Port (Centrex 800 termination)			UEP9E	UEPQB	14.00	90.00	45.00	20.00	10.00		30.89	7.03			
		2-Wire Voice Grade Port (Centrex with Caller ID)1			UEP9E	UEPQH	14.00	90.00	45.00	20.00	10.00		30.89	7.03			
		2-Wire Voice Grade Port (Centrex from diff Serving Wire Center)2			UEP9E	UEPQM	14.00	90.00	45.00	20.00	10.00		30.89	7.03			
		2-Wire Voice Grade Port, Diff Serving Wire Center - 800 Service Term			UEP9E	UEPQZ	14.00	90.00	45.00	20.00	10.00		30.89	7.03			
		2-Wire Voice Grade Port terminated in on Megalink or equivalent			UEP9E	UEPQ9	14.00	90.00	45.00	20.00	10.00		30.89	7.03			
		2-Wire Voice Grade Port Terminated on 800 Service Term			UEP9E	UEPQ2	14.00	90.00	45.00	20.00	10.00		30.89	7.03			
	Local Switching																
		Centrex Intercom Funtionality, per port			UEP9E	URECS	0.6381										
	Local Number Portability																
		Local Number Portability (1 per port)			UEP9E	LNPCC	0.35										
	Features																
		All Standard Features Offered, per port			UEP9E	UEPVF	0.00						30.89	7.03			
		All Select Features Offered, per port			UEP9E	UEPVS	0.00	433.78					30.89	7.03			
		All Centrex Control Features Offered, per port			UEP9E	UEPVC	0.00						30.89	7.03			
	NARS																
		Unbundled Network Access Register - Combination			UEP9E	UARCX	0.00	0.00	0.00				30.89	7.03			
		Unbundled Network Access Register - Indial			UEP9E	UAR1X	0.00	0.00	0.00				30.89	7.03			
		Unbundled Network Access Register - Outdial			UEP9E	UAROX	0.00	0.00	0.00				30.89	7.03			
	Miscellaneous Terminations																
	2-Wire Trunk Side																
		Trunk Side Terminations, each			UEP9E	CEND6	8.78	90.00	45.00	20.00	10.00		30.89	7.03			
	4-Wire Digital (1.544 Megabits)																
		DS1 Circuit Terminations, each			UEP9E	M1HD1	35.55	75.93	38.15				30.89	7.03			
		DS0 Channel Activated Per Channel			UEP9E	M1HDO	0.00	108.67					30.89	7.03			
	Interoffice Channel Mileage - 2-Wire																
		Interoffice Channel Facilities Termination			UEP9E	M1GBC	18.58	90.00	45.00	20.00	10.00		30.89	7.03			
		Interoffice Channel mileage, per mile or fraction of mile			UEP9E	M1GBM	0.0174										
	Feature Activations (DS0) Centrex Loops on Channelized DS1 Service																
	D4 Channel Bank Feature Activations																
		Feature Activation on D-4 Channel Bank Centrex Loop Slot			UEP9E	1PQWS	0.66										
		Feature Activation on D-4 Channel Bank FX line Side Loop Slot			UEP9E	1PQW6	0.66										
		Feature Activation on D-4 Channel Bank FX Trunk Side Loop Slot			UEP9E	1PQW7	0.66										
		Feature Activation on D-4 Channel Bank Centrex Loop Slot - Different Wire Center			UEP9E	1PQWP	0.66										

CATEGORY	RATE ELEMENTS	Interim	Zone	BCS	USOC	RATES ($) Rec	Nonrecurring First	Nonrecurring Add'l	Nonrecurring Disconnect First	Nonrecurring Disconnect Add'l	Svc Order Submitted Elec per LSR	Svc Order Submitted Manually per LSR	Attachment: 2 Incremental Charge - Manual Svc Order vs. Electronic-1st	Attachment: 2 Incremental Charge - Manual Svc Order vs. Electronic-Add'l	Exhibit: B Incremental Charge - Manual Svc Order vs. Electronic-Disc 1st	Exhibit: B Incremental Charge - Manual Svc Order vs. Electronic-Disc Add'l
											OSS Rates($)					
							First	Add'l	First	Add'l	SOMEC	SOMAN	SOMAN	SOMAN	SOMAN	SOMAN
	Feature Activation on D-4 Channel Bank Private Line Loop Slot			UEP9E	1PQWV	0.66										
	Feature Activation on D-4 Channel Bank Tjie Line/Trunk Loop Slot			UEP9E	1PQWQ	0.66										
	Feature Activation on D-4 Channel Bank WATS Loop Slot			UEP9E	1PQWA	0.66										
Non-Recurring Charges (NRC) Associated with UNE-P Centrex																
	NRC Conversion Currently Combined Switch-As-Is with allowed changes, per port			UEP9E	USAC2		1.03	0.29				30.89	7.03			
	New Centrex Standard Common Block			UEP9E	M1ACS	0.00	658.60					30.89	7.03			
	New Centrex Customized Common Block			UEP9E	M1ACC	0.00	658.60					30.89	7.03			
	NAR Establishment Charge, Per Occasion			UEP9E	URECA	0.00	68.57					30.89	7.03			
UNE-P CENTREX - DCO - Valid in AL, KY, LA, MS, & TN)																
2-Wire VG Loop/2-Wire Voice Grade Port (Centrex) Combo																
UNE Port/Loop Combination Rates (Non-Design)																
	2-Wire VG Loop/2-Wire Voice Grade Port (Centrex) Port Combo - Non-Design		1	UEP93		26.48										
	2-Wire VG Loop/2-Wire Voice Grade Port (Centrex)Port Combo - Non-Design		2	UEP93		30.31										
	2-Wire VG Loop/2-Wire Voice Grade Port (Centrex)Port Combo - Non-Design		3	UEP93		35.32										
UNE Port/Loop Combination Rates (Design)																
	2-Wire VG Loop/2-Wire Voice Grade Port (Centrex) Port Combo - Design		1	UEP93		30.56										
	2-Wire VG Loop/2-Wire Voice Grade Port (Centrex)Port Combo - Design		2	UEP93		35.63										
	2-Wire VG Loop/2-Wire Voice Grade Port (Centrex)Port Combo - Design		3	UEP93		42.28										
UNE Loop Rate																
	2-Wire Voice Grade Loop (SL 1) - Zone 1		1	UEP93	UECS1	12.48										
	2-Wire Voice Grade Loop (SL 1) - Zone 2		2	UEP93	UECS1	16.31										
	2-Wire Voice Grade Loop (SL 1) - Zone 3		3	UEP93	UECS1	21.32										
	2-Wire Voice Grade Loop (SL 2) - Zone 1		1	UEP93	UECS2	16.56										
	2-Wire Voice Grade Loop (SL 2) - Zone 2		2	UEP93	UECS2	21.63										
	2-Wire Voice Grade Loop (SL 2) - Zone 3		3	UEP93	UECS2	28.28										
UNE Port Rate																
AL, KY, LA, MS, & TN only																
	2-Wire Voice Grade Port (Centrex) Basic Local Area			UEP93	UEPYA	14.00	90.00	45.00	20.00	10.00		30.89	7.03			
	2-Wire Voice Grade Port (Centrex 800 termination)Basic Local Area			UEP93	UEPYB	14.00	90.00	45.00	20.00	10.00		30.89	7.03			
	2-Wire Voice Grade Port (Centrex with Caller ID)1Basic Local Area			UEP93	UEPYH	14.00	90.00	45.00	20.00	10.00		30.89	7.03			
	2-Wire Voice Grade Port (Centrex from diff Serving Wire Center)2 Basic Local Area			UEP93	UEPYM	14.00	90.00	45.00	20.00	10.00		30.89	7.03			
	2-Wire Voice Grade Port, Diff Serving Wire Center - 800 Service Term - Basic Local Area			UEP93	UEPYZ	14.00	90.00	45.00	20.00	10.00		30.89	7.03			
	2-Wire Voice Grade Port terminated in on Megalink or equivalent - Basic Local Area			UEP93	UEPY9	14.00	90.00	45.00	20.00	10.00		30.89	7.03			
	2-Wire Voice Grade Port Terminated on 800 Service Term - Basic Local Area			UEP93	UEPY2	14.00	90.00	45.00	20.00	10.00		30.89	7.03			
	2-Wire Voice Grade Port (Centrex)			UEP93	UEPQA	14.00	90.00	45.00	20.00	10.00		30.89	7.03			
	2-Wire Voice Grade Port (Centrex 800 termination)			UEP93	UEPQB	14.00	90.00	45.00	20.00	10.00		30.89	7.03			
	2-Wire Voice Grade Port (Centrex with Caller ID)1			UEP93	UEPQH	14.00	90.00	45.00	20.00	10.00		30.89	7.03			
	2-Wire Voice Grade Port (Centrex from diff Serving Wire Center)2			UEP93	UEPQM	14.00	90.00	45.00	20.00	10.00		30.89	7.03			
	2-Wire Voice Grade Port, Diff Serving Wire Center - 800 Service Term			UEP93	UEPQZ	14.00	90.00	45.00	20.00	10.00		30.89	7.03			
	2-Wire Voice Grade Port terminated in on Megalink or equivalent			UEP93	UEPQ9	14.00	90.00	45.00	20.00	10.00		30.89	7.03			
	2-Wire Voice Grade Port Terminated on 800 Service Term			UEP93	UEPQ2	14.00	90.00	45.00	20.00	10.00		30.89	7.03			

UNBUNDLED NETWORK ELEMENTS - Tennessee													Attachment: 2		Exhibit: B	
CATEGORY	RATE ELEMENTS	Interim	Zone	BCS	USOC	RATES ($)					Svc Order Submitted Elec per LSR	Svc Order Submitted Manually per LSR	Incremental Charge - Manual Svc Order vs. Electronic-1st	Incremental Charge - Manual Svc Order vs. Electronic-Add'l	Incremental Charge - Manual Svc Order vs. Electronic-Disc 1st	Incremental Charge - Manual Svc Order vs. Electronic-Disc Add'l
						Rec	Nonrecurring		Nonrecurring Disconnect		OSS Rates($)					
							First	Add'l	First	Add'l	SOMEC	SOMAN	SOMAN	SOMAN	SOMAN	SOMAN
Local Switching																
	Centrex Intercom Funtionality, per port			UEP93	URECS	0.6381										
Local Number Portability																
	Local Number Portability (1 per port)			UEP93	LNPCC	0.35										
Features																
	All Standard Features Offered, per port			UEP93	UEPVF	0.00										
	All Centrex Control Features Offered, per port			UEP93	UEPVC	0.00										
NARS																
	Unbundled Network Access Register - Combination			UEP93	UARCX	0.00	0.00	0.00				30.89	7.03			
	Unbundled Network Access Register - Indial			UEP93	UAR1X	0.00	0.00	0.00				30.89	7.03			
	Unbundled Network Access Register - Outdial			UEP93	UAROX	0.00	0.00	0.00				30.89	7.03			
Miscellaneous Terminations																
2-Wire Trunk Side																
	Trunk Side Terminations, each			UEP93	CEND6	8.78	90.00	45.00	20.00	10.00		30.89	7.03			
4-Wire Digital (1.544 Megabits)																
	DS1 Circuit Terminations, each			UEP93	M1HD1	35.55	75.93	38.15				30.89	7.03			
	DS0 Channels Activated, Per Channel			UEP93	M1HDO	0.00	108.67					30.89	7.03			
Interoffice Channel Mileage - 2-Wire																
	Interoffice Channel Facilities Termination			UEP93	M1GBC	18.58	90.00	45.00	20.00	10.00		30.89	7.03			
	Interoffice Channel mileage, per mile or fraction of mile			UEP93	M1GBM	0.0174										
Feature Activations (DS0) Centrex Loops on Channelized DS1 Service																
D4 Channel Bank Feature Activations																
	Feature Activation on D-4 Channel Bank Centrex Loop Slot			UEP93	1PQWS	0.66										
	Feature Activation on D-4 Channel Bank FX Line Side Loop Slot			UEP93	1PQW6	0.66										
	Feature Activation on D-4 Channel Bank FX Trunk Side Loop Slot			UEP93	1PQW7	0.66										
	Feature Activation on D-4 Channel Bank Centrex Loop Slot - Different Wire Center			UEP93	1PQWP	0.66										
	Feature Activation on D-4 Channel Bank Private Line Loop Slot			UEP93	1PQWV	0.66										
	Feature Activation on D-4 Channel Bank Tie Line/Trunk Loop Slot			UEP93	1PQWQ	0.66										
	Feature Activation on D-4 Channel Bank WATS Loop Slot			UEP93	1PQWA	0.66										
Non-Recurring Charges (NRC) Associated with UNE-P Centrex																
	NRC Conversion Currently Combined Switch-As-Is with allowed changes, per port			UEP93	USAC2		1.03	0.29				30.89	7.03			
	New Centrex Standard Common Block			UEP93	M1ACS	0.00	658.60					30.89	7.03			
	New Centrex Customized Common Block			UEP93	M1ACC	0.00	658.60					30.89	7.03			
	NAR Establishment Charge, Per Occasion			UEP93	URECA		68.57					30.89	7.03			
Note 1 - Required Port for Centrex Control in 1AESS, 5ESS & EWSD																
Note 2 - Requres Interoffice Channel Mileage																
Note 3 - Requires Specific Customer Premises Equipment																
Note: Rates displaying an "R" in Interim column are interim and subject to rate true-up as set forth in General Terms and Conditions.																

Attachment 3

Network Interconnection

TABLE OF CONTENTS

1. GENERAL 3

2. DEFINITIONS: (FOR THE PURPOSE OF THIS ATTACHMENT) 3

3. NETWORK INTERCONNECTION 4

4. INTERCONNECTION TRUNK GROUP ARCHITECTURES 6

5. NETWORK DESIGN AND MANAGEMENT FOR INTERCONNECTION 13

6. LOCAL DIALING PARITY 17

7. INTERCONNECTION COMPENSATION 17

8. FRAME RELAY SERVICE INTERCONNECTION 22

9. ORDERING CHARGES 25

Rates	**Exhibit A**
Basic Architecture	**Exhibit B**
One Way Architecture	**Exhibit C**
Two Way Architecture	**Exhibit D**
Supergroup Architecture	**Exhibit E**

NETWORK INTERCONNECTION

1. GENERAL

1.1 The Parties shall provide interconnection with each other's networks for the transmission and routing of telephone exchange service (Local Traffic), ISP-bound Traffic, and exchange access (Switched Access Traffic) on the following terms:

2. DEFINITIONS: (FOR THE PURPOSE OF THIS ATTACHMENT)

2.1 For purposes of this attachment only, the following terms shall have the definitions set forth below:

2.1.1 **Call Termination** has the meaning set forth for "termination" in 47CFR § 51.701(d).

2.1.2 **Call Transport** has the meaning set forth for "transport" in 47 CFR § 51.701(c).

2.1.3 **Call Transport and Termination** is used collectively to mean the switching and transport functions from the Interconnection Point to the last point of switching.

2.1.4 **Common (Shared) Transport** is defined as the transport of the originating Party's traffic by the terminating Party over the terminating Party's common (shared) facilities between (1) the terminating Party's tandem switch and end office switch, (2) between the terminating Party's tandem switches, and/or (3) between the terminating Party's host and remote end office switches. All switches referred herein must be entered into the Local Exchange Routing Guide (LERG).

2.1.5 **Dedicated Interoffice Facility** is defined as a switch transport facility between a Party's Serving Wire Center and the first point of switching within the LATA on the other Party's network.

2.1.6 **End Office Switching** is defined as the function that establishes a communications path between the trunk side and line side of the End Office switch.

2.1.7 **Fiber Meet** is an interconnection arrangement whereby the Parties physically interconnect their networks via an optical fiber interface at which one Party's facilities, provisioning, and maintenance responsibility begins and the other Party's responsibility ends.

2.1.8 **Final Trunk Group** is defined as the trunk group that does not carry overflow traffic.

2.1.9 **Interconnection Point (IP)** is the physical telecommunications equipment interface that interconnects the networks of BellSouth and DPI.

2.1.10 **IntraLATA Toll Traffic** is as defined in Section 7 of this Attachment.

2.1.11 **ISP-bound Traffic** is as defined in Section 7 of this Attachment.

2.1.12 **Local Channel** is defined as a switched transport facility between a Party's Interconnection Point and the IP's Serving Wire Center.

2.1.13 **Local Traffic** is as defined in Section 7 of this Attachment.

2.1.14 **Reciprocal Trunk Group** is defined as a one-way trunk group carrying BellSouth originated traffic to be terminated by DPI

2.1.15 **Serving Wire Center** is defined as the wire center owned by one Party from which the other Party would normally obtain dial tone for its IP.

2.1.16 **Tandem Switching** is defined as the function that establishes a communications path between two switching offices through a third switching office through the provision of trunk side to trunk side switching.

2.1.17 **Transit Traffic** is traffic originating on DPI's network that is switched and/or transported by BellSouth and delivered to a third party's network, or traffic originating on a third party's network that is switched and/or transported by BellSouth and delivered to DPI's network.

3. NETWORK INTERCONNECTION

3.1 This Attachment pertains only to the provision of network interconnection where DPI owns, leases from a third party or otherwise provides its own switch(es).

3.2 Network interconnection may be provided by the Parties at any technically feasible point within BellSouth's network. Requests to BellSouth for interconnection at points other than as set forth in this Attachment may be made through the Bona Fide Request/New Business Request (BFR/NBR) process set out in this Agreement.

3.2.1 Each Party is responsible for providing, engineering and maintaining the network on its side of the IP. The IP must be located within BellSouth's serving territory in the LATA in which traffic is originating. The IP determines the point at which the originating Party shall pay the terminating Party for the Call Transport and Termination of Local Traffic, ISP-bound Traffic and IntraLATA Toll Traffic.

3.2.2 Pursuant to the provisions of this Attachment, the location of the initial IP in a given LATA shall be established by mutual agreement of the Parties. Subject to the requirements for installing additional IPs, as set forth below, any IPs existing prior to the Effective Date of the Agreement will be accepted as initial IPs and will not require re-grooming. When the Parties mutually agree to utilize two-way

interconnection trunk groups for the exchange of Local Traffic, ISP-bound Traffic and IntraLATA Toll Traffic between each other, the Parties shall mutually agree to the location of IP(s). If the Parties are unable to agree to a mutual initial IP, each Party, as originating Party, shall establish a single IP in the LATA for the delivery of its originated Local Traffic, ISP-bound Traffic and IntraLATA Toll Traffic to the other Party for Call Transport and Termination by the terminating Party.

3.2.3 When first establishing the interconnection arrangement in each LATA, the location of the IP shall be established by mutual agreement of the Parties. In selecting the IP, both Parties will act in good faith and select the point that is most efficient for both Parties. If the Parties are unable to agree on the location of the IP, each Party will designate IPs for its originated traffic. Additional IP(s) in a LATA may be established by mutual agreement of the Parties. Notwithstanding the foregoing, additional IP(s) in a particular LATA shall be established, at the request of either Party, when the Local Traffic and ISP-bound Traffic exceeds 8.9 million minutes per month for three consecutive months at the proposed location of the additional IP. BellSouth will not request the establishment of an IP where physical or virtual collocation space is not available or where BellSouth fiber connectivity is not available. When the Parties agree to utilize two-way interconnection trunk groups for the exchange of Local Traffic, ISP-bound Traffic and IntraLATA Toll Traffic the Parties must agree to the location of the IP(s).

3.3 **Interconnection via Dedicated Facilities**

3.3.1 **Local Channel Facilities.** As part of Call Transport and Termination, the originating Party may obtain Local Channel facilities from the terminating Party. The percentage of Local Channel facilities utilized for Local Traffic shall be determined based upon the application of the Percent Local Facility (PLF) Factor on a statewide basis. The charges applied to the percentage of Local Channel facilities used for Local Traffic as determined by the PLF are as set forth in Exhibit A to this Attachment. The remaining percentage of Local Channel facilities shall be billed at BellSouth's applicable access tariff rates.

3.3.2 **Dedicated Interoffice Facilities.** As a part of Call Transport and Termination, the originating Party may obtain Dedicated Interoffice Facilities from the terminating Party. The percentage of Dedicated Interoffice Facilities utilized for Local Traffic shall be determined based upon the application of the Percent Local Facility (PLF) Factor on a statewide basis. The charges applied to the percentage of the Dedicated Interoffice Facilities used for Local Traffic as determined by the PLF are as set forth in Exhibit A to this Attachment. The remaining percentage of the Dedicated Interoffice Facilities shall be billed at BellSouth's applicable access tariff rates.

3.3.3 The facilities purchased pursuant to this Section 3 shall be ordered via the Access Service Request (ASR) process.

3.4 **Fiber Meet**

3.4.1 Notwithstanding Section 3.2.1, 3.2.2, and 3.2.3 above, if DPI elects to establish interconnection with BellSouth pursuant to a Fiber Meet Local Channel, DPI and BellSouth shall jointly engineer, operate and maintain a Synchronous Optical Network (SONET) transmission system by which they shall interconnect their transmission and routing of Local Traffic via a Local Channel at either the DS1 or DS3 level. The Parties shall work jointly to determine the specific transmission system. However, DPI's SONET transmission system must be compatible with BellSouth's equipment, and the Data Communications Channel (DCC) must be turned off.

3.4.2 Each Party, at its own expense, shall procure, install and maintain the agreed upon SONET transmission system in its network.

3.4.3 The Parties shall agree to a Fiber Meet point between the BellSouth Serving Wire Center and the DPI Serving Wire Center. The Parties shall deliver their fiber optic facilities to the Fiber Meet point with sufficient spare length to reach the fusion splice point for the Fiber Meet Point. BellSouth shall, at its own expense, provide and maintain the fusion splice point for the Fiber Meet. A building type Common Language Location Identification (CLLI) code will be established for each Fiber Meet point. All orders for interconnection facilities from the Fiber Meet point shall indicate the Fiber Meet point as the originating point for the facility.

3.4.4 Upon verbal request by DPI, BellSouth shall allow DPI access to the fusion splice point for the Fiber Meet point for maintenance purposes on DPI's side of the Fiber Meet point.

3.4.5 Neither Party shall charge the other for its Local Channel portion of the Fiber Meet facility used exclusively for Local Traffic. All other appropriate charges will apply. DPI shall be billed for a mixed use of the Local Channel using the actual traffic DPI elects to transmit over the facility and the rates from this Agreement and the appropriate tariff(s). Charges for switched and special access services shall be billed in accordance with the applicable access service tariff.

4. INTERCONNECTION TRUNK GROUP ARCHITECTURES

4.1 BellSouth and DPI shall establish interconnecting trunk groups and trunk group configurations between networks, including the use of one-way or two-way trunks in accordance with the following provisions set forth in this Agreement**.** For trunking purposes, traffic will be routed based on the digits dialed by the originating End User and in accordance with the LERG.

4.2 DPI shall establish an interconnection trunk group(s) to at least one BellSouth access tandem within the LATA for the delivery of DPI's originated Local Traffic, ISP-bound Traffic and IntraLATA Toll Traffic and for the receipt and delivery of

Transit Traffic. To the extent DPI desires to deliver Local Traffic, ISP-bound Traffic, IntraLATA Toll Traffic and/or Transit Traffic to BellSouth access tandems within the LATA, other than the tandems(s) to which DPI has established interconnection trunk groups, DPI shall order Multiple Tandem Access, as described in this Attachment, to such other BellSouth access tandems.

4.2.1 Notwithstanding the forgoing, DPI shall establish an interconnection trunk group(s) to all BellSouth access and local tandems in the LATA where DPI has homed (i.e. assigned) its NPA/NXXs. DPI shall home its NPA/NXXs on the BellSouth tandems that serve the exchange rate center areas to which the NPA/NXXs are assigned. The specified exchange rate center assigned to each BellSouth tandem is defined in the LERG. DPI shall enter its NPA/NXX access and/or local tandem homing arrangements into the LERG.

4.3 Switched access traffic will be delivered to and from Interexchange Carriers (IXCs) based on DPI's NXX access tandem homing arrangement as specified by DPI in the LERG.

4.4 Any DPI interconnection request that (1) deviates from the interconnection trunk group architectures as described in this Agreement, (2) affects traffic delivered to DPI from a BellSouth switch, and (3) requires special BellSouth switch translations and other network modifications will require DPI to submit a BFR/NBR via the BFR/NBR Process as set forth in this Agreement.

4.5 Recurring and nonrecurring rates associated with interconnecting trunk groups between BellSouth and DPI are set forth in Exhibit A. To the extent a rate associated with the interconnecting trunk group is not set forth in Exhibit A, the rate shall be as set forth in the appropriate BellSouth tariff for switched access services.

4.6 For two-way trunk groups that carry only both Parties' Local Traffic, the Parties shall be compensated at 50% of the nonrecurring and recurring rates for dedicated trunks and DS1 facilities. DPI shall be responsible for ordering and paying for any two-way trunks carrying Transit Traffic.

4.7 All trunk groups will be provisioned as Signaling System 7 (SS7) capable where technically feasible. If SS7 is not technically feasible multi-frequency (MF) protocol signaling shall be used.

4.8 In cases where DPI is also an IXC, the IXC's Feature Group D (FG D) trunk group(s) must remain separate from the local interconnection trunk group(s).

4.9 Each Party shall order interconnection trunks and trunk group including trunk and trunk group augmentations via the ASR process. A Firm Order Confirmation (FOC) shall be returned to the ordering Party, after receipt of a valid, error free ASR, within the timeframes set forth in each state's applicable Performance

Measures. Notwithstanding the foregoing, blocking situations and projects shall be managed through BellSouth's Carrier Interconnection Switching Center (CISC) Project Management Group and DPI's equivalent trunking group, and FOCs for such orders shall be returned in the timeframes applicable to the project. A project is defined as (1) a new trunk group or (2) a request for more than 96 trunks on a single or multiple group(s) in a given BellSouth local calling area.

4.10 **Interconnection Trunk Groups for Exchange of Local Traffic and Transit Traffic**

Upon mutual agreement of the Parties in a joint planning meeting, the Parties' shall exchange Local Traffic on two-way interconnection trunk group(s) with the quantity of trunks being mutually determined and the provisioning being jointly coordinated. Furthermore, the Parties shall agree upon the IP(s) for two-way interconnection trunk groups transporting both Parties' Local Traffic, ISP-bound Traffic and IntraLATA Toll Traffic. DPI shall order such two-way trunks via the Access Service Request (ASR) process. BellSouth will use the Trunk Group Service Request (TGSR) to request changes in trunking. Furthermore, the Parties shall jointly review trunk performance and forecasts on a periodic basis. The Parties' use of two-way interconnection trunk groups for the transport of Local Traffic, ISP-bound Traffic and IntraLATA Toll Traffic between the Parties does not preclude either Party from establishing additional one-way interconnection trunks for the delivery of its originated Local Traffic, ISP-bound Traffic and IntraLATA Toll Traffic to the other Party.

4.10.1 **BellSouth Access Tandem Interconnection**

BellSouth access tandem interconnection at a single access tandem provides access to those end offices subtending that access tandem (Intratandem Access). Access tandem interconnection is available for any of the following access tandem architectures

4.10.1.1 **Basic Architecture**

In the basic architecture, DPI's originating Local Traffic, ISP-bound Traffic and IntraLATA Toll Traffic and originating and terminating Transit Traffic is transported on a single two-way trunk group between DPI and BellSouth access tandem(s) within a LATA to provide Intratandem Access. This trunk group carries Transit Traffic between DPI and Independent Companies, Interexchange Carriers, other CLECs, CMRS providers that have a Meet Point Billing arrangement with BellSouth, and other network providers with which DPI desires to exchange traffic. This trunk group also carries DPI originated Transit Traffic transiting a single BellSouth access tandem destined to third party tandems such as an Independent Company tandem or other CLEC tandem. BellSouth originated Local Traffic, ISP-bound Traffic and IntraLATA Toll Traffic is transported on a separate single one-way trunk group terminating to DPI. Other trunk groups for operator services, directory assistance, emergency services and intercept must be established pursuant to the applicable BellSouth tariff if service is requested. The

LERG contains current routing and tandem serving arrangements. The basic Architecture is illustrated in Exhibit B.

4.10.1.2 **One-Way Trunk Group Architecture**

In one-way trunk group architecture, the Parties interconnect using three separate trunk groups. A one-way trunk group provides Intratandem Access for DPI-originated Local Traffic, ISP-bound Traffic and IntraLATA Toll Traffic destined for BellSouth End Users. A second one-way trunk group carries BellSouth-originated Local Traffic, ISP-bound Traffic and IntraLATA Toll Traffic destined for DPI End-Users. A two-way trunk group provides Intratandem Access for DPI's originating and terminating Transit Traffic. This trunk group carries Transit Traffic between DPI and Independent Companies, Interexchange Carriers, other CLECs, CMRS providers that have a Meet Point Billing arrangement with BellSouth, and other network providers with which DPI desires to exchange traffic. This trunk group also carries DPI originated Transit Traffic transiting a single BellSouth access tandem destined to third party tandems such as an Independent Company tandem or other CLEC tandem. BellSouth originated Local Traffic, ISP-bound Traffic and IntraLATA Toll Traffic is transported on a separate single one-way trunk group terminating to DPI. Other trunk groups for operator services, directory assistance, emergency services and intercept must be established pursuant to the applicable BellSouth tariff if service is requested. The LERG contains current routing and tandem serving arrangements. The one-way trunk group architecture is illustrated in Exhibit C.

4.10.1.3 **Two-Way Trunk Group Architecture**

The two-way trunk group Architecture establishes one two-way trunk group to provide Intratandem Access for the exchange of Local Traffic, ISP-bound Traffic and IntraLATA Toll Traffic between DPI and BellSouth. In addition, a separate two-way transit trunk group must be established for DPI's originating and terminating Transit Traffic. This trunk group carries Transit Traffic between DPI and Independent Companies, Interexchange Carriers, other CLECs, CMRS providers that have a Meet Point Billing arrangement with BellSouth, and other network providers with which DPI desires to exchange traffic. This trunk group also carries DPI originated Transit Traffic transiting a single BellSouth access tandem destined to third party tandems such as an Independent Company tandem or other CLEC tandem. BellSouth originated traffic may, in order to prevent or remedy traffic blocking situations, be transported on a separate single one-way trunk group terminating to DPI. However, where DPI is responsive in a timely manner to BellSouth's transport needs for its originated traffic, BellSouth originating traffic will be placed on the two-way Local Traffic trunk group carrying ISP-bound Traffic and IntraLATA Toll Traffic. Other trunk groups for operator services, directory assistance, emergency services and intercept must be established pursuant to the applicable BellSouth tariff if service is requested. The LERG contains current routing and tandem serving arrangements. The two-way trunk group architecture is illustrated in Exhibit D.

4.10.1.4 **Supergroup Architecture**

In the supergroup architecture, the Parties' Local Traffic, ISP-bound Traffic and IntraLATA Toll Traffic and DPI's Transit Traffic are exchanged on a single two-way trunk group between DPI and BellSouth to provide Intratandem Access to DPI. This trunk group carries Transit Traffic between DPI and Independent Companies, Interexchange Carriers, other CLECs, CMRS providers that have a Meet Point Billing arrangement with BellSouth, and other network providers with which DPI desires to exchange traffic. This trunk group also carries DPI originated Transit Traffic transiting a single BellSouth access tandem destined to third party tandems such as an Independent Company tandem or other CLEC tandem. BellSouth originated traffic may, in order to prevent or remedy traffic blocking situations, be transported on a separate single one-way trunk group terminating to DPI. However, where DPI is responsive in a timely manner to BellSouth's transport needs for its originated traffic, BellSouth originating traffic will be placed on the Supergroup. Other trunk groups for operator services, directory assistance, emergency services and intercept must be established pursuant to the applicable BellSouth tariff if service is requested. The LERG contains current routing and tandem serving arrangements. The supergroup architecture is illustrated in Exhibit E.

4.10.1.5 **Multiple Tandem Access Interconnection**

4.10.1.5.1 Where DPI does not choose access tandem interconnection at every BellSouth access tandem within a LATA, DPI may utilize BellSouth's multiple tandem access interconnection (MTA). To utilize MTA DPI must establish an interconnection trunk group(s) at a BellSouth access tandem through multiple BellSouth access tandems within the LATA as required. BellSouth will route DPI's originated Local Traffic, ISP-bound Traffic and IntraLATA Toll Traffic for LATA wide transport and termination. DPI must also establish an interconnection trunk group(s) at all BellSouth access tandems where DPI NXXs are homed as described in Section 4.2.1 above. If DPI does not have NXXs homed at any particular BellSouth access tandem within a LATA and elects not to establish an interconnection trunk group(s) at such BellSouth access tandem, DPI can order MTA in each BellSouth access tandem within the LATA where it does have an interconnection trunk group(s) and BellSouth will terminate DPI's Local Traffic, ISP-bound Traffic and IntraLATA Toll Traffic to End-Users served through those BellSouth access tandems where DPI does not have an interconnection trunk group(s). MTA shall be provisioned in accordance with BellSouth's Ordering Guidelines.

4.10.1.5.2 DPI may also utilize MTA to route its originated Transit Traffic; provided, however, that MTA may not be utilized to route switched access traffic that transits the BellSouth network to an Interexchange Carrier (IXC). Switched access traffic originated by or terminated to DPI will be delivered to and from

IXCs based on DPI's NXX access tandem homing arrangement as specified by DPI in the LERG.

4.10.1.5.3 Compensation for MTA shall be at the applicable tandem switching and transport charges specified in Exhibit A to this Attachment and shall be billed in addition to any Call Transport and Termination charges.

4.10.1.5.4 To the extent DPI does not purchase MTA in a LATA served by multiple access tandems, DPI must establish an interconnection trunk group(s) to every access tandem in the LATA to serve the entire LATA. To the extent DPI routes its traffic in such a way that utilizes BellSouth's MTA service without properly ordering MTA, DPI shall pay BellSouth the associated MTA charges.

4.10.2 **Local Tandem Interconnection**

4.10.2.1 Local Tandem Interconnection arrangement allows DPI to establish an interconnection trunk group(s) at BellSouth local tandems for: (1) the delivery of DPI-originated Local Traffic, ISP-bound Traffic and IntraLATA Toll Traffic transported and terminated by BellSouth to BellSouth end offices served by those BellSouth local tandems, and (2) for local Transit Traffic transported by BellSouth for third party network providers who have also established an interconnection trunk group(s) at those BellSouth local tandems.

4.10.2.2 When a specified local calling area is served by more than one BellSouth local tandem, DPI must designate a "home" local tandem for each of its assigned NPA/NXXs and establish trunk connections to such local tandems. Additionally, DPI may choose to establish an interconnection trunk group(s) at the BellSouth local tandems where it has no codes homing but is not required to do so. DPI may deliver Local Traffic, ISP-bound Traffic and IntraLATA Toll Traffic to a "home" BellSouth local tandem that is destined for other BellSouth or third party network provider end offices subtending other BellSouth local tandems in the same local calling area where DPI does not choose to establish an interconnection trunk group(s). It is DPI's responsibility to enter its own NPA/NXX local tandem homing arrangements into the LERG either directly or via a vendor in order for other third party network providers to determine appropriate traffic routing to DPI's codes. Likewise, DPI shall obtain its routing information from the LERG.

4.10.2.3 Notwithstanding establishing an interconnection trunk group(s) to BellSouth's local tandems, DPI must also establish an interconnection trunk group(s) to BellSouth access tandems within the LATA on which DPI has NPA/NXXs homed for the delivery of Interexchange Carrier Switched Access (SWA) and toll traffic, and traffic to Type 2A CMRS connections located at the access tandems. BellSouth shall not switch SWA traffic through more than one BellSouth access tandem. SWA, Type 2A CMRS or toll traffic routed to the local tandem in error will not be backhauled to the BellSouth access tandem for completion. (Type 2A

CMRS interconnection is defined in BellSouth's A35 General Subscriber Services Tariff).

4.10.2.4 BellSouth's provisioning of Local Tandem Interconnection assumes that DPI has executed the necessary local interconnection agreements with the other third party network providers subtending those local tandems as required by the Act.

4.10.3 **Direct End Office-to-End Office Interconnection**

4.10.3.1 Direct End Office-to-End Office one-way or two-way interconnection trunk groups allow for the delivery of a Party's originating Local Traffic, ISP-bound Traffic and IntraLATA Toll Traffic to the terminating Party on a direct end office-to-end office basis.

4.10.3.2 The Parties shall utilize direct end office-to-end office trunk groups under any one of the following conditions:

4.10.3.2.1 Tandem Exhaust - If a tandem through which the Parties are interconnected is unable to, or is forecasted to be unable to support additional traffic loads for any period of time, the Parties will mutually agree on an end office trunking plan that will alleviate the tandem capacity shortage and ensure completion of traffic between DPI and BellSouth.

4.10.3.2.2 Traffic Volume –To the extent either Party has the capability to measure the amount of traffic between DPI's switch and a BellSouth end office and where such traffic exceeds or is forecasted to exceed a single DS1 of traffic per month, then the Parties shall install and retain direct end office trunking sufficient to handle such traffic volumes. Either Party will install additional capacity between such points when overflow traffic exceeds or is forecasted to exceed a single DS1 of traffic per month. In the case of one-way trunking, additional trunking shall only be required by the Party whose trunking has achieved the preceding usage threshold.

4.10.3.2.3 Mutual Agreement - The Parties may install direct end office trunking upon mutual agreement in the absence of conditions (1) or (2) above.

4.10.4 **Transit Traffic Trunk Group**

Transit Traffic trunks can either be two-way trunks or two one-way trunks ordered by DPI to deliver and receive Transit Traffic. Establishing Transit Traffic trunks at BellSouth access and local tandems provides intratandem access to the third parties also interconnected at those tandems.

4.10.4.1 **Toll Free Traffic**

4.10.4.1.1 If DPI chooses BellSouth to perform the Service Switching Point (SSP) Function (i.e., handle Toll Free database queries) from BellSouth's switches, all DPI

originating Toll Free traffic will be routed over the Transit Traffic Trunk Group and shall be delivered using GR-394 format. Carrier Code "0110" and Circuit Code (to be determined for each LATA) shall be used for all such calls.

4.10.4.1.2 DPI may choose to perform its own Toll Free database queries from its switch. In such cases, DPI will determine the nature (local/intraLATA/interLATA) of the Toll Free call (local/IntraLATA/InterLATA) based on the response from the database. If the call is a BellSouth local or intraLATA Toll Free call, DPI will route the post-query local or IntraLATA converted ten-digit local number to BellSouth over the local or intraLATA trunk group. If the call is a third party (ICO, IXC, CMRS or other CLEC) local or intraLATA Toll Free call, DPI will route the post-query local or intraLATA converted ten-digit local number to BellSouth over the Transit Traffic Trunk Group and DPI shall provide to BellSouth a Toll Free billing record when appropriate. If the query reveals the call is an interLATA Toll Free call, DPI will route the post-query interLATA Toll Free call (1) directly from its switch for carriers interconnected with its network or (2) over the Transit Traffic Trunk Group to carriers that are not directly connected to DPI's network but that are connected to BellSouth's access tandem.

4.10.5 All post-query Toll Free calls for which DPI performs the SSP function, if delivered to BellSouth, shall be delivered using GR-394 format for calls destined to IXCs, and GR-317 format for calls destined to end offices that directly subtend a BellSouth access tandem within the LATA.

5. NETWORK DESIGN AND MANAGEMENT FOR INTERCONNECTION

5.1 Network Management and Changes. The Parties will exchange toll-free maintenance contact numbers and escalation procedures. The Parties will provide public notice of network changes in accordance with applicable federal and state rules and regulations.

5.2 Interconnection Technical Standards. The interconnection of all networks will be based upon accepted industry/national guidelines for transmission standards and traffic blocking criteria. Interconnecting facilities shall conform, at a minimum, to the telecommunications industry standard of DS-1 pursuant to Telcordia Standard No. TR-NWT-00499. Where DPI chooses to utilize Signaling System 7 signaling, also known as Common Channel Signaling (SS7), SS7 connectivity is required between the DPI switch and the BellSouth Signaling Transfer Point (STP). BellSouth will provide SS7 signaling using Common Channel Signaling Access Capability in accordance with the technical specifications set forth in the BellSouth Guidelines to Technical Publication, TR-TSV-000905. Facilities of each Party shall provide the necessary on-hook, off-hook answer and disconnect supervision and shall provide calling number ID (Calling Party Number) when technically feasible.

5.3 Quality of Interconnection. The local interconnection for the transmission and routing of telephone exchange service and exchange access that each Party provides to each other will be at least equal in quality to what it provides to itself and any subsidiary or affiliate, where technically feasible, or to any other Party to which each Party provides local interconnection.

5.4 Network Management Controls. Both Parties will work cooperatively to apply sound network management principles by invoking appropriate network management controls (e.g., call gapping) to alleviate or prevent network congestion.

5.5 SS7 Signaling. Both Parties will utilize LEC-to-LEC SS7 Signaling, where available, in conjunction with all traffic in order to enable full interoperability of CLASS features and functions except for call return. All SS7 signaling parameters will be provided, including but not limited to automatic number identification (ANI), originating line information (OLI) calling company category and charge number. All privacy indicators will be honored, and the Parties will exchange Transactional Capabilities Application Part (TCAP) messages to facilitate full interoperability of SS7-based features between the respective networks. Neither Party shall alter the SS7 parameters, or be a party to altering such parameters, or knowingly pass SS7 parameters that have been altered in order to circumvent appropriate interconnection charges.

5.6 Signaling Call Information. BellSouth and DPI will send and receive 10 digits for Local Traffic. Additionally, BellSouth and DPI will exchange the proper call information, i.e. originated call company number and destination call company number, CIC, and OZZ, including all proper translations for routing between networks and any information necessary for billing.

5.7 **Forecasting for Trunk Provisioning**

5.7.1 Within six (6) months after execution of this Agreement, DPI shall provide an initial interconnection trunk group forecast for each LATA in which it plans to provide service within BellSouth's region. Upon receipt of DPI's forecast, the Parties shall conduct a joint planning meeting to develop a joint interconnection trunk group forecast. Each forecast provided under this Section shall be deemed "Confidential Information" under the General Terms and Conditions of this Agreement.

5.7.1.1 At a minimum, the forecast shall include the projected quantity of Transit Trunks, DPI-to-BellSouth one-way trunks (DPI Trunks), BellSouth-to-DPI one-way trunks (Reciprocal Trunk Groups) and/or two-way interconnection trunks, if the Parties have agreed to interconnect using two-way trunking to transport the Parties' Local Traffic and IntraLATA Toll Traffic. The quantities shall be projected for a minimum of six months and shall include an estimate of the current year plus the next two years total forecasted quantities. The Parties shall mutually

develop Reciprocal Trunk Groups and/or two-way interconnection trunk forecast quantities.

5.7.1.2 All forecasts shall include, at a minimum, Access Carrier Terminal Location (ACTL), trunk group type (local/intraLATA toll, Transit, Operator Services, 911, etc.), A location/Z location (CLLI codes for DPI location and BellSouth location where the trunks shall terminate), interface type (e.g., DS1), Direction of Signaling, Trunk Group Number, if known, (commonly referred to as the 2-6 code) and forecasted trunks in service each year (cumulative).

5.7.2 Once initial interconnection trunk forecasts have been developed, DPI shall continue to provide interconnection trunk forecasts on a semiannual basis or at otherwise mutually agreeable intervals. DPI shall use its best efforts to make the forecasts as accurate as possible based on reasonable engineering criteria. The Parties shall continue to develop Reciprocal Trunk Group and/or two-way interconnection trunk forecasts as described in Section 5.7.1.1.

5.7.3 The submitting and development of interconnection trunk forecasts shall not replace the ordering process for local interconnection trunks. Each Party shall exercise its best efforts to provide the quantity of interconnection trunks mutually forecasted. However, the provision of the forecasted quantity of interconnection trunks is subject to trunk terminations and facility capacity existing at the time the trunk order is submitted. Furthermore, the receipt and development of trunk forecasts does not imply any liability for failure to perform if capacity (trunk terminations or facilities) is not available for use at the forecasted time.

5.8 **Trunk Utilization**

5.8.1 For the Reciprocal Trunk Groups that are Final Trunk Groups (Reciprocal Final Trunk Groups), BellSouth and DPI shall monitor traffic on each interconnection Reciprocal Final Trunk Group that is ordered and installed. The Parties agree that the Reciprocal Final Trunk Groups will be utilized at 60 percent (60%) of the time consistent busy hour utilization level within 90 days of installation. The Parties agree that the Reciprocal Final Trunk Groups will be utilized at eighty percent (80%) of the time consistent busy hour utilization level within 180 days of installation. Any Reciprocal Final Trunk Group not meeting the minimum thresholds set forth in this Section are defined as “Under-utilized” trunks. BellSouth may disconnect any Under-utilized Reciprocal Final Trunk Groups and DPI shall refund to BellSouth the associated nonrecurring and recurring trunk and facility charges paid by BellSouth, if any.

5.8.1.1 BellSouth’s CISC will notify DPI of any under-utilized Reciprocal Trunk Groups and the number of such trunk groups that BellSouth wishes to disconnect. BellSouth will provide supporting information either by email or facsimile to the designated DPI interface. DPI will provide concurrence with the disconnection in seven (7) business days or will provide specific information supporting why the

trunks should not be disconnected. Such supporting information should include expected traffic volumes (including traffic volumes generated due to Local Number Portability) and the timeframes within which DPI expects to need such trunks. BellSouth's CISC Project Manager and Circuit Capacity Manager will discuss the information with DPI to determine if agreement can be reached on the number of Reciprocal Final Trunk Groups to be removed. If no agreement can be reached, BellSouth will issue disconnect orders to DPI. The due date of these orders will be four weeks after DPI was first notified in writing of the underutilization of the trunk groups.

5.8.2 To the extent that any interconnection trunk group is utilized at a time-consistent busy hour of eighty percent (80%) or greater, the Parties may review the trunk groups and, if necessary, shall negotiate in good faith for the installation of augmented facilities.

5.8.3 For the two-way trunk groups, BellSouth and DPI shall monitor traffic on each interconnection trunk group that is ordered and installed. The Parties agree that within 90 days of the installation of the BellSouth two-way trunk or trunks, the trunks will be utilized at 60 percent (60%) of the time consistent busy hour utilization level. The Parties agree that within 180 days of the installation of a trunk or trunks, the trunks will be utilized at eighty percent (80%) of the time consistent busy hour utilization level. Any trunk or trunks not meeting the minimum thresholds set forth in this Section are defined as "Under-utilized" trunks. BellSouth will request the disconnection of any Under-utilized two-way trunk(s) and DPI shall refund to BellSouth the associated nonrecurring and recurring trunk and facility charges paid by BellSouth, if any.

5.8.3.1 BellSouth's LISC will notify DPI of any under-utilized two-way trunk groups and the number of trunks that BellSouth wishes to disconnect. BellSouth will provide supporting information either by email or facsimile to the designated DPI interface. DPI will provide concurrence with the disconnection in seven (7) business days or will provide specific information supporting why the two-way trunks should not be disconnected. Such supporting information should include expected traffic volumes (including traffic volumes generated due to Local Number Portability) and the timeframes within which DPI expects to need such trunks. BellSouth's CISC Project Manager and Circuit Capacity Manager will discuss the information with DPI to determine if agreement can be reached on the number of trunks to be removed. If no agreement can be reached, DPI will issue disconnect orders to BellSouth. The due date of these orders will be four weeks after DPI was first notified in writing of the underutilization of the trunk groups.

5.8.3.2 To the extent that any interconnection trunk group is utilized at a time-consistent busy hour of eighty percent (80%) or greater, the Parties may review the trunk groups and, if necessary, shall negotiate in good faith for the installation of augmented facilities.

6. LOCAL DIALING PARITY

6.1 BellSouth and DPI shall provide local and toll dialing parity, as defined in FCC rules and regulations, with no unreasonable dialing delays. Dialing parity shall be provided for all originating telecommunications services that require dialing to route a call.

7. INTERCONNECTION COMPENSATION

7.1 Compensation for Call Transportation and Termination for Local Traffic, ISP-bound Traffic and IntraLATA Toll Traffic

7.1.1 For the purposes of this Attachment and for reciprocal compensation between the Parties pursuant to this Attachment, Local Traffic is defined as any telephone call that originates in one exchange and terminates in either the same exchange, or other local calling area associated with the originating exchange as defined and specified in Section A3 of BellSouth's General Subscriber Service Tariff.

7.1.1.1 Additionally, Local Traffic includes any cross boundary, voice-to-voice intrastate, interLATA or interstate, interLATA calls established as a local call by the ruling regulatory body.

7.1.2 ISP-bound Traffic is defined as calls to an information service provider or Internet service provider (ISP) that are dialed by using a local dialing pattern (7 or 10 digits) by a calling party in one exchange to an ISP server or modem in either the same exchange or a corresponding Extended Area Service (EAS) exchange as defined and specified in Section A3 of BellSouth's General Subscriber Service tariff. ISP-bound Traffic is not Local Traffic subject to reciprocal compensation, but instead is information access traffic subject to the FCC's jurisdiction.

7.1.3 Notwithstanding the definitions of Local Traffic and ISP-bound traffic above, and pursuant to the FCC's Order on Remand and Report and Order in CC Docket 99-68 released April 27, 2001 (ISP Order on Remand), BellSouth and DPI agree to the rebuttable presumption that all combined circuit switched Local and ISP-bound Traffic delivered to BellSouth or DPI that exceeds a 3:1 ratio of terminating to originating traffic on a statewide basis shall be considered ISP-bound traffic for compensation purposes. BellSouth and DPI further agree to the rebuttable presumption that all combined circuit switched Local and ISP-bound Traffic delivered to BellSouth or DPI that does not exceed a 3:1 ratio of terminating to originating traffic on a statewide basis shall be considered Local Traffic for compensation purposes.

7.1.4 Neither Party shall pay compensation to the other Party for per minute of use rate elements associated with the Call Transport and Termination of Local Traffic or ISP-bound Traffic.

7.1.5 The appropriate elemental rates set forth in Exhibit A of this Attachment shall apply for Transit Traffic as described in Sections 7.6 and 7.6.1 below and to Multiple Tandem Access as described in Section 4.10.1.5 above.

7.1.6 Neither Party shall represent Switched Access Traffic as Local Traffic or ISP-bound Traffic for purposes of determining compensation for the call.

7.1.7 IntraLATA Toll Traffic is defined as all traffic that originates and terminates within a single LATA that is not Local or ISP-bound traffic under this Attachment.

7.1.7.1 For terminating its intraLATA toll traffic on the other company's network, the originating Party will pay the terminating Party BellSouth's current intrastate or interstate, whichever is appropriate, terminating switched access tariff rates as set forth in BellSouth's Access Services Tariffs as filed and in effect with the FCC or Commission. The appropriate charges will be determined by the routing of the call. Additionally, if one Party is the other Party's End User's presubscribed interexchange carrier or if one Party's End User uses the other Party as an interexchange carrier on a 101XXXX basis, the originating party will charge the other Party the appropriate BellSouth originating switched access tariff rates as set forth in BellSouth's Intrastate or Interstate Access Services Tariff as filed and in effect with the FCC or appropriate Commission.

7.1.8 If DPI assigns NPA/NXXs to specific BellSouth rate centers within the LATA and assigns numbers from those NPA/NXXs to DPI End Users physically located outside of that LATA, BellSouth traffic originating from within the LATA where the NPA/NXXs are assigned and delivered to a DPI customer physically located outside of such LATA, shall not be deemed Local Traffic. Further, DPI agrees to identify such interLATA traffic to BellSouth and to compensate BellSouth for originating and transporting such interLATA traffic to DPI at BellSouth's switched access tariff rates.

7.2 If DPI does not identify such interLATA traffic to BellSouth, to the best of BellSouth's ability BellSouth will determine which whole DPI NPA/NXXs on which to charge the applicable rates for originating network access service as reflected in BellSouth's Access Service Tariff. BellSouth shall make appropriate billing adjustments if DPI can provide sufficient information for BellSouth to determine whether or not said traffic is Local or ISP-bound Traffic.

7.3 **Jurisdictional Reporting**

7.3.1 **Percent Local Use**. Each Party shall report to the other a Percent Local Usage (PLU) factor. The application of the PLU will determine the amount of local or ISP-bound minutes to be billed to the other Party. Each Party shall update its PLU on the first of January, April, July and October of the year and shall send it to the other Party to be received no later than 30 days after the first of each such month based on local and ISP-bound usage for the past three months ending the last day

of December, March, June and September, respectively. Requirements associated with PLU calculation and reporting shall be as set forth in BellSouth's Jurisdictional Factors Reporting Guide, as it is amended from time to time.

7.3.2 **Percent Local Facility**. Each Party shall report to the other a Percent Local Facility (PLF) factor. The application of the PLF will determine the portion of switched dedicated transport to be billed per the local jurisdiction rates. The PLF shall be applied to Multiplexing, Local Channel and Interoffice Channel Switched Dedicated Transport utilized in the provision of local interconnection trunks. Each Party shall update its PLF on the first of January, April, July and October of the year and shall send it to the other Party to be received no later than 30 days after the first of each such month to be effective the first bill period the following month, respectively. Requirements associated with PLU and PLF calculation and reporting shall be as set forth in BellSouth's Jurisdictional Factors Reporting Guide, as it is amended from time to time.

7.3.3 **Percent Interstate Usage**. Each Party shall report to the other the projected Percent Interstate Usage (PIU) factor. All jurisdictional report requirements, rules and regulations for Interexchange Carriers specified in BellSouth's Intrastate Access Services Tariff will apply to DPI. After interstate and intrastate traffic percentages have been determined by use of PIU procedures, the PLU and PLF factors will be used for application and billing of local interconnection. Each Party shall update its PIUs on the first of January, April, July and October of the year and shall send it to the other Party to be received no later than 30 days after the first of each such month, for all services showing the percentages of use for the past three months ending the last day of December, March, June and September.

7.3.4 Notwithstanding the provisions in Section 7.3.1, 7.3.2, and 7.3.3 above, where the terminating Party has message recording technology that identifies the jurisdiction of traffic terminated as defined in this Agreement, such information shall, at the terminating Party's option, be utilized to determine the appropriate jurisdictional reporting factors (PLU, PIU, and/or PLF), in lieu of those provided by the originating Party. In the event that the terminating Party opts to utilize its own data to determine jurisdictional reporting factors, such terminating Party shall notify the originating Party at least 15 days prior to the beginning of the calendar quarter in which the terminating Party will begin to utilize its own data. Such factors shall subject to the Dispute Resolution provisions in this Agreement, as well as the Audit provisions set forth in 7.3.5 below.

7.3.5 **Audits.** On thirty (30) days written notice, each Party must provide the other the ability and opportunity to conduct an annual audit to ensure the proper billing of traffic. BellSouth and DPI shall retain records of call detail for a minimum of nine months from which the PLU, PLF and/or PIU can be ascertained. The audit shall be conducted during normal business hours at an office designated by the Party being audited. Audit requests shall not be submitted more frequently than one (1)

time per calendar year. Audits shall be performed by a mutually acceptable independent auditor paid for by the Party requesting the audit. The PLF, PLU and/or PIU shall be adjusted based upon the audit results and shall apply for the quarter the audit was completed, for the quarter prior to the completion of the audit, and for the two quarters following the completion of the audit. If, as a result of an audit, either Party is found to have overstated the PLF, PLU and/or PIU by twenty percentage points (20%) or more, that Party shall reimburse the auditing Party for the cost of the audit.

7.4 **Compensation for 8XX Traffic**

7.4.1 Compensation for 8XX Traffic. Each Party shall pay the other the appropriate switched access charges set forth in the BellSouth intrastate or interstate switched access tariffs. DPI will pay BellSouth the database query charge as set forth in the BellSouth intrastate or interstate switched access tariffs as applicable.

7.4.2 Records for 8XX Billing. Each Party will provide to the other the appropriate records necessary for billing intraLATA 8XX customers. The records provided will be in a standard EMI format.

7.4.3 8XX Access Screening. BellSouth's provision of 8XX Toll Free Dialing (TFD) to DPI requires interconnection from DPI to BellSouth's 8XX Signal Channel Point (SCP). Such interconnections shall be established pursuant to BellSouth's Common Channel Signaling Interconnection Guidelines and Telcordia's CCS Network Interface Specification document, TR-TSV-000905. DPI shall establish SS7 interconnection at the BellSouth Local Signal Transfer Points serving the BellSouth 8XX SCPs that DPI desires to query. The terms and conditions for 8XX TFD are set out in BellSouth's Intrastate Access Services Tariff.

7.5 **Mutual Provision of Switched Access Service**

7.5.1 Switched Access Traffic. Switched Access Traffic is described as telephone calls requiring local transmission or switching services for the purpose of the origination or termination of Telephone Toll Service. Switched Access Traffic includes, but is not limited to, the following types of traffic: Feature Group A, Feature Group B, Feature Group C, Feature Group D, toll free access (e.g., 8XX), 900 access and their successors. Additionally, any Public Switched Telephone Network interexchange telecommunications traffic, regardless of transport protocol method, where the originating and terminating points, end-to-end points, are in different LATAs, or are in the same LATA and the Parties' Switched Access services are used for the origination or termination of the call, shall be considered Switched Access Traffic. Irrespective of transport protocol method used, a call which originates in one LATA and terminates in another LATA (i.e., the end-to-end points of the call) or in which the Parties' Switched Access Services are used for the origination or termination of the call, shall not be considered Local Traffic or ISP-bound Traffic.

7.5.2 If the BellSouth End User chooses DPI as their presubscribed interexchange carrier, or if the BellSouth End User uses DPI as an interexchange carrier on a 101XXXX basis, BellSouth will charge DPI the appropriate BellSouth tariff charges for originating switched access services.

7.5.3 Where the originating Party delivers a call to the terminating Party over switched access facilities, the originating Party will pay the terminating Party terminating, switched access charges as set forth in BellSouth's Intrastate or Interstate Access Services Tariff, as appropriate.

7.5.4 When DPI's end office switch provides an access service connection to or from an interexchange carrier (IXC) by a direct trunk group to the IXC utilizing BellSouth facilities, each Party will provide its own access services to the IXC and bill on a multi-bill, multi-tariff meet-point basis. Each Party will bill its own access services rates to the IXC with the exception of the interconnection charge. The interconnection charge will be billed by DPI as the Party providing the end office function. Each party will use the Multiple Exchange Carrier Access Billing (MECAB) guidelines to establish meet point billing for all applicable traffic. The Parties shall utilize a thirty (30) day billing period.

7.5.4.1 When DPI's end office subtends the BellSouth Access Tandem switch for receipt or delivery of switched access traffic and provides an access service connection to or from an IXC via BellSouth's Access Tandem switch, BellSouth, as the tandem company agrees to provide to DPI, as the End Office Company, as defined in MECAB, at no charge, all the switched access detail usage data, recorded at the access tandem, within no more than sixty (60) days after the recording date. Each Party will notify the other when it is not feasible to meet these requirements. As business requirements change, data reporting requirements may be modified as necessary.

7.5.5 BellSouth, as the tandem provider company, will retain for a minimum period of sixty (60) days, access message detail sufficient to recreate any data that is lost or damaged by the tandem provider company or any third party involved in processing or transporting data.

7.5.6 BellSouth, as the tandem provider company, agrees to recreate the lost or damaged data within forty-eight (48) hours of notification by the other or by an authorized third party handling the data.

7.5.7 Any claims against BellSouth, as the tandem provider company, for unbillable or uncollectible revenue should be filed with the tandem provider company within 120 days of the usage date.

7.5.8 BellSouth, as the tandem provider company shall keep records of its billing activities relating to jointly-provided Intrastate and Interstate access services in sufficient detail to permit the Subsequent Billing Party to, by formal or informal

review or audit, to verify the accuracy and reasonableness of the jointly-provided access billing data provided by the Initial Billing Party. Each Party agrees to cooperate in such formal or informal reviews or audits and further agrees to jointly review the findings of such reviews or audits in order to resolve any differences concerning the findings thereof.

7.5.9 DPI agrees not to deliver switched access traffic to BellSouth for termination except over DPI ordered switched access trunks and facilities.

7.6 **Transit Traffic**

7.6.1 BellSouth shall provide tandem switching and transport services for DPI's Transit Traffic. Rates for local Transit Traffic and ISP-bound Transit Traffic shall be the applicable Call Transport and Termination charges as set forth in Exhibit A to this Attachment. Rates for Switched Access Transit Traffic shall be the applicable charges as set forth in BellSouth Interstate or Intrastate Switched Access tariffs. Billing associated with all Transit Traffic shall be pursuant to MECAB guidelines. Traffic between DPI and Wireless Type 1 third parties shall not be treated as Transit Traffic from a routing or billing perspective. Traffic between DPI and Wireless Type 2A or a third party CLEC utilizing BellSouth switching shall not be treated as Transit Traffic from a routing or billing perspective until BellSouth and the Wireless carrier or a third party CLEC utilizing BellSouth switching have the capability to properly meet-point-bill in accordance with MECAB guidelines.

7.6.2 The delivery of traffic that transits the BellSouth network and is transported to another carrier's network is excluded from any BellSouth billing guarantees. BellSouth agrees to deliver Transit Traffic to the terminating carrier; provided, however, that DPI is solely responsible for negotiating and executing any appropriate contractual agreements with the terminating carrier for the exchange of Transit Traffic through the BellSouth network. BellSouth will not be liable for any compensation to the terminating carrier or to DPI. In the event that the terminating third party carrier imposes on BellSouth any charges or costs for the delivery of Transit Traffic, DPI shall reimburse BellSouth for such costs. Additionally, the Parties agree that any billing to a third party or other telecommunications carrier under this section shall be pursuant to MECAB procedures.

8. FRAME RELAY SERVICE INTERCONNECTION

8.1 In addition to the Local Interconnection services set forth above, BellSouth will offer a network to network Interconnection arrangement between BellSouth's and DPI's frame relay switches as set forth below. The following provisions will apply only to Frame Relay Service and Exchange Access Frame Relay Service and Managed Shared Frame Relay Service in those states in which DPI is certified and providing Frame Relay Service as a Local Exchange Carrier and where traffic is

being exchanged between DPI and BellSouth Frame Relay Switches in the same LATA.

8.2 The Parties agree to establish two-way Frame Relay facilities between their respective Frame Relay Switches to the mutually agreed upon Frame Relay Service point(s) of interconnection (IP(s)) within the LATA. All IPs shall be within the same Frame Relay Network Serving Areas as defined in Section A40 of BellSouth's General Subscriber Service Tariff except as set forth in this Attachment.

8.3 Upon the request of either Party, such interconnection will be established where BellSouth and DPI have Frame Relay Switches in the same LATA. Where there are multiple Frame Relay switches in one central office, an interconnection with any one of the switches will be considered an interconnection with all of the switches at that central office for purposes of routing packet traffic.

8.4 The Parties agree to provision local and intraLATA Frame Relay Service and Exchange Access Frame Relay Service and Managed Shared Frame Relay Service (both intrastate and interstate) over Frame Relay interconnection facilities between the respective Frame Relay switches and the IPs.

8.5 The Parties agree to assess each other reciprocal charges for the facilities that each provides to the other according to the Percent Local Circuit Use Factor (PLCU), determined as follows:

8.5.1 If the data packets originate and terminate in locations in the same LATA, and are consistent with the local definitions of the Agreement, the traffic is considered local. Frame Relay framed packet data is transported within Virtual Circuits (VC). For the purposes of this Agreement, if all the data packets transported within a VC remain within the LATA, then consistent with the local definitions in this Agreement, the traffic on that VC is local (Local VC).

8.5.2 If the originating and terminating locations of the two-way packet data traffic are not in the same LATA, the traffic on that VC is interLATA (InterLATA VC).

8.5.3 The PLCU is determined by dividing the total number of Local VCs, by the total number of VCs on each Frame Relay facility. To facilitate implementation, DPI may determine its PLCU in aggregate, by dividing the total number of Local VCs in a given LATA by the total number VCs in that LATA. The Parties agree to renegotiate the method for determining PLCU, at BellSouth's request, and within 90 days, if BellSouth notifies DPI that it has found that this method does not adequately represent the PLCU.

8.5.4 If there are no VCs on a facility when it is billed, the PLCU will be zero.

8.5.5 BellSouth will provide the circuit between the Parties' respective Frame Relay Switches. The Parties will be compensated as follows: BellSouth will invoice, and DPI will pay, the total nonrecurring and recurring charges for the circuit based upon the rates set forth in BellSouth's Interstate Access Tariff, FCC No. 1. DPI will then invoice, and BellSouth will pay, an amount calculated by multiplying the BellSouth billed charges for the circuit by one-half of DPI's PLCU.

8.6 The Parties agree to compensate each other for Frame Relay network-to-network interface (NNI) ports based upon the NNI rates set forth in BellSouth's Interstate Access Tariff, FCC No. 1. Compensation for each pair of NNI ports will be calculated as follows: BellSouth will invoice, and DPI will pay, the total nonrecurring and recurring charges for the NNI port. DPI will then invoice, and BellSouth will pay, an amount calculated by multiplying the BellSouth billed nonrecurring and recurring charges for the NNI port by DPI's PLCU.

8.7 Each Party agrees that there will be no charges to the other Party for its own subscriber's Permanent Virtual Circuit (PVC) rate elements for the local PVC segment from its Frame Relay switch to its own subscriber's premises. PVC rate elements include the Data Link Connection Identifier (DLCI) and Committed Information Rate (CIR).

8.8 For the PVC segment between the DPI and BellSouth Frame Relay switches, compensation for the PVC charges is based upon the rates in BellSouth's Interstate Access Tariff, FCC No. 1.

8.9 Compensation for PVC rate elements will be calculated as follows:

8.9.1 If DPI orders a VC connection between a BellSouth subscriber's PVC segment and a PVC segment from the BellSouth Frame Relay switch to the DPI Frame Relay switch, BellSouth will invoice, and DPI will pay, the total nonrecurring and recurring PVC charges for the PVC segment between the BellSouth and DPI Frame Relay switches. If the VC is a Local VC, DPI will then invoice and BellSouth will pay, the total nonrecurring and recurring PVC charges billed for that segment. If the VC is not local, no compensation will be paid to DPI for the PVC segment.

8.9.2 If BellSouth orders a Local VC connection between a DPI subscriber's PVC segment and a PVC segment from the DPI Frame Relay switch to the BellSouth Frame Relay switch, BellSouth will invoice, and DPI will pay, the total nonrecurring and recurring PVC and CIR charges for the PVC segment between the BellSouth and DPI Frame Relay switches. If the VC is a Local VC, DPI will then invoice and BellSouth will pay the total nonrecurring and recurring PVC and CIR charges billed for that segment. If the VC is not local, no compensation will be paid to DPI for the PVC segment.

8.9.3 The Parties agree to compensate each other for requests to change a PVC segment or PVC service order record, according to the Feature Change charge as set forth in the BellSouth access tariff BellSouth Tariff FCC No. 1.

8.9.4 If DPI requests a change, BellSouth will invoice and DPI will pay a Feature Change charge for each affected PVC segment.

8.9.4.1 If BellSouth requests a change to a Local VC, DPI will invoice and BellSouth will pay a Feature Change charge for each affected PVC segment.

8.9.5 The Parties agree to limit the sum of the CIR for the VCs on a DS1 NNI port to not more than three times the port speed, or not more than six times the port speed on a DS3 NNI port.

8.9.6 Except as expressly provided herein, this Agreement does not address or alter in any way either Party's provision of Exchange Access Frame Relay Service, Managed Shared Frame Relay Service or interLATA Frame Relay Service. All charges by each Party to the other for carriage of Exchange Access Frame Relay Service or interLATA Frame Relay Service are included in the BellSouth access tariff BellSouth Tariff FCC No. 1.

8.10 DPI will identify and report quarterly to BellSouth the PLCU of the Frame Relay facilities it uses, per Section 8.5.3 above.

8.11 Either Party may request a review or audit of the various service components, consistent with the provisions of section E2 of the BellSouth State Access Services tariffs or Section 2 of the BellSouth FCC No.1 Tariff.

9. ORDERING CHARGES

9.1 The terms, conditions and rates for Ordering Charges are as set forth in FCC Tariff for Access Service Records.

Exhibit B

Basic Architecture

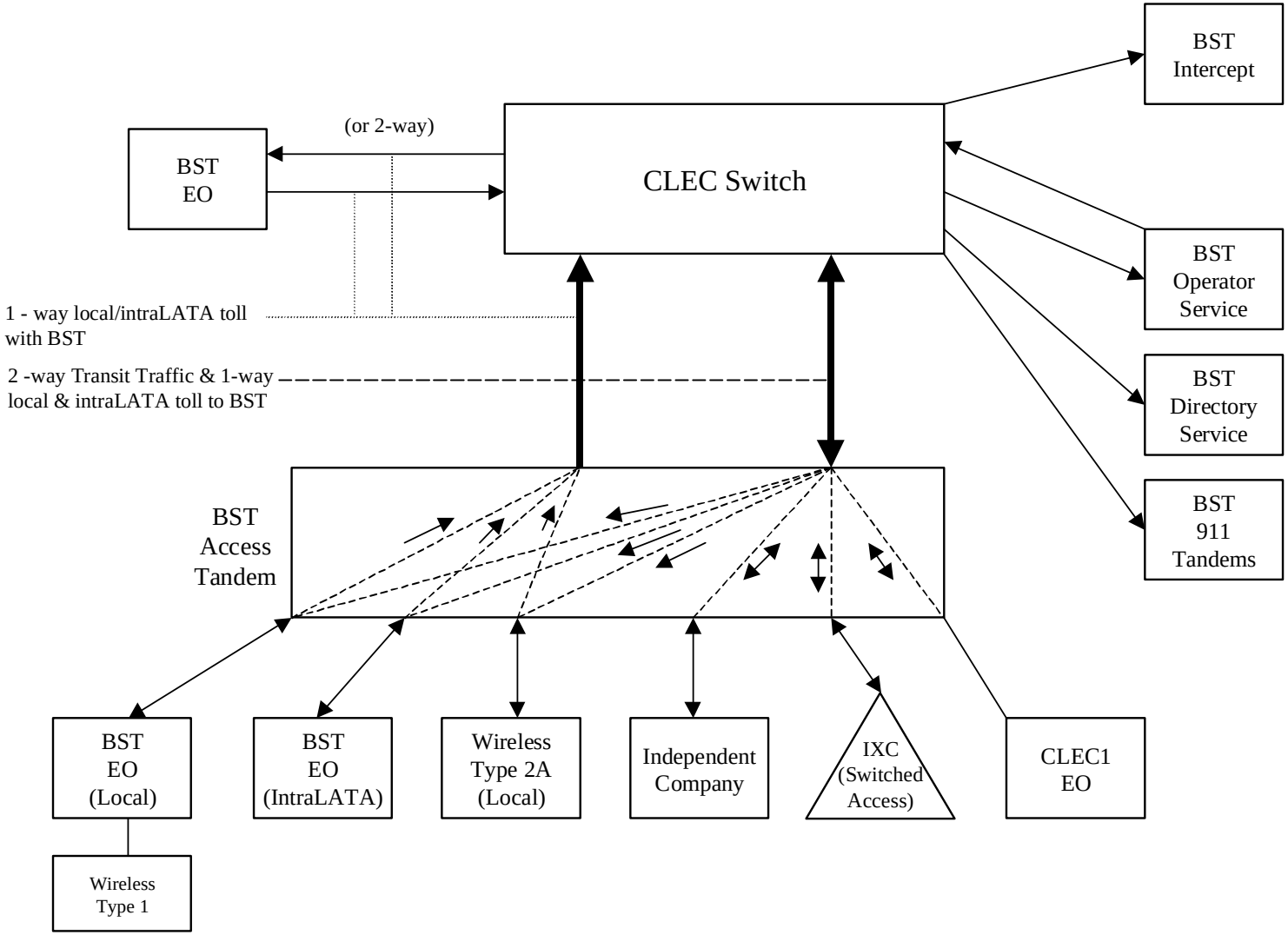

Exhibit C

One-Way Architecture

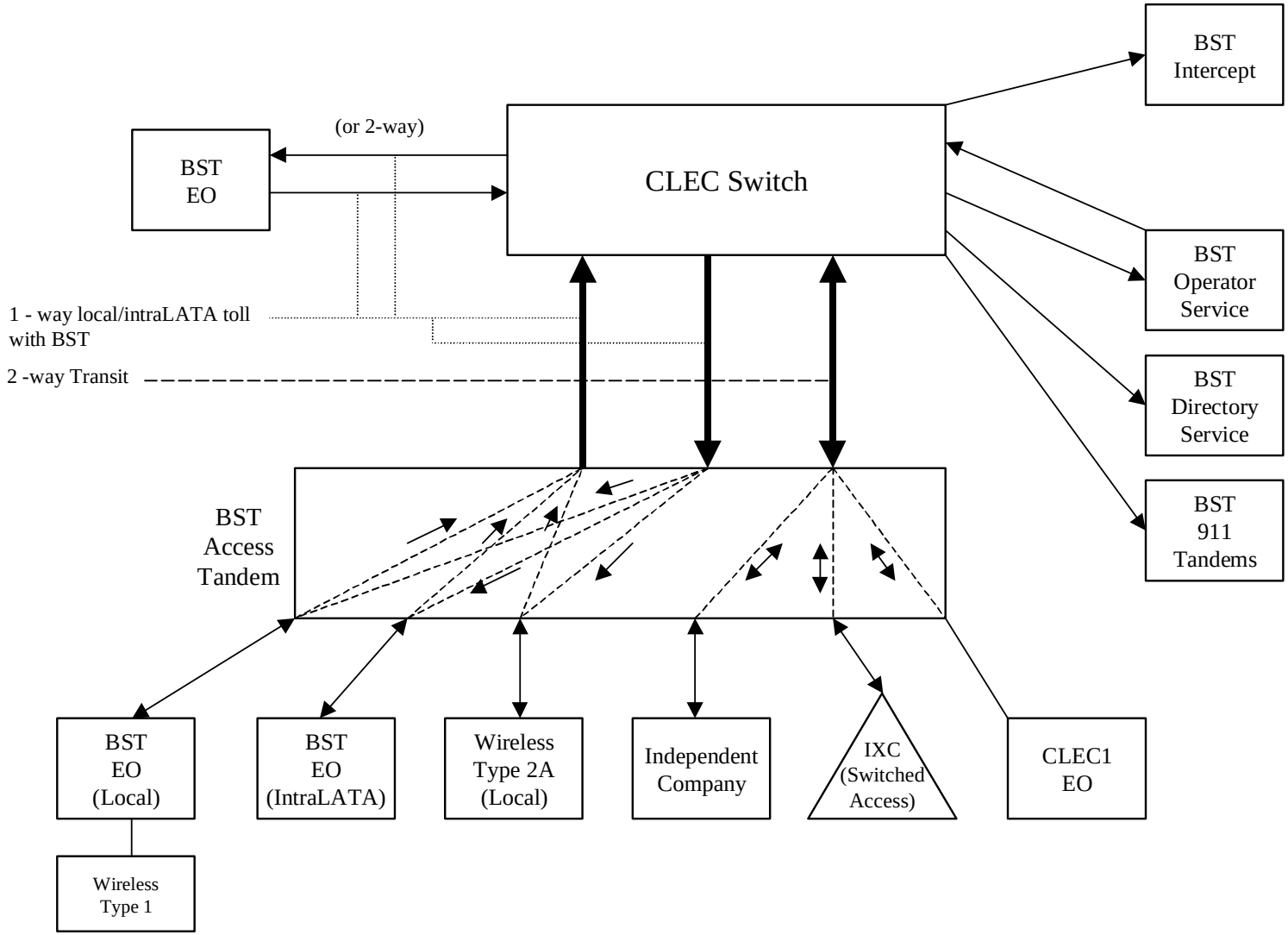

Exhibit D

Two-Way Architecture

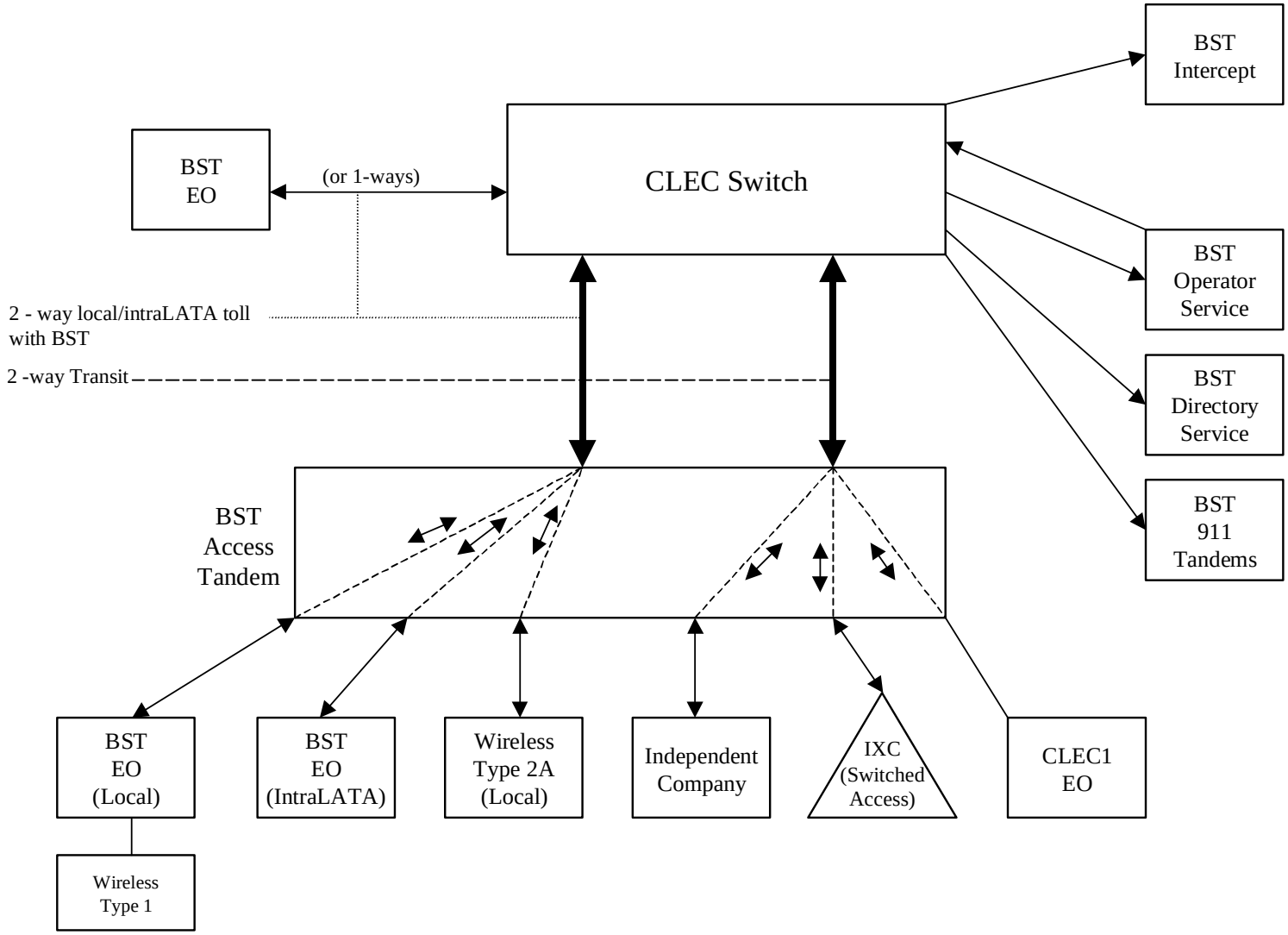

Exhibit E

Supergroup Architecture

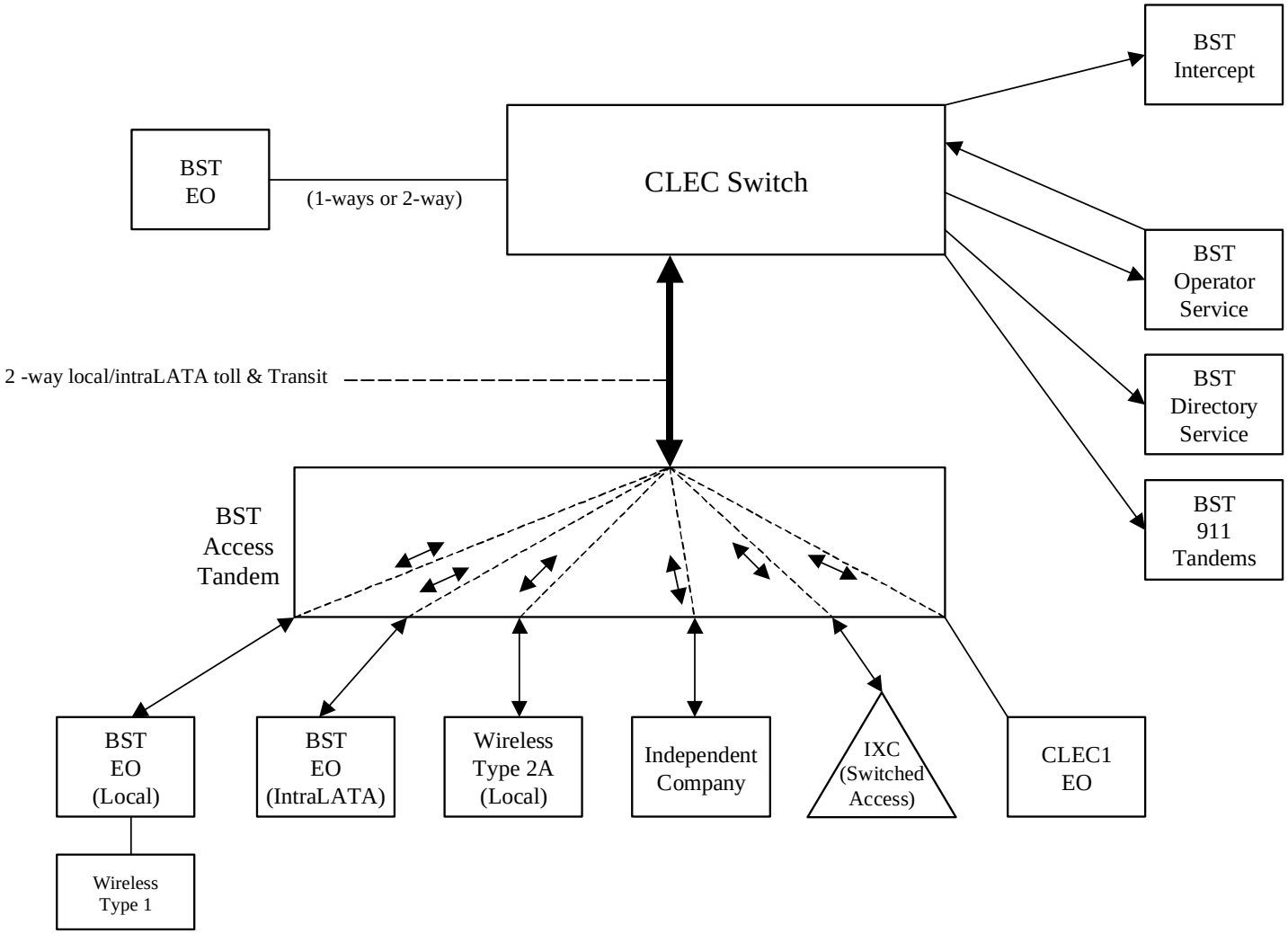

LOCAL INTERCONNECTION - Alabama														Attachment: 3		Exhibit: A	
CATEGORY		RATE ELEMENTS	Interim	Zone	BCS	USOC	RATES ($)					Svc Order Submitted Elec per LSR	Svc Order Submitted Manually per LSR	Incremental Charge - Manual Svc Order vs. Electronic-1st	Incremental Charge - Manual Svc Order vs. Electronic-Add'l	Incremental Charge - Manual Svc Order vs. Electronic-Disc 1st	Incremental Charge - Manual Svc Order vs. Electronic-Disc Add'l
							Rec	Nonrecurring		Nonrecurring Disconnect		OSS Rates ($)					
								First	Add'l	First	Add'l	SOMEC	SOMAN	SOMAN	SOMAN	SOMAN	SOMAN
LOCAL INTERCONNECTION (CALL TRANSPORT AND TERMINATION)																	
	NOTE: "bk" beside a rate indicates that the Parties have agreed to bill and keep for that element pursuant to the terms and conditions in Attachment 3.																
	TANDEM SWITCHING																
		Tandem Switching Function Per MOU			OHD		0.000498bk										
		Multiple Tandem Switching, per MOU (applies to intial tandem only)			OHD		0.000498										
		Tandem Intermediary Charge, per MOU*			OHD		0.0015										
	*** This charge is applicable only to transit traffic and is applied in addition to applicable switching and/or interconnection charges.**																
	TRUNK CHARGE																
		Installation Trunk Side Service - per DS0			OHD	TPP++		21.56	8.12								
		Dedicated End Office Trunk Port Service-per DS0**			OHD	TDE0P	0.00										
		Dedicated End Office Trunk Port Service-per DS1**			0H1 OH1MS	TDE1P	0.00										
		Dedicated Tandem Trunk Port Service-per DS0**			OHD	TDW0P	0.00										
		Dedicated Tandem Trunk Port Service-per DS1**			OH1 OH1MS	TDW1P	0.00										
	**** This rate element is recovered on a per MOU basis and is included in the End Office Switching and Tandem Switching, per MOU rate elements**																
	COMMON TRANSPORT (Shared)																
		Common Transport - Per Mile, Per MOU			OHD		0.0000023bk										
		Common Transport - Facilities Termination Per MOU			OHD		0.0003224bk										
LOCAL INTERCONNECTION (DEDICATED TRANSPORT)																	
	INTEROFFICE CHANNEL - DEDICATED TRANSPORT																
		Interoffice Channel - Dedicated Transport - 2-Wire Voice Grade - Per Mile per month			OHL, OHM	1L5NF	0.008838										
		Interoffice Channel - Dedicated Transport- 2- Wire Voice Grade - Facility Termination per month			OHL, OHM	1L5NF	21.13	40.54	27.41	16.74	6.90						
		Interoffice Channel - Dedicated Transport - 56 kbps - per mile per month			OHL, OHM	1L5NK	0.008838										
		Interoffice Channel - Dedicated Transport - 56 kbps - Facility Termination per month			OHL, OHM	1L5NK	15.12	40.54	27.41	16.74	6.90						
		Interoffice Channel - Dedicated Transport - 64 kbps - per mile per month			OHL, OHM	1L5NK	0.008838										
		Interoffice Channel - Dedicated Transport - 64 kbps - Facility Termination per month			OHL, OHM	1L5NK	15.12	40.54	27.41	16.74	6.90						
		Interoffice Channel - Dedicated Channel - DS1 - Per Mile per month			OH1, OH1MS	1L5NL	0.18										
		Interoffice Channel - Dedicated Tranport - DS1 - Facility Termination per month			OH1, OH1MS	1L5NL	60.16	89.27	81.81	16.35	14.44						
		Interoffice Channel - Dedicated Transport - DS3 - Per Mile per month			OH3, OH3MS	1L5NM	4.09										
		Interoffice Channel - Dedicated Transport - DS3 - Facility Termination per month			OH3, OH3MS	1L5NM	703.52	278.75	162.76	60.20	58.46						
	LOCAL CHANNEL - DEDICATED TRANSPORT																
		Local Channel - Dedicated - 2-Wire Voice Grade per month			OHL, OHM	TEFV2	13.97	193.10	33.17	36.64	3.20						
		Local Channel - Dedicated - 4-Wire Voice Grade per month			OHL, OHM	TEFV4	14.93	193.53	33.60	37.11	3.67						
		Local Channel - Dedicated - DS1 per month			OH1	TEFHG	35.76	177.47	153.72	22.19	15.26						
		Local Channel - Dedicated - DS3 Facility Termination per month			OH3	TEFHJ	416.54	451.52	263.94	119.49	83.58						
	LOCAL INTERCONNECTION MID-SPAN MEET																
	NOTE: If Access service ride Mid-Span Meet, one-half the tariffed service Local Channel rate is applicable.																
		Local Channel - Dedicated - DS1 per month			OH1MS	TEFHG	0.00	0.00									
		Local Channel - Dedicated - DS3 per month			OH3MS	TEFHJ	0.00	0.00									
	MULTIPLEXERS																
		Channelization - DS1 to DS0 Channel System			OH1, OH1MS	SATN1	101.06	91.04	62.57	10.54	9.79						
		DS3 to DS1 Channel System per month			OH3, OH3MS	SATNS	166.13	178.14	93.97	33.26	31.63						
		DS3 Interface Unit (DS1 COCI) per month			OH1, OH1MS	SATCO	12.70	6.58	4.72								
	Notes: If no rate is identified in the contract, the rates, terms, and conditions for the specific service or function will be as set forth in applicable BellSouth tariff.																

LOCAL INTERCONNECTION - Florida														Attachment: 3		Exhibit: A	
CATEGORY	RATE ELEMENTS	Interim	Zone	BCS	USOC	RATES ($)					Svc Order Submitted Elec per LSR	Svc Order Submitted Manually per LSR	Incremental Charge - Manual Svc Order vs. Electronic-1st	Incremental Charge - Manual Svc Order vs. Electronic-Add'l	Incremental Charge - Manual Svc Order vs. Electronic-Disc 1st	Incremental Charge - Manual Svc Order vs. Electronic-Disc Add'l
						Rec	Nonrecurring		Nonrecurring Disconnect		OSS Rates ($)					
							First	Add'l	First	Add'l	SOMEC	SOMAN	SOMAN	SOMAN	SOMAN	SOMAN
LOCAL INTERCONNECTION (CALL TRANSPORT AND TERMINATION)																
NOTE: "bk" beside a rate indicates that the Parties have agreed to bill and keep for that element pursuant to the terms and conditions in Attachment 3.																
TANDEM SWITCHING																
	Tandem Switching Function Per MOU			OHD		0.0006019bk										
	Multiple Tandem Switching, per MOU (applies to intial tandem only)			OHD		0.0006019										
	Tandem Intermediary Charge, per MOU*			OHD		0.0015										
*** This charge is applicable only to transit traffic and is applied in addition to applicable switching and/or interconnection charges.**																
TRUNK CHARGE																
	Installation Trunk Side Service - per DS0			OHD	TPP++		21.73	8.19								
	Dedicated End Office Trunk Port Service-per DS0**			OHD	TDE0P	0.00										
	Dedicated End Office Trunk Port Service-per DS1**			0H1 OH1MS	TDE1P	0.00										
	Dedicated Tandem Trunk Port Service-per DS0**			OHD	TDW0P	0.00										
	Dedicated Tandem Trunk Port Service-per DS1**			OH1 OH1MS	TDW1P	0.00										
**** This rate element is recovered on a per MOU basis and is included in the End Office Switching and Tandem Switching, per MOU rate elements**																
COMMON TRANSPORT (Shared)																
	Common Transport - Per Mile, Per MOU			OHD		0.0000035bk										
	Common Transport - Facilities Termination Per MOU			OHD		0.0004372bk										
LOCAL INTERCONNECTION (DEDICATED TRANSPORT)																
INTEROFFICE CHANNEL - DEDICATED TRANSPORT																
	Interoffice Channel - Dedicated Transport - 2-Wire Voice Grade - Per Mile per month			OHL, OHM	1L5NF	0.0091										
	Interoffice Channel - Dedicated Transport- 2- Wire Voice Grade - Facility Termination per month			OHL, OHM	1L5NF	25.32	47.35	31.78	18.31	7.03						
	Interoffice Channel - Dedicated Transport - 56 kbps - per mile per month			OHL, OHM	1L5NK	0.0091										
	Interoffice Channel - Dedicated Transport - 56 kbps - Facility Termination per month			OHL, OHM	1L5NK	18.44	47.35	31.78	18.31	7.03						
	Interoffice Channel - Dedicated Transport - 64 kbps - per mile per month			OHL, OHM	1L5NK	0.0091										
	Interoffice Channel - Dedicated Transport - 64 kbps - Facility Termination per month			OHL, OHM	1L5NK	18.44	47.35	31.78	18.31	7.03						
	Interoffice Channel - Dedicated Channel - DS1 - Per Mile per month			OH1, OH1MS	1L5NL	0.1856										
	Interoffice Channel - Dedicated Tranport - DS1 - Facility Termination per month			OH1, OH1MS	1L5NL	88.44	105.54	98.47	21.47	19.05						
	Interoffice Channel - Dedicated Transport - DS3 - Per Mile per month			OH3, OH3MS	1L5NM	3.87										
	Interoffice Channel - Dedicated Transport - DS3 - Facility Termination per month			OH3, OH3MS	1L5NM	1,071.00	335.46	219.28	72.03	70.56						
LOCAL CHANNEL - DEDICATED TRANSPORT																
	Local Channel - Dedicated - 2-Wire Voice Grade per month			OHL, OHM	TEFV2	19.66	265.84	46.97	37.63	4.00						
	Local Channel - Dedicated - 4-Wire Voice Grade per month			OHL, OHM	TEFV4	20.45	266.54	47.67	44.22	5.33						
	Local Channel - Dedicated - DS1 per month			OH1	TEFHG	36.49	216.65	183.54	24.30	16.95						
	Local Channel - Dedicated - DS3 Facility Termination per month			OH3	TEFHJ	531.91	556.37	343.01	139.13	96.84						
LOCAL INTERCONNECTION MID-SPAN MEET																
NOTE: If Access service ride Mid-Span Meet, one-half the tariffed service Local Channel rate is applicable.																
	Local Channel - Dedicated - DS1 per month			OH1MS	TEFHG	0.00	0.00									
	Local Channel - Dedicated - DS3 per month			OH3MS	TEFHJ	0.00	0.00									
MULTIPLEXERS																
	Channelization - DS1 to DS0 Channel System			OH1, OH1MS	SATN1	146.77	101.42	71.62	11.09	10.49						
	DS3 to DS1 Channel System per month			OH3, OH3MS	SATNS	211.19	199.28	118.64	40.34	39.07						
	DS3 Interface Unit (DS1 COCI) per month			OH1, OH1MS	SATCO	13.76	10.07	7.08								
Notes: If no rate is identified in the contract, the rates, terms, and conditions for the specific service or function will be as set forth in applicable BellSouth tariff.																

LOCAL INTERCONNECTION - Georgia														Attachment: 3		Exhibit: A	
CATEGORY	RATE ELEMENTS	Interim	Zone	BCS	USOC	RATES ($)					Svc Order Submitted Elec per LSR	Svc Order Submitted Manually per LSR	Incremental Charge - Manual Svc Order vs. Electronic-1st	Incremental Charge - Manual Svc Order vs. Electronic-Add'l	Incremental Charge - Manual Svc Order vs. Electronic-Disc 1st	Incremental Charge - Manual Svc Order vs. Electronic-Disc Add'l
						Rec	Nonrecurring		Nonrecurring Disconnect		OSS Rates ($)					
							First	Add'l	First	Add'l	SOMEC	SOMAN	SOMAN	SOMAN	SOMAN	SOMAN
LOCAL INTERCONNECTION (CALL TRANSPORT AND TERMINATION)																
NOTE: "bk" beside a rate indicates that the Parties have agreed to bill and keep for that element pursuant to the terms and conditions in Attachment 3.																
TANDEM SWITCHING																
	Tandem Switching Function Per MOU			OHD		0.0011009bk										
	Multiple Tandem Switching, per MOU (applies to intial tandem only)			OHD		0.0011009										
	Tandem Intermediary Charge, per MOU*			OHD		0.0015										
*** This charge is applicable only to transit traffic and is applied in addition to applicable switching and/or interconnection charges.**																
TRUNK CHARGE																
	Installation Trunk Side Service - per DS0			OHD	TPP++		21.53	8.11								
	Dedicated End Office Trunk Port Service-per DS0**			OHD	TDE0P	0.00										
	Dedicated End Office Trunk Port Service-per DS1**			0H1 OH1MS	TDE1P	0.00										
	Dedicated Tandem Trunk Port Service-per DS0**			OHD	TDW0P	0.00										
	Dedicated Tandem Trunk Port Service-per DS1**			OH1 OH1MS	TDW1P	0.00										
**** This rate element is recovered on a per MOU basis and is included in the End Office Switching and Tandem Switching, per MOU rate elements**																
COMMON TRANSPORT (Shared)																
	Common Transport - Per Mile, Per MOU			OHD		0.0000080bk										
	Common Transport - Facilities Termination Per MOU			OHD		0.0004152bk										
LOCAL INTERCONNECTION (DEDICATED TRANSPORT)																
INTEROFFICE CHANNEL - DEDICATED TRANSPORT																
	Interoffice Channel - Dedicated Transport - 2-Wire Voice Grade - Per Mile per month			OHL, OHM	1L5NF	0.0222										
	Interoffice Channel - Dedicated Transport- 2- Wire Voice Grade - Facility Termination per month			OHL, OHM	1L5NF	17.07	79.61	36.08								
	Interoffice Channel - Dedicated Transport - 56 kbps - per mile per month			OHL, OHM	1L5NK	0.0222										
	Interoffice Channel - Dedicated Transport - 56 kbps - Facility Termination per month			OHL, OHM	1L5NK	16.45	79.61	36.08								
	Interoffice Channel - Dedicated Transport - 64 kbps - per mile per month			OHL, OHM	1L5NK	0.0222										
	Interoffice Channel - Dedicated Transport - 64 kbps - Facility Termination per month			OHL, OHM	1L5NK	16.45	79.61	36.08								
	Interoffice Channel - Dedicated Channel - DS1 - Per Mile per month			OH1, OH1MS	1L5NL	0.4523										
	Interoffice Channel - Dedicated Tranport - DS1 - Facility Termination per month			OH1, OH1MS	1L5NL	78.47	147.07	111.75								
	Interoffice Channel - Dedicated Transport - DS3 - Per Mile per month			OH3, OH3MS	1L5NM	2.72										
	Interoffice Channel - Dedicated Transport - DS3 - Facility Termination per month			OH3, OH3MS	1L5NM	788.00	511.10	330.77								
LOCAL CHANNEL - DEDICATED TRANSPORT																
	Local Channel - Dedicated - 2-Wire Voice Grade per month			OHL, OHM	TEFV2	13.91	382.95	62.40								
	Local Channel - Dedicated - 4-Wire Voice Grade per month			OHL, OHM	TEFV4	14.99	368.44	64.05								
	Local Channel - Dedicated - DS1 per month			OH1	TEFHG	38.36	356.15	312.89								
	Local Channel - Dedicated - DS3 Facility Termination per month			OH3	TEFHJ	515.91	639.50	426.31								
LOCAL INTERCONNECTION MID-SPAN MEET																
NOTE: If Access service ride Mid-Span Meet, one-half the tariffed service Local Channel rate is applicable.																
	Local Channel - Dedicated - DS1 per month			OH1MS	TEFHG	0.00	0.00									
	Local Channel - Dedicated - DS3 per month			OH3MS	TEFHJ	0.00	0.00									
MULTIPLEXERS																
	Channelization - DS1 to DS0 Channel System			OH1, OH1MS	SATN1	126.22	198.22	123.59								
	DS3 to DS1 Channel System per month			OH3, OH3MS	SATNS	182.04	280.66	195.33								
	DS3 Interface Unit (DS1 COCI) per month			OH1, OH1MS	SATCO	11.02	12.02	8.66								
Notes: If no rate is identified in the contract, the rates, terms, and conditions for the specific service or function will be as set forth in applicable BellSouth tariff.																

LOCAL INTERCONNECTION - Kentucky														Attachment: 3		Exhibit: A	
CATEGORY		RATE ELEMENTS	Interim	Zone	BCS	USOC	RATES ($)					Svc Order Submitted Elec per LSR	Svc Order Submitted Manually per LSR	Incremental Charge - Manual Svc Order vs. Electronic-1st	Incremental Charge - Manual Svc Order vs. Electronic-Add'l	Incremental Charge - Manual Svc Order vs. Electronic-Disc 1st	Incremental Charge - Manual Svc Order vs. Electronic-Disc Add'l
							Rec	Nonrecurring		Nonrecurring Disconnect		OSS Rates ($)					
								First	Add'l	First	Add'l	SOMEC	SOMAN	SOMAN	SOMAN	SOMAN	SOMAN
LOCAL INTERCONNECTION (CALL TRANSPORT AND TERMINATION)																	
	NOTE: "bk" beside a rate indicates that the Parties have agreed to bill and keep for that element pursuant to the terms and conditions in Attachment 3.																
	TANDEM SWITCHING																
		Tandem Switching Function Per MOU			OHD		0.0006772bk										
		Multiple Tandem Switching, per MOU (applies to intial tandem only)			OHD		0.0006772										
		Tandem Intermediary Charge, per MOU*			OHD		0.0015										
	* This charge is applicable only to transit traffic and is applied in addition to applicable switching and/or interconnection charges.																
	TRUNK CHARGE																
		Installation Trunk Side Service - per DS0			OHD	TPP++		21.58	8.13								
		Dedicated End Office Trunk Port Service-per DS0**			OHD	TDE0P	0.00										
		Dedicated End Office Trunk Port Service-per DS1**			0H1 OH1MS	TDE1P	0.00										
		Dedicated Tandem Trunk Port Service-per DS0**			OHD	TDW0P	0.00										
		Dedicated Tandem Trunk Port Service-per DS1**			OH1 OH1MS	TDW1P	0.00										
	** This rate element is recovered on a per MOU basis and is included in the End Office Switching and Tandem Switching, per MOU rate elements																
	COMMON TRANSPORT (Shared)																
		Common Transport - Per Mile, Per MOU			OHD		0.0000030bk										
		Common Transport - Facilities Termination Per MOU			OHD		0.0007466bk										
LOCAL INTERCONNECTION (DEDICATED TRANSPORT)																	
	INTEROFFICE CHANNEL - DEDICATED TRANSPORT																
		Interoffice Channel - Dedicated Transport - 2-Wire Voice Grade - Per Mile per month			OHL, OHM	1L5NF	0.01										
		Interoffice Channel - Dedicated Transport- 2- Wire Voice Grade - Facility Termination per month			OHL, OHM	1L5NF	29.11	47.34	31.78	22.77	8.75						
		Interoffice Channel - Dedicated Transport - 56 kbps - per mile per month			OHL, OHM	1L5NK	0.0115										
		Interoffice Channel - Dedicated Transport - 56 kbps - Facility Termination per month			OHL, OHM	1L5NK	20.97	47.35	31.78	22.77	8.75						
		Interoffice Channel - Dedicated Transport - 64 kbps - per mile per month			OHL, OHM	1L5NK	0.0115										
		Interoffice Channel - Dedicated Transport - 64 kbps - Facility Termination per month			OHL, OHM	1L5NK	20.97	47.35	31.78	22.77	8.75						
		Interoffice Channel - Dedicated Channel - DS1 - Per Mile per month			OH1, OH1MS	1L5NL	0.23										
		Interoffice Channel - Dedicated Tranport - DS1 - Facility Termination per month			OH1, OH1MS	1L5NL	96.04	105.52	98.46	23.09	20.49						
		Interoffice Channel - Dedicated Transport - DS3 - Per Mile per month			OH3, OH3MS	1L5NM	4.97										
		Interoffice Channel - Dedicated Transport - DS3 - Facility Termination per month			OH3, OH3MS	1L5NM	1,175.15	335.40	219.24	89.57	87.75						
	LOCAL CHANNEL - DEDICATED TRANSPORT																
		Local Channel - Dedicated - 2-Wire Voice Grade per month			OHL, OHM	TEFV2	18.57	265.78	46.96	46.79	4.98						
		Local Channel - Dedicated - 4-Wire Voice Grade per month			OHL, OHM	TEFV4	19.86	266.48	47.65	47.54	5.73						
		Local Channel - Dedicated - DS1 per month			OH1	TEFHG	40.46	209.60	176.51	30.21	21.07						
		Local Channel - Dedicated - DS3 Facility Termination per month			OH3	TEFHJ	576.05	551.38	338.08	173.00	120.42						
	LOCAL INTERCONNECTION MID-SPAN MEET																
	NOTE: If Access service ride Mid-Span Meet, one-half the tariffed service Local Channel rate is applicable.																
		Local Channel - Dedicated - DS1 per month			OH1MS	TEFHG	0.00	0.00									
		Local Channel - Dedicated - DS3 per month			OH3MS	TEFHJ	0.00	0.00									
	MULTIPLEXERS																
		Channelization - DS1 to DS0 Channel System			OH1, OH1MS	SATN1	113.33	101.40	71.60	13.79	13.04						
		DS3 to DS1 Channel System per month			OH3, OH3MS	SATNS	158.20	199.23	118.62	50.16	48.59						
		DS3 Interface Unit (DS1 COCI) per month			OH1, OH1MS	SATCO	11.80	10.07	7.08								
	Notes: If no rate is identified in the contract, the rates, terms, and conditions for the specific service or function will be as set forth in applicable BellSouth tariff.																

LOCAL INTERCONNECTION - Louisiana														Attachment: 3		Exhibit: A	
CATEGORY	RATE ELEMENTS	Interim	Zone	BCS	USOC	RATES ($)					Svc Order Submitted Elec per LSR	Svc Order Submitted Manually per LSR	Incremental Charge - Manual Svc Order vs. Electronic-1st	Incremental Charge - Manual Svc Order vs. Electronic-Add'l	Incremental Charge - Manual Svc Order vs. Electronic-Disc 1st	Incremental Charge - Manual Svc Order vs. Electronic-Disc Add'l
						Rec	Nonrecurring		Nonrecurring Disconnect		OSS Rates ($)					
							First	Add'l	First	Add'l	SOMEC	SOMAN	SOMAN	SOMAN	SOMAN	SOMAN
LOCAL INTERCONNECTION (CALL TRANSPORT AND TERMINATION)																
NOTE: "bk" beside a rate indicates that the Parties have agreed to bill and keep for that element pursuant to the terms and conditions in Attachment 3.																
TANDEM SWITCHING																
	Tandem Switching Function Per MOU			OHD		0.0005507bk										
	Multiple Tandem Switching, per MOU (applies to intial tandem only)			OHD		0.0005507										
	Tandem Intermediary Charge, per MOU*			OHD		0.0015										
*** This charge is applicable only to transit traffic and is applied in addition to applicable switching and/or interconnection charges.**																
TRUNK CHARGE																
	Installation Trunk Side Service - per DS0			OHD	TPP++		21.64	8.15								
	Dedicated End Office Trunk Port Service-per DS0**			OHD	TDE0P	0.00										
	Dedicated End Office Trunk Port Service-per DS1**			0H1 OH1MS	TDE1P	0.00										
	Dedicated Tandem Trunk Port Service-per DS0**			OHD	TDW0P	0.00										
	Dedicated Tandem Trunk Port Service-per DS1**			OH1 OH1MS	TDW1P	0.00										
**** This rate element is recovered on a per MOU basis and is included in the End Office Switching and Tandem Switching, per MOU rate elements**																
COMMON TRANSPORT (Shared)																
	Common Transport - Per Mile, Per MOU			OHD		0.0000032bk										
	Common Transport - Facilities Termination Per MOU			OHD		0.0003748bk										
LOCAL INTERCONNECTION (DEDICATED TRANSPORT)																
INTEROFFICE CHANNEL - DEDICATED TRANSPORT																
	Interoffice Channel - Dedicated Transport - 2-Wire Voice Grade - Per Mile per month			OHL, OHM	1L5NF	0.013										
	Interoffice Channel - Dedicated Transport- 2- Wire Voice Grade - Facility Termination per month			OHL, OHM	1L5NF	22.60	39.36	26.62								
	Interoffice Channel - Dedicated Transport - 56 kbps - per mile per month			OHL, OHM	1L5NK	0.013										
	Interoffice Channel - Dedicated Transport - 56 kbps - Facility Termination per month			OHL, OHM	1L5NK	15.61	39.37	26.62								
	Interoffice Channel - Dedicated Transport - 64 kbps - per mile per month			OHL, OHM	1L5NK	0.013										
	Interoffice Channel - Dedicated Transport - 64 kbps - Facility Termination per month			OHL, OHM	1L5NK	15.61	39.37	26.62								
	Interoffice Channel - Dedicated Channel - DS1 - Per Mile per month			OH1, OH1MS	1L5NL	0.2652										
	Interoffice Channel - Dedicated Tranport - DS1 - Facility Termination per month			OH1, OH1MS	1L5NL	70.47	86.69	79.44								
	Interoffice Channel - Dedicated Transport - DS3 - Per Mile per month			OH3, OH3MS	1L5NM	6.04										
	Interoffice Channel - Dedicated Transport - DS3 - Facility Termination per month			OH3, OH3MS	1L5NM	850.45	270.69	158.05								
LOCAL CHANNEL - DEDICATED TRANSPORT																
	Local Channel - Dedicated - 2-Wire Voice Grade per month			OHL, OHM	TEFV2	18.32	187.51	32.21								
	Local Channel - Dedicated - 4-Wire Voice Grade per month			OHL, OHM	TEFV4	19.41	187.94	32.63								
	Local Channel - Dedicated - DS1 per month			OH1	TEFHG	39.18	172.34	149.27								
	Local Channel - Dedicated - DS3 Facility Termination per month			OH3	TEFHJ	469.44	438.46	256.30								
LOCAL INTERCONNECTION MID-SPAN MEET																
NOTE: If Access service ride Mid-Span Meet, one-half the tariffed service Local Channel rate is applicable.																
	Local Channel - Dedicated - DS1 per month			OH1MS	TEFHG	0.00	0.00									
	Local Channel - Dedicated - DS3 per month			OH3MS	TEFHJ	0.00	0.00									
MULTIPLEXERS																
	Channelization - DS1 to DS0 Channel System			OH1, OH1MS	SATN1	105.09	88.41	60.76								
	DS3 to DS1 Channel System per month			OH3, OH3MS	SATNS	201.48	172.99	91.25								
	DS3 Interface Unit (DS1 COCI) per month			OH1, OH1MS	SATCO	11.78	6.39	4.58								
Notes: If no rate is identified in the contract, the rates, terms, and conditions for the specific service or function will be as set forth in applicable BellSouth tariff.																

LOCAL INTERCONNECTION - Mississippi														Attachment: 3		Exhibit: A	
CATEGORY	RATE ELEMENTS	Interim	Zone	BCS	USOC	RATES ($)					Svc Order Submitted Elec per LSR	Svc Order Submitted Manually per LSR	Incremental Charge - Manual Svc Order vs. Electronic-1st	Incremental Charge - Manual Svc Order vs. Electronic-Add'l	Incremental Charge - Manual Svc Order vs. Electronic-Disc 1st	Incremental Charge - Manual Svc Order vs. Electronic-Disc Add'l
						Rec	Nonrecurring		Nonrecurring Disconnect		OSS Rates ($)					
							First	Add'l	First	Add'l	SOMEC	SOMAN	SOMAN	SOMAN	SOMAN	SOMAN
LOCAL INTERCONNECTION (CALL TRANSPORT AND TERMINATION)																
NOTE: "bk" beside a rate indicates that the Parties have agreed to bill and keep for that element pursuant to the terms and conditions in Attachment 3.																
TANDEM SWITCHING																
	Tandem Switching Function Per MOU			OHD		0.0005379bk										
	Multiple Tandem Switching, per MOU (applies to intial tandem only)			OHD		0.0005379										
	Tandem Intermediary Charge, per MOU*			OHD		0.0015										
*** This charge is applicable only to transit traffic and is applied in addition to applicable switching and/or interconnection charges.**																
TRUNK CHARGE																
	Installation Trunk Side Service - per DS0			OHD	TPP++		21.58	8.13								
	Dedicated End Office Trunk Port Service-per DS0**			OHD	TDE0P	0.00										
	Dedicated End Office Trunk Port Service-per DS1**			0H1 OH1MS	TDE1P	0.00										
	Dedicated Tandem Trunk Port Service-per DS0**			OHD	TDW0P	0.00										
	Dedicated Tandem Trunk Port Service-per DS1**			OH1 OH1MS	TDW1P	0.00										
**** This rate element is recovered on a per MOU basis and is included in the End Office Switching and Tandem Switching, per MOU rate elements**																
COMMON TRANSPORT (Shared)																
	Common Transport - Per Mile, Per MOU			OHD		0.0000026bk										
	Common Transport - Facilities Termination Per MOU			OHD		0.0004541bk										
LOCAL INTERCONNECTION (DEDICATED TRANSPORT)																
INTEROFFICE CHANNEL - DEDICATED TRANSPORT																
	Interoffice Channel - Dedicated Transport - 2-Wire Voice Grade - Per Mile per month			OHL, OHM	1L5NF	0.0098										
	Interoffice Channel - Dedicated Transport- 2- Wire Voice Grade - Facility Termination per month			OHL, OHM	1L5NF	22.52	40.77	27.57	17.26	7.11						
	Interoffice Channel - Dedicated Transport - 56 kbps - per mile per month			OHL, OHM	1L5NK	0.0098										
	Interoffice Channel - Dedicated Transport - 56 kbps - Facility Termination per month			OHL, OHM	1L5NK	15.68	40.78	27.57	17.26	7.11						
	Interoffice Channel - Dedicated Transport - 64 kbps - per mile per month			OHL, OHM	1L5NK	0.0098										
	Interoffice Channel - Dedicated Transport - 64 kbps - Facility Termination per month			OHL, OHM	1L5NK	15.68	40.78	27.57	17.26	7.11						
	Interoffice Channel - Dedicated Channel - DS1 - Per Mile per month			OH1, OH1MS	1L5NL	0.201										
	Interoffice Channel - Dedicated Tranport - DS1 - Facility Termination per month			OH1, OH1MS	1L5NL	57.33	89.79	82.28	16.86	14.90						
	Interoffice Channel - Dedicated Transport - DS3 - Per Mile per month			OH3, OH3MS	1L5NM	4.76										
	Interoffice Channel - Dedicated Transport - DS3 - Facility Termination per month			OH3, OH3MS	1L5NM	641.90	280.37	163.70	62.08	60.29						
LOCAL CHANNEL - DEDICATED TRANSPORT																
	Local Channel - Dedicated - 2-Wire Voice Grade per month			OHL, OHM	TEFV2	14.91	194.22	33.36	37.79	3.30						
	Local Channel - Dedicated - 4-Wire Voice Grade per month			OHL, OHM	TEFV4	15.99	194.66	33.80	38.27	3.78						
	Local Channel - Dedicated - DS1 per month			OH1	TEFHG	36.83	178.50	154.61	22.89	15.74						
	Local Channel - Dedicated - DS3 Facility Termination per month			OH3	TEFHJ	413.87	454.13	264.47	123.23	86.19						
LOCAL INTERCONNECTION MID-SPAN MEET																
NOTE: If Access service ride Mid-Span Meet, one-half the tariffed service Local Channel rate is applicable.																
	Local Channel - Dedicated - DS1 per month			OH1MS	TEFHG	0.00	0.00									
	Local Channel - Dedicated - DS3 per month			OH3MS	TEFHJ	0.00	0.00									
MULTIPLEXERS																
	Channelization - DS1 to DS0 Channel System			OH1, OH1MS	SATN1	102.85	91.57	62.94	10.87	10.10						
	DS3 to DS1 Channel System per month			OH3, OH3MS	SATNS	170.63	179.17	94.52	34.30	32.82						
	DS3 Interface Unit (DS1 COCI) per month			OH1, OH1MS	SATCO	12.96	6.62	4.74								
Notes: If no rate is identified in the contract, the rates, terms, and conditions for the specific service or function will be as set forth in applicable BellSouth tariff.																

LOCAL INTERCONNECTION - North Carolina														Attachment: 3		Exhibit: A	
CATEGORY		RATE ELEMENTS	Interim	Zone	BCS	USOC	RATES ($)					Svc Order Submitted Elec per LSR	Svc Order Submitted Manually per LSR	Incremental Charge - Manual Svc Order vs. Electronic-1st	Incremental Charge - Manual Svc Order vs. Electronic-Add'l	Incremental Charge - Manual Svc Order vs. Electronic-Disc 1st	Incremental Charge - Manual Svc Order vs. Electronic-Disc Add'l
							Rec	Nonrecurring		Nonrecurring Disconnect		OSS Rates ($)					
								First	Add'l	First	Add'l	SOMEC	SOMAN	SOMAN	SOMAN	SOMAN	SOMAN
LOCAL INTERCONNECTION (CALL TRANSPORT AND TERMINATION)																	
	NOTE: "bk" beside a rate indicates that the Parties have agreed to bill and keep for that element pursuant to the terms and conditions in Attachment 3.																
	TANDEM SWITCHING																
		Tandem Switching Function Per MOU			OHD		0.0012000bk										
		Multiple Tandem Switching, per MOU (applies to intial tandem only)			OHD		0.0012										
		Tandem Intermediary Charge, per MOU*			OHD		0.0015										
	*** This charge is applicable only to transit traffic and is applied in addition to applicable switching and/or interconnection charges.**																
	TRUNK CHARGE																
		Installation Trunk Side Service - per DS0			OHD	TPP++		21.55	8.12								
		Dedicated End Office Trunk Port Service-per DS0**			OHD	TDE0P	0.00										
		Dedicated End Office Trunk Port Service-per DS1**			0H1 OH1MS	TDE1P	0.00										
		Dedicated Tandem Trunk Port Service-per DS0**			OHD	TDW0P	0.00										
		Dedicated Tandem Trunk Port Service-per DS1**			OH1 OH1MS	TDW1P	0.00										
	**** This rate element is recovered on a per MOU basis and is included in the End Office Switching and Tandem Switching, per MOU rate elements**																
	COMMON TRANSPORT (Shared)																
		Common Transport - Per Mile, Per MOU			OHD		0.0000100bk										
		Common Transport - Facilities Termination Per MOU			OHD		0.0003400bk										
LOCAL INTERCONNECTION (DEDICATED TRANSPORT)																	
	INTEROFFICE CHANNEL - DEDICATED TRANSPORT																
		Interoffice Channel - Dedicated Transport - 2-Wire Voice Grade - Per Mile per month			OHL, OHM	1L5NF	0.0282										
		Interoffice Channel - Dedicated Transport- 2- Wire Voice Grade - Facility Termination per month			OHL, OHM	1L5NF	18.00	137.48	52.58								
		Interoffice Channel - Dedicated Transport - 56 kbps - per mile per month			OHL, OHM	1L5NK	0.0282										
		Interoffice Channel - Dedicated Transport - 56 kbps - Facility Termination per month			OHL, OHM	1L5NK	17.40	137.48	52.58								
		Interoffice Channel - Dedicated Transport - 64 kbps - per mile per month			OHL, OHM	1L5NK	0.0282										
		Interoffice Channel - Dedicated Transport - 64 kbps - Facility Termination per month			OHL, OHM	1L5NK	17.40	137.48	52.58								
		Interoffice Channel - Dedicated Channel - DS1 - Per Mile per month			OH1, OH1MS	1L5NL	0.5753										
		Interoffice Channel - Dedicated Tranport - DS1 - Facility Termination per month			OH1, OH1MS	1L5NL	71.29	217.17	163.75								
		Interoffice Channel - Dedicated Transport - DS3 - Per Mile per month			OH3, OH3MS	1L5NM	12.98										
		Interoffice Channel - Dedicated Transport - DS3 - Facility Termination per month			OH3, OH3MS	1L5NM	720.38	794.94	579.55								
	LOCAL CHANNEL - DEDICATED TRANSPORT																
		Local Channel - Dedicated - 2-Wire Voice Grade per month			OHL, OHM	TEFV2	11.24	553.80	89.69								
		Local Channel - Dedicated - 4-Wire Voice Grade per month			OHL, OHM	TEFV4	12.03	562.23	92.67								
		Local Channel - Dedicated - DS1 per month			OH1	TEFHG	27.05	534.48	462.69								
		Local Channel - Dedicated - DS3 Facility Termination per month			OH3	TEFHJ	298.92	438.46	256.30								
	LOCAL INTERCONNECTION MID-SPAN MEET																
	NOTE: If Access service ride Mid-Span Meet, one-half the tariffed service Local Channel rate is applicable.																
		Local Channel - Dedicated - DS1 per month			OH1MS	TEFHG	0.00	0.00									
		Local Channel - Dedicated - DS3 per month			OH3MS	TEFHJ	0.00	0.00									
	MULTIPLEXERS																
		Channelization - DS1 to DS0 Channel System			OH1, OH1MS	SATN1	146.69	197.78	140.06								
		DS3 to DS1 Channel System per month			OH3, OH3MS	SATNS	233.10	403.97	234.40								
		DS3 Interface Unit (DS1 COCI) per month			OH1, OH1MS	SATCO	16.07	13.09	9.38								
	Notes: If no rate is identified in the contract, the rates, terms, and conditions for the specific service or function will be as set forth in applicable BellSouth tariff.																

LOCAL INTERCONNECTION - South Carolina														Attachment: 3		Exhibit: A	
CATEGORY	RATE ELEMENTS	Interim	Zone	BCS	USOC	RATES ($)					Svc Order Submitted Elec per LSR	Svc Order Submitted Manually per LSR	Incremental Charge - Manual Svc Order vs. Electronic-1st	Incremental Charge - Manual Svc Order vs. Electronic-Add'l	Incremental Charge - Manual Svc Order vs. Electronic-Disc 1st	Incremental Charge - Manual Svc Order vs. Electronic-Disc Add'l
						Rec	Nonrecurring		Nonrecurring Disconnect		OSS Rates ($)					
							First	Add'l	First	Add'l	SOMEC	SOMAN	SOMAN	SOMAN	SOMAN	SOMAN
LOCAL INTERCONNECTION (CALL TRANSPORT AND TERMINATION)																
NOTE: "bk" beside a rate indicates that the Parties have agreed to bill and keep for that element pursuant to the terms and conditions in Attachment 3.																
TANDEM SWITCHING																
	Tandem Switching Function Per MOU			OHD		0.0007360bk										
	Multiple Tandem Switching, per MOU (applies to intial tandem only)			OHD		0.000736										
	Tandem Intermediary Charge, per MOU*			OHD		0.0015										
*** This charge is applicable only to transit traffic and is applied in addition to applicable switching and/or interconnection charges.**																
TRUNK CHARGE																
	Installation Trunk Side Service - per DS0			OHD	TPP++		21.65	8.16								
	Dedicated End Office Trunk Port Service-per DS0**			OHD	TDE0P	0.00										
	Dedicated End Office Trunk Port Service-per DS1**			0H1 OH1MS	TDE1P	0.00										
	Dedicated Tandem Trunk Port Service-per DS0**			OHD	TDW0P	0.00										
	Dedicated Tandem Trunk Port Service-per DS1**			OH1 OH1MS	TDW1P	0.00										
**** This rate element is recovered on a per MOU basis and is included in the End Office Switching and Tandem Switching, per MOU rate elements**																
COMMON TRANSPORT (Shared)																
	Common Transport - Per Mile, Per MOU			OHD		0.0000045bk										
	Common Transport - Facilities Termination Per MOU			OHD		0.0004095bk										
LOCAL INTERCONNECTION (DEDICATED TRANSPORT)																
INTEROFFICE CHANNEL - DEDICATED TRANSPORT																
	Interoffice Channel - Dedicated Transport - 2-Wire Voice Grade - Per Mile per month			OHL, OHM	1L5NF	0.0167										
	Interoffice Channel - Dedicated Transport- 2- Wire Voice Grade - Facility Termination per month			OHL, OHM	1L5NF	24.30	40.63	27.47	16.77	6.91						
	Interoffice Channel - Dedicated Transport - 56 kbps - per mile per month			OHL, OHM	1L5NK	0.0167										
	Interoffice Channel - Dedicated Transport - 56 kbps - Facility Termination per month			OHL, OHM	1L5NK	16.76	40.63	27.47	16.77	6.91						
	Interoffice Channel - Dedicated Transport - 64 kbps - per mile per month			OHL, OHM	1L5NK	0.0167										
	Interoffice Channel - Dedicated Transport - 64 kbps - Facility Termination per month			OHL, OHM	1L5NK	16.76	40.63	27.47	16.77	6.91						
	Interoffice Channel - Dedicated Channel - DS1 - Per Mile per month			OH1, OH1MS	1L5NL	0.3415										
	Interoffice Channel - Dedicated Tranport - DS1 - Facility Termination per month			OH1, OH1MS	1L5NL	77.14	89.47	81.99	16.39	14.48						
	Interoffice Channel - Dedicated Transport - DS3 - Per Mile per month			OH3, OH3MS	1L5NM	8.02										
	Interoffice Channel - Dedicated Transport - DS3 - Facility Termination per month			OH3, OH3MS	1L5NM	880.65	279.37	163.12	60.33	58.59						
LOCAL CHANNEL - DEDICATED TRANSPORT																
	Local Channel - Dedicated - 2-Wire Voice Grade per month			OHL, OHM	TEFV2	15.33	193.53	33.24	36.72	3.21						
	Local Channel - Dedicated - 4-Wire Voice Grade per month			OHL, OHM	TEFV4	16.54	193.97	33.68	37.19	3.68						
	Local Channel - Dedicated - DS1 per month			OH1	TEFHG	42.62	177.87	154.06	22.24	15.30						
	Local Channel - Dedicated - DS3 Facility Termination per month			OH3	TEFHJ	446.00	452.52	264.53	119.75	83.77						
LOCAL INTERCONNECTION MID-SPAN MEET																
NOTE: If Access service ride Mid-Span Meet, one-half the tariffed service Local Channel rate is applicable.																
	Local Channel - Dedicated - DS1 per month			OH1MS	TEFHG	0.00	0.00									
	Local Channel - Dedicated - DS3 per month			OH3MS	TEFHJ	0.00	0.00									
MULTIPLEXERS																
	Channelization - DS1 to DS0 Channel System			OH1, OH1MS	SATN1	107.57	91.24	62.71	10.56	9.81						
	DS3 to DS1 Channel System per month			OH3, OH3MS	SATNS	144.02	178.54	94.18	33.33	31.90						
	DS3 Interface Unit (DS1 COCI) per month			OH1, OH1MS	SATCO	8.64	6.59	4.73								
Notes: If no rate is identified in the contract, the rates, terms, and conditions for the specific service or function will be as set forth in applicable BellSouth tariff.																

LOCAL INTERCONNECTION - Tennessee														Attachment: 3		Exhibit: A	
CATEGORY	RATE ELEMENTS	Interim	Zone	BCS	USOC	RATES ($)					Svc Order Submitted Elec per LSR	Svc Order Submitted Manually per LSR	Incremental Charge - Manual Svc Order vs. Electronic-1st	Incremental Charge - Manual Svc Order vs. Electronic-Add'l	Incremental Charge - Manual Svc Order vs. Electronic-Disc 1st	Incremental Charge - Manual Svc Order vs. Electronic-Disc Add'l
						Rec	Nonrecurring		Nonrecurring Disconnect		OSS Rates ($)					
							First	Add'l	First	Add'l	SOMEC	SOMAN	SOMAN	SOMAN	SOMAN	SOMAN
LOCAL INTERCONNECTION (CALL TRANSPORT AND TERMINATION)																
NOTE: "bk" beside a rate indicates that the Parties have agreed to bill and keep for that element pursuant to the terms and conditions in Attachment 3.																
TANDEM SWITCHING																
	Tandem Switching Function Per MOU			OHD		0.0009778bk										
	Multiple Tandem Switching, per MOU (applies to intial tandem only)			OHD		0.0009778										
	Tandem Intermediary Charge, per MOU*			OHD		0.0015										
*** This charge is applicable only to transit traffic and is applied in addition to applicable switching and/or interconnection charges.**																
TRUNK CHARGE																
	Installation Trunk Side Service - per DS0			OHD	TPP++		21.59	8.09								
	Dedicated End Office Trunk Port Service-per DS0**			OHD	TDE0P	0.00										
	Dedicated End Office Trunk Port Service-per DS1**			0H1 OH1MS	TDE1P	0.00										
	Dedicated Tandem Trunk Port Service-per DS0**			OHD	TDW0P	0.00										
	Dedicated Tandem Trunk Port Service-per DS1**			OH1 OH1MS	TDW1P	0.00										
**** This rate element is recovered on a per MOU basis and is included in the End Office Switching and Tandem Switching, per MOU rate elements**																
COMMON TRANSPORT (Shared)																
	Common Transport - Per Mile, Per MOU			OHD		0.0000064bk										
	Common Transport - Facilities Termination Per MOU			OHD		0.0003871bk										
LOCAL INTERCONNECTION (DEDICATED TRANSPORT)																
INTEROFFICE CHANNEL - DEDICATED TRANSPORT																
	Interoffice Channel - Dedicated Transport - 2-Wire Voice Grade - Per Mile per month			OHL, OHM	1L5NF	0.0174										
	Interoffice Channel - Dedicated Transport- 2- Wire Voice Grade - Facility Termination per month			OHL, OHM	1L5NF	18.58	55.39	17.37	27.96	3.51						
	Interoffice Channel - Dedicated Transport - 56 kbps - per mile per month			OHL, OHM	1L5NK	0.0174										
	Interoffice Channel - Dedicated Transport - 56 kbps - Facility Termination per month			OHL, OHM	1L5NK	17.98	55.39	17.37	27.96	3.51						
	Interoffice Channel - Dedicated Transport - 64 kbps - per mile per month			OHL, OHM	1L5NK	0.0174										
	Interoffice Channel - Dedicated Transport - 64 kbps - Facility Termination per month			OHL, OHM	1L5NK	17.98	55.39	17.37	27.96	3.51						
	Interoffice Channel - Dedicated Channel - DS1 - Per Mile per month			OH1, OH1MS	1L5NL	0.3562										
	Interoffice Channel - Dedicated Tranport - DS1 - Facility Termination per month			OH1, OH1MS	1L5NL	77.86	112.40	76.27	19.55	14.99						
	Interoffice Channel - Dedicated Transport - DS3 - Per Mile per month			OH3, OH3MS	1L5NM	2.34										
	Interoffice Channel - Dedicated Transport - DS3 - Facility Termination per month			OH3, OH3MS	1L5NM	848.99	395.29	176.56	109.04	105.91						
LOCAL CHANNEL - DEDICATED TRANSPORT																
	Local Channel - Dedicated - 2-Wire Voice Grade per month			OHL, OHM	TEFV2	19.43	199.33	24.16	54.81	4.80						
	Local Channel - Dedicated - 4-Wire Voice Grade per month			OHL, OHM	TEFV4	20.56	201.53	24.83	55.52	5.51						
	Local Channel - Dedicated - DS1 per month			OH1	TEFHG	40.99	277.35	233.26	33.18	22.30						
	Local Channel - Dedicated - DS3 Facility Termination per month			OH3	TEFHJ	611.30	595.37	304.50	215.82	151.15						
LOCAL INTERCONNECTION MID-SPAN MEET																
NOTE: If Access service ride Mid-Span Meet, one-half the tariffed service Local Channel rate is applicable.																
	Local Channel - Dedicated - DS1 per month			OH1MS	TEFHG	0.00	0.00									
	Local Channel - Dedicated - DS3 per month			OH3MS	TEFHJ	0.00	0.00									
MULTIPLEXERS																
	Channelization - DS1 to DS0 Channel System			OH1, OH1MS	SATN1	80.77	141.87	77.11	44.47	42.62						
	DS3 to DS1 Channel System per month			OH3, OH3MS	SATNS	222.98	308.03	108.47	6.34	4.23						
	DS3 Interface Unit (DS1 COCI) per month			OH1, OH1MS	SATCO	17.58	6.07	4.66								
Notes: If no rate is identified in the contract, the rates, terms, and conditions for the specific service or function will be as set forth in applicable BellSouth tariff.																

Attachment 4

Physical Collocation

Version 1Q03: 02/28/03

BELLSOUTH

PHYSICAL COLLOCATION

1. Scope of Attachment

1.1 The rates, terms, and conditions contained within this Attachment shall only apply when DPI is physically collocated as a sole occupant or as a Host within a BellSouth Premises location pursuant to this Attachment. BellSouth Premises include BellSouth Central Offices and Serving Wire Centers (hereinafter "Premises"). This Attachment is applicable to Premises owned or leased by BellSouth. However, if the Premises occupied by BellSouth is leased by BellSouth from a third party, special considerations and intervals may apply in addition to the terms and conditions contained in this Attachment.

1.2 Right to Occupy. BellSouth shall offer to DPI collocation on rates, terms, and conditions that are just, reasonable, non-discriminatory and consistent with the rules of the FCC. Subject to the rates, terms and conditions of this Attachment, where space is available and it is technically feasible, BellSouth will allow DPI to occupy a certain area designated by BellSouth within a Premises, or on BellSouth property upon which the Premises is located, of a size which is specified by DPI and agreed to by BellSouth (hereinafter "Collocation Space"). The necessary rates, terms and conditions for h premises as defined by the FCC, other than BellSouth Premises, shall be negotiated upon reasonable request for collocation at such premises.

1.2.1 Neither BellSouth nor any of BellSouth's affiliates may reserve space for future use on more preferential terms than those set forth in this Attachment.

1.2.1.1 In all states other than Florida, the size specified by DPI may contemplate a request for space sufficient to accommodate DPI's growth within a twenty-four (24) month period.

1.2.1.2 In the state of Florida, the size specified by DPI may contemplate a request for space sufficient to accommodate DPI's growth within an eighteen (18) month period.

1.3 Space Allocation. BellSouth shall attempt to accommodate DPI's requested preferences, if any. In allocating Collocation Space, BellSouth shall not materially increase DPI's cost or materially delay DPI's occupation and use of the Collocation Space, assign Collocation Space that will impair the quality of service or otherwise limit the service DPI wishes to offer, reduce unreasonably the total space available for physical collocation or preclude unreasonable physical collocation within the Premises. Space shall not be available for collocation if it is: (a) physically occupied by non-obsolete equipment; (b) assigned to another collocated telecommunications carrier; (c) used to provide physical access to occupied space; (d) used to enable technicians to work on equipment located within occupied space; (e) properly reserved for future use, either by BellSouth or another collocated telecommunications carrier; or (f)

essential for the administration and proper functioning of Premises. BellSouth may segregate Collocation Space and require separate entrances for collocated telecommunications carriers to access their Collocation Space, pursuant to FCC Rules.

1.4 Space Reclamation. In the event of space exhaust within a Premises, BellSouth may include in its documentation for the Petition for Waiver filed with the Commission, any unutilized space in the Premises. DPI will be responsible for the justification of unutilized space within its Collocation Space, if the Commission requires such justification.

1.5 Use of Space. DPI shall use the Collocation Space for the purposes of installing, maintaining and operating DPI's equipment (to include testing and monitoring equipment) necessary for interconnection with BellSouth services and facilities or for accessing BellSouth unbundled network elements for the provision of telecommunications services, as specifically set forth in this Agreement. The Collocation Space assigned to DPI may not be used for any purposes other than as specifically described herein or in any amendment hereto.

1.6 Rates and Charges. DPI agrees to pay the rates and charges identified in Exhibit B attached hereto.

1.7 If any due date contained in this Attachment falls on a weekend or National holiday, the due date will be the next business day thereafter. For intervals of ten (10) calendar days or less, National holidays will be excluded.

1.8 The Parties agree to comply with all applicable federal, state, county, local and administrative laws, rules, ordinances, regulations and codes in the performance of their obligations hereunder.

2. Space Availability Report

2.1 Space Availability Report. Upon request from DPI and at the DPI's expense, BellSouth will provide a written report (Space Availability Report) describing in detail the space that is available for collocation at a particular Premises. This report will include the amount of Collocation Space available at the Premises requested, the number of collocators present at the Premises, any modifications in the use of the space since the last report on the Premises requested and the measures BellSouth is taking to make additional space available for collocation arrangements. A Space Availability Report does not reserve space at the Premises for which the Space Availability Report was requested by DPI.

2.1.1 The request from DPI for a Space Availability Report must be in writing and include the Premises street address, as identified in the Local Exchange Routing Guide (LERG) and Common Language Location Identification (CLLI) code of the Premises. CLLI code information is located in the National Exchange Carrier Association (NECA) Tariff FCC No. 4.

2.1.2 BellSouth will respond to a request for a Space Availability Report for a particular Premises within ten (10) calendar days of the receipt of such a request. BellSouth will make its best efforts to respond in ten (10) calendar days to a Space Availability Report request when the request includes from two (2) to five (5) Premises within the same state. The response time for Space Availability Report requests of more than five (5) Premises shall be negotiated between the Parties. If BellSouth cannot meet the ten (10) calendar day response time, BellSouth shall notify DPI and inform DPI of the timeframe under which it can respond.

3. Collocation Options

3.1 Cageless. BellSouth shall allow DPI to collocate DPI's equipment and facilities without requiring the construction of a cage or similar structure. BellSouth shall allow DPI to have direct access to DPI's equipment and facilities in accordance with Section 5.9. BellSouth shall make cageless collocation available in single bay increments. Except where DPI's equipment requires special technical considerations (e.g., special cable racking or isolated ground plane), BellSouth shall assign cageless Collocation Space in conventional equipment rack lineups where feasible. For equipment requiring special technical considerations, DPI must provide the equipment layout, including spatial dimensions for such equipment pursuant to generic requirements contained in Telcordia GR-63-Core, and shall be responsible for compliance with all special technical requirements associated with such equipment.

3.2 Caged. At DPI's expense, DPI will arrange with a Supplier certified by BellSouth (BellSouth Certified Supplier) to construct a collocation arrangement enclosure in accordance with BellSouth's Technical References (TRs) (Specifications) prior to starting equipment installation. BellSouth will provide Specifications upon request. Where local building codes require enclosure specifications more stringent than BellSouth's enclosure Specifications, DPI and DPI's BellSouth Certified Supplier must comply with the more stringent local building code requirements. DPI's BellSouth Certified Supplier shall be responsible for filing and receiving any and all necessary permits and/or licenses for such construction. BellSouth shall cooperate with DPI and provide, at DPI's expense, the documentation, including existing building architectural drawings, enclosure drawings, and Specifications required and necessary for DPI's BellSouth Certified Supplier to obtain the zoning, permits and/or other licenses. DPI's BellSouth Certified Supplier shall bill DPI directly for all work performed for DPI pursuant to this Attachment. BellSouth shall have no liability for, nor responsibility to pay, such charges imposed by DPI's BellSouth Certified Supplier. DPI must provide the local BellSouth Central Office building contact with two Access Keys that will allow entry into the locked enclosure. Except in the case of an emergency, BellSouth will not access DPI's locked enclosure prior to notifying DPI at least forty-eight (48) hours or two (2) business days, whichever is greater, before access to the Collocation Space is required. Upon request, BellSouth shall construct the enclosure for DPI.

3.2.1 BellSouth may elect to review DPI's plans and specifications prior to allowing construction to start, to ensure compliance with BellSouth's Specifications. BellSouth will notify DPI of its desire to execute this review in BellSouth's response to the Initial Application, if DPI has indicated its desire to construct its own enclosure. If DPI's Initial Application does not indicate its desire to construct its own enclosure, but its subsequent firm order does indicate its desire to construct its own enclosure, then notification to review will be given within ten (10) calendar days after the Firm Order date. BellSouth shall complete its review within fifteen (15) calendar days after the receipt of DPI's plans and specifications. Regardless of whether or not BellSouth elects to review DPI's plans and specifications, BellSouth reserves the right to inspect the enclosure after construction has been completed to ensure that it is constructed according to DPI's submitted plans and specifications and/or BellSouth's Specifications, as applicable. If BellSouth decides to inspect the constructed Collocation Space, BellSouth will complete its inspection within fifteen (15) calendar days after receipt of written notification of completion of the enclosure from DPI. BellSouth shall require DPI to remove or correct within seven (7) calendar days, at DPI's expense, any structure that does not meet DPI's plans and specifications or BellSouth's Specifications, if applicable.

3.3 Shared Caged Collocation. DPI may allow other telecommunications carriers to share DPI's caged collocation arrangement, pursuant to the terms and conditions agreed to by DPI (Host) and the other telecommunications carriers (Guests) pursuant to this Section, except where the Premises is located within a leased space and BellSouth is prohibited by said lease from offering such an option to DPI. BellSouth shall be notified in writing by DPI upon the execution of any agreement between the Host and its Guest(s) within ten (10) calendar days of its execution and prior to the submission of any Firm Orders. Further, such notification shall include the name of the Guest(s), the term of the agreement, and a certification by DPI that said agreement imposes upon the Guest(s) the same terms and conditions for Collocation Space as set forth in this Attachment between BellSouth and DPI.

3.3.1 DPI, as the Host, shall be the sole interface and responsible Party to BellSouth for the assessment and billing of rates and charges contained within this Attachment and for the purposes of ensuring that the safety and security requirements of this Attachment are fully complied with by the Guest(s), its employees and agents. BellSouth shall provide DPI with a proration of the costs of the Collocation Space based on the number of collocators and the space used by each, with a minimum charge of one (1) bay/rack per Host/Guest. In all states other than Florida, and in addition to the above, DPI shall be the responsible party to BellSouth for the purpose of submitting applications for initial and additional equipment placement for the Guest(s). In Florida, the Guest(s) may submit its own initial and additional equipment placement applications using the Host's Access Carrier Name Abbreviation (ACNA). A separate Guest application shall result in the assessment of an Initial Application Fee or a Subsequent Application Fee, as set forth in Exhibit B, which will be billed to the Host

on the date that BellSouth provides its written response to the Guest(s) Bona Fide Application (Application Response).

3.3.2 Notwithstanding the foregoing, the Guest(s) may submit service orders directly to BellSouth to request the provisioning of interconnecting facilities between BellSouth and the Guest(s), the provisioning of services, and access to unbundled network elements. The bill for these interconnecting facilities, services and access to UNEs will be charged to the Guest(s) pursuant to the applicable Tariff or the Guest's Interconnection Agreement with BellSouth.

3.3.3 DPI shall indemnify and hold harmless BellSouth from any and all claims, actions, causes of action, of whatever kind or nature arising out of the presence of DPI's Guest(s) in the Collocation Space, except to the extent caused by BellSouth's sole negligence, gross negligence, or willful misconduct.

3.4 Adjacent Collocation. Subject to technical feasibility and space availability, BellSouth will permit an adjacent collocation arrangement (Adjacent Arrangement) on Premises' property only when space within the Premises is legitimately exhausted and where the Adjacent Arrangement does not interfere with access to existing or planned structures or facilities on the Premises' property. An Adjacent Arrangement shall be constructed or procured by DPI and must be in conformance with BellSouth's design and construction Specifications. Further, DPI shall construct, procure, maintain and operate said Adjacent Arrangement(s) pursuant to all of the rates, terms and conditions set forth in this Attachment.

3.4.1 If DPI requests Adjacent Collocation, pursuant to the conditions stated in 3.4 above, DPI must arrange with a BellSouth Certified Supplier to construct the Adjacent Arrangement structure in accordance with BellSouth's Specifications. BellSouth will provide Specifications upon request. Where local building codes require enclosure specifications more stringent than BellSouth's Specifications, DPI and DPI's BellSouth Certified Supplier must comply with the more stringent local building code requirements. DPI's BellSouth Certified Supplier shall be responsible for filing and receiving any and all necessary zoning, permits and/or licenses for such construction. DPI's BellSouth Certified Supplier shall bill DPI directly for all work performed for DPI pursuant to this Attachment. BellSouth shall have no liability for, nor responsibility to pay, such charges imposed by DPI's BellSouth Certified Supplier. DPI must provide the local BellSouth Central Office building contact with two cards, keys or other access devices used to gain entry into the locked enclosure. Except in the case of an emergency, BellSouth will not access DPI's locked enclosure prior to notifying DPI at least forty-eight (48) hours or two (2) business days, whichever is greater, before access to the Collocation Space is required.

3.4.2 DPI must submit its Adjacent Arrangement construction plans and specifications to BellSouth when it places its Firm Order. BellSouth shall review DPI's plans and specifications prior to construction of an Adjacent Arrangement(s) to ensure DPI's compliance with BellSouth's Specifications. BellSouth shall complete its review

within fifteen (15) calendar days after receipt of the plans and specifications from DPI for the Adjacent Arrangement. BellSouth may inspect the Adjacent Arrangement during and after construction is completed to ensure that it is constructed according to DPI's submitted plans and specifications. If BellSouth decides to inspect the completed Adjacent Arrangement, BellSouth will complete its inspection within fifteen (15) calendar days after receipt of written notification of completion of the enclosure from DPI. BellSouth shall require DPI to remove or correct within seven (7) calendar days at DPI's expense, any structure that does not meet its submitted plans and specifications or BellSouth's Specifications, if applicable.

3.4.3 DPI shall provide a concrete pad, the structure housing the arrangement, heating/ventilation/air conditioning (HVAC), lighting, and all of the facilities that are required to connect the structure (i.e., racking, conduits, etc.) to the BellSouth point of demarcation. At DPI's option, and where the local authority having jurisdiction permits, BellSouth shall provide an AC power source and access to physical collocation services and facilities, subject to the same nondiscriminatory requirements as those applicable to any other physical collocation arrangement. In Alabama and Louisiana, BellSouth will provide DC power to Adjacent Collocation sites where technically feasible, as that term has been defined by the FCC subject to individual case basis pricing. DPI's BellSouth Certified Supplier shall be responsible, at DPI's sole expense, for filing and receiving any and all necessary zoning, permits and/or licenses for an Adjacent Arrangement. BellSouth shall allow Shared Caged Collocation within an Adjacent Arrangement, pursuant to the terms and conditions set forth in 3.3 above.

3.5 Co-Carrier Cross Connect (CCXC). The primary purpose of collocation is for a telecommunications carrier to interconnect with BellSouth's network or to access BellSouth's unbundled network elements for the provision of telecommunications services. BellSouth will permit DPI to interconnect between its virtual or physical collocation arrangements and those of another collocated telecommunications carrier within the same Premises. Both DPI's agreement and the other collocated telecommunications carrier's agreement must contain rates, terms and conditions for CCXC language. DPI is prohibited from using the Collocation Space for the sole or primary purpose of cross connecting to other collocated telecommunications carriers.

3.5.1 DPI must contract with a BellSouth Certified Supplier to place the CCXC. The CCXC shall be provisioned through facilities owned by DPI. Such connections to other collocated telecommunications carriers may be made using either optical or electrical facilities. In cases where DPI's equipment and the equipment of the other collocated telecommunications carrier are located in contiguous caged Collocation Spaces, DPI may use its own technicians to install co-carrier cross connects using either electrical or optical facilities between the equipment of both collocated telecommunications carriers and construct a dedicated cable support structure between the two contiguous cages. DPI shall deploy such optical or electrical connections directly between its own facilities and the facilities of another collocated telecommunications carrier without being routed through BellSouth's equipment. DPI shall not provision CCXC on any BellSouth distribution frame, POT (Point of

Termination) Bay, DSX (Digital System Cross-connect) or LGX (Light Guide Cross-connect). DPI is responsible for ensuring the integrity of the signal.

3.5.2 DPI shall be responsible for providing a letter of authorization (LOA), with the application, to BellSouth from the other collocated telecommunications carrier to which it will be cross-connecting DPI-provisioned CCXC shall utilize common cable support structure. There will be a recurring charge per linear foot, per cable, of common cable support structure used. In the case of two contiguous caged collocation arrangements, DPI may use its own technicians to construct the dedicated support structure between the two collocation arrangements.

3.5.3 To order CCXCs, DPI must submit an Initial Application or Subsequent Application to BellSouth. If no modification to the Collocation Space is requested other than the placement of CCXCs, the Subsequent Application Fee for CCXCs, as defined in Exhibit B, will apply. If modifications, in addition to the placement of CCXCs, are requested, the Initial Application or Subsequent Application Fee will apply. BellSouth will bill this nonrecurring fee on the date that it provides an Application Response to DPI.

4. Occupancy

4.1 Occupancy. BellSouth will notify DPI in writing when the Collocation Space is ready for occupancy (Space Ready Date). DPI will schedule and complete an acceptance walkthrough of the Collocation Space with BellSouth within fifteen (15) calendar days of the Space Ready Date. BellSouth will correct any deviations in DPI's original or jointly amended application requirements within seven (7) calendar days after the walkthrough, unless the Parties jointly agree upon a different time frame. BellSouth will also establish a new Space Ready Date. Another acceptance walkthrough will then be scheduled and conducted within fifteen (15) calendar days of the new Space Ready Date. This follow-up acceptance walkthrough will be limited to only those items identified in the initial walkthrough. If DPI completes its acceptance walkthrough within the fifteen (15) calendar day interval, billing will begin upon the date of DPI's acceptance of the Collocation Space (Space Acceptance Date). In the event that DPI fails to complete an acceptance walkthrough within this fifteen (15) calendar day interval, the Collocation Space shall be deemed accepted by DPI on the Space Ready Date and billing will commence from that date. If DPI decides to occupy the space prior to the Space Ready Date, the date DPI occupies the space becomes the new Space Acceptance Date and billing will begin from that date. DPI must notify BellSouth in writing that collocation equipment installation is complete and operational with BellSouth's network. BellSouth may, at its discretion, refuse to accept orders for cross connects until it has received such notice. For the purposes of this paragraph, DPI's telecommunications equipment will be deemed operational when it has been cross-connected to BellSouth's network for the purpose of provisioning telecommunication services to its customers.

4.2 Termination of Occupancy. In addition to any other provisions addressing termination of occupancy in this Agreement, DPI may terminate occupancy in a particular Collocation Space by submitting a Subsequent Application requesting termination of occupancy. Such termination shall be effective upon BellSouth's acceptance of the Space Relinquishment Form. Billing for monthly recurring charges will cease on the date that DPI and BellSouth conduct an inspection of the terminated space and jointly sign off on the Space Relinquishment Form or on the date that DPI signs off on the Space Relinquishment Form and sends this form to BellSouth, if a subsequent inspection of the terminated space by BellSouth reveals no discrepancies. If the subsequent inspection by BellSouth does reveal discrepancies, billing will cease on the date that BellSouth and DPI jointly conduct an inspection, which confirms that DPI has corrected all of the noted discrepancies. A Subsequent Application Fee will not apply for the termination of occupancy. BellSouth may terminate DPI's right to occupy the Collocation Space in the event that DPI fails to comply with any provision of this Agreement, including the payment of the applicable fees.

4.2.1 Upon termination of occupancy, DPI, at its sole expense, shall remove its equipment and any other property from the Collocation Space. DPI shall have thirty (30) calendar days from the Bona Fide Firm Order (BFFO) Subsequent Application date (Termination Date) to complete such removal, including the removal of all equipment and facilities of DPI's Guest(s), unless DPI's Guest(s) has assumed responsibility for the Collocation Space housing the Guest(s)'s equipment and executed the appropriate documentation required by BellSouth prior to the DPI removal date. DPI shall continue the payment of all monthly fees to BellSouth until the date thatDPI, and if applicable DPI's Guest(s), has fully vacated the Collocation Space and the Space Relinquishment Form has been accepted by BellSouth. Should DPI or DPI's Guest(s) fail to vacate the Collocation Space within thirty (30) calendar days from the Termination Date, BellSouth shall have the right to remove the equipment and dispose of the equipment and other property of DPI or DPI's Guest(s), in any manner that BellSouth deems fit, at DPI's expense and with no liability whatsoever for DPI's property or DPI's Guest(s)'s property. Upon termination of DPI's right to occupy specific Collocation Space, the Collocation Space will revert back to BellSouth's space inventory, and DPI shall surrender the Collocation Space to BellSouth in the same condition as when it was first occupied by DPI, with the exception of ordinary wear and tear, unless otherwise agreed to by the Parties. DPI's BellSouth Certified Supplier shall be responsible for updating and making any necessary changes to BellSouth's records as required by BellSouth's Specifications including, but not limited to, Central Office Record Drawings and ERMA Records. DPI shall be responsible for the cost of removing any DPI constructed enclosure, together with any supporting structures (e.g., racking, conduits, or power cables), at the termination of occupancy and restoring the grounds to their original condition.

5. Use of Collocation Space

5.1 Equipment Type. BellSouth permits the collocation of any equipment necessary for interconnection to BellSouth's network or access to BellSouth's unbundled network elements in the provision of telecommunications services, as the term "necessary" is defined by FCC 47 C.F.R. Section 51.323 (b). The primary purpose and function of any equipment collocated in a Premises must be for interconnection to BellSouth's network or access to BellSouth's unbundled network elements in the provision of telecommunications services.

5.1.1 Examples of equipment that would not be considered necessary include, but are not limited to: traditional circuit switching equipment, equipment used exclusively for call-related databases, computer servers used exclusively for providing information services, operations support system (OSS) equipment used to support collocated telecommunications carrier network operations, equipment that generates customer orders, manages trouble tickets or inventory, or stores customer records in centralized databases, etc. BellSouth will determine upon receipt of an application if the requested equipment is necessary based on the criteria established by the FCC. Multifunctional equipment placed on Premises must not place any greater relative burden on BellSouth's property than comparable single-function equipment. BellSouth reserves the right to permit collocation of any equipment on a nondiscriminatory basis.

5.1.2 Such equipment must, at a minimum, meet the following Telcordia Network Equipment Building Systems (NEBS) General Equipment Requirements: Criteria Level 1 requirements as outlined in Telcordia Special Report SR-3580, Issue 1. Except where otherwise required by a Commission, BellSouth shall comply with the applicable FCC rules relating to denial of collocation based on DPI's failure to comply with this Section.

5.1.3 DPI shall not request more DS0, DS1, DS3 and optical terminations for a collocation arrangement than the total port or termination capacity of the equipment physically installed in the arrangement. The total capacity of the equipment collocated in the arrangement will include equipment contained in an application, as well as equipment already placed in the collocation arrangement. If full network termination capacity of the equipment being installed is not requested in the application, additional network terminations for the installed equipment will require the submission of another application. In the event DPI submits an application for terminations that will exceed the total capacity of the collocated equipment, DPI will be informed of the discrepancy by BellSouth and required to submit a revision to the application.

5.2 DPI shall notify BellSouth whenever DPI submits a Method of Procedure (MOP) adding equipment to DPI's Collocation Space and shall provide to BellSouth a list of all UCC-1 lien holders or other entities that have a financial interest, secured or otherwise, in the equipment in DPI's Collocation Space. DPI shall submit a list of any lien holders or other entities that have a financial interest in the equipment that is collocated by DPI to its RCM Representative.

5.3 DPI shall not use the Collocation Space for marketing purposes, nor shall it place any identifying signs or markings outside the Collocation Space or on the grounds of the Premises.

5.4 DPI shall place a plaque or affix other identification (e.g., stenciling) to DPI's equipment, in order for BellSouth to identify DPI's equipment, including a list of emergency contacts with telephone numbers.

5.5 Entrance Facilities. DPI may elect to place DPI-owned or DPI-leased fiber entrance facilities into its Collocation Space. BellSouth will designate the point of interconnection in close proximity to the Premises building housing the Collocation Space, such as at an entrance manhole or a cable vault, which are physically accessible by both Parties. DPI will provide and place fiber cable at the point of entrance of sufficient length to be pulled through conduit and into the splice location. DPI will provide and install a sufficient length of fire retardant riser cable, to which the entrance cable will be spliced by BellSouth. The fire retardant riser cable will extend from the splice location to DPI's equipment in the Collocation Space. In the event DPI utilizes a non-metallic, riser-type entrance facility, a splice will not be required. DPI must contact BellSouth for instructions prior to placing any entrance facility cable in the manhole. DPI is responsible for maintenance of the entrance facilities. At DPI's option, BellSouth will accommodate, where technically feasible, a microwave entrance facility, pursuant to separately negotiated terms and conditions. In the case of adjacent collocation, copper facilities may be used between the adjacent collocation arrangement and the central office demarcation point unless BellSouth determines that limited space is available for the placement of entrance facilities.

5.5.1 Dual Entrance Facilities. BellSouth will provide at least two interconnection points at each Premise where at least two such interconnection points are available and capacity exists. Upon receipt of a request by DPI for dual entrance facilities to its physical Collocation Space, BellSouth shall provide DPI with information regarding BellSouth's capacity to accommodate the requested dual entrance facilities. If conduit in the serving manhole(s) is available and is not reserved for another purpose or for utilization within twelve (12) months of the receipt of an application for collocation, BellSouth will make the requested conduit space available for installing a second entrance facility to DPI's arrangement. The location of the serving manhole(s) will be determined at the sole discretion of BellSouth. Where dual entrance facilities are not available due to lack of capacity, BellSouth will provide this information to DPI in the Application Response.

5.5.2 Shared Use. DPI may utilize spare capacity on an existing interconnector's entrance facility for the purpose of providing an entrance facility to DPI's collocation arrangement within the same Premises. BellSouth shall allow the splice, as long as the fiber is non-working fiber. DPI must arrange with BellSouth in accordance with BellSouth's Special Construction Procedures, RL93-11-030BT, and provide a LOA from the other telecommunications carrier for BellSouth to perform the splice of the DPI provided riser cable to the spare capacity on the entrance facility. If DPI desires

to allow another telecommunications carrier to use its entrance facilities, that telecommunications carrier must arrange with BellSouth in accordance with BellSouth's Special Construction Procedures, RL93-11-030BT, and provide a LOA from DPI for BellSouth to perform the splice of that telecommunications carrier's provided riser cable to the spare capacity on DPI's entrance facility.

5.6 Demarcation Point. BellSouth will designate the point(s) of demarcation between DPI's equipment and/or network and BellSouth's network. Each Party will be responsible for the maintenance and operation of all equipment/facilities on its side of the demarcation point. For 2-wire and 4-wire connections to BellSouth's network, the demarcation point shall be a common block on the BellSouth designated conventional distributing frame (CDF). DPI shall be responsible for providing, and DPI's BellSouth Certified Supplier shall be responsible for installing and properly labeling/stenciling the common block and any necessary cabling identified in Section 7 of this Attachment. For all other terminations, BellSouth shall designate a demarcation point on a per arrangement basis. DPI or its agent must perform all required maintenance to the equipment/facilities on its side of the demarcation point, pursuant to Section 5.7, following, and may self-provision cross-connects that may be required within the Collocation Space to activate service requests.

5.6.1 In Tennessee, BellSouth will designate the point(s) of demarcation between DPI's equipment and/or network and BellSouth's network. Each Party will be responsible for the maintenance and operation of all equipment/facilities on its side of the demarcation point. For connections to BellSouth's network, the demarcation point shall be a DPI-provided Point of Termination Bay (POT Bay) in a common area within the Premises. DPI shall be responsible for providing, and DPI's BellSouth Certified Supplier shall be responsible for installing and properly labeling/stenciling the POT Bay, as well as installing the necessary cabling between DPI's Collocation Space and the demarcation point. DPI or its agent must perform all required maintenance to equipment/facilities on its side of the demarcation point, pursuant to Section 5.7, following, and may self-provision cross-connects that may be required within the Collocation Space to activate service requests. BellSouth will negotiate alternative rates, terms and conditions related to the demarcation point in Tennessee, in the event that DPI desires to avoid the use of an intermediary device as contemplated by the Tennessee Regulatory Authority.

5.7 DPI's Equipment and Facilities. DPI, or if required by this Attachment, DPI's BellSouth Certified Supplier, is solely responsible for the design, engineering, installation, testing, provisioning, performance, monitoring, maintenance and repair of the equipment and facilities used by DPI which must be performed in compliance with all applicable BellSouth Specifications. Such equipment and facilities may include, but are not limited to, cable(s), equipment, and point of termination connections. DPI and its selected BellSouth Certified Supplier must follow and comply with all BellSouth requirements outlined in BellSouth's TR 73503, TR 73519, TR 73572, and TR 73564.

5.8 BellSouth's Access to Collocation Space. From time to time, BellSouth may require access to the Collocation Space. BellSouth retains the right to access DPI's space for the purpose of making BellSouth equipment and building modifications (e.g., running, altering or removing racking, ducts, electrical wiring, HVAC, and cabling). BellSouth will give notice to DPI at least forty-eight (48) hours before access to the Collocation Space is required. DPI may elect to be present whenever BellSouth performs work in the Collocation Space. The Parties agree that DPI will not bear any of the expense associated with this type of work.

5.9 Access. Pursuant to Section 12, DPI shall have access to its Collocation Space twenty-four (24) hours a day, seven (7) days a week. DPI agrees to provide the name and social security number, date of birth, or driver's license number of each employee, supplier, or agent of DPI or DPI's Guests that will be provided with access keys or cards (Access Keys) prior to the issuance of said Access Keys, using form RF-2906-C, the "CLEC and CLEC Certified Supplier Access Request and Acknowledgement" form. Key acknowledgement forms, the "Collocation Acknowledgement Sheet" for access cards and the "Key Acknowledgement Form" for keys must be signed by DPI and returned to BellSouth Access Management within fifteen (15) calendar days of DPI's receipt. Failure to return these properly acknowledged forms will result in the holding of subsequent access key or card requests until the proper acknowledgement documents have been received by BellSouth and reflect current information. Access Keys may not be duplicated under any circumstances. DPI agrees to be responsible for all Access Keys and for the return of all Access Keys in the possession of DPI's employees, suppliers, Guests, or agents after termination of the employment relationship, the contractual obligation with DPI ends, upon the termination of this Attachment, or upon the termination of occupancy of an individual collocation arrangement.

5.9.1 BellSouth will permit one accompanied site visit to DPI's designated collocation arrangement location, after receipt of the BFFO without charge to DPI. DPI must submit to BellSouth the completed Access Control Request Form for all employees or agents requiring access to the Premises within a minimum of thirty (30) calendar days prior to the date DPI desires access to the Collocation Space. In order to permit reasonable access during construction of the Collocation Space, DPI may submit a request for its one accompanied site visit to its designated collocation arrangement location at any time subsequent to BellSouth's receipt of the BFFO. In the event DPI desires access to the Collocation Space after submitting such a request, but prior to the approval of its access request, in addition to the first accompanied free visit, BellSouth shall permit DPI to access the Collocation Space accompanied by a security escort, at DPI's expense. DPI must request escorted access to its designated collocation arrangement location at least three (3) business days prior to the date such access is desired.

5.10 Lost or Stolen Access Keys. DPI shall notify BellSouth in writing immediately in the case of lost or stolen Access Keys. If it becomes necessary for BellSouth to re-key buildings or deactivate a card as a result of a lost Access Key(s) or for failure to return

an Access Key(s), DPI shall pay for all reasonable costs associated with the re-keying or deactivating the card.

5.11 Interference or Impairment. Notwithstanding any other provisions of this Attachment, DPI shall not use any product or service provided under this Agreement, any other service related thereto or used in combination therewith, or place or use any equipment or facilities in any manner that 1) significantly degrades, interferes with or impairs service provided by BellSouth or by any other entity or any person's use of its telecommunications services; 2) endangers or damages the equipment, facilities or any other property of BellSouth or of any other entity or person; 3) compromises the privacy of any communications; or 4) creates an unreasonable risk of injury or death to any individual or to the public. If BellSouth reasonably determines that any equipment or facilities of DPI violates the provisions of this paragraph, BellSouth shall provide written notice to DPI, which shall direct DPI to cure the violation within forty-eight (48) hours of DPI's actual receipt of written notice or, at a minimum, to commence curative measures within twenty-four (24) hours and to exercise reasonable diligence to complete such measures as soon as possible thereafter. After receipt of the notice, the Parties agree to consult immediately and, if necessary, to conduct an inspection of the arrangement.

5.11.1 Except in the case of the deployment of an advanced service which significantly degrades the performance of other advanced services or traditional voice band services, if DPI fails to take curative action within forty-eight (48) hours or if the violation is of a character that poses an immediate and substantial threat of damage to property or injury or death to any person, or any other significant degradation, interference or impairment of BellSouth's or another entity's service, then and only in that event, BellSouth may take such action as it deems appropriate to correct the violation, including, without limitation, the interruption of electrical power to DPI's equipment. BellSouth will endeavor, but is not required, to provide notice to DPI prior to the taking of such action and BellSouth shall have no liability to DPI for any damages arising from such action, except to the extent that such action by BellSouth constitutes willful misconduct.

5.11.2 For purposes of this Section, the term "significantly degrades" shall be defined as an action that noticeably impairs a service from a user's perspective. In the case of the deployment of an advanced service which significantly degrades the performance of other advanced services or traditional voice band services and DPI fails to take curative action within forty-eight (48) hours, then BellSouth will establish before the Commission that the technology deployment is causing the significant degradation. Any claims of network harm presented to DPI or, if subsequently necessary, the Commission must be supported by BellSouth with specific and verifiable information. When BellSouth demonstrates that a certain technology deployed by DPI is significantly degrading the performance of other advanced services or traditional voice band services, DPI shall discontinue deployment of that technology and migrate its customers to technologies that will not significantly degrade the performance of other such services. Where the only degraded service itself is a known disturber, and the

newly deployed technology satisfies at least one of the criteria for a presumption that it is acceptable for deployment under Section 47 C.F.R. 51.230, the degraded service shall not prevail against the newly-deployed technology

5.12 Personalty and its Removal. Facilities and equipment placed by DPI in the Collocation Space shall not become a part of the Collocation Space, even if nailed, screwed or otherwise fastened to the Collocation Space, but shall retain their status as personal property and may be removed by DPI at any time. Any damage caused to the Collocation Space by DPI's employees, suppliers, agents or representatives during the removal of such property shall be promptly repaired by DPI at its sole expense. If DPI decides to remove equipment from its Collocation Space and the removal requires no physical change, BellSouth will bill DPI a Supplemental Application Fee (Administrative Only Application Fee) as set forth in Exhibit B. This non-recurring fee will be billed on the date that BellSouth provides an Application Response.

5.13 Alterations. Under no condition shall DPI or any person acting on behalf of DPI make any rearrangement, modification, augment, improvement, addition, and/or other alteration which could affect in any way space, power, HVAC, and/or safety considerations to the Collocation Space or the Premises, hereinafter referred to individually or collectively as "Augments", without the express written consent of BellSouth, which shall not be unreasonably withheld. The cost of any such Augment shall be paid by DPI. Any such Augment shall require an application and will result in the assessment of an application fee, which will be billed by BellSouth on the date that BellSouth provides DPI with an Application Response.

5.14 Janitorial Service. DPI shall be responsible for the general upkeep of its Collocation Space. DPI shall arrange directly with a BellSouth Certified Supplier for janitorial services applicable to Caged Collocation Space. BellSouth shall provide a list of such suppliers on a site-specific basis, upon request.

6. Ordering and Preparation of Collocation Space

6.1 If any state or federal regulatory agency imposes procedures or intervals applicable to DPI and BellSouth that are different from the procedures or intervals set forth in this Section, whether now in effect or that become effective after execution of this Agreement, those procedures or intervals shall supersede the requirements set forth herein for that jurisdiction for all applications that are submitted for the first time after the effective date thereof.

6.2 Initial Application. For DPI or DPI's Guest(s) initial equipment placement, DPI shall submit to BellSouth a Physical Expanded Interconnection Application Document (Initial Application). The Initial Application is considered Bona Fide when it is complete and accurate, meaning that all of the required fields on the application are completed with the appropriate type of information. An application fee will apply to

each application submitted by DPI, which will be billed by BellSouth on the date that BellSouth provides DPI with an Application Response.

6.3 Subsequent Application. In the event DPI or DPI's Guest(s) desires to modify the use of the Collocation Space after a BFFO, DPI shall complete an application that contains all of the detailed information associated with an Augment **to** the Collocation Space, as defined in Section 5.13 of this Attachment (Subsequent Application). The Subsequent Application is considered Bona Fide when it is complete and accurate, meaning that all of the required fields on the Subsequent Application are completed with the appropriate type of information associated with the Augment. BellSouth shall determine what modifications, if any, to the Premises are required to accommodate the change requested by DPI in the application. Such modifications to the Premises may include, but are not limited to: floor loading changes, changes necessary to meet HVAC requirements, changes to power plant requirements, equipment additions, etc.

6.3.1 Subsequent Application Fee. The application fee paid by DPI for its request for an Augment shall be dependent upon the level of assessment needed for the Augment requested. Where the Subsequent Application does not require assessment for provisioning or construction work but requires administrative costs by BellSouth, a Subsequent Application Fee (Administrative Only Application Fee) will be required as set forth in Exhibit B. This Administrative Only Application Fee will be applicable in instances such as Transfer of Ownership of the Collocation Space, Removal of Equipment from the Collocation Space, modification to an application prior to BFFO and V-to-P Conversion (In Place). The fee for a Subsequent Application where the Augment requested has limited effect (e.g., requires limited assessment but no capital expenditure by BellSouth as sufficient cable support structure, HVAC, power and terminations are available) shall be the Subsequent Application Fee as set forth in Exhibit B. If the modification requires capital expenditure, an Initial Application Fee shall apply. This nonrecurring fee will be billed on the date that BellSouth provides DPI with an Application Response.

6.4 Space Preferences. If DPI has previously requested and received a Space Availability Report for the Premises, DPI may submit up to three (3) space preferences on its application by identifying the specific space identification numbers referenced on the Space Availability Report for the space it is requesting. In the event BellSouth cannot accommodate the DPI's preference(s), DPI may accept the space allocated by BellSouth or cancel its application and submit another application requesting additional space preferences for the same central office. This application will be treated as a new application and an application fee will apply. The application fee will be billed by BellSouth on the date that BellSouth provides DPI with an Application Response.

6.5 Space Availability Notification.

6.5.1 Unless otherwise specified, BellSouth will respond to an application within ten (10) calendar days as to whether space is available or not available within a requested

Premises. BellSouth will also respond as to whether the application is Bona Fide and if it is not Bona Fide, the items necessary to cause the application to become Bona Fide. If the amount of space requested is not available, BellSouth will notify DPI of the amount of space that is available and no application fee will apply. When BellSouth's response includes an amount of space less than that requested by DPI or space that is configured differently, no application fee will apply. If DPI decides to accept the available space, DPI must resubmit its application to reflect the actual space available, including the configuration of the space, prior to submitting a BFFO. When DPI resubmits its application, BellSouth will bill DPI the appropriate application fee.

6.5.2 BellSouth will respond to a Florida application within fifteen (15) calendar days as to whether space is available or not available within a Premises. BellSouth will also respond as to whether the application is Bona Fide and if it is not Bona Fide, the items necessary to cause the application to become Bona Fide. If a lesser amount of space than requested is available, BellSouth will provide an Application Response for the amount of space that is available and bill DPI an appropriate application fee on the date that BellSouth provides the Application Response. When BellSouth's Application Response includes an amount of space less than that requested by DPI or space that is configured differently, if DPI decides to accept the available space, DPI must amend its application to reflect the actual space available, including the configuration of the space, prior to submitting a BFFO.

6.5.3 BellSouth will respond to a Louisiana application within ten (10) calendar days in regard to space availability for one (1) to ten (10) applications; fifteen (15) calendar days for eleven (11) to twenty (20) applications; and for more than twenty (20) applications, the response interval is increased by five (5) calendar days for every five additional applications received within five (5) business days. BellSouth will also respond as to whether the application is Bona Fide and if it is not Bona Fide, the items necessary to cause the application to become Bona Fide. If the amount of space requested is not available, BellSouth will notify DPI of the amount of space that is available and no application fee will apply. When BellSouth's response includes an amount of space less than that requested by DPI or space that is configured differently, no application fee will apply. If DPI decides to accept the available space, DPI must resubmit its application to reflect the actual space available, including the configuration of the space, prior to submitting a BFFO. When DPI resubmits its application, BellSouth will bill DPI the appropriate application fee. <u>Denial of Application</u>. If BellSouth notifies DPI that no space is available (Denial of Application), BellSouth will not assess an application fee to DPI. After notifying DPI that BellSouth has no available space in the requested Premises, BellSouth will allow DPI, upon request, to tour the entire Premises within ten (10) calendar days of such Denial of Application. In order to schedule this tour within ten (10) calendar days, the request for the tour of the Premises must be received by BellSouth within five (5) calendar days of the Denial of Application.

6.6 <u>Filing of Petition for Waiver</u>. Upon Denial of Application, BellSouth will timely file a petition with the Commission pursuant to 47 U.S.C. § 251(c)(6). BellSouth shall

provide to the Commission any information requested by that Commission. Such information shall include which space, if any, BellSouth or any of BellSouth's affiliates have reserved for future use and a detailed description of the specific future uses for which the space has been reserved. Subject to an appropriate nondisclosure agreement or provision, BellSouth shall permit DPI to inspect any floor plans or diagrams that BellSouth provides to the Commission.

6.7 Waiting List. On a first-come, first-served basis, governed by the date of receipt of an application or Letter of Intent, BellSouth will maintain a waiting list of requesting carriers who have either received a Denial of Application or, where it is publicly known that the Premises is out of space, have submitted a Letter of Intent to collocate in that Premises. BellSouth will notify the telecommunications carriers on the waiting list that can be accommodated by the amount of space that becomes available, according to the position of the telecommunications carriers on said waiting list.

6.7.1 In Florida, on a first-come, first-served basis, governed by the date of receipt of an application or Letter of Intent, BellSouth will maintain a waiting list of requesting carriers who have either received a Denial of Application or, where it is publicly known that the Premises is out of space, have submitted a Letter of Intent to collocate in that Premises. Sixty (60) calendar days prior to space becoming available, if known, BellSouth will notify the Commission and the telecommunications carriers on the waiting list by mail when space becomes available according to the position of each telecommunications carrier on said waiting list. If BellSouth does not know sixty (60) calendar days in advance of when space will become available, BellSouth will notify the Commission and the telecommunications carriers on the waiting list within two (2) business days of the determination that space is available. A telecommunications carrier that, upon denial of physical collocation, requests virtual collocation shall be automatically placed on the waiting list.

6.7.2 When space becomes available, DPI must submit an updated, complete, and correct application to BellSouth within thirty (30) calendar days of notification by BellSouth that space will be available in the Premises previously out of space. If DPI has originally requested caged Collocation Space and cageless Collocation Space becomes available, DPI may refuse such space and notify BellSouth in writing within the thirty (30) day timeframe that DPI wants to maintain its place on the waiting list, without accepting the available cageless Collocation Space. DPI may accept an amount of space less than its originally requested space by submitting an application as set forth above, and upon request, may maintain its position on the waiting list for the remaining space that was initially requested. If DPI does not submit an application or notify BellSouth in writing as described above, BellSouth will offer the space to the next telecommunications carrier on the waiting list and remove DPI from the waiting list. Upon request, BellSouth will advise DPI as to its position on the waiting list.

6.8 Public Notification. BellSouth will maintain on its Interconnection Services website a notification document that will indicate all Premises that are without available space. BellSouth shall update such document within ten (10) calendar days of the date that

BellSouth becomes aware that insufficient space is available to accommodate physical collocation. BellSouth will also post a document on its Interconnection Services website that contains a general notice when space has become available in a Premises previously on the space exhaust list.

6.9 Application Response.

6.9.1 In Alabama, Georgia, Kentucky, Mississippi, North Carolina, South Carolina, and Tennessee, when space has been determined to be available for caged or cageless arrangements, BellSouth will provide an Application Response within twenty (20) calendar days of receipt of a Bona Fide application. The Application Response will include, at a minimum, the configuration of the space, the Cable Installation Fee, Cable Records Fee, and any other applicable space preparation fees, as described in Section 8.

6.9.2 In Florida, within fifteen (15) calendar days of receipt of a Bona Fide application, when space has been determined to be available or when a lesser amount of space than that requested is available, then with respect to the space available, BellSouth will provide an Application Response including sufficient information to enable DPI to place a Firm Order. The Application Response will include, at a minimum, the configuration of the space, the Cable Installation Fee, Cable Records Fee, and the space preparation fees, as described in Section 8. When DPI submits ten (10) or more applications within ten (10) calendar days, the initial fifteen (15) calendar day response interval will increase by ten (10) calendar days for every additional ten (10) applications or fraction thereof.

6.9.3 In Louisiana, when space has been determined to be available, BellSouth will provide an Application Response within thirty (30) calendar days for one (1) to ten (10) applications; thirty-five (35) calendar days for eleven (11) to twenty (20) applications; and for requests of more than twenty (20) applications, the Application Response interval will be increased by five (5) calendar days for every five (5) applications received within five (5) business days. The Application Response will include, at a minimum, the configuration of the space, the Cable Installation Fee, Cable Records Fee, and the space preparation fees, as described in Section 8.

6.10 Application Modifications.

6.10.1 If a modification or revision is made to any information in the Bona Fide Application prior to a BFFO, with the exception of modifications to Customer Information, Contact Information or Billing Contact Information, at the request of DPI, or necessitated by technical considerations, the application shall be considered a new application and handled as a new application with respect to the response and provisioning intervals. BellSouth will charge DPI the appropriate application fee associated with the level of assessment performed by BellSouth. If the modification requires no labor or capital expenditure by BellSouth, but BellSouth must perform an assessment of the application to evaluate whether or not BellSouth would be required

to perform necessary infrastructure or provisioning activities, then an Administrative Only Application Fee shall apply. The fee for an application modification where the modification requested has limited effect (e.g., requires labor expenditure but no capital expenditure by BellSouth and where sufficient cable support structure, HVAC, power and terminations are available) shall be the Subsequent Application Fee as set forth in Exhibit B. A modification involving a capital expenditure by BellSouth shall require DPI to submit the application with an Initial Application Fee. This nonrecurring fee will be billed by BellSouth on the date that BellSouth provides DPI with an Application Response.

6.11 Bona Fide Firm Order.

6.11.1 DPI shall indicate its intent to proceed with equipment installation in a BellSouth Premises by submitting a Bona Fide Firm Order (BFFO) to BellSouth. The BFFO must be received by BellSouth no later than thirty (30) calendar days after BellSouth's Application Response to DPI's Bona Fide Application or DPI's application will expire.

6.11.2 BellSouth will establish a firm order date based upon the date BellSouth is in receipt of DPI's BFFO. BellSouth will acknowledge the receipt of DPI's BFFO within seven (7) calendar days of receipt, so that DPI will have positive confirmation that its BFFO has been received. BellSouth's response to a BFFO will include a Firm Order Confirmation, which contains the firm order date. No revisions can be made to a BFFO.

7. Construction and Provisioning

7.1 Construction and Provisioning Intervals.

7.1.1 In Florida, BellSouth will complete construction for collocation arrangements as soon as possible within a maximum of ninety (90) calendar days from receipt of a BFFO or as agreed to by the Parties. For Augments requested to the Collocation Space after initial space completion, BellSouth will complete construction for collocation arrangements as soon as possible within a maximum of forty-five (45) calendar days from receipt of a BFFO or as agreed to by the Parties. If BellSouth does not believe that construction will be completed within the relevant timeframe and BellSouth and DPI cannot agree upon a completion date, within forty-five (45) calendar days of receipt of the BFFO for an initial request, and within thirty (30) calendar days of receipt of the BFFO for an Augment, BellSouth may seek an extension from the Commission.

7.1.2 In Alabama, Georgia, Kentucky, Louisiana, Mississippi, North Carolina, South Carolina, and Tennessee, BellSouth will complete construction for caged collocation arrangements under ordinary conditions as soon as possible within a maximum of ninety (90) calendar days from receipt of a BFFO or as agreed to by the Parties. BellSouth will complete construction for cageless collocation arrangements under ordinary conditions as soon as possible within a maximum of sixty (60) calendar days

from receipt of a BFFO and ninety (90) calendar days from receipt of a BFFO for extraordinary conditions, or as agreed to by the Parties. Ordinary conditions are defined as space available with only minor changes to support systems required such as, but not limited to, HVAC, cabling and the power plant. Extraordinary conditions shall include, but not be limited to, major BellSouth equipment rearrangements or additions; power plant additions or upgrades; major mechanical additions or upgrades; a major upgrade for ADA compliance; environmental hazard or hazardous materials abatement; and arrangements for which equipment shipping intervals are extraordinary in length. The Parties may mutually agree to renegotiate an alternative provisioning interval or BellSouth may seek a waiver from this interval from the Commission.

7.1.3 When DPI adds equipment within initial demand parameters that requires no additional space preparation work on the part of BellSouth, then no additional charges or additional intervals will be imposed by BellSouth that would delay DPI's operation.

7.1.4 In the states of Alabama, Georgia, Kentucky, Louisiana, Mississippi, North Carolina, and South Carolina, BellSouth will provide the reduced intervals outlined below to DPI, when DPI requests an Augment after the Space Ready Date for existing physical collocation space. In such instances, DPI must provide an accurate front equipment view (a.k.a. rack elevation drawing) specifying bay(s) for DPI's point of termination.

7.1.4.1 Simple Augments will be completed within twenty (20) calendar days after receipt of the BFFO for an:

- Extension of Existing AC Circuit Capacity within Arrangement Where Sufficient Circuit Capacity is Available
- Fuse Change and/or Increase or Decrease -48V DC Power from Existing ILEC BDFB

7.1.4.2 Minor Augments will be completed within forty-five (45) calendar days after receipt of the BFFO for:

- 168 DS1s Terminations at the ILEC Demarcation Frame (Databasing Only; Panels, Relay Racks and Overhead Racking Exist)
- 96 DS3s Terminations at the ILEC Demarcation Frame (Databasing Only; Panels, Relay Racks and Overhead Racking Exist)
- 99 Fiber Terminations at the ILEC Demarcation Frame (Databasing Only; Panels, Relay Racks and Overhead Racking Exist)
- Maximum of 2000 Service Ready DS0 Terminations at the ILEC Demarcation Frame (Databasing Only; Panels, Relay Racks and Overhead Racking Exist)

7.1.4.3 Intermediate Augments will be completed within sixty (60) calendar days after receipt of the BFFO for:

- 168 DS1s (Databasing and Installation of Termination Panels, Relay Racks or Additional Structure as Required)

- 96 DS3s (Databasing and Installation of Termination Panels, Relay Racks or Additional Structure as Required)
- 99 Fiber Terminations (Databasing and Installation of Termination Panels, Relay Racks or Additional Structure as Required)
- 2000 DS0s (Databasing and Installation of Termination Panels, Relay Racks or Additional Structure as Required)
- Install Cable Racking or Other Support Structures as Required to Support Co-Carrier Cross Connects (Adequate Floor or Ceiling Structural Capacity Exists and Support/Protection Structure for Fiber Patch Cord is Excluded)

7.1.4.4 Major Augments – Physical Collocation will be completed within ninety (90) calendar days after BFFO and includes all requests for additional physical collocation space (caged or cageless).

7.1.4.5 Major Augments – Virtual Collocation will be completed within seventy-five (75) calendar days after BFFO and includes all requests for additional virtual collocation space.

7.1.4.6 If DPI submits an augment application request that includes two augment items from the same category in Sections 7.1.4.1, 7.1.4.2, and 7.1.4.3 above, the augment interval associated with the next highest augment category will apply (e.g., if two items from the minor augment category are requested on the same request, then an interval of sixty (60) calendar days from the receipt of the BFFO would apply, which is the interval associated with the intermediate category).

7.1.4.7 If DPI submits an augment application request that includes three augment items from the same category in Sections 7.1.4.1, 7.1.4.2, and 7.1.4.3 above, the major augment interval of ninety (90) calendar days from the receipt of the BFFO would apply (e.g., if three items from the simple augment category are requested on the same request for a physical collocation arrangement, then an interval of ninety (90) calendar days from the receipt of the BFFO would apply, which is the major physical augment interval; likewise if three items from the simple augment category are requested on the same request for a virtual collocation arrangement, then an interval of seventy-five (75) calendar days from the receipt of the BFFO would apply, which is the major virtual augment interval;).

7.1.4.8 If DPI submits an augment application request that includes one augment item from two separate categories in Sections 7.1.4.1, 7.1.4.2 and 7.1.4.3 above, the augment interval associated with the highest augment category will apply (e.g., if an item from the minor augment category and an item from the intermediate augment category are requested on the same request, then an interval of sixty (60) calendar days from the receipt of the BFFO would apply, which is the interval associated with the intermediate augment category).

7.1.4.9 All Augments not expressly included in the Simple, Minor, Intermediate or Major categories as outlined above will be placed into the appropriate category as negotiated by DPI and BellSouth. If DPI and BellSouth are unable to determine the appropriate

category through negotiation, then the appropriate major augment category identified in Sections 7.1.4.4 and 7.1.4.5 would apply based on whether the augment request is for DPI's physical or virtual collocation arrangement.

7.1.4.10 Individual application fees associated with simple, minor and intermediate augment applications are contained in Exhibit B. The appropriate application fee will be assessed to DPI at the time BellSouth provides DPI with the Application Response. DPI will be assessed a Subsequent Application Fee for all Major Augment applications (Major Augments are defined above in Sections 7.1.4.4 and 7.1.4.5). The Subsequent Application Fee is also reflected in Exhibit B of this Attachment.

7.2 Joint Planning. Joint planning between BellSouth and DPI will commence within a maximum of twenty (20) calendar days from BellSouth's receipt of a BFFO. BellSouth will provide the preliminary design of the Collocation Space and the equipment configuration requirements as reflected in the Bona Fide application and affirmed in the BFFO. The Collocation Space completion interval will be provided to DPI during the joint planning meeting.

7.3 Permits. Each Party or its agent(s) will diligently pursue filing for the permits required for the scope of work to be performed by that Party or its agent(s) within ten (10) calendar days of the completion of the finalized construction design and specifications.

7.4 Acceptance Walkthrough. DPI will schedule and complete an acceptance walkthrough of each Collocation Space with BellSouth within fifteen (15) calendar days of BellSouth's notification to DPI that the Collocation Space is ready for occupancy. In the event DPI fails to complete an acceptance walkthrough within this fifteen (15) day interval, the Collocation Space shall be deemed accepted by DPI on the Space Ready Date. BellSouth will correct any deviations to DPI's original or jointly amended design and/or specification requirements within seven (7) calendar days after the walkthrough, unless the Parties jointly agree upon a different timeframe.

7.5 Circuit Facility Assignments (CFAs). Unless otherwise specified, BellSouth will provide CFAs to DPI prior to the applicable provisioning interval set forth herein (Provisioning Interval) for those Premises in which DPI has a physical collocation arrangement with no POT bay or with a POT bay provided by BellSouth. BellSouth cannot provide CFAs to DPI prior to the Provisioning Interval for those Premises in which DPI has a physical collocation arrangement with a POT bay provided by DPI or a virtual collocation arrangement, until DPI provides BellSouth with the following information:

7.5.1 For a physical collocation arrangement with a DPI-provided POT bay - a complete layout of the POT panels (equipment inventory update (EIU) form) showing locations, speeds, etc.

7.5.2 For a virtual collocation arrangement - a complete layout of DPI's equipment (equipment inventory update (EIU) form), including the locations of the low speed

ports and the specific frame terminations to which the equipment will be wired by DPI's BellSouth Certified Supplier.

7.5.3 BellSouth cannot begin work on the CFAs until the complete and accurate EIU form is received from DPI. If the EIU form is provided ten (10) calendar days prior to the ending date of the Provisioning Interval, then CFAs will be made available by the ending date of the Provisioning Interval. If the EIU form is not received ten (10) calendar days prior to the ending date of the Provisioning Interval, then the CFAs will be provided within ten (10) calendar days of receipt of the EIU form.

7.5.4 BellSouth will bill DPI a nonrecurring charge, as set forth in Exhibit B, each time DPI requests a resend of its CFAs for any reason other than a BellSouth error in the CFAs initially provided to DPI.

7.6 Use of BellSouth Certified Supplier. DPI shall select a supplier which has been approved as a BellSouth Certified Supplier to perform all engineering and installation work. DPI and DPI's BellSouth Certified Supplier must follow and comply with all of BellSouth's requirements, outlined in BellSouth TR 73503, TR 73519, TR 73572, and TR 73564. In some cases, DPI must select separate BellSouth Certified Suppliers for those work activities associated with transmission equipment, switching equipment and power equipment. BellSouth shall provide DPI with a list of BellSouth Certified Suppliers, upon request. The BellSouth Certified Supplier(s) shall be responsible for installing DPI's equipment and associated components, extending power cabling to the BellSouth power distribution frame, performing operational tests after installation is complete, and notifying BellSouth's equipment engineers and DPI upon successful completion of installation, etc. The BellSouth Certified Supplier shall bill DPI directly for all work performed for DPI pursuant to this Attachment. BellSouth shall have no liability for, nor responsibility to pay, such charges imposed by DPI's BellSouth Certified Supplier. BellSouth shall make available its supplier certification program to DPI or any supplier proposed by DPI and will not unreasonably withhold certification. All work performed by or for DPI shall conform to generally accepted industry standards.

7.7 Alarm and Monitoring. BellSouth shall place environmental alarms in the Premises for the protection of BellSouth equipment and facilities. DPI shall be responsible for placement, monitoring and removal of environmental and equipment alarms used to service DPI's Collocation Space. Upon request, BellSouth will provide DPI with an applicable tariffed service(s) to facilitate remote monitoring of collocated equipment by DPI. Both Parties shall use best efforts to notify the other of any verified environmental condition known to that Party.

7.8 Virtual to Physical Collocation Relocation. In the event physical Collocation Space was previously denied at a location due to technical reasons or space limitations and physical Collocation Space has subsequently become available, DPI may relocate its existing virtual collocation arrangement(s) to a physical collocation arrangement(s) and pay the appropriate fees associated with physical collocation and the rearrangement or reconfiguration of services terminated in the virtual collocation

arrangement, as outlined in the appropriate BellSouth Tariffs. In the event BellSouth knows when additional space for physical collocation may become available at the location requested by DPI, such information will be provided to DPI in BellSouth's written denial of physical collocation space. To the extent that (i) physical Collocation Space becomes available to DPI within one hundred eighty (180) calendar days of BellSouth's written denial of DPI's request for physical collocation, (ii) BellSouth had knowledge that the space was going to become available, and (iii) DPI was not informed in the written denial that physical Collocation Space would become available within such one hundred eighty (180) calendar days, then DPI may relocate its virtual collocation arrangement to a physical collocation arrangement and will receive a credit for any nonrecurring charges previously paid for such virtual collocation. DPI must arrange with a BellSouth Certified Supplier for the relocation of equipment from its virtual Collocation Space to its physical Collocation Space and will bear the cost of such relocation.

7.8.1 In Alabama, BellSouth will complete a relocation from virtual collocation to cageless physical collocation within thirty (30) calendar days and from virtual collocation to caged physical collocation within ninety (90) calendar days.

7.9 Virtual to Physical Conversion (In-Place). Virtual collocation arrangements may be converted to "in-place" physical arrangements if the potential conversion meets the following four criteria: 1) there is no change in the amount of equipment or the configuration of the equipment that was in the virtual collocation arrangement; 2) the conversion of the virtual collocation arrangement will not cause the equipment or the results of that conversion to be located in a space that BellSouth has reserved for its own future needs; 3) the converted arrangement does not limit BellSouth's ability to secure its own equipment and facilities due to the location of the virtual collocation arrangement; and 4) any changes to the arrangement can be accommodated by existing power, HVAC, and other requirements. Unless otherwise specified, BellSouth will complete virtual to in-place physical collocation conversions within sixty (60) calendar days from receipt of the BFFO. BellSouth will bill DPI an Administrative Only Application Fee as set forth in Exhibit B on the date that BellSouth provides an Application Response to DPI.

7.9.1 In Alabama and Tennessee, BellSouth will complete Virtual to Physical Conversions (In Place) within thirty (30) calendar days from receipt of the BFFO.

7.10 Cancellation. If at any time prior to space acceptance, DPI cancels its order for the Collocation Space(s) (Cancellation), BellSouth will bill the applicable nonrecurring rate(s) for any and all work processes for which work has begun or been completed. In Georgia, if DPI cancels its order for Collocation Space at any time prior to space acceptance, BellSouth will bill DPI for all costs incurred prior to the date of Cancellation and for any costs incurred as a direct result of the Cancellation, not to exceed the total amount that would have been due had the order not been cancelled.

7.11 Licenses. DPI, at its own expense, will be solely responsible for obtaining from governmental authorities, and any other appropriate agency, entity, or person, all

rights, privileges, and licenses necessary or required to operate as a provider of telecommunications services to the public or to build-out, equip and/or occupy the Collocation Space.

7.12 Environmental Compliance. The Parties agree to utilize and adhere to the Environmental Hazard Guidelines identified in Exhibit A attached hereto.

8. Rates and Charges

8.1 Application Fee. BellSouth shall assess an application fee via a service order, which shall be issued at the time BellSouth responds that space is available pursuant to Section 6.10 (Application Response). BellSouth will bill this nonrecurring fee on the date that BellSouth provides an Application Response to DPI.

8.1.1 In Tennessee the applicable application fee is the planning fee for both Initial Applications and Subsequent Applications placed by DPI. BellSouth will bill this nonrecurring fee on the date that BellSouth provides an Application Response to DPI.

8.2 Cable Installation. Cable Installation Fee(s) are assessed per entrance cable placed. This nonrecurring fee will be billed by BellSouth upon receipt of DPI's BFFO.

8.3 Recurring Charges. If DPI has met the applicable fifteen (15) calendar day walkthrough interval(s) specified in Section 4, billing for recurring charges will begin upon the Space Acceptance Date. In the event that DPI fails to complete an acceptance walkthrough within the applicable fifteen (15) calendar day interval(s), billing for recurring charges will commence on the Space Ready Date. If DPI occupies the space prior to the Space Ready Date, the date DPI occupies the space becomes the new Space Acceptance Date and billing for recurring charges begin on that date.

8.4 Space Preparation. Space preparation fees consist of a nonrecurring charge for firm order processing and monthly recurring charges for central office modifications assessed per arrangement, per square foot and common systems modifications assessed per arrangement, per square foot for cageless collocation and per cage for caged collocation. DPI shall remit payment of the nonrecurring firm order processing fee coincident with submission of a BFFO. The charges recover the costs associated with preparing the Collocation Space, which includes survey, engineering of the Collocation Space, design and modification costs for network, building and support systems. In the event DPI opts for cageless space, the space preparation fees will be assessed based on the total floor space dedicated to DPI as prescribed in this Section.

8.5 Floor Space. The Floor Space Charge includes reasonable charges for lighting, HVAC, and other allocated expenses associated with maintenance of the Premises but does not include any power-related costs incurred by BellSouth. When the Collocation Space is enclosed, DPI shall pay floor space charges based upon the number of square feet so enclosed. When the Collocation Space is not enclosed, DPI shall pay floor space charges based upon the following floor space calculation: [(depth

of the equipment lineup in which the rack is placed) + (0.5 x maintenance aisle depth) + (0.5 x wiring aisle depth)] X (width of rack and spacers). For purposes of this calculation, the depth of the equipment lineup shall consider the footprint of equipment racks plus any equipment overhang. BellSouth will assign unenclosed Collocation Space in conventional equipment rack lineups where feasible. In the event DPI's collocated equipment requires special cable racking, isolated grounding or other treatment which prevents placement within conventional equipment rack lineups, DPI shall be required to request an amount of floor space sufficient to accommodate the total equipment arrangement.

8.6 Power. BellSouth shall make available –48 Volt (-48V) Direct Current (DC) power for DPI's Collocation Space at a BellSouth Power Board or BellSouth Battery Distribution Fuse Bay (BDFB) at DPI's option within the Premises. BellSouth will revise recurring power charges to reflect a power upgrade upon notification of the completion of the upgrade by DPI's BellSouth Certified Vendor. BellSouth will revise recurring power charges to reflect a power reduction upon BellSouth's receipt of the Power Reduction Form from DPI certifying the completion of the power reduction, including the removal of the power cabling by DPI's BellSouth Certified Supplier.

8.6.1 When obtaining power from a BDFB, fuses and power cables (A&B) must be engineered (sized), and installed by DPI's BellSouth Certified Supplier. When obtaining power from a BellSouth power board, power cables (A&B) must be engineered (sized), and installed by DPI's BellSouth Certified Supplier. DPI is responsible for contracting with a BellSouth Certified Supplier for power distribution feeder cable runs from a BellSouth BDFB or BellSouth power board to DPI's equipment. The determination of the BellSouth BDFB or BellSouth power board as the power source will be made at BellSouth's sole, but reasonable, discretion. The BellSouth Certified Supplier contracted by DPI must provide BellSouth with a copy of the engineering power specifications prior to the day on which DPI's equipment becomes operational (Commencement Date). BellSouth will provide the common power feeder cable support structure between the BellSouth BDFB or BellSouth power board and DPI's arrangement area. DPI shall contract with a BellSouth Certified Supplier who will be responsible for the following: dedicated power cable support structure within DPI's arrangement, power cable feeds, and terminations of cable. Any terminations at a BellSouth power board must be performed by a BellSouth Certified Supplier. DPI shall comply with all applicable National Electric Code (NEC), BellSouth TR73503, Telcordia and ANSI Standards regarding power cabling, installation, and maintenance.

8.6.2 If DPI elects to install its own DC Power Plant, BellSouth shall provide Alternating Current (AC) power to feed DPI's DC Power Plant. Charges for AC power will be assessed per breaker ampere per month. Rates include the provision of commercial and standby AC power. When obtaining power from a BellSouth service panel, protection devices and power cables must be engineered (sized), and installed by DPI's BellSouth Certified Supplier except that BellSouth shall engineer and install protection devices and power cables for Adjacent Collocation. DPI's BellSouth Certified

Supplier must also provide a copy of the engineering power specifications prior to the Commencement Date. Charges for AC power shall be assessed pursuant to the rates specified in Exhibit B. AC power voltage and phase ratings shall be determined on a per location basis. At DPI's option, DPI may arrange for AC power in an Adjacent Collocation arrangement from a retail provider of electrical power.

8.6.3 In Tennessee, recurring charges for -48V DC power consumption will be assessed per ampere per month based upon the engineered and installed power feed fused ampere capacity. Rates include redundant feeder fuse positions (A&B) and common cable racks to DPI's equipment or space enclosure. DPI shall contract with a BellSouth Certified Supplier who will be responsible for the following: dedicated power cable support structure within DPI's arrangement and terminations of cable within the Collocation Space.

8.6.3.1 In Tennessee, nonrecurring charges for –48V DC power distribution will be based on the common power feeder cable support structure between the BellSouth BDFB and DPI's arrangement area.

8.6.4 In Alabama and Louisiana, DPI has the option to purchase power directly from an electric utility company. Under such an option, DPI is responsible for contracting with the electric utility company for its own power feed and meter, and is financially responsible for purchasing all equipment necessary to accomplish the arrangement, including inverters, batteries, power boards, bus bars, BDFBs, backup power supplies and cabling. The actual work to install this arrangement must be performed by a BellSouth Certified Supplier hired by DPI. DPI's BellSouth Certified Supplier must comply with all applicable safety codes, including the National Electric Safety Codes, in installing this power arrangement. If DPI previously had power supplied by BellSouth, DPI may request to change its arrangement to obtain power from an electric utility company by submitting a Subsequent Application. BellSouth will waive any application fee for this subsequent application if no other change was requested therein. Any floor space, cable racking, etc. utilized by DPI in provisioning said power will be billed on an ICB basis.

8.6.5 In South Carolina, DPI has the option to purchase power directly from an electric utility company where technically feasible and where space is available in a requested Premises. Under such an option, DPI is responsible for contracting with the electric utility company for its own power feed and meter, and is financially responsible for purchasing all equipment necessary to accomplish the arrangement, including inverters, batteries, power boards, bus bars, BDFBs, backup power supplies and power cabling. The actual work to install this arrangement must be performed by a BellSouth Certified Supplier hired by DPI. DPI's BellSouth Certified Supplier must comply with all applicable national, regional, state and local safety, electrical, fire and building codes, including the National Electric Safety Code standards, in installing this power arrangement, just as BellSouth is required to comply with these codes. DPI must submit an application to BellSouth for the appropriate amount of Collocation Space that DPI requires to install this type of power arrangement. BellSouth will evaluate

the request and determine if the appropriate amount of space is available within the office for the installation of DPI's power equipment and facilities. This type of power arrangement must be located in an appropriate area in the central office that has been properly conditioned for the installation of power equipment and conforms to the applicable national, regional, state and local safety, electrical, fire and building codes. BellSouth shall waive the application fee or any other nonrecurring charge that would otherwise be due from a CLEC that decides to reconfigure an existing collocation power arrangement so as to purchase power directly from an electric utility company as provided herein. DPI shall be responsible for the recurring charges associated with the central office space needed for collocation of this type of power arrangement, including space required to place associated power-related equipment and facilities (i.e., batteries, generator, power meter, etc.). If there is no space available for this type of power arrangement in the requested central office, BellSouth may seek a waiver of these requirements from the Commission for the central office requested. DPI would still have the option to order its power needs directly from BellSouth.

8.6.6 If DPI requests a reduction in the amount of power that BellSouth is currently providing, DPI must submit a Subsequent Application. If no modification to the Collocation Space is requested other than the reduction in power, the Subsequent Application Fee for Power Reduction as set forth in Exhibit B will apply. If modifications are requested in addition to the reduction of power, the Subsequent Application Fee will apply. BellSouth will bill this nonrecurring fee on the date that BellSouth provides an Application Response.

8.6.7 In Alabama and Louisiana, if DPI is currently served from the BellSouth main power board and requests that its power be reconfigured to connect to a BellSouth BDFB, in a specific central office, DPI must submit a Subsequent Application. BellSouth will respond to such application within seven (7) calendar days and no application fee will apply.

8.7 Security Escort. A security escort will be required whenever DPI or its approved agent desires access to the entrance manhole or must have access to the Premises after the one accompanied site visit allowed pursuant to Section 5 prior to completing BellSouth's Security Training requirements. Rates for a security escort are assessed according to the schedule appended hereto as Exhibit B beginning with the scheduled escort time. BellSouth will wait for one-half (1/2) hour after the scheduled time for such an escort and DPI shall pay for such half-hour charges in the event DPI fails to show up.

8.8 Cable Record charges. These charges apply for work required to build cable records in BellSouth systems. The VG/DS0 per cable record charge is for a maximum of 3600 records. The Fiber cable record charge is for a maximum of 99 records. These nonrecurring fees will be billed upon receipt of DPI's BFFO.

8.9 Other. If no rate is identified in the contract, the rate for the specific service or function will be negotiated by the Parties upon request by either Party.

9. Insurance

9.1 DPI shall, at its sole cost and expense, procure, maintain, and keep in force insurance as specified in this Section and underwritten by insurance companies licensed to do business in the states applicable under this Agreement and having a Best's Insurance Rating of A-.

9.2 DPI shall maintain the following specific coverage:

9.2.1 Commercial General Liability coverage in the amount of ten million dollars ($10,000,000.00) or a combination of Commercial General Liability and Excess/Umbrella coverage totaling not less than ten million dollars ($10,000,000.00). BellSouth shall be named as an Additional Insured on the Commercial General Liability policy as specified herein.

9.2.2 Statutory Workers Compensation coverage and Employers Liability coverage in the amount of one hundred thousand dollars ($100,000.00) each accident, one hundred thousand dollars ($100,000.00) each employee by disease, and five hundred thousand dollars ($500,000.00) policy limit by disease.

9.2.3 All Risk Property coverage on a full replacement cost basis insuring all of DPI's real and personal property situated on or within BellSouth's Central Office location(s).

9.2.4 DPI may elect to purchase business interruption and contingent business interruption insurance, having been advised that BellSouth assumes no liability for loss of profit or revenues should an interruption of service occur.

9.3 The limits set forth in Section 9.2 above may be increased by BellSouth from time to time during the term of this Agreement upon thirty (30) calendar days notice to DPI to at least such minimum limits as shall then be customary with respect to comparable occupancy of BellSouth structures.

9.4 All policies purchased by DPI shall be deemed to be primary and not contributing to or in excess of any similar coverage purchased by BellSouth. All insurance must be in effect on or before the date equipment is delivered to Premises and shall remain in effect for the term of this Attachment or until all DPI's property has been removed from BellSouth's Premises, whichever period is longer. If DPI fails to maintain required coverage, BellSouth may pay the premiums thereon and seek reimbursement of same from DPI.

9.5 DPI shall submit certificates of insurance reflecting the coverage required pursuant to this Section a minimum of ten (10) business days prior to the commencement of any work in the Collocation Space. Failure to meet this interval may result in construction and equipment installation delays. DPI shall arrange for BellSouth to receive thirty (30) business days' advance notice of cancellation from DPI's insurance company. DPI shall forward a certificate of insurance and notice of cancellation/non-renewal to BellSouth at the following address:

BellSouth Telecommunications, Inc.
Attn.: Risk Management Coordinator
17H53 BellSouth Center
675 W. Peachtree Street
Atlanta, Georgia 30375

9.6 DPI must conform to recommendations made by BellSouth's fire insurance company to the extent BellSouth has agreed to, or shall hereafter agree to, such recommendations.

9.7 Self-Insurance. If DPI's net worth exceeds five hundred million dollars ($500,000,000), DPI may elect to request self-insurance status in lieu of obtaining any of the insurance required in Sections 9.2.1 and 9.2.2. DPI shall provide audited financial statements to BellSouth thirty (30) calendar days prior to the commencement of any work in the Collocation Space. BellSouth shall then review such audited financial statements and respond in writing to DPI in the event that self-insurance status is not granted to DPI. If BellSouth approves DPI for self-insurance, DPI shall annually furnish to BellSouth, and keep current, evidence of such net worth that is attested to by one of DPI's corporate officers. The ability to self-insure shall continue so long as the DPI meets all of the requirements of this Section. If DPI subsequently no longer satisfies this Section, DPI is required to purchase insurance as indicated by Sections 9.2.1 and 9.2.2.

9.8 The net worth requirements set forth in Section 9.7 may be increased by BellSouth from time to time during the term of this Attachment upon thirty (30) calendar days' notice to DPI to at least such minimum limits as shall then be customary with respect to comparable occupancy of BellSouth structures.

9.9 Failure to comply with the provisions of this Section will be deemed a material breach of this Attachment.

10. Mechanics Liens

10.1 If any mechanics lien or other liens shall be filed against property of either Party (BellSouth or DPI), or any improvement thereon by reason of or arising out of any labor or materials furnished or alleged to have been furnished or to be furnished to or for the other Party or by reason of any changes, or additions to said property made at the request or under the direction of the other Party, the other Party directing or requesting those changes shall, within thirty (30) business days after receipt of written notice from the Party against whose property said lien has been filed, either pay such lien or cause the same to be bonded off the affected property in the manner provided by law. The Party causing said lien to be placed against the property of the other shall also defend, at its sole cost and expense, on behalf of the other, any action, suit or proceeding which may be brought for the enforcement of such liens and shall pay any damage and discharge any judgment entered thereon.

11. Inspections

11.1 BellSouth may conduct an inspection of DPI's equipment and facilities in the Collocation Space(s) prior to the activation of facilities between DPI's equipment and equipment of BellSouth. BellSouth may conduct an inspection if DPI adds equipment and may otherwise conduct routine inspections at reasonable intervals mutually agreed upon by the Parties. BellSouth shall provide DPI with a minimum of forty-eight (48) hours or two (2) business days, whichever is greater, advance notice of all such inspections. All costs of such inspection shall be borne by BellSouth.

12. Security and Safety Requirements

12.1 Unless otherwise specified, DPI will be required, at its own expense, to conduct a statewide investigation of criminal history records for each DPI employee hired in the past five years being considered for work on the Premises, for the states/counties where the DPI employee has worked and lived for the past five years. Where state law does not permit statewide collection or reporting, an investigation of the applicable counties is acceptable. DPI shall not be required to perform this investigation if an affiliated company of DPI has performed an investigation of the DPI employee seeking access, if such investigation meets the criteria set forth above. This requirement will not apply if DPI has performed a pre-employment statewide investigation of criminal history records of the DPI employee for the states/counties where the DPI employee has worked and lived for the past five years or, where state law does not permit a statewide investigation, an investigation of the applicable counties.

12.2 DPI will be required to administer to its personnel assigned to the Premises security training either provided by BellSouth, or meeting criteria defined by BellSouth.

12.3 DPI shall provide its employees and agents with picture identification, which must be worn and visible at all times while in the Collocation Space or other areas in or around the Premises. The photo identification card shall bear, at a minimum, the employee's name and photo and DPI's name. BellSouth reserves the right to remove from its Premises any employee of DPI not possessing identification issued by DPI or who has violated any of BellSouth's policies as outlined in the CLEC Security Training documents. DPI shall hold BellSouth harmless for any damages resulting from such removal of its personnel from BellSouth Premises. DPI shall be solely responsible for ensuring that any Guest(s) of DPI is in compliance with all subsections of this Section.

12.4 DPI shall not assign to the Premises any personnel with records of felony criminal convictions. DPI shall not assign to the Premises any personnel with records of misdemeanor convictions, except for misdemeanor traffic violations, without advising BellSouth of the nature and gravity of the offense(s). BellSouth reserves the right to refuse building access to any DPI personnel who have been identified to have misdemeanor criminal convictions. Notwithstanding the foregoing, in the event that DPI chooses not to advise BellSouth of the nature and gravity of any misdemeanor conviction, DPI may, in the alternative, certify to BellSouth that it shall not assign to

the Premises any personnel with records of misdemeanor convictions (other than misdemeanor traffic violations).

12.4.1 DPI shall not knowingly assign to the Premises any individual who was a former employee of BellSouth and whose employment with BellSouth was terminated for a criminal offense whether or not BellSouth sought prosecution of the individual for the criminal offense.

12.4.2 DPI shall not knowingly assign to the Premises any individual who was a former supplier of BellSouth and whose access to a Premises was revoked due to commission of a criminal offense whether or not BellSouth sought prosecution of the individual for the criminal offense.

12.5 For each DPI employee or agent hired by DPI within five years of being considered for work on the Premises, who requires access to a Premises pursuant to this Attachment, DPI shall furnish BellSouth, prior to an employee or agent gaining such access, a certification that the aforementioned background check and security training were completed. The certification will contain a statement that no felony convictions were found and certify that the employee completed the security training. If the employee's criminal history includes misdemeanor convictions, DPI will disclose the nature of the convictions to BellSouth at that time. In the alternative, DPI may certify to BellSouth that it shall not assign to the Premises any personnel with records of misdemeanor convictions other than misdemeanor traffic violations.

12.5.1 For all other DPI employees requiring access to a Premises pursuant to this Attachment, DPI shall furnish BellSouth, prior to an employee gaining such access, a certification that the employee is not subject to the requirements of Section 12.5 above and that security training was completed by the employee.

12.6 At BellSouth's request, DPI shall promptly remove from Premises any employee of DPI BellSouth does not wish to grant access to its Premises 1) pursuant to any investigation conducted by BellSouth or 2) prior to the initiation of an investigation if an employee of DPI is found interfering with the property or personnel of BellSouth or another collocated telecommunications carrier, provided that an investigation shall promptly be commenced by BellSouth.

12.7 <u>Security Violations</u>. BellSouth reserves the right to interview DPI's employees, agents, or suppliers in the event of wrongdoing in or around BellSouth's property or involving BellSouth's or another collocated telecommunications carrier's property or personnel, provided that BellSouth shall provide reasonable notice to DPI's Security representative of such interview. DPI and its suppliers shall reasonably cooperate with BellSouth's investigation into allegations of wrongdoing or criminal conduct committed by, witnessed by, or involving DPI's employees, agents, or suppliers. Additionally, BellSouth reserves the right to bill DPI for all reasonable costs associated with investigations involving its employees, agents, or suppliers if it is established and mutually agreed in good faith that DPI's employees, agents, or suppliers are responsible for the alleged act. BellSouth shall bill DPI for BellSouth

property, which is stolen or damaged where an investigation determines the culpability of DPI's employees, agents, or suppliers and where DPI agrees, in good faith, with the results of such investigation. DPI shall notify BellSouth in writing immediately in the event that DPI discovers one of its employees already working on the Premises is a possible security risk. Upon request of the other Party, the Party who is the employer shall discipline consistent with its employment practices, up to and including removal from BellSouth's Premises, any employee found to have violated the security and safety requirements of this Section. DPI shall hold BellSouth harmless for any damages resulting from such removal of its personnel from Premises.

12.8 Use of Supplies. Unauthorized use of equipment, supplies or other property by either Party, whether or not used routinely to provide telephone service will be strictly prohibited and handled appropriately. Costs associated with such unauthorized use may be charged to the offending Party, as may be all associated investigative costs.

12.9 Use of Official Lines. Except for non-toll calls necessary in the performance of their work, neither Party shall use the telephones of the other Party on the Premises. Charges for unauthorized telephone calls may be charged to the offending Party, as may be all associated investigative costs.

12.10 Accountability. Full compliance with the Security requirements of this Section shall in no way limit the accountability of either Party to the other for the improper actions of its employees.

13. Destruction of Collocation Space

13.1 In the event a Collocation Space is wholly or partially damaged by fire, windstorm, tornado, flood or by similar causes to such an extent as to be rendered wholly unsuitable for DPI's permitted use hereunder, then either Party may elect within ten (10) calendar days after such damage, to terminate occupancy of the damaged Collocation Space, and if either Party shall so elect, by giving the other written notice of termination, both Parties shall stand released of and from further liability under the terms hereof. If the Collocation Space shall suffer only minor damage and shall not be rendered wholly unsuitable for DPI's permitted use, or is damaged and the option to terminate is not exercised by either Party, BellSouth covenants and agrees to proceed promptly without expense to DPI, except for improvements not to the property of BellSouth, to repair the damage. BellSouth shall have a reasonable time within which to rebuild or make any repairs, and such rebuilding and repairing shall be subject to delays caused by storms, shortages of labor and materials, government regulations, strikes, walkouts, and causes beyond the control of BellSouth, which causes shall not be construed as limiting factors, but as exemplary only. DPI may, at its own expense, accelerate the rebuild of its collocated space and equipment provided however that a BellSouth Certified Supplier is used and the necessary space preparation has been completed. If DPI's acceleration of the project increases the cost of the project, then those additional charges will be incurred by DPI. Where allowed and where practical, DPI may erect a temporary facility while BellSouth rebuilds or makes repairs. In all

cases where the Collocation Space shall be rebuilt or repaired, DPI shall be entitled to an equitable abatement of rent and other charges, depending upon the unsuitability of the Collocation Space for DPI's permitted use, until such Collocation Space is fully repaired and restored and DPI's equipment installed therein (but in no event later than thirty (30) calendar days after the Collocation Space is fully repaired and restored). Where DPI has placed an Adjacent Arrangement pursuant to Section 3.4, DPI shall have the sole responsibility to repair or replace said Adjacent Arrangement provided herein. Pursuant to this Section, BellSouth will restore the associated services to the Adjacent Arrangement.

14. Eminent Domain

14.1 If the whole of a Collocation Space or Adjacent Arrangement shall be taken by any public authority under the power of eminent domain, then this Attachment shall terminate with respect to such Collocation Space or Adjacent Arrangement as of the day possession shall be taken by such public authority and rent and other charges for the Collocation Space or Adjacent Arrangement shall be paid up to that day with proportionate refund by BellSouth of such rent and charges as may have been paid in advance for a period subsequent to the date of the taking. If any part of the Collocation Space or Adjacent Arrangement shall be taken under eminent domain, BellSouth and DPI shall each have the right to terminate this Attachment with respect to such Collocation Space or Adjacent Arrangement and declare the same null and void, by written notice of such intention to the other Party within ten (10) calendar days after such taking.

15. Nonexclusivity

15.1 DPI understands that this Attachment is not exclusive and that BellSouth may enter into similar agreements with other Parties. Assignment of space pursuant to all such agreements shall be determined by space availability and made on a first come, first served basis

ENVIRONMENTAL AND SAFETY PRINCIPLES

The following principles provide basic guidance on environmental and safety issues when applying for and establishing Physical Collocation arrangements.

1. GENERAL PRINCIPLES

1.1 Compliance with Applicable Law. BellSouth and DPI agree to comply with applicable federal, state, and local environmental and safety laws and regulations including U.S. Environmental Protection Agency (USEPA) regulations issued under the Clean Air Act (CAA), Clean Water Act (CWA), Resource Conservation and Recovery Act (RCRA), Comprehensive Environmental Response, Compensation and Liability Act (CERCLA), Superfund Amendments and Reauthorization Act (SARA), the Toxic Substances Control Act (TSCA), and OSHA regulations issued under the Occupational Safety and Health Act of 1970, as amended and NFPA and National Electrical Codes (NEC) and the NESC (Applicable Laws). Each Party shall notify the other if compliance inspections are conducted by regulatory agencies and/or citations are issued that relate to any aspect of this Attachment.

1.2 Notice. BellSouth and DPI shall provide notice to the other, including Material Safety Data Sheets (MSDSs), of known and recognized physical hazards or Hazardous Chemicals existing on site or brought on site. A Hazardous Chemical inventory list is posted on an OSHA Poster and updated annually at each Central Office. This Poster is normally located near the front entrance of the building or in the lounge area. Each Party is required to provide specific notice for known potential Imminent Danger conditions. DPI should contact 1-800-743-6737 for any BellSouth MSDS required.

1.3 Practices/Procedures. BellSouth may make available additional environmental control procedures for DPI to follow when working at a Premises (See Section 2, below). These practices/procedures will represent the regular work practices required to be followed by the employees and suppliers of BellSouth for environmental protection. DPI will require its suppliers, agents and others accessing the Premises to comply with these practices. Section 2 lists the Environmental categories where BST practices should be followed by DPI when operating in the Premises.

1.4 Environmental and Safety Inspections. BellSouth reserves the right to inspect the DPI space with proper notification. BellSouth reserves the right to stop any DPI work operation that imposes Imminent Danger to the environment, employees or other persons in the area or Premises.

1.5 Hazardous Materials Brought On Site. Any hazardous materials brought into, used, stored or abandoned at the Premises by DPI are owned by DPI. DPI will indemnify BellSouth for claims, lawsuits or damages to persons or property caused by these materials. Without prior written BellSouth approval, no substantial new safety or environmental hazards can be created by DPI or different hazardous materials used by DPI at Premises. DPI must demonstrate adequate emergency response capabilities for its materials used or remaining at the Premises.

1.6 Spills and Releases. When contamination is discovered at a Premises, either Party discovering the condition must notify the other Party. All Spills or Releases of regulated materials will immediately

be reported by DPI to BellSouth.

1.7 Coordinated Environmental Plans and Permits. BellSouth and DPI will coordinate plans, permits or information required to be submitted to government agencies, such as emergency response plans, spill prevention control and countermeasures (SPCC) plans and community reporting. If fees are associated with filing, BellSouth and DPI will develop a cost sharing procedure. If BellSouth's permit or EPA identification number must be used, DPI must comply with all of BellSouth's permit conditions and environmental processes, including environmental "best management practices (BMP)" (see Section 2, below) and/or selection of BST disposition vendors and disposal sites.

1.8 Environmental and Safety Indemnification. BellSouth and DPI shall indemnify, defend and hold harmless the other Party from and against any claims (including, without limitation, third-party claims for personal injury or death or real or personal property damage), judgments, damages (including direct and indirect damages and punitive damages), penalties, fines, forfeitures, costs, liabilities, interest and losses arising in connection with the violation or alleged violation of any Applicable Law or contractual obligation or the presence or alleged presence of contamination arising out of the acts or omissions of the indemnifying Party, its agents, suppliers, or employees concerning its operations at the Premises.

2. CATEGORIES FOR CONSIDERATION OF ENVIRONMENTAL ISSUES

2.1 When performing functions that fall under the following Environmental categories on BellSouth's Premises, DPI agrees to comply with the applicable sections of the current issue of BellSouth's Environmental and Safety Methods and Procedures (M&Ps), incorporated herein by this reference. DPI further agrees to cooperate with BellSouth to ensure that DPI's employees, agents, and/or suppliers are knowledgeable of and satisfy those provisions of BellSouth's Environmental M&Ps which apply to the specific Environmental function being performed by DPI, its employees, agents and/or suppliers.

2.2 The most current version of the reference documentation must be requested from DPI's BellSouth Regional Contract Manager (RCM) (f/k/a Account Team Collocation Coordinator – ATCC).

ENVIRONMENTAL CATEGORIES	ENVIRONMENTAL ISSUES	ADDRESSED BY THE FOLLOWING DOCUMENTATION
Disposal of hazardous material or other regulated material (e.g., batteries, fluorescent tubes, solvents & cleaning materials)	Compliance with all applicable local, state, & federal laws and regulations Pollution liability insurance	Std T&C 450 Fact Sheet Series 17000 Std T&C 660-3 Approved Environmental

	EVET approval of supplier	Vendor List (Contact RCM Representative)
Emergency response	Hazmat/waste release/spill fire safety emergency	Fact Sheet Series 17000 Building Emergency Operations Plan (EOP) (specific to and located on Premises)
Contract labor/outsourcing for services with environmental implications to be performed on BellSouth Premises (e.g., disposition of hazardous material/waste; maintenance of storage tanks)	Compliance with all applicable local, state, & federal laws and regulations Performance of services in accordance with BST's environmental M&Ps Insurance	Std T&C 450 Std T&C 450-B (Contact RCM Representative for copy of appropriate E/S M&Ps.) Std T&C 660
Transportation of hazardous material	Compliance with all applicable local, state, & federal laws and regulations Pollution liability insurance EVET approval of supplier	Std T&C 450 Fact Sheet Series 17000 Std T&C 660-3 Approved Environmental Vendor List (Contact RCM Representative)
Maintenance/operations work which may produce a waste Other maintenance work	Compliance with all applicable local, state, & federal laws and regulations Protection of BST employees and equipment	Std T&C 450 29CFR 1910.147 (OSHA Standard) 29CFR 1910 Subpart O (OSHA Standard)
Janitorial services	All waste removal and disposal must conform to all applicable federal, state and local regulations All Hazardous Material and Waste Asbestos notification and protection of employees and	Procurement Manager (CRES Related Matters)-BST Supply Chain Services Fact Sheet Series 17000 GU-BTEN-001BT, Chapter 3 BSP 010-170-001BS

	equipment	(Hazcom)
Manhole cleaning	Compliance with all applicable local, state, & federal laws and regulations Pollution liability insurance EVET approval of supplier	Std T&C 450 Fact Sheet 14050 BSP 620-145-011PR Issue A, August 1996 Std T&C 660-3 Approved Environmental Vendor List (Contact RCM Representative)
Removing or disturbing building materials that may contain asbestos	Asbestos work practices	GU-BTEN-001BT, Chapter 3 For questions regarding removing or disturbing materials that contain asbestos, call the BellSouth Building Service Center: AL, MS, TN, KY & LA (local area code) 557-6194 FL, GA, NC & SC (local area code) 780-2740

3. DEFINITIONS

Generator. Under RCRA, the person whose act produces a Hazardous Waste, as defined in 40 CFR 261, or whose act first causes a Hazardous Waste to become subject to regulation. The Generator is legally responsible for the proper management and disposal of Hazardous Wastes in accordance with regulations.

Hazardous Chemical. As defined in the U.S. Occupational Safety and Health (OSHA) hazard communication standard (29 CFR 1910.1200), any chemical which is a health hazard or physical hazard.

Hazardous Waste. As defined in Section 1004 of RCRA.

Imminent Danger. Any conditions or practices at a Premises which are such that a danger exists which could reasonably be expected to cause immediate death or serious harm to people or immediate significant damage to the environment or natural resources.

Spill or Release. As defined in Section 101 of CERCLA.

4. ACRONYMS

RCM – Regional Collocation Manager (f/k/a Account Team Collocation Coordinator)

BST – BellSouth Telecommunications

Version 1Q03: 02/28/03

CRES – Corporate Real Estate and Services (formerly PS&M)

DEC/LDEC - Department Environmental Coordinator/Local Department Environmental Coordinator

E/S – Environmental/Safety

EVET - Environmental Vendor Evaluation Team

GU-BTEN-001BT - BellSouth Environmental Methods and Procedures

NESC - National Electrical Safety Codes

P&SM - Property & Services Management

Std T&C - Standard Terms & Conditions

Attachment 4

Remote Site Physical Collocation

BELLSOUTH

REMOTE SITE PHYSICAL COLLOCATION

1. Scope of Attachment

1.1 Scope of Attachment. The rates, terms, and conditions contained within this Attachment shall only apply when DPI is occupying the collocation space as a sole occupant or as a Host within a Remote Site Location ("Remote Collocation Space") pursuant to this Attachment.

1.2 Right to occupy. BellSouth shall offer to DPI Remote Collocation Space on rates, terms, and conditions that are just, reasonable, non-discriminatory and consistent with the rules of the Federal Communications Commission ("FCC"). Subject to the rates, terms, and conditions of this Attachment, where space is available and collocation is technically feasible, BellSouth will allow DPI to occupy that certain area designated by BellSouth within a BellSouth Remote Site Location, or on BellSouth property upon which the BellSouth Remote Site Location is located, of a size, which is specified by DPI and agreed to by BellSouth. BellSouth Remote Site Locations include cabinets, huts, and controlled environmental vaults owned or leased by BellSouth that house BellSouth Network Facilities. To the extent this Attachment does not include all the necessary rates, terms and conditions for BellSouth Remote Site Locations other than cabinets, huts and controlled environmental vaults, the Parties will negotiate said rates, terms, and conditions upon request for collocation at BellSouth Remote Site Locations other than those specified above.

1.3 Space Reservation.

1.3.1 In all states other than Florida, the number of racks/bays specified by DPI may contemplate a request for space sufficient to accommodate DPI's growth within a two-year period.

1.3.2 In the state of Florida, the number of racks/bays specified by DPI may contemplate a request for space sufficient to accommodate DPI's growth within an eighteen (18) month period.

1.3.3 Neither BellSouth nor any of BellSouth's affiliates may reserve space for future use on more preferential terms than those set forth above.

1.4 Third Party Property. If the Premises, or the property on which it is located, is leased by BellSouth from a Third Party or otherwise controlled by a Third Party, special considerations and intervals may apply in addition to the terms and conditions of this

Attachment. Additionally, where BellSouth notifies DPI that BellSouth's agreement with a Third Party does not grant BellSouth the ability to provide access and use rights to others, upon DPI's request, BellSouth will use its best efforts to obtain the owner's consent and to otherwise secure such rights for DPI. DPI agrees to reimburse BellSouth for the reasonable and demonstrable costs incurred by BellSouth in obtaining such rights for DPI. In cases where a Third Party agreement does not grant BellSouth the right to provide access and use rights to others as contemplated by this Attachment and BellSouth, despite its best efforts, is unable to secure such access and use rights for DPI as above, DPI shall be responsible for obtaining such permission to access and use such property. BellSouth shall cooperate with DPI in obtaining such permission.

1.5 Space Reclamation. In the event of space exhaust within a Remote Site Location, BellSouth may include in its documentation for the Petition for Waiver filing any unutilized space in the Remote Site Location. DPI will be responsible for any justification of unutilized space within its Remote Collocation Space, if the Commission requires such justification.

1.6 Use of Space. DPI shall use the Remote Collocation Space for the purposes of installing, maintaining and operating DPI's equipment (to include testing and monitoring equipment) necessary for interconnection with BellSouth services and facilities or for accessing BellSouth unbundled network elements (UNEs) for the provision of telecommunications services, as specifically set forth in this Agreement. The Remote Collocation Space may be used for no other purposes except as specifically described herein or in any amendment hereto.

1.7 Rates and charges. DPI agrees to pay the rates and charges identified in Exhibit B attached hereto.

1.8 If any due date contained in this Attachment falls on a weekend or National holiday, then the due date will be the next business day thereafter. For intervals of ten (10) calendar days or less National holidays will be excluded.

1.9 The Parties agree to comply with all applicable federal, state, county, local and administrative laws, rules, ordinances, regulations and codes in the performance of their obligations hereunder.

2. Space Availability Report

2.1 Space Availability Report. Upon request from DPI, BellSouth will provide a written report ("Space Availability Report"), describing in detail the space that is available for collocation and specifying the amount of Remote Collocation Space available at the Remote Site Location requested, the number of collocators present at the Remote Site Location, any modifications in the use of the space since the last report on the Remote Site Location requested and the measures BellSouth is taking to make additional space

available for collocation arrangements. A Space Availability Report does not reserve space at the Remote Site Location.

2.1.1 The request from DPI for a Space Availability Report must be written and must include the Common Language Location Identification ("CLLI") code for both the Remote Site Location and the serving wire center. The CLLI code information for the serving wire center is located in the National Exchange Carrier Association (NECA) Tariff FCC No. 4. If DPI is unable to obtain the CLLI code for the Remote Site Location from, for example, a site visit to the remote site, DPI may request the CLLI code from BellSouth. To obtain a CLLI code for a Remote Site Location directly from BellSouth, DPI should submit to BellSouth a Remote Site Interconnection Request for the serving wire center CLLI code prior to submitting its request for a Space Availability Report. DPI should complete all the requested information and submit the Request to BellSouth. BellSouth will bill the applicable fee upon receipt of the request.

2.1.2 BellSouth will respond to a request for a Space Availability Report for a particular Remote Site Location within ten (10) calendar days of receipt of such request. BellSouth will make best efforts to respond in ten (10) calendar days to such a request when the request includes from two (2) to five (5) Remote Site Locations within the same state. The response time for requests of more than five (5) Remote Site Locations shall be negotiated between the Parties. If BellSouth cannot meet the ten (10) calendar day response time, BellSouth shall notify DPI and inform DPI of the time frame under which it can respond.

2.2 Remote Terminal information. Upon request, BellSouth will provide DPI with the following information concerning BellSouth's remote terminals: (i) the address of the remote terminal; (ii) the CLLI code of the remote terminal; (iii) the carrier serving area of the remote terminal; (iv) the designation of which remote terminals subtend a particular central office; and (v) the number and address of customers that are served by a particular remote terminal.

2.2.1 BellSouth will provide this information on a first come, first served basis within thirty (30) calendar days of a DPI request subject to the following conditions: (i) the information will only be provided on a CD in the same format in which it appears in BellSouth's systems; (ii) the information will only be provided for each serving wire center designated by DPI, up to a maximum of thirty (30) wire centers per DPI request per month per state, and up to for a maximum of one hundred twenty (120) wire centers total per month per state for all CLECs; and (iii) DPI agrees to pay the costs incurred by BellSouth in providing the information.

3. Collocation Options

3.1 Cageless. BellSouth shall allow DPI to collocate DPI's equipment and facilities without requiring the construction of a cage or similar structure. BellSouth shall allow DPI to have direct access to DPI's equipment and facilities in accordance with Section

5.8. BellSouth shall make cageless collocation available in single rack/bay increments. Except where DPI's equipment requires special technical considerations (e.g., special cable racking or isolated ground plane), BellSouth shall assign cageless Remote Collocation Space in conventional equipment rack lineups where feasible. For equipment requiring special technical considerations, DPI must provide the equipment layout, including spatial dimensions for such equipment pursuant to generic requirements contained in Telcordia GR-63-Core, and shall be responsible for compliance with all special technical requirements associated with such equipment pursuant to Section 7.6 following.

3.2 Caged. At DPI's expense, DPI may arrange with a Supplier certified by BellSouth ("BellSouth Certified Supplier") to construct a collocation arrangement enclosure, where technically feasible as that term has been defined by the FCC, in accordance with BellSouth's Technical References (TR) ("Specifications") prior to starting equipment installation. BellSouth will provide Specifications upon request. DPI's BellSouth Certified Supplier shall be responsible for filing and receiving any and all necessary permits and/or licenses for such construction. BellSouth shall cooperate with DPI and provide, at DPI's expense, the documentation, including existing building architectural drawings, enclosure drawings, and Specifications required and necessary for DPI's BellSouth Certified Supplier to obtain the zoning, permits and/or other licenses. DPI's BellSouth Certified Supplier shall bill DPI directly for all work performed for DPI pursuant to this Attachment and BellSouth shall have no liability for nor responsibility to pay such charges imposed by DPI's BellSouth Certified Supplier. DPI must provide the local BellSouth Remote Site Location contact with two Access Keys used to enter the locked enclosure. Except in case of emergency, BellSouth will not access DPI's locked enclosure prior to notifying DPI at least forty-eight (48) hours before access to the Remote Site Location is required. Upon request, BellSouth shall construct the enclosure for DPI.

3.2.1 BellSouth may elect to review DPI's plans and specifications prior to allowing construction to start to ensure compliance with BellSouth's Specifications. Notification to DPI indicating BellSouth's desire to execute this review will be provided in BellSouth's response to the Application, if DPI has indicated their desire to construct their own enclosure. If DPI's Application does not indicate their desire to construct their own enclosure, but their firm order does indicate their desire to construct their own enclosure, then notification to review will be given within ten (10) calendar days after the Firm Order date. BellSouth shall complete its review within fifteen (15) calendar days after the receipt of the plans and specifications. Regardless of whether or not BellSouth elects to review DPI's plans and specifications, BellSouth reserves the right to inspect the enclosure after construction to make sure it is constructed according to the submitted plans and specifications and/or BellSouth's Specifications, as applicable. BellSouth shall require DPI to remove or correct within seven (7) calendar days at DPI's expense any structure that does not meet these plans and specifications or, where applicable, BellSouth's Specifications.

3.3 Shared Collocation. DPI may allow other telecommunications carriers to share DPI's Remote Collocation Space pursuant to terms and conditions agreed to by DPI ("Host") and other telecommunications carriers ("Guests") and pursuant to this Section, except where the BellSouth Remote Site Location is located within a leased space and BellSouth is prohibited by said lease from offering such an option or is located on property for which BellSouth holds an easement and such easement does not permit such an option. DPI shall notify BellSouth in writing upon execution of any agreement between the Host and its Guest within ten (10) calendar days of its execution and prior to any Firm Order. Further, such notice shall include the name of the Guest(s) and the term of the agreement, and shall contain a certification by DPI that said agreement imposes upon the Guest(s) the same terms and conditions for Remote Collocation Space as set forth in this Attachment between BellSouth and DPI.

3.3.1 DPI, as the Host, shall be the sole interface and responsible Party to BellSouth for assessment of rates and charges contained within this Attachment and for the purposes of ensuring that the safety and security requirements of this Attachment are fully complied with by the Guest, its employees and agents. BellSouth shall provide DPI with a proration of the costs of the Remote Collocation Space based on the number of collocators and the space used by each with a minimum charge of one (1) bay/rack per Host/Guest. In those instances where the Host permits a Guest to use a shelf within the Host's bay, BellSouth will not prorate the cost of the bay. In all states other than Florida, and in addition to the foregoing, DPI shall be the responsible party to BellSouth for the purpose of submitting applications for bay/rack placement for the Guest. In Florida the Guest may directly submit bay/rack placement applications using the Host's access carrier name abbreviation (ACNA). A separate Guest application shall require the assessment of an Application Fee, as set forth in Exhibit B, which will be charged to the Host. BellSouth shall bill this nonrecurring fee on the date that BellSouth provides it written response ("Application Response").

3.3.2 Notwithstanding the foregoing, the Guest may arrange directly with BellSouth for the provision of the interconnecting facilities between BellSouth and the Guest and for the provision of the services and access to unbundled network elements. The bill for these interconnecting facilities, services and access to UNEs will be charged to the Guest pursuant to the applicable tariff or the Guest's Interconnection Agreement with BellSouth.

3.3.3 DPI shall indemnify and hold harmless BellSouth from any and all claims, actions, causes of action, of whatever kind or nature arising out of the presence of DPI's Guest(s) in the Remote Collocation Space except to the extent caused by BellSouth's sole negligence, gross negligence, or willful misconduct.

3.4 Adjacent Collocation. Subject to technical feasibility and space availability, BellSouth will permit adjacent Remote Site collocation arrangements ("Remote Site Adjacent Arrangement") on the property on which the Remote Site is located when space within the Remote Site Location is legitimately exhausted, where the Remote Site Adjacent

Arrangement does not interfere with access to existing or planned structures or facilities on the Remote Site Location property. The Remote Site Adjacent Arrangement shall be constructed or procured by DPI and in conformance with BellSouth's design and construction Specifications. Further, DPI shall construct, procure, maintain and operate said Remote Site Adjacent Arrangement(s) pursuant to all of the terms and conditions set forth in this Attachment. Rates shall be negotiated at the time of the application for the Remote Site Adjacent Arrangement.

3.4.1 Should DPI elect Adjacent Collocation, DPI must arrange with a BellSouth Certified Supplier to construct a Remote Site Adjacent Arrangement structure in accordance with BellSouth's Specifications. Where local building codes require enclosure specifications more stringent than BellSouth's Specifications, DPI and DPI's BellSouth Certified Supplier must comply with local building code requirements. DPI's BellSouth Certified Supplier shall be responsible for filing and receiving any and all necessary zoning, permits and/or licenses for such construction. DPI's BellSouth Certified Supplier shall bill DPI directly for all work performed for DPI pursuant to this Attachment and BellSouth shall have no liability for nor responsibility to pay such charges imposed by DPI's BellSouth Certified Supplier. DPI must provide the local BellSouth Remote Site Location contact with two cards, keys or other access device used to enter the locked enclosure. Except in cases of emergency, BellSouth shall not access DPI's locked enclosure prior to notifying DPI at least forty-eight (48) hours or two (2) business days, whichever is greater, before access to the locked enclosure is required.

3.4.2 DPI must submit its plans and specifications to BellSouth with its Firm Order. BellSouth shall review DPI's plans and specifications prior to construction of a Remote Site Adjacent Arrangement(s) to ensure compliance with BellSouth's Specifications. BellSouth shall complete its review within fifteen (15) calendar days after receipt of plans and specifications. BellSouth may inspect the Remote Site Adjacent Arrangement(s) during and after construction to confirm it is constructed according to the submitted plans and specifications. BellSouth shall require DPI to remove or correct within seven (7) calendar days at DPI's expense any structure that does not meet these plans and specifications or, where applicable, BellSouth's Specifications.

3.4.3 DPI shall provide a concrete pad, the structure housing the arrangement, heating/ventilation/air conditioning ("HVAC"), lighting, and all facilities that connect the structure (i.e. racking, conduits, etc.) to the BellSouth point of demarcation. At DPI's option, and where the local authority having jurisdiction permits, BellSouth shall provide an AC power source and access to physical collocation services and facilities subject to the same nondiscriminatory requirements as applicable to any other physical collocation arrangement. In Alabama and Louisiana, BellSouth will provide DC power to Adjacent Collocation sites where technically feasible, as that term has been defined by the FCC, and subject to individual case basis pricing. DPI's BellSouth Certified Supplier shall be responsible, at DPI's expense, for filing and receiving any and all

necessary zoning, permits and/or licenses for such arrangement. BellSouth shall allow Shared Collocation within a Remote Site Adjacent Arrangement pursuant to the terms and conditions set forth herein.

3.5 Co-carrier cross-connect (CCXC). The primary purpose of collocation is for a collocated telecommunications carrier to interconnect with BellSouth's network or to access BellSouth's unbundled network elements for the provision of telecommunications services within a BellSouth Premises. BellSouth will permit DPI to interconnect between its virtual or physical collocation arrangements and those of another collocated telecommunications carrier within the same Remote Site Location. Both DPI's agreement and the other collocated telecommunications carrier's agreement must contain rates, terms and conditions for CCXC language. At no point in time shall DPI use the Remote Collocation Space for the sole or primary purpose of cross connecting to other collocated telecommunications carriers.

3.5.1 DPI must use a BellSouth Certified Supplier to place the CCXC. The CCXC shall be provisioned through facilities owned by DPI. Such connections to other collocated telecommunications carriers may be made using either optical or electrical facilities. In cases where DPI's equipment and the equipment of the other collocated telecommunications carrier are located in contiguous caged Collocation Spaces, DPI will have the option of using DPI's own technicians to deploy co-carrier cross connects using either electrical or optical facilities between the sets of equipment and construct its own dedicated cable support structure. DPI shall deploy such optical or electrical connections directly between its own facilities and the facilities of other collocated telecommunications carriers without being routed through BellSouth equipment. DPI shall not provision CCXC on any BellSouth distribution frame, POT (Point of Termination) Bay, DSX (Digital System Cross-connect) or LGX (Light Guide Cross-connect). DPI is responsible for ensuring the integrity of the signal.

3.5.2 DPI shall be responsible for providing a letter of authorization ("LOA") to BellSouth from the other collocated telecommunications carrier prior to installing the CCXC. DPI-provisioned CCXC shall utilize common cable support structure. There will be a recurring charge per linear foot, per cable, of common cable support structure used. In the case of two contiguous caged collocation arrangements, DPI will have the option of using DPI's own technicians to construct its own dedicated support structure.

3.5.3 To order CCXCs, DPI must submit an Application. If no modification to the Remote Collocation Space is requested other than the placement of CCXCs, the Subsequent Application Fee for CCXCs, as defined in Exhibit B, will apply. If modifications in addition to the placement of CCXCs are requested, the Application Fee will apply. This nonrecurring fee will be billed by BellSouth on the date that BellSouth provides an Application Response.

4. **Occupancy**

4.1 Occupancy. BellSouth will notify DPI in writing that the Remote Collocation Space is ready for occupancy ("Space Ready Date"). DPI will schedule and complete an acceptance walkthrough of each Remote Collocation Space with BellSouth within fifteen (15) calendar days of BellSouth's notifying DPI that Remote Collocation Space is ready for occupancy ("Space Ready Date"). BellSouth will correct any deviations to DPI's original or jointly amended requirements within seven (7) calendar days after the walkthrough, unless the Parties jointly agree upon a different time frame, and BellSouth shall establish a new Space Ready Date. Another acceptance walkthrough will then be scheduled and conducted within fifteen (15) calendar days of the new Space Ready Date. This follow-up acceptance walkthrough will be limited to those items identified in the initial walkthrough. If DPI has met the fifteen (15) calendar day interval(s), billing will begin upon the date of DPI's acceptance of the Collocation Space ("Space Acceptance Date"). In the event that DPI fails to complete an acceptance walkthrough within this fifteen (15) calendar day interval, the Remote Collocation Space shall be deemed accepted by DPI on the Space Ready Date and billing will commence from that date. If DPI decides to occupy the space prior to the Space Ready Date, the date DPI occupies the space becomes the new Space Acceptance Date and billing begins from that date. DPI must notify BellSouth in writing that collocation equipment installation is complete and is operational with BellSouth's network. BellSouth may, at its option, not accept orders for cross connects until receipt of such notice. For purposes of this paragraph, DPI's telecommunications equipment will be deemed operational when cross-connected to BellSouth's network for the purpose of service provision.

4.2 Termination of Occupancy. In addition to any other provisions addressing termination of occupancy in this Attachment, DPI may terminate occupancy in a particular Remote Collocation Space by submitting an Application requesting termination of occupancy; such termination shall be effective upon BellSouth's acceptance of the Space Relinquishment Form. Billing for monthly recurring charges will cease on the date <customer short name> and BellSouth conduct an inspection of the terminated space and jointly sign off on the Space Relinquishment Form or on the date that <customer short name> signs off on the Space Relinquishment Form and sends the form to BellSouth if a subsequent inspection of the terminated space by BellSouth reveals no discrepancies. If the subsequent inspection by BellSouth reveals discrepancies, billing will cease on the date that BellSouth and <customer short name> jointly conduct an inspection which confirms that <customer short name> has corrected the discrepancies. An Application Fee will not apply for termination of occupancy. BellSouth may terminate DPI's right to occupy the Remote Collocation Space in the event DPI fails to comply with any provision of this Agreement.

4.2.1 Upon termination of occupancy, DPI at its expense shall remove its equipment and other property from the Remote Collocation Space. DPI shall have thirty (30) calendar days from the Bona Fide Firm Order ("BFFO") Application Date

("Termination Date") to complete such removal, including the removal of all equipment and facilities of DPI's Guest(s), unless DPI's Guest(s) has assumed responsibility for the Remote Collocation Space housing the Guest(s)'s equipment and executed the documentation required by BellSouth prior to such removal date. DPI shall continue payment of monthly fees to BellSouth until such date as DPI, and if applicable DPI's Guest(s), has fully vacated the Remote Collocation Space and the Space Relinquish Form has been accepted by BellSouth. Should DPI or DPI's Guest(s) fail to vacate the Remote Collocation Space within thirty (30) calendar days from the Termination Date, BellSouth shall have the right to remove the equipment and dispose of the equipment and other property of DPI or DPI's Guest(s), in any manner that BellSouth deems fit, at DPI's expense and with no liability whatsoever for DPI's or DPI's Guest(s)'s property. Upon termination of DPI's right to occupy Remote Collocation Space, the Remote Collocation Space will revert back to BellSouth, and DPI shall surrender such Remote Collocation Space to BellSouth in the same condition as when first occupied by the DPI except for ordinary wear and tear unless otherwise agreed to by the Parties. For CEVs and huts DPI's BellSouth Certified Supplier shall be responsible for updating and making any necessary changes to BellSouth's records as required by BellSouth's Specifications including but not limited to Record Drawings and ERMA Records. DPI shall be responsible for the cost of removing any DPI constructed enclosure, together with all support structures (e.g., racking, conduits, or power cables), at the termination of occupancy and restoring the grounds to their original condition.

5. Use of Remote Collocation Space

5.1 Equipment Type. BellSouth permits the collocation of any type of equipment necessary for interconnection to BellSouth's network or for access to BellSouth's unbundled network elements in the provision of telecommunications services, as the term "necessary" is defined by FCC 47 C.F.R. Section 51.323 (b). The primary purpose and function of any equipment collocated in a Remote Collocation Space must be for interconnection to BellSouth's network or for access to BellSouth's unbundled network elements in the provision of telecommunications services.

5.1.1 Examples of equipment that would not be considered necessary include but are not limited to: traditional circuit switching equipment, equipment used exclusively for call-related databases, computer servers used exclusively for providing information services, operations support system (OSS) equipment used to support collocated telecommunications carrier network operations, equipment that generates customer orders, manages trouble tickets or inventory, or stores customer records in centralized databases, etc. BellSouth will determine upon receipt of an application if the requested equipment is necessary based on the criteria established by the FCC. Multifunctional equipment placed on BellSouth's Premises must not place any greater relative burden on BellSouth's property than comparable single-function equipment. BellSouth reserves the right to permit collocation of any equipment on a nondiscriminatory basis.

5.1.2 Such equipment must, at a minimum, meet the following Telcordia Network Equipment Building Systems (NEBS) General Equipment Requirements: Criteria Level 3 requirements as outlined in the Telcordia Special Report SR-3580, Issue 1. Except where otherwise required by a Commission, BellSouth shall comply with the applicable FCC rules relating to denial of collocation based on DPI's failure to comply with this Section.

5.1.2.1 All DPI equipment installation shall comply with BellSouth TR 73503-11h, "Grounding - Engineering Procedures". Metallic cable sheaths and metallic strength members of optical fiber cables as well as the metallic cable sheaths of all copper conductor cables shall be bonded to the designated grounding bus for the Remote Site Location. All copper conductor pairs, working and non-working, shall be equipped with a solid-state protector unit (over-voltage protection only), which has been listed by a nationally recognized testing laboratory.

5.1.3 DPI shall identify to BellSouth whenever DPI submits a Method of Procedure ("MOP") adding equipment to DPI's Remote Collocation Space all UCC-1 lien holders or other entities that have a financial interest, secured or otherwise, in the equipment in DPI's Remote Collocation Space. DPI shall submit a copy of the list of any lien holders or other entities that have a financial interest to DPI's ATCC Representative.

5.2 DPI shall not use the Remote Collocation Space for marketing purposes nor shall it place any identifying signs or markings in the area surrounding the Remote Collocation Space or on the grounds of the Remote Site Location.

5.3 DPI shall place a plaque or other identification affixed to DPI's equipment to identify DPI's equipment, including a list of emergency contacts with telephone numbers.

5.4 Entrance Facilities. DPI may elect to place DPI-owned or DPI-leased fiber entrance facilities into the Remote Collocation Space. BellSouth will designate the point of interconnection at the Remote Site Location housing the Remote Collocation Space, which is physically accessible by both Parties. DPI will provide and place copper cable through conduit from the Remote Collocation Space to the Feeder Distribution Interface to the splice location of sufficient length for splicing by BellSouth. DPI must contact BellSouth for instructions prior to placing the entrance facility cable. DPI is responsible for maintenance of the entrance facilities.

5.4.1 Shared Use. DPI may utilize spare capacity on an existing interconnector entrance facility for the purpose of providing an entrance facility to DPI's collocation arrangement within the same BellSouth Remote Site Location. BellSouth shall allow splicing to the entrance facility, provided that the fiber is non-working fiber. DPI must arrange with BellSouth in accordance with BellSouth's Special Construction Procedures, RL93-11-030BT, and provide a LOA from the other telecommunications carrier for BellSouth to splice the DPI provided riser cable to the spare capacity on the

entrance facility. If DPI desires to allow another telecommunications carrier to use its entrance facilities, then that telecommunications carrier must arrange with BellSouth in accordance with BellSouth's Special Construction Procedures, RL93-11-030BT, and provide a LOA from DPI for BellSouth to splice that telecommunications carrier's provided riser cable to the spare capacity on DPI's entrance facility.

5.5 Demarcation Point. BellSouth will designate the point(s) of demarcation between DPI's equipment and/or network and BellSouth's network. Each Party will be responsible for maintenance and operation of all equipment/facilities on its side of the demarcation point. DPI or its agent must perform all required maintenance to DPI equipment/facilities on its side of the demarcation point, pursuant to Section 5.6, following.

5.6 DPI's Equipment and Facilities. DPI, or if required by this Attachment, DPI's BellSouth Certified Supplier, is solely responsible for the design, engineering, installation, testing, provisioning, performance, monitoring, maintenance and repair of the equipment and facilities used by DPI which must be performed in compliance with all applicable BellSouth Specifications. Such equipment and facilities may include but are not limited to cable(s), equipment, and point of termination connections. DPI and its selected BellSouth Certified Supplier must follow and comply with all BellSouth requirements outlined in BellSouth's TR 73503, TR 73519, TR 73572, and TR 73564.

5.7 BellSouth's Access to Remote Collocation Space. From time to time BellSouth may require access to the Remote Collocation Space. BellSouth retains the right to access the Remote Collocation Space for the purpose of making BellSouth equipment and Remote Site Location modifications. Except in case of emergency, BellSouth will give notice to DPI at least forty-eight (48) hours before access to the Remote Collocation Space is required. DPI may elect to be present whenever BellSouth performs work in the Collocation Space. The Parties agree that DPI will not bear any of the expense associated with this work.

5.8 Access. Pursuant to Section 12, DPI shall have access to the Remote Collocation Space twenty-four (24) hours a day, seven (7) days a week. DPI agrees to provide the name and social security number or date of birth or driver's license number of each employee, supplier, or agents of DPI or DPI's Guests to be provided with access keys or cards ("Access Keys") prior to the issuance of said Access Keys using form RF-2906-C "CLEC and CLEC Certified Supplier Access Request and Acknowledgement". Key acknowledgement forms, "Collocation Acknowledgement Sheet" for access cards and "Key Acknowledgement Form" for keys, must be signed by DPI and returned to BellSouth Access Management within fifteen (15) calendar days of DPI's receipt. Failure to return properly acknowledged forms will result in the holding of subsequent requests until acknowledgements are current. Access Keys shall not be duplicated under any circumstances. DPI agrees to be responsible for all Access Keys and for the return of all said Access Keys in the possession of DPI's employees, suppliers, Guests, or agents after termination of the employment

relationship, contractual obligation with DPI or upon the termination of this Attachment or the termination of occupancy of an individual Remote Collocation Space arrangement.

5.8.1 BellSouth will permit one accompanied site visit to DPI's designated collocation arrangement location after receipt of the BFFO without charge to DPI. DPI must submit to BellSouth the completed Access Control Request Form for all employees or agents requiring access to the BellSouth Remote Site Location a minimum of thirty (30) calendar days prior to the date DPI desires access to the Remote Collocation Space. In order to permit reasonable access during construction of the Remote Collocation Space, DPI may submit such a request at any time subsequent to BellSouth's receipt of the BFFO. In the event DPI desires access to the Remote Collocation Space after submitting such a request but prior to access being approved, in addition to the first accompanied free visit, BellSouth shall permit DPI to access the Remote Collocation Space accompanied by a security escort at DPI's expense. DPI must request escorted access at least three (3) business days prior to the date such access is desired.

5.9 Lost or Stolen Access Keys. DPI shall notify BellSouth in writing immediately in the case of lost or stolen Access Keys. Should it become necessary for BellSouth to re-key Remote Site Locations or deactivate a card as a result of a lost Access Key(s) or for failure to return an Access Key(s), DPI shall pay for all reasonable costs associated with the re-keying or deactivating the card.

5.10 Interference or Impairment. Notwithstanding any other provisions of this Attachment, DPI shall not use any product or service provided under this Agreement, any other service related thereto or used in combination therewith, or place or use any equipment and facilities in any manner that 1) significantly degrades, interferes with or impairs service provided by BellSouth or by any other entity or any person's use of its telecommunications service; 2) endangers or damages the equipment, facilities or other property of BellSouth or of any other entity or person; 3) compromises the privacy of any communications; or 4)creates an unreasonable risk of injury or death to any individual or to the public. If BellSouth reasonably determines that any equipment or facilities of DPI violates the provisions of this paragraph, BellSouth shall give written notice to DPI, which notice shall direct DPI to cure the violation within forty-eight (48) hours of DPI's actual receipt of written notice or, at a minimum, to commence curative measures within 24 hours and to exercise reasonable diligence to complete such measures as soon as possible thereafter. After receipt of the notice, the Parties agree to consult immediately and, if necessary, to inspect the arrangement.

5.10.1 Except in the case of the deployment of an advanced service which significantly degrades the performance of other advanced services or traditional voice band services, if DPI fails to take curative action within forty-eight (48) hours or if the violation is of a character which poses an immediate and substantial threat of damage to property, injury or death to any person, or any other significant degradation,

interference or impairment of BellSouth's or any other entity's service, then and only in that event BellSouth may take such action as it deems appropriate to correct the violation, including without limitation the interruption of electrical power to DPI's equipment. BellSouth will endeavor, but is not required, to provide notice to DPI prior to taking such action and shall have no liability to DPI for any damages arising from such action, except to the extent that such action by BellSouth constitutes willful misconduct.

5.10.2 For purposes of this section, the term significantly degrade shall mean an action that noticeably impairs a service from a user's perspective. In the case of the deployment of an advanced service which significantly degrades the performance of other advanced services or traditional voice band services and DPI fails to take curative action within forty-eight (48) hours then BellSouth will establish before the Commission that the technology deployment is causing the significant degradation. Any claims of network harm presented to DPI or, if subsequently necessary, the Commission must be supported with specific and verifiable information. Where BellSouth demonstrates that a deployed technology is significantly degrading the performance of other advanced services or traditional voice band services, DPI shall discontinue deployment of that technology and migrate its customers to technologies that will not significantly degrade the performance of other such services. Where the only degraded service itself is a known disturber, and the newly deployed technology satisfies at least one of the criteria for a presumption that is acceptable for deployment under Section 47 C.F.R. 51.230, the degraded service shall not prevail against the newly-deployed technology.

5.11 Personalty and its Removal. Facilities and equipment placed by DPI in the Remote Collocation Space shall not become a part of the Remote Site Location, even if nailed, screwed or otherwise fastened to the Remote Collocation Space but shall retain their status as personalty and may be removed by DPI at any time. Any damage caused to the Remote Collocation Space by DPI's employees, agents or representatives shall be promptly repaired by DPI at its expense.

5.11.1 If DPI decides to remove equipment from its Remote Collocation Space and the removal requires no physical changes, BellSouth will bill DPI an Administrative Only Application Fee as set forth in Exhibit B for these changes. This nonrecurring fee will be billed on the date that BellSouth provides an Application Response.

5.12 Alterations. In no case shall DPI or any person acting on behalf of DPI make any rearrangement, modification, improvement, addition, or other alteration which could affect in any way space, power, HVAC, and/or safety considerations to the Remote Collocation Space or the BellSouth Remote Site Location without the written consent of BellSouth, which consent shall not be unreasonably withheld. The cost of any specialized alterations shall be paid by DPI. Any such material rearrangement, modification, improvement, addition, or other alteration shall require an application

and Application Fee. BellSouth will bill the nonrecurring fee on the date that BellSouth provides an Application Response.

5.13 Upkeep of Remote Collocation Space. DPI shall be responsible for the general upkeep and cleaning of the Remote Collocation Space. DPI shall be responsible for removing any DPI debris from the Remote Collocation Space and from in and around the Remote Site Location on each visit.

6. Ordering and Preparation of Remote Collocation Space

6.1 Should any state or federal regulatory agency impose procedures or intervals applicable to DPI and BellSouth that are different from procedures or intervals set forth in this Section, whether now in effect or that become effective after execution of this Agreement, those procedures or intervals shall supersede the requirements set forth herein for that jurisdiction for all applications submitted for the first time after the effective date thereof

6.2 Remote Site Application. When DPI or DPI's Guest(s) desires to install a bay/rack in a Remote Site Location, DPI shall submit to BellSouth a Physical Expanded Interconnection Application Document ("Application"). The application is Bona Fide when it is complete and accurate, meaning that all required fields on the application are completed with the appropriate type of information. An application fee will apply which will be billed on the date that BellSouth provides an Application Response. The placement of an additional bay/rack at a later date will be treated in the same fashion and an application will be required. The installation of additional shelves/equipment, subject to the restrictions contained in Section 5.10, within an existing bay/rack does not require an application.

6.3 Availability of Space. Upon submission of an application, BellSouth will permit DPI to physically collocate, pursuant to the terms of this Attachment, at any BellSouth Remote Site Location, unless BellSouth has determined that there is no space available due to space limitations or that collocation at the Remote Site Location is not practical for technical reasons. In the event space is not immediately available at a Remote Site Location, BellSouth reserves the right to make additional space available, in which case the conditions in Section 7 shall apply, or BellSouth may elect to deny space in accordance with this Section in which case virtual or adjacent collocation options may be available. If the amount of space requested is not available, BellSouth will notify DPI of the amount that is available.

6.4 Space Availability Notification.

6.4.1 Unless otherwise specified, BellSouth will respond to an application within ten (10) calendar days as to whether space is available or not available within a BellSouth Remote Site Location. BellSouth will also respond as to whether the application is Bona Fide and if it is not Bona Fide the items necessary to cause the application to become Bona Fide. If the amount of space requested is not available, BellSouth will

notify DPI of the amount of space that is available and no Application Fee shall apply. When BellSouth's response includes an amount of space less than that requested by DPI or differently configured no application fee shall apply. If DPI decides to accept the available space, DPI must resubmit its application to reflect the actual space available prior to submitting a BFFO and an application fee will be billed.

6.4.2 BellSouth will respond to a Florida application within fifteen (15) calendar days as to whether space is available or not available within a BellSouth Remote Site Location. BellSouth will also respond as to whether the application is Bona Fide and if it is not Bona Fide the items necessary to cause the application to become Bona Fide. If a lesser amount of space than requested is available, BellSouth will provide an Application Response for the amount of space that is available and an Application Fee will be billed by BellSouth on the date that BellSouth provides an Application Response. When BellSouth's Application Response includes an amount of space less than that requested by DPI or differently configured, if DPI decides to accept the available space, DPI must amend its application to reflect the actual space available prior to submitting a BFFO.

6.4.3 BellSouth will respond to a Louisiana application within ten (10) calendar days for space availability for one (1) to ten (10) applications; fifteen (15) calendar days for eleven (11) to twenty (20) applications; and for more than twenty (20) applications, the response interval is increased by five (5) calendar days for every five additional applications received within five (5) business days. If the amount of space requested is not available, BellSouth will notify DPI of the amount of space that is available and no Application Fee will apply. When BellSouth's response includes an amount of space less than that requested by DPI or differently configured no application fee shall apply. If DPI decides to accept the available space, DPI must resubmit its application to reflect the actual space available prior to submitting a BFFO and an application fee will be billed. BellSouth will also respond as to whether the application is Bona Fide and if it is not Bona Fide the items necessary to cause the application to become Bona Fide.

6.5 Denial of Application. If BellSouth notifies DPI that no space is available ("Denial of Application"), BellSouth will not assess an Application Fee. After notifying DPI that BellSouth has no available space in the requested Remote Site Location, BellSouth will allow DPI, upon request, to tour the Remote Site Location within ten (10) calendar days of such Denial of Application. In order to schedule said tour within ten (10) calendar days, the request for a tour of the Remote Site Location must be received by BellSouth within five (5) calendar days of the Denial of Application.

6.6 Filing of Petition for Waiver. Upon Denial of Application BellSouth will timely file a petition with the Commission pursuant to 47 U.S.C. § 251(c)(6). BellSouth shall provide to the Commission any information requested by that Commission. Such information shall include which space, if any, BellSouth or any of BellSouth's affiliates have reserved for future use and a detailed description of the specific future uses for which the space has been reserved. Subject to an appropriate nondisclosure agreement

or provision, BellSouth shall permit DPI to inspect any plans or diagrams that BellSouth provides to the Commission.

6.7 Waiting List. On a first-come, first-served basis governed by the date of receipt of an application or Letter of Intent, BellSouth will maintain a waiting list of requesting carriers who have either received a Denial of Application or, where it is publicly known that the Remote Site Location is out of space, have submitted a Letter of Intent to collocate. BellSouth will notify the telecommunications carriers on the waiting list that can be accommodated by the amount of space that becomes available according to the position of the telecommunications carriers on said waiting list.

6.7.1 In Florida, on a first-come, first-served basis governed by the date of receipt of an application or Letter of Intent, BellSouth will maintain a waiting list of requesting carriers who have either received a Denial of Application or, where it is publicly known that the Remote Site Location is out of space, have submitted a Letter of Intent to collocate. Sixty (60) calendar days prior to space becoming available, if known, BellSouth will notify the Florida PSC and the telecommunications carriers on the waiting list by mail when space becomes available according to the position of the telecommunications carrier on said waiting list. If not known sixty (60) calendar days in advance, BellSouth shall notify the Florida PSC and the telecommunications carriers on the waiting list within two business days of the determination that space is available. A telecommunications carrier that, upon denial of physical collocation, requests virtual collocation shall be automatically placed on the waiting list.

6.7.2 When space becomes available, DPI must submit an updated, complete, and correct application to BellSouth within thirty (30) calendar days of such notification. If DPI has originally requested caged Remote Collocation Space and cageless Remote Collocation Space becomes available, DPI may refuse such space and notify BellSouth in writing within that time that DPI wants to maintain its place on the waiting list without accepting such space. DPI may accept an amount of space less than its original request by submitting an application as set forth above, and upon request, may maintain its position on the waiting list for the remaining space that was initially requested. If DPI does not submit such an application or notify BellSouth in writing as described above, BellSouth will offer such space to the next telecommunications carrier on the waiting list and remove DPI from the waiting list. Upon request, BellSouth will advise DPI as to its position on the list.

6.8 Public Notification. BellSouth will maintain on its Interconnection Services website a notification document that will indicate all Remote Site Locations that are without available space. BellSouth shall update such document within ten (10) calendar days of the date that BellSouth becomes aware that there is insufficient space to accommodate collocation at the Remote Site Location. BellSouth will also post a document on its Interconnection Services website that contains a general notice where space has become available in a Remote Site Location previously on the space exhaust list.

6.9 Application Response.

6.9.1 In Florida, within fifteen (15) calendar days of receipt of a Bona Fide application, when space has been determined to be available or when a lesser amount of space than that requested is available, then with respect to the space available, BellSouth will provide an Application Response including sufficient information to enable DPI to place a Firm Order. The Application Response will include, at a minimum, the configuration of the space, the Cable Installation Fee, Cable Records Fee, and the space preparation fees, as described in Section 8. When DPI submits ten (10) or more applications within ten (10) calendar days, the initial fifteen (15) calendar day response period will increase by ten (10) calendar days for every additional ten (10) applications or fraction thereof.

6.9.2 In Alabama, Georgia, Kentucky, Mississippi, North Carolina, South Carolina, and Tennessee when space has been determined to be available, BellSouth will provide an Application Response within twenty (20) calendar days of receipt of a Bona Fide application. The Application Response will include, at a minimum, the configuration of the space, the Cable Installation Fee, Cable Records Fee, and the space preparation fees, as described in Section 8.

6.9.3 In Louisiana, when space has been determined to be available, BellSouth will respond with an Application Response within thirty (30) calendar days for one (1) to ten (10) applications; thirty (35) calendar days for eleven (11) to twenty (20) applications; and for requests of more than twenty (20) applications, the Application Response interval will be increased by five (5) calendar days for every five (5) applications received within five (5) business days. The Application Response will include, at a minimum, the configuration of the space, the Cable Installation Fee, Cable Records Fee, and the space preparation fees, as described in Section 8.

6.10 Application Modifications.

6.10.1 If a modification or revision is made to any information in the Bona Fide application prior to a BFFO, with the exception of modifications to Customer Information, Contact Information or Billing Contact Information, either at the request of DPI or necessitated by technical considerations, said application shall be considered a new application and shall be handled as a new application with respect to response and provisioning intervals and BellSouth will charge DPI a full application fee as set forth in Exhibit B. BellSouth will bill the nonrecurring fee on the date that BellSouth provides an Application Response.

6.10.2 Bona Fide Firm Order.

6.10.3 DPI shall indicate its intent to proceed with equipment installation in a BellSouth Remote Site Location by submitting a Firm Order to BellSouth. The BFFO must be received by BellSouth no later than thirty (30) calendar days after BellSouth's Application Response to DPI's Bona Fide application or the application will expire.

6.10.4 BellSouth will establish a firm order date based upon the date BellSouth is in receipt of a BFFO. BellSouth will acknowledge the receipt of DPI's BFFO within seven (7) calendar days of receipt indicating that the BFFO has been received. A BellSouth response to a BFFO will include a Firm Order Confirmation containing the firm order date. No revisions will be made to a BFFO.

7. Construction and Provisioning

7.1 Construction and Provisioning Intervals.

7.1.1 In Florida, BellSouth will complete construction for collocation arrangements as soon as possible and within a maximum of ninety (90) calendar days from receipt of a BFFO or as agreed to by the Parties. For changes to Remote Collocation Space after initial space completion ("Augmentation"), BellSouth will complete construction for collocation arrangements as soon as possible and within a maximum of forty-five (45) calendar days from receipt of a BFFO or as agreed to by the Parties. If BellSouth does not believe that construction will be completed within the relevant time frame and BellSouth and DPI cannot agree upon a completion date, within forty-five (45) calendar days of receipt of the BFFO for an initial request, and within thirty (30) calendar days for Augmentations, BellSouth may seek an extension from the Florida Commission.

7.1.2 In Alabama, Georgia, Kentucky, Mississippi, North Carolina, South Carolina, and Tennessee, BellSouth will complete construction for collocation arrangements under ordinary conditions as soon as possible and within a maximum of sixty (60) calendar days from receipt of a BFFO and ninety (90) calendar days from receipt of a BFFO for extraordinary conditions or as agreed to by the Parties. Ordinary conditions are defined as space available with only minor changes to support systems required, such as but not limited to, HVAC, cabling and the power plant(s). Extraordinary conditions shall include, but not limited to, major BellSouth equipment rearrangement or addition; power plant addition or upgrade; major mechanical addition or upgrade; major upgrade for ADA compliance; environmental hazard or hazardous materials abatement; and arrangements for which equipment shipping intervals are extraordinary in length. The Parties may mutually agree to renegotiate an alternative provisioning interval or BellSouth may seek a waiver from this interval from the Commission.

7.1.3 In Louisiana, BellSouth will complete construction for collocation arrangements under ordinary conditions as soon as possible and within a maximum of sixty (60) calendar days from receipt of a BFFO for an initial request, and within 60 calendar days for an Augmentation, or as agreed to by the Parties. The Parties may mutually agree to renegotiate an alternative provisioning interval or BellSouth may seek a waiver from this interval from the Commission.

7.2 In the event BellSouth does not have space immediately available at a Remote Site Location, BellSouth may elect to make additional space available by, for example but not limited to, rearranging BellSouth facilities or constructing additional capacity. In

such cases, the above intervals shall not apply and BellSouth will provision the Remote Collocation Space in a nondiscriminatory manner and at parity with BellSouth and will provide DPI with the estimated completion date in its Response.

7.3 Joint Planning. Joint planning between BellSouth and DPI will commence within a maximum of twenty (20) calendar days from BellSouth's receipt of a BFFO. BellSouth will provide the preliminary design of the Remote Collocation Space and the equipment configuration requirements as reflected in the Bona Fide application and affirmed in the BFFO. The Remote Collocation Space completion time period will be provided to DPI during joint planning.

7.4 Permits. Each Party or its agents will diligently pursue filing for the permits required for the scope of work to be performed by that Party or its agents within ten (10) calendar days of the completion of finalized construction designs and specifications.

7.5 Acceptance Walkthrough. DPI will schedule and complete an acceptance walkthrough of each Remote Collocation Space with BellSouth within fifteen (15) calendar days of BellSouth's notifying DPI that the Remote Collocation Space is ready for occupancy. In the event that DPI fails to complete an acceptance walkthrough within this fifteen (15) calendar day interval, the Remote Collocation Space shall be deemed accepted by DPI on the Space Ready Date. BellSouth will correct any deviations to DPI's original or jointly amended requirements within seven (7) calendar days after the walkthrough, unless the Parties jointly agree upon a different time frame.

7.6 Use of BellSouth Certified Supplier. DPI shall select a supplier which has been approved by BellSouth to perform all engineering and installation work DPI and DPI's BellSouth Certified Supplier must follow and comply with all BellSouth requirements outlined in BellSouth's TR 73503, TR 73519, TR 73572, and TR 73564. In some cases, DPI must select separate BellSouth Certified Suppliers for transmission equipment, switching equipment and power equipment. BellSouth shall provide DPI with a list of BellSouth Certified Suppliers upon request. The BellSouth Certified Supplier(s) shall be responsible for installing DPI's equipment and components, extending power cabling to the BellSouth power distribution frame, performing operational tests after installation is complete, and notifying BellSouth's Outside Plant engineers and DPI upon successful completion of installation. The BellSouth Certified Supplier shall bill DPI directly for all work performed for DPI pursuant to this Attachment, and BellSouth shall have no liability for nor responsibility to pay such charges imposed by the BellSouth Certified Supplier. BellSouth shall make available its supplier certification program to DPI or any supplier proposed by DPI and will not unreasonably withhold certification. All work performed by or for DPI shall conform to generally accepted industry standards.

7.7 Alarm and Monitoring. BellSouth may place alarms in the Remote Site Location for the protection of BellSouth equipment and facilities. DPI shall be responsible for placement, monitoring and removal of environmental and equipment alarms used to

service DPI's Remote Collocation Space. Upon request, BellSouth will provide DPI with applicable tariffed service(s) to facilitate remote monitoring of collocated equipment by DPI. Both Parties shall use best efforts to notify the other of any verified hazardous conditions known to that Party.

7.8 Virtual Remote Collocation Space Relocation. In the event physical Remote Collocation Space was previously denied at a Remote Site Location due to technical reasons or space limitations, and physical Remote Collocation Space has subsequently become available, DPI may relocate its virtual Remote Collocation arrangements to physical Remote Collocation Space arrangements and pay the appropriate fees for physical Remote Collocation Space and for the rearrangement or reconfiguration of services terminated in the virtual Remote Collocation Space arrangement, as outlined in the appropriate BellSouth tariffs. In the event that BellSouth knows when additional space for physical Remote Collocation Space may become available at the location requested by DPI, such information will be provided to DPI in BellSouth's written denial of physical Remote Collocation Space. To the extent that (i) physical Remote Collocation Space becomes available to DPI within one hundred eighty (180) calendar days of BellSouth's written denial of DPI's request for physical collocation, (ii) BellSouth had knowledge that the space was going to become available, and (iii) DPI was not informed in the written denial that physical Remote Collocation Space would become available within such one hundred eighty (180) calendar days, then DPI may relocate its virtual Remote Collocation Space arrangement to a physical Remote Collocation Space arrangement and will receive a credit for any nonrecurring charges previously paid for such virtual Remote Collocation Space. DPI must arrange with a BellSouth Certified Supplier for the relocation of equipment from its virtual Remote Collocation Space to its physical Remote Collocation Space and will bear the cost of such relocation.

7.8.1 In Alabama, BellSouth will complete a relocation from virtual collocation to physical collocation within ninety (90) calendar days.

7.9 Virtual to Physical Conversion (In-Place). Virtual collocation arrangements may be converted to "in-place" physical arrangements if the potential conversion meets the following four criteria: 1) there is no change in the amount of equipment or the configuration of the equipment that was in the virtual collocation arrangement; 2) the conversion of the virtual collocation arrangement will not cause the equipment or the results of that conversion to be located in a space that BellSouth has reserved for its own future needs; 3) the converted arrangement does not limit BellSouth's ability to secure its own equipment and facilities due to the location of the virtual collocation arrangement; and 4) any changes to the arrangement can be accommodated by existing power, HVAC, and other requirements. Unless otherwise specified, BellSouth will complete virtual to in-place physical collocation conversions within sixty (60) calendar days from receipt of the BFFO. BellSouth will bill DPI an Administrative Only Application Fee as set forth in Exhibit B for these charges on the date that BellSouth provides an Application Response.

7.9.1 In Alabama and Tennessee, BellSouth will complete Virtual to Physical Conversions (In Place) within thirty (30) calendar days from receipt of the BFFO.

7.10 Cancellation. If, at any time prior to space acceptance, DPI cancels its order for the Remote Collocation Space(s) ("Cancellation"), BellSouth will bill the applicable nonrecurring rate for any and all work processes for which work has begun. In Georgia, if DPI cancels its order for Remote Collocation Space at any time prior to space acceptance, BellSouth will bill DPI for all costs incurred prior to the date of Cancellation and for any costs incurred as a direct result of the Cancellation, not to exceed the total amount that would have been due had the order not been cancelled.

7.11 Licenses. DPI, at its own expense, will be solely responsible for obtaining from governmental authorities, and any other appropriate agency, entity, or person, all rights, privileges, and licenses necessary or required to operate as a provider of telecommunications services to the public or to build-out, equip and occupy the Remote Collocation Space.

7.12 Environmental Hazard Guidelines. The Parties agree to utilize and adhere to the Environmental Hazard Guidelines identified in Exhibit A attached hereto.

8. Rates and Charges

8.1 Recurring Charges. If DPI has met the applicable fifteen (15) calendar day walkthrough interval(s) specified in Section 4, billing for recurring charges will begin upon the Space Acceptance Date. In the event that DPI fails to complete an acceptance walkthrough within the applicable fifteen (15) calendar day interval(s), billing for recurring charges will commence on the Space Ready Date. If DPI occupies the space prior to the Space Ready Date, the date DPI occupies the space becomes the new Space Acceptance Date and billing for recurring charges begin on that date.

8.2 Application Fee. BellSouth shall assess an Application Fee via a service order, which shall be issued at the time BellSouth responds that space is available pursuant to Section 6.10 (Application Response). This nonrecurring fee will be billed by BellSouth on the date that BellSouth provides an Application Response.

8.2.1 In Tennessee, the applicable application fee is the planning fee for both Initial Applications and Subsequent Applications placed by DPI. This nonrecurring fee will be billed by BellSouth on the date that BellSouth provides an Application Response.

8.3 Rack/Bay Space. The rack/bay space charge includes reasonable charges for air conditioning, ventilation and other allocated expenses associated with maintenance of the Remote Site Location, and includes amperage necessary to power DPI's equipment. DPI shall pay rack/bay space charges based upon the number of racks/bays requested. BellSouth will assign Remote Collocation Space in conventional remote site rack/bay lineups where feasible.

8.4 Power. BellSouth shall make available –48 Volt (-48V) DC power for DPI's Remote Collocation Space at a BellSouth Power Board or BellSouth Battery Distribution Fuse Bay (BDFB) at DPI's option within the Remote Site Location. The charge for power shall be assessed as part of the recurring charge for rack/bay space. If the power requirements for DPI's equipment exceeds the capacity available, then such power requirements shall be assessed on an individual case basis. BellSouth will revise recurring power charges to reflect a power upgrade upon notification of the completion of the upgrade by DPI's BellSouth Certified Vendor. BellSouth will revise recurring power charges to reflect a power reduction upon BellSouth's receipt of the Power Reduction Form from DPI certifying the completion of the power reduction, including the removal of the power cabling by DPI's BellSouth Certified Supplier.

8.4.1 Adjacent Collocation Power. Charges for AC power will be assessed per breaker ampere per month. Rates include the provision of commercial and standby AC power, where available. When obtaining power from a BellSouth service panel, protection devices and power cables must be engineered (sized), and installed by DPI's BellSouth Certified Supplier except that BellSouth shall engineer and install protection devices and power cables for Adjacent Collocation. DPI's BellSouth Certified Supplier must also provide a copy of the engineering power specification prior to the equipment becoming operational. Charges for AC power shall be assessed pursuant to the rates specified in Exhibit B. AC power voltage and phase ratings shall be determined on a per location basis. At DPI's option, DPI may arrange for AC power in an Adjacent Collocation arrangement from a retail provider of electrical power.

8.5 Security Escort. A security escort will be required whenever DPI or its approved agent desires access to the Remote Site Location after the one accompanied site visit allowed pursuant to Section 5 prior to completing BellSouth's Security Training requirements. Rates for a security escort are assessed according to the schedule appended hereto as Exhibit B beginning with the scheduled escort time. BellSouth will wait for one-half (1/2) hour after the scheduled time for such an escort and DPI shall pay for such half-hour charges in the event DPI fails to show up.

8.6 Other. If no rate is identified in the contract, the rate for the specific service or function will be negotiated by the Parties upon request by either Party.

9. Insurance

9.1 DPI shall, at its sole cost and expense, procure, maintain, and keep in force insurance as specified in this Section and underwritten by insurance companies licensed to do business in the states applicable under this Agreement and having a Best's Insurance Rating of A-.

9.2 DPI shall maintain the following specific coverage:

9.2.1 Commercial General Liability coverage in the amount of ten million dollars ($10,000,000.00) or a combination of Commercial General Liability and Excess/Umbrella coverage totaling not less than ten million dollars ($10,000,000.00). BellSouth shall be named as an Additional Insured on the Commercial General Liability policy as specified herein.

9.2.2 Statutory Workers Compensation coverage and Employers Liability coverage in the amount of one hundred thousand dollars ($100,000.00) each accident, one hundred thousand dollars ($100,000.00) each employee by disease, and five hundred thousand dollars ($500,000.00) policy limit by disease.

9.2.3 All Risk Property coverage on a full replacement cost basis insuring all of DPI's real and personal property situated on or within BellSouth's Remote Site Location.

9.2.4 DPI may elect to purchase business interruption and contingent business interruption insurance, having been advised that BellSouth assumes no liability for loss of profit or revenues should an interruption of service occur.

9.3 The limits set forth in Section 9.2 above may be increased by BellSouth from time to time during the term of this Agreement upon thirty (30) calendar days notice to DPI to at least such minimum limits as shall then be customary with respect to comparable occupancy of BellSouth structures.

9.4 All policies purchased by DPI shall be deemed to be primary and not contributing to or in excess of any similar coverage purchased by BellSouth. All insurance must be in effect on or before the date equipment is delivered to BellSouth's Remote Site Location and shall remain in effect for the term of this Attachment or until all of DPI's property has been removed from BellSouth's Remote Site Location, whichever period is longer. If DPI fails to maintain required coverage, BellSouth may pay the premiums thereon and seek reimbursement of same from DPI.

9.5 DPI shall submit certificates of insurance reflecting the coverage required pursuant to this Section a minimum of ten (10) business days prior to the commencement of any work in the Remote Collocation Space. Failure to meet this interval may result in construction and equipment installation delays. DPI shall arrange for BellSouth to receive thirty (30) business days' advance notice of cancellation from DPI's insurance company. DPI shall forward a certificate of insurance and notice of cancellation/non-renewal to BellSouth at the following address:

BellSouth Telecommunications, Inc.
Attn.: Risk Management Coordinator
17H53 BellSouth Center
675 W. Peachtree Street
Atlanta, Georgia 30375

9.6 DPI must conform to recommendations made by BellSouth's fire insurance company to the extent BellSouth has agreed to, or shall hereafter agree to, such recommendations.

9.7 Self-Insurance. If DPI's net worth exceeds five hundred million dollars ($500,000,000), DPI may elect to request self-insurance status in lieu of obtaining any of the insurance required in Sections 9.2.1 and 9.2.2. DPI shall provide audited financial statements to BellSouth thirty (30) calendar days prior to the commencement of any work in the Remote Collocation Space. BellSouth shall then review such audited financial statements and respond in writing to DPI in the event that self-insurance status is not granted to DPI. If BellSouth approves DPI for self-insurance, DPI shall annually furnish to BellSouth, and keep current, evidence of such net worth that is attested to by one of DPI's corporate officers. The ability to self-insure shall continue so long as DPI meets all of the requirements of this Section. If DPI subsequently no longer satisfies this Section, DPI is required to purchase insurance as indicated by Sections 9.2.1 and Section 9.2.2.

9.8 The net worth requirements set forth in Section 9.7 may be increased by BellSouth from time to time during the term of this Attachment upon thirty (30) calendar days' notice to DPI to at least such minimum limits as shall then be customary with respect to comparable occupancy of BellSouth structures.

9.9 Failure to comply with the provisions of this Section will be deemed a material breach of this Attachment.

10. Mechanics Liens

10.1 If any mechanics lien or other liens shall be filed against property of either Party (BellSouth or DPI), or any improvement thereon by reason of or arising out of any labor or materials furnished or alleged to have been furnished or to be furnished to or for the other Party or by reason of any changes, or additions to said property made at the request or under the direction of the other Party, the other Party directing or requesting those changes shall, within thirty (30) business days after receipt of written notice from the Party against whose property said lien has been filed, either pay such lien or cause the same to be bonded off the affected property in the manner provided by law. The Party causing said lien to be placed against the property of the other shall also defend, at its sole cost and expense, on behalf of the other, any action, suit or proceeding which may be brought for the enforcement of such liens and shall pay any damage and discharge any judgment entered thereon.

11. Inspections

11.1 BellSouth may conduct an inspection of DPI's equipment and facilities in the Remote Collocation Space(s) prior to the activation of facilities between DPI's equipment and equipment of BellSouth. BellSouth may conduct an inspection if DPI adds equipment and may otherwise conduct routine inspections at reasonable intervals mutually agreed

upon by the Parties. BellSouth shall provide DPI with a minimum of forty-eight (48) hours or two (2) business days, whichever is greater, advance notice of all such inspections. All costs of such inspection shall be borne by BellSouth.

12. Security and Safety Requirements

12.1 Unless otherwise specified, DPI will be required, at its own expense, to conduct a statewide investigation of criminal history records for each DPI employee hired in the past five years being considered for work on the BellSouth Remote Site Location, for the states/counties where the DPI employee has worked and lived for the past five years. Where state law does not permit statewide collection or reporting, an investigation of the applicable counties is acceptable. DPI shall not be required to perform this investigation if an affiliated company of DPI has performed an investigation of the DPI employee seeking access, if such investigation meets the criteria set forth above. This requirement will not apply if DPI has performed a pre-employment statewide investigation of criminal history records of the DPI employee for the states/counties where the DPI employee has worked and lived for the past five years or, where state law does not permit a statewide investigation, an investigation of the applicable counties.

12.2 DPI will be required to administer to their personnel assigned to the BellSouth Premises security training either provided by BellSouth, or meeting criteria defined by BellSouth.

12.3 DPI shall provide its employees and agents with picture identification, which must be worn, and visible at all times while in the Remote Collocation Space or other areas in or around the Remote Site Location. The photo Identification card shall bear, at a minimum, the employee's name and photo, and DPI's name. BellSouth reserves the right to remove from its Remote Site Location any employee of DPI not possessing identification issued by DPI or who have violated any of BellSouth's policies as outlined in the CLEC Security Training documents. DPI shall hold BellSouth harmless for any damages resulting from such removal of its personnel from BellSouth Remote Site Location. DPI shall be solely responsible for ensuring that any Guest(s) of DPI is in compliance with all subsections of this Section.

12.4 DPI shall not assign to the BellSouth Remote Site Location any personnel with records of felony criminal convictions. DPI shall not assign to the BellSouth Remote Site Location any personnel with records of misdemeanor convictions, except for misdemeanor traffic violations, without advising BellSouth of the nature and gravity of the offense(s). BellSouth reserves the right to refuse access to any DPI personnel who have been identified to have misdemeanor criminal convictions. Notwithstanding the foregoing, in the event that DPI chooses not to advise BellSouth of the nature and gravity of any misdemeanor conviction, DPI may, in the alternative, certify to BellSouth that it shall not assign to the BellSouth Remote Site Location any personnel with records of misdemeanor convictions (other than misdemeanor traffic violations).

12.4.1 DPI shall not knowingly assign to the BellSouth Remote Site Location any individual who was a former employee of BellSouth and whose employment with BellSouth was terminated for a criminal offense whether or not BellSouth sought prosecution of the individual for the criminal offense.

12.4.2 DPI shall not knowingly assign to the BellSouth Remote Site Location any individual who was a former supplier of BellSouth and whose access to a BellSouth Remote Site Location was revoked due to commission of a criminal offense whether or not BellSouth sought prosecution of the individual for the criminal offense.

12.5 For each DPI employee or agent hired by DPI within five years of being considered for work on the BellSouth Remote Site Location, who requires access to a BellSouth Remote Site Location pursuant to this Attachment, DPI shall furnish BellSouth, prior to an employee gaining such access, a certification that the aforementioned background check and security training were completed. The certification will contain a statement that no felony convictions were found and certifying that the security training was completed by the employee. If the employee's criminal history includes misdemeanor convictions, DPI will disclose the nature of the convictions to BellSouth at that time. In the alternative, DPI may certify to BellSouth that it shall not assign to the BellSouth Remote Site Location any personnel with records of misdemeanor convictions other than misdemeanor traffic violations.

12.5.1 For all other DPI employees requiring access to a BellSouth Remote Site Location pursuant to this Attachment, DPI shall furnish BellSouth, prior to an employee gaining such access, a certification that the employee is not subject to the requirements of Section 12.5 above and that security training was completed by the employee.

12.6 At BellSouth's request, DPI shall promptly remove from BellSouth's Remote Site Location any employee of DPI BellSouth does not wish to grant access to its Remote Site Location 1) pursuant to any investigation conducted by BellSouth or 2) prior to the initiation of an investigation if an employee of DPI is found interfering with the property or personnel of BellSouth or another collocated telecommunications carrier, provided that an investigation shall promptly be commenced by BellSouth.

12.7 Security Violations. BellSouth reserves the right to interview DPI's employees, agents, or suppliers in the event of wrongdoing in or around BellSouth's property or involving BellSouth's or another collocated telecommunications carrier's property or personnel, provided that BellSouth shall provide reasonable notice to DPI's Security representative of such interview. DPI and its suppliers shall reasonably cooperate with BellSouth's investigation into allegations of wrongdoing or criminal conduct committed by, witnessed by, or involving DPI's employees, agents, or suppliers. Additionally, BellSouth reserves the right to bill DPI for all reasonable costs associated with investigations involving its employees, agents, or suppliers if it is established and mutually agreed in good faith that DPI's employees, agents, or suppliers are responsible for the alleged act. BellSouth shall bill DPI for BellSouth

property, which is stolen or damaged where an investigation determines the culpability of DPI's employees, agents, or suppliers and where DPI agrees, in good faith, with the results of such investigation. DPI shall notify BellSouth in writing immediately in the event that the DPI discovers one of its employees already working on the BellSouth Remote Site Location is a possible security risk. Upon request of the other Party, the Party who is the employer shall discipline consistent with its employment practices, up to and including removal from BellSouth's Remote Site Location, any employee found to have violated the security and safety requirements of this section. DPI shall hold BellSouth harmless for any damages resulting from such removal of its personnel from BellSouth's Remote Site Location.

12.8 Use of Supplies. Unauthorized use of telecommunications equipment or supplies by either Party, whether or not used routinely to provide telephone service (e.g. plug-in cards,) will be strictly prohibited and handled appropriately. Costs associated with such unauthorized use may be charged to the offending Party, as may be all associated investigative costs.

12.9 Use of Official Lines. Except for non-toll calls necessary in the performance of their work, neither Party shall use the telephones of the other Party on the BellSouth Remote Site Location. Charges for unauthorized telephone calls may be charged to the offending Party, as may be all associated investigative costs.

12.10 Accountability. Full compliance with the Security requirements of this Section shall in no way limit the accountability of either Party to the other for the improper actions of its employees.

13. Destruction of Remote Collocation Space

13.1 In the event a Remote Collocation Space is wholly or partially damaged by fire, windstorm, tornado, flood or by similar causes to such an extent as to be rendered wholly unsuitable for DPI's permitted use hereunder, then either Party may elect within ten (10) calendar days after such damage, to terminate this Attachment with respect to the affected Remote Collocation Space, and if either Party shall so elect, by giving the other written notice of termination, both Parties shall stand released of and from further liability under the terms hereof with respect to such Remote Collocation Space. If the Remote Collocation Space shall suffer only minor damage and shall not be rendered wholly unsuitable for DPI's permitted use, or is damaged and the option to terminate is not exercised by either Party, BellSouth covenants and agrees to proceed promptly without expense to DPI, except for improvements not to the property of BellSouth, to repair the damage. BellSouth shall have a reasonable time within which to rebuild or make any repairs, and such rebuilding and repairing shall be subject to delays caused by storms, shortages of labor and materials, government regulations, strikes, walkouts, and causes beyond the control of BellSouth, which causes shall not be construed as limiting factors, but as exemplary only. DPI may, at its own expense, accelerate the rebuild of its Remote Collocation Space and equipment provided however that a BellSouth Certified Supplier is used and the necessary space

preparation has been completed. Rebuild of equipment must be performed by a BellSouth Certified Vendor. If DPI' s acceleration of the project increases the cost of the project, then those additional charges will be incurred by DPI. Where allowed and where practical, DPI may erect a temporary facility while BellSouth rebuilds or makes repairs. In all cases where the Remote Collocation Space shall be rebuilt or repaired, DPI shall be entitled to an equitable abatement of rent and other charges, depending upon the unsuitability of the Remote Collocation Space for DPI's permitted use, until such Remote Collocation Space is fully repaired and restored and DPI's equipment installed therein (but in no event later than thirty (30) calendar days after the Remote Collocation Space is fully repaired and restored). Where DPI has placed a Remote Site Adjacent Arrangement pursuant to Section 3.4, DPI shall have the sole responsibility to repair or replace said Remote Site Adjacent Arrangement provided herein. Pursuant to this Section, BellSouth will restore the associated services to the Remote Site Adjacent Arrangement.

14. Eminent Domain

14.1 If the whole of a Remote Collocation Space or Remote Site Adjacent Arrangement shall be taken by any public authority under the power of eminent domain, then this Attachment shall terminate with respect to such Remote Collocation Space or Remote Site Adjacent Arrangement as of the day possession shall be taken by such public authority and rent and other charges for the Remote Collocation Space or Remote Site Adjacent Arrangement shall be paid up to that day with proportionate refund by BellSouth of such rent and charges as may have been paid in advance for a period subsequent to the date of the taking. If any part of the Remote Collocation Space or Remote Site Adjacent Arrangement shall be taken under eminent domain, BellSouth and DPI shall each have the right to terminate this Attachment with respect to such Remote Collocation Space or Remote Site Adjacent Arrangement and declare the same null and void, by written notice of such intention to the other Party within ten (10) calendar days after such taking.

15. Nonexclusivity

15.1 DPI understands that this Attachment is not exclusive and that BellSouth may enter into similar agreements with other Parties. Assignment of space pursuant to all such agreements shall be determined by space availability and made on a first come, first served basis.

ENVIRONMENTAL AND SAFETY PRINCIPLES

The following principles provide basic guidance on environmental and safety issues when applying for and establishing Physical Collocation arrangements.

1. GENERAL PRINCIPLES

1.1 Compliance with Applicable Law. BellSouth and DPI agree to comply with applicable federal, state, and local environmental and safety laws and regulations including U.S. Environmental Protection Agency (USEPA) regulations issued under the Clean Air Act (CAA), Clean Water Act (CWA), Resource Conservation and Recovery Act (RCRA), Comprehensive Environmental Response, Compensation and Liability Act (CERCLA), Superfund Amendments and Reauthorization Act (SARA), the Toxic Substances Control Act (TSCA), and OSHA regulations issued under the Occupational Safety and Health Act of 1970, as amended and NFPA and National Electrical Codes (NEC) and the NESC ("Applicable Laws"). Each Party shall notify the other if compliance inspections are conducted by regulatory agencies and/or citations are issued that relate to any aspect of this Attachment.

1.2 Notice. BellSouth and DPI shall provide notice to the other, including Material Safety Data Sheets (MSDSs), of known and recognized physical hazards or Hazardous Chemicals existing on site or brought on site. A Hazardous Chemical inventory list is posted on an OSHA Poster and updated annually at each Central Office. This Poster is normally located near the front entrance of the building or in the lounge area. Each Party is required to provide specific notice for known potential Imminent Danger conditions. DPI should contact 1-800-743-6737 for any BellSouth MSDS required.

1.3 Practices/Procedures. BellSouth may make available additional environmental control procedures for DPI to follow when working at a BellSouth Remote Site Location (See Section 2, below). These practices/procedures will represent the regular work practices required to be followed by the employees and suppliers of BellSouth for environmental protection. DPI will require its suppliers, agents and others accessing the BellSouth Remote Site Location to comply with these practices. Section 2 lists the Environmental categories where BST practices should be followed by DPI when operating in the BellSouth Remote Site Location.

1.4 Environmental and Safety Inspections. BellSouth reserves the right to inspect the DPI space with proper notification. BellSouth reserves the right to stop any DPI work operation that imposes Imminent Danger to the environment, employees or other persons in the area or Remote Site Location.

1.5 Hazardous Materials Brought On Site. Any hazardous materials brought into, used, stored or abandoned at the BellSouth Remote Site Location by DPI are owned by DPI. DPI will indemnify BellSouth for claims, lawsuits or damages to persons or property caused by these materials. Without prior written BellSouth approval, no substantial new safety or environmental hazards can be created by DPI or different hazardous materials used by DPI at the BellSouth Remote Site Location. DPI must demonstrate adequate emergency response capabilities for its materials used or remaining at the BellSouth Remote Site Location.

1.6 Spills and Releases. When contamination is discovered at a BellSouth Remote Site Location, either Party discovering the condition must notify the other Party. All Spills or Releases of regulated materials will immediately be reported by DPI to BellSouth.

1.7 Coordinated Environmental Plans and Permits. BellSouth and DPI will coordinate plans, permits or information required to be submitted to government agencies, such as emergency response plans, spill prevention control and countermeasures (SPCC) plans and community reporting. If fees are associated with filing, BellSouth and DPI will develop a cost sharing procedure. If BellSouth's permit or EPA identification number must be used, DPI must comply with all of BellSouth's permit conditions and environmental processes, including environmental "best management practices (BMP)" (see Section 2, below) and/or selection of BST disposition vendors and disposal sites.

1.8 Environmental and Safety Indemnification. BellSouth and DPI shall indemnify, defend and hold harmless the other Party from and against any claims (including, without limitation, third-party claims for personal injury or death or real or personal property damage), judgments, damages, (including direct and indirect damages, and punitive damages), penalties, fines, forfeitures, costs, liabilities, interest and losses arising in connection with the violation or alleged violation of any Applicable Law or contractual obligation or the presence or alleged presence of contamination arising out of the acts or omissions of the indemnifying Party, its agents, suppliers, or employees concerning its operations at the Remote Site Location.

2. CATEGORIES FOR CONSIDERATION OF ENVIRONMENTAL ISSUES

2.1 When performing functions that fall under the following Environmental categories on BellSouth's Remote Site Location, DPI agrees to comply with the applicable sections of the current issue of BellSouth's Environmental and Safety Methods and Procedures (M&Ps), incorporated herein by this reference. DPI further agrees to cooperate with BellSouth to ensure that DPI's employees, agents, and/or suppliers are knowledgeable of and satisfy those provisions of BellSouth's Environmental M&Ps which apply to the specific Environmental function being performed by DPI, its employees, agents and/or suppliers.

2.1.1 The most current version of reference documentation must be requested from DPI's BellSouth Account Team Collocation Coordinator (ATCC) Representative.

ENVIRONMENTAL CATEGORIES	ENVIRONMENTAL ISSUES	ADDRESSED BY THE FOLLOWING DOCUMENTATION
Disposal of hazardous material or other regulated material (e.g., batteries, fluorescent tubes, solvents & cleaning materials)	Compliance with all applicable local, state, & federal laws and regulations Pollution liability insurance EVET approval of supplier	• Std T&C 450 • Fact Sheet Series 17000 • Std T&C 660-3 • Approved Environmental Vendor List (Contact ATCC

		Representative)
Emergency response	Hazmat/waste release/spill fire safety emergency	• Fact Sheet Series 1700 • Building Emergency Operations Plan (EOP) (specific to and located on Remote Site Location)
Contract labor/outsourcing for services with environmental implications to be performed on BellSouth Remote Site Location (e.g., disposition of hazardous material/waste; maintenance of storage tanks)	Compliance with all applicable local, state, & federal laws and regulations Performance of services in accordance with BST's environmental M&Ps Insurance	• Std T&C 450 • Std T&C 450-B • (Contact ATCC Representative for copy of appropriate E/S M&Ps.) • Std T&C 660
Transportation of hazardous material	Compliance with all applicable local, state, & federal laws and regulations Pollution liability insurance EVET approval of supplier	• Std T&C 450 • Fact Sheet Series 17000 • Std T&C 660-3 • Approved Environmental Vendor List (Contact ATCC Representative)
Maintenance/operations work which may produce a waste Other maintenance work	Compliance with all applicable local, state, & federal laws and regulations Protection of BST employees and equipment	• Std T&C 450 • 29CFR 1910.147 (OSHA Standard) • 29CFR 1910 Subpart O (OSHA Standard)
Janitorial services	All waste removal and disposal must conform to all applicable federal, state and local regulations All Hazardous Material and Waste Asbestos notification and protection of employees and equipment	• –Procurement Manager (CRES Related Matters)-BST Supply Chain Services • Fact Sheet Series 17000 • GU-BTEN-001BT, Chapter 3 • BSP 010-170-001BS (Hazcom)

Manhole cleaning	Compliance with all applicable local, state, & federal laws and regulations Pollution liability insurance EVET approval of supplier	• Std T&C 450 • Fact Sheet 14050 • BSP 620-145-011PR Issue A, August 1996 • Std T&C 660-3 • Approved Environmental Vendor List (Contact ATCC Representative)
Removing or disturbing building materials that may contain asbestos	Asbestos work practices	• GU-BTEN-001BT, Chapter 3 For questions regarding removing or disturbing materials that contain asbestos, call the BellSouth Building Service Center: AL, MS, TN, KY & LA (local area code) 557-6194 FL, GA, NC & SC (local area code) 780-2740

3. DEFINITIONS

Generator. Under RCRA, the person whose act produces a Hazardous Waste, as defined in 40 CFR 261, or whose act first causes a Hazardous Waste to become subject to regulation. The Generator is legally responsible for the proper management and disposal of Hazardous Wastes in accordance with regulations.

Hazardous Chemical. As defined in the U.S. Occupational Safety and Health (OSHA) hazard communication standard (29 CFR 1910.1200), any chemical which is a health hazard or physical hazard.

Hazardous Waste. As defined in section 1004 of RCRA.

Imminent Danger. Any conditions or practices at a remote site location which are such that a danger exists which could reasonably be expected to cause immediate death or serious harm to people or immediate significant damage to the environment or natural resources.

Spill or Release. As defined in Section 101 of CERCLA.

4. ACRONYMS

ATCC – Account Team Collocation Coordinator

BST – BellSouth Telecommunications

CRES – Corporate Real Estate and Services (formerly PS&M)

DEC/LDEC - Department Environmental Coordinator/Local Department Environmental Coordinator

E/S – Environmental/Safety

EVET - Environmental Vendor Evaluation Team

GU-BTEN-001BT - BellSouth Environmental Methods and Procedures

NESC - National Electrical Safety Codes

P&SM - Property & Services Management

Std T&C - Standard Terms & Conditions

COLLOCATION - Alabama														Attachment: 4		Exhibit: B	
CATEGORY		RATE ELEMENTS	Interim	Zone	BCS	USOC	RATES ($)					Svc Order Submitted Elec per LSR	Svc Order Submitted Manually per LSR	Incremental Charge - Manual Svc Order vs. Electronic-1st	Incremental Charge - Manual Svc Order vs. Electronic-Add'l	Incremental Charge - Manual Svc Order vs. Electronic-Disc 1st	Incremental Charge - Manual Svc Order vs. Electronic-Disc Add'l
							Rec	Nonrecurring		Nonrecurring Disconnect		OSS Rates ($)					
								First	Add'l	First	Add'l	SOMEC	SOMAN	SOMAN	SOMAN	SOMAN	SOMAN
PHYSICAL COLLOCATION																	
		Physical Collocation 2-Wire Cross Connect, Exchange Port 2-Wire Analog - Res			UEPSR	PE1R2	0.03	12.30	11.80	6.03	5.44		15.66				
		Physical Collocation 2-Wire Cross Connect, Exchange Port 2-Wire Line Side PBX Trunk - Bus			UEPSP	PE1R2	0.03	12.30	11.80	6.03	5.44		15.66				
		Physical Collocation 2-Wire Cross Connect, Exchange Port 2-Wire Voice Grade PBX Trunk - Res			UEPSE	PE1R2	0.03	12.30	11.80	6.03	5.44		15.66				
		Physical Collocation 2-Wire Cross Connect, Exchange Port 2-Wire Analog - Bus			UEPSB	PE1R2	0.03	12.30	11.80	6.03	5.44		15.66				
		Physical Collocation 2-Wire Cross Connect, Exchange Port 2-Wire ISDN			UEPSX	PE1R2	0.03	12.30	11.80	6.03	5.44		15.66				
		Physical Collocation 2-Wire Cross Connect, Exchange Port 2-Wire ISDN			UEPTX	PE1R2	0.03	12.30	11.80	6.03	5.44		15.66				
		Physical Collocation 4-Wire Cross Connect, Exchange Port 4-Wire ISDN DS1			UEPEX	PE1R4	0.05	12.39	11.87	6.39	5.73		15.66				
PHYSICAL COLLOCATION																	
		Physical Collocation - Application Fee - Initial			CLO	PE1BA		1,879.48	1,879.48								
		Physical Collocation - Application Fee - Subsequent			CLO	PE1CA		1,566.60	1,566.60								
		Physical Collocation - Cageless - Application Fee			CLO	PE1CH		1,205.26	1,205.26								
		Physical Collocation Administrative Only - Application Fee			CLO	PE1BL		742.15									
		Physical Collocation - Space Preparation - Firm Order Processing			CLO	PE1SJ		600.71	600.71								
		Physical Collocation - Space Preparation - C.O. Modification per square ft.			CLO	PE1SK	1.96										
		Physical Collocation - Space Preparation - Common Systems Modification per square ft. - Cageless			CLO	PE1SL	2.62										
		Physical Collocation - Space Preparation - Common Systems Modification per Cage			CLO	PE1SM	88.86										
		Physical Collocation - Cable Installation			CLO	PE1BD		859.71	859.71	22.49	22.49						
		Physical Collocation - Floor Space per Sq. Ft.			CLO	PE1PJ	3.22										
		Physical Collocation - Cable Support Structure, Per Entrance Cable			CLO	PE1PM	17.11										
		Physical Collocation - Cageless - Cable Support Structure			CLO	PE1CJ	14.97										
		Physical Collocation - Power -48V DC Power, per Fused Amp			CLO	PE1PL	7.83										
		Physical Collocation - 120V, Single Phase Standby Power Rate			CLO	PE1FB	4.91										
		Physical Collocation - 240V, Single Phase Standby Power Rate			CLO	PE1FD	9.84										
		Physical Collocation - 120V, Three Phase Standby Power Rate			CLO	PE1FE	14.74										
		Physical Collocation - 277V, Three Phase Standby Power Rate			CLO	PE1FG	34.06										
		Physical Collocation - 2-Wire Cross-Connects			UEANL,UEA,UDN,UDC,UAL,UHL,UCL,UEQ, UDL, UNCVX, UNLDX, UNCNX	PE1P2	0.03	12.30	11.80	6.03	5.44						
		Physical Collocation - 4-Wire Cross-Connects			CLO, UAL, UDL, UDN, UEA, UHL, UNCVX, UNCDX, UCL	PE1P4	0.05	12.39	11.87	6.39	5.73						
		Physical Collocation - DS1 Cross-Connects			CLO,UEANL,UEQ,WDS1L,WDS1S, USL, U1TD1, UXTD1, UNC1X, ULDD1, USLEL, UNLD1, UDL	PE1P1	1.11	22.03	15.93	6.40	5.79						

COLLOCATION - Alabama

CATEGORY		RATE ELEMENTS	Interim	Zone	BCS	USOC	RATES ($)					Svc Order Submitted Elec per LSR	Svc Order Submitted Manually per LSR	Attachment: 4		Exhibit: B	
														Incremental Charge - Manual Svc Order vs. Electronic-1st	Incremental Charge - Manual Svc Order vs. Electronic-Add'l	Incremental Charge - Manual Svc Order vs. Electronic-Disc 1st	Incremental Charge - Manual Svc Order vs. Electronic-Disc Add'l
							Rec	Nonrecurring		Nonrecurring Disconnect		OSS Rates ($)					
								First	Add'l	First	Add'l	SOMEC	SOMAN	SOMAN	SOMAN	SOMAN	SOMAN
		Physical Collocation - DS3 Cross-Connects			CLO, UE3,U1TD3, UXTD3, UXTS1, UNC3X, UNCSX, ULDD3, U1TS1,ULDS1, UNLD3, UDL	PE1P3	14.16	20.89	15.20	7.38	5.92						
		Physical Collocation - 2-Fiber Cross-Connect			CLO, ULDO3, ULD12, ULD48, U1TO3, U1T12, U1T48, UDLO3, UDL12, UDF	PE1F2	2.81	20.89	15.20	7.38	5.92						
		Physical Collocation - Cageless - 2 Fiber Cross Connect			CLO, ULDO3, ULD12, ULD48, U1TO3, U1T12, U1T48, UDLO3, UDL12, UDF	PE1CK	2.84	20.89	15.20	7.38	5.92						
		Physical Collocation - 4-Fiber Cross-Connect			CLO, ULDO3, ULD12, ULD48, U1TO3, U1T12, U1T48, UDLO3, UDL12, UDF	PE1F4	4.99	25.55	19.86	9.71	8.25						
		Physical Collocation - Cageless - 4-Fiber Cross-Connect			CLO, ULDO3, ULD12, ULD48, U1TO3, U1T12, U1T48, UDLO3, UDL12, UDF	PE1CL	5.69	25.55	19.86	9.71	8.25						
		Physical Collocation - Welded Wire Cage - First 100 Sq. Ft.			CLO	PE1BW	156.33										
		Physical Collocation - Welded Wire Cage - Add'l 50 Sq. Ft.			CLO	PE1CW	15.34										
		Physical Collocation - Security Access System - Security System per Central Office			CLO	PE1AX	45.70										
		Physical Collocation - Security Access System - New Access Card Activation, per Card			CLO	PE1A1	0.05	27.79	27.79								
		Physical Collocation-Security Access System-Administrative Change, existing Access Card, per Request, per State, per Card			CLO	PE1AA		7.79	7.79								
		Physical Collocation - Security Access System - Replace Lost or Stolen Card, per Card			CLO	PE1AR		22.78	22.78								
		Physical Collocation - Security Access - Initial Key, per Key			CLO	PE1AK		13.10	13.10								
		Physical Collocation - Security Access - Key, Replace Lost or Stolen Key, per Key			CLO	PE1AL		13.10	13.10								
		Physical Collocation - Space Availability Report per premises			CLO	PE1SR		1,075.17	1,075.17								
		POT Bay Arrangements prior to 6/1/99 - 2-Wire Cross-Connect, per cross-connect			UEANL,UEA,UDN,UDC,UAL,UHL,UCL,UEQ,CLO,UDL, UNCVX, UNCDX, UNCNX	PE1PE	0.08										
		POT Bay Arrangements prior to 6/1/99 - 4-Wire Cross-Connect, per cross-connect			UEANL,UEA,UDN,UDC,UAL,UHL,UCL,UEQ,CLO, USL, UNCVX, UNCDX	PE1PF	0.17										
		POT Bay Arrangements prior to 6/1/99 - DS1 Cross-Connect, per cross-connect			UEANL,UEA,UDN,UDC,UAL,UHL,UCL,UEQ,CLO,WDS1L,WDS1S, USL, U1TD1, UXTD1, UNC1X, ULDD1, USLEL, UNLD1	PE1PG	1.20										

COLLOCATION - Alabama														Attachment: 4		Exhibit: B	
CATEGORY		RATE ELEMENTS	Interim	Zone	BCS	USOC	RATES ($)					Svc Order Submitted Elec per LSR	Svc Order Submitted Manually per LSR	Incremental Charge - Manual Svc Order vs. Electronic-1st	Incremental Charge - Manual Svc Order vs. Electronic-Add'l	Incremental Charge - Manual Svc Order vs. Electronic-Disc 1st	Incremental Charge - Manual Svc Order vs. Electronic-Disc Add'l
							Rec	Nonrecurring		Nonrecurring Disconnect		OSS Rates ($)					
								First	Add'l	First	Add'l	SOMEC	SOMAN	SOMAN	SOMAN	SOMAN	SOMAN
		POT Bay Arrangements prior to 6/1/99 - DS3 Cross-Connect, per cross-connect			UEANL,UEA,UDN,UDC,UAL,UHL,UCL,UEQ,CLO,UE3, U1TD3, UXTD3, UXTS1, UNC3X, UNCSX, ULDD3, U1TS1, ULDS1, UNLD3, UDL, UDLSX	PE1PH	10.67										
		POT Bay Arrangements prior to 6/1/99 - 2-Fiber Cross-Connect, per cross-connect			UEANL,UEA,UDN,UDC,UAL,UHL,UCL,UEQ,CLO, ULDO3, ULD12, ULD48, U1TO3, U1T12, U1T48, UDLO3, UDL12, UDF	PE1B2	36.40										
		POT Bay Arrangements prior to 6/1/99 - 4-Fiber Cross-Connect, per cross-connect			UEANL,UEA,UDN,UDC,UAL,UHL,UCL,UEQ,CLO, ULDO3, ULD12, ULD48, U1TO3, U1T12, U1T48, UDLO3, UDL12, UDF	PE1B4	49.09										
		Physical Collocation - Request Resend of CFA Information, per CLLI			CLO	PE1C9		77.56									
		Nonrecurring Collocation Cable Records - per request			CLO	PE1CR		759.29	488.11	133.00	133.00						
		Nonrecurring Collocation Cable Records - VG/DS0 Cable, per cable record			CLO	PE1CD		326.92	326.92	189.12	189.12						
		Nonrecurring Collocation Cable Records - VG/DS0 Cable, per each 100 pair			CLO	PE1CO		4.81	4.81	5.90	5.90						
		Nonrecurring Collocation Cable Records - DS1, per T1TIE			CLO	PE1C1		2.25	2.25	2.76	2.76						
		Nonrecurring Collocation Cable Records - DS3, per T3TIE			CLO	PE1C3		7.88	7.88	9.66	9.66						
		Nonrecurring Collocation Cable Records - Fiber Cable, per 99 fiber records			CLO	PE1CB		84.49	84.49	77.13	77.13						
		Physical Collocation - Security Escort - Basic, per Half Hour			CLO,CLORS	PE1BT		16.93	10.73								
		Physical Collocation - Security Escort - Overtime, per Half Hour			CLO,CLORS	PE1OT		22.05	13.86								
		Physical Collocation - Security Escort - Premium, per Half Hour			CLO,CLORS	PE1PT		27.17	16.98								
		V to P Conversion, Per Customer Request-Voice Grade			CLO	PE1BV		33.00									
		V to P Conversion, Per Customer Request-DS0			CLO	PE1BO		33.00									
		V to P Conversion, Per Customer Request-DS1			CLO	PE1B1		52.00									
		V to P Conversion, Per Customer request-DS3			CLO	PE1B3		52.00									
		V to P Conversion, Per Customer Request per VG Circuit Reconfigured			CLO	PE1BR		23.00									
		V to P Conversion, Per Customer Request per DS0 Circuit Reconfigured			CLO	PE1BP		23.00									
		V to P Conversion, Per Customer Request per DS1 Circuit Reconfigured			CLO	PE1BS		33.00									
		V to P Conversion, Per Customer Request per DS3 Circuit Reconfigured			CLO	PE1BE		37.00									
		V to P Conversion, Cable Pairs Assigned to Collo Space per 700 prs or fraction thereof			CLO	PE1B7		592.00									
		Physical Collocation - Co-Carrier Cross Connects - Fiber Cable Support Structure, per cable, per linear ft.			CLO,UDF	PE1ES	0.0011										
		Physical Collocation - Co-Carrier Cross Connects - Copper/Coax Cable Support Structure, per cable, per lin. ft.			CLO, UE3, USL	PE1DS	0.0016										
		Physical Collocation - Co-Carrier Cross Connects Only - Application Fee, per application			CLO	PE1DT		584.22									

COLLOCATION - Alabama														Attachment: 4		Exhibit: B	
CATEGORY		RATE ELEMENTS	Interim	Zone	BCS	USOC	RATES ($)					Svc Order Submitted Elec per LSR	Svc Order Submitted Manually per LSR	Incremental Charge - Manual Svc Order vs. Electronic-1st	Incremental Charge - Manual Svc Order vs. Electronic-Add'l	Incremental Charge - Manual Svc Order vs. Electronic-Disc 1st	Incremental Charge - Manual Svc Order vs. Electronic-Disc Add'l
							Rec	Nonrecurring		Nonrecurring Disconnect		OSS Rates ($)					
								First	Add'l	First	Add'l	SOMEC	SOMAN	SOMAN	SOMAN	SOMAN	SOMAN
		Physical Collocation - Application to Augment Exsisting Space - Simple			CLO	PE1KS		594.41		1.21							
		Physical Collocation - Application to Augment Exsisting Space - Minor			CLO	PE1KM		833.47		1.21							
		Physical Collocation - Application to Augment Exsisting Space - Intermediate			CLO	PE1K1		1,058.00		1.21							
ADJACENT COLLOCATION																	
		Adjacent Collocation - Space Charge per Sq. Ft.			CLOAC	PE1JA	0.14										
		Adjacent Collocation - Electrical Facility Charge per Linear Ft.			CLOAC	PE1JC	5.41										
		Adjacent Collocation - 2-Wire Cross-Connects			CLOAC	PE1P2	0.02	12.30	11.80	6.03	5.44						
		Adjacent Collocation - 4-Wire Cross-Connects			UEA,UHL,UDL,UCL, CLOAC	PE1P4	0.04	12.39	11.87	6.39	5.73						
		Adjacent Collocation - DS1 Cross-Connects			USL,CLOAC	PE1P1	1.03	22.03	15.93	6.40	5.79						
		Adjacent Collocation - DS3 Cross-Connects			CLOAC	PE1P3	13.95	20.89	15.20	7.38	5.92						
		Adjacent Collocation - 2-Fiber Cross-Connect			CLOAC	PE1F2	2.36	20.89	15.20	7.38	5.92						
		Adjacent Collocation - 4-Fiber Cross-Connect			CLOAC	PE1F4	4.52	25.55	19.86	9.71	8.25						
		Adjacent Collocation - Application Fee			CLOAC	PE1JB		1,576.69									
		Adjacent Collocation - 120V, Single Phase Standby Power Rate per AC Breaker Amp			CLOAC	PE1FB	4.91										
		Adjacent Collocation - 240V, Single Phase Standby Power Rate per AC Breaker Amp			CLOAC	PE1FD	9.84										
		Adjacent Collocation - 120V, Three Phase Standby Power Rate per AC Breaker Amp			CLOAC	PE1FE	14.74										
		Adjacent Collocation - 277V, Three Phase Standby Power Rate per AC Breaker Amp			CLOAC	PE1FG	34.06										
		Adjacent Collocation - DC power provisioning (Alabama Only Mandate)			CLOAC			ICB									
		Note: ICB means Individual Case Basis															
PHYSICAL COLLOCATION IN THE REMOTE SITE																	
		Physical Collocation in the Remote Site - Application Fee			CLORS	PE1RA		307.70	307.70	168.22	168.22						
		Cabinet Space in the Remote Site per Bay/ Rack			CLORS	PE1RB	201.42										
		Physical Collocation in the Remote Site - Security Access - Key			CLORS	PE1RD		13.10	13.10								
		Physical Collocation in the Remote Site - Space Availability Report per Premises Requested			CLORS	PE1SR		115.87	115.87								
		Physical Collocation in the Remote Site - Remote Site CLLI Code Request, per CLLI Code Requested			CLORS	PE1RE		37.56	37.56								
		Remote Site DLEC Data (BRSDD), per Compact Disk, per CO			CLORS	PE1RR		233.38									
		Power, DC Power Provisioning (Alabama Only)			CLORS		ICB										
PHYSICAL COLLOCATION IN THE REMOTE SITE - ADJACENT																	
		Remote Site-Adjacent Collocation - AC Power, per breaker amp	I		CLORS	PE1RS	6.27										
		Remote Site-Adjacent Collocation - Real Estate, per square foot	I		CLORS	PE1RT	0.134										
		Remote Site-Adjacent Collocation-Application Fee	I		CLORS	PE1RU		755.62	755.62								
	NOTE: If Security Escort and/or Add'l Engineering Fees become necessary for remote site collocation, the Parties will negotiate appropriate rates.																
VIRTUAL COLLOCATION																	
		Virtual Collocation - Application Fee			AMTFS	EAF		1,205.26	1,205.26	0.51	0.51		15.66				
		Virtual Collocation - Cable Installation Cost, per cable			AMTFS	ESPCX		859.71	859.71	22.49	22.49		15.66				
		Virtual Collocation - Floor Space, per sq. ft.			AMTFS	ESPVX	3.22										
		Virtual Collocation - Power, per fused amp			AMTFS	ESPAX	7.83										
		Virtual Collocation - Cable Support Structure, per entrance cable			AMTFS	ESPSX	14.97										
		Virtual Collocation - 2-wire Cross Connects (loop)			UEANL,UEA,UDN,UDC,UAL,UHL,UCL,UEQ, AMTFS, UDL, UNCVX, UNCDX, UNCNX	UEAC2	0.03	12.30	11.80	6.03	5.44		15.66				

COLLOCATION - Alabama														Attachment: 4		Exhibit: B	
CATEGORY		RATE ELEMENTS	Interim	Zone	BCS	USOC	RATES ($)					Svc Order Submitted Elec per LSR	Svc Order Submitted Manually per LSR	Incremental Charge - Manual Svc Order vs. Electronic-1st	Incremental Charge - Manual Svc Order vs. Electronic-Add'l	Incremental Charge - Manual Svc Order vs. Electronic-Disc 1st	Incremental Charge - Manual Svc Order vs. Electronic-Disc Add'l
							Rec	Nonrecurring		Nonrecurring Disconnect		OSS Rates ($)					
								First	Add'l	First	Add'l	SOMEC	SOMAN	SOMAN	SOMAN	SOMAN	SOMAN
		Virtual Collocation - 4-wire Cross Connects (loop)			UEA,UHL,UCL,UDL, AMTFS, UAL, UDN, UNCVX, UNCDX	UEAC4	0.05	12.39	11.87	6.39	5.73		15.66				
		Virtual Collocation - 2-Fiber Cross Connects			AMTFS,UDL12, UDLO3, U1T48, U1T12, U1T03, ULDO3, ULD12, ULD48, UDF	CNC2F	2.84	20.89	15.20	7.38	5.92		15.66				
		Virtual Collocation - 4-Fiber Cross Connects			AMTFS,UDL12, UDLO3, U1T48, U1T12, U1T03, ULDO3, ULD12, ULD48, UDF	CNC4F	5.69	25.55	19.86	9.71	8.25		15.66				
		Virtual collocation - Special Access & UNE, cross-connect per DS1			USL,ULC,AMTFS, ULR, UXTD1, UNC1X, ULDD1, U1TD1, USLEL, UNLD1	CNC1X	1.11	22.03	15.93	6.40	5.79		15.66				
		Virtual collocation - Special Access & UNE, cross-connect per DS3			USL,ULC,AMTFS,UE3, U1TD3, UXTS1, UXTD3, UNC3X, UNCSX, ULDD3, U1TS1, ULDS1, UDLSX, UNLD3	CND3X	14.16	20.89	15.20	7.38	5.92		15.66				
		Virtual Collocation - Co-Carrier Cross Connects - Fiber Cable Support Structure, per linear foot			AMTFS	VE1CB	0.0026										
		Virtual Collocation - Co-Carrier Cross Connects - Copper/Coax Cable Support Structure, per linear ft			AMTFS	VE1CD	0.0038										
		Virtual Collocation - Co-Carrier Cross Connects - Fiber Cable Support Structure,per cable			AMTFS	VE1CC		535.37					15.66				
		Virtual Collocation - Co-Carrier Cross Connects - Copper/Coax Cable Support Structure, per cable			AMTFS	VE1CE		535.37					15.66				
		Virtual Collocation Cable Records - per request			AMTFS	VE1BA		1,518.57	1,518.57	265.99	265.99		15.66				
		Virtual Collocation Cable Records - VG/DS0 Cable, per cable record			AMTFS	VE1BB		653.83	653.83	378.24	378.24		15.66				
		Virtual Collocaiton Cable Records - VG/DS0 Cable, per each 100 pair			AMTFS	VE1BC		9.62	9.62	11.79	11.79		15.66				
		Virtual Collocation Cable Records - DS1, per T1TIE			AMTFS	VE1BD		4.50	4.50	5.52	5.52		15.66				
		Virtual Collocation Cable Records - DS3, per T3TIE			AMTFS	VE1BE		15.75	15.75	19.32	19.32		15.66				
		Virtual Collocation Cable Records - Fiber Cable, per 99 fiber records			AMTFS	VE1BF		168.97	168.97	154.25	154.25		15.66				
		Virtual collocation - Security Escort - Basic, per half hour			AMTFS	SPTBX		16.93	10.73				15.66				
		Virtual collocation - Security Escort - Overtime, per half hour			AMTFS	SPTOX		22.05	13.86				15.66				
		Virtual collocation - Security Escort - Premium, per half hour			AMTFS	SPTPX		27.17	16.98				15.66				
		Virtual collocation - Maintenance in CO - Basic, per half hour			AMTFS	CTRLX		27.93	10.73				15.66				
		Virtual collocation - Maintenance in CO - Overtime, per half hour			AMTFS	SPTOM		36.47	13.86				15.66				
		Virtual collocation - Maintenance in CO - Premium per half hour			AMTFS	SPTPM		45.02	16.98				15.66				
VIRTUAL COLLOCATION																	
		Virtual Collocation - 2-wire Cross Connect, Exchange Port 2-Wire Analog - Res			UEPSR	VE1R2	0.03	12.30	11.80	6.03	5.44		15.66				
		Virtual Collocation 2-Wire Cross Connect, Exchange Port 2-Wire Line Side PBX Trunk - Bus			UEPSP	VE1R2	0.03	12.30	11.80	6.03	5.44		15.66				
		Virtual Collocation 2-Wire Cross Connect, Exchange Port 2-Wire Voice Grade PBX Trunk - Res			UEPSE	VE1R2	0.03	12.30	11.80	6.03	5.44		15.66				
		Virtual Collocation 2-Wire Cross Connect, Exchange Port 2-Wire Analog Bus			UEPSB	VE1R2	0.03	12.30	11.80	6.03	5.44		15.66				

COLLOCATION - Alabama														Attachment: 4		Exhibit: B	
CATEGORY		RATE ELEMENTS	Interim	Zone	BCS	USOC	RATES ($)					Svc Order Submitted Elec per LSR	Svc Order Submitted Manually per LSR	Incremental Charge - Manual Svc Order vs. Electronic-1st	Incremental Charge - Manual Svc Order vs. Electronic-Add'l	Incremental Charge - Manual Svc Order vs. Electronic-Disc 1st	Incremental Charge - Manual Svc Order vs. Electronic-Disc Add'l
							Rec	Nonrecurring		Nonrecurring Disconnect		OSS Rates ($)					
								First	Add'l	First	Add'l	SOMEC	SOMAN	SOMAN	SOMAN	SOMAN	SOMAN
		Virtual Collocation 2-Wire Cross Connect, Exchnage Port 2-Wire ISDN			UEPSX	VE1R2	0.03	12.30	11.80	6.03	5.44		15.66				
		Virtual Collocation 2-Wire Cross Connect, Exchange Port 2-Wire ISDN			UEPTX	VE1R2	0.03	12.30	11.80	6.03	5.44		15.66				
		Virtual Collocation 4-Wire Cross Connect, Exchange Port 4-Wire ISDN DS1			UEPEX	VE1R4	0.05	12.39	11.87	6.39	5.44		15.66				
	Note: Rates displaying an "R" in Interim column are interim and subject to rate true-up as set forth in General Terms and Conditions.																

COLLOCATION - Florida

CATEGORY	RATE ELEMENTS	Interim	Zone	BCS	USOC	RATES ($) Rec	Nonrecurring First	Nonrecurring Add'l	Nonrecurring Disconnect First	Nonrecurring Disconnect Add'l	Svc Order Submitted Elec per LSR	Svc Order Submitted Manually per LSR	Attachment: 4 Incremental Charge - Manual Svc Order vs. Electronic-1st	Attachment: 4 Incremental Charge - Manual Svc Order vs. Electronic-Add'l	Exhibit: B Incremental Charge - Manual Svc Order vs. Electronic-Disc 1st	Exhibit: B Incremental Charge - Manual Svc Order vs. Electronic-Disc Add'l
											OSS Rates ($)					
											SOMEC	SOMAN	SOMAN	SOMAN	SOMAN	SOMAN
PHYSICAL COLLOCATION																
	Physical Collocation 2-Wire Cross Connect, Exchange Port 2-Wire Analog - Res			UEPSR	PE1R2	0.0276	8.22	7.22				11.90				
	Physical Collocation 2-Wire Cross Connect, Exchange Port 2-Wire Line Side PBX Trunk - Bus			UEPSP	PE1R2	0.0276	8.22	7.22				11.90				
	Physical Collocation 2-Wire Cross Connect, Exchange Port 2-Wire Voice Grade PBX Trunk - Res			UEPSE	PE1R2	0.0276	8.22	7.22				11.90				
	Physical Collocation 2-Wire Cross Connect, Exchange Port 2-Wire Analog - Bus			UEPSB	PE1R2	0.0276	8.22	7.22				11.90				
	Physical Collocation 2-Wire Cross Connect, Exchange Port 2-Wire ISDN			UEPSX	PE1R2	0.0276	8.22	7.22				11.90				
	Physical Collocation 2-Wire Cross Connect, Exchange Port 2-Wire ISDN			UEPTX	PE1R2	0.0276	8.22	7.22				11.90				
	Physical Collocation 4-Wire Cross Connect, Exchange Port 4-Wire ISDN DS1			UEPEX	PE1R4	0.0552	8.42	7.36				11.90				
PHYSICAL COLLOCATION																
	Physical Collocation - Application Fee - Initial			CLO	PE1BA		2,597.00									
	Physical Collocation - Application Fee - Subsequent			CLO	PE1CA		2,236.00									
	Physical Collocation Administrative Only - Application Fee	I		CLO	PE1BL		742.00									
	Physical Collocation - Space Preparation - Firm Order Processing			CLO	PE1SJ		288.93									
	Physical Collocation - Space Preparation - C.O. Modification per square ft.			CLO	PE1SK	2.38										
	Physical Collocation - Space Preparation - Common Systems Modification per Cage			CLO	PE1SM	92.55										
	Physical Collocation - Cable Installation per Cable			CLO	PE1BD		1,750.00		45.16							
	Physical Collocation - Floor Space per Sq. Ft.			CLO	PE1PJ	7.86										
	Physical Collocation - Cable Support Structure, Per Entrance Cable			CLO	PE1PM	18.96										
	Physical Collocation - Power, per Fused Amp			CLO	PE1PL	7.80										
	Physical Collocation - Power Reduction, Application Fee	I		CLO	PE1PR		399.43									
	Physical Collocation - 120V, Single Phase Standby Power Rate			CLO	PE1FB	5.38										
	Physical Collocation - 240V, Single Phase Standby Power Rate			CLO	PE1FD	10.77										
	Physical Collocation - 120V, Three Phase Standby Power Rate			CLO	PE1FE	16.15										
	Physical Collocation - 277V, Three Phase Standby Power Rate			CLO	PE1FG	37.30										
	Physical Collocation - 2-Wire Cross-Connects			UEANL,UEA,UDN,UDC,UAL,UHL,UCL,UEQ, UDL, UNCVX, UNLDX, UNCNX	PE1P2	0.0276	8.22	7.22	5.74	4.58						
	Physical Collocation - 4-Wire Cross-Connects			CLO, UAL, UDL, UDN, UEA, UHL, UNCVX, UNCDX, UCL	PE1P4	0.0552	8.42	7.36	5.90	4.66						
	Physical Collocation - DS1 Cross-Connects			CLO,UEANL,UEQ,WDS1L,WDS1S, USL, U1TD1, UXTD1, UNC1X, ULDD1, USLEL, UNLD1, UDL	PE1P1	1.32	27.77	15.52	5.93	4.77						

COLLOCATION - Florida														Attachment: 4		Exhibit: B	
CATEGORY		RATE ELEMENTS	Interim	Zone	BCS	USOC	RATES ($)					Svc Order Submitted Elec per LSR	Svc Order Submitted Manually per LSR	Incremental Charge - Manual Svc Order vs. Electronic-1st	Incremental Charge - Manual Svc Order vs. Electronic-Add'l	Incremental Charge - Manual Svc Order vs. Electronic-Disc 1st	Incremental Charge - Manual Svc Order vs. Electronic-Disc Add'l
							Rec	Nonrecurring		Nonrecurring Disconnect		OSS Rates ($)					
								First	Add'l	First	Add'l	SOMEC	SOMAN	SOMAN	SOMAN	SOMAN	SOMAN
		Physical Collocation - DS3 Cross-Connects			CLO, UE3,U1TD3, UXTD3, UXTS1, UNC3X, UNCSX, ULDD3, U1TS1,ULDS1, UNLD3, UDL	PE1P3	16.81	25.48	14.05	7.77	5.01						
		Physical Collocation - 2-Fiber Cross-Connect			CLO, ULDO3, ULD12, ULD48, U1TO3, U1T12, U1T48, UDLO3, UDL12, UDF	PE1F2	3.34	41.94	30.52	13.91	11.16						
		Physical Collocation - 4-Fiber Cross-Connect			CLO, ULDO3, ULD12, ULD48, U1TO3, U1T12, U1T48, UDLO3, UDL12, UDF	PE1F4	5.92	51.30	39.87	18.29	15.54						
		Physical Collocation - Welded Wire Cage - First 100 Sq. Ft.			CLO	PE1BW	189.45										
		Physical Collocation - Welded Wire Cage - Add'l 50 Sq. Ft.			CLO	PE1CW	18.58										
		Physical Collocation - Security System Per Central Office Per Assignable Sq. Ft.			CLO	PE1AY	0.0105										
		Physical Collocation - Security Access System - New Access Card Activation, per Card			CLO	PE1A1	0.0577	55.80									
		Physical Collocation-Security Access System-Administrative Change, existing Access Card, per Request, per State, per Card			CLO	PE1AA		15.65									
		Physical Collocation - Security Access System - Replace Lost or Stolen Card, per Card			CLO	PE1AR		45.75									
		Physical Collocation - Security Access - Initial Key, per Key			CLO	PE1AK		26.30									
		Physical Collocation - Security Access - Key, Replace Lost or Stolen Key, per Key			CLO	PE1AL		26.30									
		Physical Collocation - Space Availability Report per premises			CLO	PE1SR		2,159.00									
		POT Bay Arrangements prior to 6/1/99 - 2-Wire Cross-Connect, per cross-connect	I		UEANL,UEA,UDN,UDC,UAL,UHL,UCL,UEQ,CLO,UDL, UNCVX, UNCDX, UNCNX	PE1PE	0.00										
		POT Bay Arrangements prior to 6/1/99 - 4-Wire Cross-Connect, per cross-connect	I		UEANL,UEA,UDN,UDC,UAL,UHL,UCL,UEQ,CLO, USL, UNCVX, UNCDX	PE1PF	0.00										
		POT Bay Arrangements prior to 6/1/99 - DS1 Cross-Connect, per cross-connect	I		UEANL,UEA,UDN,UDC,UAL,UHL,UCL,UEQ,CLO,WDS1L,WDS1S, USL, U1TD1, UXTD1, UNC1X, ULDD1, USLEL, UNLD1	PE1PG	0.00										
		POT Bay Arrangements prior to 6/1/99 - DS3 Cross-Connect, per cross-connect	I		UEANL,UEA,UDN,UDC,UAL,UHL,UCL,UEQ,CLO,UE3, U1TD3, UXTD3, UXTS1, UNC3X, UNCSX, ULDD3, U1TS1, ULDS1, UNLD3, UDL, UDLSX	PE1PH	0.00										

COLLOCATION - Florida														Attachment: 4		Exhibit: B	
CATEGORY		RATE ELEMENTS	Interim	Zone	BCS	USOC	RATES ($)					Svc Order Submitted Elec per LSR	Svc Order Submitted Manually per LSR	Incremental Charge - Manual Svc Order vs. Electronic-1st	Incremental Charge - Manual Svc Order vs. Electronic-Add'l	Incremental Charge - Manual Svc Order vs. Electronic-Disc 1st	Incremental Charge - Manual Svc Order vs. Electronic-Disc Add'l
							Rec	Nonrecurring		Nonrecurring Disconnect		OSS Rates ($)					
								First	Add'l	First	Add'l	SOMEC	SOMAN	SOMAN	SOMAN	SOMAN	SOMAN
		POT Bay Arrangements prior to 6/1/99 - 2-Fiber Cross-Connect, per cross-connect	I		UEANL,UEA,UDN,UDC,UAL,UHL,UCL,UEQ,CLO, ULDO3, ULD12, ULD48, U1TO3, U1T12, U1T48, UDLO3, UDL12, UDF	PE1B2	0.00										
		POT Bay Arrangements prior to 6/1/99 - 4-Fiber Cross-Connect, per cross-connect	I		UEANL,UEA,UDN,UDC,UAL,UHL,UCL,UEQ,CLO, ULDO3, ULD12, ULD48, U1TO3, U1T12, U1T48, UDLO3, UDL12, UDF	PE1B4	0.00										
		Physical Collocation - Request Resend of CFA Information, per CLLI	I		CLO	PE1C9		77.54									
		Nonrecurring Collocation Cable Records - per request			CLO	PE1CR		1,525.00	980.22	267.08							
		Nonrecurring Collocation Cable Records - VG/DS0 Cable, per cable record			CLO	PE1CD		656.50	656.50	379.78							
		Nonrecurring Collocation Cable Records - VG/DS0 Cable, per each 100 pair			CLO	PE1CO		9.66	9.66	11.84	11.84						
		Nonrecurring Collocation Cable Records - DS1, per T1TIE			CLO	PE1C1		4.52	4.52	5.54	5.54						
		Nonrecurring Collocation Cable Records - DS3, per T3TIE			CLO	PE1C3		15.82	15.82	19.40	19.40						
		Nonrecurring Collocation Cable Records - Fiber Cable, per 99 fiber records			CLO	PE1CB		169.67	169.67	154.89	154.89						
		Physical Collocation - Security Escort - Basic, Per Quarter Hour			CLO	PE1BQ		10.89									
		Physical Collocation - Security Escort - Overtime, Per Quarter Hour			CLO	PE1OQ		13.64									
		Physical Collocation - Security Escort - Premium, Per Quarter Hour			CLO	PE1PQ		16.40									
		Physical Collocation - Security Escort - Basic, per Half Hour			CLO,CLORS	PE1BT		33.99	21.54								
		Physical Collocation - Security Escort - Overtime, per Half Hour			CLO,CLORS	PE1OT		44.27	27.82								
		Physical Collocation - Security Escort - Premium, per Half Hour			CLO,CLORS	PE1PT		54.55	34.10								
		V to P Conversion, Per Customer Request-Voice Grade	I		CLO	PE1BV		33.00									
		V to P Conversion, Per Customer Request-DS0	I		CLO	PE1BO		33.00									
		V to P Conversion, Per Customer Request-DS1	I		CLO	PE1B1		52.00									
		V to P Conversion, Per Customer request-DS3	I		CLO	PE1B3		52.00									
		V to P Conversion, Per Customer Request per VG Circuit Reconfigured	I		CLO	PE1BR		23.00									
		V to P Conversion, Per Customer Request per DS0 Circuit Reconfigured	I		CLO	PE1BP		23.00									
		V to P Conversion, Per Customer Request per DS1 Circuit Reconfigured	I		CLO	PE1BS		33.00									
		V to P Conversion, Per Customer Request per DS3 Circuit Reconfigured	I		CLO	PE1BE		37.00									
		V to P Conversion, Cable Pairs Assigned to Collo Space per 700 prs or fraction thereof	I		CLO	PE1B7		592.00									
		Physical Collocation - Co-Carrier Cross Connects - Fiber Cable Support Structure, per cable, per linear ft.			CLO,UDF	PE1ES	0.001										
		Physical Collocation - Co-Carrier Cross Connects - Copper/Coax Cable Support Structure, per cable, per lin. ft.			CLO, UE3, USL	PE1DS	0.0014										
		Physical Collocation - Co-Carrier Cross Connects Only - Application Fee, per application			CLO	PE1DT		584.11									
ADJACENT COLLOCATION																	
		Adjacent Collocation - Space Charge per Sq. Ft.			CLOAC	PE1JA	0.1635										
		Adjacent Collocation - Electrical Facility Charge per Linear Ft.			CLOAC	PE1JC	5.11										

COLLOCATION - Florida														Attachment: 4		Exhibit: B	
CATEGORY		RATE ELEMENTS	Interim	Zone	BCS	USOC	RATES ($)					Svc Order Submitted Elec per LSR	Svc Order Submitted Manually per LSR	Incremental Charge - Manual Svc Order vs. Electronic-1st	Incremental Charge - Manual Svc Order vs. Electronic-Add'l	Incremental Charge - Manual Svc Order vs. Electronic-Disc 1st	Incremental Charge - Manual Svc Order vs. Electronic-Disc Add'l
							Rec	Nonrecurring		Nonrecurring Disconnect		OSS Rates ($)					
								First	Add'l	First	Add'l	SOMEC	SOMAN	SOMAN	SOMAN	SOMAN	SOMAN
		Adjacent Collocation - 2-Wire Cross-Connects			CLOAC	PE1P2	0.0213	24.69	23.69	11.77	10.62						
		Adjacent Collocation - 4-Wire Cross-Connects			UEA,UHL,UDL,UCL, CLOAC	PE1P4	0.0426	24.88	23.83	12.04	10.80						
		Adjacent Collocation - DS1 Cross-Connects			USL,CLOAC	PE1P1	1.22	44.24	31.98	12.07	10.91						
		Adjacent Collocation - DS3 Cross-Connects			CLOAC	PE1P3	16.56	41.94	30.52	13.91	11.15						
		Adjacent Collocation - 2-Fiber Cross-Connect			CLOAC	PE1F2	2.81	41.94	30.52	13.91	11.16						
		Adjacent Collocation - 4-Fiber Cross-Connect			CLOAC	PE1F4	5.36	51.30	39.87	18.29	15.54						
		Adjacent Collocation - Application Fee			CLOAC	PE1JB		2,785.00									
		Adjacent Collocation - 120V, Single Phase Standby Power Rate per AC Breaker Amp			CLOAC	PE1FB	5.38										
		Adjacent Collocation - 240V, Single Phase Standby Power Rate per AC Breaker Amp			CLOAC	PE1FD	10.77										
		Adjacent Collocation - 120V, Three Phase Standby Power Rate per AC Breaker Amp			CLOAC	PE1FE	16.15										
		Adjacent Collocation - 277V, Three Phase Standby Power Rate per AC Breaker Amp			CLOAC	PE1FG	37.30										
		Adjacent Collocation - Cable Support Structure per Entrance Cable	I		CLOAC	PE1PM	18.96										
PHYSICAL COLLOCATION IN THE REMOTE SITE																	
		Physical Collocation in the Remote Site - Application Fee			CLORS	PE1RA		617.91		328.81							
		Cabinet Space in the Remote Site per Bay/ Rack			CLORS	PE1RB	219.49										
		Physical Collocation in the Remote Site - Security Access - Key			CLORS	PE1RD		26.30									
		Physical Collocation in the Remote Site - Space Availability Report per Premises Requested			CLORS	PE1SR		232.69									
		Physical Collocation in the Remote Site - Remote Site CLLI Code Request, per CLLI Code Requested			CLORS	PE1RE		75.41									
		Remote Site DLEC Data (BRSDD), per Compact Disk, per CO			CLORS	PE1RR		233.51									
PHYSICAL COLLOCATION IN THE REMOTE SITE - ADJACENT																	
		Remote Site-Adjacent Collocation - AC Power, per breaker amp			CLORS	PE1RS	6.27										
		Remote Site-Adjacent Collocation - Real Estate, per square foot			CLORS	PE1RT	0.134										
		Remote Site-Adjacent Collocation-Application Fee			CLORS	PE1RU		755.62	755.62								
	NOTE: If Security Escort and/or Add'l Engineering Fees become necessary for remote site collocation, the Parties will negotiate appropriate rates.																
VIRTUAL COLLOCATION																	
		Virtual Collocation - Application Fee/Planning Fee Initial Request			AMTFS	EAF		4,122.00					11.90				
		Virtual Collocation - Application Fee/Planning Fee Additional Entrance Cable Request			AMTFS	EAF		1,249.00					11.90				
		Virtual Collocation - Cable Installation Cost, per cable			AMTFS	ESPCX	12.45	965.00					11.90				
		Virtual Collocation - Floor Space, per sq. ft.			AMTFS	ESPVX	4.25										
		Virtual Collocation - Power, per fused amp			AMTFS	ESPAX	6.95										
		Virtual Collocation - Cable Support Structure, per entrance cable			AMTFS	ESPSX	13.35										
		Virtual Collocation - 2-wire Cross Connects (loop)			UEANL,UEA,UDN,UDC,UAL,UHL,UCL,UEQ, AMTFS, UDL, UNCVX, UNCDX, UNCNX	UEAC2	0.0502	11.57	11.57				11.90				
		Virtual Collocation - 4-wire Cross Connects (loop)			UEA,UHL,UCL,UDL, AMTFS, UAL, UDN, UNCVX, UNCDX	UEAC4	0.0502	11.57	11.57				11.90				
		Virtual Collocation - 2-Fiber Cross Connects			AMTFS,UDL12, UDLO3, U1T48, U1T12, U1T03, ULDO3, ULD12, ULD48, UDF	CNC2F	6.71	2,431.00					11.90				

COLLOCATION - Florida														Attachment: 4		Exhibit: B	
CATEGORY		RATE ELEMENTS	Interim	Zone	BCS	USOC	RATES ($)					Svc Order Submitted Elec per LSR	Svc Order Submitted Manually per LSR	Incremental Charge - Manual Svc Order vs. Electronic-1st	Incremental Charge - Manual Svc Order vs. Electronic-Add'l	Incremental Charge - Manual Svc Order vs. Electronic-Disc 1st	Incremental Charge - Manual Svc Order vs. Electronic-Disc Add'l
							Rec	Nonrecurring		Nonrecurring Disconnect		OSS Rates ($)					
								First	Add'l	First	Add'l	SOMEC	SOMAN	SOMAN	SOMAN	SOMAN	SOMAN
		Virtual Collocation - 4-Fiber Cross Connects			AMTFS,UDL12, UDLO3, U1T48, U1T12, U1T03, ULDO3, ULD12, ULD48, UDF	CNC4F	6.71	2,431.00					11.90				
		Virtual collocation - Special Access & UNE, cross-connect per DS1			USL,ULC,AMTFS, ULR, UXTD1, UNC1X, ULDD1, U1TD1, USLEL, UNLD1	CNC1X	7.50	155.00	14.00				11.90				
		Virtual collocation - Special Access & UNE, cross-connect per DS3			USL,ULC,AMTFS,UE3, U1TD3, UXTS1, UXTD3, UNC3X, UNCSX, ULDD3, U1TS1, ULDS1, UDLSX, UNLD3	CND3X	56.25	151.90	11.83				11.90				
		Virtual Collocation - Co-Carrier Cross Connects - Fiber Cable Support Structure, per linear foot			AMTFS,CLO	VE1CB	0.0028										
		Virtual Collocation - Co-Carrier Cross Connects - Copper/Coax Cable Support Structure, per linear ft			AMTFS, CLO	VE1CD	0.0041										
		Virtual Collocation - Co-Carrier Cross Connects - Fiber Cable Support Structure,per cable			AMTFS	VE1CC		535.54					11.90				
		Virtual Collocation - Co-Carrier Cross Connects - Copper/Coax Cable Support Structure, per cable			AMTFS	VE1CE		535.54					11.90				
		Virtual Collocation Cable Records - per request			AMTFS	VE1BA		1,525.00	1,525.00	267.08	267.08						
		Virtual Collocation Cable Records - VG/DS0 Cable, per cable record			AMTFS	VE1BB		656.50	656.50	379.78	379.78						
		Virtual Collocation Cable Records - VG/DS0 Cable, per each 100 pair			AMTFS	VE1BC		9.66	9.66	11.84	11.84						
		Virtual Collocation Cable Records - DS1, per T1TIE			AMTFS	VE1BD		4.52	4.52	5.54	5.54						
		Virtual Collocation Cable Records - DS3, per T3TIE			AMTFS	VE1BE		15.82	15.82	19.40	19.40						
		Virtual Collocation Cable Records - Fiber Cable, per 99 fiber records			AMTFS	VE1BF		169.67	169.67	154.89	154.89						
		Virtual collocation - Security Escort - Basic, per quarter hour			AMTFS	SPTBQ		10.89					11.90				
		Virtual collocation - Security Escort - Overtime, per quarter hour			AMTFS	SPTOQ		13.64					11.90				
		Virtual collocation - Security Escort - Premium, per quarter hour			AMTFS	SPTPQ		16.40					11.90				
		Virtual Collocation - 2-wire Cross Connects (loop), per ckts			AMTFS	VE1R2	0.05	11.57					11.90				
		Virtual Collocation - 4-wire Cross Connects (loop), per ckts			AMTFS	VE1R4	0.05	11.57					11.90				
		Virtual Collocation - DS-1/DCS Cross Connects, PER CKTS			AMTFS	VE11S	8.09	69.64					11.90				
		Virtual Collocation - DS-1.DSX Cross Connects, PER CKTS			AMTFS	VE11X	0.41	69.64					11.90				
		Virtual Collocation - DS-3/DCS Cross Connects, PER CKT			AMTFS	VE13S	59.67	528.00					11.90				
		Virtual Collocation - DS-3/DSC Cross Connects, PER CKT			AMTFS	VE13X	10.06	528.00					11.90				
		Virtual collocation - Maintenance in CO - Basic, per quarter hour			AMTFS	SPTRE		10.89					11.90				
		Virtual collocation - Maintenance in CO - Overtime, per quarter hour			AMTFS	SPTOE		13.64					11.90				
		Virtual collocation - Maintenance in CO - Premium per quarter hour			AMTFS	SPTPE		16.40					11.90				
VIRTUAL COLLOCATION																	
		Virtual Collocation - 2-wire Cross Connect, Exchange Port 2-Wire Analog - Res			UEPSR	VE1R2	0.0502	11.57	11.57				11.90				
		Virtual Collocation 2-Wire Cross Connect, Exchange Port 2-Wire Line Side PBX Trunk - Bus			UEPSP	VE1R2	0.0502	11.57	11.57				11.90				
		Virtual Collocation 2-Wire Cross Connect, Exchange Port 2-Wire Voice Grade PBX Trunk - Res			UEPSE	VE1R2	0.0502	11.57	11.57				11.90				
		Virtual Collocation 2-Wire Cross Connect, Exchange Port 2-Wire Analog Bus			UEPSB	VE1R2	0.0502	11.57	11.57				11.90				

COLLOCATION - Florida														Attachment: 4		Exhibit: B	
CATEGORY		RATE ELEMENTS	Interim	Zone	BCS	USOC	RATES ($)					Svc Order Submitted Elec per LSR	Svc Order Submitted Manually per LSR	Incremental Charge - Manual Svc Order vs. Electronic-1st	Incremental Charge - Manual Svc Order vs. Electronic-Add'l	Incremental Charge - Manual Svc Order vs. Electronic-Disc 1st	Incremental Charge - Manual Svc Order vs. Electronic-Disc Add'l
							Rec	Nonrecurring		Nonrecurring Disconnect		OSS Rates ($)					
								First	Add'l	First	Add'l	SOMEC	SOMAN	SOMAN	SOMAN	SOMAN	SOMAN
		Virtual Collocation 2-Wire Cross Connect, Exchnage Port 2-Wire ISDN			UEPSX	VE1R2	0.0502	11.57	11.57				11.90				
		Virtual Collocation 2-Wire Cross Connect, Exchange Port 2-Wire ISDN			UEPTX	VE1R2	0.0502	11.57	11.57				11.90				
		Virtual Collocation 4-Wire Cross Connect, Exchange Port 4-Wire ISDN DS1			UEPEX	VE1R4	0.0502	11.57	11.57				11.90				
	Note: Rates displaying an "R" in Interim column are interim and subject to rate true-up as set forth in General Terms and Conditions.																

COLLOCATION - Georgia

CATEGORY	RATE ELEMENTS	Interim	Zone	BCS	USOC	RATES ($) Rec	Nonrecurring First	Nonrecurring Add'l	Nonrecurring Disconnect First	Nonrecurring Disconnect Add'l	Svc Order Submitted Elec per LSR SOMEC	Svc Order Submitted Manually per LSR SOMAN	Attachment: 4 Incremental Charge - Manual Svc Order vs. Electronic-1st SOMAN	Attachment: 4 Incremental Charge - Manual Svc Order vs. Electronic-Add'l SOMAN	Exhibit: B Incremental Charge - Manual Svc Order vs. Electronic-Disc 1st SOMAN	Exhibit: B Incremental Charge - Manual Svc Order vs. Electronic-Disc Add'l SOMAN
											OSS Rates ($)					
PHYSICAL COLLOCATION																
	Physical Collocation 2-Wire Cross Connect, Exchange Port 2-Wire Analog - Res			UEPSR	PE1R2	0.30	12.60	12.60					18.94	8.42		
	Physical Collocation 2-Wire Cross Connect, Exchange Port 2-Wire Line Side PBX Trunk - Bus			UEPSP	PE1R2	0.30	12.60	12.60					18.94	8.42		
	Physical Collocation 2-Wire Cross Connect, Exchange Port 2-Wire Voice Grade PBX Trunk - Res			UEPSE	PE1R2	0.30	12.60	12.60					18.94	8.42		
	Physical Collocation 2-Wire Cross Connect, Exchange Port 2-Wire Analog - Bus			UEPSB	PE1R2	0.30	12.60	12.60					18.94	8.42		
	Physical Collocation 2-Wire Cross Connect, Exchange Port 2-Wire ISDN			UEPSX	PE1R2	0.30	12.60	12.60					18.94	8.42		
	Physical Collocation 2-Wire Cross Connect, Exchange Port 2-Wire ISDN			UEPTX	PE1R2	0.30	12.60	12.60					18.94	8.42		
	Physical Collocation 4-Wire Cross Connect, Exchange Port 4-Wire ISDN DS1			UEPEX	PE1R4	0.50	12.60	12.60					18.94	8.42		
PHYSICAL COLLOCATION																
	Physical Collocation - Application Fee - Initial			CLO	PE1BA		3,850.00									
	Physical Collocation - Application Fee - Subsequent			CLO	PE1CA		3,130.00	3,130.00								
	Physical Collocation Administrative Only - Application Fee			CLO	PE1BL		740.83									
	Physical Collocation - Space Preparation - Firm Order Processing	I		CLO	PE1SJ		1,187.00									
	Physical Collocation - Space Preparation - C.O. Modification per square ft.	I		CLO	PE1SK	2.02										
	Physical Collocation - Space Preparation - Common Systems Modification per square ft. - Cageless	I		CLO	PE1SL	2.80										
	Physical Collocation - Space Preparation - Common Systems Modification per Cage	I		CLO	PE1SM	95.23										
	Physical Collocation - Cable Installation			CLO	PE1BD		2,750.00	2,750.00								
	Physical Collocation - Floor Space per Sq. Ft.			CLO	PE1PJ	7.50										
	Physical Collocation - Floor Space - Zone B per Sq. Ft.			CLO	PE1PK	6.75										
	Physical Collocation - Cable Support Structure, Per Entrance Cable			CLO	PE1PM	13.35										
	Physical Collocation - Power -48V DC Power, per Fused Amp	I		CLO	PE1PL	8.06										
	Physical Collocation - Power Reduction, Application Fee	I		CLO	PE1PR		398.80									
	Physical Collocation - 120V, Single Phase Standby Power Rate	I		CLO	PE1FB	5.52										
	Physical Collocation - 240V, Single Phase Standby Power Rate	I		CLO	PE1FD	11.05										
	Physical Collocation - 120V, Three Phase Standby Power Rate	I		CLO	PE1FE	16.58										
	Physical Collocation - 277V, Three Phase Standby Power Rate	I		CLO	PE1FG	38.27										
	Physical Collocation - 2-Wire Cross-Connects			UEANL,UEA,UDN,UDC,UAL,UHL,UCL,UEQ, UDL, UNCVX, UNLDX, UNCNX	PE1P2	0.30	12.60	12.60								
	Physical Collocation - 4-Wire Cross-Connects			CLO, UAL, UDL, UDN, UEA, UHL, UNCVX, UNCDX, UCL	PE1P4	0.50	12.60	12.60								
	Physical Collocation - DS1 Cross-Connects			CLO,UEANL,UEQ,WDS1L,WDS1S, USL, U1TD1, UXTD1, UNC1X, ULDD1, USLEL, UNLD1, UDL	PE1P1	8.00	155.00	27.00								

COLLOCATION - Georgia														Attachment: 4		Exhibit: B	
CATEGORY		RATE ELEMENTS	Interim	Zone	BCS	USOC	RATES ($)					Svc Order Submitted Elec per LSR	Svc Order Submitted Manually per LSR	Incremental Charge - Manual Svc Order vs. Electronic-1st	Incremental Charge - Manual Svc Order vs. Electronic-Add'l	Incremental Charge - Manual Svc Order vs. Electronic-Disc 1st	Incremental Charge - Manual Svc Order vs. Electronic-Disc Add'l
							Rec	Nonrecurring		Nonrecurring Disconnect		OSS Rates ($)					
								First	Add'l	First	Add'l	SOMEC	SOMAN	SOMAN	SOMAN	SOMAN	SOMAN
		Physical Collocation - DS3 Cross-Connects			CLO, UE3,U1TD3, UXTD3, UXTS1, UNC3X, UNCSX, ULDD3, U1TS1,ULDS1, UNLD3, UDL	PE1P3	72.00	155.00	27.00								
		Physical Collocation - 2-Fiber Cross-Connect			CLO, ULDO3, ULD12, ULD48, U1TO3, U1T12, U1T48, UDLO3, UDL12, UDF	PE1F2	2.86	52.14	38.72								
		Physical Collocation - 4-Fiber Cross-Connect			CLO, ULDO3, ULD12, ULD48, U1TO3, U1T12, U1T48, UDLO3, UDL12, UDF	PE1F4	5.08	64.74	51.31								
		Physical Collocation - Welded Wire Cage - First 100 Sq. Ft.	I		CLO	PE1BW	161.27										
		Physical Collocation - Welded Wire Cage - Add'l 50 Sq. Ft.	I		CLO	PE1CW	15.82										
		Physical Collocation - Security System Per Central Office Per Assignable Sq. Ft.			CLO	PE1AY	0.0172										
		Physical Collocation - Security Access System - New Access Card Activation, per Card			CLO	PE1A1	0.0607	46.20	46.20								
		Physical Collocation - Security Access System - New Access Card Deactivation, per Card			CLO	PE1A4		8.72	8.72								
		Physical Collocation-Security Access System-Administrative Change, existing Access Card, per Request, per State, per Card			CLO	PE1AA		15.40	15.40								
		Physical Collocation - Security Access System- Replace Lost or Stolen Card, per Card			CLO	PE1AR		45.02	45.02								
		Physical Collocation - Security Access - Initial Key, per Key			CLO	PE1AK		26.16	26.16								
		Physical Collocation - Security Access - Key, Replace Lost or Stolen Key, per Key			CLO	PE1AL		26.16	26.16								
		Physical Collocation - Space Availability Report per premises	I		CLO	PE1SR		2,148.00	2,148.00								
		POT Bay Arrangements prior to 6/1/99 - 2-Wire Cross-Connect, per cross-connect			UEANL,UEA,UDN,UDC,UAL,UHL,UCL,UEQ,CLO,UDL, UNCVX, UNCDX, UNCNX	PE1PE	0.40										
		POT Bay Arrangements prior to 6/1/99 - 4-Wire Cross-Connect, per cross-connect			UEANL,UEA,UDN,UDC,UAL,UHL,UCL,UEQ,CLO, USL, UNCVX, UNCDX	PE1PF	1.20										
		POT Bay Arrangements prior to 6/1/99 - DS1 Cross-Connect, per cross-connect			UEANL,UEA,UDN,UDC,UAL,UHL,UCL,UEQ,CLO,WDS1L,WDS1S, USL, U1TD1, UXTD1, UNC1X, ULDD1, USLEL, UNLD1	PE1PG	1.20										
		POT Bay Arrangements prior to 6/1/99 - DS3 Cross-Connect, per cross-connect			UEANL,UEA,UDN,UDC,UAL,UHL,UCL,UEQ,CLO,UE3, U1TD3, UXTD3, UXTS1, UNC3X, UNCSX, ULDD3, U1TS1, ULDS1, UNLD3, UDL, UDLSX	PE1PH	8.00										

COLLOCATION - Georgia														Attachment: 4		Exhibit: B	
CATEGORY		RATE ELEMENTS	Interim	Zone	BCS	USOC	RATES ($)					Svc Order Submitted Elec per LSR	Svc Order Submitted Manually per LSR	Incremental Charge - Manual Svc Order vs. Electronic-1st	Incremental Charge - Manual Svc Order vs. Electronic-Add'l	Incremental Charge - Manual Svc Order vs. Electronic-Disc 1st	Incremental Charge - Manual Svc Order vs. Electronic-Disc Add'l
							Rec	Nonrecurring		Nonrecurring Disconnect		OSS Rates ($)					
								First	Add'l	First	Add'l	SOMEC	SOMAN	SOMAN	SOMAN	SOMAN	SOMAN
		POT Bay Arrangements prior to 6/1/99 - 2-Fiber Cross-Connect, per cross-connect			UEANL,UEA,UDN,UDC,UAL,UHL,UCL,UEQ,CLO, ULDO3, ULD12, ULD48, U1TO3, U1T12, U1T48, UDLO3, UDL12, UDF	PE1B2	38.79										
		POT Bay Arrangements prior to 6/1/99 - 4-Fiber Cross-Connect, per cross-connect			UEANL,UEA,UDN,UDC,UAL,UHL,UCL,UEQ,CLO, ULDO3, ULD12, ULD48, U1TO3, U1T12, U1T48, UDLO3, UDL12, UDF	PE1B4	52.31										
		Physical Collocation - Request Resend of CFA Information, per CLLI			CLO	PE1C9		77.42									
		Nonrecurring Collocation Cable Records - per request			CLO	PE1CR		1,706.00									
		Nonrecurring Collocation Cable Records - VG/DS0 Cable, per cable record			CLO	PE1CD		922.38									
		Nonrecurring Collocation Cable Records - VG/DS0 Cable, per each 100 pair			CLO	PE1CO		18.00	18.00								
		Nonrecurring Collocation Cable Records - DS1, per T1TIE			CLO	PE1C1		8.43	8.43								
		Nonrecurring Collocation Cable Records - DS3, per T3TIE			CLO	PE1C3		29.49	29.49								
		Nonrecurring Collocation Cable Records - Fiber Cable, per 99 fiber records			CLO	PE1CB		278.61	278.61								
		Physical Collocation - Security Escort - Basic, per Half Hour			CLO,CLORS	PE1BT		41.00	25.00								
		Physical Collocation - Security Escort - Overtime, per Half Hour			CLO,CLORS	PE1OT		48.00	30.00								
		Physical Collocation - Security Escort - Premium, per Half Hour			CLO,CLORS	PE1PT		55.00	35.00								
		V to P Conversion, Per Customer Request-Voice Grade			CLO	PE1BV		33.00									
		V to P Conversion, Per Customer Request-DS0			CLO	PE1BO		33.00									
		V to P Conversion, Per Customer Request-DS1			CLO	PE1B1		52.00									
		V to P Conversion, Per Customer request-DS3			CLO	PE1B3		52.00									
		V to P Conversion, Per Customer Request per VG Circuit Reconfigured			CLO	PE1BR		23.00									
		V to P Conversion, Per Customer Request per DS0 Circuit Reconfigured			CLO	PE1BP		23.00									
		V to P Conversion, Per Customer Request per DS1 Circuit Reconfigured			CLO	PE1BS		33.00									
		V to P Conversion, Per Customer Request per DS3 Circuit Reconfigured			CLO	PE1BE		37.00									
		V to P Conversion, Cable Pairs Assigned to Collo Space per 700 prs or fraction thereof			CLO	PE1B7		592.00									
		Physical Collocation - Co-Carrier Cross Connects - Fiber Cable Support Structure, per cable, per linear ft.			CLO,UDF	PE1ES	0.001										
		Physical Collocation - Co-Carrier Cross Connects - Copper/Coax Cable Support Structure, per cable, per lin. ft.			CLO, UE3, USL	PE1DS	0.0015										
		Physical Collocation - Co-Carrier Cross Connects Only - Application Fee, per application			CLO	PE1DT		583.18									
		Physical Collocation - Application to Augment Exsisting Space - Simple			CLO	PE1KS		594.05		1.21							
		Physical Collocation - Application to Augment Exsisting Space - Minor			CLO	PE1KM		832.95		1.21							
		Physical Collocation - Application to Augment Exsisting Space - Intermediate			CLO	PE1K1		1,057.00		1.21							
ADJACENT COLLOCATION																	
		Adjacent Collocation - Space Charge per Sq. Ft.			CLOAC	PE1JA	0.2542										
		Adjacent Collocation - Electrical Facility Charge per Linear Ft.			CLOAC	PE1JC	5.44										

COLLOCATION - Georgia

CATEGORY	RATE ELEMENTS	Interim	Zone	BCS	USOC	RATES ($) Rec	Nonrecurring First	Nonrecurring Add'l	Nonrecurring Disconnect First	Nonrecurring Disconnect Add'l	Svc Order Submitted Elec per LSR SOMEC	Svc Order Submitted Manually per LSR SOMAN	Attachment: 4 Incremental Charge - Manual Svc Order vs. Electronic-1st SOMAN	Attachment: 4 Incremental Charge - Manual Svc Order vs. Electronic-Add'l SOMAN	Exhibit: B Incremental Charge - Manual Svc Order vs. Electronic-Disc 1st SOMAN	Exhibit: B Incremental Charge - Manual Svc Order vs. Electronic-Disc Add'l SOMAN
							OSS Rates ($)									
	Adjacent Collocation - 2-Wire Cross-Connects			CLOAC	PE1P2	0.598	24.95	23.97	11.80	10.67						
	Adjacent Collocation - 4-Wire Cross-Connects			UEA,UHL,UDL,UCL, CLOAC	PE1P4	0.1196	25.14	24.11	12.15	10.93						
	Adjacent Collocation - DS1 Cross-Connects			USL,CLOAC	PE1P1	1.04	44.19	32.13	11.93	10.81						
	Adjacent Collocation - DS3 Cross-Connects			CLOAC	PE1P3	14.12	41.93	30.69	13.71	11.04						
	Adjacent Collocation - 2-Fiber Cross-Connect			CLOAC	PE1F2	2.39	41.93	30.69	13.71	11.05						
	Adjacent Collocation - 4-Fiber Cross-Connect			CLOAC	PE1F4	4.57	51.14	39.90	17.96	15.29						
	Adjacent Collocation - Application Fee			CLOAC	PE1JB		1,555.00									
	Adjacent Collocation - 120V, Single Phase Standby Power Rate per AC Breaker Amp			CLOAC	PE1FB	5.39										
	Adjacent Collocation - 240V, Single Phase Standby Power Rate per AC Breaker Amp			CLOAC	PE1FD	10.79										
	Adjacent Collocation - 120V, Three Phase Standby Power Rate per AC Breaker Amp			CLOAC	PE1FE	16.18										
	Adjacent Collocation - 277V, Three Phase Standby Power Rate per AC Breaker Amp			CLOAC	PE1FG	38.27										
	Adjacent Collocation - 240V, Three Phase Standby Power Rate per AC Breaker Amp			CLOAC	PE1JD	37.37										
PHYSICAL COLLOCATION IN THE REMOTE SITE																
	Physical Collocation in the Remote Site - Application Fee			CLORS	PE1RA		608.18	608.17	323.63	323.63						
	Cabinet Space in the Remote Site per Bay/ Rack			CLORS	PE1RB	224.82										
	Physical Collocation in the Remote Site - Security Access - Key			CLORS	PE1RD		25.88	25.88								
	Physical Collocation in the Remote Site - Space Availability Report per Premises Requested			CLORS	PE1SR		229.02	229.02								
	Physical Collocation in the Remote Site - Remote Site CLLI Code Request, per CLLI Code Requested			CLORS	PE1RE		74.22	74.22								
	Remote Site DLEC Data (BRSDD), per Compact Disk, per CO			CLORS	PE1RR		232.88									
PHYSICAL COLLOCATION IN THE REMOTE SITE - ADJACENT																
	Remote Site-Adjacent Collocation - AC Power, per breaker amp			CLORS	PE1RS	6.27										
	Remote Site-Adjacent Collocation - Real Estate, per square foot			CLORS	PE1RT	0.134										
	Remote Site-Adjacent Collocation-Application Fee			CLORS	PE1RU		755.62	755.62								
	NOTE: If Security Escort and/or Add'l Engineering Fees become necessary for remote site collocation, the Parties will negotiate appropriate rates.															
VIRTUAL COLLOCATION																
	Virtual Collocation - Application Fee			AMTFS	EAF		2,848.30	2,848.30					19.99	19.99		
	Virtual Collocation - Cable Installation Cost, per cable			AMTFS	ESPCX		2,750.00	2,750.00					19.99	19.99		
	Virtual Collocation - Floor Space, per sq. ft.			AMTFS	ESPVX	3.20										
	Virtual Collocation - Power, per fused amp			AMTFS	ESPAX	3.48										
	Virtual Collocation - Cable Support Structure, per entrance cable			AMTFS	ESPSX	13.35										
	Virtual Collocation - 2-wire Cross Connects (loop)			UEANL,UEA,UDN,UDC,UAL,UHL,UCL,UEQ, AMTFS, UDL, UNCVX, UNCDX, UNCNX	UEAC2	0.0283	24.56	23.56	9.20	8.30			19.99	19.99	19.99	19.99
	Virtual Collocation - 4-wire Cross Connects (loop)			UEA,UHL,UCL,UDL, AMTFS, UAL, UDN, UNCVX, UNCDX	UEAC4	0.0566	24.75	23.70	9.03	8.10			19.99	19.99	19.99	19.99
	Virtual Collocation - 2-Fiber Cross Connects			AMTFS,UDL12, UDLO3, U1T48, U1T12, U1T03, ULDO3, ULD12, ULD48, UDF	CNC2F	2.88	41.72	30.36	10.43	8.36			2.20	2.20		

COLLOCATION - Georgia														Attachment: 4		Exhibit: B	
CATEGORY		RATE ELEMENTS	Interim	Zone	BCS	USOC	RATES ($)					Svc Order Submitted Elec per LSR	Svc Order Submitted Manually per LSR	Incremental Charge - Manual Svc Order vs. Electronic-1st	Incremental Charge - Manual Svc Order vs. Electronic-Add'l	Incremental Charge - Manual Svc Order vs. Electronic-Disc 1st	Incremental Charge - Manual Svc Order vs. Electronic-Disc Add'l
							Rec	Nonrecurring		Nonrecurring Disconnect		OSS Rates ($)					
								First	Add'l	First	Add'l	SOMEC	SOMAN	SOMAN	SOMAN	SOMAN	SOMAN
		Virtual Collocation - 4-Fiber Cross Connects			AMTFS,UDL12, UDLO3, U1T48, U1T12, U1T03, ULDO3, ULD12, ULD48, UDF	CNC4F	5.76	51.03	39.67	13.71	11.65			2.20	2.20		
		Virtual collocation - Special Access & UNE, cross-connect per DS1			USL,ULC,AMTFS, ULR, UXTD1, UNC1X, ULDD1, U1TD1, USLEL, UNLD1	CNC1X	7.50	155.00	14.00					19.99	19.99		
		Virtual collocation - Special Access & UNE, cross-connect per DS3			USL,ULC,AMTFS,UE3, U1TD3, UXTS1, UXTD3, UNC3X, UNCSX, ULDD3, U1TS1, ULDS1, UDLSX, UNLD3	CND3X	56.25	151.90	11.83					19.99	19.99		
		Virtual Collocation - Co-Carrier Cross Connects - Fiber Cable Support Structure, per linear foot			AMTFS	VE1CB	0.0023										
		Virtual Collocation - Co-Carrier Cross Connects - Copper/Coax Cable Support Structure, per linear ft			AMTFS	VE1CD	0.0034										
		Virtual Collocation - Co-Carrier Cross Connects - Fiber Cable Support Structure,per cable			AMTFS	VE1CC		553.43						19.99			
		Virtual Collocation - Co-Carrier Cross Connects - Copper/Coax Cable Support Structure, per cable			AMTFS	VE1CE		553.43						19.99			
		Virtual Collocation Cable Records - per request			AMTFS	VE1BA		1,706.00	1,706.00								
		Virtual Collocation Cable Records - VG/DS0 Cable, per cable record			AMTFS	VE1BB		922.38	922.38								
		Virtual Collocation Cable Records - VG/DS0 Cable, per each 100 pair			AMTFS	VE1BC		18.00	18.00								
		Virtual Collocation Cable Records - DS1, per T1TIE			AMTFS	VE1BD		8.43	8.43								
		Virtual Collocation Cable Records - DS3, per T3TIE			AMTFS	VE1BE		29.49	29.49								
		Virtual Collocation Cable Records - Fiber Cable, per 99 fiber records			AMTFS	VE1BF		278.61	278.61								
		Virtual collocation - Security Escort - Basic, per half hour			AMTFS	SPTBX		41.00	25.00					19.99	19.99		
		Virtual collocation - Security Escort - Overtime, per half hour			AMTFS	SPTOX		48.00	30.00					19.99	19.99		
		Virtual collocation - Security Escort - Premium, per half hour			AMTFS	SPTPX		55.00	35.00					19.99	19.99		
		Virtual collocation - Maintenance in CO - Basic, per half hour			AMTFS	CTRLX		30.64	30.64					19.99	19.99		
		Virtual collocation - Maintenance in CO - Overtime, per half hour			AMTFS	SPTOM		35.77	35.77					19.99	19.99		
		Virtual collocation - Maintenance in CO - Premium per half hour			AMTFS	SPTPM		40.90	40.90					19.99	19.99		
VIRTUAL COLLOCATION																	
		Virtual Collocation - 2-wire Cross Connect, Exchange Port 2-Wire Analog - Res			UEPSR	VE1R2	0.30	12.60	12.60					18.94	8.42		
		Virtual Collocation 2-Wire Cross Connect, Exchange Port 2-Wire Line Side PBX Trunk - Bus			UEPSP	VE1R2	0.30	12.60	12.60					18.94	8.42		
		Virtual Collocation 2-Wire Cross Connect, Exchange Port 2-Wire Voice Grade PBX Trunk - Res			UEPSE	VE1R2	0.30	12.60	12.60					18.94	8.42		
		Virtual Collocation 2-Wire Cross Connect, Exchange Port 2-Wire Analog Bus			UEPSB	VE1R2	0.30	12.60	12.60					18.94	8.42		
		Virtual Collocation 2-Wire Cross Connect, Exchnage Port 2-Wire ISDN			UEPSX	VE1R2	0.30	12.60	12.60					18.94	8.42		
		Virtual Collocation 2-Wire Cross Connect, Exchange Port 2-Wire ISDN			UEPTX	VE1R2	0.30	12.60	12.60					18.94	8.42		
		Virtual Collocation 4-Wire Cross Connect, Exchange Port 4-Wire ISDN DS1			UEPEX	VE1R4	0.50	12.60	12.60					18.94	8.42		
	Note: Rates displaying an "R" in Interim column are interim and subject to rate true-up as set forth in General Terms and Conditions.																

COLLOCATION - Kentucky														Attachment: 4		Exhibit: B	
CATEGORY		RATE ELEMENTS	Interim	Zone	BCS	USOC	RATES ($)					Svc Order Submitted Elec per LSR	Svc Order Submitted Manually per LSR	Incremental Charge - Manual Svc Order vs. Electronic-1st	Incremental Charge - Manual Svc Order vs. Electronic-Add'l	Incremental Charge - Manual Svc Order vs. Electronic-Disc 1st	Incremental Charge - Manual Svc Order vs. Electronic-Disc Add'l
							Rec	Nonrecurring		Nonrecurring Disconnect		OSS Rates ($)					
								First	Add'l	First	Add'l	SOMEC	SOMAN	SOMAN	SOMAN	SOMAN	SOMAN
PHYSICAL COLLOCATION																	
		Physical Collocation 2-Wire Cross Connect, Exchange Port 2-Wire Analog - Res			UEPSR	PE1R2	0.0333	24.68	23.68	12.14	10.95		7.86				
		Physical Collocation 2-Wire Cross Connect, Exchange Port 2-Wire Line Side PBX Trunk - Bus			UEPSP	PE1R2	0.0333	24.68	23.68	12.14	10.95		7.86				
		Physical Collocation 2-Wire Cross Connect, Exchange Port 2-Wire Voice Grade PBX Trunk - Res			UEPSE	PE1R2	0.0333	24.68	23.68	12.14	10.95		7.86				
		Physical Collocation 2-Wire Cross Connect, Exchange Port 2-Wire Analog - Bus			UEPSB	PE1R2	0.0333	24.68	23.68	12.14	10.95		7.86				
		Physical Collocation 2-Wire Cross Connect, Exchange Port 2-Wire ISDN			UEPSX	PE1R2	0.0333	24.68	23.68	12.14	10.95		7.86				
		Physical Collocation 2-Wire Cross Connect, Exchange Port 2-Wire ISDN			UEPTX	PE1R2	0.0333	24.68	23.68	12.14	10.95		7.86				
		Physical Collocation 4-Wire Cross Connect, Exchange Port 4-Wire ISDN DS1			UEPEX	PE1R4	1.48	44.23	31.98	12.81	11.57		7.86				
PHYSICAL COLLOCATION																	
		Physical Collocation - Application Fee - Initial			CLO	PE1BA		3,773.54	3,773.54								
		Physical Collocation - Application Fee - Subsequent			CLO	PE1CA		3,145.35	3,145.35								
		Physical Collocation Administrative Only - Application Fee			CLO	PE1BL		742.12									
		Physical Collocation - Space Preparation - Firm Order Processing			CLO	PE1SJ		1,206.07	1,206.07								
		Physical Collocation - Space Preparation - C.O. Modification per square ft.			CLO	PE1SK	2.32										
		Physical Collocation - Space Preparation - Common Systems Modification per square ft. - Cageless			CLO	PE1SL	3.26										
		Physical Collocation - Space Preparation - Common Systems Modification per Cage			CLO	PE1SM	110.57										
		Physical Collocation - Cable Installation			CLO	PE1BD		1,729.11		45.16							
		Physical Collocation - Floor Space per Sq. Ft.			CLO	PE1PJ	7.99										
		Physical Collocation - Cable Support Structure, Per Entrance Cable			CLO	PE1PM	19.86										
		Physical Collocation - Power -48V DC Power, per Fused Amp			CLO	PE1PL	8.06										
		Physical Collocation - Power Reduction, Application Fee	I		CLO	PE1PR		399.50									
		Physical Collocation - 120V, Single Phase Standby Power Rate			CLO	PE1FB	5.44										
		Physical Collocation - 240V, Single Phase Standby Power Rate			CLO	PE1FD	10.88										
		Physical Collocation - 120V, Three Phase Standby Power Rate			CLO	PE1FE	16.32										
		Physical Collocation - 277V, Three Phase Standby Power Rate			CLO	PE1FG	37.68										
		Physical Collocation - 2-Wire Cross-Connects			UEANL,UEA,UDN,UDC,UAL,UHL,UCL,UEQ, UDL, UNCVX, UNLDX, UNCNX	PE1P2	0.0333	24.68	23.68	12.14	10.95						
		Physical Collocation - 4-Wire Cross-Connects			CLO, UAL, UDL, UDN, UEA, UHL, UNCVX, UNCDX, UCL	PE1P4	0.0665	24.88	23.82	12.77	11.46						
		Physical Collocation - DS1 Cross-Connects			CLO,UEANL,UEQ,WDS1L,WDS1S, USL, U1TD1, UXTD1, UNC1X, ULDD1, USLEL, UNLD1, UDL	PE1P1	1.48	44.23	31.98	12.81	11.57						

COLLOCATION - Kentucky														Attachment: 4		Exhibit: B	
CATEGORY		RATE ELEMENTS	Interim	Zone	BCS	USOC	RATES ($)					Svc Order Submitted Elec per LSR	Svc Order Submitted Manually per LSR	Incremental Charge - Manual Svc Order vs. Electronic-1st	Incremental Charge - Manual Svc Order vs. Electronic-Add'l	Incremental Charge - Manual Svc Order vs. Electronic-Disc 1st	Incremental Charge - Manual Svc Order vs. Electronic-Disc Add'l
							Rec	Nonrecurring		Nonrecurring Disconnect		OSS Rates ($)					
								First	Add'l	First	Add'l	SOMEC	SOMAN	SOMAN	SOMAN	SOMAN	SOMAN
		Physical Collocation - DS3 Cross-Connects			CLO, UE3,U1TD3, UXTD3, UXTS1, UNC3X, UNCSX, ULDD3, U1TS1,ULDS1, UNLD3, UDL	PE1P3	18.89	41.93	30.51	14.75	11.83						
		Physical Collocation - 2-Fiber Cross-Connect			CLO, ULDO3, ULD12, ULD48, U1TO3, U1T12, U1T48, UDLO3, UDL12, UDF	PE1F2	3.75	41.93	30.51	14.76	11.84						
		Physical Collocation - 4-Fiber Cross-Connect			CLO, ULDO3, ULD12, ULD48, U1TO3, U1T12, U1T48, UDLO3, UDL12, UDF	PE1F4	6.65	51.29	39.87	19.41	16.49						
		Physical Collocation - Welded Wire Cage - First 100 Sq. Ft.			CLO	PE1BW	184.97										
		Physical Collocation - Welded Wire Cage - Add'l 50 Sq. Ft.			CLO	PE1CW	18.14										
		Physical Collocation - Security Access System - Security System per Central Office			CLO	PE1AX	76.10										
		Physical Collocation - Security Access System - New Access Card Activation, per Card			CLO	PE1A1	0.058	55.79	55.79								
		Physical Collocation-Security Access System-Administrative Change, existing Access Card, per Request, per State, per Card			CLO	PE1AA		15.64	15.64								
		Physical Collocation - Security Access System - Replace Lost or Stolen Card, per Card			CLO	PE1AR		45.74	45.74								
		Physical Collocation - Security Access - Initial Key, per Key			CLO	PE1AK		26.29	26.29								
		Physical Collocation - Security Access - Key, Replace Lost or Stolen Key, per Key			CLO	PE1AL		26.29	26.29								
		Physical Collocation - Space Availability Report per premises			CLO	PE1SR		2,158.67	2,158.67								
		POT Bay Arrangements prior to 6/1/99 - 2-Wire Cross-Connect, per cross-connect			UEANL,UEA,UDN,UDC,UAL,UHL,UCL,UEQ,CLO,UDL, UNCVX, UNCDX, UNCNX	PE1PE	0.113										
		POT Bay Arrangements prior to 6/1/99 - 4-Wire Cross-Connect, per cross-connect			UEANL,UEA,UDN,UDC,UAL,UHL,UCL,UEQ,CLO, USL, UNCVX, UNCDX	PE1PF	0.23										
		POT Bay Arrangements prior to 6/1/99 - DS1 Cross-Connect, per cross-connect			UEANL,UEA,UDN,UDC,UAL,UHL,UCL,UEQ,CLO,WDS1L,WDS1S, USL, U1TD1, UXTD1, UNC1X, ULDD1, USLEL, UNLD1	PE1PG	1.60										
		POT Bay Arrangements prior to 6/1/99 - DS3 Cross-Connect, per cross-connect			UEANL,UEA,UDN,UDC,UAL,UHL,UCL,UEQ,CLO,UE3, U1TD3, UXTD3, UXTS1, UNC3X, UNCSX, ULDD3, U1TS1, ULDS1, UNLD3, UDL, UDLSX	PE1PH	14.23										

COLLOCATION - Kentucky														Attachment: 4		Exhibit: B	
CATEGORY		RATE ELEMENTS	Interim	Zone	BCS	USOC	RATES ($)					Svc Order Submitted Elec per LSR	Svc Order Submitted Manually per LSR	Incremental Charge - Manual Svc Order vs. Electronic-1st	Incremental Charge - Manual Svc Order vs. Electronic-Add'l	Incremental Charge - Manual Svc Order vs. Electronic-Disc 1st	Incremental Charge - Manual Svc Order vs. Electronic-Disc Add'l
							Rec	Nonrecurring		Nonrecurring Disconnect		OSS Rates ($)					
								First	Add'l	First	Add'l	SOMEC	SOMAN	SOMAN	SOMAN	SOMAN	SOMAN
		POT Bay Arrangements prior to 6/1/99 - 2-Fiber Cross-Connect, per cross-connect			UEANL,UEA,UDN,UDC,UAL,UHL,UCL,UEQ,CLO, ULDO3, ULD12, ULD48, U1TO3, U1T12, U1T48, UDLO3, UDL12, UDF	PE1B2	48.57										
		POT Bay Arrangements prior to 6/1/99 - 4-Fiber Cross-Connect, per cross-connect			UEANL,UEA,UDN,UDC,UAL,UHL,UCL,UEQ,CLO, ULDO3, ULD12, ULD48, U1TO3, U1T12, U1T48, UDLO3, UDL12, UDF	PE1B4	65.50										
		Physical Collocation - Request Resend of CFA Information, per CLLI			CLO	PE1C9		77.55									
		Nonrecurring Collocation Cable Records - per request			CLO	PE1CR		1,524.45	980.01	267.02							
		Nonrecurring Collocation Cable Records - VG/DS0 Cable, per cable record			CLO	PE1CD		656.37	656.37	379.70							
		Nonrecurring Collocation Cable Records - VG/DS0 Cable, per each 100 pair			CLO	PE1CO		9.65	9.65	11.84	11.84						
		Nonrecurring Collocation Cable Records - DS1, per T1TIE			CLO	PE1C1		4.52	4.52	5.54	5.54						
		Nonrecurring Collocation Cable Records - DS3, per T3TIE			CLO	PE1C3		15.81	15.81	19.39	19.39						
		Nonrecurring Collocation Cable Records - Fiber Cable, per 99 fiber records			CLO	PE1CB		169.63	169.63	154.85	154.85						
		Physical Collocation - Security Escort - Basic, per Half Hour			CLO,CLORS	PE1BT		33.98	21.53								
		Physical Collocation - Security Escort - Overtime, per Half Hour			CLO,CLORS	PE1OT		44.26	27.81								
		Physical Collocation - Security Escort - Premium, per Half Hour			CLO,CLORS	PE1PT		54.54	34.09								
		V to P Conversion, Per Customer Request-Voice Grade			CLO	PE1BV		33.00									
		V to P Conversion, Per Customer Request-DS0			CLO	PE1BO		33.00									
		V to P Conversion, Per Customer Request-DS1			CLO	PE1B1		52.00									
		V to P Conversion, Per Customer request-DS3			CLO	PE1B3		52.00									
		V to P Conversion, Per Customer Request per VG Circuit Reconfigured			CLO	PE1BR		23.00									
		V to P Conversion, Per Customer Request per DS0 Circuit Reconfigured			CLO	PE1BP		23.00									
		V to P Conversion, Per Customer Request per DS1 Circuit Reconfigured			CLO	PE1BS		33.00									
		V to P Conversion, Per Customer Request per DS3 Circuit Reconfigured			CLO	PE1BE		37.00									
		V to P Conversion, Cable Pairs Assigned to Collo Space per 700 prs or fraction thereof			CLO	PE1B7		592.00									
		Physical Collocation - Co-Carrier Cross Connects - Fiber Cable Support Structure, per cable, per linear ft.			CLO,UDF	PE1ES	0.0012										
		Physical Collocation - Co-Carrier Cross Connects - Copper/Coax Cable Support Structure, per cable, per lin. ft.			CLO, UE3, USL	PE1DS	0.0018										
		Physical Collocation - Co-Carrier Cross Connects Only - Application Fee, per application			CLO	PE1DT		584.20									
		Physical Collocation - Application to Augment Exsisting Space - Simple			CLO	PE1KS		594.98		1.21							
		Physical Collocation - Application to Augment Exsisting Space - Minor			CLO	PE1KM		834.26		1.21							
		Physical Collocation - Application to Augment Exsisting Space - Intermediate			CLO	PE1K1		1,059.00		1.21							
ADJACENT COLLOCATION																	
		Adjacent Collocation - Space Charge per Sq. Ft.			CLOAC	PE1JA	0.0173										
		Adjacent Collocation - Electrical Facility Charge per Linear Ft.			CLOAC	PE1JC	5.35										

COLLOCATION - Kentucky														Attachment: 4		Exhibit: B	
CATEGORY		RATE ELEMENTS	Interim	Zone	BCS	USOC	RATES ($)					Svc Order Submitted Elec per LSR	Svc Order Submitted Manually per LSR	Incremental Charge - Manual Svc Order vs. Electronic-1st	Incremental Charge - Manual Svc Order vs. Electronic-Add'l	Incremental Charge - Manual Svc Order vs. Electronic-Disc 1st	Incremental Charge - Manual Svc Order vs. Electronic-Disc Add'l
							Rec	Nonrecurring		Nonrecurring Disconnect		OSS Rates ($)					
								First	Add'l	First	Add'l	SOMEC	SOMAN	SOMAN	SOMAN	SOMAN	SOMAN
		Adjacent Collocation - 2-Wire Cross-Connects			CLOAC	PE1P2	0.0258	24.68	23.68	12.14	10.95						
		Adjacent Collocation - 4-Wire Cross-Connects			UEA,UHL,UDL,UCL, CLOAC	PE1P4	0.0515	24.88	23.82	12.77	11.46						
		Adjacent Collocation - DS1 Cross-Connects			USL,CLOAC	PE1P1	1.37	44.23	31.98	12.81	11.57						
		Adjacent Collocation - DS3 Cross-Connects			CLOAC	PE1P3	18.61	41.93	30.51	14.75	11.83						
		Adjacent Collocation - 2-Fiber Cross-Connect			CLOAC	PE1F2	3.15	41.93	30.51	14.76	11.84						
		Adjacent Collocation - 4-Fiber Cross-Connect			CLOAC	PE1F4	6.02	51.29	39.87	19.41	16.49						
		Adjacent Collocation - Application Fee			CLOAC	PE1JB		3,165.50									
		Adjacent Collocation - 120V, Single Phase Standby Power Rate per AC Breaker Amp			CLOAC	PE1FB	5.44										
		Adjacent Collocation - 240V, Single Phase Standby Power Rate per AC Breaker Amp			CLOAC	PE1FD	10.88										
		Adjacent Collocation - 120V, Three Phase Standby Power Rate per AC Breaker Amp			CLOAC	PE1FE	16.32										
		Adjacent Collocation - 277V, Three Phase Standby Power Rate per AC Breaker Amp			CLOAC	PE1FG	37.68										
PHYSICAL COLLOCATION IN THE REMOTE SITE																	
		Physical Collocation in the Remote Site - Application Fee			CLORS	PE1RA		617.78		338.89							
		Cabinet Space in the Remote Site per Bay/ Rack			CLORS	PE1RB	219.67										
		Physical Collocation in the Remote Site - Security Access - Key			CLORS	PE1RD		26.29									
		Physical Collocation in the Remote Site - Space Availability Report per Premises Requested			CLORS	PE1SR		232.64									
		Physical Collocation in the Remote Site - Remote Site CLLI Code Request, per CLLI Code Requested			CLORS	PE1RE		75.40									
		Remote Site DLEC Data (BRSDD), per Compact Disk, per CO			CLORS	PE1RR		233.42									
PHYSICAL COLLOCATION IN THE REMOTE SITE - ADJACENT																	
		Remote Site-Adjacent Collocation - AC Power, per breaker amp			CLORS	PE1RS	6.27										
		Remote Site-Adjacent Collocation - Real Estate, per square foot			CLORS	PE1RT	0.134										
		Remote Site-Adjacent Collocation-Application Fee			CLORS	PE1RU		755.62	755.62								
	NOTE: If Security Escort and/or Add'l Engineering Fees become necessary for remote site collocation, the Parties will negotiate appropriate rates.																
VIRTUAL COLLOCATION																	
		Virtual Collocation - Application Fee			AMTFS	EAF		2,419.86	2,419.86	1.01	1.01		7.86				
		Virtual Collocation - Cable Installation Cost, per cable			AMTFS	ESPCX		1,729.11	1,729.11	45.16	45.16		7.86				
		Virtual Collocation - Floor Space, per sq. ft.			AMTFS	ESPVX	7.99										
		Virtual Collocation - Power, per fused amp			AMTFS	ESPAX	8.06										
		Virtual Collocation - Cable Support Structure, per entrance cable			AMTFS	ESPSX	17.38										
		Virtual Collocation - 2-wire Cross Connects (loop)			UEANL,UEA,UDN,UDC,UAL,UHL,UCL,UEQ, AMTFS, UDL, UNCVX, UNCDX, UNCNX	UEAC2	0.0309	24.68	23.68	12.14	10.95		7.86				
		Virtual Collocation - 4-wire Cross Connects (loop)			UEA,UHL,UCL,UDL, AMTFS, UAL, UDN, UNCVX, UNCDX	UEAC4	0.0619	24.88	23.82	12.77	11.46		7.86				
		Virtual Collocation - 2-Fiber Cross Connects			AMTFS,UDL12, UDLO3, U1T48, U1T12, U1T03, ULDO3, ULD12, ULD48, UDF	CNC2F	3.80	41.94	30.51	14.76	11.84		7.86				
		Virtual Collocation - 4-Fiber Cross Connects			AMTFS,UDL12, UDLO3, U1T48, U1T12, U1T03, ULDO3, ULD12, ULD48, UDF	CNC4F	7.59	51.29	39.87	19.41	16.49		7.86				

COLLOCATION - Kentucky

CATEGORY	RATE ELEMENTS	Interim	Zone	BCS	USOC	RATES ($) Rec	Nonrecurring First	Nonrecurring Add'l	Nonrecurring Disconnect First	Nonrecurring Disconnect Add'l	Svc Order Submitted Elec per LSR	Svc Order Submitted Manually per LSR	Attachment: 4 Incremental Charge - Manual Svc Order vs. Electronic-1st	Attachment: 4 Incremental Charge - Manual Svc Order vs. Electronic-Add'l	Exhibit: B Incremental Charge - Manual Svc Order vs. Electronic-Disc 1st	Exhibit: B Incremental Charge - Manual Svc Order vs. Electronic-Disc Add'l
											OSS Rates ($)					
							First	Add'l	First	Add'l	SOMEC	SOMAN	SOMAN	SOMAN	SOMAN	SOMAN
	Virtual collocation - Special Access & UNE, cross-connect per DS1			USL,ULC,AMTFS, ULR, UXTD1, UNC1X, ULDD1, U1TD1, USLEL, UNLD1	CNC1X	1.48	44.23	31.98	12.81	11.57						
	Virtual collocation - Special Access & UNE, cross-connect per DS3			USL,ULC,AMTFS,UE3, U1TD3, UXTS1, UXTD3, UNC3X, UNCSX, ULDD3, U1TS1, ULDS1, UDLSX, UNLD3	CND3X	18.89	41.93	30.51	14.75	11.83						
	Virtual Collocation - Co-Carrier Cross Connects - Fiber Cable Support Structure, per linear foot			AMTFS	VE1CB	0.003										
	Virtual Collocation - Co-Carrier Cross Connects - Copper/Coax Cable Support Structure, per linear ft			AMTFS	VE1CD	0.0045										
	Virtual Collocation - Co-Carrier Cross Connects - Fiber Cable Support Structure,per cable			AMTFS	VE1CC		535.55									
	Virtual Collocation - Co-Carrier Cross Connects - Copper/Coax Cable Support Structure, per cable			AMTFS	VE1CE		535.55									
	Virtual Collocation Cable Records - per request			AMTFS	VE1BA		1,524.45	980.01	267.02	267.02						
	Virtual Collocation Cable Records - VG/DS0 Cable, per cable record			AMTFS	VE1BB		656.37	656.37	379.70	379.70						
	Virtual Collocation Cable Records - VG/DS0 Cable, per each 100 pair			AMTFS	VE1BC		9.65	9.65	11.84	11.84						
	Virtual Collocation Cable Records -DS1, per T1TIE			AMTFS	VE1BD		4.52	4.52	5.54	5.54						
	Virtual Collocation Cable Records - DS3, per T3TIE			AMTFS	VE1BE		15.81	15.81	19.39	19.39						
	Virtual Collocation Cable Records - Fiber Cable, per 99 fiber records			AMTFS	VE1BF		169.63	169.63	154.85	154.85						
	Virtual collocation - Security Escort - Basic, per half hour			AMTFS	SPTBX		33.98	21.53								
	Virtual collocation - Security Escort - Overtime, per half hour			AMTFS	SPTOX		44.26	27.81								
	Virtual collocation - Security Escort - Premium, per half hour			AMTFS	SPTPX		54.54	34.09								
	Virtual collocation - Maintenance in CO - Basic, per half hour			AMTFS	CTRLX		56.07	21.53								
	Virtual collocation - Maintenance in CO - Overtime, per half hour			AMTFS	SPTOM		73.23	27.81								
	Virtual collocation - Maintenance in CO - Premium per half hour			AMTFS	SPTPM		90.39	34.09								
VIRTUAL COLLOCATION																
	Virtual Collocation - 2-wire Cross Connect, Exchange Port 2-Wire Analog - Res			UEPSR	VE1R2	0.0309	24.68	23.68	12.14	10.95		7.86				
	Virtual Collocation 2-Wire Cross Connect, Exchange Port 2-Wire Line Side PBX Trunk - Bus			UEPSP	VE1R2	0.0309	24.68	23.68	12.14	10.95		7.86				
	Virtual Collocation 2-Wire Cross Connect, Exchange Port 2-Wire Voice Grade PBX Trunk - Res			UEPSE	VE1R2	0.0309	24.68	23.68	12.14	10.95		7.86				
	Virtual Collocation 2-Wire Cross Connect, Exchange Port 2-Wire Analog Bus			UEPSB	VE1R2	0.0309	24.68	23.68	12.14	10.95		7.86				
	Virtual Collocation 2-Wire Cross Connect, Exchnage Port 2-Wire ISDN			UEPSX	VE1R2	0.0309	24.68	23.68	12.14	10.95		7.86				
	Virtual Collocation 2-Wire Cross Connect, Exchange Port 2-Wire ISDN			UEPTX	VE1R2	0.0309	24.68	23.68	12.14	10.95		7.86				
	Virtual Collocation 4-Wire Cross Connect, Exchange Port 4-Wire ISDN DS1			UEPEX	VE1R4	1.48	44.23	31.98	12.81	11.57		7.86				
	Note: Rates displaying an "R" in Interim column are interim and subject to rate true-up as set forth in General Terms and Conditions.															

COLLOCATION - Louisiana

CATEGORY	RATE ELEMENTS	Interim	Zone	BCS	USOC	RATES ($) Rec	Nonrecurring First	Nonrecurring Add'l	Nonrecurring Disconnect First	Nonrecurring Disconnect Add'l	Svc Order Submitted Elec per LSR SOMEC	Svc Order Submitted Manually per LSR SOMAN	Attachment: 4 Incremental Charge - Manual Svc Order vs. Electronic-1st SOMAN	Attachment: 4 Incremental Charge - Manual Svc Order vs. Electronic-Add'l SOMAN	Exhibit: B Incremental Charge - Manual Svc Order vs. Electronic-Disc 1st SOMAN	Exhibit: B Incremental Charge - Manual Svc Order vs. Electronic-Disc Add'l SOMAN
											OSS Rates ($)					
PHYSICAL COLLOCATION																
	Physical Collocation 2-Wire Cross Connect, Exchange Port 2-Wire Analog - Res			UEPSR	PE1R2	0.0318	11.94	11.46				15.20				
	Physical Collocation 2-Wire Cross Connect, Exchange Port 2-Wire Line Side PBX Trunk - Bus			UEPSP	PE1R2	0.0318	11.94	11.46				15.20				
	Physical Collocation 2-Wire Cross Connect, Exchange Port 2-Wire Voice Grade PBX Trunk - Res			UEPSE	PE1R2	0.0318	11.94	11.46				15.20				
	Physical Collocation 2-Wire Cross Connect, Exchange Port 2-Wire Analog - Bus			UEPSB	PE1R2	0.0318	11.94	11.46				15.20				
	Physical Collocation 2-Wire Cross Connect, Exchange Port 2-Wire ISDN			UEPSX	PE1R2	0.0318	11.94	11.46				15.20				
	Physical Collocation 2-Wire Cross Connect, Exchange Port 2-Wire ISDN			UEPTX	PE1R2	0.0318	11.94	11.46				15.20				
	Physical Collocation 4-Wire Cross Connect, Exchange Port 4-Wire ISDN DS1			UEPEX	PE1R4	0.0636	12.04	11.53				15.20				
PHYSICAL COLLOCATION																
	Physical Collocation - Application Fee - Initial			CLO	PE1BA		1,837.24									
	Physical Collocation - Application Fee - Subsequent			CLO	PE1CA		1,533.41									
	Physical Collocation Administrative Only - Application Fee			CLO	PE1BL		741.97									
	Physical Collocation - Space Preparation - Firm Order Processing			CLO	PE1SJ		583.33									
	Physical Collocation - Space Preparation - C.O. Modification per square ft.			CLO	PE1SK	2.31										
	Physical Collocation - Space Preparation - Common Systems Modification per square ft. - Cageless			CLO	PE1SL	2.70										
	Physical Collocation - Space Preparation - Common Systems Modification per Cage			CLO	PE1SM	91.60										
	Physical Collocation - Cable Installation			CLO	PE1BD		841.54	841.54								
	Physical Collocation - Floor Space per Sq. Ft.			CLO	PE1PJ	5.30										
	Physical Collocation - Cable Support Structure, Per Entrance Cable			CLO	PE1PM	18.31										
	Physical Collocation - Power -48V DC Power, per Fused Amp	I		CLO	PE1PL	8.32										
	Physical Collocation - 120V, Single Phase Standby Power Rate			CLO	PE1FB	5.45										
	Physical Collocation - 240V, Single Phase Standby Power Rate			CLO	PE1FD	10.92										
	Physical Collocation - 120V, Three Phase Standby Power Rate			CLO	PE1FE	16.37										
	Physical Collocation - 277V, Three Phase Standby Power Rate			CLO	PE1FG	37.80										
	Physical Collocation - 2-Wire Cross-Connects			UEANL,UEA,UDN,UDC,UAL,UHL,UCL,UEQ, UDL, UNCVX, UNLDX, UNCNX	PE1P2	0.0318	11.94	11.46								
	Physical Collocation - 4-Wire Cross-Connects			CLO, UAL, UDL, UDN, UEA, UHL, UNCVX, UNCDX, UCL	PE1P4	0.0636	12.04	11.53								
	Physical Collocation - DS1 Cross-Connects			CLO,UEANL,UEQ,WDS1L,WDS1S, USL, U1TD1, UXTD1, UNC1X, ULDD1, USLEL, UNLD1, UDL	PE1P1	1.04	21.39	15.47								

COLLOCATION - Louisiana														Attachment: 4		Exhibit: B	
CATEGORY		RATE ELEMENTS	Interim	Zone	BCS	USOC	RATES ($)					Svc Order Submitted Elec per LSR	Svc Order Submitted Manually per LSR	Incremental Charge - Manual Svc Order vs. Electronic-1st	Incremental Charge - Manual Svc Order vs. Electronic-Add'l	Incremental Charge - Manual Svc Order vs. Electronic-Disc 1st	Incremental Charge - Manual Svc Order vs. Electronic-Disc Add'l
							Rec	Nonrecurring		Nonrecurring Disconnect		OSS Rates ($)					
								First	Add'l	First	Add'l	SOMEC	SOMAN	SOMAN	SOMAN	SOMAN	SOMAN
		Physical Collocation - DS3 Cross-Connects			CLO, UE3,U1TD3, UXTD3, UXTS1, UNC3X, UNCSX, ULDD3, U1TS1,ULDS1, UNLD3, UDL	PE1P3	13.21	20.28	14.76								
		Physical Collocation - 2-Fiber Cross-Connect			CLO, ULDO3, ULD12, ULD48, U1TO3, U1T12, U1T48, UDLO3, UDL12, UDF	PE1F2	2.62	20.28	14.76								
		Physical Collocation - 4-Fiber Cross-Connect			CLO, ULDO3, ULD12, ULD48, U1TO3, U1T12, U1T48, UDLO3, UDL12, UDF	PE1F4	4.65	24.81	19.29								
		Physical Collocation - Welded Wire Cage - First 100 Sq. Ft.			CLO	PE1BW	184.50										
		Physical Collocation - Welded Wire Cage - Add'l 50 Sq. Ft.			CLO	PE1CW	18.10										
		Physical Collocation - Security System Per Central Office Per Assignable Sq. Ft.			CLO	PE1AY	0.0224										
		Physical Collocation - Security Access System - New Access Card Activation, per Card			CLO	PE1A1	0.0579	27.50									
		Physical Collocation-Security Access System-Administrative Change, existing Access Card, per Request, per State, per Card			CLO	PE1AA		7.74	7.74								
		Physical Collocation - Security Access System - Replace Lost or Stolen Card, per Card			CLO	PE1AR		22.64	22.64								
		Physical Collocation - Security Access - Initial Key, per Key			CLO	PE1AK		13.01	13.01								
		Physical Collocation - Security Access - Key, Replace Lost or Stolen Key, per Key			CLO	PE1AL		13.01	13.01								
		Physical Collocation - Space Availability Report per premises			CLO	PE1SR		1,044.07	1,044.07								
		POT Bay Arrangements prior to 6/1/99 - 2-Wire Cross-Connect, per cross-connect			UEANL,UEA,UDN,UDC,UAL,UHL,UCL,UEQ,CLO,UDL, UNCVX, UNCDX, UNCNX	PE1PE	0.079										
		POT Bay Arrangements prior to 6/1/99 - 4-Wire Cross-Connect, per cross-connect			UEANL,UEA,UDN,UDC,UAL,UHL,UCL,UEQ,CLO, USL, UNCVX, UNCDX	PE1PF	0.158										
		POT Bay Arrangements prior to 6/1/99 - DS1 Cross-Connect, per cross-connect			UEANL,UEA,UDN,UDC,UAL,UHL,UCL,UEQ,CLO,WDS1L,WDS1S, USL, U1TD1, UXTD1, UNC1X, ULDD1, USLEL, UNLD1	PE1PG	1.12										
		POT Bay Arrangements prior to 6/1/99 - DS3 Cross-Connect, per cross-connect			UEANL,UEA,UDN,UDC,UAL,UHL,UCL,UEQ,CLO,UE3, U1TD3, UXTD3, UXTS1, UNC3X, UNCSX, ULDD3, U1TS1, ULDS1, UNLD3, UDL, UDLSX	PE1PH	9.95										

COLLOCATION - Louisiana														Attachment: 4		Exhibit: B	
CATEGORY		RATE ELEMENTS	Interim	Zone	BCS	USOC	RATES ($)					Svc Order Submitted Elec per LSR	Svc Order Submitted Manually per LSR	Incremental Charge - Manual Svc Order vs. Electronic-1st	Incremental Charge - Manual Svc Order vs. Electronic-Add'l	Incremental Charge - Manual Svc Order vs. Electronic-Disc 1st	Incremental Charge - Manual Svc Order vs. Electronic-Disc Add'l
							Rec	Nonrecurring		Nonrecurring Disconnect		OSS Rates ($)					
								First	Add'l	First	Add'l	SOMEC	SOMAN	SOMAN	SOMAN	SOMAN	SOMAN
		POT Bay Arrangements prior to 6/1/99 - 2-Fiber Cross-Connect, per cross-connect			UEANL,UEA,UDN,UDC,UAL,UHL,UCL,UEQ,CLO, ULDO3, ULD12, ULD48, U1TO3, U1T12, U1T48, UDLO3, UDL12, UDF	PE1B2	33.96										
		POT Bay Arrangements prior to 6/1/99 - 4-Fiber Cross-Connect, per cross-connect			UEANL,UEA,UDN,UDC,UAL,UHL,UCL,UEQ,CLO, ULDO3, ULD12, ULD48, U1TO3, U1T12, U1T48, UDLO3, UDL12, UDF	PE1B4	45.80										
		Physical Collocation - Request Resend of CFA Information, per CLLI			CLO	PE1C9		77.43									
		Recurring Collocation Cable Records - per request			CLO	PE1CU	10.97										
		Recurring Collocation Cable Records - VG/DS0 Cable, per cable record			CLO	PE1CE	5.29										
		Recurring Collocation Cable Records - VG/DS0 Cable, per each 100 pair			CLO	PE1CT	0.08										
		Recurring Collocation Cable Records - DS1, per T1TIE			CLO	PE1C2	0.04										
		Recurring Collocation Cable Records - DS3, per T3TIE			CLO	PE1C4	0.13										
		Recurring Collocation Cable Records - Fiber Cable, per 99 fiber records			CLO	PE1CG	1.37										
		Physical Collocation - Security Escort - Basic, per Half Hour			CLO,CLORS	PE1BT		16.44	10.42								
		Physical Collocation - Security Escort - Overtime, per Half Hour			CLO,CLORS	PE1OT		21.41	13.45								
		Physical Collocation - Security Escort - Premium, per Half Hour			CLO,CLORS	PE1PT		26.38	16.49								
		V to P Conversion, Per Customer Request-Voice Grade			CLO	PE1BV		33.00									
		V to P Conversion, Per Customer Request-DS0			CLO	PE1BO		33.00									
		V to P Conversion, Per Customer Request-DS1			CLO	PE1B1		52.00									
		V to P Conversion, Per Customer request-DS3			CLO	PE1B3		52.00									
		V to P Conversion, Per Customer Request per VG Circuit Reconfigured			CLO	PE1BR		23.00									
		V to P Conversion, Per Customer Request per DS0 Circuit Reconfigured			CLO	PE1BP		23.00									
		V to P Conversion, Per Customer Request per DS1 Circuit Reconfigured			CLO	PE1BS		33.00									
		V to P Conversion, Per Customer Request per DS3 Circuit Reconfigured			CLO	PE1BE		37.00									
		V to P Conversion, Cable Pairs Assigned to Collo Space per 700 prs or fraction thereof			CLO	PE1B7		592.00									
		Physical Collocation - Co-Carrier Cross Connects - Fiber Cable Support Structure, per cable, per linear ft.			CLO,UDF	PE1ES	0.001										
		Physical Collocation - Co-Carrier Cross Connects - Copper/Coax Cable Support Structure, per cable, per lin. ft.			CLO, UE3, USL	PE1DS	0.0015										
		Physical Collocation - Co-Carrier Cross Connects Only - Application Fee, per application			CLO	PE1DT		583.30									
		Physical Collocation - Application to Augment Exsisting Space - Simple			CLO	PE1KS		596.35		1.22							
		Physical Collocation - Application to Augment Exsisting Space - Minor			CLO	PE1KM		836.18		1.22							
		Physical Collocation - Application to Augment Exsisting Space - Intermediate			CLO	PE1K1		1,061.00		1.22							
ADJACENT COLLOCATION																	
		Adjacent Collocation - Space Charge per Sq. Ft.			CLOAC	PE1JA	0.0552										
		Adjacent Collocation - Electrical Facility Charge per Linear Ft.			CLOAC	PE1JC	5.61										

COLLOCATION - Louisiana														Attachment: 4		Exhibit: B	
CATEGORY		RATE ELEMENTS	Interim	Zone	BCS	USOC	RATES ($)					Svc Order Submitted Elec per LSR	Svc Order Submitted Manually per LSR	Incremental Charge - Manual Svc Order vs. Electronic-1st	Incremental Charge - Manual Svc Order vs. Electronic-Add'l	Incremental Charge - Manual Svc Order vs. Electronic-Disc 1st	Incremental Charge - Manual Svc Order vs. Electronic-Disc Add'l
							Rec	Nonrecurring		Nonrecurring Disconnect		OSS Rates ($)					
								First	Add'l	First	Add'l	SOMEC	SOMAN	SOMAN	SOMAN	SOMAN	SOMAN
		Adjacent Collocation - 2-Wire Cross-Connects			CLOAC	PE1P2	0.0245	11.94	11.46								
		Adjacent Collocation - 4-Wire Cross-Connects			UEA,UHL,UDL,UCL, CLOAC	PE1P4	0.0491	12.04	11.53								
		Adjacent Collocation - DS1 Cross-Connects			USL,CLOAC	PE1P1	0.9605	21.39	15.47								
		Adjacent Collocation - DS3 Cross-Connects			CLOAC	PE1P3	13.01	20.28	14.76								
		Adjacent Collocation - 2-Fiber Cross-Connect			CLOAC	PE1F2	2.20	20.28	14.76								
		Adjacent Collocation - 4-Fiber Cross-Connect			CLOAC	PE1F4	4.21	24.81	19.29								
		Adjacent Collocation - Application Fee			CLOAC	PE1JB		1,543.20									
		Adjacent Collocation - 120V, Single Phase Standby Power Rate per AC Breaker Amp			CLOAC	PE1FB	5.45										
		Adjacent Collocation - 240V, Single Phase Standby Power Rate per AC Breaker Amp			CLOAC	PE1FD	10.92										
		Adjacent Collocation - 120V, Three Phase Standby Power Rate per AC Breaker Amp			CLOAC	PE1FE	16.37										
		Adjacent Collocation - 277V, Three Phase Standby Power Rate per AC Breaker Amp			CLOAC	PE1FG	37.80										
PHYSICAL COLLOCATION IN THE REMOTE SITE																	
		Physical Collocation in the Remote Site - Application Fee			CLORS	PE1RA		298.80	298.80								
		Cabinet Space in the Remote Site per Bay/ Rack			CLORS	PE1RB	225.39										
		Physical Collocation in the Remote Site - Security Access - Key			CLORS	PE1RD		13.01	13.01								
		Physical Collocation in the Remote Site - Space Availability Report per Premises Requested			CLORS	PE1SR		112.52	112.52								
		Physical Collocation in the Remote Site - Remote Site CLLI Code Request, per CLLI Code Requested			CLORS	PE1RE		36.47	36.47								
		Remote Site DLEC Data (BRSDD), per Compact Disk, per CO			CLORS	PE1RR		233.21									
PHYSICAL COLLOCATION IN THE REMOTE SITE - ADJACENT																	
		Remote Site-Adjacent Collocation - AC Power, per breaker amp			CLORS	PE1RS	6.27										
		Remote Site-Adjacent Collocation - Real Estate, per square foot			CLORS	PE1RT	0.134										
		Remote Site-Adjacent Collocation-Application Fee			CLORS	PE1RU		755.62	755.62								
	NOTE: If Security Escort and/or Add'l Engineering Fees become necessary for remote site collocation, the Parties will negotiate appropriate rates.																
VIRTUAL COLLOCATION																	
		Virtual Collocation - Application Fee			AMTFS	EAF		1,770.40					15.20				
		Virtual Collocation - Cable Installation Cost, per cable			AMTFS	ESPCX		841.54					15.20				
		Virtual Collocation - Floor Space, per sq. ft.			AMTFS	ESPVX	3.20										
		Virtual Collocation - Power, per fused amp			AMTFS	ESPAX	8.32										
		Virtual Collocation - Cable Support Structure, per entrance cable			AMTFS	ESPSX	16.02										
		Virtual Collocation - 2-wire Cross Connects (loop)			UEANL,UEA,UDN,UDC,UAL,UHL,UCL,UEQ, AMTFS, UDL, UNCVX, UNCDX, UNCNX	UEAC2	0.0296	11.94	11.46				15.20				
		Virtual Collocation - 4-wire Cross Connects (loop)			UEA,UHL,UCL,UDL, AMTFS, UAL, UDN, UNCVX, UNCDX	UEAC4	0.0591	12.04	11.53				15.20				
		Virtual Collocation - 2-Fiber Cross Connects			AMTFS,UDL12, UDLO3, U1T48, U1T12, U1T03, ULDO3, ULD12, ULD48, UDF	CNC2F	2.65	20.29	14.76				15.20				
		Virtual Collocation - 4-Fiber Cross Connects			AMTFS,UDL12, UDLO3, U1T48, U1T12, U1T03, ULDO3, ULD12, ULD48, UDF	CNC4F	5.31	24.81	19.29				15.20				

COLLOCATION - Louisiana														Attachment: 4		Exhibit: B	
CATEGORY		RATE ELEMENTS	Interim	Zone	BCS	USOC	RATES ($)					Svc Order Submitted Elec per LSR	Svc Order Submitted Manually per LSR	Incremental Charge - Manual Svc Order vs. Electronic-1st	Incremental Charge - Manual Svc Order vs. Electronic-Add'l	Incremental Charge - Manual Svc Order vs. Electronic-Disc 1st	Incremental Charge - Manual Svc Order vs. Electronic-Disc Add'l
							Rec	Nonrecurring		Nonrecurring Disconnect		OSS Rates ($)					
								First	Add'l	First	Add'l	SOMEC	SOMAN	SOMAN	SOMAN	SOMAN	SOMAN
		Virtual collocation - Special Access & UNE, cross-connect per DS1			USL,ULC,AMTFS, ULR, UXTD1, UNC1X, ULDD1, U1TD1, USLEL, UNLD1	CNC1X	1.04	21.39	15.47				15.20				
		Virtual collocation - Special Access & UNE, cross-connect per DS3			USL,ULC,AMTFS,UE3, U1TD3, UXTS1, UXTD3, UNC3X, UNCSX, ULDD3, U1TS1, ULDS1, UDLSX, UNLD3	CND3X	13.21	20.28	14.76				15.20				
		Virtual Collocation - Co-Carrier Cross Connects - Fiber Cable Support Structure, per linear foot			AMTFS	VE1CB	0.0024										
		Virtual Collocation - Co-Carrier Cross Connects - Copper/Coax Cable Support Structure, per linear ft			AMTFS	VE1CD	0.0036										
		Virtual Collocation - Co-Carrier Cross Connects - Fiber Cable Support Structure,per cable			AMTFS	VE1CC		534.79					15.20				
		Virtual Collocation - Co-Carrier Cross Connects - Copper/Coax Cable Support Structure, per cable			AMTFS	VE1CE		534.79					15.20				
		Virtual Collocation Cable Records - per request			AMTFS	VE1BA	10.97										
		Virtual Collocation Cable Records - VG/DS0 Cable, per cable record			AMTFS	VE1BB	5.29										
		Virtual Collocation Cable Records - VG/DS0 Cable, per each 100 pair			AMTFS	VE1BC	0.08										
		Virtual Collocation Cable Records - DS1, per T1TIE			AMTFS	VE1BD	0.04										
		Virtual Collocation Cable Records - DS3, per T3TIE			AMTFS	VE1BE	0.13										
		Virtual Collocation Cable Records - Fiber Cable, per 99 fiber records			AMTFS	VE1BF	1.37										
		Virtual collocation - Security Escort - Basic, per half hour			AMTFS	SPTBX		16.44	10.42				15.20				
		Virtual collocation - Security Escort - Overtime, per half hour			AMTFS	SPTOX		21.41	13.45				15.20				
		Virtual collocation - Security Escort - Premium, per half hour			AMTFS	SPTPX		26.38	16.49				15.20				
		Virtual collocation - Maintenance in CO - Basic, per half hour			AMTFS	CTRLX		27.12	10.42				15.20				
		Virtual collocation - Maintenance in CO - Overtime, per half hour			AMTFS	SPTOM		35.42	13.45				15.20				
		Virtual collocation - Maintenance in CO - Premium per half hour			AMTFS	SPTPM		43.72	16.49				15.20				
VIRTUAL COLLOCATION																	
		Virtual Collocation - 2-wire Cross Connect, Exchange Port 2-Wire Analog - Res			UEPSR	VE1R2	0.0296	11.94	11.46				15.20				
		Virtual Collocation 2-Wire Cross Connect, Exchange Port 2-Wire Line Side PBX Trunk - Bus			UEPSP	VE1R2	0.0296	11.94	11.46				15.20				
		Virtual Collocation 2-Wire Cross Connect, Exchange Port 2-Wire Voice Grade PBX Trunk - Res			UEPSE	VE1R2	0.0296	11.94	11.46				15.20				
		Virtual Collocation 2-Wire Cross Connect, Exchange Port 2-Wire Analog Bus			UEPSB	VE1R2	0.0296	11.94	11.46				15.20				
		Virtual Collocation 2-Wire Cross Connect, Exchnage Port 2-Wire ISDN			UEPSX	VE1R2	0.0296	11.94	11.46				15.20				
		Virtual Collocation 2-Wire Cross Connect, Exchange Port 2-Wire ISDN			UEPTX	VE1R2	0.0296	11.94	11.46				15.20				
		Virtual Collocation 4-Wire Cross Connect, Exchange Port 4-Wire ISDN DS1			UEPEX	VE1R4	0.0591	12.04	11.53				15.20				
	Note: Rates displaying an "R" in Interim column are interim and subject to rate true-up as set forth in General Terms and Conditions.																

COLLOCATION - Mississippi														Attachment: 4		Exhibit: B	
CATEGORY		RATE ELEMENTS	Interim	Zone	BCS	USOC	RATES ($)					Svc Order Submitted Elec per LSR	Svc Order Submitted Manually per LSR	Incremental Charge - Manual Svc Order vs. Electronic-1st	Incremental Charge - Manual Svc Order vs. Electronic-Add'l	Incremental Charge - Manual Svc Order vs. Electronic-Disc 1st	Incremental Charge - Manual Svc Order vs. Electronic-Disc Add'l
							Rec	Nonrecurring		Nonrecurring Disconnect		OSS Rates ($)					
								First	Add'l	First	Add'l	SOMEC	SOMAN	SOMAN	SOMAN	SOMAN	SOMAN
PHYSICAL COLLOCATION																	
		Physical Collocation 2-Wire Cross Connect, Exchange Port 2-Wire Analog - Res			UEPSR	PE1R2	0.0288	12.37	11.87	6.04	5.45		15.75				
		Physical Collocation 2-Wire Cross Connect, Exchange Port 2-Wire Line Side PBX Trunk - Bus			UEPSP	PE1R2	0.0288	12.37	11.87	6.04	5.45		15.75				
		Physical Collocation 2-Wire Cross Connect, Exchange Port 2-Wire Voice Grade PBX Trunk - Res			UEPSE	PE1R2	0.0288	12.37	11.87	6.04	5.45		15.75				
		Physical Collocation 2-Wire Cross Connect, Exchange Port 2-Wire Analog - Bus			UEPSB	PE1R2	0.0288	12.37	11.87	6.04	5.45		15.75				
		Physical Collocation 2-Wire Cross Connect, Exchange Port 2-Wire ISDN			UEPSX	PE1R2	0.0288	12.37	11.87	6.04	5.45		15.75				
		Physical Collocation 2-Wire Cross Connect, Exchange Port 2-Wire ISDN			UEPTX	PE1R2	0.0288	12.37	11.87	6.04	5.45		15.75				
		Physical Collocation 4-Wire Cross Connect, Exchange Port 4-Wire ISDN DS1			UEPEX	PE1R4	0.0576	12.47	11.94	6.59	5.91		15.75				
PHYSICAL COLLOCATION																	
		Physical Collocation - Application Fee - Initial			CLO	PE1BA		1,890.38									
		Physical Collocation - Application Fee - Subsequent			CLO	PE1CA		1,575.69									
		Physical Collocation Administrative Only - Application Fee			CLO	PE1BL		740.76									
		Physical Collocation - Space Preparation - Firm Order Processing	I		CLO	PE1SJ		604.19									
		Physical Collocation - Space Preparation - C.O. Modification per square ft.	I		CLO	PE1SK	2.30										
		Physical Collocation - Space Preparation - Common Systems Modification per square ft. - Cageless	I		CLO	PE1SL	2.52										
		Physical Collocation - Space Preparation - Common Systems Modification per Cage	I		CLO	PE1SM	85.67										
		Physical Collocation - Cable Installation			CLO	PE1BD		926.27	926.27	22.62							
		Physical Collocation - Floor Space per Sq. Ft.			CLO	PE1PJ	5.74										
		Physical Collocation - Cable Support Structure, Per Entrance Cable			CLO	PE1PM	17.42										
		Physical Collocation - Power -48V DC Power, per Fused Amp	I		CLO	PE1PL	7.33										
		Physical Collocation - Power Reduction, Application Fee	I		CLO	PE1PR		398.76									
		Physical Collocation - 120V, Single Phase Standby Power Rate	I		CLO	PE1FB	5.29										
		Physical Collocation - 240V, Single Phase Standby Power Rate	I		CLO	PE1FD	10.58										
		Physical Collocation - 120V, Three Phase Standby Power Rate	I		CLO	PE1FE	15.87										
		Physical Collocation - 277V, Three Phase Standby Power Rate	I		CLO	PE1FG	36.65										
		Physical Collocation - 2-Wire Cross-Connects			UEANL,UEA,UDN,UDC,UAL,UHL,UCL,UEQ, UDL, UNCVX, UNLDX, UNCNX	PE1P2	0.0288	12.37	11.87	6.04	5.45						
		Physical Collocation - 4-Wire Cross-Connects			CLO, UAL, UDL, UDN, UEA, UHL, UNCVX, UNCDX, UCL	PE1P4	0.0576	12.47	11.94	6.59	5.91						
		Physical Collocation - DS1 Cross-Connects			CLO,UEANL,UEQ,WDS1L,WDS1S, USL, U1TD1, UXTD1, UNC1X, ULDD1, USLEL, UNLD1, UDL	PE1P1	1.14	22.16	16.02	6.60	5.97						

COLLOCATION - Mississippi														Attachment: 4		Exhibit: B	
CATEGORY		RATE ELEMENTS	Interim	Zone	BCS	USOC	RATES ($)					Svc Order Submitted Elec per LSR	Svc Order Submitted Manually per LSR	Incremental Charge - Manual Svc Order vs. Electronic-1st	Incremental Charge - Manual Svc Order vs. Electronic-Add'l	Incremental Charge - Manual Svc Order vs. Electronic-Disc 1st	Incremental Charge - Manual Svc Order vs. Electronic-Disc Add'l
							Rec	Nonrecurring		Nonrecurring Disconnect		OSS Rates ($)					
								First	Add'l	First	Add'l	SOMEC	SOMAN	SOMAN	SOMAN	SOMAN	SOMAN
		Physical Collocation - DS3 Cross-Connects			CLO, UE3,U1TD3, UXTD3, UXTS1, UNC3X, UNCSX, ULDD3, U1TS1,ULDS1, UNLD3, UDL	PE1P3	14.49	21.01	15.29	7.61	6.10						
		Physical Collocation - 2-Fiber Cross-Connect			CLO, ULDO3, ULD12, ULD48, U1TO3, U1T12, U1T48, UDLO3, UDL12, UDF	PE1F2	2.87	21.01	15.29	7.61	6.10						
		Physical Collocation - 4-Fiber Cross-Connect			CLO, ULDO3, ULD12, ULD48, U1TO3, U1T12, U1T48, UDLO3, UDL12, UDF	PE1F4	5.10	25.70	19.97	10.01	8.50						
		Physical Collocation - Welded Wire Cage - First 100 Sq. Ft.			CLO	PE1BW	183.20										
		Physical Collocation - Welded Wire Cage - Add'l 50 Sq. Ft.			CLO	PE1CW	17.97										
		Physical Collocation - Security Access System - Security System per Central Office	I		CLO	PE1AX	75.23										
		Physical Collocation - Security Access System - New Access Card Activation, per Card	I		CLO	PE1A1	0.0576	27.95	27.95								
		Physical Collocation-Security Access System-Administrative Change, existing Access Card, per Request, per State, per Card	I		CLO	PE1AA		7.84	7.84								
		Physical Collocation - Security Access System - Replace Lost or Stolen Card, per Card			CLO	PE1AR		22.91	22.91								
		Physical Collocation - Security Access - Initial Key, per Key			CLO	PE1AK		13.17	13.17								
		Physical Collocation - Security Access - Key, Replace Lost or Stolen Key, per Key			CLO	PE1AL		13.17	13.17								
		Physical Collocation - Space Availability Report per premises	I		CLO	PE1SR		1,081.40	1,081.40								
		POT Bay Arrangements prior to 6/1/99 - 2-Wire Cross-Connect, per cross-connect			UEANL,UEA,UDN,UDC,UAL,UHL,UCL,UEQ,CLO,UDL, UNCVX, UNCDX, UNCNX	PE1PE	0.0867										
		POT Bay Arrangements prior to 6/1/99 - 4-Wire Cross-Connect, per cross-connect			UEANL,UEA,UDN,UDC,UAL,UHL,UCL,UEQ,CLO, USL, UNCVX, UNCDX	PE1PF	0.1734										
		POT Bay Arrangements prior to 6/1/99 - DS1 Cross-Connect, per cross-connect			UEANL,UEA,UDN,UDC,UAL,UHL,UCL,UEQ,CLO,WDS1L,WDS1S, USL, U1TD1, UXTD1, UNC1X, ULDD1, USLEL, UNLD1	PE1PG	1.22										
		POT Bay Arrangements prior to 6/1/99 - DS3 Cross-Connect, per cross-connect			UEANL,UEA,UDN,UDC,UAL,UHL,UCL,UEQ,CLO,UE3, U1TD3, UXTD3, UXTS1, UNC3X, UNCSX, ULDD3, U1TS1, ULDS1, UNLD3, UDL, UDLSX	PE1PH	10.91										

COLLOCATION - Mississippi														Attachment: 4		Exhibit: B	
CATEGORY		RATE ELEMENTS	Interim	Zone	BCS	USOC	RATES ($)					Svc Order Submitted Elec per LSR	Svc Order Submitted Manually per LSR	Incremental Charge - Manual Svc Order vs. Electronic-1st	Incremental Charge - Manual Svc Order vs. Electronic-Add'l	Incremental Charge - Manual Svc Order vs. Electronic-Disc 1st	Incremental Charge - Manual Svc Order vs. Electronic-Disc Add'l
							Rec	Nonrecurring		Nonrecurring Disconnect		OSS Rates ($)					
								First	Add'l	First	Add'l	SOMEC	SOMAN	SOMAN	SOMAN	SOMAN	SOMAN
		POT Bay Arrangements prior to 6/1/99 - 2-Fiber Cross-Connect, per cross-connect			UEANL,UEA,UDN,UDC,UAL,UHL,UCL,UEQ,CLO, ULDO3, ULD12, ULD48, U1TO3, U1T12, U1T48, UDLO3, UDL12, UDF	PE1B2	37.26										
		POT Bay Arrangements prior to 6/1/99 - 4-Fiber Cross-Connect, per cross-connect			UEANL,UEA,UDN,UDC,UAL,UHL,UCL,UEQ,CLO, ULDO3, ULD12, ULD48, U1TO3, U1T12, U1T48, UDLO3, UDL12, UDF	PE1B4	50.24										
		Physical Collocation - Request Resend of CFA Information, per CLLI			CLO	PE1C9		77.41									
		Nonrecurring Collocation Cable Records - per request			CLO	PE1CR		763.69	490.94	133.77							
		Nonrecurring Collocation Cable Records - VG/DS0 Cable, per cable record			CLO	PE1CD		328.81		190.22							
		Nonrecurring Collocation Cable Records - VG/DS0 Cable, per each 100 pair			CLO	PE1CO		4.84	4.84	5.93	5.93						
		Nonrecurring Collocation Cable Records - DS1, per T1TIE			CLO	PE1C1		2.27	2.27	2.78	2.78						
		Nonrecurring Collocation Cable Records - DS3, per T3TIE			CLO	PE1C3		7.92	7.92	9.72	9.72						
		Nonrecurring Collocation Cable Records - Fiber Cable, per 99 fiber records			CLO	PE1CB		84.98	84.98	77.58	77.58						
		Physical Collocation - Security Escort - Basic, per Half Hour			CLO,CLORS	PE1BT		17.02	10.79								
		Physical Collocation - Security Escort - Overtime, per Half Hour			CLO,CLORS	PE1OT		22.17	13.94								
		Physical Collocation - Security Escort - Premium, per Half Hour			CLO,CLORS	PE1PT		27.32	17.08								
		V to P Conversion, Per Customer Request-Voice Grade			CLO	PE1BV		33.00									
		V to P Conversion, Per Customer Request-DS0			CLO	PE1BO		33.00									
		V to P Conversion, Per Customer Request-DS1			CLO	PE1B1		52.00									
		V to P Conversion, Per Customer request-DS3			CLO	PE1B3		52.00									
		V to P Conversion, Per Customer Request per VG Circuit Reconfigured			CLO	PE1BR		23.00									
		V to P Conversion, Per Customer Request per DS0 Circuit Reconfigured			CLO	PE1BP		23.00									
		V to P Conversion, Per Customer Request per DS1 Circuit Reconfigured			CLO	PE1BS		33.00									
		V to P Conversion, Per Customer Request per DS3 Circuit Reconfigured			CLO	PE1BE		37.00									
		V to P Conversion, Cable Pairs Assigned to Collo Space per 700 prs or fraction thereof			CLO	PE1B7		592.00									
		Physical Collocation - Co-Carrier Cross Connects - Fiber Cable Support Structure, per cable, per linear ft.			CLO,UDF	PE1ES	0.001										
		Physical Collocation - Co-Carrier Cross Connects - Copper/Coax Cable Support Structure, per cable, per lin. ft.			CLO, UE3, USL	PE1DS	0.0015										
		Physical Collocation - Co-Carrier Cross Connects Only - Application Fee, per application			CLO	PE1DT		583.13									
		Physical Collocation - Application to Augment Exsisting Space - Simple			CLO	PE1KS		597.34		1.22							
		Physical Collocation - Application to Augment Exsisting Space - Minor			CLO	PE1KM		837.57		1.22							
		Physical Collocation - Application to Augment Exsisting Space - Intermediate			CLO	PE1K1		1,063.00		1.22							
ADJACENT COLLOCATION																	
		Adjacent Collocation - Space Charge per Sq. Ft.			CLOAC	PE1JA	0.0678										
		Adjacent Collocation - Electrical Facility Charge per Linear Ft.			CLOAC	PE1JC	4.68										

COLLOCATION - Mississippi														Attachment: 4		Exhibit: B	
CATEGORY		RATE ELEMENTS	Interim	Zone	BCS	USOC	RATES ($)					Svc Order Submitted Elec per LSR	Svc Order Submitted Manually per LSR	Incremental Charge - Manual Svc Order vs. Electronic-1st	Incremental Charge - Manual Svc Order vs. Electronic-Add'l	Incremental Charge - Manual Svc Order vs. Electronic-Disc 1st	Incremental Charge - Manual Svc Order vs. Electronic-Disc Add'l
							Rec	Nonrecurring		Nonrecurring Disconnect		OSS Rates ($)					
								First	Add'l	First	Add'l	SOMEC	SOMAN	SOMAN	SOMAN	SOMAN	SOMAN
		Adjacent Collocation - 2-Wire Cross-Connects			CLOAC	PE1P2	0.0223	12.37	11.87	6.04	5.45						
		Adjacent Collocation - 4-Wire Cross-Connects			UEA,UHL,UDL,UCL, CLOAC	PE1P4	0.0446	12.47	11.94	6.59	5.91						
		Adjacent Collocation - DS1 Cross-Connects			USL,CLOAC	PE1P1	1.05	22.16	16.02	6.60	5.97						
		Adjacent Collocation - DS3 Cross-Connects			CLOAC	PE1P3	14.27	21.01	15.29	7.61	6.10						
		Adjacent Collocation - 2-Fiber Cross-Connect			CLOAC	PE1F2	2.42	21.01	15.29	7.61	6.10						
		Adjacent Collocation - 4-Fiber Cross-Connect			CLOAC	PE1F4	4.62	25.70	19.97	10.01	8.50						
		Adjacent Collocation - Application Fee			CLOAC	PE1JB		1,585.83									
		Adjacent Collocation - 120V, Single Phase Standby Power Rate per AC Breaker Amp			CLOAC	PE1FB	5.29										
		Adjacent Collocation - 240V, Single Phase Standby Power Rate per AC Breaker Amp			CLOAC	PE1FD	10.58										
		Adjacent Collocation - 120V, Three Phase Standby Power Rate per AC Breaker Amp			CLOAC	PE1FE	15.87										
		Adjacent Collocation - 277V, Three Phase Standby Power Rate per AC Breaker Amp			CLOAC	PE1FG	36.65										
PHYSICAL COLLOCATION IN THE REMOTE SITE																	
		Physical Collocation in the Remote Site - Application Fee			CLORS	PE1RA		309.48		168.63							
		Cabinet Space in the Remote Site per Bay/ Rack			CLORS	PE1RB	210.05										
		Physical Collocation in the Remote Site - Security Access - Key			CLORS	PE1RD		13.17	13.17								
		Physical Collocation in the Remote Site - Space Availability Report per Premises Requested			CLORS	PE1SR		116.54	116.54								
		Physical Collocation in the Remote Site - Remote Site CLLI Code Request, per CLLI Code Requested			CLORS	PE1RE		37.77	37.77								
		Remote Site DLEC Data (BRSDD), per Compact Disk, per CO			CLORS	PE1RR		233.14									
PHYSICAL COLLOCATION IN THE REMOTE SITE - ADJACENT																	
		Remote Site-Adjacent Collocation - AC Power, per breaker amp			CLORS	PE1RS	6.27										
		Remote Site-Adjacent Collocation - Real Estate, per square foot			CLORS	PE1RT	0.134										
		Remote Site-Adjacent Collocation-Application Fee			CLORS	PE1RU		755.62	755.62								
	NOTE: If Security Escort and/or Add'l Engineering Fees become necessary for remote site collocation, the Parties will negotiate appropriate rates.																
VIRTUAL COLLOCATION																	
		Virtual Collocation - Application Fee			AMTFS	EAF		1,212.25		0.51			15.75				
		Virtual Collocation - Cable Installation Cost, per cable			AMTFS	ESPCX		926.27		22.62			15.75				
		Virtual Collocation - Floor Space, per sq. ft.			AMTFS	ESPVX	5.74										
		Virtual Collocation - Power, per fused amp			AMTFS	ESPAX	7.33										
		Virtual Collocation - Cable Support Structure, per entrance cable			AMTFS	ESPSX	15.24										
		Virtual Collocation - 2-wire Cross Connects (loop)			UEANL,UEA,UDN,UDC,UAL,UHL,UCL,UEQ, AMTFS, UDL, UNCVX, UNCDX, UNCNX	UEAC2	0.0268	12.37	11.87	6.04	5.45		15.75				
		Virtual Collocation - 4-wire Cross Connects (loop)			UEA,UHL,UCL,UDL, AMTFS, UAL, UDN, UNCVX, UNCDX	UEAC4	0.0536	12.47	11.94	6.59	5.91		15.75				
		Virtual Collocation - 2-Fiber Cross Connects			AMTFS,UDL12, UDLO3, U1T48, U1T12, U1T03, ULDO3, ULD12, ULD48, UDF	CNC2F	2.91	21.01	15.29	7.61	6.10		15.75				
		Virtual Collocation - 4-Fiber Cross Connects			AMTFS,UDL12, UDLO3, U1T48, U1T12, U1T03, ULDO3, ULD12, ULD48, UDF	CNC4F	5.82	25.70	19.97	10.01	8.50		15.75				

COLLOCATION - Mississippi														Attachment: 4		Exhibit: B	
CATEGORY		RATE ELEMENTS	Interim	Zone	BCS	USOC	RATES ($)					Svc Order Submitted Elec per LSR	Svc Order Submitted Manually per LSR	Incremental Charge - Manual Svc Order vs. Electronic-1st	Incremental Charge - Manual Svc Order vs. Electronic-Add'l	Incremental Charge - Manual Svc Order vs. Electronic-Disc 1st	Incremental Charge - Manual Svc Order vs. Electronic-Disc Add'l
							Rec	Nonrecurring		Nonrecurring Disconnect		OSS Rates ($)					
								First	Add'l	First	Add'l	SOMEC	SOMAN	SOMAN	SOMAN	SOMAN	SOMAN
		Virtual Collocation - Special Access & UNE, cross-connect per DS1			USL,ULC,AMTFS, ULR, UXTD1, UNC1X, ULDD1, U1TD1, USLEL, UNLD1	CNC1X	1.14	22.16	16.02	6.60	5.97		15.75				
		Virtual collocation - Special Access & UNE, cross-connect per DS3			USL,ULC,AMTFS,UE3, U1TD3, UXTS1, UXTD3, UNC3X, UNCSX, ULDD3, U1TS1, ULDS1, UDLSX, UNLD3	CND3X	14.49	21.01	15.29	7.61	6.10		15.75				
		Virtual Collocation - Co-Carrier Cross Connects - Fiber Cable Support Structure, per linear foot			AMTFS	VE1CB	0.0025										
		Virtual Collocation - Co-Carrier Cross Connects - Copper/Coax Cable Support Structure, per linear ft			AMTFS	VE1CD	0.0037										
		Virtual Collocation - Co-Carrier Cross Connects - Fiber Cable Support Structure,per cable			AMTFS	VE1CC		534.65					15.75				
		Virtual Collocation - Co-Carrier Cross Connects - Copper/Coax Cable Support Structure, per cable			AMTFS	VE1CE		534.65					15.75				
		Virtual Collocation Cable Records - per request			AMTFS	VE1BA		763.69	490.94	133.77	133.77						
		Virtual Collocation Cable Records - VG/DS0 Cable, per cable record			AMTFS	VE1BB		328.81	328.81	190.22	190.22						
		Virtual Collocation Cable Records - VG/DS0 Cable, per each 100 pair			AMTFS	VE1BC		4.84	4.84	5.93	5.93						
		Virtual Collocation Cable Records - DS1, per T1TIE			AMTFS	VE1BD		2.27	2.27	2.78	2.78						
		Virtual Collocation Cable Records - DS3, per T3TIE			AMTFS	VE1BE		7.92	7.92	9.72	9.72						
		Virtual Collocation Cable Records - Fiber Cable, per 99 fiber records			AMTFS	VE1BF		84.98	84.98	77.58	77.58						
		Virtual collocation - Security Escort - Basic, per half hour			AMTFS	SPTBX		17.02	10.79				15.75				
		Virtual collocation - Security Escort - Overtime, per half hour			AMTFS	SPTOX		22.17	13.94				15.75				
		Virtual collocation - Security Escort - Premium, per half hour			AMTFS	SPTPX		27.32	17.08				15.75				
		Virtual collocation - Maintenance in CO - Basic, per half hour			AMTFS	CTRLX		28.09	10.79				15.75				
		Virtual collocation - Maintenance in CO - Overtime, per half hour			AMTFS	SPTOM		36.69	13.94				15.75				
		Virtual collocation - Maintenance in CO - Premium per half hour			AMTFS	SPTPM		45.28	17.08				15.75				
VIRTUAL COLLOCATION																	
		Virtual Collocation - 2-wire Cross Connect, Exchange Port 2-Wire Analog - Res			UEPSR	VE1R2	0.0268	12.37	11.87	6.04	5.45		15.75				
		Virtual Collocation 2-Wire Cross Connect, Exchange Port 2-Wire Line Side PBX Trunk - Bus			UEPSP	VE1R2	0.0268	12.37	11.87	6.04	5.45		15.75				
		Virtual Collocation 2-Wire Cross Connect, Exchange Port 2-Wire Voice Grade PBX Trunk - Res			UEPSE	VE1R2	0.0268	12.37	11.87	6.04	5.45		15.75				
		Virtual Collocation 2-Wire Cross Connect, Exchange Port 2-Wire Analog Bus			UEPSB	VE1R2	0.0268	12.37	11.87	6.04	5.45		15.75				
		Virtual Collocation 2-Wire Cross Connect, Exchnage Port 2-Wire ISDN			UEPSX	VE1R2	0.0268	12.37	11.87	6.04	5.45		15.75				
		Virtual Collocation 2-Wire Cross Connect, Exchange Port 2-Wire ISDN			UEPTX	VE1R2	0.0268	12.37	11.87	6.04	5.45		15.75				
		Virtual Collocation 4-Wire Cross Connect, Exchange Port 4-Wire ISDN DS1			UEPEX	VE1R4	0.0536	12.47	11.94	6.59	5.91		15.75				
	Note: Rates displaying an "R" in Interim column are interim and subject to rate true-up as set forth in General Terms and Conditions.																

COLLOCATION - North Carolina

CATEGORY	RATE ELEMENTS	Interim	Zone	BCS	USOC	RATES ($) Rec	Nonrecurring First	Nonrecurring Add'l	Nonrecurring Disconnect First	Nonrecurring Disconnect Add'l	Svc Order Submitted Elec per LSR SOMEC	Svc Order Submitted Manually per LSR SOMAN	Attachment: 4 Incremental Charge - Manual Svc Order vs. Electronic-1st SOMAN	Attachment: 4 Incremental Charge - Manual Svc Order vs. Electronic-Add'l SOMAN	Exhibit: B Incremental Charge - Manual Svc Order vs. Electronic-Disc 1st SOMAN	Exhibit: B Incremental Charge - Manual Svc Order vs. Electronic-Disc Add'l SOMAN
							OSS Rates ($)									
PHYSICAL COLLOCATION																
	Physical Collocation 2-Wire Cross Connect, Exchange Port 2-Wire Analog - Res			UEPSR	PE1R2	0.32	41.78	39.23					26.94	12.76		
	Physical Collocation 2-Wire Cross Connect, Exchange Port 2-Wire Line Side PBX Trunk - Bus			UEPSP	PE1R2	0.32	41.78	39.23					26.94	12.76		
	Physical Collocation 2-Wire Cross Connect, Exchange Port 2-Wire Voice Grade PBX Trunk - Res			UEPSE	PE1R2	0.32	41.78	39.23					26.94	12.76		
	Physical Collocation 2-Wire Cross Connect, Exchange Port 2-Wire Analog - Bus			UEPSB	PE1R2	0.32	41.78	39.23					26.94	12.76		
	Physical Collocation 2-Wire Cross Connect, Exchange Port 2-Wire ISDN			UEPSX	PE1R2	0.32	41.78	39.23					26.94	12.76		
	Physical Collocation 2-Wire Cross Connect, Exchange Port 2-Wire ISDN			UEPTX	PE1R2	0.32	41.78	39.23					26.94	12.76		
	Physical Collocation 4-Wire Cross Connect, Exchange Port 4-Wire ISDN DS1			UEPEX	PE1R4	0.64	41.91	39.25					26.94	12.76		
PHYSICAL COLLOCATION																
	Physical Collocation - Application Fee - Initial	I		CLO	PE1BA		2,322.00									
	Physical Collocation - Application Fee - Subsequent			CLO	PE1CA		2,311.00									
	Physical Collocation Administrative Only - Application Fee			CLO	PE1BL		741.44									
	Physical Collocation - Space Preparation - Firm Order Processing			CLO	PE1SJ		1,196.00									
	Physical Collocation - Space Preparation - C.O. Modification per square ft.	I		CLO	PE1SK	2.42										
	Physical Collocation - Space Preparation - Common Systems Modification per square ft. - Cageless	I		CLO	PE1SL	2.88										
	Physical Collocation - Space Preparation - Common Systems Modification per Cage	I		CLO	PE1SM	97.98										
	Space Preparation Fees - Power Per Nominal -48V Dc Amp	I		CLO	PE1FH	5.76										
	Physical Collocation - Cable Installation	I		CLO	PE1BD		1,701.00	1,701.00								
	Physical Collocation - Floor Space per Sq. Ft.	I		CLO	PE1PJ	4.77										
	Physical Collocation - Cable Support Structure, Per Entrance Cable	I		CLO	PE1PM	20.57										
	Physical Collocation - Power -48V DC Power, per Fused Amp	I		CLO	PE1PL	7.65										
	Physical Collocation - Power Reduction, Application Fee	I		CLO	PE1PR		399.13									
	Physical Collocation - 120V, Single Phase Standby Power Rate	I		CLO	PE1FB	5.50										
	Physical Collocation - 240V, Single Phase Standby Power Rate	I		CLO	PE1FD	11.01										
	Physical Collocation - 120V, Three Phase Standby Power Rate	I		CLO	PE1FE	16.51										
	Physical Collocation - 277V, Three Phase Standby Power Rate	I		CLO	PE1FG	38.12										
	Physical Collocation - 2-Wire Cross-Connects	I		UEANL,UEA,UDN,UDC,UAL,UHL,UCL,UEQ, UDL, UNCVX, UNLDX, UNCNX	PE1P2	0.0309	33.53	31.65								
	Physical Collocation - 4-Wire Cross-Connects	I		CLO, UAL, UDL, UDN, UEA, UHL, UNCVX, UNCDX, UCL	PE1P4	0.0618	33.67	31.70								
	Physical Collocation - DS1 Cross-Connects	I		CLO,UEANL,UEQ,WDS1L,WDS1S, USL, U1TD1, UXTD1, UNC1X, ULDD1, USLEL, UNLD1, UDL	PE1P1	1.38	52.87	39.86								

COLLOCATION - North Carolina														Attachment: 4		Exhibit: B	
CATEGORY		RATE ELEMENTS	Interim	Zone	BCS	USOC	RATES ($)					Svc Order Submitted Elec per LSR	Svc Order Submitted Manually per LSR	Incremental Charge - Manual Svc Order vs. Electronic-1st	Incremental Charge - Manual Svc Order vs. Electronic-Add'l	Incremental Charge - Manual Svc Order vs. Electronic-Disc 1st	Incremental Charge - Manual Svc Order vs. Electronic-Disc Add'l
							Rec	Nonrecurring		Nonrecurring Disconnect		OSS Rates ($)					
								First	Add'l	First	Add'l	SOMEC	SOMAN	SOMAN	SOMAN	SOMAN	SOMAN
		Physical Collocation - DS3 Cross-Connects	I		CLO, UE3,U1TD3, UXTD3, UXTS1, UNC3X, UNCSX, ULDD3, U1TS1,ULDS1, UNLD3, UDL	PE1P3	17.62	51.97	38.59								
		Physical Collocation - 2-Fiber Cross-Connect	I		CLO, ULDO3, ULD12, ULD48, U1TO3, U1T12, U1T48, UDLO3, UDL12, UDF	PE1F2	3.50	51.97	38.59								
		Physical Collocation - 4-Fiber Cross-Connect	I		CLO, ULDO3, ULD12, ULD48, U1TO3, U1T12, U1T48, UDLO3, UDL12, UDF	PE1F4	6.20	64.53	51.15								
		Physical Collocation - Welded Wire Cage - First 100 Sq. Ft.	I		CLO	PE1BW		559.81									
		Physical Collocation - Welded Wire Cage - Add'l 50 Sq. Ft.	I		CLO	PE1CW		25.37									
		Physical Collocation - Security System Per Central Office Per Assignable Sq. Ft.			CLO	PE1AY	0.0135										
		Physical Collocation - Security Access System - Security System per Central Office	I		CLO	PE1AX	41.03										
		Physical Collocation - Security Access System - New Access Card Activation, per Card	I		CLO	PE1A1	0.062	15.00									
		Physical Collocation-Security Access System-Administrative Change, existing Access Card, per Request, per State, per Card	I		CLO	PE1AA		15.51									
		Physical Collocation - Security Access System - Replace Lost or Stolen Card, per Card			CLO	PE1AR		15.00									
		Physical Collocation - Security Access - Initial Key, per Key			CLO	PE1AK		15.00									
		Physical Collocation - Security Access - Key, Replace Lost or Stolen Key, per Key			CLO	PE1AL		15.00									
		Physical Collocation - Space Availability Report per premises	I		CLO	PE1SR		2,140.00	2,140.00								
		POT Bay Arrangements prior to 6/1/99 - 2-Wire Cross-Connect, per cross-connect			UEANL,UEA,UDN,UDC,UAL,UHL,UCL,UEQ,CLO,UDL, UNCVX, UNCDX, UNCNX	PE1PE	0.1054										
		POT Bay Arrangements prior to 6/1/99 - 4-Wire Cross-Connect, per cross-connect			UEANL,UEA,UDN,UDC,UAL,UHL,UCL,UEQ,CLO, USL, UNCVX, UNCDX	PE1PF	0.2108										
		POT Bay Arrangements prior to 6/1/99 - DS1 Cross-Connect, per cross-connect			UEANL,UEA,UDN,UDC,UAL,UHL,UCL,UEQ,CLO,WDS1L,WDS1S, USL, U1TD1, UXTD1, UNC1X, ULDD1, USLEL, UNLD1	PE1PG	1.49										
		POT Bay Arrangements prior to 6/1/99 - DS3 Cross-Connect, per cross-connect			UEANL,UEA,UDN,UDC,UAL,UHL,UCL,UEQ,CLO,UE3, U1TD3, UXTD3, UXTS1, UNC3X, UNCSX, ULDD3, U1TS1, ULDS1, UNLD3, UDL, UDLSX	PE1PH	13.27										

COLLOCATION - North Carolina														Attachment: 4		Exhibit: B	
CATEGORY		RATE ELEMENTS	Interim	Zone	BCS	USOC	RATES ($)					Svc Order Submitted Elec per LSR	Svc Order Submitted Manually per LSR	Incremental Charge - Manual Svc Order vs. Electronic-1st	Incremental Charge - Manual Svc Order vs. Electronic-Add'l	Incremental Charge - Manual Svc Order vs. Electronic-Disc 1st	Incremental Charge - Manual Svc Order vs. Electronic-Disc Add'l
							Rec	Nonrecurring		Nonrecurring Disconnect		OSS Rates ($)					
								First	Add'l	First	Add'l	SOMEC	SOMAN	SOMAN	SOMAN	SOMAN	SOMAN
		POT Bay Arrangements prior to 6/1/99 - 2-Fiber Cross-Connect, per cross-connect			UEANL,UEA,UDN,UDC,UAL,UHL,UCL,UEQ,CLO, ULDO3, ULD12, ULD48, U1TO3, U1T12, U1T48, UDLO3, UDL12, UDF	PE1B2	45.30										
		POT Bay Arrangements prior to 6/1/99 - 4-Fiber Cross-Connect, per cross-connect			UEANL,UEA,UDN,UDC,UAL,UHL,UCL,UEQ,CLO, ULDO3, ULD12, ULD48, U1TO3, U1T12, U1T48, UDLO3, UDL12, UDF	PE1B4	61.09										
		Physical Collocation - Request Resend of CFA Information, per CLLI			CLO	PE1C9		77.48									
		Nonrecurring Collocation Cable Records - per request			CLO	PE1CR		1,707.00									
		Nonrecurring Collocation Cable Records - VG/DS0 Cable, per cable record			CLO	PE1CD		923.08									
		Nonrecurring Collocation Cable Records - VG/DS0 Cable, per each 100 pair			CLO	PE1CO		18.02	18.02								
		Nonrecurring Collocation Cable Records - DS1, per T1TIE			CLO	PE1C1		8.43	8.43								
		Nonrecurring Collocation Cable Records - DS3, per T3TIE			CLO	PE1C3		29.51	29.51								
		Nonrecurring Collocation Cable Records - Fiber Cable, per 99 fiber records			CLO	PE1CB		278.82	278.82								
		Physical Collocation - Security Escort - Basic, per Half Hour			CLO,CLORS	PE1BT		33.68	21.34								
		Physical Collocation - Security Escort - Overtime, per Half Hour			CLO,CLORS	PE1OT		43.87	27.57								
		Physical Collocation - Security Escort - Premium, per Half Hour			CLO,CLORS	PE1PT		54.06	33.80								
		V to P Conversion, Per Customer Request-Voice Grade			CLO	PE1BV		33.00									
		V to P Conversion, Per Customer Request-DS0			CLO	PE1BO		33.00									
		V to P Conversion, Per Customer Request-DS1			CLO	PE1B1		52.00									
		V to P Conversion, Per Customer request-DS3			CLO	PE1B3		52.00									
		V to P Conversion, Per Customer Request per VG Circuit Reconfigured			CLO	PE1BR		23.00									
		V to P Conversion, Per Customer Request per DS0 Circuit Reconfigured			CLO	PE1BP		23.00									
		V to P Conversion, Per Customer Request per DS1 Circuit Reconfigured			CLO	PE1BS		33.00									
		V to P Conversion, Per Customer Request per DS3 Circuit Reconfigured			CLO	PE1BE		37.00									
		V to P Conversion, Cable Pairs Assigned to Collo Space per 700 prs or fraction thereof			CLO	PE1B7		592.00									
		Physical Collocation - Co-Carrier Cross Connects - Fiber Cable Support Structure, per cable, per linear ft.			CLO,UDF	PE1ES	0.0028										
		Physical Collocation - Co-Carrier Cross Connects - Copper/Coax Cable Support Structure, per cable, per lin. ft.			CLO, UE3, USL	PE1DS	0.0041										
		Physical Collocation - Co-Carrier Cross Connects Only - Application Fee, per application			CLO	PE1DT		583.66									
		Physical Collocation - Application to Augment Exsisting Space - Simple			CLO	PE1KS		575.93		1.16							
		Physical Collocation - Application to Augment Exsisting Space - Minor			CLO	PE1KM		806.66		1.16							
		Physical Collocation - Application to Augment Exsisting Space - Intermediate			CLO	PE1K1		1,023.00		1.16							
ADJACENT COLLOCATION																	
		Adjacent Collocation - Space Charge per Sq. Ft.			CLOAC	PE1JA	0.1555										
		Adjacent Collocation - Electrical Facility Charge per Linear Ft.			CLOAC	PE1JC	5.78										

COLLOCATION - North Carolina														Attachment: 4		Exhibit: B	
CATEGORY		RATE ELEMENTS	Interim	Zone	BCS	USOC	RATES ($)					Svc Order Submitted Elec per LSR	Svc Order Submitted Manually per LSR	Incremental Charge - Manual Svc Order vs. Electronic-1st	Incremental Charge - Manual Svc Order vs. Electronic-Add'l	Incremental Charge - Manual Svc Order vs. Electronic-Disc 1st	Incremental Charge - Manual Svc Order vs. Electronic-Disc Add'l
							Rec	Nonrecurring		Nonrecurring Disconnect		OSS Rates ($)					
								First	Add'l	First	Add'l	SOMEC	SOMAN	SOMAN	SOMAN	SOMAN	SOMAN
		Adjacent Collocation - 2-Wire Cross-Connects			CLOAC	PE1P2	0.0239	33.53	31.65								
		Adjacent Collocation - 4-Wire Cross-Connects			UEA,UHL,UDL,UCL, CLOAC	PE1P4	0.0477	33.67	31.70								
		Adjacent Collocation - DS1 Cross-Connects			USL,CLOAC	PE1P1	1.28	52.87	39.86								
		Adjacent Collocation - DS3 Cross-Connects			CLOAC	PE1P3	17.35	51.97	38.59								
		Adjacent Collocation - 2-Fiber Cross-Connect			CLOAC	PE1F2	2.94	51.97	38.59								
		Adjacent Collocation - 4-Fiber Cross-Connect			CLOAC	PE1F4	5.62	64.53	51.15								
		Adjacent Collocation - Application Fee			CLOAC	PE1JB		3,139.00									
		Adjacent Collocation - 120V, Single Phase Standby Power Rate per AC Breaker Amp			CLOAC	PE1FB	5.50										
		Adjacent Collocation - 240V, Single Phase Standby Power Rate per AC Breaker Amp			CLOAC	PE1FD	11.01										
		Adjacent Collocation - 120V, Three Phase Standby Power Rate per AC Breaker Amp			CLOAC	PE1FE	16.51										
		Adjacent Collocation - 277V, Three Phase Standby Power Rate per AC Breaker Amp			CLOAC	PE1FG	38.12										
PHYSICAL COLLOCATION IN THE REMOTE SITE																	
		Physical Collocation in the Remote Site - Application Fee			CLORS	PE1RA		865.34	865.34								
		Cabinet Space in the Remote Site per Bay/ Rack			CLORS	PE1RB	254.02										
		Physical Collocation in the Remote Site - Security Access - Key			CLORS	PE1RD		26.06	26.06								
		Physical Collocation in the Remote Site - Space Availability Report per Premises Requested			CLORS	PE1SR		230.60	230.60								
		Physical Collocation in the Remote Site - Remote Site CLLI Code Request, per CLLI Code Requested			CLORS	PE1RE		74.74	74.74								
		Remote Site DLEC Data (BRSDD), per Compact Disk, per CO			CLORS	PE1RR		232.94									
PHYSICAL COLLOCATION IN THE REMOTE SITE - ADJACENT																	
		Remote Site-Adjacent Collocation - AC Power, per breaker amp			CLORS	PE1RS	6.27										
		Remote Site-Adjacent Collocation - Real Estate, per square foot			CLORS	PE1RT	0.134										
		Remote Site-Adjacent Collocation-Application Fee			CLORS	PE1RU		755.62	755.62								
	NOTE: If Security Escort and/or Add'l Engineering Fees become necessary for remote site collocation, the Parties will negotiate appropriate rates.																
VIRTUAL COLLOCATION																	
		Virtual Collocation - Application Fee			AMTFS	EAF		2,848.30	2,848.30					26.94	12.76		
		Virtual Collocation - Cable Installation Cost, per cable			AMTFS	ESPCX		2,750.00	2,750.00					26.94	12.76		
		Virtual Collocation - Floor Space, per sq. ft.			AMTFS	ESPVX	3.20										
		Virtual Collocation - Power, per fused amp			AMTFS	ESPAX	3.48										
		Virtual Collocation - Cable Support Structure, per entrance cable			AMTFS	ESPSX	13.35										
		Virtual Collocation - 2-wire Cross Connects (loop)			UEANL,UEA,UDN,UDC,UAL,UHL,UCL,UEQ, AMTFS, UDL, UNCVX, UNCDX, UNCNX	UEAC2	0.09	41.78	39.23	4.75	4.75			26.94	12.76		
		Virtual Collocation - 4-wire Cross Connects (loop)			UEA,UHL,UCL,UDL, AMTFS, UAL, UDN, UNCVX, UNCDX	UEAC4	0.18	41.91	39.25	4.73	4.73			26.94	12.76		
		Virtual Collocation - 2-Fiber Cross Connects			AMTFS,UDL12, UDLO3, U1T48, U1T12, U1T03, ULDO3, ULD12, ULD48, UDF	CNC2F	15.99	67.34	48.55					26.94	12.76		
		Virtual Collocation - 4-Fiber Cross Connects			AMTFS,UDL12, UDLO3, U1T48, U1T12, U1T03, ULDO3, ULD12, ULD48, UDF	CNC4F	28.74	82.35	63.56					26.94	12.76		

COLLOCATION - North Carolina														Attachment: 4		Exhibit: B	
CATEGORY		RATE ELEMENTS	Interim	Zone	BCS	USOC	RATES ($)					Svc Order Submitted Elec per LSR	Svc Order Submitted Manually per LSR	Incremental Charge - Manual Svc Order vs. Electronic-1st	Incremental Charge - Manual Svc Order vs. Electronic-Add'l	Incremental Charge - Manual Svc Order vs. Electronic-Disc 1st	Incremental Charge - Manual Svc Order vs. Electronic-Disc Add'l
							Rec	Nonrecurring		Nonrecurring Disconnect		OSS Rates ($)					
								First	Add'l	First	Add'l	SOMEC	SOMAN	SOMAN	SOMAN	SOMAN	SOMAN
		Virtual collocation - Special Access & UNE, cross-connect per DS1			USL,ULC,AMTFS, ULR, UXTD1, UNC1X, ULDD1, U1TD1, USLEL, UNLD1	CNC1X	0.97	71.02	51.08					26.94	12.76		
		Virtual collocation - Special Access & UNE, cross-connect per DS3			USL,ULC,AMTFS,UE3, U1TD3, UXTS1, UXTD3, UNC3X, UNCSX, ULDD3, U1TS1, ULDS1, UDLSX, UNLD3	CND3X	56.25	151.90	11.83					26.94	12.76		
		Virtual Collocation - Co-Carrier Cross Connects - Fiber Cable Support Structure, per linear foot			AMTFS	VE1CB	0.0028										
		Virtual Collocation - Co-Carrier Cross Connects - Copper/Coax Cable Support Structure, per linear ft			AMTFS	VE1CD	0.0041										
		Virtual Collocation - Co-Carrier Cross Connects - Fiber Cable Support Structure,per cable			AMTFS	VE1CC		532.72						26.94	12.76		
		Virtual Collocation - Co-Carrier Cross Connects - Copper/Coax Cable Support Structure, per cable			AMTFS	VE1CE		532.72						26.94	12.76		
		Virtual Collocation Cable Records - per request			AMTFS	VE1BA		1,707.00									
		Virtual Collocation Cable Records - VG/DS0 Cable, per cable record			AMTFS	VE1BB		923.08									
		Virtual Collocation Cable Records - VG/DS0 Cable, per each 100 pair			AMTFS	VE1BC		18.02	18.02								
		Virtual Collocation Cable Records - DS1, per T1TIE			AMTFS	VE1BD		8.43	8.43								
		Virtual Collocation Cable Records - DS3, per T3TIE			AMTFS	VE1BE		29.51	29.51								
		Virtual Collocation Cable Records - Fiber Cable, per 99 fiber records			AMTFS	VE1BF		278.82	278.82								
		Virtual collocation - Security Escort - Basic, per half hour			AMTFS	SPTBX		41.00	25.00					26.94	12.76		
		Virtual collocation - Security Escort - Overtime, per half hour			AMTFS	SPTOX		48.00	30.00					26.94	12.76		
		Virtual collocation - Security Escort - Premium, per half hour			AMTFS	SPTPX		55.00	35.00					26.94	12.76		
		Virtual collocation - Maintenance in CO - Basic, per half hour			AMTFS	CTRLX		30.64	30.64					26.94	12.76		
		Virtual collocation - Maintenance in CO - Overtime, per half hour			AMTFS	SPTOM		35.77	35.77					26.94	12.76		
		Virtual collocation - Maintenance in CO - Premium per half hour			AMTFS	SPTPM		40.90	40.90					26.94	12.76		
VIRTUAL COLLOCATION																	
		Virtual Collocation - 2-wire Cross Connect, Exchange Port 2-Wire Analog - Res			UEPSR	VE1R2	0.09	41.78	39.23					26.94	12.76		
		Virtual Collocation 2-Wire Cross Connect, Exchange Port 2-Wire Line Side PBX Trunk - Bus			UEPSP	VE1R2	0.09	41.78	39.23					26.94	12.76		
		Virtual Collocation 2-Wire Cross Connect, Exchange Port 2-Wire Voice Grade PBX Trunk - Res			UEPSE	VE1R2	0.09	41.78	39.23					26.94	12.76		
		Virtual Collocation 2-Wire Cross Connect, Exchange Port 2-Wire Analog Bus			UEPSB	VE1R2	0.09	41.78	39.23					26.94	12.76		
		Virtual Collocation 2-Wire Cross Connect, Exchnage Port 2-Wire ISDN			UEPSX	VE1R2	0.09	41.78	39.23					26.94	12.76		
		Virtual Collocation 2-Wire Cross Connect, Exchange Port 2-Wire ISDN			UEPTX	VE1R2	0.09	41.78	39.23					26.94	12.76		
		Virtual Collocation 4-Wire Cross Connect, Exchange Port 4-Wire ISDN DS1			UEPEX	VE1R4	0.18	41.91	39.25					26.94	12.76		
	Note: Rates displaying an "R" in Interim column are interim and subject to rate true-up as set forth in General Terms and Conditions.																

COLLOCATION - South Carolina														Attachment: 4		Exhibit: B	
CATEGORY		RATE ELEMENTS	Interim	Zone	BCS	USOC	RATES ($)					Svc Order Submitted Elec per LSR	Svc Order Submitted Manually per LSR	Incremental Charge - Manual Svc Order vs. Electronic-1st	Incremental Charge - Manual Svc Order vs. Electronic-Add'l	Incremental Charge - Manual Svc Order vs. Electronic-Disc 1st	Incremental Charge - Manual Svc Order vs. Electronic-Disc Add'l
							Rec	Nonrecurring		Nonrecurring Disconnect		OSS Rates ($)					
								First	Add'l	First	Add'l	SOMEC	SOMAN	SOMAN	SOMAN	SOMAN	SOMAN
PHYSICAL COLLOCATION																	
		Physical Collocation 2-Wire Cross Connect, Exchange Port 2-Wire Analog - Res			UEPSR	PE1R2	0.0341	12.32	11.83	6.04	5.45		15.69				
		Physical Collocation 2-Wire Cross Connect, Exchange Port 2-Wire Line Side PBX Trunk - Bus			UEPSP	PE1R2	0.0341	12.32	11.83	6.04	5.45		15.69				
		Physical Collocation 2-Wire Cross Connect, Exchange Port 2-Wire Voice Grade PBX Trunk - Res			UEPSE	PE1R2	0.0341	12.32	11.83	6.04	5.45		15.69				
		Physical Collocation 2-Wire Cross Connect, Exchange Port 2-Wire Analog - Bus			UEPSB	PE1R2	0.0341	12.32	11.83	6.04	5.45		15.69				
		Physical Collocation 2-Wire Cross Connect, Exchange Port 2-Wire ISDN			UEPSX	PE1R2	0.0341	12.32	11.83	6.04	5.45		15.69				
		Physical Collocation 2-Wire Cross Connect, Exchange Port 2-Wire ISDN			UEPTX	PE1R2	0.0341	12.32	11.83	6.04	5.45		15.69				
		Physical Collocation 4-Wire Cross Connect, Exchange Port 4-Wire ISDN DS1			UEPEX	PE1R4	1.12	22.08	15.96	6.42	5.80		15.69				
PHYSICAL COLLOCATION																	
		Physical Collocation - Application Fee - Initial			CLO	PE1BA		1,883.67	1,883.67								
		Physical Collocation - Application Fee - Subsequent			CLO	PE1CA		1,570.10	1,570.10								
		Physical Collocation Administrative Only - Application Fee			CLO	PE1BL		743.66									
		Physical Collocation - Space Preparation - Firm Order Processing			CLO	PE1SJ		602.05	602.05								
		Physical Collocation - Space Preparation - C.O. Modification per square ft.			CLO	PE1SK	2.75										
		Physical Collocation - Space Preparation - Common Systems Modification per square ft. - Cageless			CLO	PE1SL	3.24										
		Physical Collocation - Space Preparation - Common Systems Modification per Cage			CLO	PE1SM	110.16										
		Physical Collocation - Cable Installation			CLO	PE1BD		794.22	794.22	22.54	22.54						
		Physical Collocation - Floor Space per Sq. Ft.			CLO	PE1PJ	3.95										
		Physical Collocation - Cable Support Structure, Per Entrance Cable			CLO	PE1PM	21.33										
		Physical Collocation - Power -48V DC Power, per Fused Amp			CLO	PE1PL	9.19										
		Physical Collocation - Power Reduction, Application Fee	I		CLO	PE1PR		400.33									
		Physical Collocation - 120V, Single Phase Standby Power Rate			CLO	PE1FB	5.67										
		Physical Collocation - 240V, Single Phase Standby Power Rate			CLO	PE1FD	11.36										
		Physical Collocation - 120V, Three Phase Standby Power Rate			CLO	PE1FE	17.03										
		Physical Collocation - 277V, Three Phase Standby Power Rate			CLO	PE1FG	39.33										
		Physical Collocation - 2-Wire Cross-Connects			UEANL,UEA,UDN,UDC,UAL,UHL,UCL,UEQ, UDL, UNCVX, UNLDX, UNCNX	PE1P2	0.0341	12.32	11.83	6.04	5.45						
		Physical Collocation - 4-Wire Cross-Connects			CLO, UAL, UDL, UDN, UEA, UHL, UNCVX, UNCDX, UCL	PE1P4	0.0682	12.42	11.90	6.40	5.74						
		Physical Collocation - DS1 Cross-Connects			CLO,UEANL,UEQ,WDS1L,WDS1S, USL, U1TD1, UXTD1, UNC1X, ULDD1, USLEL, UNLD1, UDL	PE1P1	1.12	22.08	15.96	6.42	5.80						

COLLOCATION - South Carolina														Attachment: 4		Exhibit: B	
CATEGORY		RATE ELEMENTS	Interim	Zone	BCS	USOC	RATES ($)					Svc Order Submitted Elec per LSR	Svc Order Submitted Manually per LSR	Incremental Charge - Manual Svc Order vs. Electronic-1st	Incremental Charge - Manual Svc Order vs. Electronic-Add'l	Incremental Charge - Manual Svc Order vs. Electronic-Disc 1st	Incremental Charge - Manual Svc Order vs. Electronic-Disc Add'l
							Rec	Nonrecurring		Nonrecurring Disconnect		OSS Rates ($)					
								First	Add'l	First	Add'l	SOMEC	SOMAN	SOMAN	SOMAN	SOMAN	SOMAN
		Physical Collocation - DS3 Cross-Connects			CLO, UE3,U1TD3, UXTD3, UXTS1, UNC3X, UNCSX, ULDD3, U1TS1,ULDS1, UNLD3, UDL	PE1P3	14.21	20.94	15.23	7.39	5.93						
		Physical Collocation - 2-Fiber Cross-Connect			CLO, ULDO3, ULD12, ULD48, U1TO3, U1T12, U1T48, UDLO3, UDL12, UDF	PE1F2	2.82	20.94	15.23	7.40	5.93						
		Physical Collocation - 4-Fiber Cross-Connect			CLO, ULDO3, ULD12, ULD48, U1TO3, U1T12, U1T48, UDLO3, UDL12, UDF	PE1F4	5.01	25.61	19.90	9.73	8.26						
		Physical Collocation - Welded Wire Cage - First 100 Sq. Ft.			CLO	PE1BW	219.19										
		Physical Collocation - Welded Wire Cage - Add'l 50 Sq. Ft.			CLO	PE1CW	21.50										
		Physical Collocation - Security Access System - Security System per Central Office			CLO	PE1AX	74.72										
		Physical Collocation - Security Access System - New Access Card Activation, per Card			CLO	PE1A1	0.0601	27.85	27.85								
		Physical Collocation-Security Access System-Administrative Change, existing Access Card, per Request, per State, per Card			CLO	PE1AA		7.81	7.81								
		Physical Collocation - Security Access System - Replace Lost or Stolen Card, per Card			CLO	PE1AR		22.83	22.83								
		Physical Collocation - Security Access - Initial Key, per Key			CLO	PE1AK		13.13	13.13								
		Physical Collocation - Security Access - Key, Replace Lost or Stolen Key, per Key			CLO	PE1AL		13.13	13.13								
		Physical Collocation - Space Availability Report per premises			CLO	PE1SR		1,077.57	1,077.57								
		POT Bay Arrangements prior to 6/1/99 - 2-Wire Cross-Connect, per cross-connect			UEANL,UEA,UDN,UDC,UAL,UHL,UCL,UEQ,CLO,UDL, UNCVX, UNCDX, UNCNX	PE1PE	0.085										
		POT Bay Arrangements prior to 6/1/99 - 4-Wire Cross-Connect, per cross-connect			UEANL,UEA,UDN,UDC,UAL,UHL,UCL,UEQ,CLO, USL, UNCVX, UNCDX	PE1PF	0.1701										
		POT Bay Arrangements prior to 6/1/99 - DS1 Cross-Connect, per cross-connect			UEANL,UEA,UDN,UDC,UAL,UHL,UCL,UEQ,CLO,WDS1L,WDS1S, USL, U1TD1, UXTD1, UNC1X, ULDD1, USLEL, UNLD1	PE1PG	1.20										
		POT Bay Arrangements prior to 6/1/99 - DS3 Cross-Connect, per cross-connect			UEANL,UEA,UDN,UDC,UAL,UHL,UCL,UEQ,CLO,UE3, U1TD3, UXTD3, UXTS1, UNC3X, UNCSX, ULDD3, U1TS1, ULDS1, UNLD3, UDL, UDLSX	PE1PH	10.71										

COLLOCATION - South Carolina														Attachment: 4		Exhibit: B	
CATEGORY		RATE ELEMENTS	Interim	Zone	BCS	USOC	RATES ($)					Svc Order Submitted Elec per LSR	Svc Order Submitted Manually per LSR	Incremental Charge - Manual Svc Order vs. Electronic-1st	Incremental Charge - Manual Svc Order vs. Electronic-Add'l	Incremental Charge - Manual Svc Order vs. Electronic-Disc 1st	Incremental Charge - Manual Svc Order vs. Electronic-Disc Add'l
							Rec	Nonrecurring		Nonrecurring Disconnect		OSS Rates ($)					
								First	Add'l	First	Add'l	SOMEC	SOMAN	SOMAN	SOMAN	SOMAN	SOMAN
		POT Bay Arrangements prior to 6/1/99 - 2-Fiber Cross-Connect, per cross-connect			UEANL,UEA,UDN,UDC,UAL,UHL,UCL,UEQ,CLO, ULDO3, ULD12, ULD48, U1TO3, U1T12, U1T48, UDLO3, UDL12, UDF	PE1B2	36.55										
		POT Bay Arrangements prior to 6/1/99 - 4-Fiber Cross-Connect, per cross-connect			UEANL,UEA,UDN,UDC,UAL,UHL,UCL,UEQ,CLO, ULDO3, ULD12, ULD48, U1TO3, U1T12, U1T48, UDLO3, UDL12, UDF	PE1B4	49.29										
		Physical Collocation - Request Resend of CFA Information, per CLLI			CLO	PE1C9		77.71									
		Nonrecurring Collocation Cable Records - per request			CLO	PE1CR		760.98	489.20	133.29	133.29						
		Nonrecurring Collocation Cable Records - VG/DS0 Cable, per cable record			CLO	PE1CD		327.65	327.65	189.54	189.54						
		Nonrecurring Collocation Cable Records - VG/DS0 Cable, per each 100 pair			CLO	PE1CO		4.82	4.82	5.91	5.91						
		Nonrecurring Collocation Cable Records - DS1, per T1TIE			CLO	PE1C1		2.26	2.26	2.77	2.77						
		Nonrecurring Collocation Cable Records - DS3, per T3TIE			CLO	PE1C3		7.90	7.90	9.68	9.68						
		Nonrecurring Collocation Cable Records - Fiber Cable, per 99 fiber records			CLO	PE1CB		84.68	84.68	77.30	77.30						
		Physical Collocation - Security Escort - Basic, per Half Hour			CLO,CLORS	PE1BT		16.96	10.75								
		Physical Collocation - Security Escort - Overtime, per Half Hour			CLO,CLORS	PE1OT		22.10	13.89								
		Physical Collocation - Security Escort - Premium, per Half Hour			CLO,CLORS	PE1PT		27.23	17.02								
		V to P Conversion, Per Customer Request-Voice Grade			CLO	PE1BV		33.00									
		V to P Conversion, Per Customer Request-DS0			CLO	PE1BO		33.00									
		V to P Conversion, Per Customer Request-DS1			CLO	PE1B1		52.00									
		V to P Conversion, Per Customer request-DS3			CLO	PE1B3		52.00									
		V to P Conversion, Per Customer Request per VG Circuit Reconfigured			CLO	PE1BR		23.00									
		V to P Conversion, Per Customer Request per DS0 Circuit Reconfigured			CLO	PE1BP		23.00									
		V to P Conversion, Per Customer Request per DS1 Circuit Reconfigured			CLO	PE1BS		33.00									
		V to P Conversion, Per Customer Request per DS3 Circuit Reconfigured			CLO	PE1BE		37.00									
		V to P Conversion, Cable Pairs Assigned to Collo Space per 700 prs or fraction thereof			CLO	PE1B7		592.00									
		Physical Collocation - Co-Carrier Cross Connects - Fiber Cable Support Structure, per cable, per linear ft.			CLO,UDF	PE1ES	0.001										
		Physical Collocation - Co-Carrier Cross Connects - Copper/Coax Cable Support Structure, per cable, per lin. ft.			CLO, UE3, USL	PE1DS	0.0015										
		Physical Collocation - Co-Carrier Cross Connects Only - Application Fee, per application			CLO	PE1DT		584.42									
		Physical Collocation - Application to Augment Exsisting Space - Simple			CLO	PE1KS		594.27		1.21							
		Physical Collocation - Application to Augment Exsisting Space - Minor			CLO	PE1KM		833.26		1.21							
		Physical Collocation - Application to Augment Exsisting Space - Intermediate			CLO	PE1K1		1,058.00		1.21							
ADJACENT COLLOCATION																	
		Adjacent Collocation - Space Charge per Sq. Ft.			CLOAC	PE1JA	0.0939										
		Adjacent Collocation - Electrical Facility Charge per Linear Ft.			CLOAC	PE1JC	6.40										

COLLOCATION - South Carolina														Attachment: 4		Exhibit: B	
CATEGORY		RATE ELEMENTS	Interim	Zone	BCS	USOC	RATES ($)					Svc Order Submitted Elec per LSR	Svc Order Submitted Manually per LSR	Incremental Charge - Manual Svc Order vs. Electronic-1st	Incremental Charge - Manual Svc Order vs. Electronic-Add'l	Incremental Charge - Manual Svc Order vs. Electronic-Disc 1st	Incremental Charge - Manual Svc Order vs. Electronic-Disc Add'l
							Rec	Nonrecurring		Nonrecurring Disconnect		OSS Rates ($)					
								First	Add'l	First	Add'l	SOMEC	SOMAN	SOMAN	SOMAN	SOMAN	SOMAN
		Adjacent Collocation - 2-Wire Cross-Connects			CLOAC	PE1P2	0.0264	12.32	11.83	6.04	5.45						
		Adjacent Collocation - 4-Wire Cross-Connects			UEA,UHL,UDL,UCL, CLOAC	PE1P4	0.0527	12.42	11.90	6.40	5.74						
		Adjacent Collocation - DS1 Cross-Connects			USL,CLOAC	PE1P1	1.03	22.08	15.96	6.42	5.80						
		Adjacent Collocation - DS3 Cross-Connects			CLOAC	PE1P3	14.00	20.94	15.23	7.39	5.93						
		Adjacent Collocation - 2-Fiber Cross-Connect			CLOAC	PE1F2	2.37	20.94	15.23	7.40	5.93						
		Adjacent Collocation - 4-Fiber Cross-Connect			CLOAC	PE1F4	4.53	25.61	19.90	9.73	8.26						
		Adjacent Collocation - Application Fee			CLOAC	PE1JB		1,580.20									
		Adjacent Collocation - 120V, Single Phase Standby Power Rate per AC Breaker Amp			CLOAC	PE1FB	5.67										
		Adjacent Collocation - 240V, Single Phase Standby Power Rate per AC Breaker Amp			CLOAC	PE1FD	11.36										
		Adjacent Collocation - 120V, Three Phase Standby Power Rate per AC Breaker Amp			CLOAC	PE1FE	17.03										
		Adjacent Collocation - 277V, Three Phase Standby Power Rate per AC Breaker Amp			CLOAC	PE1FG	39.33										
PHYSICAL COLLOCATION IN THE REMOTE SITE																	
		Physical Collocation in the Remote Site - Application Fee			CLORS	PE1RA		308.38	308.38	168.60	168.60						
		Cabinet Space in the Remote Site per Bay/ Rack			CLORS	PE1RB	246.44										
		Physical Collocation in the Remote Site - Security Access - Key			CLORS	PE1RD		13.13	13.13								
		Physical Collocation in the Remote Site - Space Availability Report per Premises Requested			CLORS	PE1SR		116.13	116.13								
		Physical Collocation in the Remote Site - Remote Site CLLI Code Request, per CLLI Code Requested			CLORS	PE1RE		37.64	37.64								
		Remote Site DLEC Data (BRSDD), per Compact Disk, per CO			CLORS	PE1RR		234.50									
PHYSICAL COLLOCATION IN THE REMOTE SITE - ADJACENT																	
		Remote Site-Adjacent Collocation - AC Power, per breaker amp			CLORS	PE1RS	6.27										
		Remote Site-Adjacent Collocation - Real Estate, per square foot			CLORS	PE1RT	0.134										
		Remote Site-Adjacent Collocation-Application Fee			CLORS	PE1RU		755.62	755.62								
	NOTE: If Security Escort and/or Add'l Engineering Fees become necessary for remote site collocation, the Parties will negotiate appropriate rates.																
VIRTUAL COLLOCATION																	
		Virtual Collocation - Application Fee			AMTFS	EAF		1,207.95	1,207.95	0.51	0.51		15.69				
		Virtual Collocation - Cable Installation Cost, per cable			AMTFS	ESPCX		794.22	794.22	22.54	22.54		15.69				
		Virtual Collocation - Floor Space, per sq. ft.			AMTFS	ESPVX	3.95										
		Virtual Collocation - Power, per fused amp			AMTFS	ESPAX	9.19										
		Virtual Collocation - Cable Support Structure, per entrance cable			AMTFS	ESPSX	18.66										
		Virtual Collocation - 2-wire Cross Connects (loop)			UEANL,UEA,UDN,UDC,UAL,UHL,UCL,UEQ, AMTFS, UDL, UNCVX, UNCDX, UNCNX	UEAC2	0.0317	12.32	11.83	6.04	5.45		15.69				
		Virtual Collocation - 4-wire Cross Connects (loop)			UEA,UHL,UCL,UDL, AMTFS, UAL, UDN, UNCVX, UNCDX	UEAC4	0.0634	12.42	11.90	6.40	5.74		15.69				
		Virtual Collocation - 2-Fiber Cross Connects			AMTFS,UDL12, UDLO3, U1T48, U1T12, U1T03, ULDO3, ULD12, ULD48, UDF	CNC2F	2.86	20.94	15.23	7.40	5.93		15.69				
		Virtual Collocation - 4-Fiber Cross Connects			AMTFS,UDL12, UDLO3, U1T48, U1T12, U1T03, ULDO3, ULD12, ULD48, UDF	CNC4F	5.71	25.61	19.90	9.73	8.26		15.69				

COLLOCATION - South Carolina														Attachment: 4		Exhibit: B	
CATEGORY		RATE ELEMENTS	Interim	Zone	BCS	USOC	RATES ($)					Svc Order Submitted Elec per LSR	Svc Order Submitted Manually per LSR	Incremental Charge - Manual Svc Order vs. Electronic-1st	Incremental Charge - Manual Svc Order vs. Electronic-Add'l	Incremental Charge - Manual Svc Order vs. Electronic-Disc 1st	Incremental Charge - Manual Svc Order vs. Electronic-Disc Add'l
							Rec	Nonrecurring		Nonrecurring Disconnect		OSS Rates ($)					
								First	Add'l	First	Add'l	SOMEC	SOMAN	SOMAN	SOMAN	SOMAN	SOMAN
		Virtual collocation - Special Access & UNE,cross-connect per DS1			USL,ULC,AMTFS, ULR, UXTD1, UNC1X, ULDD1, U1TD1, USLEL, UNLD1	CNC1X	1.12	22.08	15.96	6.42	5.80		15.69				
		Virtual collocation - Special Access & UNE, cross-connect per DS3			USL,ULC,AMTFS,UE3, U1TD3, UXTS1, UXTD3, UNC3X, UNCSX, ULDD3, U1TS1, ULDS1, UDLSX, UNLD3	CND3X	14.21	20.94	15.23	7.39	5.93		15.69				
		Virtual Collocation - Co-Carrier Cross Connects - Fiber Cable Support Structure, per linear foot			AMTFS	VE1CB	0.0022										
		Virtual Collocation - Co-Carrier Cross Connects - Copper/Coax Cable Support Structure, per linear ft			AMTFS	VE1CD	0.0033										
		Virtual Collocation - Co-Carrier Cross Connects - Fiber Cable Support Structure,per cable			AMTFS	VE1CC		536.56									
		Virtual Collocation - Co-Carrier Cross Connects - Copper/Coax Cable Support Structure, per cable			AMTFS	VE1CE		536.56									
		Virtual Collocation Cable Records - per request			AMTFS	VE1BA		760.98	489.20	133.29	133.29						
		Virtual Collocation Cable Records - VG/DS0 Cable, per cable record			AMTFS	VE1BB		327.65	327.65	189.54	189.54						
		Virtual Collocation Cable Records - VG/DS0 Cable, per each 100 pair			AMTFS	VE1BC		4.82	4.82	5.91	5.91						
		Virtual Collocation Cable Records - DS1, per T1TIE			AMTFS	VE1BD		2.26	2.26	2.77	2.77						
		Virtual Collocation Cable Records - DS3, per T3TIE			AMTFS	VE1BE		7.90	7.90	9.68	9.68						
		Virtual Collocation Cable Records - Fiber Cable, per 99 fiber records			AMTFS	VE1BF		84.68	84.68	77.30	77.30						
		Virtual collocation - Security Escort - Basic, per half hour			AMTFS	SPTBX		16.96	10.75				15.69				
		Virtual collocation - Security Escort - Overtime, per half hour			AMTFS	SPTOX		22.10	13.89				15.69				
		Virtual collocation - Security Escort - Premium, per half hour			AMTFS	SPTPX		27.23	17.02				15.69				
		Virtual collocation - Maintenance in CO - Basic, per half hour			AMTFS	CTRLX		27.99	10.75				15.69				
		Virtual collocation - Maintenance in CO - Overtime, per half hour			AMTFS	SPTOM		36.56	13.89				15.69				
		Virtual collocation - Maintenance in CO - Premium per half hour			AMTFS	SPTPM		45.12	17.02				15.69				
VIRTUAL COLLOCATION																	
		Virtual Collocation - 2-wire Cross Connect, Exchange Port 2-Wire Analog - Res			UEPSR	VE1R2	0.0317	12.32	11.83	6.04	5.45		15.69				
		Virtual Collocation 2-Wire Cross Connect, Exchange Port 2-Wire Line Side PBX Trunk - Bus			UEPSP	VE1R2	0.0317	12.32	11.83	6.04	5.45		15.69				
		Virtual Collocation 2-Wire Cross Connect, Exchange Port 2-Wire Voice Grade PBX Trunk - Res			UEPSE	VE1R2	0.0317	12.32	11.83	6.04	5.45		15.69				
		Virtual Collocation 2-Wire Cross Connect, Exchange Port 2-Wire Analog Bus			UEPSB	VE1R2	0.0317	12.32	11.83	6.04	5.45		15.69				
		Virtual Collocation 2-Wire Cross Connect, Exchnage Port 2-Wire ISDN			UEPSX	VE1R2	0.0317	12.32	11.83	6.04	5.45		15.69				
		Virtual Collocation 2-Wire Cross Connect, Exchange Port 2-Wire ISDN			UEPTX	VE1R2	0.0317	12.32	11.83	6.04	5.45		15.69				
		Virtual Collocation 4-Wire Cross Connect, Exchange Port 4-Wire ISDN DS1			UEPEX	VE1R4	1.12	22.08	15.96	6.42	5.80		15.69				
	Note: Rates displaying an "R" in Interim column are interim and subject to rate true-up as set forth in General Terms and Conditions.																

COLLOCATION - Tennessee

CATEGORY	RATE ELEMENTS	Interim	Zone	BCS	USOC	RATES ($) Rec	Nonrecurring First	Nonrecurring Add'l	Nonrecurring Disconnect First	Nonrecurring Disconnect Add'l	Svc Order Submitted Elec per LSR	Svc Order Submitted Manually per LSR	Attachment: 4 Incremental Charge - Manual Svc Order vs. Electronic-1st	Attachment: 4 Incremental Charge - Manual Svc Order vs. Electronic-Add'l	Exhibit: B Incremental Charge - Manual Svc Order vs. Electronic-Disc 1st	Exhibit: B Incremental Charge - Manual Svc Order vs. Electronic-Disc Add'l
											OSS Rates ($)					
											SOMEC	SOMAN	SOMAN	SOMAN	SOMAN	SOMAN
PHYSICAL COLLOCATION																
	Physical Collocation 2-Wire Cross Connect, Exchange Port 2-Wire Analog - Res			UEPSR	PE1R2	0.30	19.20	19.20					20.35	10.54	13.32	1.40
	Physical Collocation 2-Wire Cross Connect, Exchange Port 2-Wire Line Side PBX Trunk - Bus			UEPSP	PE1R2	0.30	19.20	19.20					20.35	10.54	13.32	1.40
	Physical Collocation 2-Wire Cross Connect, Exchange Port 2-Wire Voice Grade PBX Trunk - Res			UEPSE	PE1R2	0.30	19.20	19.20					20.35	10.54	13.32	1.40
	Physical Collocation 2-Wire Cross Connect, Exchange Port 2-Wire Analog - Bus			UEPSB	PE1R2	0.30	19.20	19.20					20.35	10.54	13.32	1.40
	Physical Collocation 2-Wire Cross Connect, Exchange Port 2-Wire ISDN			UEPSX	PE1R2	0.30	19.20	19.20					20.35	10.54	13.32	1.40
	Physical Collocation 2-Wire Cross Connect, Exchange Port 2-Wire ISDN			UEPTX	PE1R2	0.30	19.20	19.20					20.35	10.54	13.32	1.40
	Physical Collocation 4-Wire Cross Connect, Exchange Port 4-Wire ISDN DS1			UEPEX	PE1R4	0.50	19.20	19.20					20.35	10.54	13.32	1.40
PHYSICAL COLLOCATION																
	Physical Collocation - Cageless - Application Fee			CLO	PE1CH		2,633.00	2,633.00								
	Physical Collocation Administrative Only - Application Fee	I		CLO	PE1BL		743.25									
	Physical Collocation - Space Preparation - C.O. Modification per square ft.	I		CLO	PE1SK	2.74										
	Physical Collocation - Space Preparation - Common Systems Modification per square ft. - Cageless	I		CLO	PE1SL	2.95										
	Physical Collocation - Space Preparation - Common Systems Modification per Cage	I		CLO	PE1SM	100.14										
	Physical Collocation - Cageless - Cable Installation Cost, per cable			CLO	PE1ZA		1,749.00	1,749.00								
	Physical Collocation - Cageless - Floor Space, per sq. ft.			CLO	PE1ZB	3.91										
	Physical Collocation - Floor Space per Sq. Ft.	I		CLO	PE1PJ	5.94										
	Physical Collocation - Cageless - Cable Support Structure			CLO	PE1CJ	17.87										
	Physical Collocation - Cable Support Structure, Per Entrance Cable	I		CLO	PE1PM	19.80										
	Physical Collocation - Cageless - Floor Space Power, per Fused Amp			CLO	PE1ZC	6.79										
	Physical Collocation - Power -48V DC Power, per Fused Amp	I		CLO	PE1PL	8.87										
	Physical Collocation - Power Reduction, Application Fee	I		CLO	PE1PR		400.10									
	Physical Collocation - 120V, Single Phase Standby Power Rate	I		CLO	PE1FB	5.60										
	Physical Collocation - 240V, Single Phase Standby Power Rate	I		CLO	PE1FD	11.22										
	Physical Collocation - 120V, Three Phase Standby Power Rate	I		CLO	PE1FE	16.82										
	Physical Collocation - 277V, Three Phase Standby Power Rate	I		CLO	PE1FG	38.84										
	Physical Collocation - 2-Wire Cross-Connects	I		UEANL,UEA,UDN,UDC,UAL,UHL,UCL,UEQ, UDL, UNCVX, UNLDX, UNCNX	PE1P2	0.033	33.82	31.92								
	Physical Collocation - 4-Wire Cross-Connects	I		CLO, UAL, UDL, UDN, UEA, UHL, UNCVX, UNCDX, UCL	PE1P4	0.066	33.94	31.95								
	Physical Collocation - DS1 Cross-Connects	I		CLO,UEANL,UEQ,WDS1L,WDS1S, USL, U1TD1, UXTD1, UNC1X, ULDD1, USLEL, UNLD1, UDL	PE1P1	1.51	53.27	40.16								

COLLOCATION - Tennessee

CATEGORY		RATE ELEMENTS	Interim	Zone	BCS	USOC	RATES ($)					Svc Order Submitted Elec per LSR	Svc Order Submitted Manually per LSR	Attachment: 4		Exhibit: B	
														Incremental Charge - Manual Svc Order vs. Electronic-1st	Incremental Charge - Manual Svc Order vs. Electronic-Add'l	Incremental Charge - Manual Svc Order vs. Electronic-Disc 1st	Incremental Charge - Manual Svc Order vs. Electronic-Disc Add'l
							Rec	Nonrecurring		Nonrecurring Disconnect		OSS Rates ($)					
								First	Add'l	First	Add'l	SOMEC	SOMAN	SOMAN	SOMAN	SOMAN	SOMAN
		Physical Collocation - DS3 Cross-Connects	I		CLO, UE3,U1TD3, UXTD3, UXTS1, UNC3X, UNCSX, ULDD3, U1TS1,ULDS1, UNLD3, UDL	PE1P3	19.26	52.37	38.89								
		Physical Collocation - 2-Fiber Cross-Connect	I		CLO, ULDO3, ULD12, ULD48, U1TO3, U1T12, U1T48, UDLO3, UDL12, UDF	PE1F2	15.64	41.56	29.82	12.96	10.34			2.69	2.69	1.56	1.56
		Physical Collocation - Cageless - 2-Fiber Cross-Connect			CLO, ULDO3, ULD12, ULD48, U1TO3, U1T12, U1T48, UDLO3, UDL12, UDF	PE1CK	3.03	41.56	29.82	12.96	10.34						
		Physical Collocation - 4-Fiber Cross-Connect	I		CLO, ULDO3, ULD12, ULD48, U1TO3, U1T12, U1T48, UDLO3, UDL12, UDF	PE1F4	28.11	50.53	38.78	16.97	14.35			2.69	2.69	1.56	1.56
		Physical Collocation - Cageless - 4-Fiber Cross-Connect			CLO, ULDO3, ULD12, ULD48, U1TO3, U1T12, U1T48, UDLO3, UDL12, UDF	PE1CL	6.06	50.53	38.78	16.97	14.35						
		Physical Collocation - Welded Wire Cage - First 100 Sq. Ft.	I		CLO	PE1BW	218.53										
		Physical Collocation - Welded Wire Cage - Add'l 50 Sq. Ft.	I		CLO	PE1CW	21.44										
		Physical Collocation - Security Access System - Security System per Central Office	I		CLO	PE1AX	55.99										
		Physical Collocation - Security Access System - New Access Card Activation, per Card	I		CLO	PE1A1	0.059	55.67	55.67								
		Physical Collocation - Space Availability Report per premises			CLO	PE1SR		2,027.00	2,154.00								
		POT Bay Arrangements prior to 6/1/99 - 2-Wire Cross-Connect, per cross-connect	I		UEANL,UEA,UDN,UDC,UAL,UHL,UCL,UEQ,CLO,UDL, UNCVX, UNCDX, UNCNX	PE1PE	0.40										
		POT Bay Arrangements prior to 6/1/99 - 4-Wire Cross-Connect, per cross-connect	I		UEANL,UEA,UDN,UDC,UAL,UHL,UCL,UEQ,CLO, USL, UNCVX, UNCDX	PE1PF	1.20										
		POT Bay Arrangements prior to 6/1/99 - DS1 Cross-Connect, per cross-connect	I		UEANL,UEA,UDN,UDC,UAL,UHL,UCL,UEQ,CLO,WDS1L,WDS1S, USL, U1TD1, UXTD1, UNC1X, ULDD1, USLEL, UNLD1	PE1PG	1.20										
		POT Bay Arrangements prior to 6/1/99 - DS3 Cross-Connect, per cross-connect	I		UEANL,UEA,UDN,UDC,UAL,UHL,UCL,UEQ,CLO,UE3, U1TD3, UXTD3, UXTS1, UNC3X, UNCSX, ULDD3, U1TS1, ULDS1, UNLD3, UDL, UDLSX	PE1PH	8.00										

COLLOCATION - Tennessee														Attachment: 4		Exhibit: B	
CATEGORY		RATE ELEMENTS	Interim	Zone	BCS	USOC	RATES ($)					Svc Order Submitted Elec per LSR	Svc Order Submitted Manually per LSR	Incremental Charge - Manual Svc Order vs. Electronic-1st	Incremental Charge - Manual Svc Order vs. Electronic-Add'l	Incremental Charge - Manual Svc Order vs. Electronic-Disc 1st	Incremental Charge - Manual Svc Order vs. Electronic-Disc Add'l
							Rec	Nonrecurring		Nonrecurring Disconnect		OSS Rates ($)					
								First	Add'l	First	Add'l	SOMEC	SOMAN	SOMAN	SOMAN	SOMAN	SOMAN
		POT Bay Arrangements prior to 6/1/99 - 2-Fiber Cross-Connect, Per Cross-Connect			UEANL,UEA,UDN,UDC,UAL,UHL,UCL,UEQ,CLO, ULDO3, ULD12, ULD48, U1TO3, U1T12, U1T48, UDLO3, UDL12, UDF	PE1B2	38.79										
		POT Bay Arrangements prior to 6/1/99 - 4-Fiber Cross-Connect, per cross-connect			UEANL,UEA,UDN,UDC,UAL,UHL,UCL,UEQ,CLO, ULDO3, ULD12, ULD48, U1TO3, U1T12, U1T48, UDLO3, UDL12, UDF	PE1B4	52.31										
		Physical Collocation - Request Resend of CFA Information, per CLLI	I		CLO	PE1C9		77.67									
		Nonrecurring Collocation Cable Records - per request	I		CLO	PE1CR		1,711.00									
		Nonrecurring Collocation Cable Records - VG/DS0 Cable, per cable record	I		CLO	PE1CD		925.06									
		Nonrecurring Collocation Cable Records - VG/DS0 Cable, per each 100 pair	I		CLO	PE1CO		18.05	18.05								
		Nonrecurring Collocation Cable Records - DS1, per T1TIE	I		CLO	PE1C1		8.45	8.45								
		Nonrecurring Collocation Cable Records - DS3, per T3TIE	I		CLO	PE1C3		29.57	29.57								
		Nonrecurring Collocation Cable Records - Fiber Cable, per 99 fiber records	I		CLO	PE1CB		279.42	279.42								
		Physcial Collocation - Cageless - Security Escort - Basic, per Half Hour			CLO	PE1ZM		33.15	20.44								
		Physical Collocation - Cageless - Security Escort - Overtime, per Half Hour			CLO	PE1ZN		41.50	25.61								
		Physical Collocation - Cageless - Security Escort - Premium, per Half Hour			CLO	PE1ZO		49.86	30.79								
		V to P Conversion, Per Customer Request-Voice Grade	I		CLO	PE1BV		33.00									
		V to P Conversion, Per Customer Request-DS0	I		CLO	PE1BO		33.00									
		V to P Conversion, Per Customer Request-DS1	I		CLO	PE1B1		52.00									
		V to P Conversion, Per Customer request-DS3	I		CLO	PE1B3		52.00									
		V to P Conversion, Per Customer Request per VG Circuit Reconfigured	I		CLO	PE1BR		23.00									
		V to P Conversion, Per Customer Request per DS0 Circuit Reconfigured	I		CLO	PE1BP		23.00									
		V to P Conversion, Per Customer Request per DS1 Circuit Reconfigured	I		CLO	PE1BS		33.00									
		V to P Conversion, Per Customer Request per DS3 Circuit Reconfigured	I		CLO	PE1BE		37.00									
		V to P Conversion, Cable Pairs Assigned to Collo Space per 700 prs or fraction thereof	I		CLO	PE1B7		592.00									
		Physical Caged Collocation-App Cost(initial & sub)-Planning, per request			CLO	PE1AC	16.16	2,903.66	2,903.66								
		Physical Caged Collocation-Space Prep-Grounding, per location			CLO	PE1BB	4.32										
		Physical Caged Collocation-Space Prep-Power Delivery, per 40 amp Feed			CLO	PE1SN		142.40									
		Physical Caged Collocation-Space Prep-Power Delivery, per 100 amp Feed			CLO	PE1SO		185.72									
		Physical Caged Collocation-Space Prep-Power Delivery, per 200 amp Feed			CLO	PE1SP		242.05									
		Physical Caged Collocation-Space Enclosure-Cage Preparation, per first 100 sq. ft.			CLO	PE1S1	110.97										
		Phycical Caged Collocation-Space Enclosure-Cage Preparation2, per add'l 50 sq. ft.			CLO	PE1S5	55.49										

COLLOCATION - Tennessee														Attachment: 4		Exhibit: B	
CATEGORY		RATE ELEMENTS	Interim	Zone	BCS	USOC	RATES ($)					Svc Order Submitted Elec per LSR	Svc Order Submitted Manually per LSR	Incremental Charge - Manual Svc Order vs. Electronic-1st	Incremental Charge - Manual Svc Order vs. Electronic-Add'l	Incremental Charge - Manual Svc Order vs. Electronic-Disc 1st	Incremental Charge - Manual Svc Order vs. Electronic-Disc Add'l
							Rec	Nonrecurring		Nonrecurring Disconnect		OSS Rates ($)					
								First	Add'l	First	Add'l	SOMEC	SOMAN	SOMAN	SOMAN	SOMAN	SOMAN
		Physical Caged collocation-Cable Installation-Entrance Fiber Structure, interduct per ft.			CLO	PE1CP	0.0156										
		Phycical Caged Collocation-Cable Installation-Entrance Fiber, per cable			CLO	PE1CQ	2.56	944.27									
		Physical Caged Collocation-Floor Space-Land & Buildings, per sq. ft.			CLO	PE1FS	5.94										
		Physical Caged Collocation-Cable Support Structure-Cable Racking, per entrance cable			CLO	PE1CS	21.47										
		Physical Caged Collocation-Power-Power Construction, per amp DC plant			CLO	PE1PN	3.55										
		Physical Caged Collocation-Power-Power Consumption,per amp AC usage			CLO	PE1PO	2.03										
		Physical Caged Collocation-2-wire Cross Connects-Voice Grade ckts, per ckt.			CLO	PE12C	0.0475	7.68									
		Physical Caged Collocation-4-wire Cross Connects-Voice Grade Ckts, per ckt.			CLO	PE14C	0.0475	7.68									
		Physical Caged Collocation-DS1 Cross Connects-connection to DCS, per ckt.			CLO	PE11S	7.68	41.65									
		Physical Caged Collocation-DS1 Cross Connects-Connection to DSX, per ckt.			CLO	PE11X	0.38	41.65									
		Physical Caged Collocation-DS3 Cross Connects-Connection to DCS, per ckt.			CLO	PE13S	53.96	298.03									
		Physical Caged Collocation-DS3 Cross Connects-Connection to DSX, per ckt.			CLO	PE13X	9.32	298.03									
		Physical Caged Collocation-Security Access-Access Cards, per 5 Cards			CLO	PE1A2		76.10									
		Physical Collocation - Co-Carrier Cross Connects - Fiber Cable Support Structure, per cable, per linear ft.			CLO,UDF	PE1ES	0.0013										
		Physical Collocation - Cageless - Co-Carrier Cross Connects - Fiber Cable Support Structure, per linear ft.			CLO	PE1ZH	0.0031										
		Physical Collocation - Cageless - Co-Carrier Cross Connects- Fiber Cable Support Structure, per cable			CLO	PE1ZK		555.03									
		Physical Collocation - Co-Carrier Cross Connects - Copper/Coax Cable Support Structure, per cable, per lin. ft.			CLO	PE1DS	0.0019										
		Physical Collocation - Cageless - Co-Carrier Cross Connects - Copper/Coax Cable Support Structure, per linear ft.			CLO	PE1ZJ	0.0045										
		Physical Collocation - Cageless - Co-Carrier Cross Connects - Copper/Coax Cable Support Structure, per cable			CLO	PE1ZL		555.03									
		Physical Collocation - Co-Carrier Cross Connects Only - Application Fee, per application			CLO	PE1DT		585.09									
ADJACENT COLLOCATION																	
		Adjacent Collocation - Space Charge per Sq. Ft.			CLOAC	PE1JA	0.0656										
		Adjacent Collocation - Electrical Facility Charge per Linear Ft.			CLOAC	PE1JC	5.53										
		Adjacent Collocation - 2-Wire Cross-Connects			CLOAC	PE1P2	0.34	11.12	10.18	11.33	10.23			1.77	1.77	1.12	1.12
		Adjacent Collocation - 4-Wire Cross-Connects			UEA,UHL,UDL,UCL, CLOAC	PE1P4	0.33	11.30	10.31	11.62	10.44			1.77	1.77	1.12	1.12
		Adjacent Collocation - DS1 Cross-Connects			USL,CLOAC	PE1P1	1.70	28.39	16.88	11.65	10.54			1.77	1.77	1.12	1.12
		Adjacent Collocation - DS3 Cross-Connects			CLOAC	PE1P3	19.03	26.23	15.51	13.40	10.77			1.77	1.77	1.12	1.12
		Adjacent Collocation - 2-Fiber Cross-Connect			CLOAC	PE1F2	3.49	26.23	15.51	13.41	10.78			1.77	1.77	1.12	1.12
		Adjacent Collocation - 4-Fiber Cross-Connect			CLOAC	PE1F4	6.50	29.75	19.02	17.60	14.97			1.77	1.77	1.12	1.12
		Adjacent Collocation - Application Fee			CLOAC	PE1JB		2,973.00									
		Adjacent Collocation - 120V, Single Phase Standby Power Rate per AC Breaker Amp			CLOAC	PE1FB	5.81										
		Adjacent Collocation - 240V, Single Phase Standby Power Rate per AC Breaker Amp			CLOAC	PE1FD	11.64										
		Adjacent Collocation - 120V, Three Phase Standby Power Rate per AC Breaker Amp			CLOAC	PE1FE	17.45										
		Adjacent Collocation - 277V, Three Phase Standby Power Rate per AC Breaker Amp			CLOAC	PE1FG	40.30										

COLLOCATION - Tennessee														Attachment: 4		Exhibit: B	
CATEGORY		RATE ELEMENTS	Interim	Zone	BCS	USOC	RATES ($)					Svc Order Submitted Elec per LSR	Svc Order Submitted Manually per LSR	Incremental Charge - Manual Svc Order vs. Electronic-1st	Incremental Charge - Manual Svc Order vs. Electronic-Add'l	Incremental Charge - Manual Svc Order vs. Electronic-Disc 1st	Incremental Charge - Manual Svc Order vs. Electronic-Disc Add'l
							Rec	Nonrecurring		Nonrecurring Disconnect		OSS Rates ($)					
								First	Add'l	First	Add'l	SOMEC	SOMAN	SOMAN	SOMAN	SOMAN	SOMAN
PHYSICAL COLLOCATION IN THE REMOTE SITE																	
		Physical Collocation in the Remote Site - Application Fee			CLORS	PE1RA		580.20		312.76							
		Cabinet Space in the Remote Site per Bay/ Rack			CLORS	PE1RB	220.41										
		Physical Collocation in the Remote Site - Security Access - Key			CLORS	PE1RD		24.69									
		Physical Collocation in the Remote Site - Space Availability Report per Premises Requested			CLORS	PE1SR		218.49									
		Physical Collocation in the Remote Site - Remote Site CLLI Code Request, per CLLI Code Requested			CLORS	PE1RE		70.81									
		Remote Site DLEC Data (BRSDD), per Compact Disk, per CO			CLORS	PE1RR		234.15									
PHYSICAL COLLOCATION IN THE REMOTE SITE - ADJACENT																	
		Remote Site-Adjacent Collocation - AC Power, per breaker amp			CLORS	PE1RS	6.27										
		Remote Site-Adjacent Collocation - Real Estate, per square foot			CLORS	PE1RT	0.134										
		Remote Site-Adjacent Collocation-Application Fee			CLORS	PE1RU		755.62	755.62								
	NOTE: If Security Escort and/or Add'l Engineering Fees become necessary for remote site collocation, the Parties will negotiate appropriate rates.																
VIRTUAL COLLOCATION																	
		Virtual Collocation - Application Fee			AMTFS	EAF		2,633.00	2,633.00					2.07	2.81	0.67	1.41
		Virtual Collocation - Cable Installation Cost, per cable			AMTFS	ESPCX		1,749.00	1,749.00					2.07	2.81	0.67	1.41
		Virtual Collocation - Floor Space, per sq. ft.			AMTFS	ESPVX	3.91										
		Virtual Collocation - Power, per fused amp			AMTFS	ESPAX	6.79										
		Virtual Collocation - Cable Support Structure, per entrance cable			AMTFS	ESPSX	17.87										
		Virtual Collocation - 2-wire Cross Connects (loop)			UEANL,UEA,UDN,UDC,UAL,UHL,UCL,UEQ, AMTFS, UDL, UNCVX, UNCDX, UNCNX	UEAC2	0.57	11.62	9.90	10.38	8.66			2.07	2.81	0.67	1.41
		Virtual Collocation - 4-wire Cross Connects (loop)			UEA,UHL,UCL,UDL, AMTFS, UAL, UDN, UNCVX, UNCDX	UEAC4	0.57	11.81	10.04	10.44	8.67			2.07	2.81	0.67	1.41
		Virtual Collocation - 2-Fiber Cross Connects			AMTFS,UDL12, UDLO3, U1T48, U1T12, U1T03, ULDO3, ULD12, ULD48, UDF	CNC2F	3.03	41.56	29.82	12.96	10.34			2.69	2.69	1.56	1.56
		Virtual Collocation - 4-Fiber Cross Connects			AMTFS,UDL12, UDLO3, U1T48, U1T12, U1T03, ULDO3, ULD12, ULD48, UDF	CNC4F	6.06	50.53	38.78	16.97	14.35			2.69	2.69	1.56	1.56
		Virtual collocation - Special Access & UNE, cross-connect per DS1			USL,ULC,AMTFS, ULR, UXTD1, UNC1X, ULDD1, U1TD1, USLEL, UNLD1	CNC1X	1.32	32.22	17.76	10.46	8.75			2.07	2.81	0.67	1.41
		Virtual collocation - Special Acess & UNE, cross-connect per DS3			USL,ULC,AMTFS,UE3, U1TD3, UXTS1, UXTD3, UNC3X, UNCSX, ULDD3, U1TS1, ULDS1, UDLSX, UNLD3	CND3X	12.32	29.97	16.30	12.03	8.99			2.07	2.81	0.67	1.41
		Virtual Collocation - Co-Carrier Cross Connects - Fiber Cable Support Structure, per linear foot			AMTFS	VE1CB	0.0031										
		Virtual Collocation - Co-Carrier Cross Connects - Copper/Coax Cable Support Structure, per linear ft			AMTFS	VE1CD	0.0045										

COLLOCATION - Tennessee														Attachment: 4		Exhibit: B	
CATEGORY		RATE ELEMENTS	Interim	Zone	BCS	USOC	RATES ($)					Svc Order Submitted Elec per LSR	Svc Order Submitted Manually per LSR	Incremental Charge - Manual Svc Order vs. Electronic-1st	Incremental Charge - Manual Svc Order vs. Electronic-Add'l	Incremental Charge - Manual Svc Order vs. Electronic-Disc 1st	Incremental Charge - Manual Svc Order vs. Electronic-Disc Add'l
							Rec	Nonrecurring		Nonrecurring Disconnect		OSS Rates ($)					
								First	Add'l	First	Add'l	SOMEC	SOMAN	SOMAN	SOMAN	SOMAN	SOMAN
		Virtual Collocation - Co-Carrier Cross Connects - Fiber Cable Support Structure,per cable			AMTFS	VE1CC		555.03						2.07	2.81	0.67	1.41
		Virtual Collocation - Co-Carrier Cross Connects - Copper/Coax Cable Support Structure, per cable			AMTFS	VE1CE		555.03						2.07	2.81	0.67	1.41
		Virtual Collocation Cable Records - per request			AMTFS	VE1BA		1,711.00									
		Virtual Collocation Cable Records - VG/DS0 Cable, per cable record			AMTFS	VE1BB		925.06									
		Virtual Collocation Cable Records - VG/DS0 Cable, per each 100 pair			AMTFS	VE1BC		18.05	18.05								
		Virtual Collocation Cable Records - DS1, per T1TIE			AMTFS	VE1BD		8.45	8.45								
		Virtual Collocation Cable Records - DS3, per T3TIE			AMTFS	VE1BE		29.57	29.57								
		Virtual Collocation Cable Records - Fiber Cable, per 99 fiber records			AMTFS	VE1BF		279.42	279.42								
		Virtual collocation - Security Escort - Basic, per half hour			AMTFS	SPTBX		33.15	20.44					2.07	2.81	0.67	1.41
		Virtual collocation - Security Escort - Overtime, per half hour			AMTFS	SPTOX		41.50	25.61					2.07	2.81	0.67	1.41
		Virtual collocation - Security Escort - Premium, per half hour			AMTFS	SPTPX		49.86	30.79					2.07	2.81	0.67	1.41
		Virtual collocation - Maintenance in CO - Basic, per half hour			AMTFS	CTRLX		30.64	30.64					2.07	2.81	0.67	1.41
		Virtual collocation - Maintenance in CO - Overtime, per half hour			AMTFS	SPTOM		35.77	35.77					2.07	2.81	0.67	1.41
		Virtual collocation - Maintenance in CO - Premium per half hour			AMTFS	SPTPM		40.90	40.90					2.07	2.81	0.67	1.41
VIRTUAL COLLOCATION																	
		Virtual Collocation - 2-wire Cross Connect, Exchange Port 2-Wire Analog - Res			UEPSR	VE1R2	0.30	19.20	19.20					20.35	10.54	13.32	1.40
		Virtual Collocation 2-Wire Cross Connect, Exchange Port 2-Wire Line Side PBX Trunk - Bus			UEPSP	VE1R2	0.30	19.20	19.20					20.35	10.54	13.32	1.40
		Virtual Collocation 2-Wire Cross Connect, Exchange Port 2-Wire Voice Grade PBX Trunk - Res			UEPSE	VE1R2	0.30	19.20	19.20					20.35	10.54	13.32	1.40
		Virtual Collocation 2-Wire Cross Connect, Exchange Port 2-Wire Analog Bus			UEPSB	VE1R2	0.30	19.20	19.20					20.35	10.54	13.32	1.40
		Virtual Collocation 2-Wire Cross Connect, Exchnage Port 2-Wire ISDN			UEPSX	VE1R2	0.30	19.20	19.20					20.35	10.54	13.32	1.40
		Virtual Collocation 2-Wire Cross Connect, Exchange Port 2-Wire ISDN			UEPTX	VE1R2	0.30	19.20	19.20					20.35	10.54	13.32	1.40
		Virtual Collocation 4-Wire Cross Connect, Exchange Port 4-Wire ISDN DS1			UEPEX	VE1R4	0.50	19.20	19.20					20.35	10.54	13.32	1.40
	Note: Rates displaying an "R" in Interim column are interim and subject to rate true-up as set forth in General Terms and Conditions.																

Attachment 5

Access to Numbers and Number Portability

TABLE OF CONTENTS

1. NON-DISCRIMINATORY ACCESS TO TELEPHONE NUMBERS.....3

2. LOCAL SERVICE PROVIDER NUMBER PORTABILITY - PERMANENT SOLUTION (LNP).....3

3. OPERATIONAL SUPPORT SYSTEM (OSS) RATES.....4

ACCESS TO NUMBERS AND NUMBER PORTABILITY

1. NON-DISCRIMINATORY ACCESS TO TELEPHONE NUMBERS

1.1 During the term of this Agreement, where DPI is utilizing its own switch, DPI shall contact the North American Numbering Plan Administrator, NeuStar, for the assignment of numbering resources. In order to be assigned a Central Office Code, DPI will be required to complete the Central Office Code (NXX) Assignment Request and Confirmation Form (Code Request Form) in accordance with Industry Numbering Committee's Central Office Code (NXX) Assignment Guidelines (INC 95-0407-008).

1.2 Where BellSouth provides local switching or resold services to DPI, BellSouth will provide DPI with on-line access to intermediate telephone numbers as defined by applicable FCC rules and regulations on a first come first served basis. DPI acknowledges that such access to numbers shall be in accordance with the appropriate FCC rules and regulations. DPI acknowledges that there may be instances where there is a shortage of telephone numbers in a particular rate center; and in such instances, BellSouth may request that DPI return unused intermediate numbers to BellSouth. DPI shall return unused intermediate numbers to BellSouth upon BellSouth's request. BellSouth shall make all such requests on a nondiscriminatory basis.

1.3 BellSouth will allow DPI to designate up to 100 intermediate telephone numbers per rate center for DPI's sole use. Assignment, reservation and use of telephone numbers shall be governed by applicable FCC rules and regulations. DPI acknowledges that there may be instances where there is a shortage of telephone numbers in a particular rate center and BellSouth has the right to limit access to blocks of intermediate telephone numbers. These instances include: 1) where jeopardy status has been declared by the North American Numbering Plan (NANP) for a particular Numbering Plan Area (NPA); or 2) where a rate center has less than six months supply of numbering resources.

2. LOCAL SERVICE PROVIDER NUMBER PORTABILITY - PERMANENT SOLUTION (LNP)

2.1 The Parties will offer Number Portability in accordance with rules, regulations and guidelines adopted by the Commission, the FCC and industry fora.

2.2 <u>End User Line Charge</u>. Where DPI subscribes to BellSouth's local switching, BellSouth shall bill and DPI shall pay the end user line charge associated with implementing LNP as set forth in BellSouth's FCC Tariff No. 1. This charge is not subject to the resale discount set forth in Attachment 1 of this Agreement.

2.3 To limit service outage, BellSouth and DPI will adhere to the process flows and cutover guidelines for porting numbers as outlined in the LNP Reference Guide, as amended from time to time. The LNP Reference Guide, incorporated herein by reference, is accessible via the Internet at the following site: http://www.interconnection.bellsouth.com. All intervals referenced in the LNP Reference Guide shall apply to both BellSouth and DPI.

2.4 The Parties will set Location Routing Number (LRN) unconditional or 10-digit triggers where applicable. Where triggers are set, the porting Party will remove the ported number at the same time the trigger is removed.

2.5 A trigger order is a service order issued in advance of the porting of a number. A trigger order 1) initiates call queries to the AIN SS7 network in advance of the number being ported; and 2) provides for the new service provider to be in control of when a number ports.

2.6 Where triggers are not set, the Parties shall coordinate the porting of the number between service providers so as to minimize service interruptions to the End User.

2.7 BellSouth and DPI will work cooperatively to implement changes to LNP process flows ordered by the FCC or as recommended by standard industry forums addressing LNP.

3. OPERATIONAL SUPPORT SYSTEM (OSS) RATES

3.1 The terms, conditions and rates for OSS are as set forth in Attachment 2.

Attachment 6

Pre-Ordering, Ordering, Provisioning, Maintenance and Repair

TABLE OF CONTENTS

1. QUALITY OF PRE-ORDERING, ORDERING, PROVISIONING, MAINTENANCE AND REPAIR ... 3

2. ACCESS TO OPERATIONS SUPPORT SYSTEMS ... 3

3. MISCELLANEOUS ... 5

PRE-ORDERING, ORDERING, PROVISIONING, MAINTENANCE AND REPAIR

1. QUALITY OF PRE-ORDERING, ORDERING, PROVISIONING, MAINTENANCE AND REPAIR

1.1 BellSouth shall provide pre-ordering, ordering, provisioning, and maintenance and repair services to DPI that are equivalent to the pre-ordering, ordering, provisioning, and maintenance and repair services BellSouth provides to itself or any other CLEC where technically feasible. The guidelines for pre-ordering, ordering, provisioning, and maintenance and repair are set forth in the various guides and business rules, as appropriate, and as they are amended from time to time during this Agreement. The guides and business rules are found at http://www.interconnection.bellsouth.com and are incorporated herein by reference.

1.2 BellSouth shall provision services during its regular working hours. To the extent DPI requests provisioning of service to be performed outside BellSouth's regular working hours, or the work so requested requires BellSouth's technicians or Project Manager to work outside of regular working hours, overtime charges shall apply. Notwithstanding the foregoing, if such work is performed outside of regular working hours by a BellSouth technician or Project Manager during his or her scheduled shift and BellSouth does not incur any overtime charges in performing the work on behalf of DPI, BellSouth will not assess DPI additional charges beyond the rates and charges specified in this Agreement.

2. ACCESS TO OPERATIONS SUPPORT SYSTEMS

2.1 BellSouth shall provide DPI access to operations support systems (OSS) functions for pre-ordering, ordering, provisioning, maintenance and repair, and billing. BellSouth shall provide access to the OSS through manual and/or electronic interfaces as described in this Attachment. It is the sole responsibility of DPI to obtain the technical capability to access and utilize BellSouth's OSS interfaces. Specifications for DPI's access and use of BellSouth's electronic interfaces are set forth at www.interconnection.bellsouth.com and are incorporated herein by reference.

2.1.1 Pre-Ordering. In accordance with FCC and Commission rules and orders, BellSouth will provide electronic access to the following pre-ordering functions: service address validation, telephone number selection, service and feature availability, due date information, customer record information and loop makeup information. Access is provided through the Local Exchange Navigation System (LENS) interface and the Telecommunications Access Gateway (TAG) interface. Customer record information includes customer specific information in CRIS and RSAG. DPI shall provide to BellSouth access to customer record information, including circuit numbers associated with each telephone number where applicable.

DPI shall provide such information within four (4) hours after request via electronic access where available. If electronic access is not available, DPI shall provide to BellSouth paper copies of customer record information, including circuit numbers associated with each telephone number where applicable. If BellSouth requests the information before noon, the customer record information shall be provided the same day. If BellSouth requests the information after noon, the customer record information shall be provided by noon the following day.

2.1.2 The Parties agree not to view, copy, or otherwise obtain access to the customer record information of any customer without that customer's permission. DPI will obtain access to customer record information only in strict compliance with applicable laws, rules, or regulations of the state in which the service is provided. BellSouth reserves the right to audit DPI's access to customer record information. If a BellSouth audit of DPI's access to customer record information reveals that DPI is accessing customer record information without having obtained the proper End User authorization, BellSouth upon reasonable notice to DPI may take corrective action, including but not limited to suspending or terminating DPI's electronic access to BellSouth's OSS functionality. All such information obtained through an audit shall be deemed Information covered by the Proprietary and Confidential Information section in the General Terms and Conditions of this Agreement.

2.1.3 Service Ordering. BellSouth will make available the Electronic Data Interchange (EDI) interface and the TAG ordering interface for the purpose of exchanging order information, including order status and completion notification, for non-complex and certain complex resale requests and certain network elements. DPI may integrate the EDI interface or the TAG ordering interface with the TAG pre-ordering interface. In addition, BellSouth will provide integrated pre-ordering and ordering capability through the LENS interface for non-complex and certain complex resale service requests and certain network element requests.

2.1.4 Maintenance and Repair. DPI may report and monitor service troubles and obtain repair services from BellSouth via electronic interfaces. BellSouth provides several options for electronic trouble reporting. For exchange services, BellSouth offers DPI non-discriminatory access to the Trouble Analysis Facilitation Interface (TAFI). In addition, BellSouth offers an industry standard, machine-to-machine Electronic Communications Trouble Administration (ECTA) Gateway interface. For designed services, BellSouth provides non-discriminatory trouble reporting via the ECTA Gateway. BellSouth provides DPI an estimated time to repair, an appointment time or a commitment time, as appropriate, on trouble reports. Requests for trouble repair are billed in accordance with the provisions of this Agreement. BellSouth and DPI agree to adhere to BellSouth's Operational Understanding, as amended from time to time during this Agreement and as incorporated herein by reference. The Operational Understanding may be accessed via the Internet at http://www.interconnection.bellsouth.com.

2.2 Change Management. BellSouth provides a collaborative process for change management of the electronic interfaces through the Change Control Process (CCP). Guidelines for this process are set forth in the CCP document as amended from time to time during this Agreement. The CCP document may be accessed via the Internet at http://www.interconnection.bellsouth.com.

2.3 BellSouth's Versioning Policy for Electronic Interfaces. BellSouth's Versioning Policy is part of the Change Control Process (CCP). Pursuant to the CCP, BellSouth will issue new software releases for new industry standards for its EDI and TAG electronic interfaces. The Versioning Policy, including the appropriate notification to DPI, is set forth in the CCP document as amended from time to time during this Agreement. The CCP document may be accessed via the Internet at http://www.interconnection.bellsouth.com.

2.4 Rates. Charges for use of OSS shall be as set forth in this Agreement.

3. MISCELLANEOUS

3.1 Pending Orders. Orders placed in the hold or pending status by DPI will be held for a maximum of thirty (30) days from the date the order is placed on hold. After such time, DPI shall be required to submit a new service request. Incorrect or invalid requests returned to DPI for correction or clarification will be held for thirty (30) days. If DPI does not return a corrected request within thirty (30) days, BellSouth will cancel the request.

3.2 Single Point of Contact. DPI will be the single point of contact with BellSouth for ordering activity for network elements and other services used by DPI to provide services to its End Users, except that BellSouth may accept a request directly from another CLEC, or BellSouth, acting with authorization of the affected End User. DPI and BellSouth shall each execute a blanket letter of authorization with respect to customer requests so that prior proof of end-user authorization will not be necessary with every request (except in the case of a local service freeze). The Parties shall each be entitled to adopt their own internal processes for verification of customer authorization for requests, provided, however, that such processes shall comply with applicable state and federal law and industry and regulatory guidelines. Pursuant to a request from another carrier, BellSouth may disconnect any network element being used by DPI to provide service to that End User and may reuse such network elements or facilities to enable such other carrier to provide service to the End User. BellSouth will notify DPI that such a request has been processed but will not be required to notify DPI in advance of such processing.

3.2.1 Neither BellSouth nor DPI shall prevent or delay an end-user from migrating to another carrier because of unpaid bills, denied service, or contract terms.

3.2.2 BellSouth shall provide access to customer service records (CSRs), Firm Order Confirmations (FOCs) and Local Service Request (LSR) rejects within the intervals set forth in Attachment 9 of this Agreement.

3.2.3 DPI shall return a FOC to BellSouth within thirty-six (36) hours after DPI's receipt from BellSouth of a valid LSR.

3.2.4 DPI shall provide a Reject Response to BellSouth within twenty-four (24) hours after BellSouth's submission of an LSR which is incomplete or incorrectly formatted.

3.3 Use of Facilities. When a customer of DPI elects to discontinue service and to transfer service to another local exchange carrier, including BellSouth, BellSouth shall have the right to reuse the facilities provided to DPI by BellSouth. In addition, where BellSouth provides local switching, BellSouth may disconnect and reuse facilities when the facility is in a denied state and BellSouth has received a request to establish new service or transfer of service from a customer or a customer's CLEC at the same address served by the denied facility. BellSouth will notify DPI that such a request has been processed after the disconnect order has been completed.

3.4 Contact Numbers. The Parties agree to provide one another with toll-free nation-wide (50 states) contact numbers for the purpose of ordering, provisioning and maintenance of services.

3.5 Subscription Functions. In cases where BellSouth performs subscription functions for an interexchange carrier (IXC) (i.e. PIC and LPIC changes via Customer Account Record Exchange (CARE)), BellSouth will provide the affected IXCs with the Operating Company Number (OCN) of the local provider for the purpose of obtaining end user billing account and other end user information required under subscription requirements.

3.6 Cancellation Charges. If DPI cancels a request for network elements or resold services, any costs incurred by BellSouth in conjunction with the provisioning of that request will be recovered in accordance with BellSouth's Private Line Tariff or BellSouth's FCC No. 1 Tariff, Section 5.4, as applicable. Notwithstanding the foregoing, if DPI places an LSR based upon BellSouth's loop makeup information, and such information is inaccurate resulting in the inability of BellSouth to provision the network elements requested and another spare compatible facility cannot be found with the transmission characteristics of the network elements originally requested, cancellation charges described in this Section shall not apply. Where DPI places a single LSR for multiple network elements or services based upon loop makeup information, and information as to some, but not all, of the network elements or services is inaccurate, if BellSouth cannot provision the network elements or services that were the subject of the inaccurate loop makeup information, DPI may cancel its request for those network elements or services without incurring cancellation charges as described in this Section. In such

instance, should DPI elect to cancel the entire LSR, cancellation charges as described in this Section shall apply to those elements and services that were not the subject of inaccurate loop makeup.

3.7 Service Date Advancement Charges (a.k.a. Expedites). For Service Date Advancement requests by DPI, Service Date Advancement charges will apply for intervals less than the standard interval as outlined in the BellSouth Product and Services Interval Guide. The charges as outlined in BellSouth's FCC No. 1 Tariff, Section 5, will apply as applicable.

Attachment 7

Billing

TABLE OF CONTENTS

1. PAYMENT AND BILLING ARRANGEMENTS 3

2. BILLING DISPUTES 6

3. RAO HOSTING 7

4. OPTIONAL DAILY USAGE FILE 11

5. ACCESS DAILY USAGE FILE 13

6. ENHANCED OPTIONAL DAILY USAGE FILE (EODUF) 15

Rates……Exhibit A

BILLING

1. PAYMENT AND BILLING ARRANGEMENTS

The terms and conditions set forth in this Attachment shall apply to all services ordered and provisioned pursuant to this Agreement.

1.1 Billing. BellSouth will bill through the Carrier Access Billing System (CABS), Integrated Billing System (IBS) and/or the Customer Records Information System (CRIS) depending on the particular service(s) provided to DPI under this Agreement. BellSouth will format all bills in Carrier Billing Output Specification (CBOS) Standard or CLUB/EDI format, depending on the type of service provided. For those services where standards have not yet been developed, BellSouth's billing format will change as necessary when standards are finalized by the applicable industry forum.

1.1.1 For any service(s) BellSouth receives from DPI, DPI shall bill BellSouth in CBOS format.

1.1.2 Any switched access charges associated with interexchange carrier access to the resold local exchange lines will be billed by, and due to BellSouth.

1.1.3 BellSouth will render bills each month on established bill days for each of DPI's accounts. If either Party requests multiple billing media or additional copies of the bills, the billing Party will provide these at a reasonable cost.

1.1.4 BellSouth will bill DPI in advance for all services to be provided during the ensuing billing period except charges associated with service usage and nonrecurring charges, which will be billed in arrears.

1.1.4.1 Charges for services will be calculated on an individual End User account level, including, if applicable, any charge for usage or usage allowances. BellSouth will also bill DPI, and DPI will be responsible for and remit to BellSouth, all charges applicable to said services including but not limited to 911 and E911 charges, End Users common line charges, federal subscriber line charges, telecommunications relay charges (TRS), and franchise fees, unless otherwise ordered by a Commission.

1.1.5 BellSouth will not perform billing and collection services for DPI as a result of the execution of this Agreement.

1.1.6 In the event that this Agreement or an amendment to this Agreement effects a rate change to recurring rate elements that are billed in advance, BellSouth will make an adjustment to such recurring rates billed in advance at the previously effective rate. The adjustment shall reflect billing at the new rates from the Effective Date of the Agreement or amendment.

1.2 Establishing Accounts. After submitting a credit profile and deposit, if required, and after receiving certification as a local exchange carrier from the appropriate regulatory agency, DPI will provide the appropriate BellSouth advisory team/local contract manager the necessary documentation to enable BellSouth to establish accounts for Local Interconnection, Network Elements and Other Services, Collocation and/or resold services. Such documentation shall include the Application for Master Account, if applicable, proof of authority to provide telecommunications services, the appropriate Operating Company Numbers (OCN) for each state as assigned by the National Exchange Carriers Association (NECA), Carrier Identification Code (CIC), Access Customer Name and Abbreviation (ACNA), Blanket Letter of Authorization (LOA), Misdirected Number form, and a tax exemption certificate, if applicable. Notwithstanding anything to the contrary in this Agreement, DPI may not order services under a new account established in accordance with this Section 1.2 until 30 days after all information specified in this Section 1.2 is received from DPI.

1.2.1 OCN. If DPI needs to change its OCN(s) under which it operates when DPI has already been conducting business utilizing those OCN(s), DPI shall bear all costs incurred by BellSouth to convert DPI to the new OCN(s). OCN conversion charges include all time required to make system updates to all of DPI's End User customer records and will be handled by the BFR/NBR process.

1.2.2 Payment Responsibility. Payment of all charges will be the responsibility of DPI. DPI shall make payment to BellSouth for all services billed. Payments made by DPI to BellSouth as payment on account will be credited to DPI's accounts receivable master account. BellSouth will not become involved in billing disputes that may arise between DPI and DPI's customer.

1.3 Payment Due. Payment for services provided is due on or before the next bill date in immediately available funds. Payment is considered to have been made when received by BellSouth.

1.4 Due Dates. If the payment due date falls on a Sunday or on a holiday that is observed on a Monday, the payment due date shall be the first non-holiday day following such Sunday or holiday. If the payment due date falls on a Saturday or on a holiday which is observed on Tuesday, Wednesday, Thursday, or Friday, the payment due date shall be the last non-holiday day preceding such Saturday or holiday. If payment is not received by the payment due date, a late payment charge, as set forth in Section 1.6, below, shall apply.

1.5 Tax Exemption. Upon BellSouth's receipt of tax exemption certificate, the total amount billed to DPI will not include those taxes or fees from which DPI is exempt. DPI will be solely responsible for the computation, tracking, reporting and payment of all taxes and like fees associated with the services provided to the End User of DPI.

1.6 Late Payment. If any portion of the payment is not received by BellSouth on or before the payment due date as set forth preceding, or if any portion of the payment is received by BellSouth in funds that are not immediately available to BellSouth, then a late payment charge shall be due to BellSouth. The late payment charge shall be the portion of the payment not received by the payment due date multiplied by a late factor and will be applied on a per bill basis. The late factor shall be as set forth in Section A2 of the General Subscriber Services Tariff, Section B2 of the Private Line Service Tariff or Section E2 of the Intrastate Access Tariff, as appropriate. In addition to any applicable late payment charges, DPI may be charged a fee for all returned checks as set forth in Section A2 of the General Subscriber Services Tariff or pursuant to the applicable state law.

1.7 Discontinuing Service to DPI. The procedures for discontinuing service to DPI are as follows:

1.7.1 BellSouth reserves the right to suspend or terminate service in the event of prohibited, unlawful or improper use of BellSouth facilities or service, abuse of BellSouth facilities, or any other violation or noncompliance by DPI of the rules and regulations of BellSouth's tariffs.

1.7.2 BellSouth reserves the right to suspend or terminate service for nonpayment. If payment of amounts not subject to a billing dispute, as described in Section 2, is not received by the bill date in the month after the original bill date, BellSouth will provide written notice to DPI that additional applications for service may be refused, that any pending orders for service may not be completed, and/or that access to ordering systems may be suspended if payment of such amounts, and all other amounts not in dispute that become past due before refusal, incompletion or suspension, is not received by the fifteenth day following the date of the notice. In addition, BellSouth may, at the same time, provide written notice to the person designated by DPI to receive notices of noncompliance that BellSouth may discontinue the provision of existing services to DPI if payment of such amounts, and all other amounts not in dispute that become past due before discontinuance, is not received by the thirtieth day following the date of the initial notice.

1.7.3 In the case of discontinuance of services, all billed charges, as well as applicable termination charges, shall become due.

1.7.4 Discontinuance of service on DPI's account will effect a discontinuance of service to DPI's End Users. BellSouth will reestablish service for DPI upon payment of all past due charges and the appropriate connection fee subject to BellSouth's normal application procedures. DPI is solely responsible for notifying the End User of the discontinuance of the service. If within fifteen (15) days after DPI's service has been discontinued and no arrangements to reestablish service have been made consistent with this subsection, DPI's service will be disconnected.

1.8 Deposit Policy. DPI shall complete the BellSouth Credit Profile and provide information to BellSouth regarding credit worthiness. Based on the results of the credit analysis, BellSouth reserves the right to secure the account with a suitable form of security deposit. Such security deposit shall take the form of cash, an Irrevocable Letter of Credit (BellSouth form), Surety Bond (BellSouth form) or, in BellSouth's sole discretion, some other form of security proposed by DPI. Any such security deposit shall in no way release DPI from its obligation to make complete and timely payments of its bill. DPI shall pay any applicable deposits prior to the inauguration of service. If, in the sole opinion of BellSouth, circumstances so warrant and/or gross monthly billing has increased beyond the level initially used to determine the level of security deposit, BellSouth reserves the right to request additional security and/or file a Uniform Commercial Code (UCC-1) security interest in DPI's "accounts receivables and proceeds." Interest on a security deposit, if provided in cash, shall accrue and be paid in accordance with the terms in the appropriate BellSouth tariff. Security deposits collected under this Section shall not exceed two months' estimated billing. In the event DPI fails to remit to BellSouth any deposit requested pursuant to this Section, service to DPI may be terminated in accordance with the terms of Section 1.7 of this Attachment, and any security deposits will be applied to DPI's account(s). In the event DPI defaults on its account, service to DPI will be terminated in accordance with the terms of Section 1.7 above, and any security deposits will be applied to DPI's account.

1.9 Notices. Notwithstanding anything to the contrary in this Agreement, all bills and notices regarding billing matters, including notices relating to security deposits, disconnection of services for nonpayment of charges, and rejection of additional orders from DPI, shall be forwarded to the individual and/or address provided by DPI in establishment of its billing account(s) with BellSouth, or to the individual and/or address subsequently provided by DPI as the contact for billing information. All monthly bills and notices described in this Section shall be forwarded to the same individual and/or address; provided, however, upon written request from DPI to BellSouth's billing organization, the notice of discontinuance of services purchased by DPI under this Agreement provided for in Section 1.7.2 of this Attachment shall be sent via certified mail to the individual(s) listed in the Notices provision of the General Terms and Conditions of this Agreement.

1.10 Rates. Rates for Optional Daily Usage File (ODUF), Access Daily Usage File (ADUF), Enhanced Optional Daily Usage File (EODUF) and Centralized Message Distribution Service (CMDS) are set out in Exhibit A to this Attachment. If no rate is identified in this Attachment, the rate for the specific service or function will be as set forth in the applicable BellSouth tariff or as negotiated by the Parties upon request by either Party.

2. BILLING DISPUTES

2.1 Each Party agrees to notify the other Party in writing upon the discovery of a billing dispute. DPI shall report all billing disputes to BellSouth using the Billing Adjustment Request Form (RF 1461) provided by BellSouth. In the event of a billing dispute, the Parties will endeavor to resolve the dispute within sixty (60) calendar days of the notification date. If the Parties are unable within the 60 day period to reach resolution, then the aggrieved Party may pursue dispute resolution in accordance with the General Terms and Conditions of this Agreement.

2.2 For purposes of this Section 2, a billing dispute means a reported dispute of a specific amount of money actually billed by either Party. The dispute must be clearly explained by the disputing Party and supported by written documentation, which clearly shows the basis for disputing charges. A billing dispute will not include the refusal to pay all or part of a bill or bills when no written documentation is provided to support the dispute, nor shall a billing dispute include the refusal to pay other amounts owed by the billed Party until the dispute is resolved. Claims by the billed Party for damages of any kind will not be considered a billing dispute for purposes of this Section. If the billing dispute is resolved in favor of the billing Party, the disputing Party will make immediate payment of any of the disputed amount owed to the billing Party or the billing Party shall have the right to pursue normal treatment procedures. Any credits due to the disputing Party, pursuant to the billing dispute, will be applied to the disputing Party's account by the billing Party immediately upon resolution of the dispute.

2.3 If a Party disputes a charge and does not pay such charge by the payment due date, or if a payment or any portion of a payment is received by either Party after the payment due date, or if a payment or any portion of a payment is received in funds which are not immediately available to the other Party, then a late payment charge and interest, where applicable, shall be assessed. For bills rendered by either Party for payment, the late payment charge for both Parties shall be calculated based on the portion of the payment not received by the payment due date multiplied by the late factor as set forth in the following BellSouth tariffs: for services purchased from the General Subscribers Services Tariff for purposes of resale and for ports and non-designed loops, Section A2 of the General Subscriber Services Tariff; for services purchased from the Private Line Tariff for purposes of resale, Section B2 of the Private Line Service Tariff; and for designed network elements and other services and local interconnection charges, Section E2 of the Access Service Tariff. The Parties shall assess interest on previously assessed late payment charges only in a state where it has the authority pursuant to its tariffs.

3. RAO HOSTING

3.1 RAO Hosting, Calling Card and Third Number Settlement System (CATS) and Non-Intercompany Settlement System (NICS) services provided to DPI by BellSouth will be in accordance with the methods and practices regularly applied

by BellSouth to its own operations during the term of this Agreement, including such revisions as may be made from time to time by BellSouth.

3.2 DPI shall furnish all relevant information required by BellSouth for the provision of RAO Hosting, CATS and NICS.

3.3 Charges or credits, as applicable, will be applied by BellSouth to DPI on a monthly basis in arrears. Amounts due (excluding adjustments) are payable within thirty (30) days of receipt of the billing statement.

3.4 DPI must have its own unique hosted RAO code. Where BellSouth is the selected CMDS interfacing host, DPI must request that BellSouth establish a unique hosted RAO code for DPI. Such request shall be in writing to the BellSouth RAO Hosting coordinator and must be submitted at least eight (8) weeks prior to provision of services pursuant to this Section. Services shall commence on a date mutually agreed by the Parties.

3.5 BellSouth will receive messages from DPI that are to be processed by BellSouth, another LEC in the BellSouth region or a LEC outside the BellSouth region. DPI shall send all messages to BellSouth no later than sixty (60) days after the message date.

3.6 BellSouth will perform invoice sequence checking, standard EMI format editing, and balancing of message data with the EMI trailer record counts on all data received from DPI.

3.7 All data received from DPI that is to be processed or billed by another LEC within the BellSouth region will be distributed to that LEC in accordance with the Agreement(s) in effect between BellSouth and the involved LEC.

3.8 All data received from DPI that is to be placed on the CMDS network for distribution outside the BellSouth region will be handled in accordance with the agreement(s) in effect between BellSouth and its connecting contractor.

3.9 BellSouth will receive messages from the CMDS network that are destined to be processed by DPI and will forward them to DPI on a daily basis for processing.

3.10 Transmission of message data between BellSouth and DPI will be via CONNECT:Direct or Secure File Transfer Protocol (FTP).

3.10.1 Data circuits (private line or dial-up) will be required between BellSouth and DPI for the purpose of data transmission when utilizing CONNECT:Direct. Where a dedicated line is required, DPI will be responsible for ordering the circuit and coordinating the installation with BellSouth. DPI is responsible for any charges associated with this line. Equipment required on the BellSouth end to attach the line to the mainframe computer and to transmit data will be negotiated on an individual case basis. Where a dial-up facility is required, dial circuits will be

installed in the BellSouth data center by BellSouth and the associated charges assessed to DPI. Additionally, all message toll charges associated with the use of the dial circuit by DPI will be the responsibility of DPI. Associated equipment on the BellSouth end, including a modem, will be negotiated on an individual case basis between the Parties. All equipment, including modems and software, that is required on the DPI end for the purpose of data transmission will be the responsibility of DPI.

3.10.2 If DPI utilizes Secure File Transfer Protocol for data file transmission, purchase of the Secure File Transfer Protocol software will be the responsibility of DPI.

3.11 All messages and related data exchanged between BellSouth and DPI will be formatted for EMI formatted records and packed between appropriate EMI header and trailer records in accordance with accepted industry standards.

3.12 DPI will maintain recorded message detail necessary to recreate files provided to BellSouth for a period of three (3) calendar months beyond the related message dates.

3.13 Should it become necessary for DPI to send data to BellSouth more than sixty (60) days past the message date(s), DPI will notify BellSouth in advance of the transmission of the data. BellSouth will work with its connecting contractor and/or DPI, where necessary, to notify all affected LECs.

3.14 In the event that data to be exchanged between the two Parties should become lost or destroyed, the Party responsible for creating the data will make every effort to restore and retransmit such data. If the data cannot be retrieved, the Party responsible for losing or destroying the data will be liable to the other Party for any resulting lost revenue. Lost revenue may be a combination of revenues that could not be billed to the End Users and associated access revenues. Both Parties will work together to estimate the revenue amount based upon historical data through a method mutually agreed upon. The resulting estimated revenue loss will be paid by the responsible Party to the other Party within three (3) calendar months of the resolution of the amount owed, or as mutually agreed upon by the Parties.

3.15 Should an error be detected by the EMI format edits performed by BellSouth on data received from DPI, the entire pack containing the affected data will not be processed by BellSouth. BellSouth will notify DPI of the error. DPI will correct the error(s) and will resend the entire pack to BellSouth for processing. In the event that an out-of-sequence condition occurs on subsequent packs, DPI will resend these packs to BellSouth after the pack containing the error has been successfully reprocessed by BellSouth.

3.16 In association with message distribution service, BellSouth will provide DPI with associated intercompany settlements reports (CATS and NICS) as appropriate.

3.17 Notwithstanding anything in this Agreement to the contrary, in no case shall either Party be liable to the other for any direct or consequential damages incurred as a result of the obligations set out in this Section 3.

3.18 Intercompany Settlements Messages

3.18.1 Intercompany Settlements Messages facilitate the settlement of revenues associated with traffic originated from or billed by DPI as a facilities based provider of local exchange telecommunications services outside the BellSouth region. Only traffic that originates in one Bell operating territory and bills in another Bell operating territory is included. Traffic that originates and bills within the same Bell operating territory will be settled on a local basis between DPI and the involved company(ies), unless that company is participating in NICS.

3.18.2 Both traffic that originates outside the BellSouth region by DPI and is billed within the BellSouth region, and traffic that originates within the BellSouth region and is billed outside the BellSouth region by DPI, is covered by CATS. Also covered is traffic that either is originated by or billed by DPI, involves a company other than DPI, qualifies for inclusion in the CATS settlement, and is not originated or billed within the BellSouth region (NICS).

3.18.3 Once DPI is operating within the BellSouth territory, revenues associated with calls originated and billed within the BellSouth region will be settled via NICS.

3.18.4 BellSouth will receive the monthly NICS reports from Telcordia on behalf of DPI. BellSouth will distribute copies of these reports to DPI on a monthly basis.

3.18.5 BellSouth will receive the monthly CATS reports from Telcordia on behalf of DPI. BellSouth will distribute copies of these reports to DPI on a monthly basis.

3.18.6 BellSouth will collect the revenue earned by DPI from the Bell operating company in whose territory the messages are billed via CATS, less a per message billing and collection fee of five cents ($0.05), on behalf of DPI. BellSouth will remit the revenue billed by DPI to the Bell operating company in whose territory the messages originated, less a per message billing and collection fee of five cents ($0.05), on behalf on DPI. These two amounts will be netted together by BellSouth and the resulting charge or credit issued to DPI via a monthly Carrier Access Billing System (CABS) miscellaneous bill.

3.18.7 BellSouth will collect the revenue earned by DPI within the BellSouth territory from another CLEC also within the BellSouth territory (NICS) where the messages are billed, less a per message billing and collection fee of five cents ($0.05), on behalf of DPI. BellSouth will remit the revenue billed by DPI within the BellSouth region to the CLEC also within the BellSouth region, where the messages originated, less a per message billing and collection fee of five cents

($0.05). These two amounts will be netted together by BellSouth and the resulting charge or credit issued to DPI via a monthly CABS miscellaneous bill.

3.18.8 BellSouth and DPI agree that monthly netted amounts of less than fifty dollars ($50.00) will not be settled.

4. OPTIONAL DAILY USAGE FILE

4.1 Upon written request from DPI, BellSouth will provide the Optional Daily Usage File (ODUF) service to DPI pursuant to the terms and conditions set forth in this section.

4.2 DPI shall furnish all relevant information required by BellSouth for the provision of the ODUF.

4.3 The ODUF feed will contain billable messages that were carried over the BellSouth Network and processed in the BellSouth Billing System, but billed to a DPI customer.

4.4 Charges for the ODUF will appear on DPIs' monthly bills for the previous month's usage. The charges are as set forth in Exhibit A to this Attachment. DPI will be billed at the ODUF rates that are in effect at the end of the previous month.

4.5 The ODUF feed will contain both rated and unrated messages. All messages will be in the standard Alliance for Telecommunications Industry Solutions (ATIS) EMI record format.

4.6 Messages that error in the billing system of DPI will be the responsibility of DPI. If, however, DPI should encounter significant volumes of errored messages that prevent processing by DPI within its systems, BellSouth will work with DPI to determine the source of the errors and the appropriate resolution.

4.7 The following specifications shall apply to the ODUF feed.

4.7.1 ODUF Messages to be Transmitted

4.7.1.1 The following messages recorded by BellSouth will be transmitted to DPI:

4.7.1.1.1 Message recording for per use/per activation type services (examples:

Three -Way Calling, Verify, Interrupt, Call Return, etc.)

4.7.1.1.2 Measured billable Local

4.7.1.1.3 Directory Assistance messages

4.7.1.1.4 IntraLATA Toll

4.7.1.1.5 WATS and 800 Service

4.7.1.1.6 N11

4.7.1.1.7 Information Service Provider Messages

4.7.1.1.8 Operator Services Messages

4.7.1.1.9 Operator Services Message Attempted Calls (Network Element only)

4.7.1.1.10 Credit/Cancel Records

4.7.1.1.11 Usage for Voice Mail Message Service

4.7.1.2 Rated Incollects (messages BellSouth receives from other revenue accounting offices) can also be on ODUF. Rated Incollects will be intermingled with BellSouth recorded rated and unrated usage. Rated Incollects will not be packed separately.

4.7.1.3 BellSouth will perform duplicate record checks on records processed to ODUF. Any duplicate messages detected will be deleted and not sent to DPI.

4.7.1.4 In the event that DPI detects a duplicate on ODUF they receive from BellSouth, DPI will drop the duplicate message and will not return the duplicate to BellSouth.

4.7.2 ODUF Physical File Characteristics

4.7.2.1 ODUF will be distributed to DPI via CONNECT:Direct, Secure File Transfer Protocol (FTP) or another mutually agreed medium. The ODUF feed will be a variable block format. The data on the ODUF feed will be in a non-compacted EMI format (175 byte format plus modules). It will be created on a daily basis Monday through Friday except holidays. Details such as dataset name and delivery schedule will be addressed during negotiations of the distribution medium. There will be a maximum of one dataset per workday per OCN.

4.7.2.2 Data circuits (private line or dial-up) will be required between BellSouth and DPI for the purpose of data transmission as set forth in Section 3.10.1 above.

4.7.2.3 If DPI utilizes Secure File Transfer Protocol (FTP) for data file transmission, purchase of the Secure File Transfer Protocol (FTP) software will be the responsibility of DPI.

4.7.3 ODUF Packing Specifications

4.7.3.1 A pack will contain a minimum of one message record or a maximum of 99,999 message records plus a pack header record and a pack trailer record. One transmission can contain a maximum of 99 packs and a minimum of one pack.

4.7.3.2 The OCN, From RAO, and Invoice Number will control the invoice sequencing. The From RAO will be used to identify to DPI which BellSouth RAO that is

sending the message. BellSouth and DPI will use the invoice sequencing to control data exchange. BellSouth will be notified of sequence failures identified by DPI and resend the data as appropriate.

The data will be packed using ATIS EMI records.

4.7.4 ODUF Pack Rejection

4.7.4.1 DPI will notify BellSouth within one business day of rejected packs (via the mutually agreed medium). Packs could be rejected because of pack sequencing discrepancies or a critical edit failure on the Pack Header or Pack Trailer records (i.e. out-of-balance condition on grand totals, invalid data populated). Standard ATIS EMI error codes will be used. DPI will not be required to return the actual rejected data to BellSouth. Rejected packs will be corrected and retransmitted to DPI by BellSouth.

4.7.5 ODUF Control Data

4.7.5.1 DPI will send one confirmation record per pack that is received from BellSouth. This confirmation record will indicate DPI's receipt of the pack and acceptance or rejection of the pack. Pack Status Code(s) will be populated using standard ATIS EMI error codes for packs that were rejected by DPI for reasons stated in the above section.

4.7.6 ODUF Testing

4.7.6.1 Upon request from DPI, BellSouth shall send ODUF test files to DPI. The Parties agree to review and discuss the ODUF content and/or format. For testing of usage results, BellSouth shall request that DPI set up a production (live) file. The live test may consist of DPI's employees making test calls for the types of services DPI requests on ODUF. These test calls are logged by DPI, and the logs are provided to BellSouth. These logs will be used to verify the files. Testing will be completed within 30 calendar days from the date on which the initial test file was sent.

5. ACCESS DAILY USAGE FILE

5.1 Upon written request from DPI, BellSouth will provide the Access Daily Usage File (ADUF) service to DPI pursuant to the terms and conditions set forth in this section.

5.2 DPI shall furnish all relevant information required by BellSouth for the provision of ADUF.

5.3 ADUF will contain access messages associated with a port that DPI has purchased from BellSouth

5.4 Charges for ADUF will appear on DPI's monthly bills for the previous month's usage. The charges are as set forth in Exhibit A to this Attachment. DPI will be billed at the ADUF rates that are in effect at the end of the previous month.

5.5 Messages that error in the billing system of DPI will be the responsibility of DPI. If, however, DPI should encounter significant volumes of errored messages that prevent processing by DPI within its systems, BellSouth will work with DPI to determine the source of the errors and the appropriate resolution.

5.6 ADUF Messages To Be Transmitted

5.6.1 The following messages recorded by BellSouth will be transmitted to DPI:

5.6.1.1 Recorded originating and terminating interstate and intrastate access records associated with a port.

5.6.1.2 Recorded terminating access records for undetermined jurisdiction access records associated with a port.

5.6.2 BellSouth will perform duplicate record checks on records processed to ADUF. Any duplicate messages detected will be dropped and not sent to DPI.

5.6.3 In the event that DPI detects a duplicate on ADUF they receive from BellSouth, DPI will drop the duplicate message and will not return the duplicate to BellSouth.

5.6.4 ADUF Physical File Characteristics

5.6.4.1 ADUF will be distributed to DPI via CONNECT:Direct, Secure File Transfer Protocol (FTP) or another mutually agreed medium. The ADUF feed will be a fixed block format. The data on the ADUF feed will be in a non-compacted EMI format (210 byte). It will be created on a daily basis Monday through Friday except holidays. Details such as dataset name and delivery schedule will be addressed during negotiations of the distribution medium. There will be a maximum of one dataset per workday per OCN.

5.6.4.2 Data circuits (private line or dial-up) will be required between BellSouth and DPI for the purpose of data transmission as set forth in Section 3.10.1 above.

5.6.4.3 If DPI utilizes Secure File Transfer Protocol (FTP) for data file transmission, purchase of the Secure File Transfer Protocol (FTP) software will be the responsibility of DPI.

5.6.5 ADUF Packing Specifications

5.6.5.1 A pack will contain a minimum of one message record or a maximum of 99,999 message records plus a pack header record and a pack trailer record. One transmission can contain a maximum of 99 packs and a minimum of one pack.

5.6.5.2 The OCN, From RAO, and Invoice Number will control the invoice sequencing. The From RAO will be used to identify to DPI which BellSouth RAO is sending the message. BellSouth and DPI will use the invoice sequencing to control data exchange. BellSouth will be notified of sequence failures identified by DPI and resend the data as appropriate.

The data will be packed using ATIS EMI records.

5.6.6 ADUF Pack Rejection

5.6.6.1 DPI will notify BellSouth within one business day of rejected packs (via the mutually agreed medium). Packs could be rejected because of pack sequencing discrepancies or a critical edit failure on the Pack Header or Pack Trailer records (i.e. out-of-balance condition on grand totals, invalid data populated). Standard ATIS EMI error codes will be used. DPI will not be required to return the actual rejected data to BellSouth. Rejected packs will be corrected and retransmitted to DPI by BellSouth.

5.6.7 ADUF Control Data

5.6.7.1 DPI will send one confirmation record per pack that is received from BellSouth. This confirmation record will indicate DPI's receipt of the pack and acceptance or rejection of the pack. Pack Status Code(s) will be populated using standard ATIS EMI error codes for packs that were rejected by DPI for reasons stated in the above section.

5.6.8 ADUF Testing

5.6.8.1 Upon request from DPI, BellSouth shall send a test file of generic data to DPI via Connect:Direct or Text File via E-Mail. The Parties agree to review and discuss the test file's content and/or format.

6. ENHANCED OPTIONAL DAILY USAGE FILE (EODUF)

6.1 Upon written request from DPI, BellSouth will provide the Enhanced Optional Daily Usage File (EODUF) service to DPI pursuant to the terms and conditions set forth in this section. EODUF will only be sent to existing ODUF subscribers who request the EODUF option.

6.2 DPI shall furnish all relevant information required by BellSouth for the provision of the Enhanced Optional Daily Usage File.

6.3 The Enhanced Optional Daily Usage File (EODUF) will provide usage data for local calls originating from resold Flat Rate Business and Residential Lines.

6.4 Charges for delivery of the Enhanced Optional Daily Usage File will appear on DPI's monthly bills for the previous month's usage. The charges are as set forth in

Exhibit A to this Attachment. DPI will be billed at the EODUF rates that are in effect at the end of the previous month.

6.5 All messages will be in the standard Alliance for Telecommunications Industry Solutions (ATIS) EMI record format.

6.6 Messages that error in the billing system of DPI will be the responsibility of DPI. If, however, DPI should encounter significant volumes of errored messages that prevent processing by DPI within its systems, BellSouth will work with DPI to determine the source of the errors and the appropriate resolution.

6.7 The following specifications shall apply to the EODUF feed.

6.7.1 Usage To Be Transmitted

6.7.1.1 The following messages recorded by BellSouth will be transmitted to DPI:

6.7.1.1.1 Customer usage data for flat rated local call originating from DPI's End User lines (1FB or 1FR). The EODUF record for flat rate messages will include:

6.7.1.1.2 Date of Call

6.7.1.1.3 From Number

6.7.1.1.4 To Number

6.7.1.1.5 Connect Time

6.7.1.1.6 Conversation Time

6.7.1.1.7 Method of Recording

6.7.1.1.8 From RAO

6.7.1.1.9 Rate Class

6.7.1.1.10 Message Type

6.7.1.1.11 Billing Indicators

6.7.1.1.12 Bill to Number

6.7.1.2 BellSouth will perform duplicate record checks on EODUF records processed to Optional Daily Usage File. Any duplicate messages detected will be deleted and not sent to DPI.

6.7.1.3 In the event that DPI detects a duplicate on Enhanced Optional Daily Usage File they receive from BellSouth, DPI will drop the duplicate message (DPI will not return the duplicate to BellSouth).

6.7.2 Physical File Characteristics

6.7.2.1 The EODUF feed will be distributed to DPI over their existing Optional Daily Usage File (ODUF) feed. The EODUF messages will be intermingled among DPI's Optional Daily Usage File (ODUF) messages. The EODUF will be a variable block format (2476) with an LRECL of 2472. The data on the EODUF will be in a non-compacted EMI format (175 byte format plus modules). It will be created on a daily basis (Monday through Friday except holidays).

6.7.2.2 Data circuits (private line or dial-up) may be required between BellSouth and DPI for the purpose of data transmission. Where a dedicated line is required, DPI will be responsible for ordering the circuit, overseeing its installation and coordinating the installation with BellSouth. DPI will also be responsible for any charges associated with this line. Equipment required on the BellSouth end to attach the line to the mainframe computer and to transmit successfully ongoing will be negotiated on an individual case basis. Where a dial-up facility is required, dial circuits will be installed in the BellSouth data center by BellSouth and the associated charges assessed to DPI. Additionally, all message toll charges associated with the use of the dial circuit by DPI will be the responsibility of DPI. Associated equipment on the BellSouth end, including a modem, will be negotiated on an individual case basis between the Parties. All equipment, including modems and software, that is required on DPI's end for the purpose of data transmission will be the responsibility of DPI.

6.7.3 Packing Specifications

6.7.3.1 A pack will contain a minimum of one message record or a maximum of 99,999 message records plus a pack header record and a pack trailer record. One transmission can contain a maximum of 99 packs and a minimum of one pack.

6.7.3.2 The Operating Company Number (OCN), From Revenue Accounting Office (RAO), and Invoice Number will control the invoice sequencing. The From RAO will be used to identify to DPI which BellSouth RAO is sending the message. BellSouth and DPI will use the invoice sequencing to control data exchange. BellSouth will be notified of sequence failures identified by DPI and resend the data as appropriate.

6.7.3.3 The data will be packed using ATIS EMI records.

ODUF/ADUF/EODUF/CMDS - Alabama														Attachment: 7		Exhibit: A	
CATEGORY		RATE ELEMENTS	Interim	Zone	BCS	USOC	RATES ($)					Svc Order Submitted Elec per LSR	Svc Order Submitted Manually per LSR	Incremental Charge - Manual Svc Order vs. Electronic-1st	Incremental Charge - Manual Svc Order vs. Electronic-Add'l	Incremental Charge - Manual Svc Order vs. Electronic-Disc 1st	Incremental Charge - Manual Svc Order vs. Electronic-Disc Add'l
							Rec	Nonrecurring		Nonrecurring Disconnect		OSS Rates ($)					
								First	Add'l	First	Add'l	SOMEC	SOMAN	SOMAN	SOMAN	SOMAN	SOMAN
ODUF/ADUF/OEDUF/CMDS																	
	ACCESS DAILY USAGE FILE (ADUF)																
		ADUF: Message Processing, per message				N/A	0.007037										
		ADUF: Data Transmission (CONNECT:DIRECT), per message				N/A	0.000113										
	OPTIONAL DAILY USAGE FILE (ODUF)																
		ODUF: Recording, per message				N/A	0.000011										
		ODUF: Message Processing, per message				N/A	0.004101										
		ODUF: Message Processing, per Magnetic Tape provisioned				N/A	42.67										
		ODUF: Data Transmission (CONNECT:DIRECT), per message				N/A	0.000094										
	CENTRALIZED MESSAGE DISTRIBUTION SERVICE (CMDS)																
		CMDS: Message Processing, per message				N/A	0.004										
		CMDS: Data Transmission (CONNECT:DIRECT), per message				N/A	0.001										
	ENHANCED OPTIONAL DAILY USAGE FILE (EODUF)																
		EODUF: Message Processing, per message				N/A	0.22										
	Notes: If no rate is identified in the contract, the rate for the specific service or function will be as set forth in applicable BellSouth tariff or as negotiated by the Parties upon request by either Party.																

ODUF/ADUF/EODUF/CMDS - Florida														Attachment: 7		Exhibit: A	
CATEGORY		RATE ELEMENTS	Interim	Zone	BCS	USOC	RATES ($)					Svc Order Submitted Elec per LSR	Svc Order Submitted Manually per LSR	Incremental Charge - Manual Svc Order vs. Electronic-1st	Incremental Charge - Manual Svc Order vs. Electronic-Add'l	Incremental Charge - Manual Svc Order vs. Electronic-Disc 1st	Incremental Charge - Manual Svc Order vs. Electronic-Disc Add'l
							Rec	Nonrecurring		Nonrecurring Disconnect		OSS Rates ($)					
								First	Add'l	First	Add'l	SOMEC	SOMAN	SOMAN	SOMAN	SOMAN	SOMAN
ODUF/ADUF/OEDUF/CMDS																	
	ACCESS DAILY USAGE FILE (ADUF)																
		ADUF: Message Processing, per message				N/A	0.001656										
		ADUF: Data Transmission (CONNECT:DIRECT), per message				N/A	0.0001245										
	OPTIONAL DAILY USAGE FILE (ODUF)																
		ODUF: Recording, per message				N/A	0.0000071										
		ODUF: Message Processing, per message				N/A	0.002146										
		ODUF: Message Processing, per Magnetic Tape provisioned				N/A	35.91										
		ODUF: Data Transmission (CONNECT:DIRECT), per message				N/A	0.00010375										
	CENTRALIZED MESSAGE DISTRIBUTION SERVICE (CMDS)																
		CMDS: Message Processing, per message				N/A	0.004										
		CMDS: Data Transmission (CONNECT:DIRECT), per message				N/A	0.001										
	ENHANCED OPTIONAL DAILY USAGE FILE (EODUF)																
		EODUF: Message Processing, per message				N/A	0.080698										
	Notes: If no rate is identified in the contract, the rate for the specific service or function will be as set forth in applicable BellSouth tariff or as negotiated by the Parties upon request by either Party.																

ODUF/ADUF/EODUF/CMDS - Georgia														Attachment: 7		Exhibit: A	
CATEGORY		RATE ELEMENTS	Interim	Zone	BCS	USOC	RATES ($)					Svc Order Submitted Elec per LSR	Svc Order Submitted Manually per LSR	Incremental Charge - Manual Svc Order vs. Electronic-1st	Incremental Charge - Manual Svc Order vs. Electronic-Add'l	Incremental Charge - Manual Svc Order vs. Electronic-Disc 1st	Incremental Charge - Manual Svc Order vs. Electronic-Disc Add'l
							Rec	Nonrecurring		Nonrecurring Disconnect		OSS Rates ($)					
								First	Add'l	First	Add'l	SOMEC	SOMAN	SOMAN	SOMAN	SOMAN	SOMAN
ODUF/ADUF/OEDUF/CMDS																	
	ACCESS DAILY USAGE FILE (ADUF)																
		ADUF: Message Processing, per message				N/A	0.0136327										
		ADUF: Data Transmission (CONNECT:DIRECT), per message				N/A	0.0000434										
	OPTIONAL DAILY USAGE FILE (ODUF)																
		ODUF: Recording, per message				N/A	0.0001275										
		ODUF: Message Processing, per message				N/A	0.0082548										
		ODUF: Message Processing, per Magnetic Tape provisioned				N/A	28.85										
		ODUF: Data Transmission (CONNECT:DIRECT), per message				N/A	0.0000434										
	CENTRALIZED MESSAGE DISTRIBUTION SERVICE (CMDS)																
		CMDS: Message Processing, per message				N/A	0.004										
		CMDS: Data Transmission (CONNECT:DIRECT), per message				N/A	0.001										
	ENHANCED OPTIONAL DAILY USAGE FILE (EODUF)																
		EODUF: Message Processing, per message				N/A	0.0034555										
	Notes: If no rate is identified in the contract, the rate for the specific service or function will be as set forth in applicable BellSouth tariff or as negotiated by the Parties upon request by either Party.																

ODUF/ADUF/EODUF/CMDS - Kentucky														Attachment: 7		Exhibit: A	
CATEGORY		RATE ELEMENTS	Interim	Zone	BCS	USOC	RATES ($)					Svc Order Submitted Elec per LSR	Svc Order Submitted Manually per LSR	Incremental Charge - Manual Svc Order vs. Electronic-1st	Incremental Charge - Manual Svc Order vs. Electronic-Add'l	Incremental Charge - Manual Svc Order vs. Electronic-Disc 1st	Incremental Charge - Manual Svc Order vs. Electronic-Disc Add'l
							Rec	Nonrecurring		Nonrecurring Disconnect		OSS Rates ($)					
								First	Add'l	First	Add'l	SOMEC	SOMAN	SOMAN	SOMAN	SOMAN	SOMAN
ODUF/ADUF/OEDUF/CMDS																	
	ACCESS DAILY USAGE FILE (ADUF)																
		ADUF: Message Processing, per message				N/A	0.001857										
		ADUF: Data Transmission (CONNECT:DIRECT), per message				N/A	0.0001245										
	OPTIONAL DAILY USAGE FILE (ODUF)																
		ODUF: Recording, per message				N/A	0.0000136										
		ODUF: Message Processing, per message				N/A	0.002506										
		ODUF: Message Processing, per Magnetic Tape provisioned				N/A	35.90										
		ODUF: Data Transmission (CONNECT:DIRECT), per message				N/A	0.00010372										
	CENTRALIZED MESSAGE DISTRIBUTION SERVICE (CMDS)																
		CMDS: Message Processing, per message				N/A	0.004										
		CMDS: Data Transmission (CONNECT:DIRECT), per message				N/A	0.001										
	ENHANCED OPTIONAL DAILY USAGE FILE (EODUF)																
		EODUF: Message Processing, per message				N/A	0.235889										
	Notes: If no rate is identified in the contract, the rate for the specific service or function will be as set forth in applicable BellSouth tariff or as negotiated by the Parties upon request by either Party.																

ODUF/ADUF/EODUF/CMDS - Louisiana														Attachment: 7		Exhibit: A	
CATEGORY		RATE ELEMENTS	Interim	Zone	BCS	USOC	RATES ($)					Svc Order Submitted Elec per LSR	Svc Order Submitted Manually per LSR	Incremental Charge - Manual Svc Order vs. Electronic-1st	Incremental Charge - Manual Svc Order vs. Electronic-Add'l	Incremental Charge - Manual Svc Order vs. Electronic-Disc 1st	Incremental Charge - Manual Svc Order vs. Electronic-Disc Add'l
							Rec	Nonrecurring		Nonrecurring Disconnect		OSS Rates ($)					
								First	Add'l	First	Add'l	SOMEC	SOMAN	SOMAN	SOMAN	SOMAN	SOMAN
ODUF/ADUF/OEDUF/CMDS																	
	ACCESS DAILY USAGE FILE (ADUF)																
		ADUF: Message Processing, per message				N/A	0.007983										
		ADUF: Data Transmission (CONNECT:DIRECT), per message				N/A	0.00012681										
	OPTIONAL DAILY USAGE FILE (ODUF)																
		ODUF: Recording, per message				N/A	0.0000117										
		ODUF: Message Processing, per message				N/A	0.004641										
		ODUF: Message Processing, per Magnetic Tape provisioned				N/A	48.45										
		ODUF: Data Transmission (CONNECT:DIRECT), per message				N/A	0.00010568										
	CENTRALIZED MESSAGE DISTRIBUTION SERVICE (CMDS)																
		CMDS: Message Processing, per message				N/A	0.004										
		CMDS: Data Transmission (CONNECT:DIRECT), per message				N/A	0.001										
	ENHANCED OPTIONAL DAILY USAGE FILE (EODUF)																
		EODUF: Message Processing, per message				N/A	0.250015										
	Notes: If no rate is identified in the contract, the rate for the specific service or function will be as set forth in applicable BellSouth tariff or as negotiated by the Parties upon request by either Party.																

ODUF/ADUF/EODUF/CMDS - Mississippi														Attachment: 7		Exhibit: A	
CATEGORY		RATE ELEMENTS	Interim	Zone	BCS	USOC	RATES ($)					Svc Order Submitted Elec per LSR	Svc Order Submitted Manually per LSR	Incremental Charge - Manual Svc Order vs. Electronic-1st	Incremental Charge - Manual Svc Order vs. Electronic-Add'l	Incremental Charge - Manual Svc Order vs. Electronic-Disc 1st	Incremental Charge - Manual Svc Order vs. Electronic-Disc Add'l
							Rec	Nonrecurring		Nonrecurring Disconnect		OSS Rates ($)					
								First	Add'l	First	Add'l	SOMEC	SOMAN	SOMAN	SOMAN	SOMAN	SOMAN
ODUF/ADUF/OEDUF/CMDS																	
	ACCESS DAILY USAGE FILE (ADUF)																
		ADUF: Message Processing, per message				N/A	0.008087										
		ADUF: Data Transmission (CONNECT:DIRECT), per message				N/A	0.00012803										
	OPTIONAL DAILY USAGE FILE (ODUF)																
		ODUF: Recording, per message				N/A	0.0000063										
		ODUF: Message Processing, per message				N/A	0.004707										
		ODUF: Message Processing, per Magnetic Tape provisioned				N/A	49.04										
		ODUF: Data Transmission (CONNECT:DIRECT), per message				N/A	0.00010669										
	CENTRALIZED MESSAGE DISTRIBUTION SERVICE (CMDS)																
		CMDS: Message Processing, per message				N/A	0.004										
		CMDS: Data Transmission (CONNECT:DIRECT), per message				N/A	0.001										
	ENHANCED OPTIONAL DAILY USAGE FILE (EODUF)																
		EODUF: Message Processing, per message				N/A	0.250424										
	Notes: If no rate is identified in the contract, the rate for the specific service or function will be as set forth in applicable BellSouth tariff or as negotiated by the Parties upon request by either Party.																

ODUF/ADUF/EODUF/CMDS - North Carolina														Attachment: 7		Exhibit: A	
CATEGORY		RATE ELEMENTS	Interim	Zone	BCS	USOC	RATES ($)					Svc Order Submitted Elec per LSR	Svc Order Submitted Manually per LSR	Incremental Charge - Manual Svc Order vs. Electronic-1st	Incremental Charge - Manual Svc Order vs. Electronic-Add'l	Incremental Charge - Manual Svc Order vs. Electronic-Disc 1st	Incremental Charge - Manual Svc Order vs. Electronic-Disc Add'l
							Rec	Nonrecurring		Nonrecurring Disconnect		OSS Rates ($)					
								First	Add'l	First	Add'l	SOMEC	SOMAN	SOMAN	SOMAN	SOMAN	SOMAN
ODUF/ADUF/OEDUF/CMDS																	
	ACCESS DAILY USAGE FILE (ADUF)																
		ADUF: Message Processing, per message				N/A	0.01435										
		ADUF: Data Transmission (CONNECT:DIRECT), per message				N/A	0.0001277										
	OPTIONAL DAILY USAGE FILE (ODUF)																
		ODUF: Recording, per message				N/A	0.0003										
		ODUF: Message Processing, per message				N/A	0.0032										
		ODUF: Message Processing, per Magnetic Tape provisioned				N/A	54.61										
		ODUF: Data Transmission (CONNECT:DIRECT), per message				N/A	0.00004										
	CENTRALIZED MESSAGE DISTRIBUTION SERVICE (CMDS)																
		CMDS: Message Processing, per message				N/A	0.004										
		CMDS: Data Transmission (CONNECT:DIRECT), per message				N/A	0.001										
	ENHANCED OPTIONAL DAILY USAGE FILE (EODUF)																
		EODUF: Message Processing, per message				N/A	0.2285406										
	Notes: If no rate is identified in the contract, the rate for the specific service or function will be as set forth in applicable BellSouth tariff or as negotiated by the Parties upon request by either Party.																

ODUF/ADUF/EODUF/CMDS - South Carolina														Attachment: 7		Exhibit: A	
CATEGORY		RATE ELEMENTS	Interim	Zone	BCS	USOC	RATES ($)					Svc Order Submitted Elec per LSR	Svc Order Submitted Manually per LSR	Incremental Charge - Manual Svc Order vs. Electronic-1st	Incremental Charge - Manual Svc Order vs. Electronic-Add'l	Incremental Charge - Manual Svc Order vs. Electronic-Disc 1st	Incremental Charge - Manual Svc Order vs. Electronic-Disc Add'l
							Rec	Nonrecurring		Nonrecurring Disconnect		OSS Rates ($)					
								First	Add'l	First	Add'l	SOMEC	SOMAN	SOMAN	SOMAN	SOMAN	SOMAN
ODUF/ADUF/OEDUF/CMDS																	
	ACCESS DAILY USAGE FILE (ADUF)																
		ADUF: Message Processing, per message				N/A	0.008061										
		ADUF: Data Transmission (CONNECT:DIRECT), per message				N/A	0.00013036										
	OPTIONAL DAILY USAGE FILE (ODUF)																
		ODUF: Recording, per message				N/A	0.0000216										
		ODUF: Message Processing, per message				N/A	0.004704										
		ODUF: Message Processing, per Magnetic Tape provisioned				N/A	48.87										
		ODUF: Data Transmission (CONNECT:DIRECT), per message				N/A	0.00010863										
	CENTRALIZED MESSAGE DISTRIBUTION SERVICE (CMDS)																
		CMDS: Message Processing, per message				N/A	0.004										
		CMDS: Data Transmission (CONNECT:DIRECT), per message				N/A	0.001										
	ENHANCED OPTIONAL DAILY USAGE FILE (EODUF)																
		EODUF: Message Processing, per message				N/A	0.258301										
	Notes: If no rate is identified in the contract, the rate for the specific service or function will be as set forth in applicable BellSouth tariff or as negotiated by the Parties upon request by either Party.																

ODUF/ADUF/EODUF/CMDS - Tennessee														Attachment: 7		Exhibit: A	
CATEGORY		RATE ELEMENTS	Interim	Zone	BCS	USOC	RATES ($)					Svc Order Submitted Elec per LSR	Svc Order Submitted Manually per LSR	Incremental Charge - Manual Svc Order vs. Electronic-1st	Incremental Charge - Manual Svc Order vs. Electronic-Add'l	Incremental Charge - Manual Svc Order vs. Electronic-Disc 1st	Incremental Charge - Manual Svc Order vs. Electronic-Disc Add'l
							Rec	Nonrecurring		Nonrecurring Disconnect		OSS Rates ($)					
								First	Add'l	First	Add'l	SOMEC	SOMAN	SOMAN	SOMAN	SOMAN	SOMAN
ODUF/ADUF/OEDUF/CMDS																	
	ACCESS DAILY USAGE FILE (ADUF)																
		ADUF: Message Processing, per message				N/A	0.004										
		ADUF: Data Transmission (CONNECT:DIRECT), per message				N/A	0.001										
	OPTIONAL DAILY USAGE FILE (ODUF)																
		ODUF: Recording, per message				N/A	0.0000044										
		ODUF: Message Processing, per message				N/A	0.0027366										
		ODUF: Message Processing, per Magnetic Tape provisioned				N/A	52.75										
		ODUF: Data Transmission (CONNECT:DIRECT), per message				N/A	0.0000339										
	CENTRALIZED MESSAGE DISTRIBUTION SERVICE (CMDS)																
		CMDS: Message Processing, per message				N/A	0.004										
		CMDS: Data Transmission (CONNECT:DIRECT), per message				N/A	0.001										
	ENHANCED OPTIONAL DAILY USAGE FILE (EODUF)																
		EODUF: Message Processing, per message				N/A	0.004										
	Notes: If no rate is identified in the contract, the rate for the specific service or function will be as set forth in applicable BellSouth tariff or as negotiated by the Parties upon request by either Party.																

Attachment 8

Rights-of-Way, Conduits and Pole Attachments

Rights-of-Way, Conduits and Pole Attachments

BellSouth will provide nondiscriminatory access to any pole, duct, conduit, or right-of-way owned or controlled by BellSouth pursuant to 47 U.S.C. § 224, as amended by the Act, pursuant to terms and conditions of a license agreement subsequently negotiated with BellSouth's Competitive Structure Provisioning Center.

Attachment 9

Performance Measurements

PERFORMANCE MEASUREMENTS

Upon a particular Commission's issuance of an Order pertaining to Performance Measurements in a proceeding expressly applicable to all CLECs generally, BellSouth shall implement in that state such Performance Measurements as of the date specified by the Commission. Performance Measurements that have been Ordered in a particular state can currently be accessed via the internet at https://pmap.bellsouth.com. At the request of the Tennessee Regulatory Authority (TRA), the following Regional Service Quality Measurements (SQM) plan is being included as the performance measurements currently in place for the state of Tennessee. At such time that the TRA issues an Order pertaining to Performance Measurements, such Performance Measurements shall supersede the Regional SQM contained in the Agreement.

BellSouth Service Quality Measurement Plan (SQM)

Region Performance Metrics

Measurement Descriptions
Version 0.06

Issue Date: June 4, 2002

Introduction

The BellSouth Service Quality Measurement Plan (SQM) describes in detail the measurements produced to evaluate the quality of service delivered to BellSouth's customers both wholesale and retail. The SQM was developed to respond to the requirements of the Communications Act of 1996 Section 251 (96 Act) which required BellSouth to provide non-discriminatory access to Competitive Local Exchange Carriers (CLEC)[1] and its Retail Customers. The reports produced by the SQM provide regulators, CLECs and BellSouth the information necessary to monitor the delivery of non-discriminatory access.

This plan results from the many divergent forces evolving from the 96 Act. The 96 Act, the Georgia Public Service Commission (GPSC) Order (Docket 7892-U 12/30/97), LCUG 1-7.0, the FCC's NPRM (CC Docket 98-56 RM9101 04/17/98), the Louisiana Public Service Commission (LPSC) Order (Docket U-22252 Subdocket C 04/19/98), numerous arbitration cases, LPSC sponsored collaborative workshops (10/98-02/00), and proceedings in Alabama, Mississippi, and North Carolina have and continue to influence the SQM.

The SQM and the reports flowing from it must change to reflect the dynamic requirements of the industry. New measurements are added as new products, systems, and processes are developed and fielded. New products and services are added as the markets for them develop and the processes stabilize. The measurements are also changed to reflect changes in systems, correct errors, and respond to both 3rd Party audit requirements and Commission requirements.

This document is intended for use by someone with knowledge of telecommunications industry, information technologies and a functional knowledge of the subject areas covered by the BellSouth Performance Measurements and the reports that flow from them.

Once it is approved, the most current copy of this document can be found on the web at URL: https://pmap.bellsouth.com in the Documentation Downloads folder.

Report Publication Dates

Each month, preliminary SQM reports will be posted to BellSouth's SQM web site (https://www.pmap.bellsouth.com) by 8:00 A.M. EST on the 21st day of each month or the first business day after the 21st. Final validated SQM reports will be posted by 8:00 A.M. on the last day of the month. Reports not posted by this time will be considered late for SEEM payment purposes. SEEM reports will posted on the 15th of the following month. Payments due will also be paid on the 15th of the following month. For instance: May data will be posted in preliminary SQM reports on June 21. Final validated SQM reports will be posted on the last day of June. Final validated SEEM reports will be posted and payments mailed on July 15th. In the event the 15th falls on a weekend or holiday, reports and payments will be posted/made the next business day.

---

[1] *Alternative Local Exchange Companies (ALEC) and Competing Local Providers (CLP) are referred to as Competitive Local Exchange Carriers (CLEC) in this document.*

Report Delivery Methods

CLEC SQM and SEEM reports will be considered delivered when posted to the web site. Commissions will be given access to the web site. In addition, a copy of the Monthly State Summary reports will be filed with the appropriate Commissions as soon as possible after the last day of each month.

Document Number: RGN-V005-122101

Contents

Section 1: Operations Support Systems (OSS) 1-1
OSS-1: Average Response Time and Response Interval (Pre-Ordering/ Ordering) 1-1
OSS-2: Interface Availability (Pre-Ordering/Ordering) 1-5
OSS-3: Interface Availability (Maintenance & Repair) 1-7
OSS-4: Response Interval (Maintenance & Repair) 1-9
PO-1: Loop Makeup - Response Time – Manual 1-11
PO-2: Loop Make Up - Response Time - Electronic 1-13

Section 2: Ordering 2-1
O-1: Acknowledgement Message Timeliness 2-1
O-2: Acknowledgement Message Completeness 2-3
O-3: Percent Flow-Through Service Requests (Summary) 2-4
O-4: Percent Flow-Through Service Requests (Detail) 2-6
O-5: Flow-Through Error Analysis 2-9
O-6: CLEC LSR Information 2-10
LSR Flow Through Matrix 2-11
O-7: Percent Rejected Service Requests 2-14
O-8: Reject Interval 2-16
O-9: Firm Order Confirmation Timeliness 2-19
O-10: Service Inquiry with LSR Firm Order Confirmation (FOC) Response Time Manual 2-22
O-11: Firm Order Confirmation and Reject Response Completeness 2-24
O-12: Speed of Answer in Ordering Center 2-26
O-13: LNP-Percent Rejected Service Requests 2-27
O-14: LNP-Reject Interval Distribution & Average Reject Interval 2-29
O-15: LNP-Firm Order Confirmation Timeliness Interval Distribution & Firm Order Confirmation Average Interval 2-32

Section 3: Provisioning 3-1
P-1: Mean Held Order Interval & Distribution Intervals 3-1
P-2: Average Jeopardy Notice Interval & Percentage of Orders Given Jeopardy Notices 3-3
P-3: Percent Missed Installation Appointments 3-5
P-4: Average Completion Interval (OCI) & Order Completion Interval Distribution 3-8
P-5: Average Completion Notice Interval 3-11
P-6: % Completions/Attempts without Notice or < 24 hours Notice 3-13
P-7: Coordinated Customer Conversions Interval 3-15
P-7A: Coordinated Customer Conversions – Hot Cut Timeliness% Within Interval and Average Interval 3-17
P-7B: Coordinated Customer Conversions – Average Recovery Time 3-19
P-7C: Hot Cut Conversions - % Provisioning Troubles Received Within 7 days of a completed Service Order 3-21
P-8: Cooperative Acceptance Testing - % of xDSL Loops Tested 3-23
P-9: % Provisioning Troubles within 30 days of Service Order Completion 3-25
P-10: Total Service Order Cycle Time (TSOCT) 3-28
P-11: Service Order Accuracy 3-30
P-12: LNP-Percent Missed Installation Appointments 3-32
P-13: LNP-Average Disconnect Timeliness Interval & Disconnect Timeliness Interval Distribution

.....3-34
P-14: LNP-Total Service Order Cycle Time (TSOCT).....3-36

Section 4: Section 4: Maintenance & Repair.....4-1
M&R-1: Missed Repair Appointments.....4-1
M&R-2: Customer Trouble Report Rate.....4-3
M&R-3: Maintenance Average Duration.....4-5
M&R-4: Percent Repeat Troubles within 30 Days.....4-7
M&R-5: Out of Service (OOS) > 24 Hours.....4-9
M&R-6: Average Answer Time – Repair Centers.....4-11
M&R-7: Mean Time To Notify CLEC of Network Outages.....4-12

Section 5: Billing.....5-1
B-1: Invoice Accuracy.....5-1
B2: Mean Time to Deliver Invoices.....5-3
B3: Usage Data Delivery Accuracy.....5-5
B4: Usage Data Delivery Completeness.....5-6
B5: Usage Data Delivery Timeliness.....5-7
B6: Mean Time to Deliver Usage.....5-8
B7: Recurring Charge Completeness.....5-9
B8: Non-Recurring Charge Completeness.....5-10

Section 6: Operator Services And Directory Assistance.....6-1
OS-1: Speed to Answer Performance/Average Speed to Answer - Toll.....6-1
OS-2: Speed to Answer Performance/Percent Answered with “X” Seconds - Toll.....6-2
DA-1: Speed to Answer Performance/Average Speed to Answer - Directory Assistance (DA).....6-3
DA-2: Speed to Answer Performance/Percent Answered within “X” Seconds - Directory Assistance (DA).....6-4

Section 7: Database Update Information.....7-1
D-1: Average Database Update Interval.....7-1
D-2: Percent Database Update Accuracy.....7-3
D-3: Percent NXXs and LRNs Loaded by the LERG Effective Date.....7-5

Section 8: E911.....8-1
E-1: Timeliness.....8-1
E-2: Accuracy.....8-2
E-3: Mean Interval.....8-3

Section 9: Trunk Group Performance.....9-1
TGP-1: Trunk Group Performance-Aggregate.....9-1
TGP-2: Trunk Group Performance-CLEC Specific.....9-3

Section 10: Collocation.....10-1
C-1: Collocation Average Response Time.....10-1
C-2: Collocation Average Arrangement Time.....10-2
C-3: Collocation Percent of Due Dates Missed.....10-3

Section 11: Change Management.....11-4
CM-1: Timeliness of Change Management Notices.....11-4
CM-2: Change Management Notice Average Delay Days.....11-5

CM-3: Timeliness of Documents Associated with Change 11-6
CM-4: Change Management Documentation Average Delay Days 11-7
CM-5: Notification of CLEC Interface Outages 11-8

Section 12: Bona Fide / New Business Request Process 12-1
BFR-1: Percentage of BFR/NBR Requests Processed Within 30 Business Days 12-1
BFR-2: Percentage of Quotes Provided for Authorized BFR/NBR Requests Processed Within X (10/30/60) Business Days 12-2

Appendix A: Reporting Scope 1
A-1: Standard Service Groupings 1
A-2: Standard Service Order Activities 1

Appendix B: Glossary of Acronyms and Terms 1

Appendix C: BellSouth Audit Policy 1

Section 1: Operations Support Systems (OSS)

OSS-1: Average Response Time and Response Interval (Pre-Ordering/ Ordering)

Definition

Average response time and response intervals are the average times and number of requests responded to within certain intervals for accessing legacy data associated with appointment scheduling, service & feature availability, address verification, request for Telephone numbers (TNs), and Customer Service Records (CSRs).

Exclusions

None

Business Rules

The average response time for retrieving pre-order/order information from a given legacy system is determined by summing the response times for all requests submitted to the legacy systems during the reporting period and dividing by the total number of legacy system requests for that month.

The response interval starts when the client application (LENS or TAG for CLECs and RNS or ROS for BellSouth) submits a request to the legacy system and ends when the appropriate response is returned to the client application. The number of accesses to the legacy systems during the reporting period which take less than 2.3 seconds, the number of accesses which take more than 6 seconds, and the number which are less than or equal to 6.3 seconds are also captured.

Calculation

Response Time = (a - b)

- a = Date & Time of Legacy Response
- b = Date & Time of Legacy Request

Average Response Time = c / d

- c = Sum of Response Times
- d = Number of Legacy Requests During the Reporting Period

Report Structure

- Not CLEC Specific
- Not Product/Service Specific
- Regional Level

Data Retained

Relating to CLEC Experience	Relating to BellSouth Performance
• Report Month • Legacy Contract (per reporting dimension) • Response Interval • Regional Scope	• Report Month • Legacy Contract (per reporting dimension) • Response Interval • Regional Scope

SQM Disaggregation - Analog/Benchmark

SQM Level of Disaggregation	SQM Analog/Benchmark
• **RSAG – Address** (Regional Street Address Guide-Address) – stores street address information used to validate customer addresses. CLECs and BellSouth query this legacy system. • **RSAG – TN** (Regional Street Address Guide-Telephone number) – contains information about facilities available and telephone numbers working at a given address.	

CLECs and BellSouth query this legacy system. • **ATLAS** (Application for Telephone Number Load Administration and Selection) – acts as a warehouse for storing telephone numbers that are available for assignment by the system. It enables CLECs and BellSouth service reps to select and reserve telephone numbers. CLECs and BellSouth query this legacy system. • **COFFI** (Central Office Feature File Interface) – stores information about product and service offerings and availability. CLECs query this legacy system. • **DSAP** (DOE Support Application) – provides due date information. CLECs and BellSouth query this legacy system. • **HAL/CRIS** (Hands-Off Assignment Logic/Customer Record Information System) – a system used to access the Business Office Customer Record Information System (BOCRIS). It allows BellSouth servers, including LENS, access to legacy systems. CLECs query this legacy system. • **P/SIMS** (Product/Services Inventory Management system) – provides information on capacity, tariffs, inventory and service availability. CLECs query this legacy system. • **OASIS** (Obtain Available Services Information Systems) – Information on feature and rate availability. BellSouth queries this legacy system.	

Table 1: Legacy System Access Times For RNS

System	Contract	Data	< 2.3 sec.	> 6 sec.	<= 6.3 sec.	Avg. Sec.	# of Calls
RSAG	RSAG-TN	Address	x	x	x	x	x
RSAG	RSAG-ADDR	Address	x	x	x	x	x
ATLAS	ATLAS-TN	TN	x	x	x	x	x
DSAP	DSAP	Schedule	x	x	x	x	x
CRIS	CRSACCTS	CSR	x	x	x	x	x
OASIS	OASISCAR	Feature/Service	x	x	x	x	x
OASIS	OASISLPC	Feature/Service	x	x	x	x	x
OASIS	OASISMTN	Feature/Service	x	x	x	x	x
OASIS	OASISBIG	Feature/Service	x	x	x	x	x

Table 2: Legacy System Access Times For R0S

System	Contract	Data	< 2.3 sec.	> 6 sec.	<= 6.3 sec.	Avg. sec.	# of Calls
RSAG	RSAG-TN	Address	x	x	x	x	x
RSAG	RSAG-ADDR	Address	x	x	x	x	x
ATLAS	ATLAS-TN	TN	x	x	x	x	x
DSAP	DSAP	Schedule	x	x	x	x	x
CRIS	CRSOCSR	CSR	x	x	x	x	x
OASIS	OASISBIG	Feature/Service	x	x	x	x	x

Table 3: Legacy System Access Times For LENS

System	Contract	Data	< 2.3 sec.	> 6 sec.	<6.3 sec.	Avg. sec.	# of Calls
RSAG	RSAG-TN	Address	x	x	x	x	x
RSAG	RSAG-ADDR	Address	x	x	x	x	x
ATLAS	ATLAS-TN	TN	x	x	x	x	x
DSAP	DSAP	Schedule	x	x	x	x	x
HAL	HAL/CRIS	CSR	x	x	x	x	x
COFFI	COFFI/USOC	Feature/Service	x	x	x	x	x
P/SIMS	PSIMS/ORB	Feature/Service	x	x	x	x	x

Table 4: Legacy System Access Times For TAG

System	Contract	Data	< 2.3 sec.	> 6 sec.	<6.3 sec.	Avg. sec.	# of Calls
RSAG	RSAG-TN	Address	x	x	x	x	x
RSAG	RSAG-ADDR	Address	x	x	x	x	x
ATLAS	ATLAS-TN	TN	x	x	x	x	x
ATLAS	ATLAS-MLH	TN	x	x	x	x	x
ATLAS	ATLAS-DID	TN	x	x	x	x	x
DSAP	DSAP	Schedule	x	x	x	x	x
CRIS	CRSECSRL	CSR	x	x	x	x	x
CRIS	CRSECSR	CSR	x	x	x	x	x

SEEM Measure

SEEM Measure		
Yes	Tier I	
	Tier II	X

Note: CLEC specific data is not available in this measure. Queries of this sort do not have company specific signatures.

SEEM Disaggregation - Analog/Benchmark

SEEM Disaggregation	SEEM Analog/Benchmark
• **RSAG – Address** (Regional Street Address Guide-Address) – stores street address information used to validate customer addresses. CLECs and BellSouth query this legacy system. • **RSAG – TN** (Regional Street Address Guide-Telephone number) – contains information about facilities available and telephone numbers working at a given address. CLECs and BellSouth query this legacy system. • **ATLAS** (Application for Telephone Number Load Administration and Selection) – acts as a warehouse for storing telephone numbers that are available for assignment by the system. It enables CLECs and BellSouth service reps to select and reserve telephone numbers. CLECs and BellSouth query this legacy system. • **COFFI** (Central Office Feature File Interface) – stores information about product and service offerings and availability. CLECs query this legacy system. • **DSAP** (DOE Support Application) – provides due date information. CLECs and BellSouth query this legacy system. • **HAL/CRIS** (Hands-Off Assignment Logic/Customer Record Information System) – a system used to access the	• Percent Response Received within 6.3 seconds: > 95% • Parity + 2 seconds

Business Office Customer Record Information System (BOCRIS). It allows BellSouth servers, including LENS, access to legacy systems. CLECs query this legacy system. • **P/SIMS** (Product/Services Inventory Management system) – provides information on capacity, tariffs, inventory and service availability. CLECs query this legacy system. • **OASIS** (Obtain Available Services Information Systems) – Information on feature and rate availability. BellSouth queries this legacy system.	

SEEM OSS Legacy Systems

System	BellSouth	CLEC
Telephone Number/Address		
RSAG-ADDR	RNS, ROS	TAG, LENS
RSAG-TN	RNS, ROS	TAG, LENS
ATLAS	RNS,ROS	TAG. LENS
Appointment Scheduling		
DSAP	RNS, ROS	TAG, LENS
CSR Data		
CRSACCTS	RNS	
CRSOCSR	ROS	
HAL/CRIS		LENS
CRSECSRL		TAG
CRSECSR		TAG
Service/Feature Availability		
OASISBIG	RNS, ROS	
PSIMS/ORB		LENS

OSS-2: Interface Availability (Pre-Ordering/Ordering)

Definition

Percent of time applications are functionally available as compared to scheduled availability. Calculations are based upon availability of applications and interfacing applications utilized by CLECs for pre-ordering and ordering. “Functional Availability” is defined as the number of hours in the reporting period that the applications/interfaces are available to users. “Scheduled Availability” is defined as the number of hours in the reporting period that the applications/interfaces are scheduled to be available.

Scheduled availability is posted on the Interconnection web site: (www.interconnection.bellsouth.com/oss/oss_hour.html)

Exclusions

- CLEC-impacting troubles caused by factors outside of BellSouth's purview, e.g., troubles in customer equipment, troubles in networks owned by telecommunications companies other than BellSouth, etc.
- Degraded service, e.g., slow response time, loss of non-critical functionality, etc.

Business Rules

This measurement captures the functional availability of applications/interfaces as a percentage of scheduled availability for the same systems. Only full outages are included in the calculations for this measure. Full outages are defined as occurrences of either of the following:

- Application/interfacing application is down or totally inoperative.
- Application is totally inoperative for customers attempting to access or use the application. This includes transport outages when they may be directly associated with a specific application.

Comparison to an internal benchmark provides a vehicle for determining whether or not CLECs and retail BST entities are given comparable opportunities for use of pre-ordering and ordering systems.

Calculation

Interface Availability (Pre-Ordering/Ordering) = (a / b) X 100

- a = Functional Availability
- b = Scheduled Availability

Report Structure

- Not CLEC Specific
- Not Product/Service Specific
- Regional Level

Data Retained

Relating to CLEC Experience	Relating to BellSouth Performance
• Report Month • Legacy Contract Type (per reporting dimension) • Regional Scope • Hours of Downtime	• Report Month • Legacy Contract Type (per reporting dimension) • Regional Scope • Hours of Downtime

SQM Disaggregation - Analog/Benchmark

SQM Level of Disaggregation	SQM Analog/Benchmark
• Regional Level	• >= 99.5%

OSS Interface Availability

Application	Applicable to	% Availability
EDI	CLEC	x
TAG	CLEC	x
LENS	CLEC	x
LEO	CLEC	x
LESOG	CLEC	x
LNP Gateway	CLEC	x
COG	CLEC	Under Development
SOG	CLEC	Under Development
DOM	CLEC	Under Development
DOE	CLEC/BellSouth	x
SONGS	CLEC/BellSouth	x
ATLAS/COFFI	CLEC/BellSouth	x
BOCRIS	CLEC/BellSouth	x
DSAP	CLEC/BellSouth	x
RSAG	CLEC/BellSouth	x
SOCS	CLEC/BellSouth	x
CRIS	CLEC/BellSouth	x

SEEM Measure

SEEM Measure		
Yes	Tier I	
	Tier II	X

SEEM Disaggregation - Analog/Benchmark

SEEM Disaggregation	SEEM Analog/Benchmark
• Regional Level	• >= 99.5%

SEEM OSS Interface Availability

Application	Applicable to	% Availability
EDI	CLEC	x
HAL	CLEC	x
LENS	CLEC	x
LEO Mainframe	CLEC	x
LESOG	CLEC	x
PSIMS	CLEC	x
TAG	CLEC	x

OSS-3: Interface Availability (Maintenance & Repair)

Definition

Percent of time applications are functionally available as compared to scheduled availability. Calculations are based upon availability of applications and interfacing applications utilized by CLECs for maintenance and repair. “Functional Availability” is defined as the number of hours in the reporting period that the applications/interfaces are available to users. “Scheduled Availability” is defined as the number of hours in the reporting period that the applications/interfaces are scheduled to be available.

Scheduled availability is posted on the Interconnection web site: (www.interconnection.bellsouth.com/oss/oss_hour.html)

Exclusions

- CLEC-impacting troubles caused by factors outside of BellSouth's purview, e.g., troubles in customer equipment, troubles in networks owned by telecommunications companies other than BellSouth, etc.
- Degraded service, e.g., slow response time, loss of non-critical functionality, etc.

Business Rules

This measurement captures the functional availability of applications/interfaces as a percentage of scheduled availability for the same systems. Only full outages are included in the calculations for this measure. Full outages are defined as occurrences of either of the following:

- Application/interfacing application is down or totally inoperative.
- Application is totally inoperative for customers attempting to access or use the application. This includes transport outages when they may be directly associated with a specific application.

Comparison to an internal benchmark provides a vehicle for determining whether or not CLECs and retail BST entities are given comparable opportunities for use of maintenance and repair systems.

Calculation

OSS Interface Availability (a / b) X 100

- a = Functional Availability
- b = Scheduled Availability

Report Structure

- Not CLEC Specific
- Not Product/Service Specific
- Regional Level

Data Retained

Relating to CLEC Experience	Relating to BellSouth Performance
• Availability of CLEC TAFI • Availability of LMOS HOST, MARCH, SOCS, CRIS, PREDICTOR, LNP and OSPCM • ECTA	• Availability of BellSouth TAFI • Availability of LMOS HOST, MARCH, SOCS, CRIS, PREDICTOR, LNP and OSPCM

SQM Disaggregation - Analog/Benchmark

SQM Level of Disaggregation	SQM Analog/Benchmark
• Regional Level	• >= 99.5%

OSS Interface Availability (M&R)

OSS Interface	% Availability
BST TAFI	x
CLEC TAFI	x
CLEC ECTA	x
BellSouth & CLEC	x
CRIS	x
LMOS HOST	x
LNP	x
MARCH	x
OSPCM	x
PREDICTOR	x
SOCS	x

SEEM Measure

SEEM Measure		
Yes	Tier I	
	Tier II	X

SEEM Disaggregation - Analog/Benchmark

SEEM Disaggregation	SEEM Analog/Benchmark
• Regional Level	• >= 99.5%

OSS Interface Availability (M&R)

OSS Interface	% Availability
CLEC TAFI	x
CLEC ECTA	x

OSS-4: Response Interval (Maintenance & Repair)

Definition

The response intervals are determined by subtracting the time a request is received on the BellSouth side of the interface from the time the response is received from the legacy system. Percentages of requests falling into each interval category are reported, along with the actual number of requests falling into those categories.

Exclusions

None

Business Rules

This measure is designed to monitor the time required for the CLEC and BellSouth interface system to obtain from BellSouth's legacy systems the information required to handle maintenance and repair functions. The clock starts on the date and time when the request is received on the BellSouth side of the interface and the clock stops when the response has been transmitted through that same point to the requester.

Note: The OSS Response Interval BellSouth Total Report is a combination of BellSouth Residence and Business Total.

Calculation

OSS Response Interval = (a - b)

- a = Query Response Date and Time
- b = Query Request Date and Time

Percent Response Interval (per category) = (c / d) X 100

- c = Number of Response Intervals in category "X"
- d = Number of Queries Submitted in the Reporting Period

where, "X" is <= 4, > 4 <= 10, <= 10, > 10, or > 30 seconds.

Report Structure

- Not CLEC Specific
- Not product/service specific
- Regional Level

Data Retained

Relating to CLEC Experience	Relating to BellSouth Performance
• CLEC Transaction Intervals	• BellSouth Business and Residential Transactions Intervals

SQM Disaggregation - Analog/Benchmark

SQM Level of Disaggregation	SQM Analog/Benchmark
• Regional Level	• Parity

Legacy System Access Times for M&R

System	BellSouth & CLEC	Count				
		<= 4	> 4 <= 10	<= 10	> 10	> 30
CRIS	x	x	x	x	x	x
DLETH	x	x	x	x	x	x
DLR	x	x	x	x	x	x
LMOS	x	x	x	x	x	x
LMOSupd	x	x	x	x	x	x
LNP	x	x	x	x	x	x
MARCH	x	x	x	x	x	x
OSPCM	x	x	x	x	x	x
Predictor	x	x	x	x	x	x
SOCS	x	x	x	x	x	x
NIW	x	x	x	x	x	x

SEEM Measure

SEEM Measure		
No	Tier I	
	Tier II	

SEEM Disaggregation - Analog/Benchmark

SEEM Disaggregation	SEEM Analog/Benchmark
• Not Applicable	• Not Applicable

PO-1: Loop Makeup - Response Time – Manual

Definition

This report measures the average interval and percent within the interval from the submission of a Manual Loop Makeup Service Inquiry (LMUSI) to the distribution of Loop Makeup information back to the CLEC.

Exclusions

- Inquiries, which are submitted electronically.
- Designated Holidays are excluded from the interval calculation.
- Weekend hours from 5:00PM Friday until 8:00AM Monday are excluded from the interval calculation.
- Canceled Inquiries.

Business Rules

The CLEC Manual Loop Makeup Service Inquiry (LMUSI) process includes inquiries submitted via mail or FAX to BellSouth's Complex Resale Support Group (CRSG).

This measurement combines three intervals:

1. From receipt of the Service Inquiry for Loop Makeup to hand off to the Service Advocacy Center (SAC) for "Look-up."
2. From SAC start date to SAC complete date.
3. From SAC complete date to date the Complex Resale Support Group (CRSG) distributes loop makeup information back to the CLEC.

The "Receive Date" is defined as the date the Manual LMUSI is received by the CRSG. It is counted as day Zero. LMU "Return Date" is defined as the date the LMU information is sent back to the CLEC from BellSouth. The interval calculation is reset to Zero when a CLEC initiated change occurs on the Manual LMU request.

Note: The Loop Make Up Service Inquiry Form does not require the CLEC to furnish the type of Loop. The CLEC determines whether the loop makeup will support the type of service they wish to order or not and qualifies the loop. If the loop makeup will support the service, a firm order LSR is submitted by the CLEC.

Calculation

Response Interval = (a - b)

- a = Date and Time LMUSI returned to CLEC
- b = Date and Time the LMUSI is received

Average Interval = (c / d)

- c = Sum of all Response Intervals
- d = Total Number of LMUSIs received within the reporting period

Percent within interval = (e / f) X 100

- e = Total LMUSIs received within the interval
- f = Total Number of LMUSIs processed within the reporting period

Report Structure

- CLEC Aggregate
- CLEC Specific
- Geographic Scope
  - State
  - Region
- Interval for manual LMUs:
  0 – <= 1 day
  >1 – <= 2 days
  >2 – <= 3 days
  0 - <= 3 days
  >3 – <= 6 days
  >6 – <= 10 days
  > 10 days
- Average Interval in days

Data Retained

Relating to CLEC Experience	Relating to BellSouth Performance
• Report Month • Total Number of Inquiries • SI Intervals • State and Region	• Not Applicable

SQM Disaggregation - Analog/Benchmark

SQM Level of Disaggregation	SQM Analog/Benchmark
• Loops	Benchmark • 95% <= 3 Business Days

SEEM Measure

SEEM Measure		
Yes	Tier I	X
	Tier II	X

SEEM Disaggregation - Analog/Benchmark

SEEM Disaggregation	SEEM Analog/Benchmark
• Loops	Benchmark • 95% <= 3 Business Days

PO-2: Loop Make Up - Response Time - Electronic

Definition

This report measures the average interval and the percent within the interval from the electronic submission of a Loop Makeup Service Inquiry (LMUSI) to the distribution of Loop Makeup information back to the CLEC.

Exclusions

- Manually submitted inquiries.
- Designated Holidays are excluded from the interval calculation.
- Canceled Requests.
- Scheduled OSS Maintenance.

Business Rules

The response interval starts when the CLEC's Mechanized Loop Makeup Service Inquiry (LMUSI) is submitted electronically through the Operational Support Systems interface, LENS, TAG or RoboTAG. It ends when BellSouth's Loop Facility Assignment and Control System (LFACS) responds electronically to the CLEC with the requested Loop Makeup data via LENS, TAG or RoboTAG Interfaces.

Note: The Loop Make Up Service Inquiry Form does not require the CLEC to furnish the type of Loop. The CLEC determines whether the loop makeup will support the type of service they wish to order or not and qualifies the loop. If the loop makeup will support the service, a firm order LSR is submitted by the CLEC. EDI is not a pre-ordering system, and, therefore, is not applicable in this measure.

Calculation

Response Interval = (a - b)

- a = Date and Time LMUSI returned to CLEC
- b = Date and Time the LMUSI is received

Average Interval = (c / d)

- c = Sum of all response intervals
- d = Total Number of LMUSIs received within the reporting period

Percent within interval = (e / f) X 100

- e = Total LMUSIs received within the interval
- f = Total Number of LMUSIs processed within the reporting period

Report Structure

- CLEC Aggregate
- CLEC Specific
- Geographic Scope
  - State
  - Region
- Interval for electronic LMUs:
  0 – <= 1 minute
  >1 – <= 5 minutes
  0 - <= 5 minutes
  > 5 – <= 8 minutes
  > 8 – <= 15 minutes
  > 15 minutes
- Average Interval in minutes

Data Retained

Relating to CLEC Experience	Relating to BellSouth Performance
• Report Month	• Not Applicable

• Legacy Contract • Response Interval • Regional Scope	

SQM Disaggregation - Analog/Benchmark

SQM Level of Disaggregation	SQM Analog/Benchmark
• Loops	Benchmark • 90% <= 5 Minutes (05/01/01) • 95% <= 1 Minute (08/01/01)

SEEM Measure

SEEM Measure		
Yes	Tier I	X
	Tier II	X

SEEM Disaggregation - Analog/Benchmark

SEEM Disaggregation	SEEM Analog/Benchmark
• Loop	• 90% <= 5 Minutes (05/01/01) • 95% <= 1 Minute (08/01/01)

Section 2: Ordering

O-1: Acknowledgement Message Timeliness

Definition

This measurement provides the response interval from the time an LSR or transmission (may contain multiple LSRs from one or more CLECs in multiple states) is electronically submitted via EDI or TAG respectively until an acknowledgement notice is sent by the system.

Exclusions

- Scheduled OSS Maintenance

Business Rules

The process includes EDI & TAG system functional acknowledgements for all messages/Local Service Requests (LSRs) which are electronically submitted by the CLEC. Users of EDI may package many LSRs into one transmission which will receive the acknowledgement message. EDI users may place multiple LSRs in one "envelope" requesting service in one or more states which will mask the identity of the state and CLEC. The start time is the receipt time of the message at BellSouth's side of the interface (gateway). The end time is when the acknowledgement is transmitted by BellSouth at BellSouth's side of the interface (gateway). If more than one CLEC uses the same ordering center (aggregator), an Acknowledgement Message will be returned to the "Aggregator". However, BellSouth will not be able to determine which specific CLEC or state this message represented.

Calculation

Response Interval = (a - b)

- a = Date and Time Acknowledgement Notices returned to CLEC
- b = Date and Time messages/LSRs electronically submitted by the CLEC via EDI or TAG respectively

Average Response Interval = (c / d)

- c = Sum of all Response Intervals
- d = Total number of electronically submitted messages/LSRs received, from CLECs via EDI or TAG respectively, in the Reporting Period.

Reporting Structure

- CLEC Aggregate
- CLEC Specific/Aggregator
- Geographic Scope
  - Region
- Electronically Submitted LSRs
  0 – <= 10 minutes
  >10 – <= 20 minutes
  >20 – <= 30 minutes
  0 – <= 30 minutes
  >30 – <= 45 minutes
  >45 – <= 60 minutes
  >60 – <= 120 minutes
  >120 minutes
- Average interval for electronically submitted messages/LSRs in minutes

Data Retained

Relating to CLEC Experience	Relating to BellSouth Performance
• Report Month • Record of Functional Acknowledgements	• Not Applicable

SQM Disaggregation - Analog/Benchmark

SQM Level of Disaggregation	SQM Analog/Benchmark
• EDI • TAG	• EDI - 90% <= 30 minutes (05/01/01) - 95% <= 30 minutes (08/01/01) • TAG – 95% <= 30 minutes

SEEM Measure

SEEM Measure		
Yes	Tier I	X
	Tier II	X

SEEM Disaggregation - Analog/Benchmark

SEEM Disaggregation	SEEM Analog/Benchmark
• EDI • TAG	• EDI - 90% <= 30 minutes (05/01/01) - 95% <= 30 minutes (08/01/01) • TAG – 95% <= 30 minutes

O-2: Acknowledgement Message Completeness

Definition

This measurement provides the percent of transmissions/LSRs received via EDI or TAG respectively, which are acknowledged electronically.

Exclusions

- Manually submitted LSRs
- Scheduled OSS Maintenance

Business Rules

EDI and TAG send Functional Acknowledgements for all transmissions/LSRs, which are electronically submitted by a CLEC. Users of EDI may package many LSRs from multiple states in one transmission. If more than one CLEC uses the same ordering center, an Acknowledgement Message will be returned to the "Aggregator", however, BellSouth will not be able to determine which specific CLEC this message represented. The Acknowledgement Message is returned prior to the determination of whether the transmission/ LSR will be partially mechanized or fully mechanized.

Calculation

Acknowledgement Completeness = (a / b) X 100

- a = Total number of Functional Acknowledgements returned in the reporting period for transmissions/LSRs electronically submitted by EDI or TAG respectively
- b = Total number of electronically submitted transmissions/LSRs received in the reporting period by EDI or TAG respectively

Report Structure

- CLEC Aggregate
- CLEC Specific/Aggregator
- Geographic Scope
  - Region

Note: The Order calls for Mechanized, Partially Mechanized, and Totally Mechanized, however, the Acknowledgement message is generated before the system recognizes whether this electronic transmission will be partially or fully mechanized.

Data Retained

Relating to CLEC Experience	Relating to BellSouth Performance
• Report Month • Record of Functional Acknowledgements	• Not Applicable

SQM Disaggregation - Analog/Benchmark

SQM Level of Disaggregation	SQM Analog/Benchmark
• EDI • TAG	• Benchmark: 100%

SEEM Measure

SEEM Measure		
Yes	Tier I	X
	Tier II	X

SEEM Disaggregation - Analog/Benchmark

SEEM Disaggregation	SEEM Analog/Benchmark
• EDI • TAG	• Benchmark: 100%

O-3: Percent Flow-Through Service Requests (Summary)

Definition

The percentage of Local Service Requests (LSR) and LNP Local Service Requests (LNP LSRs) submitted electronically via the CLEC mechanized ordering process that flow through and reach a status for a FOC to be issued, without manual intervention.

Exclusions

- Fatal Rejects
- Auto Clarification
- Manual Fallout
- CLEC System Fallout
- Scheduled OSS Maintenance

Business Rules

The CLEC mechanized ordering process includes all LSRs, including supplements (subsequent versions) which are submitted through one of the three gateway interfaces (TAG, EDI and LENS), that flow through and reach a status for a FOC to be issued, without manual intervention. These LSRs can be divided into two classes of service: Business and Residence, and two types of service: Resale, and Unbundled Network Elements (UNE). The CLEC mechanized ordering process does not include LSRs which are submitted manually (for example, fax and courier) or are not designed to flow through (for example, Manual Fallout.)

Definitions:

Fatal Rejects: Errors that prevent an LSR, submitted electronically by the CLEC, from being processed further. When an LSR is submitted by a CLEC, LEO/LNP Gateway will perform edit checks to ensure the data received is correctly formatted and complete. For example, if the PON field contains an invalid character, LEO/LNP Gateway will reject the LSR and the CLEC will receive a Fatal Reject.

Auto-Clarification: Clarifications that occur due to invalid data within the LSR. LESOG/LAUTO will perform data validity checks to ensure the data within the LSR is correct and valid. For example, if the address on the LSR is not valid according to RSAG, or if the LNP is not available for the NPA NXXX requested, the CLEC will receive an Auto-Clarification.

Manual Fallout: Planned Fallout that occur by design. Certain LSRs are designed to fallout of the Mechanized Order Process due to their complexity. These LSRs are manually processed by the LCSC. When a CLEC submits an LSR, LESOG/LAUTO will determine if the LSR should be forwarded to LCSC for manual handling. Following are the categories for Manual Fallout:

1. Complex*
2. Special pricing plans
3. Some Partial migrations
4. New telephone number not yet posted to BOCRIS
5. Pending order review required
6. CSR inaccuracies such as invalid or missing CSR data in CRIS
7. Expedites (requested by the CLEC)
8. Denials-restore and conversion, or disconnect and conver sion orders
9. Class of service invalid in certain states with some types of service
10. Low volume such as activity type “T” (move)
11. More than 25 business lines, or more than 15 loops
12. Transfer of calls option for the CLEC end users
13. Directory Listings (Indentions and Captions)

*See LSR Flow-Through Matrix following O-6 for a list of services, including complex services, and whether LSRs issued for the services are eligible to flow through.

Total System Fallout: Errors that require manual review by the LSCS to determine if the error is caused by the CLEC, or is due to BellSouth system functionality. If it is determined the error is caused by the CLEC, the LSR will be sent back to the CLEC for clarification. If it is determined the error is BellSouth caused, the LCSC representative will correct the error, and the LSR will continue to be processed.

Z Status: LSRs that receive a supplemental LSR submission prior to final disposition of the original LSR.

Calculation

Percent Flow Through = a / [b - (c + d + e + f)] X 100

- a = The total number of LSRs that flow through LESOG/LAUTO and reach a status for a FOC to be issued
- b = the number of LSRs passed from LEO/LNP Gateway to LESOG/LAUTO
- c = the number of LSRs that fall out for manual processing
- d = the number of LSRs that are returned to the CLEC for clarification
- e = the number of LSRs that contain errors made by CLECs
- f = the number of LSRs that receive a Z status

Percent Achieved Flow Through = a / [b-(c+d+e)] X 100

- a = the number of LSRs that flow through LESOG/LAUTO and reach a status for a FOC to be issued
- b = the number of LSRs passed from LEO/LNP Gateway to LESOG/LAUTO
- c = the number of LSRs that are returned to the CLEC for clarification
- d = the number of LSRs that contain errors made by CLECs
- e = the number of LSRs that receive Z status

Report Structure

- CLEC Aggregate
  - Region

Data Retained

Relating to CLEC Experience	Relating to BellSouth Performance
• Report Month • Total Number of LSRs Received, by Interface, by CLEC - TAG - EDI - LENS • Total Number of Errors by Type, by CLEC - Fatal Rejects - Auto Clarification - CLEC Caused System Fallout • Total Number of Errors by Error Code • Total Fallout for Manual Processing	• Report Month • Total Number of Errors By Type - Bellsouth System Error

SQM Disaggregation - Analog/Benchmark

SQM Level of Disaggregation	SQM Analog/Benchmark[2]
• Residence	• Benchmark: 95%
• Business	• Benchmark: 90%
• UNE	• Benchmark: 85%
• LNP	• Benchmark: 85%

SEEM Measure

SEEM Measure		
Yes	Tier I	
	Tier II	X

SEEM Disaggregation - Analog/Benchmark

SEEM Disaggregation	SEEM Analog/Benchmark[3]
• Residence	• Benchmark: 95%
• Business	• Benchmark: 90%
• UNE	• Benchmark: 85%
• LNP	• Benchmark: 85%

[2] *Benchmarks do not apply to the "Percent Achieved Flow Through."*

[3] *Benchmarks do not apply to the "Percent Achieved Flow Through."*

O-4: Percent Flow-Through Service Requests (Detail)

Definition

A detailed list, by CLEC, of the percentage of Local Service Requests (LSR) and LNP Local Service Requests (LNP LSRs) submitted electronically via the CLEC mechanized ordering process that flow through and reach a status for a FOC to be issued, without manual or human intervention.

Exclusions

- Fatal Rejects
- Auto Clarification
- Manual Fallout
- CLEC System Fallout
- Scheduled OSS Maintenance

Business Rules

The CLEC mechanized ordering process includes all LSRs, including supplements (subsequent versions) which are submitted through one of the three gateway interfaces (TAG, EDI, and LENS), that flow through and reach a status for a FOC to be issued, without manual intervention. These LSRs can be divided into two classes of service: Business and Residence, and three types of service: Resale, and Unbundled Network Elements (UNE). The CLEC mechanized ordering process does not include LSRs, which are submitted manually (for example, fax and courier) or are not designed to flow through (for example, Manual Fallout.)

Definitions:

Fatal Rejects: Errors that prevent an LSR, submitted electronically by the CLEC, from being processed further. When an LSR is submitted by a CLEC, LEO/LNP Gateway will perform edit checks to ensure the data received is correctly formatted and complete. For example, if the PON field contains an invalid character, LEO/LNP Gateway will reject the LSR and the CLEC will receive a Fatal Reject.

Auto-Clarification: Clarifications that occur due to invalid data within the LSR. LESOG/LAUTO will perform data validity checks to ensure the data within the LSR is correct and valid. For example, if the address on the LSR is not valid according to RSAG, or if the LNP is not available for the NPA NXXX requested, the CLEC will receive an Auto-Clarification.

Manual Fallout: Planned Fallout that occur by design. Certain LSRs are designed to fallout of the Mechanized Order Process due to their complexity. These LSRs are manually processed by the LCSC. When a CLEC submits an LSR, LESOG/LAUTO will determine if the LSR should be forwarded to LCSC for manual handling. Following are the categories for Manual Fallout:

1. Complex*
2. Special pricing plans
3. Some Partial migrations
4. New telephone number not yet posted to BOCRIS
5. Pending order review required
6. CSR inaccuracies such as invalid or missing CSR data in CRIS
7. Expedites (requested by the CLEC)
8. Denials-restore and conversion, or disconnect and conver sion orders
9. Class of service invalid in certain states with some types of service
10. Low volume such as activity type “T” (move)
11. More than 25 business lines, or more than 15 loops
12. Transfer of calls option for the CLEC end users
13. Directory Listings (Indentions and Captions)

*See LSR Flow-Through Matrix following O-6 for a list of services, including complex services, and whether LSRs issued for the services are eligible to flow through.

Total System Fallout: Errors that require manual review by the LSCS to determine if the error is caused by the CLEC, or is due to BellSouth system functionality. If it is determined the error is caused by the CLEC, the LSR will be sent back to the CLEC for clarification. If it is determined the error is BellSouth caused, the LCSC representative will correct the error, and the LSR will continue to be processed.

Z Status: LSRs that receive a supplemental LSR submission prior to final disposition of the original LSR.

Calculation

Percent Flow Through = a / [b - (c + d + e + f)] X 100

- a = The total number of LSRs that flow through LESOG/LAUTO and reach a status for a FOC to be issued
- b = the number of LSRs passed from LEO/LNP Gateway to LESOG/LAUTO
- c = the number of LSRs that fall out for manual processing
- d = the number of LSRs that are returned to the CLEC for clarification
- e = the number of LSRs that contain errors made by CLECs
- f = the number of LSRs that receive a Z status

Percent Achieved Flow Through = a / [b-(c+d+e)] X 100

- a = the number of LSRs that flow through LESOG/LAUTO and reach a status for a FOC to be issued
- b = the number of LSRs passed from LEO/LNP Gateway to LESOG/LAUTO
- c = the number of LSRs that are returned to the CLEC for clarification
- d = the number of LSRs that contain errors made by CLECs
- e = the number of LSRs that receive Z status

Report Structure

Provides the flow through percentage for each CLEC (by alias designation) submitting LSRs through the CLEC mechanized ordering process. The report provides the following:

- CLEC (by alias designation)
- Number of fatal rejects
- Mechanized interface used
- Total mechanized LSRs
- Total manual fallout
- Number of auto clarifications returned to CLEC
- Number of validated LSRs
- Number of BellSouth caused fallout
- Number of CLEC caused fallout
- Number of Service Orders Issued
- Base calculation
- CLEC error excluded calculation

Data Retained

Relating to CLEC Experience	Relating to BellSouth Performance
• Report Month • Total Number of LSRs Received, by Interface, by CLEC - TAG - EDI - LENS • Total Number of Errors by Type, by CLEC - Fatal Rejects - Auto Clarification - CLEC Errors • Total Number of Errors by Error Code • Total Fallout for Manual Processing	• Report Month • Total Number of Errors by Type - Bellsouth System Error

SQM Disaggregation - Analog/Benchmark

SQM Level of Disaggregation	SQM Analog/Benchmark[4]
• Residence	• Benchmark: 95%
• Business	• Benchmark: 90%
• UNE	• Benchmark: 85%
• LNP	• Benchmark: 85%

[4] *Benchmarks do not apply to the "Percent Achieved Flow Through."*

SEEM Measure

SEEM Measure		
Yes	Tier I	X
	Tier II	

SEEM Disaggregation - Analog/Benchmark

SEEM Disaggregation	SEEM Analog/Benchmark[5]
• Residence	• Benchmark: 95%
• Business	• Benchmark: 90%
• UNE	• Benchmark: 85%
• LNP	• Benchmark: 85%

[5] *Benchmarks do not apply to the "Percent Achieved Flow Through."*

O-5: Flow-Through Error Analysis

Definition

An analysis of each error type (by error code) that was experienced by the LSRs that did not flow through or reached a status for a FOC to be issued.

Exclusions

Each Error Analysis is error code specific, therefore exclusions are not applicable.

Business Rules

The CLEC mechanized ordering process includes all LSRs, including supplements (subsequent versions) which are submitted through one of the three gateway interfaces (TAG, EDI, and LENS), that flow through and reach a status for a FOC to be issued. The CLEC mechanized ordering process does not include LSRs which are submitted manually (for example, fax and courier).

Calculation

Total for each error type.

Report Structure

Provides an analysis of each error type (by error code). The report is in descending order by count of each error code and provides the following:

- Error Type (by error code)
- Count of each error type
- Percent of each error type
- Cumulative percent
- Error Description
- CLEC Caused Count of each error code
- Percent of aggregate by CLEC caused count
- Percent of CLEC caused count
- BellSouth Caused Count of each error code
- Percent of aggregate by BellSouth caused count
- Percent of BellSouth by BellSouth caused count

Data Retained

Relating to CLEC Experience	Relating to BellSouth Performance
• Report Month • Total Number of LSRs Received • Total Number of Errors by Type (by error code) - CLEC Caused Error	• Report Month • Total Number of Errors by Type (by error code) - BellSouth System Error

SQM Disaggregation - Analog/Benchmark

SQM Level of Disaggregation	SQM Analog/Benchmark
• Not Applicable	• Not Applicable

SEEM Measure

SEEM Measure		
No	Tier I	
	Tier II	

SEEM Disaggregation - Analog/Benchmark

SEEM Disaggregation	SEEM Analog/Benchmark
• Not Applicable	• Not Applicable

O-6: CLEC LSR Information

Definition

A list with the flow through activity of LSRs by CC, PON and Ver, issued by each CLEC during the report period.

Exclusions

- Fatal Rejects
- LSRs submitted manually

Business Rules

The CLEC mechanized ordering process includes all LSRs, including supplements (subsequent versions) which are submitted through one of the three gateway interfaces (TAG, EDI, and LENS), that flow through and reach a status for a FOC to be issued. The CLEC mechanized ordering process does not include LSRs which are submitted manually (for example, fax and courier).

Calculation

Not Applicable

Report Structure

Provides a list with the flow through activity of LSRs by CC, PON and Ver, issued by each CLEC during the report period with an explanation of the of the columns and content. This report is available on a CLEC specific basis. The report provides the following for each LSR.

- CC
- PON
- Ver
- Timestamp
- Type
- Err #
- Note or Error Description

Data Retained

Relating to CLEC Experience	Relating to BellSouth Performance
• Report Month • Record of LSRs Received by CC, PON and Ver • Record of Timestamp, Type, Err # and Note or Error Description for each LSR by CC, PON and Ver	• Not Applicable

SQM Disaggregation - Analog/Benchmark

SQM Level of Disaggregation	SQM Analog/Benchmark
• Not Applicable	• Not Applicable

SEEM Measure

SEEM Measure		
No	Tier I	
	Tier II	

SEEM Disaggregation - Analog/Benchmark

SEEM Disaggregation	SEEM Analog/Benchmark
• Not Applicable	• Not Applicable

LSR Flow Through Matrix

Product	Product Type	Reqtype	ACT Type	F/T[3]	Complex Service	Complex Order	Planned Fallout For Manual Handling[1]	EDI	TAG[2]	LENS[4]
2 wire analog DID trunk port	U,C	A	N,T	No	UNE	Yes	NA	N	N	N
2 wire analog port	U	A	N,T	No	UNE	No	Yes	Y	Y	N
2 wire ISDN digital line	U,C	A	N,T	No	UNE	Yes	NA	N	N	N
2 wire ISDN digital loop	U,C	A	N,T	Yes	UNE	Yes	No	Y	Y	N
3 Way Calling	R,B	E,M	N,C,T,V,W	Yes	No	No	No	Y	Y	Y
4 wire analog voice grade loop	U,C	A	N,T	Yes	UNE	Yes	No	Y	Y	N
4 wire DSO & PRI digital loop	U,C	A	N,T	No	UNE	Yes	NA	N	N	N
4 wire DS1 & PRI digital loop	U,C	A	N,T	No	UNE	Yes	NA	N	N	N
4 wire ISDN DSI digital trunk ports	U,C	A	N,T	No	UNE	Yes	NA	N	N	N
Accupulse	C	E	N,C,T,V,W	No	Yes	Yes	NA	N	N	N
ADSL	R,B,C	E	V,W	No	UNE	No	No	Y	Y	N
Area Plus	R,B	E,M	N,C,T,V,W	Yes	No	No	No	Y	Y	Y
Basic Rate ISDN	U,C	A	N,T	No	Yes	Yes	Yes	Y	Y	N
Basic Rate ISDN 2 Wire	C	E	C, D,T,V,W	No	Yes	Yes	Yes	Y	Y	N
Basic Rate ISDN 2 Wire	C	E	N,T	No	Yes	Yes	N/A	N	N	N
Basic Rate ISDN 2 Wire UNE P	C	M	N,C,D,V	No	YES	Yes	N/A	N	N	N
Analog Data/Private Line	C	E	N, C, T, V, W, D, P, Q	No	Yes	Yes	N/A	N	N	N
Call Block	R,B	E,B,M	N,C,T,V,W	Yes	No	No	No	Y	Y	Y
Call Forwarding	R,B	E,B,M	N,C,T,V,W	Yes	No	No	No	Y	Y	Y
Call Return	R,B	E,B,M	N,C,T,V,W	Yes	No	No	No	Y	Y	Y
Call Selector	R,B	E,B,M	N,C,T,V,W	Yes	No	No	No	Y	Y	Y
Call Tracing	R,B	E,B,M	N,C,T,V,W	Yes	No	No	No	Y	Y	Y
Call Waiting	R,B	E,B,M	N,C,T,V,W	Yes	No	No	No	Y	Y	Y
Call Waiting Deluxe	R,B	E,B,M	N,C,T,V,W	Yes	No	No	No	Y	Y	Y
Caller ID	R,B	E,B,M	N,C,T,V,W	Yes	No	No	No	Y	Y	Y
CENTREX	C	P	V,P	No	Yes	Yes	NA	N	N	N
DID ACT W	C	N	W	No	Yes	Yes	Yes	Y	Y	Y
Digital Data Transport	U	E	N,C,T,V,W	No	UNE	Yes	NA	N	N	N
Directory Listing Indentions	B,U	B,C,E,F, J,M,N	N,C,T,R,V,W,P,Q	No	No	No	Yes	Y	Y	Y
Directory Listings Captions	R,B,U	B,C,E,F, J,M,N	N,C,T,R,V,W,P,Q	No	No	Yes	Yes	Y	Y	Y
Directory Listings (simple)	R,B,U	B,C,E,F, J,M,N	N,C,T,R,V,W,P,Q	Yes	No	No	No	Y	Y	Y
DS3	U	A,M	N,C,V	No	UNE	Yes	NA	N	N	N
DS1Loop	U	A,M	N,C,V	Yes	UNE	Yes	No	Y	Y	N
DSO Loop	U	A, B	N,C,D,T,V	Yes	UNE	Yes	No	Y	Y	N
Enhanced Caller ID	R,B	E,M	C,D,N,T,V,W	Yes	No	No	No	Y	Y	Y
ESSX	C	P	C,D,T,V,S,B,W,L ,P,Q	No	Yes	Yes	NA	N	N	N
Flat Rate/Business	B	E, M	C,D,N,T,V,W	Yes	No	No	No	Y	Y	Y
Flat Rate/Residence	R	E, M	C,D,N,T,V,W	Yes	No	No	No	Y	Y	Y
FLEXSERV	C	E	N,C,D,T,V,W,P,Q	No	Yes	Yes	NA	N	N	N
Frame Relay	C	E	N,C,D,V,W	No	Yes	Yes	NA	N	N	N
FX	C	E	N,C,D,T,V,W,P,Q	No	Yes	Yes	NA	N	N	N
Ga. Community Calling	R,B	E, M	C,D,N,T,V,W	Yes	No	No	No	Y	Y	Y
HDSL	U	A	N,C,D	Yes	UNE	No	No	Y	Y	N
Hunting MLH	R,B	E, M	C,D,N,T,V,W	No	C/S4	C/S	Yes	Y	Y	N
Hunting Series Completion	R,B	E, M	C,D,N,T,V,W	Yes	C/S	C/S	No	Y	Y	Y
INP to LNP Conversion	U	C	C	No	UNE	Yes	Yes	Y	Y	N

Product	Product Type	Reqtype	ACT Type	F/T[3]	Complex Service	Complex Order	Planned Fallout For Manual Handling[1]	EDI	TAG[2]	LENS[4]
LightGate	C	E	N,C,D,T,V,W,P,Q	No	Yes	Yes	NA	N	N	N
Line Sharing	U	A	C,D	Yes	UNE	No	No	Y	Y	Y
Local Number Portability	U	C	C,D,P,V,Q	Yes	UNE	Yes	No	Y	Y	N
LNP With Complex Listing	C	C	P,V,Q,W	No	UNE	Yes	Yes	Y	Y	N
LNP with Partial Migration	U	C	D,P,V,Q	No	UNE	Yes	Yes	Y	Y	N
LNP with Complex Services	C	C	P,V,Q,W	No	UNE	Yes	Yes	Y	Y	N
Loop+INP	U	B	D,P,V,Q	Yes	UNE	No	No	Y	Y	N
Loop+LNP	U	B	C,D,N,V	Yes	UNE	No	No	Y	Y	N
Measured Rate/Bus	R,B	E,M	C,D,T,N,V,W	Yes	No	No	No	Y	Y	Y
Measured Rate/Res	R,B	E,M	C,D,T,N,V,W	Yes	No	No	No	Y	Y	Y
Megalink	C	E	N,V,W,T,D,C,P,Q	No	Yes	Yes	NA	N	N	N
Megalink-T1	C	E,M	N,V,W,T,D,C,P,Q	No	Yes	Yes	NA	N	N	N
Memory Call	R,B	E, M	C,D,N,T,V,W	Yes	No	No	No	Y	Y	Y
Memory Call Ans. Svc.	R,B	E, M	C,D,N,T,V,W	Yes	No	No	No	Y	Y	Y
Multiserv	C	P	N,C,D,T,V,S,B, W,L,P,Q	No	Yes	Yes	NA	N	N	N
Native Mode LAN Interconnection (NMLI)	C	E	N,C,D,V,W	No	Yes	Yes	NA	N	N	N
Off-Prem Stations	C	E	N,C,D,V,W,T,P,Q	No	Yes	Yes	NA	N	N	N
Optional Calling Plan	R,B	E, M	N	Yes	No	No	No	Y	Y	Y
Package/Complete Choice and Area Plus	R,B	E, M	N,T,C,V,W	Yes	No	No	No	Y	Y	Y
Pathlink Primary Rate ISDN	C	E	N,C,D,T,V,W,P,Q	No	Yes	Yes	NA	N	N	N
Pay Phone Provider	B	E	C,D,T,N,V,W	No	No	No	NA	N	N	N
PBX Standalone Port	C	F	N,C,D	No	Yes	Yes	Yes	Y	Y	N
PBX Trunks	R,B	E	N,C,D,V,W,T,P,Q	No	Yes	Yes	Yes	Y	Y	N
Port/Loop PBX	U	M	A,C,D,V	No	No	No	Yes	Y	Y	N
Port/Loop Simple	U	M	A,C,D,V	Yes	No	No	Yes	Y	Y	Y
Preferred Call Forward	R,B,U	E	C,D,T,N,V,W	Yes	No	No	No	Y	Y	Y
RCF Basic	R,B	E	N,D,W,T,F	Yes	No	No	No	Y	Y	Y
Remote Access to CF	R,B	E,M	C,D,T,N,V,W	Yes	No	No	No	Y	Y	Y
Repeat Dialing	R,B	E,M	C,D,T,N,V,W	Yes	No	No	No	Y	Y	Y
Ringmaster	R,B	E,M	C,D,T,N,V,W	Yes	No	No	No	Y	Y	Y
Smartpath	R,B	E	C,D,T,N,V,W	No	Yes	Yes	NA	N	N	N
SmartRING	C	E	N,D,C,V,W	No	Yes	Yes	NA	N	N	N
Speed Calling	R,B	E	C,D,T,N,V,W	Yes	No	No	No	Y	Y	Y
Synchronet	C	E	N	Yes	Yes	Yes	Yes	Y	Y	N
Tie Lines	C	E	N,C,D,V,W,T,P,Q	No	Yes	Yes	NA	N	N	N
Touchtone	R,B	E	C,D,T,N,V,W	Yes	No	No	No	Y	Y	Y
Unbundled Loop-Analog 2W, SL1, SL2	U	A,B	C,D,T,N,V,W	Yes	UNE	No	No	Y	Y	Y
WATS	R,B	E	W,D	No	Yes	Yes	NA	N	N	N
XDSL	C,U	A,B	N,T,C,V,D	Yes	UNE	No	No	Y	Y	N
XDSL Extended LOOP	C,U	A,B	N,T,C,V,D	No	UNE	Yes	NA	N	N	N
Collect Call Block	R,B	E	N,T,C,V,W,D	Yes	No	No	No	Y	Y	Y
900 Call Block	R,B	E	N,T,C,V,W,D	Yes	No	No	No	Y	Y	Y
3rd Party Call Block	R,B	E	N,T,C,V,W,D	Yes	No	No	No	Y	Y	Y
Three Way Call Block	R,B	E	N,T,C,V,W,D	Yes	No	No	No	Y	Y	Y
PIC/LPIC Change	R,B	E	T,C,V,	Yes	No	No	No	Y	Y	Y
PIC/LPIC Freeze	R,B	E	N,T,C,V	Yes	No	No	No	Y	Y	Y

Note[1]: Planned Fallout for Manual Handling denotes those services that are electronically submitted and are not intended to flow through due to the complexity of the service.

Note[2]: The TAG column includes those LSRs submitted via Robo TAG.

Note[3]: For all services that indicate 'No' for flow-through, the following reasons, in addition to errors or complex services, also prompt manual handling: Expedites from CLECs, special pricing plans, denials restore and conversion or disconnect and conversion both required, partial migrations (although conversions-as-is flow through for issue 9), class of service invalid in certain states with some TOS e.g. government, or cannot be changed when changing main TN on C activity, low volume e.g. activity type T=move, pending order review required, more than 25 business lines, CSR inaccuracies such as invalid or missing CSR data in CRIS, Directory listings – Indentions, Directory listings – Captions, transfer of calls option for CLEC end user – new TN not yet posted to BOCRIS. Many are unique to the CLEC environment.

Note[4]: Services with C/S in the Complex Service and/or the Complex Order columns can be either complex or simple.

Note[5]: EELs are manually ordered.

Note[6]: LSRs submitted for Resale Products and Services for which there is a temporary promotion or discount plan will be processed identically to those LSRs ordering the same Products or Services without a promotion or discount plan.

O-7: Percent Rejected Service Requests

Definition

Percent Rejected Service Request is the percent of total Local Service Requests (LSRs) received which are rejected due to error or omission. An LSR is considered valid when it is submitted by the CLEC and passes edit checks to insure the data received is correctly formatted and complete.

Exclusions

- Service Requests canceled by the CLEC prior to being rejected/clarified.
- Scheduled OSS Maintenance

Business Rules

Fully Mechanized: An LSR is considered "rejected" when it is submitted electronically but does not pass LEO edit checks in the ordering systems (EDI, LENS, TAG, LEO, LESOG) and is returned to the CLEC without manual intervention. There are two types of "Rejects" in the Mechanized category:

A **Fatal Reject** occurs when a CLEC attempts to electronically submit an LSR but required fields are either not populated or incorrectly populated and the request is returned to the CLEC before it is considered a valid LSR.

Fatal rejects are reported in a separate column, and for informational purposes ONLY. Fatal rejects are excluded from the calculation of the percent of total LSRs rejected or the total number of rejected LSRs.

An **Auto Clarification** occurs when a valid LSR is electronically submitted but rejected from LESOG because it does not pass further edit checks for order accuracy.

Partially Mechanized: A valid LSR, which is electronically submitted (via EDI, LENS, TAG) but cannot be processed electronically and "falls out" for manual handling. It is then put into "clarification" and sent back (rejected) to the CLEC.

Total Mechanized: Combination of Fully Mechanized and Partially Mechanized LSRs electronically submitted by the CLEC.

Non-Mechanized: LSRs which are faxed or mailed to the LCSC for processing and "clarified" (rejected) back to the CLEC by the BellSouth service representative.

Interconnection Trunks: Interconnection Trunks are ordered on Access Service Requests (ASRs). ASRs are submitted to and processed by the Interconnection Purchasing Center (IPC). Trunk data is reported separately.

Calculation

Percent Rejected Service Requests = (a / b) X 100

- a = Total Number of Rejected Service Requests in the Reporting Period
- b = Total Number of Service Requests Received in the Reporting Period

Report Structure

- Fully Mechanized, Partially Mechanized, Total Mechanized, Non-Mechanized
- CLEC Specific
- CLEC Aggregate
- Geographic Scope
  - State
  - Region
- Product Specific Percent Rejected
- Total Percent Rejected

Data Retained

Relating to CLEC Experience	Relating to BellSouth Performance
• Report Month • Total Number of LSRs • Total Number of Rejects • State and Region • Total Number of ASRs (Trunks)	• Not Applicable

SQM Disaggregation - Analog/Benchmark

SQM Level of Disaggregation	SQM Analog/Benchmark
Mechanized, Partially Mechanized and Non-Mechanized • Resale - Residence • Resale - Business • Resale – Design (Special) • Resale PBX • Resale Centrex • Resale ISDN • LNP (Standalone) • INP (Standalone) • 2W Analog Loop Design • 2W Analog Loop Non-Design • 2W Analog Loop With INP Design • 2W Analog Loop With INP Non-Design • 2W Analog Loop With LNP Design • 2W Analog Loop With LNP Non-Design • UNE Loop + Port Combinations • Switch Ports • UNE Combination Other • UNE xDSL (ADSL, HDSL, UCL) • Line Sharing • UNE ISDN Loop • UNE Other Design • UNE Other Non-Design • Local Interoffice Transport • Local Interconnection Trunks	• Diagnostic

SEEM Measure

SEEM Measure		
No	Tier I	
	Tier II	

SEEM Disaggregation - Analog/Benchmark

SEEM Disaggregation	SEEM Analog/Benchmark
• Not Applicable	• Not Applicable

O-8: Reject Interval

Definition

Reject Interval is the average reject time from receipt of an LSR to the distribution of a Reject. An LSR is considered valid when it is submitted by the CLEC and passes edit checks to insure the data received is correctly formatted and complete.

Exclusions

- Service Requests canceled by CLEC prior to being rejected/clarified
- Designated Holidays are excluded from the interval calculation
- LSRs which are identified and classified as "Projects"
- The following hours for Partially mechanized and Non-mechanized LSRs are excluded from the interval calculation:

  Residence Resale Group – Monday through Saturday 7:00PM until 7:00AM
  From 7:00 PM Saturday until 7:00 AM Monday

  Business Resale, Complex, UNE Groups – Monday through Friday 6:00PM until 8:00AM
  From 6:00 PM Friday until 8:00 AM Monday.

  The hours excluded will be altered to reflect changes in the Center operating hours. The LCSC will accept faxed LSRs only during posted hours of operation.

  The interval will be the amount of time accrued from receipt of the LSR until normal closing of the center if an LSR is worked using overtime hours.

  In the case of a Partially Mechanized LSR received and worked after normal business hours, the interval will be set at one (1) minute.

- Scheduled OSS Maintenance

Business Rules

Fully Mechanized: The elapsed time from receipt of a valid electronically submitted LSR (date and time stamp in EDI, LENS or TAG) until the LSR is rejected (date and time stamp or reject in EDI, TAG or LENS). Auto Clarifications are considered in the Fully Mechanized category.

Partially Mechanized: The elapsed time from receipt of a valid electronically submitted LSR (date and time stamp in EDI, LENS or TAG) until it falls out for manual handling. The stop time on partially mechanized LSRs is when the LCSC Service Representative clarifies the LSR back to the CLEC via LENS, EDI, or TAG.

Total Mechanized: Combination of Fully Mechanized and Partially Mechanized LSRs which are electronically submitted by the CLEC.

Non-Mechanized: The elapsed time from receipt of a valid LSR (date and time stamp of FAX or date and time mailed LSR is received in the LCSC) until notice of the reject (clarification) is returned to the CLEC via LON.

Interconnection Trunks: Interconnection Trunks are ordered on Access Service Requests (ASRs). ASRs are submitted to and processed by the Local Interconnection Service Center (LISC). Trunk data is reported separately. All interconnection trunks are counted in the non-mechanized category.

Calculation

Reject Interval = (a - b)

- a = Date and Time of Service Request Rejection
- b = Date and Time of Service Request Receipt

Average Reject Interval = (c / d)

- c = Sum of all Reject Intervals
- d = Number of Service Requests Rejected in Reporting Period

Report Structure

- CLEC Specific
- CLEC Aggregate
- Fully Mechanized, Partially Mechanized, Total Mechanized, Non-Mechanized
- Geographic Scope

- State
- Region

- Mechanized:
  0 - <= 4 minutes
  >4 - <= 8 minutes
  >8 - <= 12 minutes
  >12 - <= 60 minutes
  0 - <= 1 hour
  >1 - <= 4 hours
  >4 - <= 8 hours
  >8 - <= 12 hours
  >12 - <= 16 hours
  >16 - <= 20 hours
  >20 - <= 24 hours
  >24 hours
- Partially Mechanized:
  0 - <= 1 hour
  >1 - <= 4 hours
  >4 - <= 8 hours
  >8 - <= 10 hours
  0 - <= 10 hours
  >10 - <= 18 hours
  0 - <= 18 hours
  >18 - <= 24 hours
  >24 hours
- Non-mechanized:
  0 - <= 1 hour
  >1 - <= 4 hours
  >4 - <= 8 hours
  >8 - <= 12 hours
  >12 - <= 16 hours
  >16 - <= 20 hours
  >20 - <= 24 hours
  0 - <= 24 hours
  > 24 hours
- Trunks:
  <= 4 days
  >4 - <= 8 days
  >8 - <= 12 days
  >12 - <= 14 days
  >14 - <= 20 days
  >20 days

Data Retained

Relating to CLEC Experience	Relating to BellSouth Performance
Report Month • Reject Interval • Total Number of LSRs • Total Number of Rejects • State and Region • Total Number of ASRs (Trunks)	• Not Applicable

SQM Disaggregation - Analog/Benchmark

SQM Level of Disaggregation	SQM Analog/Benchmark
• Resale - Residence • Resale - Business • Resale - Design (Special) • Resale PBX • Resale Centrex	• Mechanized: - 97% <= I Hour • Partially Mechanized: - 85% <= 24 hours - 85% <= 18 Hours (05/01/01)

• Resale ISDN • LNP (Standalone) • INP (Standalone) • 2W Analog Loop Design • 2W Analog Loop Non-Design • 2W Analog Loop With INP Design • 2W Analog Loop With INP Non-Design • 2W Analog Loop With LNP Design • 2W Analog Loop With LNP Non-Design • UNE Loop + Port Combinations • Switch Ports • UNE Combination Other • UNE xDSL (ADSL, HDSL, UCL) • Line Sharing • UNE ISDN Loops • UNE Other Non-Design • Local Interoffice Transport • UNE Other Design	- 85% <= 10 Hours (08/01/01) • Non-Mechanized: - 85% <= 24 hours
• Local Interconnection Trunks	• Trunks: - 85% <= 4 Days

SEEM Measure

SEEM Measure		
Yes	Tier I	X
	Tier II	X

SEEM Disaggregation - Analog/Benchmark

SEEM Disaggregation	SEEM Analog/Benchmark
• Fully Mechanized	• 97% <= 1 Hour
• Partially Mechanized	• 85% <= 24 Hours • 85% <= 18 Hours (05/01/01) • 85% <= 10 Hours (08/01/01)
• Non-Mechanized	• 85% <= 24 Hours

O-9: Firm Order Confirmation Timeliness

Definition

Interval for Return of a Firm Order Confirmation (FOC Interval) is the average response time from receipt of valid LSR to distribution of a Firm Order Confirmation.

Exclusions

- Rejected LSRs
- Designated Holidays are excluded from the interval calculation
- LSRs which are identified and classified as "Projects"
- The following hours for Partially Mechanized and Non-mechanized LSRs are excluded from the interval calculation:

  Residence Resale Group – Monday through Saturday 7:00PM until 7:00AM
  From 7:00 PM Saturday until 7:00 AM Monday.

  Business Resale, Complex, UNE Groups – Monday through Friday 6:00PM until 8:00AM
  From 6:00 PM Friday until 8:00 AM Monday.

  The hours excluded will be altered to reflect changes in the Center operating hours. The LCSC will accept faxed LSRs only during posted hours of operation.

  The interval will be the amount of time accrued from receipt of the LSR until normal closing of the center if an LSR is worked using overtime hours.

  In the case of a Partially Mechanized LSR received and worked after normal business hours, the interval will be set at one (1) minute.

- Scheduled OSS Maintenance

Business Rules

- **Fully Mechanized:** The elapsed time from receipt of a valid electronically submitted LSR (date and time stamp in EDI, LENS or TAG) until the LSR is processed, appropriate service orders are generated and a Firm Order Confirmation is returned to the CLEC via EDI, LENS or TAG.
- **Partially Mechanized:** The elapsed time from receipt of a valid electronically submitted LSR (date and time stamp in EDI, LENS, or TAG) which falls out for manual handling until appropriate service orders are issued by a BellSouth service representative via Direct Order Entry (DOE) or Service Order Negotiation Generation System (SONGS) to SOCS and a Firm Order Confirmation is returned to the CLEC via EDI, LENS, or TAG.
- **Total Mechanized:** Combination of Fully Mechanized and Partially Mechanized LSRs which are electronically submitted by the CLEC.
- **Non-Mechanized:** The elapsed time from receipt of a valid paper LSR (date and time stamp of FAX or date and time paper LSRs received in LCSC) until appropriate service orders are issued by a BellSouth service representative via Direct Order Entry (DOE) or Service Order Negotiation Generation System (SONGS) to SOCS and a Firm Order Confirmation is sent to the CLEC via LON.
- **Interconnection Trunks:** Interconnection Trunks are ordered on Access Service Requests (ASRs). ASRs are submitted to and processed by the Local Interconnection Service Center (LISC). Trunk data is reported separately.

Calculation

Firm Order Confirmation Interval = (a - b)

- a = Date & Time of Firm Order Confirmation
- b = Date & Time of Service Request Receipt)

Average FOC Interval = (c / d)

- c = Sum of all FOC Intervals
- d = Total Number of Service Requests Confirmed in Reporting Period

FOC Interval Distribution (for each interval) = (e / f) X 100

- e = Service Requests Confirmed in interval
- f = Total Service Requests Confirmed in the Reporting Period

Report Structure

- Fully Mechanized, Partially Mechanized, Total Mechanized, Non-Mechanized
  - CLEC Specific
  - CLEC Aggregate
- Geographic Scope
  - State
  - Region
- Fully Mechanized:
  0 - <= 15 minutes
  >15 - <= 30 minutes
  >30 - <= 45 minutes
  >45 - <= 60 minutes
  >60 - <= 90 minutes
  >90 - <= 120 minutes
  >120 - <= 180 minutes
  0 - <= 3 hours
  >3 - <= 6 hours
  >6 - <= 12 hours
  >12 - <= 24 hours
  >24 - <= 48 hours
  >48 hours
- Partially Mechanized:
  0 - <= 4 hours
  >4 - <= 8 hours
  >8 - <= 10 hours
  0 - <= 10 hours
  >10 - <= 18 hours
  0 - <= 18 hours
  >18 - <= 24 hours
  0 - <= 24 hours
  >24 - <= 48 hours
  >48 hours
- Non-Mechanized:
  0 - <= 4 hours
  >4 - <= 8 hours
  >8 - <= 12 hours
  >12 - <= 16 hours
  >16 - <= 20 hours
  >20 - <= 24 hours
  >24 - <= 36 hours
  0 - <= 36 hours
  >36 - <= 48 hours
  >48 hours
- Trunks:
  0 - <= 5 days
  >5 - <= 10 days
  0 - <= 10 days
  >10 - <= 15 days
  >15 - <= 20 days
  >20 days

Data Retained

Relating to CLEC Experience	Relating to BellSouth Performance
• Report Month • Interval for FOC • Total Number of LSRs • State and Region • Total Number of ASRs (Trunks)	• Not Applicable

SQM Disaggregation - Analog/Benchmark

SQM Level of Disaggregation	SQM Analog/Benchmark
• Resale – Residence • Resale – Business • Resale – Design (Special) • Resale PBX • Resale Centrex • Resale ISDN • LNP (Standalone) • INP(Standalone) • 2W Analog Loop Design • 2W Analog Loop Non-Design • 2W Analog Loop With INP Design • 2W Analog Loop With INP Non-Design • 2W Analog Loop With LNP Design • 2W Analog Loop With LNP Non-Design • UNE Loop + Port Combinations • Switch Ports • UNE Combination Other • UNE xDSL (ADSL, HDSL, UCL) • Line Sharing • UNE ISDN Loops • UNE Other Design • UNE Other Non-Design • Local Interoffice Transport	• Mechanized: - 95% <= 3 Hours • Partially Mechanized: - 85% <= 24 Hours - 85% <= 18 Hours (05/01/01) - 85% <= 10 Hours (08/01/01) • Non-mechanized: - 85% <= 36 Hours
• Local Interconnection Trunks	• Trunks: - 95% <= 10 Days

SEEM Measure

SEEM Measure		
Yes	Tier I	X
	Tier II	X

SEEM Disaggregation - Analog/Benchmark

SEEM Disaggregation	SEEM Analog/Benchmark
• Fully Mechanized	• 95% <= 3 Hours
• Partially Mechanized	• 85% <= 24 Hours • 85% <= 18 Hours (05/01/01) • 85% <= 10 Hours (08/01/01)
• Non-Mechanized	• 85% <= 36 Hours
• IC Trunks	• 95% <= 10 Days

O-10: Service Inquiry with LSR Firm Order Confirmation (FOC) Response Time Manual[6]

Definition

This report measures the interval and the percent within the interval from the submission of a Service Inquiry (SI) with Firm Order LSR to the distribution of a Firm Order Confirmation (FOC).

Exclusions

- Designated Holidays are excluded from the interval calculation
- Weekend hours from 5:00PM Friday until 8:00AM Monday are excluded from the interval calculation of the Service Inquiry
- Canceled Requests
- Electronically Submitted Requests
- Scheduled OSS Maintenance

Business Rules

This measurement combines four intervals:

1. From receipt of Service Inquiry with LSR to hand off to the Service Advocacy Center (SAC) for Loop 'Look-up'.
2. From SAC start date to SAC complete date.
3. From SAC complete date to the Complex Resale Support Group (CRSG) complete date with hand off to LCSC.
4. From receipt of SI/LSR in the LCSC to Firm Order Confirmation.

Calculation

FOC Timeliness Interval = (a - b)

- a = Date and Time Firm Order Confirmation (FOC) for SI with LSR returned to CLEC
- b = Date and Time SI with LSR received

Average Interval = (c / d)

- c = Sum of all FOC Timeliness Intervals
- d = Total number of SIs with LSRs received in the reporting period

Percent Within Interval = (e / f) X 100

- e = Total number of Service Inquiries with LSRs received by the CRSG to distribution of FOC by the Local Carrier Service Center (LCSC)
- f = Total number of Service Inquiries with LSRs received in the reporting period

Report Structure

- CLEC Aggregate
- CLEC Specific
- Geographic Scope
  - State
  - Region
- Intervals
  0 – <= 3 days
  >3 – <= 5 days
  0 – <= 5 days
  >5 – <= 7 days
  >7 – <= 10 days
  >10 – <= 15 days
  >15 days

[6] *See O-9 for FOC Timeliness*

- Average Interval measured in days

Data Retained

Relating to CLEC Experience	Relating to BellSouth Performance
• Report Month • Total Number of Requests • SI Intervals • State and Region	• Not Applicable

SQM Disaggregation - Analog/Benchmark

SQM Level of Disaggregation	SQM Analog/Benchmark
• xDSL (includes UNE unbundled ADSL, HDSL and UNE Unbundled Copper Loops) • Unbundled Interoffice Transport	• 95% Returned <= 5 Business days

SEEM Measure

SEEM Measure		
No	Tier I	
	Tier II	

SEEM Disaggregation - Analog/Benchmark

SEEM Disaggregation	SEEM Analog/Benchmark
• Not Applicable	• Not Applicable

O-11: Firm Order Confirmation and Reject Response Completeness

Definition

A response is expected from BellSouth for every Local Service Request transaction (version). More than one response or differing responses per transaction is not expected. Firm Order Confirmation and Reject Response Completeness is the corresponding number of Local Service Requests received to the combination of Firm Order Confirmation and Reject Responses.

Exclusions

- Service Requests canceled by the CLEC prior to FOC or Rejected/Clarified
- Non-Mechanized LSRs
- Scheduled OSS Maintenance

Business Rules

Mechanized – The number of FOCs or Auto Clarifications sent to the CLEC from LENS, EDI, TAG in response to electronically submitted LSRs (date and time stamp in LENS, EDI, TAG).

Partially Mechanized – The number of FOCs or Rejects sent to the CLEC from LENS, EDI, TAG in response to electronically submitted LSRs (date and time stamp in LENS, EDI, TAG), which fall out for manual handling by the LCSC personnel.

Total Mechanized – The number of the combination of Fully Mechanized and Partially Mechanized LSRs

Non-Mechanized – The number of FOCs or Rejects sent to the CLEC via FAX Server in response to manually submitted LSRs (date and time stamp in FAX Server).

Note: Manual (Non-Mechanized) LSRs have no version control by the very nature of the manual process, therefore, non-mechanized LSRs are not captured by this report.

For CLEC Results:

Firm Order Confirmation and Reject Response Completeness is determined in two dimensions:

Percent responses is determined by computing the number of Firm Order Confirmations and Rejects transmitted by BellSouth and dividing by the number of Local Service Requests (all versions) received in the reporting period.

Percent of multiple responses is determined by computing the number of Local Service Request unique versions receiving more than one Firm Order Confirmation, Reject or the combination of the two and dividing by the number of Local Service Requests (all versions) received in the reporting period.

Calculation

Single FOC/Reject Response Expected

Firm Order Confirmation / Reject Response Completeness = (a / b) X 100

- a = Total Number of Service Requests for which a Firm Order Confirmation or Reject is Sent
- b = Total Number of Service Requests Received in the Report Period

Multiple or Differing FOC / Reject Responses Not Expected

Response Completeness = [(a + b) / c] X 100

- a = Total Number of Firm Order Confirmations Per LSR Version
- b = Total Number of Reject Responses Per LSR Version
- c = Total Number of Service Requests (All Versions) Received in the Reporting Period

Report Structure

Fully Mechanized, Partially Mechanized, Total Mechanized, Non-Mechanized

- State and Region
- CLEC Specific
- CLEC Aggregate
- BellSouth Specific

Data Retained

Relating to CLEC Experience	Relating to BellSouth Performance
Report Month • Reject Interval • Total Number of LSRs • Total Number of Rejects	• Not Applicable

SQM Disaggregation - Analog/Benchmark

SQM Level of Disaggregation	SQM Analog/Benchmark
• Resale Residence • Resale Business • Resale Design • Resale PBX • Resale Centrex • Resale ISDN • LNP (Standalone) • INP (Standalone) • 2W Analog Loop Design • 2W Analog Loop Non - Design • 2W Analog Loop With INP Design • 2W Analog Loop With INP Non - Design • 2W Analog Loop With LNP Design • 2W Analog Loop With LNP Non - Design • UNE Loop and Port Combinations • Switch Ports • UNE Combination Other • UNE xDSL (ADSL, HDSL, UCL) • Line Sharing • UNE ISDN Loops • UNE Other Design • UNE Other Non - Design • Local Interoffice Transport • Local Interconnection Trunks	• 95% Returned

SEEM Measure

SEEM Measure		
Yes	Tier I	X
	Tier II	X

SEEM Disaggregation - Analog/Benchmark

SEEM Disaggregation	SEEM Analog/Benchmark
• Fully Mechanized	• 95% Returned

O-12: Speed of Answer in Ordering Center

Definition

Measures the average time a customer is in queue.

Exclusions

None

Business Rules

The clock starts when the appropriate option is selected (i.e., 1 for Resale Consumer, 2 for Resale Multiline, and 3 for UNE-LNP, etc.) and the call enters the queue for that particular group in the LCSC. The clock stops when a BellSouth service representative in the LCSC answers the call. The speed of answer is determined by measuring and accumulating the elapsed time from the entry of a CLEC call into the BellSouth automatic call distributor (ACD) until a service representative in BellSouth's Local Carrier Service Center (LCSC) answers the CLEC call.

Calculation

Speed of Answer in Ordering Center = (a / b)

- a = Total seconds in queue
- b = Total number of calls answered in the Reporting Period

Report Structure

Aggregate

- CLEC – Local Carrier Service Center
- BellSouth
  - Business Service Center
  - Residence Service Center

Note: Combination of Residence Service Center and Business Service Center data.

Data Retained

Relating to CLEC Experience	Relating to BellSouth Performance
• Mechanized tracking through LCSC Automatic Call Distributor	• Mechanized tracking through BellSouth Retail center support system.

SQM Disaggregation - Analog/Benchmark

SQM Level of Disaggregation	SQM Analog/Benchmark
Aggregate • CLEC – Local Carrier Service Center • BellSouth - Business Service Center - Residence Service Center	• Parity with Retail

SEEM Measure

SEEM Measure		
No	Tier I	
	Tier II	

SEEM Disaggregation - Analog/Benchmark

SEEM Disaggregation	SEEM Analog/Benchmark
• Not Applicable	• Not Applicable

O-13: LNP-Percent Rejected Service Requests

Definition

Percent Rejected Service Request is the percent of total Local Service Requests (LSRs) which are rejected due to error or omission. An LSR is considered valid when it is electronically submitted by the CLEC and passes LNP Gateway edit checks to insure the data received is correctly formatted and complete, i.e., fatal rejects are never accepted and, therefore, are not included.

Exclusions

- Service Requests canceled by the CLEC
- Scheduled OSS Maintenance

Business Rules

An LSR is considered "rejected" when it is submitted electronically but does not pass edit checks in the ordering systems (EDI, TAG, LNP Gateway, LAUTO) and is returned to the CLEC without manual intervention.

Fully Mechanized: There are two types of "Rejects" in the Fully Mechanized category:

A **Fatal Reject** occurs when a CLEC attempts to electronically submit an LSR (via EDI or TAG) but required fields are not populated correctly and the request is returned to the CLEC.

Fatal rejects are reported in a separate column, and for informational purposes ONLY. They are not considered in the calculation of the percent of total LSRs rejected or the total number of rejected LSRs.

An **Auto Clarification** is a valid LSR which is electronically submitted (via EDI or TAG), but is rejected from LAUTO because it does not pass further edit checks for order accuracy. Auto Clarifications are returned without manual intervention.

Partially Mechanized: A valid LSR which is electronically submitted (via EDI or TAG), but cannot be processed electronically due to a CLEC error and "falls out" for manual handling. It is then put into "clarification", and sent back (rejected) to the CLEC.

Total Mechanized: Combination of Fully Mechanized and Partially Mechanized rejects.

Non-Mechanized: A valid LSR which is faxed or mailed to the BellSouth LCSC.

Calculation

LNP-Percent Rejected Service Requests = (a / b) X 100

- a = Number of Service Requests Rejected in the Reporting Period
- b = Number of Service Requests Received in the Reporting Period

Report Structure

- Fully Mechanized, Partially Mechanized, Total Mechanized, Non-Mechanized
- CLEC Specific
- CLEC Aggregate

Data Retained

Relating to CLEC Experience	Relating to BellSouth Performance
• Not Applicable	• Not Applicable

SQM Disaggregation - Analog/Benchmark

SQM Level of Disaggregation	SQM Analog/Benchmark
• LNP • UNE Loop With LNP	• Diagnostic

SEEM Measure

SEEM Measure		
No	Tier I	
	Tier II	

SEEM Disaggregation - Analog/Benchmark

SEEM Disaggregation	SEEM Analog/Benchmark
• Not Applicable	• Not Applicable

O-14: LNP-Reject Interval Distribution & Average Reject Interval

Definition

Reject Interval is the average reject time from receipt of an LSR to the distribution of a Reject. An LSR is considered valid when it is electronically submitted by the CLEC and passes LNP Gateway edit checks to insure the data received is correctly formatted and complete.

Exclusions

- Service Requests canceled by the CLEC
- Designated Holidays are excluded from the interval calculation
- LSRs which are identified and classified as "Projects"
- The following hours for Partially mechanized and Non-mechanized LSRs are excluded from the interval calculation:

  Residence Resale Group – Monday through Saturday 7:00PM until 7:00AM
  From 7:00 PM Saturday until 7:00 AM Monday

  Business Resale, Complex, UNE Groups – Monday through Friday 6:00PM until 8:00AM
  From 6:00 PM Friday until 8:00 AM Monday.

  The hours excluded will be altered to reflect changes in the Center operating hours. The LCSC will accept faxed LSRs only during posted hours of operation.

  The interval will be the amount of time accrued from receipt of the LSR until normal closing of the center if an LSR is worked using overtime hours.

  In the case of a Partially Mechanized LSR received and worked after normal business hours, the interval will be set at one (1) minute.

- Scheduled OSS Maintenance

Business Rules

The Reject interval is determined for each rejected LSR processed during the reporting period. The Reject interval is the elapsed time from when BellSouth receives LSR until that LSR is rejected back to the CLEC. Elapsed time for each LSR is accumulated for each reporting dimension. The accumulated time for each reporting dimension is then divided by the associated total number of rejected LSRs to produce the reject interval distribution.

An LSR is considered "rejected" when it is submitted electronically but does not pass edit checks in the ordering systems (EDI, TAG, LNP Gateway, LAUTO) and is returned to the CLEC without manual intervention.

Fully Mechanized: There are two types of "Rejects" in the Fully Mechanized category:

A **Fatal Reject** occurs when a CLEC attempts to electronically submit an LSR but required fields are not populated correctly and the request is returned to the CLEC.

An **Auto Clarification** is a valid LSR which is electronically submitted (via EDI or TAG), but is rejected from LAUTO because it does not pass further edit checks for order accuracy. Auto Clarifications are returned without manual intervention.

Partially Mechanized: A valid LSR which electronically submitted (via EDI or TAG), but cannot be processed electronically due to a CLEC error and "falls out" for manual handling. It is then put into "clarification", and sent back to the CLEC.

Total Mechanized: Combination of Fully Mechanized and Partially Mechanized rejects.

Non-Mechanized: A valid LSR which is faxed or mailed to the BellSouth LCSC.

Calculation

Reject Interval = (a - b)

- a = Date & Time of Service Request Rejection
- b = Date & Time of Service Request Receipt

Average Reject Interval = (c / d)

- c = Sum of all Reject Intervals
- d = Total Number of Service Requests Rejected in Reporting Period

Reject Interval Distribution = (e / f) X 100

- e = Service Requests Rejected in reported interval
- f = Total Number of Service Requests Rejected in Reporting Period

Report Structure

Fully Mechanized, Partially Mechanized, Total Mechanized, Non-Mechanized

- CLEC Specific
- CLEC Aggregate
- State, Region
- Fully Mechanized:
  0 - <= 4 minutes
  >4 - <= 8 minutes
  >8 - <= 12 minutes
  >12 - <= 60 minutes
  0 - <= 1 hour
  >1 - <= 4 hours
  >4 - <= 8 hours
  >8 - <= 12 hours
  >12 - <= 16 hours
  >16 - <= 20 hours
  >20 - <= 24 hours
  > 24 hours
- Partially Mechanized:
  0 - <= 1 hour
  >1 - <= 4 hours
  >4 - <= 8 hours
  >8 - <= 10 hours
  0 - <= 10 hours
  >10 - <= 18 hours
  0 - <= 18 hours
  >18 - <= 24 hours
  > 24 hours
- Non-Mechanized:
  0 - <= 1 hour
  >1 - <= 4 hours
  >4 - <= 8 hours
  >8 - <= 12 hours
  >12 - <= 16 hours
  >16 - <= 20 hours
  >20 - <= 24 hours
  0 - <= 24 hours
  >24 hours
- Average Interval in Days or Hours

Data Retained

Relating to CLEC Experience	Relating to BellSouth Performance
• Report Month • Reject Interval • Total Number of LSRs • Total number of Rejects • State and Region	• Not Applicable

SQM Disaggregation - Analog/Benchmark

SQM Level of Disaggregation	SQM Analog/Benchmark
• LNP • UNE Loop with LNP	• Mechanized: 97% <= I Hour • Partially Mechanized: 85% <= 24 Hours • Partially Mechanized: 85% <= 18 Hours (05/01/01) • Partially Mechanized: 85% <= 10 Hours (08/01/01) • Non-Mechanized: 85% <= 24 Hours

SEEM Measure

SEEM Measure		
No	Tier I	
	Tier II	

SEEM Disaggregation - Analog/Benchmark

SEEM Disaggregation	SEEM Analog/Benchmark
• Not Applicable	• Not Applicable

O-15: LNP-Firm Order Confirmation Timeliness Interval Distribution & Firm Order Confirmation Average Interval

Definition

Interval for Return of a Firm Order Confirmation (FOC Interval) is the average response time from receipt of a valid LSR to distribution of a firm order confirmation.

Exclusions

- Rejected LSRs
- Designated Holidays are excluded from the interval calculation
- LSRs which are identified and classified as "Projects"
- The following hours for Partially Mechanized and Non-mechanized LSRs are excluded from the interval calculation:

  Residence Resale Group – Monday through Saturday 7:00PM until 7:00AM

  From 7:00 PM Saturday until 7:00 AM Monday.

  Business Resale, Complex, UNE Groups – Monday through Friday 6:00PM until 8:00AM

  From 6:00 PM Friday until 8:00 AM Monday.

  The hours excluded will be altered to reflect changes in the Center operating hours. The LCSC will accept faxed LSRs only during posted hours of operation.

  The interval will be the amount of time accrued from receipt of the LSR until normal closing of the center if an LSR is worked using overtime hours.

  In the case of a Partially Mechanized LSR received and worked after normal business hours, the interval will be set at one (1) minute.

- Scheduled OSS Maintenance

Business Rules

- **Fully Mechanized:** The elapsed time from receipt of a valid electronically submitted LSR (date and time stamp in EDI, LENS or TAG) until the LSR is processed, appropriate service orders are generated and a Firm Order Confirmation is returned to the CLEC via EDI, LENS or TAG.
- **Partially Mechanized:** The elapsed time from receipt of a valid electronically submitted LSR (date and time stamp in EDI, LENS, or TAG) which falls out for manual handling until appropriate service orders are issued by a BellSouth service representative via Direct Order Entry (DOE) or Service Order Negotiation Generation System (SONGS) to SOCS and a Firm Order Confirmation is returned to the CLEC via EDI, LENS, or TAG.
- **Total Mechanized:** Combination of Fully Mechanized and Partially Mechanized LSRs which are electronically submitted by the CLEC.
- **Non-Mechanized:** The elapsed time from receipt of a valid paper LSR (date and time stamp of FAX or date and time paper LSRs received in LCSC) until appropriate service orders are issued by a BellSouth service representative via Direct Order Entry (DOE) or Service Order Negotiation Generation System (SONGS) to SOCS and a Firm Order Confirmation is sent to the CLEC via LON.

Calculation

Firm Order Confirmation Interval = (a - b)

- a = Date & Time of Firm Order Confirmation
- b = Date & Time of Service Request Receipt)

Average FOC Interval = (c / d)

- c = Sum of all FOC Intervals
- d = Total Number of Service Requests Confirmed in Reporting Period

FOC Interval Distribution (for each interval) = (e / f) X 100

- e = Service Requests Confirmed in interval
- f = Total Service Requests Confirmed in the Reporting Period

Report Structure

Fully Mechanized, Partially Mechanized, Total Mechanized, Non-Mechanized

- CLEC Specific
- CLEC Aggregate
- State and Region
- Fully Mechanized:
  0 - <= 15 minutes
  >15 - <= 30 minutes
  >30 - <= 45 minutes
  >45 - <= 60 minutes
  >60 - <= 90 minutes
  >90 - <= 120 minutes
  >120 - <= 180 minutes
  0 - <= 3 hours
  >3 - <= 6 hours
  >6 - <= 12 hours
  >12 - <= 24 hours
  >24 - <= 48 hours
  >48 hours
- Partially Mechanized:
  0 - <= 4 hours
  >4 - <= 8 hours
  >8 - <= 10 hours
  0 - <= 10 hours
  >10 - <= 18 hours
  0 - <= 18 hours
  >18 - <= 24 hours
  0 - <= 24 hours
  >24 - <= 48 hours
  > 48 hours
- Non-Mechanized:
  0 - <= 4 hours
  >4 - <= 8 hours
  >8 - <= 12 hours
  >12 - <= 16 hours
  >16 - <= 20 hours
  >20 - <= 24 hours
  >24 - <= 36 hours
  0 - <= 36 hours
  >36 - <= 48 hours
  >48 hours

Data Retained

Relating to CLEC Experience	Relating to BellSouth Performance
Report Month • Total Number of LSRs • Total Number of FOCs • State and Region	• Not Applicable

SQM Disaggregation - Analog/Benchmark

SQM Level of Disaggregation	SQM Analog/Benchmark
• LNP • UNE Loop with LNP	• Mechanized: 95% <= 3 Hours • Partially Mechanized: 85% <= 24 Hours • Partially Mechanized: 85% <= 18 Hours (05/01/01) • Partially Mechanized: 85% <= 10 Hours (08/01/01) • Non-Mechanized: 85% <= 36 hours

SEEM Measure

SEEM Measure		
No	Tier I	
	Tier II	

SEEM Disaggregation - Analog/Benchmark

SEEM Disaggregation	SEEM Analog/Benchmark
• Not Applicable	• Not Applicable

Section 3: Provisioning

P-1: Mean Held Order Interval & Distribution Intervals

Definition

When delays occur in completing CLEC orders, the average period that CLEC orders are held for BellSouth reasons, pending a delayed completion, should be no worse for the CLEC when compared to BellSouth delayed orders. Calculation of the interval is the total days orders are held and pending but not completed that have passed the currently committed due date; divided by the total number of held orders. This report is based on orders still pending, held and past their committed due date at the close of the reporting period. The distribution interval is based on the number of orders held and pending but not completed over 15 and 90 days. (Orders reported in the >90 day interval are also included in the >15 day interval.)

Exclusions

- Order Activities of BellSouth or the CLEC associated with internal or administrative use of local services (Record Orders, Listing Orders, Test Orders, etc.)
- Disconnect (D) & From (F) orders
- Orders with appointment code of 'A' for Rural orders

Business Rules

Mean Held Order Interval: This metric is computed at the close of each report period. The held order interval is established by first identifying all orders, at the close of the reporting interval, that both have not been reported as completed in SOCS and have passed the currently committed due date for the order. For each such order, the number of calendar days between the earliest committed due date on which BellSouth had a company missed appointment and the close of the reporting period is established and represents the held order interval for that particular order. The held order interval is accumulated by the standard groupings, unless otherwise noted, and the reason for the order being held. The total number of days accumulated in a category is then divided by the number of held orders within the same category to produce the mean held order interval. The interval is by calendar days with no exclusions for Holidays or Sundays.

CLEC Specific reporting is by type of held order (facilities, equipment, other), total number of orders held, and the total and average days.

Held Order Distribution Interval: This measure provides data to report total days held and identifies these in categories of >15 days and > 90 days. (Orders counted in >90 days are also included in > 15 days).

Calculation

Mean Held Order Interval = a / b

- a = Sum of held-over-days for all Past Due Orders Held for the reporting period
- b = Number of Past Due Orders Held and Pending But Not Completed and past the committed due date

Held Order Distribution Interval (for each interval) = (c / d) X 100

- c = # of Orders Held for >= 15 days or # of Orders Held for >= 90 days
- d = Total # of Past Due Orders Held and Pending But Not Completed)

Report Structure

- CLEC Specific
- CLEC Aggregate
- BellSouth Aggregate
- Circuit Breakout < 10, >= 10 (except trunks)

Data Retained

Relating to CLEC Experience	Relating to BellSouth Performance
• Report Month • CLEC Order Number and PON (PON) • Order Submission Date (TICKET_ID) • Committed Due Date (DD) • Service Type (CLASS_SVC_DESC) • Hold Reason • Total Line/circuit Count • Geographic Scope **Note**: Code in parentheses is the corresponding header found in the raw data file.	• Report Month • BellSouth Order Number • Order Submission Date • Committed Due Date • Service Type • Hold Reason • Total Line/circuit Count • Geographic Scope

SQM Disaggregation - Analog/Benchmark

SQM Level of Disaggregation	SQM Analog/Benchmark
• Resale Residence	• Retail Residence
• Resale Business	• Retail Business
• Resale Design	• Retail Design
• Resale PBX	• Retail PBX
• Resale Centrex	• Retail Centrex
• Resale ISDN	• Retail ISDN
• LNP (Standalone)	• Retail Residence and Business (POTS)
• INP (Standalone)	• Retail Residence and Business (POTS)
• 2W Analog Loop Design	• Retail Residence and Business Dispatch
• 2W Analog Loop Non-Design	• Retail Residence and Business - POTS Excluding Switch-Based Orders
• 2W Analog Loop With LNP Design	• Retail Residence and Business Dispatch
• 2W Analog Loop With LNP Non-Design	• Retail Residence and Business - POTS Excluding Switch-Based Orders
• 2W Analog Loop With INP-Design	• Retail Residence and Business Dispatch
• 2W Analog Loop With INP Non-Design	• Retail Residence and Business - POTS Excluding Switch-Based Orders
• UNE Digital Loop < DS1	• Retail Digital Loop < DS1
• UNE Digital Loop >= DS1	• Retail Digital Loop >= DS1
• UNE Loop + Port Combinations	• Retail Residence and Business
• UNE Switch Ports	• Retail Residence and Business (POTS)
• UNE Combo Other	• Retail Residence, Business and Design Dispatch
• UNE xDSL (HDSL, ADSL and UCL)	• ADSL Provided to Retail
• UNE ISDN	• Retail ISDN - BRI
• UNE Line Sharing	• ADSL Provided to Retail
• UNE Other Design	• Retail Design
• UNE Other Non-Design	• Retail Residence and Business
• Local Transport (Unbundled Interoffice Transport)	• Retail DS1/DS3 Interoffice
• Local Interconnection Trunks	• Parity with Retail

SEEM Measure

SEEM Measure		
No	Tier I	
	Tier II	

SEEM Disaggregation - Analog/Benchmark

SEEM Disaggregation	SEEM Analog/Benchmark
• Not Applicable	• Not Applicable

P-2: Average Jeopardy Notice Interval & Percentage of Orders Given Jeopardy Notices

Definition

When BellSouth can determine in advance that a committed due date is in jeopardy for facility delay, it will provide advance notice to the CLEC.

The interval is from the date/time the notice is released to the CLEC/BellSouth systems until 5pm on the commitment date of the order. The Percent of Orders is the percentage of orders given jeopardy notices for facility delay in the count of orders confirmed in the report period.

Exclusions

- Orders held for CLEC end user reasons
- Disconnect (D) & From (F) orders
- Non-Dispatch Orders

Business Rules

When BellSouth can determine in advance that a committed due date is in jeopardy for facility delay, it will provide advance notice to the CLEC. The number of committed orders in a report period is the number of orders that have a due date in the reporting period. Jeopardy notices for interconnection trunks results are usually zero as these trunks seldom experience facility delays. The Committed due date is considered the Confirmed due date. This report measures dispatched orders only. If an order is originally sent as non-dispatch and it is determined there is a facility delay, the order is converted to a dispatch code so the facility problem can be corrected. It will remain coded dispatched until completion.

Calculation

Jeopardy Interval = a - b

- a = Date and Time of Jeopardy Notice
- b = Date and Time of Scheduled Due Date on Service Order

Average Jeopardy Interval = c / d

- c = Sum of all jeopardy intervals
- d = Number of Orders Notified of Jeopardy in Reporting Period

Percent of Orders Given Jeopardy Notice = (e / f) X 100

- e = Number of Orders Given Jeopardy Notices in Reporting Period
- f = Number of Orders Confirmed (due) in Reporting Period)

Report Structure

- CLEC Specific
- CLEC Aggregate
- BellSouth Aggregate
- Dispatch Orders
- Mechanized Orders
- Non-Mechanized Orders

Data Retained

Relating to CLEC Experience	Relating to BellSouth Performance
• Report Month • CLEC Order Number and PON • Date and Time Jeopardy Notice Sent • Committed Due Date • Service Type **Note:** Code in parentheses is the corresponding header found in the raw data file.	• Report Month • BellSouth Order Number • Date and Time Jeopardy Notice Sent • Committed Due Date • Service Type

SQM Disaggregation - Analog/Benchmark

SQM Level of Disaggregation	SQM Analog/Benchmark
% Orders Given Jeopardy Notice	
• Resale Residence	• Retail Residence
• Resale Business	• Retail Business
• Resale Design	• Retail Design
• Resale PBX	• Retail PBX
• Resale Centrex	• Retail Centrex
• Resale ISDN	• Retail ISDN
• LNP (Standalone)	• Retail Residence and Business (POTS)
• INP (Standalone)	• Retail Residence and Business (POTS)
• 2W Analog Loop Design	• Retail Residence and Business Dispatch
• 2W Analog Loop Non-Design	• Retail Residence and Business - (POTS Excluding Switch- Based Orders)
• 2W Analog Loop With LNP Design	• Retail Residence and Business Dispatch
• 2W Analog Loop With LNP Non-Design	• Retail Residence and Business - (POTS Excluding Switch- Based Orders)
• 2W Analog Loop With INP Design	• Retail Residence and Business Dispatch
• 2W Analog Loop With INP Non-Design	• Retail Residence and Business (POTS Excluding Switch-Based Orders)
•UNE Digital Loop < DS1	• Retail Digital Loop < DS1
•UNE Digital Loop >= DS1	• Retail Digital Loop >= DS1
•UNE Loop + Port Combinations	• Retail Business and Residence
•UNE Switch Ports	• Retail Residence and Business (POTS)
•UNE Combo Other	• Retail Residence, Business and Design Dispatch
•UNE xDSL (HDSL, ADSL and UCL)	• ADSL Provided to Retail
•UNE ISDN	• Retail ISDN BRI
•UNE Line Sharing	• ADSL Provided to Retail
•UNE Other Design	• Retail Design
•UNE Other Non -Design	• Retail Residence and Business
•Local Transport (Unbundled Interoffice Transport)	• Retail DS1/DS3 Interoffice
•Local Interconnection Trunks	• Parity with Retail
•Average Jeopardy Notice Interval	• 95% >= 48 Hours

SEEM Measure

SEEM Measure		
No	Tier I	
	Tier II	

SEEM Disaggregation - Analog/Benchmark

SEEM Disaggregation	SEEM Analog/Benchmark
• Not Applicable	• Not Applicable

P-3: Percent Missed Installation Appointments

Definition

"Percent missed installation appointments" monitors the reliability of BellSouth commitments with respect to committed due dates to assure that the CLEC can reliably quote expected due dates to their retail customer as compared to BellSouth. This measure is the percentage of total orders processed for which BellSouth is unable to complete the service orders on the committed due dates and reported for Total misses and End User Misses.

Exclusions

- Canceled Service Orders
- Order Activities of BellSouth or the CLEC associated with internal or administrative use of local services (Record Orders, Listing Orders Test Orders, etc.)
- Disconnect (D) & From (F) orders
- End User Misses on Local Interconnection Trunks

Business Rules

Percent Missed Installation Appointments (PMI) is the percentage of orders with completion dates in the reporting period that are past the original committed due date. Missed Appointments caused by end-user reasons will be included and reported separately. The first commitment date on the service order that is a missed appointment is the missed appointment code used for calculation whether it is a BellSouth missed appointment or an End User missed appointment. The "due date" is any time on the confirmed due date. Which means there cannot be a cutoff time for commitments, as certain types of orders are requested to be worked after standard business hours. Also, during Daylight Savings Time, field technicians are scheduled until 9PM in some areas and the customer is offered a greater range of intervals from which to select.

Calculation

Percent Missed Installation Appointments = (a / b) X 100

- a = Number of Orders with Completion date in Reporting Period past the Original Committed Due Date
- b = Number of Orders Completed in Reporting Period

Report Structure

- CLEC Specific
- CLEC Aggregate
- BellSouth Aggregate
- Report in Categories of <10 lines/circuits >= 10 lines/circuits (except trunks)
- Dispatch/No Dispatch

Report Explanation: The difference between End User MA and Total MA is the result of BellSouth caused misses. Here, Total MA is the total percent of orders missed either by BellSouth or CLEC end user. The End User MA represents the percentage of orders missed by the CLEC or their end user.

Data Retained

Relating to CLEC Experience	Relating to BellSouth Performance
• Report Month • CLEC Order Number and PON (PON) • Committed Due Date (DD) • Completion Date (CMPLTN DD) • Status Type • Status Notice Date • Standard Order Activity • Geographic Scope **Note:** Code in parentheses is the corresponding header found in the raw data file.	• Report Month • BellSouth Order Number • Committed Due Date (DD) • Completion Date (CMPLTN DD) • Status Type • Status Notice Date • Standard Order Activity • Geographic Scope

SQM Disaggregation - Analog/Benchmark

SQM LEVEL of Disaggregation	SQM Analog/Benchmark
• Resale Residence	• Retail Residence
• Resale Business	• Retail Business
• Resale Design	• Retail Design
• Resale PBX	• Retail PBX
• Resale Centrex	• Retail Centrex
• Resale ISDN	• Retail ISDN
• LNP (Standalone)	• Retail Residence and Business (POTS)
• INP (Standalone)	• Retail Residence and Business (POTS)
• 2W Analog Loop Design	• Retail Residence and Business Dispatch
• 2W Analog Loop Non-Design - Dispatch - Non-Dispatch (Dispatch In)	• Retail Residence and Business - (POTS Excluding Switch-Based Orders) - Dispatch - Non-Dispatch (Dispatch In)
• 2W Analog Loop With LNP Design	• Retail Residence and Business Dispatch
• 2W Analog Loop With LNP Non-Design - Dispatch - Non-Dispatch (Dispatch In)	• Retail Residence and Business - (POTS Excluding Switch-Based Orders) - Dispatch - Non-Dispatch (Dispatch In)
• 2W Analog Loop With INP Design	• Retail Residence and Business Dispatch
• 2W Analog Loop With INP Non-Design - Dispatch - Non-Dispatch (Dispatch In)	• Retail Residence and Business (POTS Excluding Switch-Based Orders) - Dispatch - Non-Dispatch (Dispatch In)
• UNE Digital Loop < DS1	• Retail Digital Loop < DS1
• UNE Digital Loop >= DS1	• Retail Digital Loop >= DS1
• UNE Loop + Port Combinations - Dispatch Out - Non-Dispatch - Dispatch In - Switch-Based	• Retail Residence and Business - Dispatch Out - Non-Dispatch - Dispatch In - Switch-Based
• UNE Switch Ports	• Retail Residence and Business (POTS)
• UNE Combo Other - Dispatch - Non-Dispatch (Dispatch In)	• Retail Residence, Business and Design Dispatch (Including Dispatch Out and Dispatch In) - Dispatch - Non-Dispatch (Dispatch In)
• UNE xDSL (HDSL, ADSL and UCL)	• ADSL Provided to Retail
• UNE ISDN	• Retail ISDN - BRI
• UNE Line Sharing	• ADSL Provided to Retail
• UNE Other Design	• Retail Design
• UNE Other Non - Design	• Retail Residence and Business
• Local Transport (Unbundled Interoffice Transport)	• Retail DS1/DS3 Interoffice
• Local Interconnection Trunks	• Parity with Retail

SEEM Measure

SEEM Measure		
Yes	Tier I	X
	Tier II	X

SEEM Disaggregation - Analog/Benchmark

SEEM Disaggregation	SEEM Analog/Benchmark
• Resale POTS	• Retail Residence and Business (POTS)
• Resale Design	• Retail Design
• UNE Loop + Port Combinations	• Retail Residence and Business
• UNE Loops	• Retail Residence and Business Dispatch
• UNE xDSL	• ADSL Provided to Retail
• UNE Line Sharing	• ADSL Provided to Retail
• Local Interconnection Trunks	• Parity with Retail

P-4: Average Completion Interval (OCI) & Order Completion Interval Distribution

Definition

The "average completion interval" measure monitors the interval of time it takes BellSouth to provide service for the CLEC or its own customers. The "Order Completion Interval Distribution" provides the percentages of orders completed within certain time periods. This report measures how well BellSouth meets the interval offered to customers on service orders.

Exclusions

- Canceled Service Orders
- Order Activities of BellSouth or the CLEC associated with internal or administrative use of local services (Record Orders, Listing Orders, Test Orders, etc.)
- Disconnect (D&F) orders (Except "D" orders associated with LNP Standalone)
- "L" Appointment coded orders (where the customer has requested a later than offered interval)

Business Rules

The actual completion interval is determined for each order processed during the reporting period. The completion interval is the elapsed time from when BellSouth issues a FOC or SOCS date time stamp receipt of an order from the CLEC to BellSouth's actual order completion date. This includes all delays for BellSouth's CLEC/End Users. The clock starts when a valid order number is assigned by SOCS and stops when the technician or system completes the order in SOCS. Elapsed time for each order is accumulated for each reporting dimension. The accumulated time for each reporting dimension is then divided by the associated total number of orders completed. Orders that are worked on zero due dates are calculated with a .33-day interval (8 hours) in order to report a portion of a day interval. These orders are issued and worked/completed on the same day. They can be either flow through orders (no field work-non-dispatched) or field orders (dispatched).

The interval breakout for UNE and Design is: 0-5 = 0-4.99, 5-10 = 5-9.99, 10-15 = 10-14.99, 15-20 = 15- 19.99, 20-25 = 20-24.99, 25-30 = 25-29.99, >= 30 = 30 and greater.

Calculation

Completion Interval = (a - b)

- a = Completion Date
- b = Order Issue Date

Average Completion Interval = (c / d)

- c = Sum of all Completion Intervals
- d = Count of Orders Completed in Reporting Period

Order Completion Interval Distribution (for each interval) = (e / f) X 100

- e = Service Orders Completed in "X" days
- f = Total Service Orders Completed in Reporting Period

Report Structure

- CLEC Specific
- CLEC Aggregate
- BellSouth Aggregate
- Dispatch / No Dispatch categories applicable to all levels except trunks
- Residence & Business reported in day intervals = 0, 1, 2, 3, 4, 5, 5+
- UNE and Design reported in day intervals = 0-5, 5-10, 10-15, 15-20, 20-25, 25-30,>= 30
- All Levels are reported <10 line/circuits; >= 10 line/circuits (except trunks)
- ISDN Orders included in Non-Design

Data Retained

Relating to CLEC Experience	Relating to BellSouth Performance
• Report Month • CLEC Company Name • Order Number (PON)	• Report Month • BellSouth Order Number

• Application Date & Time (TICKET_ID) • Completion Date (CMPLTN_DT) • Service Type (CLASS_SVC_DESC) • Geographic Scope **Note:** Code in parentheses is the corresponding header found in the raw data file.	• Application Date & Time • Order Completion Date & Time • Service Type • Geographic Scope

SQM Disaggregation - Analog/Benchmark

SQM Level of Disaggregation	SQM Analog/Benchmark
• Resale Residence	• Retail Residence
• Resale Business	• Retail Business
• Resale Design	• Retail Design
• Resale PBX	• Retail PBX
• Resale Centrex	• Retail Centrex
• Resale ISDN	• Retail ISDN
• LNP (Standalone)	• Retail Residence and Business (POTS)
• INP (Standalone)	• Retail Residence and Business (POTS)
• 2W Analog Loop Design	• Retail Residence and Business Dispatch
• 2W Analog Loop Non-Design - Dispatch - Non-Dispatch (Dispatch In)	• Retail Residence and Business - (POTS Excluding Switch-Based Orders) - Dispatch - Non-Dispatch (Dispatch In)
• 2W Analog Loop With LNP Design	• Retail Residence and Business Dispatch
• 2W Analog Loop With LNP Non-Design - Dispatch - Non-Dispatch (Dispatch In)	• Retail Residence and Business - (POTS Excluding Switch-Based Orders) - Dispatch - Non-Dispatch (Dispatch In)
• 2W Analog Loop With INP Design	• Retail Residence and Business Dispatch
• 2W Analog Loop With INP Non-Design - Dispatch - Non-Dispatch (Dispatch In)	• Retail Residence and Business - (POTS Excluding Switch-Based Orders) - Dispatch - Non-Dispatch (Dispatch In)
• UNE Digital Loop < DS1	• Retail Digital Loop < DS1
• UNE Digital Loop >= DS1	• Retail Digital Loop >= DS1
• UNE Loop + Port Combinations - Dispatch Out - Non-Dispatch - Dispatch In - Switch-Based	• Retail Residence and Business - Dispatch Out - Non-Dispatch - Dispatch In - Switch-Based
• UNE Switch Ports	• Retail Residence and Business (POTS)
• UNE Combo Other - Dispatch - Non-Dispatch (Dispatch In)	• Retail Residence, Business and Design Dispatch (Including Dispatch Out and Dispatch In) - Dispatch - Non-Dispatch (Dispatch In)
• UNE xDSL (HDSL, ADSL and UCL) without conditioning	• 7 Days
• UNE xDSL (HDSL, ADSL and UCL) with conditioning	• 14 Days
• UNE ISDN	• Retail ISDN BRI
• UNE Line Sharing	• ADSL Provided to Retail
• UNE Other Design	• Retail Design
• UNE Other Non-Design	• Retail Residence and Business
• Local Transport (Unbundled Interoffice Transport)	• Retail DS1/DS3 Interoffice
• Local Interconnection Trunks	• Parity with Retail

SEEM Measure

SEEM Measure		
Yes	Tier I	X
	Tier II	X

SEEM Disaggregation - Analog/Benchmark

SEEM Disaggregation	SEEM Analog/Benchmark
• Resale POTS	• Retail Residence and Business (POTS)
• Resale Design	• Retail Design
• UNE Loop + Port Combinations	• Retail Residence and Business
• UNE Loops	• Retail Residence and Business Dispatch
• UNE xDSL without conditioning	• 7 Days
• UNE xDSL with conditioning	• 14 Days
• UNE Line Sharing	• ADSL Provided to Retail
• Local Interconnection Trunks	• Parity with Retail

P-5: Average Completion Notice Interval

Definitions

The Completion Notice Interval is the elapsed time between the BellSouth reported completion of work and the issuance of a valid completion notice to the CLEC.

Exclusions

- Cancelled Service Orders
- Order Activities of BellSouth or the CLEC associated with internal or administrative use of local services (Record Orders, Listing Orders, Test Orders, etc.)
- D&F orders (Exception: "D" orders associated with LNP Standalone)

Business Rules

Measurement on interval of completion date and time entered by a field technician on dispatched orders, and 5PM start time on the due date for non-dispatched orders; to the release of a notice to the CLEC/BellSouth of the completion status. The field technician notifies the CLEC the work was complete and then he/she enters the completion time stamp information in his/her computer. This information switches through to the SOCS systems either completing the order or rejecting the order to the Work Management Center (WMC). If the completion is rejected, it is manually corrected and then completed by the WMC. The notice is returned on each individual order.

The start time for all orders is the completion stamp either by the field technician or the 5PM due date stamp; the end time for mechanized orders is the time stamp the notice was transmitted to the CLEC interface (LENS, EDI, OR TAG). For non-mechanized orders the end timestamp will be timestamp of order update to C-SOTS system.

Calculation

Completion Notice Interval = (a - b)

- a = Date and Time of Notice of Completion
- b = Date and Time of Work Completion

Average Completion Notice Interval = c / d

- c = Sum of all Completion Notice Intervals
- d = Number of Orders with Notice of Completion in Reporting Period

Report Structure

- CLEC Specific
- CLEC Aggregate
- BellSouth Aggregate
- Mechanized Orders
- Non-Mechanized Orders
- Reporting intervals in Hours; 0, 1-2, 2-4, 4-8, 8-12, 12-24, >= 24 plus Overall Average Hour Interval (The categories are inclusive of these time intervals: 0-1 = 0.99; 1-2 =1-1.99; 2-4 = 2-3.99, etc.)
- Reported in categories of <10 line/circuits; >= 10 line/circuits (except trunks)

Data Retained

Relating to CLEC Experience	Relating to BellSouth Performance
• Report Month • CLEC Order Number (so_nbr) • Work Completion Date (cmpltn_dt) • Work Completion Time • Completion Notice Availability Date • Completion Notice Availability Time • Service Type • Geographic Scope **Note:** Code in parentheses is the corresponding header found	• Report Month • BellSouth Order Number (so_nbr) • Work Completion Date (cmpltn_dt) • Work Completion Time • Completion Notice Availability Date • Completion Notice Availability Time • Service Type • Geographic Scope **NOTE:** Code in parentheses is the corresponding header

in the raw data file.	found in the raw data file.

SQM Disaggregation - Analog/Benchmark

SQM Level of Disaggregation	SQM Analog/Benchmark
• Resale Residence	• Retail Residence
• Resale Business	• Retail Business
• Resale Design	• Retail Design
• Resale PBX	• Retail PBX
• Resale Centrex	• Retail Centrex
• Resale ISDN	• Retail ISDN
• LNP (Standalone)	• Retail Residence and Business (POTS)
• INP (Standalone)	• Retail Residence and Business (POTS)
• 2W Analog Loop Design	• Retail Residence and Business Dispatch
• 2W Analog Loop Non-Design - Dispatch - Non-Dispatch (Dispatch In)	• Retail Residence and Business - (POTS Excluding Switch-Based Orders) - Dispatch - Non-Dispatch (Dispatch In)
• 2W Analog Loop With LNP Design	• Retail Residence and Business Dispatch
• 2W Analog Loop With LNP Non-Design - Dispatch - Non-Dispatch (Dispatch In)	• Retail Residence and Business - (POTS Excluding Switch-Based Orders) - Dispatch - Non-Dispatch (Dispatch In)
• 2W Analog Loop With INP Design	• Retail Residence and Business Dispatch
• 2W Analog Loop With INP Non-Design - Dispatch - Non-Dispatch (Dispatch In)	• Retail Residence and Business (POTS Excluding Switch-Based Orders) - Dispatch - Non-Dispatch (Dispatch In)
• UNE Digital Loop < DS1	• Retail Digital Loop < DS1
• UNE Digital Loop >= DS1	• Retail Digital Loop >= DS1
• UNE Loop + Port Combinations - Dispatch Out - Non-Dispatch - Dispatch In - Switch-Based	• Retail Residence and Business - Dispatch Out - Non-Dispatch - Dispatch In - Switch-Based
• UNE Switch Ports	• Retail Residence and Business (POTS)
• UNE Combo Other - Dispatch - Non-Dispatch (Dispatch In)	• Retail Residence, Business and Design Dispatch (Including Dispatch Out and Dispatch In) - Dispatch - Non-Dispatch (Dispatch In)
• UNE xDSL (HDSL, ADSL and UCL)	• ADSL Provided to Retail
• UNE ISDN	• Retail ISDN BRI
• UNE Line Sharing	• ADSL Provided to Retail
• UNE Other Design	• Retail Design
• UNE Other Non-Design	• Retail Residence and Business
• Local Transport (Unbundled Interoffice Transport)	• Retail DS1/DS3 Interoffice
• Local Interconnection Trunks	• Parity with Retail

SEEM Measure

SEEM Measure		
No	Tier I	
	Tier II	

SEEM Disaggregation - Analog/Benchmark

SEEM Disaggregation	SEEM Analog/Benchmark
• Not Applicable	• Not Applicable

P-6: % Completions/Attempts without Notice or < 24 hours Notice

Definition

This Report measures the interval from the FOC end timestamp on the LSR until 5:00 P.M. on the original committed due date of a service order. The purpose of this measure is to report if BellSouth is returning a FOC to the CLEC in time for the CLEC to notify their customer of the scheduled date.

Exclusions

"0" dated orders or any request where the subscriber requested an earlier due date of < 24 hours prior to the original commitment date, or any LSR received < 24 hours prior to the original commitment date.

Business Rules

For CLEC Results:

Calculation would exclude any successful or unsuccessful service delivery where the CLEC was informed at least 24 hours in advance. BellSouth may also exclude from calculation any LSRs received from the requesting CLEC with less than 24 hour notice prior to the commitment date.

For BellSouth Results:

BellSouth does not provide a FOC to its retail customers.

Calculation

Percent Completions or Attempts without Notice or with Less Than 24 Hours Notice = (a / b) X 100

- a = Completion Dispatches (Successful and Unsuccessful) With No FOC or FOC Received < 24 Hours of original Committed Due Date
- b = All Completions

Report Structure

- CLEC Specific
- CLEC Aggregate
- Dispatch /Non-Dispatch
- Total Orders FOC < 24 Hours
- Total Completed Service Orders
- % FOC < 24 Hours

Data Retained

Relating to CLEC Experience	Relating to BellSouth Performance
• Committed Due Date (DD) • FOC End Timestamp • Report Month • CLEC Order Number and PON • Geographic Scope - State / Region	• Not Applicable

SQM Disaggregation - Analog/Benchmark

SQM Level of Disaggregation	SQM Analog/Benchmark
• Resale Residence • Resale Business • Resale Design • Resale PBX • Resale Centrex • Resale ISDN • LNP (Standalone) • INP (Standalone) • 2W Analog Loop Design • 2W Analog Loop Non-Design • 2W Analog Loop With LNP-Design • 2W Analog Loop With LNP Non-Design • 2W Analog Loop With INP-Design • 2W Analog Loop With INP Non-Design • UNE Digital Loop < DS1 • UNE Digital Loop >=DS1 • UNE Loop + Port Combinations • UNE Switch ports • UNE Combo Other • UNE xDSL (HDSL, ADSL and UCL) • UNE ISDN • UNE Line Sharing • UNE Other Design • UNE Other Non -Design • Local Transport (Unbundled Interoffice Transport) • Local Interconnection Trunks	• Diagnostic

SEEM Measure

SEEM Measure		
No	Tier I	
	Tier II	

SEEM Disaggregation - Analog/Benchmark

SEEM Disaggregation	SEEM Analog/Benchmark
• Not Applicable	• Not Applicable

P-7: Coordinated Customer Conversions Interval

Definition

This report measures the average time it takes BellSouth to disconnect an unbundled loop from the BellSouth switch and cross connect it to CLEC equipment. This measurement applies to service orders with INP and with LNP, and where the CLEC has requested BellSouth to provide a coordinated cut over.

Exclusions

- Any order canceled by the CLEC will be excluded from this measurement
- Delays due to CLEC following disconnection of the unbundled loop
- Unbundled Loops where there is no existing subscriber loop and loops where coordination is not requested

Business Rules

When the service order includes INP, the interval includes the total time for the cut over including the translation time to place the line back in service on the ported line. When the service order includes LNP, the interval only includes the total time for the cut over (the port of the number is controlled by the CLEC). The interval is calculated for the entire cut over time for the service order and then divided by items worked in that time to give the average per-item interval for each service order.

Calculation

Coordinated Customer Conversions Interval = (a - b)

- a = Completion Date and Time for Cross Connection of a Coordinated Unbundled Loop
- b = Disconnection Date and Time of an Coordinated Unbundled Loop

Percent Coordinated Customer Conversions (for each interval) = (c / d) X 100

- c = Total number of Coordinated Customer Conversions for each interval
- d = Total Number of Unbundled Loop with Coordinated Conversions (items) for the reporting period

Report Structure

- CLEC Specific
- CLEC Aggregate
- The interval breakout is 0-5 = 0-4.99, 5-15 = 5-14.99, >=15 = 15 and greater, plus Overall Average Interval.

Data Retained

Relating to CLEC Experience	Relating to BellSouth Performance
• Report Month • CLEC Order Number • Committed Due Date (DD) • Service Type (CLASS_SVC_DESC) • Cut over Start Time • Cut over Completion Time • Portability Start and Completion Times (INP orders) • Total Conversions (Items) **Note:** Code in parentheses is the corresponding header found in the raw data file.	• No BellSouth Analog Exists

SQM Disaggregation - Analog/Benchmark

SQM Level of Disaggregation	SQM Analog/Benchmark
• Unbundled Loops with INP/LNP • Unbundled Loops without INP/LNP	• 95% <= 15 minutes

SEEM Measure

SEEM Measure		
Yes	Tier I	X
	Tier II	X

SEEM Disaggregation - Analog/Benchmark

SEEM Disaggregation	SEEM Analog/Benchmark
• Unbundled Loops	• 95% <= 15 minutes

P-7A: Coordinated Customer Conversions – Hot Cut Timeliness% Within Interval and Average Interval

Definition

This category measures whether BellSouth begins the cut over of an unbundled loop on a coordinated and/or a time specific order at the CLEC requested start time. It measures the percentage of orders where the cut begins within 15 minutes of the requested start time of the order and the average interval.

Exclusions

- Any order canceled by the CLEC will be excluded from this measurement
- Delays caused by the CLEC
- Unbundled Loops where there is no existing subscriber loop and loops where coordination is not requested
- All unbundled loops on multiple loop orders after the first loop

Business Rules

This report measures whether BellSouth begins the cut over of an unbundled loop on a coordinated and/or a time specific order at the CLEC requested start time. The cut is considered on time if it starts 15 minutes before or after the requested start time. Using the scheduled time and the actual cut over start time, the measurement will calculate the percent within interval and the average interval. If a cut involves multiple lines, the cut will be considered "on time" if the first line is cut within the interval. <= 15 minutes includes intervals that began 15:00 minutes or less before the scheduled cut time and cuts that began 15 minutes or less after the scheduled cut time; >15 minutes, <= 30 minutes includes cuts within 15:00 – 30:00 minutes either prior to or after the scheduled cut time; >30 minutes includes cuts greater than 30:00 minutes either prior to or after the scheduled cut time.

Calculation

% within Interval = (a / b) X 100

- a = Total Number of Coordinated Unbundled Loop Orders for the interval
- b = Total Number of Coordinated Unbundled Loop Orders for the reporting period

Interval = (c - d)

- c = Scheduled Time for Cross Connection of a Coordinated Unbundled Loop Order
- d = Actual Start Date and Time of a Coordinated Unbundled Loop Order

Average Interval = (e / f)

- Sum of all Intervals
- Total Number of Coordinated Unbundled Loop Orders for the reporting period.

Report Structure

- CLEC Specific
- CLEC Aggregate

  Reported in intervals of early, on time and late cuts % <=15 minutes; % >15 minutes, <= 30 minutes; % > 30 minutes, plus Overall Average Interval.

Data Retained

Relating to CLEC Experience	Relating to BellSouth Performance
• Report Month • CLEC Order Number (so_nbr) • Committed Due Date (DD) • Service Type (CLASS_SVC_DESC) • Cut over Scheduled Start Time • Cut over Actual Start Time • Total Conversions Orders **Note:** Code in parentheses is the corresponding header found in the raw data file.	• No BellSouth Analog exists

SQM Disaggregation - Analog/Benchmark

SQM Level of Disaggregation	SQM Analog/Benchmark
• Product Reporting Level - SL1 Time Specific - SL1 Non-Time Specific - SL2 Time Specific - SL2 Non-Time Specific	• 95% Within + or – 15 minutes of Scheduled Start Time

SEEM Measure

SEEM Measure		
Yes	Tier I	X
	Tier II	X

SEEM Disaggregation - Analog/Benchmark

SEEM Disaggregation	SEEM Analog/Benchmark
• UNE Loops	• 95% Within + or – 15 minutes of Scheduled Start time

P-7B: Coordinated Customer Conversions – Average Recovery Time

Definition

Measures the time between notification and resolution by BellSouth of a service outage found that can be isolated to the BellSouth side of the network. The time between notification and resolution by BellSouth must be measured to ensure that CLEC customers do not experience unjustifiable lengthy service outages during a Coordinated Customer Conversion. This report measures outages associated with Coordinated Customer Conversions prior to service order completion.

Exclusions

- Cut overs where service outages are due to CLEC caused reasons
- Cut overs where service outages are due to end-user caused reasons

Business Rules

Measures the outage duration time related to Coordinated Customer Conversions from the initial trouble notification until the trouble has been restored and the CLEC has been notified. The duration time is defined as the time from the initial trouble notification until the trouble has been restored and the CLEC has been notified. The interval is calculated on the total outage time for the circuits divided by the total number of outages restored during the report period to give the average outage duration.

Calculation

Recovery Time = (a - b)

- a = Date & Time That Trouble is Closed by CLEC
- b = Date & Time Initial Trouble is Opened with BellSouth

Average Recovery Time = (c / d)

- c = Sum of all the Recovery Times
- d = Number of Troubles Referred to the BellSouth

Report Structure

- CLEC Specific
- CLEC Aggregate

Data Retained

Relating to CLEC Experience	Relating to BellSouth Performance
• Report Month • CLEC Company Name • CLEC Order Number (so_nbr) • Committed Due Date (DD) • Service Type (CLASS_SVC_DESC) • CLEC Acceptance Conflict (CLEC_CONFLICT) • CLEC Conflict Resolved (CLEC_RESOLVE) • CLEC Conflict MFC (CLEC_CONFLICT_MFC) • Total Conversion Orders **Note:** Code in parentheses is the corresponding header found in the raw data file.	• None

SQM Disaggregation - Analog/Benchmark

SQM Level of Disaggregation	SQM Analog/Benchmark
• Unbundled Loops with INP/LNP • Unbundled Loops without INP/LNP	• Diagnostic

SEEM Measure

SEEM Measure		
No	Tier I	
	Tier II	

SEEM Disaggregation - Analog/Benchmark

SEEM Disaggregation	SEEM Analog/Benchmark
• Not Applicable	• Not Applicable

P-7C: Hot Cut Conversions - % Provisioning Troubles Received Within 7 days of a completed Service Order

Definition

Percent Provisioning Troubles received within 7 days of a completed service order associated with a Coordinated and Non-Coordinated Customer Conversion. Measures the quality and accuracy of Hot Cut Conversion Activities.

Exclusions

- Any order canceled by the CLEC
- Troubles caused by Customer Provided Equipment

Business Rules

Measures the quality and accuracy of completed service orders associated with Coordinated and Non-Coordinated Hot Cut Conversions. The first trouble report received on a circuit ID within 7 days following a service order completion is counted in this measure. Subsequent trouble reports are measured in Repeat Report Rate. Reports are calculated searching in the prior report period for completed Coordinated and Non-Coordinated Hot Cut Conversion service orders and following 7 days after the completion of the service order for a trouble report issue date.

Calculation

% Provisioning Troubles within 7 days of service order completion = (a / b) X 100

- a = The sum of all Hot Cut Circuits with a trouble within 7 days following service order(s) completion
- b = The total number of Hot Cut service order circuits completed in the previous report calendar month

Report Structure

- CLEC Specific
- CLEC Aggregate
- Dispatch/Non-Dispatch

Data Retained

Relating to CLEC Experience	Relating to BellSouth Performance
• Report Month • CLEC Order Number (so_nbr) • PON • Order Submission Date (TICKET_ID) • Order Submission Time (TICKET_ID) • Status Type • Status Notice Date • Standard Order Activity • Geographic Scope • Total Conversion Circuits **Note:** Code in parentheses is the corresponding header found in the raw data file.	• No BellSouth Analog Exists

SQM Disaggregation - Analog/Benchmark

SQM Level of Disaggregation	SQM Analog/Benchmark
• UNE Loop Design • UNE Loop Non-Design	• <= 5%

SEEM Measure

SEEM Measure		
Yes	Tier I	X
	Tier II	X

SEEM Disaggregation - Analog/Benchmark

SEEM Disaggregation	SEEM Analog/Benchmark
• UNE Loops	• <= 5%

P-8: Cooperative Acceptance Testing - % of xDSL Loops Tested

Definition

The loop will be considered cooperatively tested when the BellSouth technician places a call to the CLEC representative to initiate cooperative testing and jointly performs the tests with the CLEC.

Exclusions

- Testing failures due to CLEC (incorrect contact number, CLEC not ready, etc.)
- xDSL lines with no request for cooperative testing

Business Rules

When a BellSouth technician finishes delivering an order for an xDSL loop where the CLEC order calls for cooperative testing at the customer's premise, the BellSouth technician is to call a toll free number to the CLEC testing center. The BellSouth technician and the CLEC representative at the center then test the line. As an example of the type of testing performed, the testing center may ask the technician to put a short on the line so that the center can run a test to see if it can identify the short.

Calculation

Cooperative Acceptance Testing - % of xDSL Loops Tested = (a / b) X 100

- a = Total number of successful xDSL cooperative tests for xDSL lines where cooperative testing was requested in the reporting period
- b = Total Number of xDSL line tests requested by the CLEC and scheduled in the reporting period

Report Structure

- CLEC Specific
- CLEC Aggregate
- Type of Loop tested

Data Retained

Relating to CLEC Experience	Relating to BellSouth Performance
• Report Month • CLEC Company Name (OCN) • CLEC Order Number (so_nbr) and PON (PON) • Committed Due Date (DD) • Service Type (CLASS_SVC_DESC) • Acceptance Testing Completed (ACCEPT_TESTING) • Acceptance Testing Declined (ACCEPT_TESTING) • Total xDSL Orders **Note**: Code in parentheses is the corresponding header found in the raw data file.	• No BellSouth Analog Exists

SQM Disaggregation - Analog/Benchmark

SQM Level of Disaggregation:	SQM Analog/Benchmark:
• UNE xDSL - ADSL - HDSL - UCL - OTHER	• 95% of Lines Tested

SEEM Measure

SEEM Measure		
Yes	Tier I	X
	Tier II	X

SEEM Disaggregation - Analog/Benchmark

SEEM Disaggregation	SEEM Analog/Benchmark
• UNE xDSL	• 95% of Lines Tested

P-9: % Provisioning Troubles within 30 days of Service Order Completion

Definition

Percent Provisioning Troubles within 30 days of Service Order Completion measures the quality and accuracy of Service order activities.

Exclusions

- Canceled Service Orders
- Order Activities of BellSouth or the CLEC associated with internal or administrative use of local services (Record Orders, Listing Orders, Test Orders, etc.)
- D & F orders
- Trouble reports caused and closed out to Customer Provided Equipment (CPE)

Business Rules

Measures the quality and accuracy of completed orders. The first trouble report from a service order after completion is counted in this measure. Subsequent trouble reports are measured in Repeat Report Rate. Reports are calculated searching in the prior report period for completed service orders and following 30 days after completion of the service order for a trouble report issue date.

D & F orders are excluded as there is no subsequent activity following a disconnect.

Note: Standalone LNP historical data is not available in the maintenance systems (LMOS or WFA).

Calculation

% Provisioning Troubles within 30 days of Service Order Activity = (a / b) X 100

- a = Trouble reports on all completed orders 30 days following service order(s) completion
- b = All Service Orders completed in the previous report calendar month

Report Structure

- CLEC Specific
- CLEC Aggregate
- BellSouth Aggregate
- Reported in categories of <10 line/circuits; >= 10 line/circuits (except trunks)
- Dispatch / No Dispatch (except trunks)

Data Retained

Relating to CLEC Experience	Relating to BellSouth Performance
• Report Month • CLEC Order Number and PON • Order Submission Date (TICKET_ID) • Order Submission Time (TICKET_ID) • Status Type • Status Notice Date • Standard Order Activity • Geographic Scope **Note:** Code in parentheses is the corresponding header found in the raw data file.	• Report Month • BellSouth Order Number • Order Submission Date • Order Submission Time • Status Type • Status Notice Date • Standard Order Activity • Geographic Scope

SQM Disaggregation - Analog/Benchmark

SQM Level of Disaggregation	SQM Analog/Benchmark
• Resale Residence	• Retail Residence
• Resale Business	• Retail Business
• Resale Design	• Retail Design
• Resale PBX	• Retail PBX
• Resale Centrex	• Retail Centrex
• Resale ISDN	• Retail ISDN
• 2W Analog Loop Design	• Retail Residence and Business Dispatch
• 2W Analog Loop Non-Design - Dispatch - Non-Dispatch (Dispatch In)	• Retail Residence and Business - (POTS Excluding Switch-Based Orders) - Dispatch - Non-Dispatch (Dispatch In)
• 2W Analog Loop With LNP Design	• Retail Residence and Business Dispatch
• 2W Analog Loop With LNP Non-Design - Dispatch - Non-Dispatch (Dispatch In)	• Retail Residence and Business - (POTS Excluding Switch-Based Orders) - Dispatch - Non-Dispatch (Dispatch In)
• 2W Analog Loop With INP Design	• Retail Residence and Business Dispatch
• 2W Analog Loop With INP Non-Design - Dispatch - Non-Dispatch (Dispatch In)	• Retail Residence and Business (POTS - Excluding Switch-Based Orders) - Dispatch - Non-Dispatch (Dispatch In)
• UNE Digital Loop < DS1	• Retail Digital Loop < DS1
• UNE Digital Loop >= DS1	• Retail Digital Loop >= DS1
• UNE xDSL (HDSL, ADSL and UCL)	• ADSL provided to Retail
• UNE ISDN	• Retail ISDN BRI
• UNE Line Sharing	• ADSL Provided to Retail
• INP (Standalone)	• Retail Residence and Business (POTS)
• LNP (Standalone)	• Retail Residence and Business (POTS)
• UNE Loop + Port Combinations - Dispatch Out - Non-Dispatch - Dispatch In - Switch-Based	• Retail Residence and Business - Dispatch Out - Non-Dispatch - Dispatch In - Switch-Based
• UNE Switch Ports	• Retail Residence and Business (POTS)
• UNE Combo Other - Dispatch - Non-Dispatch (Dispatch In)	• Retail Residence, Business and Design Dispatch (Including Dispatch Out and Dispatch In) - Dispatch - Non-Dispatch (Dispatch In)
• Local Transport (Unbundled Interoffice Transport)	• Retail DS1/DS3 Interoffice
• UNE Other Non-Design	• Retail Residence and Business
• UNE Other Design	• Retail Design
• Local Interconnection Trunks	• Parity with Retail

SEEM Measure

SEEM Measure		
Yes	Tier I	X
	Tier II	X

SEEM Disaggregation - Analog/Benchmark

SEEM Disaggregation	SEEM Analog/Benchmark
• Resale POTS	• Retail Residence and Business (POTS)
• Resale Design	• Retail Design
• UNE Loop + Port Combinations	• Retail Residence and Business
• UNE Loops	• Retail Residence and Business Dispatch
• UNE xDSL	• ADSL Provided to Retail
• UNE Line Sharing	• ADSL Provided to Retail
• Local Interconnection Trunks	• Parity with Retail

P-10: Total Service Order Cycle Time (TSOCT)

Definition

This report measures the total service order cycle time from receipt of a valid service order request to the return of a completion notice to the CLEC Interface.

Exclusions

- Canceled Service Orders
- Order Activities of BellSouth or the CLEC associated with internal or administrative use of local services (Record Orders, Listing Orders, Test Orders, etc.)
- D (Disconnect - Except "D" orders associated with LNP Standalone.) and F (From) orders. (From is disconnect side of a move order when the customer moves to a new address)
- "L" Appointment coded orders (where the customer has requested a later than offered interval)
- Orders with CLEC/Subscriber caused delays or CLEC/Subscriber requested due date changes

Business Rules

The interval is determined for each order processed during the reporting period. This measurement combines three reports: FOC Timeliness, Average Order Completion Interval and Average Completion Notice Interval. For UNE XDSL Loop, this measurement combines Service Inquiry Interval (SI), FOC Timeliness, Average Completion Interval, and Average Completion Notice Interval.

This interval starts with the receipt of a valid service order request and stops when a completion notice is sent to the CLEC Interface (LENS, TAG OR EDI) and the BellSouth Legacy Systems. Elapsed time for each order is accumulated for each reporting dimension. The accumulated time for each reporting dimension is then divided by the associated total number of orders completed. Orders that are worked on zero due dates are calculated with a .33 day interval (8 hours) in order to report a portion of a day interval. These orders are issued and worked/completed on same day. They can be either flow through orders (no field work-non-dispatched) or field orders (dispatched).

Reporting is by Fully Mechanized, Partially Mechanized and Non-Mechanized receipt of LSRs.

Calculation

Total Service Order Cycle Time = (a - b)

- a = Service Order Completion Notice Date
- b = Service Request Receipt Date

Average Total Service Order Cycle Time = (c / d)

- c = Sum of all Total Service Order Cycle Times
- d = Total Number Service Orders Completed in Reporting Period

Total Service Order Cycle Time Interval Distribution (for each interval) = (e / f) X 100

- e = Total Number of Service Requests Completed in "X" minutes/hours
- f = Total Number of Service Requests Received in Reporting Period

Report Structure

- CLEC Specific
- CLEC Aggregate
- BellSouth Aggregate
- Fully Mechanized; Partially Mechanized; Non-Mechanized
- Report in categories of <10 line/circuits; >= 10 line/circuits (except trunks)
- Dispatch / No Dispatch categories applicable to all levels except trunks
- Intervals 0-5, 5-10, 10-15, 15-20, 20-25, 25-30, >= 30 Days. The interval breakout is: 0-5 = 0-4.99, 5-10 = 5-9.99, 10-15 = 10-14.99, 15-20 = 15-19.99, 20-25 = 20-24.99, 25-30 = 25-29.99, >= 30 = 30 and greater.

Data Retained

Relating to CLEC Experience	Relating to BellSouth Performance
• Report Month • Interval for FOC	• Report Month • BellSouth Order Number

• CLEC Company Name (OCN) • Order Number (PON) • Submission Date & Time (TICKET_ID) • Completion Date (CMPLTN_DT) • Completion Notice Date and Time • Service Type (CLASS_SVC_DESC) • Geographic Scope **Note:** Code in parentheses is the corresponding header found in the raw data file	• Order Submission Date & Time • Order Completion Date & Time • Service Type • Geographic Scope

SQM Disaggregation - Analog/Benchmark

SQM Level of Disaggregation	SQM Analog/Benchmark
• Resale Residence • Resale Business • Resale Design • Resale PBX • Resale Centrex • Resale ISDN • LNP (Standalone) • INP (Standalone) • 2W Analog Loop Design • 2W Analog Loop Non-Design • 2W Analog Loop With LNP Design • 2W Analog Loop With LNP Non-Design • UNE Switch Ports • UNE Loop + Port Combinations • UNE Combo Other • UNE xDSL (HDSL, ADSL and UCL) • UNE ISDN • UNE Line Sharing • UNE Other Design • UNE Other Non -Design • UNE Digital Loops < DS1 • UNE Digital Loops >= DS1 • Local Transport (Unbundled Interoffice Transport) • Local Interconnection Trunks	• Diagnostic

SEEM Measure

SEEM Measure		
No	Tier I	
	Tier II	

SEEM Disaggregation - Analog/Benchmark

SEEM Disaggregation	SEEM Analog/Benchmark
• Not Applicable	• Not Applicable

P-11: Service Order Accuracy

Definition

The "service order accuracy" measurement measures the accuracy and completeness of a sample of BellSouth service orders by comparing what was ordered and what was completed.

Exclusions

- Cancelled Service Orders
- Order Activities of BellSouth or the CLEC associated with internal or administrative use of local services (Record Orders, Listing Orders, Test Orders, etc.)
- D & F orders

Business Rules

A statistically valid sample of service orders, completed during a monthly reporting period, is compared to the original account profile and the order that the CLEC sent to BellSouth. An order is "completed without error" if all service attributes and account detail changes (as determined by comparing the original order) completely and accurately reflect the activity specified on the original order and any supplemental CLEC order. For both small and large sample sizes, when a Service Request cannot be matched with a corresponding Service Order, it will not be counted. For small sample sizes an effort will be made to replace the service request.

Calculation

Percent Service Order Accuracy = (a / b) X 100

- a = Orders Completed without Error
- b = Orders Completed in Reporting Period

Report Structure

- CLEC Aggregate
- Reported in categories of <10 line/circuits; >= 10 line/circuits
- Dispatch / No Dispatch

Data Retained

Relating to CLEC Experience	Relating to BellSouth Performance
• Report Month • CLEC Order Number and PON • Local Service Request (LSR) • Order Submission Date • Committed Due Date • Service Type • Standard Order Activity	• No BellSouth Analog Exist

SQM Disaggregation - Analog/Benchmark

SQM Level of Disaggregation	SQM Analog/Benchmark
• Resale Residence • Resale Business • Resale Design (Specials) • UNE Specials (Design) • UNE (Non-Design) • Local Interconnection Trunks	• 95% Accurate

SEEM Measure

SEEM Measure		
No	Tier I	
	Tier II	

SEEM Disaggregation - Analog/Benchmark

SEEM Disaggregation	SEEM Analog/Benchmark
• Not Applicable	• Not Applicable

P-12: LNP-Percent Missed Installation Appointments

Definition

"Percent missed installation appointments" monitors the reliability of BellSouth commitments with respect to committed due dates to assure that CLECs can reliably quote expected due dates to their retail customer as compared to BellSouth. This measure is the percentage of total orders processed for which BellSouth is unable to complete the service orders on the committed due dates and reported for total misses and End User Misses.

Exclusions

- Canceled Service Orders
- Order Activities of BellSouth or the CLEC associated with internal or administrative use of local services (Record Orders, Listing Orders, Test Orders, etc.) where identifiable

Business Rules

Percent Missed Installation Appointments (PMI) is the percentage of total orders processed for which BellSouth is unable to complete the service orders on the committed due dates. Missed Appointments caused by end-user reasons will be included and reported in a separate category. The first commitment date on the service order that is a missed appointment is the missed appointment code used for calculation whether it is a BellSouth missed appointment or an End User missed appointment. The "due date" is any time on the confirmed due date, which means there cannot be a cutoff time for commitments as certain types of orders are requested to be worked after standard business hours.

Calculation

LNP Percent Missed Installation Appointments = (a / b) X 100

- a = Number of Orders with Completion date in Reporting Period past the Original Committed Due Date
- b = Number of Orders Completed in Reporting Period

Report Structure

- CLEC Specific
- CLEC Aggregate
- Geographic Scope
  - State/Region
- Report in Categories of <10 lines/circuits >= 10 lines/circuits (except trunks)

Report explanation: Total Missed Appointments is the total percent of orders missed either by BellSouth or the CLEC end user. End User MA represents the percentage of orders missed by the CLEC end user. The difference between End User Missed Appointments and Total Missed Appointments is the result of BellSouth caused misses.

Data Retained

Relating to CLEC Experience	Relating to BellSouth Performance
• Report Month • CLEC Order Number and PON (PON) • Committed Due Date (DD) • Completion Date (CMPLTN DD) • Status Type • Status Notice Date • Standard Order Activity • Geographic Scope **Note:** Code in parentheses is the corresponding header found in the raw data file.	• Not Applicable

SQM Disaggregation - Analog/Benchmark

SQM Level of Disaggregation	SQM Analog/Benchmark
• LNP	• Retail Residence and Business (POTS)

SEEM Measure

SEEM Measure		
Yes	Tier I	X
	Tier II	X

SEEM Disaggregation - Analog/Benchmark

SEEM Disaggregation	SEEM Analog/Benchmark
• LNP	• 95% Due Dates Met[a]

[a]*Due to data structure issues, BellSouth is using a benchmark comparison for SEEM rather than the Truncated Z as stated in the Order.*

P-13: LNP-Average Disconnect Timeliness Interval & Disconnect Timeliness Interval Distribution

Definition

Disconnect Timeliness is defined as the interval between the time ESI Number Manager receives the valid 'Number Ported' message from NPAC (signifying the CLEC 'Activate') until the time the Disconnect is completed in the Central Office switch. This interval effectively measures BellSouth responsiveness by isolating it from impacts that are caused by CLEC related activities.

Exclusions

- Canceled Service Orders
- Order Activities of BellSouth or the CLEC associated with internal or administrative use of local services (Record Orders, Listing Orders, Test Orders, etc.) where identifiable.

Business Rules

The Disconnect Timeliness interval is determined for each telephone number ported associated with a disconnect service order processed on an LSR during the reporting period. The Disconnect Timeliness interval is the elapsed time from when BellSouth receives a valid 'Number Ported' message in ESI Number Manager (signifying the CLEC 'Activate') for each telephone number ported until each telephone number on the service order is disconnected in the Central Office switch. Elapsed time for each ported telephone number is accumulated for each reporting dimension. The accumulated time for each reporting dimension is then divided by the total number of selected telephone numbers disconnected in the reporting period.

Calculation

Disconnect Timeliness Interval = (a - b)

- a = Completion Date and Time in Central Office switch for each number on disconnect order
- b = Valid 'Number Ported' message received date & time

Average Disconnect Timeliness Interval = (c / d)

- c = Sum of all Disconnect Timeliness Intervals
- d = Total Number of disconnected numbers completed in reporting period

Disconnect Timeliness Interval Distribution (for each interval) = (e / f) X 100

- e = Disconnected numbers completed in "X" days
- f = Total disconnect numbers completed in reporting period

Report Structure

- CLEC Specific
- CLEC Aggregate
- Geographic Scope
  - State, Region

Data Retained

Relating to CLEC Experience	Relating to BellSouth Performance
• Order Number • Telephone Number/Circuit Number • Committed Due Date • Receipt Date/Time (ESI Number Manager) • Date/Time of Recent Change Notice	• Not Applicable

SQM Disaggregation - Analog/Benchmark

SQM Level of Disaggregation	SQM Analog/Benchmark
• LNP	• 95% <= 15 Minutes

SEEM Measure

SEEM Measure		
Yes	Tier I	X
	Tier II	X

SEEM Disaggregation - Analog/Benchmark

SEEM Disaggregation	SEEM Analog/Benchmark
• LNP Standalone	• 95% <= 15 Minutes

P-14: LNP-Total Service Order Cycle Time (TSOCT)

Definition

Total Service Order Cycle Time measures the interval from receipt of a valid service order request to the completion of the final service order associated with that service request.

Exclusions

- Canceled Service Orders
- Order Activities of BellSouth or the CLEC associated with internal or administrative use of local services (Record Orders, Listing Orders, Test Orders, etc.) where identifiable
- “L” appointment coded orders (indicating the customer has requested a later than offered interval)
- ”S” missed appointment coded orders (indicating subscriber missed appointments), except for “SP” codes (indicating subscriber prior due date requested). This would include “S” codes assigned to subsequent due date changes.

Business Rules

The interval is determined for each order processed during the reporting period. This measurement combines three reports: FOC Timeliness, Average Order Completion Interval and Average Completion Notice Interval.

This interval starts with the receipt of a valid service order request and stops when a completion notice is sent to the CLEC Interface (LENS, TAG OR EDI). Elapsed time for each order is accumulated for each reporting dimension. The accumulated time for each reporting dimension is then divided by the associated total number of orders completed. Orders that are worked on zero due dates are calculated with a .33 day interval (8 hours) in order to report a portion of a day interval. These orders are issued and worked/completed on the same day.

Reporting is by Fully Mechanized, Partially Mechanized and Non-Mechanized receipt of LSRs.

Calculation

Total Service Order Cycle Time = (a - b)

- a = Service Order Completion Notice Date
- b = Service Request Receipt Date

Average Total Service Order Cycle Time = (c / d)

- c = Sum of all Total Service Order Cycle Times
- d = Total Number Service Orders Completed in Reporting Period

Total Service Order Cycle Time Interval Distribution (for each interval) = (e / f) X 100

- e = Total Number of Service Orders Completed in “X” minutes/hours
- f = Total Number of Service Orders Received in Reporting Period

Report Structure

- CLEC Specific
- CLEC Aggregate
- Fully Mechanized; Partially Mechanized; Non-Mechanized
- Report in categories of < 10 lines/circuits; >= lines/circuits (except trunks)
- Intervals 0-5, 5-10, 10-15, 15-20, 20-25, 25-30, >= 30 Days. The interval breakout is: 0-5 = 0-4.99, 5-10 = 5-9.99, 10-15 = 10-14.99, 15-20 = 15-19.99, 20-25 = 20-24.99, 25-30 = 25-29.99, >= 30 = 30 and greater.

Data Retained

Relating to CLEC Experience	Relating to BellSouth Performance
• Report Month • Interval for FOC • CLEC Company Name (OCN) • Order Number (PON) • Submission Date & Time (TICKET_ID) • Completion Date (CMPLTN_DT) • Completion Notice Date and Time	• Not Applicable

• Service Type (CLASS_SVC_DESC) • Geographic Scope **Note:** Code in parentheses is the corresponding header found in the raw data file	

SQM Disaggregation - Analog/Benchmark

SQM Level of Disaggregation	SQM Analog/Benchmark
• LNP	• Diagnostic

SEEM Measure

SEEM Measure		
No	Tier I	
	Tier II	

SEEM Disaggregation - Analog/Benchmark

SEEM Disaggregation	SEEM Analog/Benchmark
• Not Applicable	• Not Applicable

Section 4: Section 4: Maintenance & Repair

M&R-1: Missed Repair Appointments

Definition

The percent of trouble reports not cleared by the committed date and time.

Exclusions

- Trouble tickets canceled at the CLEC request
- BellSouth trouble reports associated with internal or administrative service
- Customer Provided Equipment (CPE) troubles or CLEC Equipment Trouble

Business Rules

The negotiated commitment date and time is established when the repair report is received. The cleared time is the date and time that BellSouth personnel clear the trouble and closes the trouble report in his/her Computer Access Terminal (CAT) or workstation. If this is after the Commitment time, the report is flagged as a "Missed Commitment" or a missed repair appointment. When the data for this measure is collected for BellSouth and a CLEC, it can be used to compare the percentage of the time repair appointments are missed due to BellSouth reasons. (No access reports are not part of this measure because they are not a missed appointment.)

Note: Appointment intervals vary with force availability in the POTS environment. Specials and Trunk intervals are standard interval appointments of no greater than 24 hours. Standalone LNP historical data is not available in the maintenance systems (LMOS or WFA).

Calculation

Percentage of Missed Repair Appointments = (a / b) X 100

- a = Count of Customer Troubles Not Cleared by the Quoted Commitment Date and Time
- b = Total Trouble reports closed in Reporting Period

Report Structure

- Dispatch/Non-Dispatch
- CLEC Specific
- CLEC Aggregate
- BellSouth Aggregate

Data Retained

Relating to CLEC Experience	Relating to BellSouth Performance
• Report Month • CLEC Company Name • Submission Date & Time (TICKET_ID) • Completion Date (CMPLTN_DT) • Service Type (CLASS_SVC_DESC) • Disposition and Cause (CAUSE_CD & CAUSE_DESC) • Geographic Scope **Note**: Code in parentheses is the corresponding header found in the raw data file.	• Report Month • BellSouth Company Code • Submission Date & Time • Completion Date • Service Type • Disposition and Cause (Non-Design /Non-Special Only) • Trouble Code (Design and Trunking Services) • Geographic Scope

SQM Disaggregation - Analog/Benchmark

SQM Level of Disaggregation	SQM Analog/Benchmark
• Resale Residence	• Retail Residence
• Resale Business	• Retail business
• Resale Design	• Retail Design
• Resale PBX	•
• Resale Centrex	• Retail Centrex
• Resale ISDN	• Retail ISDN
• LNP (Standalone) (Not Available in Maintenance)	• Not Applicable
• 2W Analog Loop Design	• Retail Residence & Business Dispatch
• 2W Analog Loop Non - Design	• Retail Residence & Business (POTS) (Exclusion of Switch-Based Feature Troubles)
• UNE Loop + Port Combinations	• Retail Residence & Business
• UNE Switch Ports	• Retail Residence & Business (POTS)
• UNE Combo Other	• Retail Residence, Business and Design Dispatch
• UNE xDSL (HDSL, ADSL and UCL)	• ADSL Provided to Retail
• UNE ISDN	• Retail ISDN – BRI
• UNE Line Sharing	• ADSL Provided to Retail
• UNE Other Design	• Retail Design
• UNE Other Non - Design	• Retail Residence & Business
• Local Interconnection Trunks	• Parity with Retail
• Local Transport (Unbundled Interoffice Transport)	• Retail DS1/DS3 Interoffice

SEEM Measure

SEEM Measure		
Yes	Tier I	X
	Tier II	X

SEEM Disaggregation - Analog/Benchmark

SEEM Disaggregation	SEEM Analog/Benchmark
• Resale POTS	• Retail Residence and Business (POTS)
• Resale Design	• Retail Design
• UNE Loop + Port Combinations	• Retail Residence and Business
• UNE Loops	• Retail Residence and Business Dispatch
• UNE xDSL	• ADSL Provided to Retail
• UNE Line Sharing	• ADSL Provided to Retail
• Local Interconnection Trunks	• Parity with Retail

M&R-2: Customer Trouble Report Rate

Definition

Percent of initial and repeated customer direct or referred troubles reported within a calendar month per 100 lines/circuits in service.

Exclusions

- Trouble tickets canceled at the CLEC request
- BellSouth trouble reports associated with internal or administrative service
- Customer Provided Equipment (CPE) troubles or CLEC Equipment Trouble

Business Rules

Customer Trouble Report Rate is computed by accumulating the number of maintenance initial and repeated trouble reports during the reporting period. The resulting number of trouble reports are divided by the total "number of service" lines, ports or combination that exist for the CLECs and BellSouth respectively at the end of the report month.

Calculation

Customer Trouble Report Rate = (a / b) X 100

- a = Count of Initial and Repeated Trouble Reports closed in the Current Period
- b = Number of Service Access Lines in service at End of the Report Period

Report Structure

- Dispatch/Non-Dispatch
- CLEC Specific
- CLEC Aggregate
- BellSouth Aggregate

Data Retained

Relating to CLEC Experience	Relating to BellSouth Performance
• Report Month • CLEC Company Name • Ticket Submission Date & Time (TICKET_ID) • Ticket Completion Date (CMPLTN_DT) • Service Type (CLASS_SVC_DESC) • Disposition and Cause (CAUSE_CD & CAUSE_DESC) • # Service Access Lines in Service at the end of period • Geographic Scope **Note**: Code in parentheses is the corresponding header found in the raw data file.	• Report Month • BellSouth Company Code • Ticket Submission Date & Time • Ticket Completion Date • Service Type • Disposition and Cause (Non-Design /Non-Special Only) • Trouble Code (Design and Trunking Services) • # Service Access Lines in Service at the end of period • Geographic Scope

SQM Disaggregation - Analog/Benchmark

SQM Level of Disaggregation	SQM Analog/Benchmark
• Resale Residence	• Retail Residence
• Resale Business	• Retail Business
• Resale Design	• Retail Design
• Resale PBX	• Retail PBX
• Resale Centrex	• Retail Centrex
• Resale ISDN	• Retail ISDN
• LNP (Standalone) (Not Available in Maintenance)	• Not Applicable
• 2W Analog Loop Design	• Retail Residence & Business Dispatch
• 2W Analog Loop Non - Design	• Retail Residence & Business (POTS) (Exclusion of Switch-Based Feature Troubles)
• UNE Loop + Port Combinations	• Retail Residence & Business
• UNE Switch Ports	• Retail Residence & Business (POTS)
• UNE Combo Other	• Retail Residence, Business and Design Dispatch
• UNE xDSL (HDSL, ADSL and UCL)	• ADSL Provided to Retail
• UNE ISDN	• Retail ISDN – BRI
• UNE Line Sharing	• ADSL Provided to Retail
• UNE Other Design	• Retail Design
• UNE Other Non - Design	• Retail Residence & Business
• Local Interconnection Trunks	• Parity with Retail
• Local Transport (Unbundled Interoffice Transport)	• Retail DS1/DS3 Interoffice

SEEM Measure

SEEM Measure		
Yes	Tier I	X
	Tier II	X

SEEM Disaggregation - Analog/Benchmark

SEEM Disaggregation	SEEM Analog/Benchmark
• Resale POTS	• Retail Residence and Business (POTS)
• Resale Design	• Retail Design
• UNE Loop + Port Combinations	• Retail Residence and Business
• UNE Loops	• Retail Residence and Business Dispatch
• UNE xDSL	• ADSL Provided to Retail
• UNE Line Sharing	• ADSL Provided to Retail
• Local Interconnection Trunks	• Parity with Retail

M&R-3: Maintenance Average Duration

Definition

The Average duration of Customer Trouble Reports from the receipt of the Customer Trouble Report to the time the trouble report is cleared.

Exclusions

- Trouble tickets canceled at the CLEC request
- BellSouth trouble reports associated with internal or administrative service
- Customer Provided Equipment (CPE) troubles or CLEC Equipment Trouble

Business Rules

For Average Duration the clock starts on the date and time of the receipt of a correct repair request. The clock stops on the date and time the service is restored and the BellSouth or CLEC customer is notified (when the technician completes the trouble ticket on his/her CAT or work systems).

Calculation

Maintenance Duration = (a - b)

- a = Date and Time of Service Restoration
- b = Date and Time Trouble Ticket was Opened

Average Maintenance Duration = (c / d)

- c = Total of all maintenance durations in the reporting period
- d = Total Closed Troubles in the reporting period

Report Structure

- Dispatch/Non-Dispatch
- CLEC Specific
- CLEC Aggregate
- BellSouth Aggregate

Data Retained

Relating to CLEC Experience	Relating to BellSouth Performance
• Report Month • Total Tickets (LINE_NBR) • CLEC Company Name • Ticket Submission Date & Time (TICKET_ID) • Ticket Completion Date (CMPLTN_DT) • Service Type (CLASS_SVC_DESC) • Disposition and Cause (CAUSE_CD & CAUSE_DESC) • Geographic Scope **Note**: Code in parentheses is the corresponding header found in the raw data file.	• Report Month • Total Tickets • BellSouth Company Code • Ticket Submission Date • Ticket Submission Time • Ticket Completion Date • Ticket Completion Time • Total Duration Time • Service Type • Disposition and Cause (Non-Design /Non-Special Only) • Trouble Code (Design and Trunking Services) • Geographic Scope

SQM Disaggregation - Analog/Benchmark

SQM Level of Disaggregation	SQM Analog/Benchmark
• Resale Residence	• Retail Residence
• Resale Business	• Retail Business
• Resale Design	• Retail Design
• Resale PBX	• Retail PBX
• Resale Centrex	• Retail Centrex
• Resale ISDN	• Retail ISDN
• LNP (Standalone) (Not Available in Maintenance)	• Not Applicable
• 2W Analog Loop Design	• Retail Residence & Business Dispatch
• 2W Analog Loop Non - Design	• Retail Residence & Business (POTS) (Exclusion of Switch-Based Feature Troubles)
• UNE Loop + Port Combinations	• Retail Residence & Business
• UNE Switch Ports	• Retail Residence & Business (POTS)
• UNE Combo Other	• Retail Residence, Business and Design Dispatch
• UNE xDSL (HDSL, ADSL and UCL)	• ADSL Provided to Retail
• UNE ISDN	• Retail ISDN – BRI
• UNE Line Sharing	• ADSL Provided to Retail
• UNE Other Design	• Retail Design
• UNE Other Non - Design	• Retail Residence & Business
• Local Interconnection Trunks	• Parity with Retail
• Local Transport (Unbundled Interoffice Transport)	• Retail DS1/DS3 Interoffice

SEEM Measure

SEEM Measure		
Yes	Tier I	X
	Tier II	X

SEEM Disaggregation - Analog/Benchmark

SEEM Disaggregation	SEEM Analog/Benchmark
• Resale POTS	• Retail Residence and Business (POTS)
• Resale Design	• Retail Design
• UNE Loop + Port Combinations	• Retail Residence and Business
• UNE Loops	• Retail Residence and Business Dispatch
• UNE xDSL	• ADSL Provided to Retail
• UNE Line Sharing	• ADSL Provided to Retail
• Local Interconnection Trunks	• Parity with Retail

M&R-4: Percent Repeat Troubles within 30 Days

Definition

Closed trouble reports on the same line/circuit as a previous trouble report received within 30 calendar days as a percent of total troubles closed reported

Exclusions

- Trouble tickets canceled at the CLEC request
- BellSouth trouble reports associated with internal or administrative service
- Customer Provided Equipment (CPE) troubles or CLEC Equipment Trouble

Business Rules

Includes Customer trouble reports received within 30 days of an original Customer trouble report.

Calculation

Percent Repeat Troubles within 30 Days = (a / b) X 100

- a = Count of closed Customer Troubles where more than one trouble report was logged for the same service line within a continuous 30 days
- b = Total Trouble Reports Closed in Reporting Period

Report Structure

- Dispatch/Non-Dispatch
- CLEC Specific
- CLEC Aggregate
- BellSouth Aggregate

Data Retained

Relating to CLEC Experience	Relating to BellSouth Performance
• Report Month • Total Tickets (LINE_NBR) • CLEC Company Name • Ticket Submission Date & Time (TICKET_ID) • Ticket Completion Date (CMPLTN_DT) • Total and Percent Repeat Trouble Reports within 30 Days (TOT_REPEAT) • Service Type • Disposition and Cause (CAUSE_CD & CAUSE_DESC) • Geographic Scope **Note**: Code in parentheses is the corresponding header found in the raw data file.	• Report Month • Total Tickets • BellSouth Company Code • Ticket Submission Date • Ticket Submission Time • Ticket Completion Date • Ticket Completion Time • Total and Percent Repeat Trouble Reports within 30 Days • Service Type • Disposition and Cause (Non-Design /Non-Special Only) • Trouble Code (Design and Trunking Services) • Geographic Scope

SQM Disaggregation - Analog/Benchmark

SQM Level of Disaggregation	SQM Analog/Benchmark
• Resale Residence	• Retail Residence
• Resale Business	• Retail Business
• Resale Design	• Retail Design
• Resale PBX	• Retail PBX
• Resale Centrex	• Retail Centrex
• Resale ISDN	• Retail ISDN
• LNP (Standalone) (Not Available in Maintenance)	• Not Applicable
• 2W Analog Loop Design	• Retail Residence & Business Dispatch
• 2W Analog Loop Non - Design	• Retail Residence & Business (POTS) (Exclusion of Switch-Based Feature Troubles)
• UNE Loop + Port Combinations	• Retail Residence & Business
• UNE Switch Ports	• Retail Residence and Business (POTS)
• UNE Combo Other	• Retail Residence, Business & Design Dispatch
• UNE xDSL (HDSL, ADSL and UCL)	• ADSL Provided to Retail
• UNE ISDN	• Retail ISDN – BRI
• UNE Line Sharing	• ADSL Provided to Retail
• UNE Other Design	• Retail Design
• UNE Other Non - Design	• Retail Residence & Business
• Local Interconnection Trunks	• Parity with Retail
• Local Transport (Unbundled Interoffice Transport)	• Retail DS1/DS3 Interoffice

SEEM Measure

SEEM Measure		
Yes	Tier I	X
	Tier II	X

SEEM Disaggregation - Analog/Benchmark

SEEM Disaggregation	SEEM Analog/Benchmark
• Resale POTS	• Retail Residence and Business (POTS)
• Resale Design	• Retail Design
• UNE Loop + Port Combinations	• Retail Residence and Business
• UNE Loops	• Retail Residence and Business Dispatch
• UNE xDSL	• ADSL Provided to Retail
• UNE Line Sharing	• ADSL Provided to Retail
• Local Interconnection Trunks	• Parity with Retail

M&R-5: Out of Service (OOS) > 24 Hours

Definition

For Out of Service Troubles (no dial tone, cannot be called or cannot call out) the percentage of Total OOS Troubles cleared in excess of 24 hours. (All design services are considered to be out of service).

Exclusions

- Trouble Reports canceled at the CLEC request
- BellSouth Trouble Reports associated with administrative service
- Customer Provided Equipment (CPE) Troubles or CLEC Equipment Troubles

Business Rules

Customer Trouble reports that are out of service and cleared in excess of 24 hours. The clock begins when the trouble report is created in LMOS/WFA and the trouble is counted if the elapsed time exceeds 24 hours.

Calculation

Out of Service (OOS) > 24 hours = (a / b) X 100

- a = Total Cleared Troubles OOS > 24 Hours
- b = Total OOS Troubles in Reporting Period

Report Structure

- Dispatch/Non - Dispatch
- CLEC Specific
- BellSouth Aggregate
- CLEC Aggregate

Data Retained

Relating to CLEC Experience	Relating to BellSouth Performance
• Report Month • Total Tickets • CLEC Company Name • Ticket Submission Date & Time (TICKET_ID) • Ticket Completion Date (CMPLTN_DT • Percentage of Customer Troubles out of • Service > 24 Hours (OOS>24_FLAG) • Service type (CLASS_SVC_DESC) • Disposition and Cause (CAUSE_CD & CAUSE-DESC) • Geographic Scope **Note:** Code in parentheses is the corresponding header found in the raw data file.	• Report Month • Total Tickets • BellSouth Company Code • Ticket Submission Date • Ticket Submission time • Ticket Completion Date • Ticket Completion Time • Percent of Customer Troubles out of Service > 24 Hours • Service type • Disposition and Cause (Non-Design/Non-Special only) • Trouble Code (Design and Trunking Services) • Geographic Scope

SQM Disaggregation - Analog/Benchmark

SQM Level of Disaggregation	SQM Analog/Benchmark
• Resale Residence	• Retail Residence
• Resale Business	• Retail Business
• Resale Design	• Retail Design
• Resale PBX	• Retail PBX
• Resale Centrex	• Retail Centrex
• Resale ISDN	• Retail ISDN
• LNP (Standalone) (Not Available in Maintenance)	• Not Applicable
• 2W Analog Loop Design	• Retail Residence & Business Dispatch
• 2W Analog Loop Non - Design	• Retail Residence & Business (POTS) (Exclusion of Switch-Based Feature Troubles)
• UNE Loop + Port Combinations	• Retail Residence & Business
• UNE Switch Ports	• Retail Residence & Business (POTS)
• UNE Combo Other	• Retail Residence, Business and Design Dispatch
• UNE xDSL (HDSL, ADSL and UCL)	• ADSL Provided to Retail
• UNE ISDN	• Retail ISDN – BRI
• UNE Line Sharing	• ADSL Provided to Retail
• UNE Other Design	• Retail Design
• UNE Other Non - Design	• Retail Residence & Business
• Local Interconnection Trunks	• Parity with Retail
• Local Transport (Unbundled Interoffice Transport)	• Retail DS1/DS3 Interoffice

SEEM Measure

SEEM Measure		
No	Tier I	
	Tier II	

SEEM Disaggregation - Analog/Benchmark

SEEM Disaggregation	SEEM Analog/Benchmark
• Not Applicable	• Not Applicable

M&R-6: Average Answer Time – Repair Centers

Definition

This measures the average time a customer is in queue when calling a BellSouth Repair Center.

Exclusions

None

Business Rules

The clock starts when a CLEC Representative or BellSouth customer makes a choice on the Repair Center's menu and is put in queue for the next repair attendant. The clock stops when the repair attendant answers the call (abandoned calls are not included).

Note: The Total Column is a combined BellSouth Residence and Business number.

Calculation

Answer Time for BellSouth Repair Centers = (a - b)

- a = Time BellSouth Repair Attendant Answers Call
- b = Time of entry into queue after ACD Selection

Average Answer Time for BellSouth Repair Centers = (c / d)

- c = Sum of all Answer Times
- d = Total number of calls by reporting period

Report Structure

- CLEC Aggregate
- BellSouth Aggregate

Data Retained

Relating to CLEC Experience	Relating to BellSouth Performance
• CLEC Average Answer Time	• BellSouth Average Answer Time

SQM Disaggregation - Analog/Benchmark

SQM Level of Disaggregation	SQM Analog/Benchmark
• Region. CLEC/BellSouth Service Centers and BellSouth Repair Centers are regional.	• For CLEC, Average Answer Times in UNE Center and BRMC are comparable to the Average Answer Times in the BellSouth Repair Centers.

SEEM Measure

SEEM Measure		
No	Tier I	
	Tier II	

SEEM Disaggregation - Analog/Benchmark

SEEM Disaggregation	SEEM Analog/Benchmark
• Not Applicable	• Not Applicable

M&R-7: Mean Time To Notify CLEC of Network Outages

Definition

This report measures the time it takes for the BellSouth Network Management Center (NMC) to notify the CLEC of major network outages.

Exclusions

None

Business Rules

BellSouth will inform the CLEC of any major network outages (key customer accounts) via a page or email. When the BellSouth NMC becomes aware of a network incident, the CLEC and BellSouth will be notified electronically. The notification time for each outage will be measured in minutes and divided by the number of outages for the reporting period. These are broadcast messages. It is up to those receiving the message to determine if they have customers affected by the incident.

The CLECs will be notified in accordance with the rules outlined in Appendix D of the CLEC "Customer Guide" which is published on the internet at: www.interconnection.bellsouth.com/guides/other_guides/html/gopue/indexf.htm.

Calculation

Time to Notify CLEC = (a - b)

- a = Date and Time BellSouth Notified CLEC
- b = Date and Time BellSouth Detected Network Incident

Mean Time to Notify CLEC = (c / d)

- c = Sum of all Times to Notify CLEC
- d = Count of Network Incidents

Report Structure

- BellSouth Aggregate
- CLEC Aggregate
- CLEC Specific

Data Retained

Relating to CLEC Experience	Relating to BellSouth Performance
• Report Month • Major Network Events • Date/Time of Incident • Date/Time of Notification	• Report Month • Major Network Events • Date/Time of Incident • Date/Time of Notification

SQM Disaggregation - Analog/Benchmark

SQM Level of Disaggregation	SQM Analog/Benchmark
• BellSouth Aggregate • CLEC Aggregate • CLEC Specific	• Parity by Design

SEEM Measure

SEEM Measure		
No	Tier I	
	Tier II	

SEEM Disaggregation - Analog/Benchmark

SEEM Disaggregation	SEEM Analog/Benchmark
• Not Applicable	• Not Applicable

Section 5: Billing

B-1: Invoice Accuracy

Definition

This measure provides the percentage of accuracy of the billing invoices rendered to CLECs during the current month.

Exclusions

- Adjustments not related to billing errors (e.g., credits for service outage, special promotion credits, adjustments to satisfy the customer)
- Test Accounts

Business Rules

The accuracy of billing invoices delivered by BellSouth to the CLEC must enable them to provide a degree of billing accuracy comparative to BellSouth bills rendered to retail customers of BellSouth. CLECs request adjustments on bills determined to be incorrect. The BellSouth Billing verification process includes manually analyzing a sample of local bills from each bill period. The bill verification process draws from a mix of different customer billing options and types of service. An end-to-end auditing process is performed for new products and services. Internal measurements and controls are maintained on all billing processes.

Calculation

Invoice Accuracy = [(a - b) / a] X 100

- a = Absolute Value of Total Billed Revenues during current month
- b = Absolute Value of Billing Related Adjustments during current month

Report Structure

- CLEC Specific
- CLEC Aggregate
- BellSouth Aggregate
- Geographic Scope
  - Region
  - State

Data Retained

Relating to CLEC Experience	Relating to BellSouth Performance
• Report Month • Invoice Type - UNE - Resale - Interconnection • Total Billed Revenue • Billing Related Adjustments	• Report Month • Retail Type - CRIS - CABS • Total Billed Revenue • Billing Related Adjustments

SQM Disaggregation - Analog/Benchmark

SQM Level of Disaggregation	SQM Analog/Benchmark
• Product/Invoice Type - Resale - UNE - Interconnection	• CLEC Invoice Accuracy is comparable to BellSouth Invoice Accuracy

SEEM Measure

SEEM Measure		
Yes	Tier I	X
	Tier II	X

SEEM Disaggregation - Analog/Benchmark

SEEM Disaggregation	SEEM Analog/Benchmark
• CLEC State • BellSouth State	• Parity With Retail

B2: Mean Time to Deliver Invoices

Definition

Bill Distribution is calculated as follows: CRIS BILLS-The number of workdays is reported for CRIS bills. This is calculated by counting the Bill Period date as the first work day. Weekends and holidays are excluded when counting workdays. J/N Bills are counted in the CRIS work day category for the purposes of the measurement since their billing account number (Q account) is provided from the CRIS system.

CABS BILLS-The number of calendar days is reported for CABS bills. This is calculated by counting the day following the Bill Period date as the first calendar day. Weekends and holidays are included when counting the calendar days.

Exclusions

Any invoices rejected due to formatting or content errors.

Business Rules

This report measures the mean interval for timeliness of billing records delivered to CLECs in an agreed upon format. CRIS-based invoices are measured in business days, and CABS-based invoices in calendar days.

Calculation

Invoice Timeliness = (a - b)

- a = Invoice Transmission Date
- b = Close Date of Scheduled Bill Cycle

Mean Time To Deliver Invoices = (c / d)

- c = Sum of all Invoice Timeliness intervals
- d = Count of Invoices Transmitted in Reporting Period

Report Structure

- CLEC Specific
- CLEC Aggregate
- BellSouth Aggregate
- Geographic Scope
  - Region
  - State

Data Retained

Relating to CLEC Experience	Relating to BellSouth Performance
• Report Month • Invoice Type - UNE - Resale - Interconnection • Invoice Transmission Count • Date of Scheduled Bill Close	• Report Month • Invoice Type - CRIS - CABS • Invoice Transmission Count • Date of Scheduled Bill Close

SQM Disaggregation - Analog/Benchmark

SQM Level of Disaggregation	SQM Analog/Benchmark
Product/Invoice Type • Resale • UNE • Interconnection	• CRIS-based invoices will be released for delivery within six (6) business days. • CABS-based invoices will be released for delivery within eight (8) calendar days. • CLEC Average Delivery Intervals for both CRIS and CABS Invoices are comparable to BellSouth Average delivery for both systems.

SEEM Measure

SEEM Measure		
Yes	Tier I	X
	Tier II	X

SEEM Disaggregation - Analog/Benchmark

SEEM Disaggregation	SEEM Analog/Benchmark
• CLEC State - CRIS - CABS • BellSouth Region	• Parity with Retail

B3: Usage Data Delivery Accuracy

Definition

This measurement captures the percentage of recorded usage that is delivered error free and in an acceptable format to the appropriate Competitive Local Exchange Carrier (CLEC). These percentages will provide the necessary data for use as a comparative measurement for BellSouth performance. This measurement captures Data Delivery Accuracy rather than the accuracy of the individual usage recording.

Exclusions

None

Business Rules

The accuracy of the data delivery of usage records delivered by BellSouth to the CLEC must enable them to provide a degree of accuracy comparative to BellSouth bills rendered to their retail customers. If errors are detected in the delivery process, they are investigated, evaluated and documented. Errors are corrected and the data retransmitted to the CLEC.

Calculation

Usage Data Delivery Accuracy = (a - b) / a X 100

- a = Total number of usage data packs sent during current month
- b = Total number of usage data packs requiring retransmission during current month

Report Structure

- CLEC Specific
- CLEC Aggregate
- BellSouth Aggregate
- Geographic Scope
  - Region

Data Retained

Relating to CLEC Experience	Relating to BellSouth Performance
• Report Month • Record Type - BellSouth Recorded - Non-BellSouth Recorded	• Report Month • Record Type

SQM Disaggregation - Analog/Benchmark

SQM Level of Disaggregation	SQM Analog/Benchmark
• Region	• CLEC Usage Data Delivery Accuracy is comparable to BellSouth Usage Data Delivery Accuracy

SEEM Measure

SEEM Measure		
Yes	Tier I	X
	Tier II	X

SEEM Disaggregation - Analog/Benchmark

SEEM Disaggregation	SEEM Analog/Benchmark
• CLEC State • BellSouth Region	• Parity With Retail

B4: Usage Data Delivery Completeness

Definition

This measurement provides percentage of complete and accurately recorded usage data (usage recorded by BellSouth and usage recorded by other companies and sent to BellSouth for billing) that is processed and transmitted to the CLEC within thirty (30) days of the message recording date. A parity measure is also provided showing completeness of BellSouth messages processed and transmitted via CMDS. BellSouth delivers its own retail usage from recording location to billing location via CMDS as well as delivering billing data to other companies. Timeliness, Completeness and Mean Time to Deliver Usage measures are reported on the same report.

Exclusions

None

Business Rules

The purpose of these measurements is to demonstrate the level of quality of usage data delivered to the appropriate CLEC. Method of delivery is at the option of the CLEC.

Calculation

Usage Data Delivery Completeness = (a / b) X 100

- a = Total number of Recorded usage records delivered during current month that are within thirty (30) days of the message recording date
- b = Total number of Recorded usage records delivered during the current month

Report Structure

- CLEC Specific
- CLEC Aggregate
- BellSouth Aggregate
- Region

Data Retained

Relating to CLEC Experience	Relating to BellSouth Performance
• Report Month • Record Type - BellSouth Recorded - Non-BellSouth Recorded	• Report Month • Record Type

SQM Disaggregation - Analog/Benchmark

SQM Level of Disaggregation	SQM Analog/Benchmark
• Region	• CLEC Usage Data Delivery Completeness is comparable to BellSouth Usage Data Delivery Completeness

SEEM Measure

SEEM Measure		
No	Tier I	
	Tier II	

SEEM Disaggregation - Analog/Benchmark

SEEM Disaggregation	SEEM Analog/Benchmark
• Not Applicable	• Not Applicable

B5: Usage Data Delivery Timeliness

Definition

This measurement provides a percentage of recorded usage data (usage recorded by BellSouth and usage recorded by other companies and sent to BellSouth for billing) that is delivered to the appropriate CLEC within six (6) calendar days from the receipt of the initial recording. A parity measure is also provided showing timeliness of BellSouth messages processed and transmitted via CMDS. Timeliness, Completeness and Mean Time to Deliver Usage measures are reported on the same report.

Exclusions

None

Business Rules

The purpose of this measurement is to demonstrate the level of timeliness for processing and transmission of usage data delivered to the appropriate CLEC. The usage data will be mechanically transmitted or mailed to the CLEC data processing center once daily. The Timeliness interval of usage recorded by other companies is measured from the date BellSouth receives the records to the date BellSouth distributes to the CLEC. Method of delivery is at the option of the CLEC.

Calculation

Usage Data Delivery Timeliness Current month = (a / b) X 100

- a = Total number of usage records sent within six (6) calendar days from initial recording/receipt
- b = Total number of usage records sent

Report Structure

- CLEC Aggregate
- CLEC Specific
- BellSouth Aggregate
- Region

Data Retained

Relating to CLEC Experience	Relating to BellSouth Performance
• Report Month • Record Type - BellSouth Recorded - Non-BellSouth Recorded	• Report Month • Record Type

SQM Disaggregation - Analog/Benchmark

SQM Level of Disaggregation	SQM Analog/Benchmark
• Region	• CLEC Usage Data Delivery Timeliness is comparable to BellSouth Usage Data Delivery Timeliness

SEEM Measure

SEEM Measure		
No	Tier I	
	Tier II	

SEEM Disaggregation - Analog/Benchmark

SEEM Disaggregation	SEEM Analog/Benchmark
• Not Applicable	• Not Applicable

B6: Mean Time to Deliver Usage

Definition

This measurement provides the average time it takes to deliver Usage Records to a CLEC. A parity measure is also provided showing timeliness of BellSouth messages processed and transmitted via CMDS. Timeliness, Completeness and Mean Time to Deliver Usage measures are reported on the same report.

Exclusions

None

Business Rules

The purpose of this measurement is to demonstrate the average number of days it takes BellSouth to deliver Usage data to the appropriate CLEC. Usage data is mechanically transmitted or mailed to the CLEC data processing center once daily. Method of delivery is at the option of the CLEC.

Calculation

Mean Time to Deliver Usage = (a X b) / c

- a = Volume of Records Delivered
- b = Estimated number of days to deliver
- c = Total Record Volume Delivered

Note: Any usage record falling in the 30+ day interval will be added using an average figure of 31.5 days.

Report Structure

- CLEC Aggregate
- CLEC Specific
- BellSouth Aggregate
- Region

Data Retained

Relating to CLEC Experience	Relating to BellSouth Performance
• Report Month • Record Type - BellSouth Recorded - Non-BellSouth Recorded	• Report Month • Record Type

SQM Disaggregation - Analog/Benchmark

SQM Level of Disaggregation	SQM Analog/Benchmark
• Region	• Mean Time to Deliver Usage to CLEC is comparable to Mean Time to Deliver Usage to BellSouth.

SEEM Measure

SEEM Measure		
No	Tier I	
	Tier II	

SEEM Disaggregation - Analog/Benchmark

SEEM Disaggregation	SEEM Analog/Benchmark
• Not Applicable	• Not Applicable

B7: Recurring Charge Completeness

Definition

This measure captures percentage of fractional recurring charges appearing on the correct bill.

Exclusions

None

Business Rules

The effective date of the recurring charge must be within 30 days of the bill date for the charge to appear on the correct bill.

Calculation

Recurring Charge Completeness = (a / b) X 100

- a = Count of fractional recurring charges that are on the correct bill[1]
- b = Total count of fractional recurring charges that are on the correct bill

[1]Correct bill = next available bill

Report Structure

- CLEC Specific
- CLEC Aggregate
- BellSouth Aggregate

Data Retained

Relating to CLEC Experience	Relating to BellSouth Performance
• Report Month • Invoice Type • Total Recurring Charges Billed • Total Billed on Time	• Report Month • Retail Analog • Total Recurring Charges Billed • Total Billed on Time

SQM Disaggregation - Analog/Benchmark

SQM Level of Disaggregation	SQM Analog/Benchmark
Product/Invoice Type	
• Resale	• Parity
• UNE	• Benchmark 90%
• Interconnection	• Benchmark 90%

SEEM Measure

SEEM Measure		
No	Tier I	
	Tier II	

SEEM Disaggregation - Analog/Benchmark

SEEM Disaggregation	SEEM Analog/Benchmark
• Not Applicable	• Not Applicable

B8: Non-Recurring Charge Completeness

Definition

This measure captures percentage of non-recurring charges appearing on the correct bill.

Exclusions

None

Business Rules

The effective date of the non-recurring charge must be within 30 days of the bill date for the charge to appear on the correct bill.

Calculation

Non-Recurring Charge Completeness = (a / b) X 100

- a = Count of non-recurring charges that are on the correct bill[1]
- b = Total count of non-recurring charges that are on the correct bill

[1]Correct bill = next available bill

Report Structure

- CLEC Specific
- CLEC Aggregate
- BellSouth Aggregate

Data Retained

Relating to CLEC Experience	Relating to BellSouth Performance
• Report Month • Invoice Type • Total Non-recurring Charges Billed • Total Billed on Time	• Report Month • Retail Analog • Total Non-recurring Charges Billed • Total Billed on Time

SQM Disaggregation - Analog/Benchmark

SQM Level of Disaggregation	SQM Analog/Benchmark
Product/Invoice Type	
• Resale	• Parity
• UNE	• Benchmark 90%
• Interconnection	• Benchmark 90%

SEEM Measure

SEEM Measure		
No	Tier I	
	Tier II	

SEEM Disaggregation - Analog/Benchmark

SEEM Disaggregation	SEEM Analog/Benchmark
• Not Applicable	• Not Applicable

Section 6: Operator Services And Directory Assistance

OS-1: Speed to Answer Performance/Average Speed to Answer - Toll

Definition

Measurement of the average time in seconds calls wait before answered by a toll operator.

Exclusions

None

Business Rules

The clock starts when the customer enters the queue and the clock stops when a BellSouth representative answers the call or the customer abandons the call. The length of each call is determined by measuring, using a scanning technique, and accumulating the elapsed time from the entry of a customer call into the BellSouth call management system queue until the customer call is abandoned or transferred to BellSouth personnel assigned to handle calls for assistance. The system makes no distinction between CLEC customers and BellSouth customers.

Calculation

Speed to Answer Performance/Average Speed to Answer - Toll = a / b

- a = Total queue time
- b = Total calls answered

Note: Total queue time includes time that answered calls wait in queue as well as time abandoned calls wait in queue prior to abandonment.

Report Structure

- Reported for the aggregate of BellSouth and CLECs
  - State

Data Retained (on Aggregate Basis)

- For the items below, BellSouth's Performance Measurement Analysis Platform (PMAP) receives a final computation; therefore, no raw data file is available in PMAP
- Month
- Call Type (Toll)
- Average Speed of Answer

SQM Disaggregation - Analog/Benchmark

SQM Level of Disaggregation	SQM Analog/Benchmark
• None	• Parity by Design

SEEM Measure

SEEM Measure		
No	Tier I	
	Tier II	

SEEM Disaggregation - Analog/Benchmark

SEEM Disaggregation	SEEM Analog/Benchmark
• Not Applicable	• Not Applicable

OS-2: Speed to Answer Performance/Percent Answered with “X” Seconds - Toll

Definition

Measurement of the percent of toll calls that are answered in less than ten seconds.

Exclusions

None

Business Rules

The clock starts when the customer enters the queue and the clock stops when a BellSouth representative answers the call or the customer abandons the call. The length of each call is determined by measuring, using a scanning technique, and accumulating the elapsed time from the entry of a customer call into the BellSouth call management system queue until the customer call is abandoned or transferred to BellSouth personnel assigned to handle calls for assistance. The system makes no distinction between CLEC customers and BellSouth customers.

Calculation

The Percent Answered within “X” Seconds measurement for toll is derived by using the BellCore Statistical Answer Conversion Tables, to convert the Average Speed to Answer measure into a percent of calls answered within “X” seconds. The BellCore Conversion Tables are specific to the defined parameters of work time, number of operators, max queue size and call abandonment rates.

Report Structure

- Reported for the aggregate of BellSouth and CLECs
  - State

Data Retained (on Aggregate Basis)

- For the items below, BellSouth’s Performance Measurement Analysis Platform (PMAP) receives a final computation; therefore, no raw data file is available in PMAP
- Month
- Call Type (Toll)
- Average Speed of Answer

SQM Disaggregation - Analog/Benchmark

SQM Level of Disaggregation	SQM Analog/Benchmark
• None	• Parity by Design

SEEM Measure

SEEM Measure		
No	Tier I	
	Tier II	

SEEM Disaggregation - Analog/Benchmark

SEEM Disaggregation	SEEM Analog/Benchmark
• Not Applicable	• Not Applicable

DA-1: Speed to Answer Performance/Average Speed to Answer - Directory Assistance (DA)

Definition

Measurement of the average time in seconds calls wait before answered by a DA operator.

Exclusions

None

Business Rules

The clock starts when the customer enters the queue and the clock stops when a BellSouth representative answers the call or the customer abandons the call. The length of each call is determined by measuring, using a scanning technique, and accumulating the elapsed time from the entry of a customer call into the BellSouth call management system queue until the customer call is abandoned or transferred to BellSouth personnel assigned to handle calls for assistance. The system makes no distinction between CLEC customers and BellSouth customers.

Calculation

Speed to Answer Performance/Average Speed to Answer – Directory Assistance (DA) = a / b

- a = Total queue time
- b = Total calls answered

Note: Total queue time includes time that answered calls wait in queue as well as time abandoned calls wait in queue prior to abandonment.

Report Structure

- Reported for the aggregate of BellSouth and CLECs
  - State

Data Retained (on Aggregate Basis)

- For the items below, BellSouth's Performance Measurement Analysis Platform (PMAP) receives a final computation; therefore, no raw data file is available in PMAP
- Month
- Call Type (DA)
- Average Speed of Answer

SQM Disaggregation - Analog/Benchmark

SQM Level of Disaggregation	SQM Analog/Benchmark
• None	• Parity by Design

SEEM Measure

SEEM Measure		
No	Tier I	
	Tier II	

SEEM Disaggregation - Analog/Benchmark

SEEM Disaggregation	SEEM Analog/Benchmark
• Not Applicable	• Not Applicable

DA-2: Speed to Answer Performance/Percent Answered within “X” Seconds - Directory Assistance (DA)

Definition

Measurement of the percent of DA calls that are answered in less than twelve seconds.

Exclusions

None

Business Rules

The clock starts when the customer enters the queue and the clock stops when a BellSouth representative answers the call or the customer abandons the call. The length of each call is determined by measuring, using a scanning technique, and accumulating the elapsed time from the entry of a customer call into the BellSouth call management system queue until the customer call is abandoned or transferred to BellSouth personnel assigned to handle calls for assistance. The system makes no distinction between CLEC customers and BellSouth customers.

Calculation

The Percent Answered within “X” Seconds measurement for DA is derived by using the BellCore Statistical Answer Conversion Tables, to convert the Average Speed to Answer measure into a percent of calls answered within “X” seconds. The BellCore Conversion Tables are specific to the defined parameters of work time, number of operators, max queue size and call abandonment rates.

Report Structure

- Reported for the aggregate of BellSouth and CLECs
  - State

Data Retained (on Aggregate Basis)

- For the items below, BellSouth’s Performance Measurement Analysis Platform (PMAP) receives a final computation; therefore, no raw data file is available in PMAP.
- Month
- Call Type (DA)
- Average Speed of Answer

SQM Disaggregation - Analog/Benchmark

SQM Level of Disaggregation	SQM Analog/Benchmark
• None	• Parity by Design

SEEM Measure

SEEM Measure		
No	Tier I	
	Tier II	

SEEM Disaggregation - Analog/Benchmark

SEEM Disaggregation	SEEM Analog/Benchmark
• Not Applicable	• Not Applicable

Section 7: Database Update Information

D-1: Average Database Update Interval

Definition

This report measures the interval from receipt of the database change request to the completion of the update to the database for Line Information Database (LIDB), Directory Assistance and Directory Listings. For E-911, see Section 8.

Exclusions

- Updates Canceled by the CLEC
- Initial update when supplemented by CLEC
- BellSouth updates associated with internal or administrative use of local services

Business Rules

The interval for this measure begins with the date and time stamp when a service order is completed and the completion notice is released to all systems to be updated with the order information including Directory Assistance, Directory Listings, and Line Information Database (LIDB). The end time stamp is the date and time of completion of updates to the system.

For BellSouth Results:

The BellSouth computation is identical to that for the CLEC with the clarifications noted below.

Other Clarifications and Qualification:

- For LIDB, the elapsed time for a BellSouth update is measured from the point in time when the BellSouth file maintenance process makes the LIDB update information available until the date and time reported by BellSouth that database updates are completed.
- Results for the CLECs are captured and reported at the update level by Reporting Dimension (see below).
- The Completion Date is the date upon which BellSouth issues the Update Completion Notice to the CLEC.
- If the CLEC initiates a supplement to the originally submitted update and the supplement reflects changes in customer requirements (rather than responding to BellSouth initiated changes), then the update submission date and time will be the date and time of BellSouth receipt of a syntactically correct update supplement. Update activities responding to BellSouth initiated changes will not result in changes to the update submission date and time used for the purposes of computing the update completion interval.
- Elapsed time is measured in hours and hundredths of hours rounded to the nearest tenth of an hour.
- Because this should be a highly automated process, the accumulation of elapsed time continues through off-schedule, weekends and holidays; however, scheduled maintenance windows are excluded.

Calculation

Update Interval = (a - b)

- a = Completion Date & Time of Database Update
- b = Submission Date and Time of Database Change

Average Update Interval = (c / d)

- c = Sum of all Update Intervals
- d = Total Number of Updates Completed During Reporting Period

Report Structure

- CLEC Specific (Under development)
- CLEC Aggregate
- BellSouth Aggregate

Data Retained

Relating to CLEC Experience	Relating to BellSouth Performance
• Database File Submission Time • Database File Update Completion Time • CLEC Number of Submissions • Total Number of Updates	• Database File Submission Time • Database File Update Completion Time • BellSouth Number of Submissions • Total Number of Updates

SQM Disaggregation - Analog/Benchmark

SQM Level of Disaggregation:	SQM Analog/Benchmark:
Database Type • LIDB • Directory Listings • Directory Assistance	• Parity by Design

SEEM Measure

SEEM Measure		
No	Tier I	
	Tier II	

SEEM Disaggregation - Analog/Benchmark

SEEM Disaggregation	SEEM Analog/Benchmark
• Not Applicable	• Not Applicable

D-2: Percent Database Update Accuracy

Definition

This report measures the accuracy of database updates by BellSouth for Line Information Database (LIDB), Directory Assistance, and Directory Listings using a statistically valid sample of LSRs/Orders in a manual review. This manual review is not conducted on BellSouth Retail Orders.

Exclusions

- Updates canceled by the CLEC
- Initial update when supplemented by CLEC
- CLEC orders that had CLEC errors
- BellSouth updates associated with internal or administrative use of local services

Business Rules

For each update completed during the reporting period, the original update that the CLEC sent to BellSouth is compared to the database following completion of the update by BellSouth. An update is "completed without error" if the database completely and accurately reflects the activity specified on the original and supplemental update (order) submitted by the CLEC. Each database (LIDB, Directory Assistance, and Directory Listings) should be separately tracked and reported.

A statistically valid sample of CLEC Orders are pulled each month. That sample will be used to test the accuracy of the database update process. This is a manual process.

Calculation

Percent Update Accuracy = (a / b) X 100

- a = Number of Updates Completed Without Error
- b = Number Updates Completed

Report Structure

- CLEC Aggregate
- CLEC Specific (not available in this report)
- BellSouth Aggregate (not available in this report)

Data Retained

Relating to CLEC Experience	Relating to BellSouth Performance
• Report Month • CLEC Order Number (so_nbr) and PON (PON) • Local Service Request (LSR) • Order Submission Date • Number of Orders Reviewed **Note**: Code in parentheses is the corresponding header found in the raw data file.	• Not Applicable

SQM Disaggregation - Analog/Benchmark

SQM Level of Disaggregation	SQM Analog/Benchmark
Database Type • LIDB • Directory Assistance • Directory Listings	• 95% Accurate

SEEM Measure

SEEM Measure		
No	Tier I	
	Tier II	

SEEM Disaggregation - Analog/Benchmark

SEEM Disaggregation	SEEM Analog/Benchmark
• Not Applicable	• Not Applicable

D-3: Percent NXXs and LRNs Loaded by the LERG Effective Date

Definition

Measurement of the percent of NXX(s) and Location Routing Numbers LRN(s) loaded in end office and/or tandem switches by the Local Exchange Routing Guide (LERG) effective date when facilities are in place. BellSouth has a single provisioning process for both NXX(s) and LRN(s). In this measure, BellSouth will identify whether or not a particular NXX has been flagged as LNP capable (set triggers for dips) by the LERG effective date.

An LRN is assigned by the owner of the switch and is placed into the software translations for every switch to be used as an administrative pointer to route NXX(s) in LNP capable switches. The LRN is a result of Local Number Porting and is housed in a national database provided by the Number Portability Administration Center (NPAC). The switch owner is responsible for notifying NPAC and requesting the effective date that will be reflected in the LERG. The national database downloads routing tables into BellSouth Service Control Point (SCP) regional databases, which are queried by switches when routing ported numbers.

The basic NXX routing process includes the addition of all NXX(s) in the response translations. This addition to response translations is what supports LRN routing. Routing instructions for all NXX(s), including LRN(s), are received from the Advance Routing & Trunking System (ARTS) and all routing, including response, is established based on the information contained in the Translation Work Instructions (TWINs) document.

Exclusions

- Activation requests where the CLEC's interconnection arrangements and facilities are not in place by the LERG effective date
- Expedite requests

Business Rules

Data for the initial NXX(s) and LRN(s) in a local calling area will be based on the LERG effective date or completion of the initial interconnection trunk group(s), whichever is longer. Data for additional NXX(s) in the local calling area will be based on the LERG effective date. The LERG effective date is loaded into the system at the request of the CLEC. It is contingent upon the CLEC to engineer, order, and install interconnection arrangements and facilities prior to that date.

The total Count of NXX(s) and LRN(s) that were scheduled to be loaded and those that were loaded by the LERG effective date in BellSouth switches will be captured in the Work Force Administration -Dispatch In database.

Calculation

Percent NXXs/LRNs Loaded and Tested Prior to the LERG Effective Date = (a / b) X 100

- a = Count of NXXs and LRNs loaded by the LERG effective date
- b = Total NXXs and LRNs scheduled to be loaded by the LERG effective date

Report Structure

- CLEC Specific
- CLEC Aggregate
- BellSouth (Not Applicable)

Data Retained

Relating to CLEC Experience	Relating to BellSouth Performance
• Company Name • Company Code • NPA/NXX • LERG Effective Date • Loaded Date	• Not Applicable

SQM Disaggregation - Analog/Benchmark

SQM Level of Disaggregation	SQM Analog/Benchmark
• Geographic Scope - Region	• 100% by LERG Effective Date

SEEM Measure

SEEM Measure		
No	Tier I	
	Tier II	

SEEM Disaggregation - Analog/Benchmark

SEEM Disaggregation	SEEM Analog/Benchmark
• Not Applicable	• Not Applicable

Section 8: E911

E-1: Timeliness

Definition

Measures the percent of batch orders for E911 database updates (to CLEC resale and BellSouth retail records) processed successfully within a 24-hour period.

Exclusions

- Any resale order canceled by a CLEC
- Facilities-based CLEC orders

Business Rules

The 24-hour processing period is calculated based on the date and time processing starts on the batch orders and the date and time processing stops on the batch orders. Mechanical processing starts when SCC (the BellSouth E911 vendor) receives E911 files containing batch orders extracted from the BellSouth Service Order Control System (SOCS). Processing stops when SCC loads the individual records to the E911 database. The E911 database includes updates to the Automatic Location Identification (ALI) database. The system makes no distinction between CLEC resale records and BellSouth retail records.

Calculation

E911 Timeliness = (a / b) X 100

- a = Number of batch orders processed within 24 hours
- b = Total number of batch orders submitted

Report Structure

Reported for the aggregate of CLEC resale updates and BellSouth retail updates

- State
- Region

Data Retained

- Report month
- Aggregate data

SQM Disaggregation - Analog/Benchmark

SQM Level of Disaggregation	SQM Analog/Benchmark
• None	• Parity by Design

SEEM Measure

SEEM Measure		
No	Tier I	
	Tier II	

SEEM Disaggregation - Analog/Benchmark

SEEM Disaggregation	SEEM Analog/Benchmark
• Not Applicable	• Not Applicable

E-2: Accuracy

Definition

Measures the percent of E911 telephone number (TN) record updates (to CLEC resale and BellSouth retail records) processed successfully for E911 (including the Automatic Location Identification (ALI) database).

Exclusions

- Any resale order canceled by a CLEC
- Facilities-based CLEC orders

Business Rules

Accuracy is based on the number of records processed without error at the conclusion of the processing cycle. Mechanical processing starts when SCC (the BellSouth E911 vendor) receives E911 files containing telephone number (TN) records extracted from BellSouth's Service Order Control System (SOCS). The system makes no distinction between CLEC resale records and BellSouth retail records.

Calculation

E911 Accuracy = (a / b) X 100

- a = Number of record individual updates processed with no errors
- b = Total number of individual record updates

Report Structure

Reported for the aggregate of CLEC resale updates and BellSouth retail updates

- State
- Region

Data Retained

- Report month
- Aggregate data

SQM Disaggregation - Analog/Benchmark

SQM Level of Disaggregation	SQM Analog/Benchmark
• None	• Parity by Design

SEEM Measure

SEEM Measure		
No	Tier I	
	Tier II	

SEEM Disaggregation - Analog/Benchmark

SEEM Disaggregation	SEEM Analog/Benchmark
• Not Applicable	• Not Applicable

E-3: Mean Interval

Definition

Measures the mean interval processing of E911 batch orders (to update CLEC resale and BellSouth retail records) including processing against the Automatic Location Identification (ALI) database.

Exclusions

- Any resale order canceled by a CLEC
- Facilities-based CLEC orders

Business Rules

The processing period is calculated based on the date and time processing starts on the batch orders and the date and time processing stops on the batch orders. Data is posted is 4-hour increments up to and beyond 24 hours. The system makes no distinction between CLEC resale records and BellSouth retail records.

Calculation

E911 Interval = (a - b)

- a = Date and time of batch order completion
- b = Date and time of batch order submission

E911 Mean Interval = (c / d)

- c = Sum of all E911 Intervals
- d = Number of batch orders completed

Report Structure

Reported for the aggregate of CLEC resale updates and BellSouth retail updates

- State
- Region

Data Retained

- Report month
- Aggregate data

SQM Disaggregation - Analog/Benchmark

SQM Level of Disaggregation	SQM Analog/Benchmark
• None	• Parity by Design

SEEM Measure

SEEM Measure		
No	Tier I	
	Tier II	

SEEM Disaggregation - Analog/Benchmark

SEEM Disaggregation	SEEM Analog/Benchmark
• Not Applicable	• Not Applicable

Section 9: Trunk Group Performance

TGP-1: Trunk Group Performance-Aggregate

Definition

The Trunk Group Performance report displays, over a reporting cycle, aggregate, average trunk group blocking data for each hour of each day of the reporting cycle, for both CLEC affecting and BellSouth affecting trunk groups.

Exclusions

- Trunk groups for which valid data is not available for an entire study period
- Duplicate trunk group information
- Trunk groups blocked due to CLEC network/equipment failure
- Trunk groups blocked due to CLEC delayed or refused orders
- Trunk groups blocked due to unanticipated significant increases in CLEC traffic
- Final groups actually overflowing, not blocked

Business Rules

The purpose of the Trunk Group Performance Report is to provide trunk blocking measurements on CLEC and BellSouth trunk groups for comparison only. It is not the intent of the report that it be used for network management and/or engineering.

Monthly Average Blocking:

- The reporting cycle includes both business and non-business days in a calendar month.
- Monthly average blocking values are calculated for each trunk group for each of the 24 time consistent hours across a reporting cycle.

Aggregate Monthly Blocking:

- Used to compare aggregate blocking across trunk groups which terminate traffic at CLEC points of presence versus BellSouth switches.
- Aggregate monthly blocking data is calculated for each hour of the day across all trunk groups assigned to a category.

Trunk Categorization:

This report displays, over a reporting cycle, aggregate, average blocking data for each hour of a day. Therefore, for each reporting cycle, 24 blocking data points are generated for two aggregate groups of selected trunk groups. These groups are CLEC affecting and BellSouth affecting trunk groups. In order to assign trunk groups to each aggregate group, all trunk groups are first assigned to a category. A trunk group's end points and the type of traffic that is transmitted on it define a category. Selected categories of trunk groups are assigned to the aggregate groups so that trunk reports can be generated. The categories to which trunk groups have been assigned for this report are as follows.

CLEC Affecting Categories:

	Point A	Point B
Category 1:	BellSouth End Office	BellSouth Access Tandem
Category 3:	BellSouth End Office	CLEC Switch
Category 4:	BellSouth Local Tandem	CLEC Switch
Category 5:	BellSouth Access Tandem	CLEC Switch
Category 10:	BellSouth End Office	BellSouth Local Tandem
Category 16:	BellSouth Tandem	BellSouth Tandem

BellSouth Affecting Categories:

	Point A	Point B
Category 9:	BellSouth End Office	BellSouth End Office

Calculation

Monthly Average Blocking:

- For each hour of the day, each day's raw data are summed across all valid measurements days in a report cycle for blocked and attempted calls.

- The sum of the blocked calls is divided by the total number of calls attempted in a reporting period.

Aggregate Monthly Blocking:

- For each hour of the day, the monthly sums of the blocked and attempted calls from each trunk group are separately aggregated over all trunk groups within each assigned category.
- The total blocked calls is divided by the total call attempts within a group to calculate an aggregate monthly blocking for each assigned group.
- The result is an aggregate monthly average blocking value for each of the 24 hours by group.
- The difference between the CLEC and BellSouth affecting trunk groups are also calculated for each hour.

Report Structure

- CLEC Aggregate
- BellSouth Aggregate
  - State

Data Retained

Relating to CLEC Experience	Relating to BellSouth Performance
• Report Month • Total Trunk Groups • Number of Trunk Groups by CLEC • Hourly Blocking Per Trunk Group • Hourly Usage Per Trunk Group • Hourly Call Attempts Per Trunk Group	• Report Month • Total Trunk Groups • Aggregate Hourly Blocking Per Trunk Group • Hourly Usage Per Trunk Group • Hourly Call Attempts Per Trunk Group

SQM Disaggregation - Analog/Benchmark

SQM Level of Disaggregation	SQM Analog/Benchmark
• CLEC aggregate • BellSouth aggregate	• Any 2 hour period in 24 hours where CLEC blockage exceeds BellSouth blockage by more than 0.5% using trunk groups 1, 3, 4, 5, 10, 16 for CLECs and 9 for BellSouth

SEEM Measure

SEEM Measure		
Yes	Tier I	
	Tier II	X

SEEM Disaggregation - Analog/Benchmark

SEEM Disaggregation	SEEM Analog/Benchmark
• CLEC Aggregate • BellSouth Aggregate	• Any 2 hour period in 24 hours where CLEC blockage exceeds BellSouth blockage by more than 0.5% using trunk groups 1,3,4,5,10,16 for CLECs and 9 for BellSouth

TGP-2: Trunk Group Performance-CLEC Specific

Definition

The Trunk Group Performance report displays, over a reporting cycle, aggregate, average trunk group blocking data for each hour of each day of the reporting cycle, for both CLEC affecting and BellSouth affecting trunk groups.

Exclusions

- Trunk Groups for which valid data is not available for an entire study period
- Duplicate trunk group information
- Trunk groups blocked due to CLEC network/equipment failure
- Trunk groups blocked due to CLEC delayed or refused orders
- Trunk groups blocked due to unanticipated significant increases in CLEC traffic
- Final groups actually overflowing, not blocked

Business Rules

The purpose of the Trunk Group Performance Report is to provide trunk blocking measurements on CLEC and BellSouth trunk groups for comparison only. It is not the intent of the report that it be used for network management and/or engineering.

Monthly Average Blocking:

- The reporting cycle includes both business and non-business days in a calendar month.
- Monthly average blocking values are calculated for each trunk group for each of the 24 time consistent hours across a reporting cycle.

Aggregate Monthly Blocking:

- Used to compare aggregate blocking across trunk groups which terminate traffic at CLEC points of presence versus BellSouth switches.
- Aggregate monthly blocking data is calculated for each hour of the day across all trunk groups assigned to a category.

Trunk Categorization:

- This report displays, over a reporting cycle, aggregate, average blocking data for each hour of a day. Therefore, for each reporting cycle, 24 blocking data points are generated for two aggregate groups of selected trunk groups. These groups are CLEC affecting and BellSouth affecting trunk groups. In order to assign trunk groups to each aggregate group, all trunk groups are first assigned to a category. A trunk group's end points and the type of traffic that is transmitted on it define a category. Selected categories of trunk groups are assigned to the aggregate groups so that trunk reports can be generated. The categories to which trunk groups have been assigned for this report are as follows.

CLEC Affecting Categories:

	Point A	Point B
Category 1:	BellSouth End Office	BellSouth Access Tandem
Category 3:	BellSouth End Office	CLEC Switch
Category 4:	BellSouth Local Tandem	CLEC Switch
Category 5:	BellSouth Access Tandem	CLEC Switch
Category 10:	BellSouth End Office	BellSouth Local Tandem
Category 16:	BellSouth Tandem	BellSouth Tandem

BellSouth Affecting Categories:

	Point A	Point B
Category 9:	BellSouth End Office	BellSouth End Office

Calculation

Monthly Average Blocking:

- For each hour of the day, each day's raw data are summed across all valid measurements days in a report cycle for blocked and attempted calls.
- The sum of the blocked calls is divided by the total number of calls attempted in a reporting period.

Aggregate Monthly Blocking:

- For each hour of the day, the monthly sums of the blocked and attempted calls from each trunk group are separately aggregated over all trunk groups within each assigned category.
- The total blocked calls is divided by the total call attempts within a group to calculate an aggregate monthly blocking for each assigned group.
- The result is an aggregate monthly average blocking value for each of the 24 hours by group.
- The difference between the CLEC and BellSouth affecting trunk groups are also calculated for each hour.

Report Structure

- CLEC Specific
  - State

Data Retained

Relating to CLEC Experience	Relating to BellSouth Performance
• Report Month • Total Trunk Groups • Number of Trunk Groups by CLEC • Hourly Blocking Per Trunk Group • Hourly Usage Per Trunk Group • Hourly Call Attempts Per Trunk Group	• Report Month • Total Trunk Groups • Aggregate Hourly Blocking Per Trunk Group • Hourly Usage Per Trunk Group • Hourly Call Attempts Per Trunk Group

SQM Disaggregation - Analog/Benchmark

SQM Level of Disaggregation	SQM Analog/Benchmark
• CLEC Trunk Group	• Any 2 hour period in 24 hours where CLEC blockage exceeds BellSouth blockage by more than 0.5% using trunk groups 1, 3, 4, 5, 10, 16 for CLECs and 9 for BellSouth

SEEM Measure

SEEM Measure		
Yes	Tier I	X
	Tier II	

SEEM Disaggregation - Analog/Benchmark

SEEM Disaggregation	SEEM Analog/Benchmark
• CLEC Trunk Group • BellSouth Trunk Group	• Any 2 hour period in 24 hours where CLEC blockage exceeds BellSouth blockage by more than 0.5% using trunk groups 1, 3, 4, 5, 10, 16 for CLECs and 9 for BellSouth

Section 10: Collocation

C-1: Collocation Average Response Time

Definition

Measures the average time (counted in calendar days) from the receipt of a complete and accurate collocation application (including receipt of application fee if required) to the date BellSouth returns a response electronically or in writing. Within 10 calendar days after having received a bona fide application for physical collocation, BellSouth must respond as to whether space is available or not.

Exclusions

Any application canceled by the CLEC.

Business Rules

The clock starts on the date that BellSouth receives a complete and accurate collocation application accompanied by the appropriate application fee if required. The clock stops on the date that BellSouth returns a response. The clock will restart upon receipt of changes to the original application request.

Calculation

Response Time = (a - b)

- a = Request Response Date
- b = Request Submission Date

Average Response Time = (c / d)

- c = Sum of all Response Times
- d = Count of Responses Returned within Reporting Period

Report Structure

- Individual CLEC (alias) Aggregate
- Aggregate of all CLECs

Data Retained

- Report Period
- Aggregate Data

SQM Disaggregation - Analog/Benchmark

Level of Disaggregation	SQM Analog/Benchmark
• State • Virtual-Initial • Virtual-Augment • Physical Caged-Initial • Physical Caged-Augment • Physical-Cageless-Initial • Physical Cageless-Augment	• Virtual - 20 Calendar Days • Physical Caged - 30 Calendar Days • Physical Cageless - 30 Calendar Days

SEEM Measure

SEEM Measure		
No	Tier I	
	Tier II	

SEEM Disaggregation - Analog/Benchmark

SEEM Disaggregation	SEEM Analog/Benchmark
• Not Applicable	• Not Applicable

C-2: Collocation Average Arrangement Time

Definition

Measures the average time (counted in calendar days) from receipt of a complete and accurate Bona Fide firm order (including receipt of appropriate fee if required) to the date BellSouth completes the collocation arrangement and notifies the CLEC.

Exclusions

- Any Bona Fide firm order canceled by the CLEC
- Any Bona Fide firm order with a CLEC-negotiated interval longer than the benchmark interval

Business Rules

The clock starts on the date that BellSouth receives a complete and accurate Bone Fide firm order accompanied by the appropriate fee. The clock stops on the date that BellSouth completes the collocation arrangement and notifies the CLEC.

Calculation

Arrangement Time = (a - b)

- a = Date Collocation Arrangement is Complete
- b = Date Order for Collocation Arrangement Submitted

Average Arrangement Time = (c / d)

- c = Sum of all Arrangement Times
- d = Total Number of Collocation Arrangements Completed during Reporting Period

Report Structure

- Individual CLEC (alias) Aggregate
- Aggregate of all CLECs

Data Retained

- Report Period
- Aggregate Data

SQM Disaggregation - Analog/Benchmark

SQM Level of Disaggregation	SQM Analog/Benchmark
• State • Virtual-Initial • Virtual-Augment • Physical Caged-Initial • Physical Caged-Augment • Physical Cageless-Initial • Physical Cageless-Augment	• Virtual - 50 Calendar Days (Ordinary) • Virtual - 75 Calendar Days (Extraordinary) • Physical Caged - 90 Calendar Days • Physical Cageless - 60 Calendar Days (Ordinary) • Physical Cageless - 90 Calendar Days (Extraordinary)

SEEM Measure

SEEM Measure		
No	Tier I	
	Tier II	

SEEM Disaggregation - Analog/Benchmark

SEEM Disaggregation	SEEM Analog/Benchmark
• Not Applicable	• Not Applicable

C-3: Collocation Percent of Due Dates Missed

Definition

Measures the percent of missed due dates for both virtual and physical collocation arrangements.

Exclusions

Any Bona Fide firm order canceled by the CLEC.

Business Rules

Percent Due Dates Missed is the percent of total collocation arrangements which BellSouth is unable to complete by end of the BellSouth committed due date. The clock starts on the date that BellSouth receives a complete and accurate Bona Fide firm order accompanied by the appropriate fee if required. The arrangement is considered a missed due date if it is not completed on or before the committed due date.

Calculation

% of Due Dates Missed = (a / b) X 100

- a = Number of Completed Orders that were not completed within BellSouth Committed Due Date during Reporting Period
- b = Number of Orders Completed in Reporting Period

Report Structure

- Individual CLEC (alias) Aggregate
- Aggregate of all CLECs

Data Retained

- Report Period
- Aggregate Data

SQM Disaggregation - Analog/Benchmark

SQM Level of Disaggregation	SQM Analog/Benchmark
• State • Virtual-Initial • Virtual-Augment • Physical Caged-Initial • Physical Caged-Augment • Physical Cageless-Initial • Physical Cageless-Augment	• >= 95% on time

SEEM Measure

SEEM Measure		
Yes	Tier I	X
	Tier II	X

SEEM Disaggregation - Analog/Benchmark

SEEM Disaggregation	SEEM Analog/Benchmark
• All Collocation Arrangements	• >= 95% on time

Section 11: Change Management

CM-1: Timeliness of Change Management Notices

Definition

Measures whether CLECs receive required software release notices on time to prepare for BellSouth interface/system changes so CLEC interfaces are not impaired by change.

Exclusions

- Changes to release dates for reasons outside BellSouth control, such as the system software vendor changes. For example: a patch to fix a software problem.
- Type 6 Change Requests (Defects/Expedites), as defined by the Change Control Process (CCP)

Business Rules

This metric is designed to measure the percent of change management notices sent to the CLECs according to notification standards and time frames set forth in the Change Control Process. The CCP is used by BellSouth and the CLECs to manage requested changes to the BellSouth Local Interfaces.

The clock starts on the notification date. The clock stops on the software release date. When project events occur (scope changes, analysis information, etc.), the software release date may change. A revised notification would be required and the clock would restart. Based on release constraints for defects/expedites, notification may be less than the agreed upon interval in the CCP for new features.

Calculation

Timeliness of Change Management Notices = (a / b) X 100

- a = Total number of Change Management Notifications Sent Within Required Timeframes
- b = Total Number of Change Management Notifications Sent

Report Structure

- BellSouth Aggregate

Data Retained

- Report Period
- Notice Date
- Release Date

SQM Disaggregation - Analog/Benchmark

SQM Level of Disaggregation	SQM Analog/Benchmark
• Region	• 95% >= 30 Days of Release

SEEM Measure

SEEM Measure		
Yes	Tier I	
	Tier II	X

SEEM Disaggregation - Analog/Benchmark

SEEM Disaggregation	SEEM Analog/Benchmark
• Region	• 95% >= 30 Days of Release

CM-2: Change Management Notice Average Delay Days

Definition

Measures the average delay days for change management system release notices sent outside the time frame set forth in the Change Control Process.

Exclusions

- Changes to release dates for reasons outside BellSouth control, such as the system software vendor changes. For example: a patch to fix a software problem
- Type 6 Change Requests (Defects/Expedites), as defined by the Change Control Process

Business Rules

This metric is designed to measure the percent of change management notices sent to the CLECs according to notification standards and time frames set forth in the Change Control Process. The CCP is used by BellSouth and the CLECs to manage requested changes to the BellSouth Local Interfaces.

The clock starts on the notification due date. The clock stops on the software release date. When project events occur (scope changes, analysis information, etc.), the software release date may change. A revised notification would be required and the clock would restart. Based on release constraints for defects/expedites, notification may be less than the agreed upon interval in the CCP for new features.

Calculation

Change Management Notice Delay Days = (a - b)

- a = Date Notice Sent
- b = Date Notice Due

Change Management Notice Average Delay Days = (c / d)

- c = Sum of all Change Management Notice Delay Days
- d = Total Number of Notices Sent Late

Report Structure

- BellSouth Aggregate

Data Retained

- Report Period
- Notice Date
- Release Date

SQM Disaggregation - Analog/Benchmark

SQM Level of Disaggregation	SQM Analog/Benchmark
• Region	• <= 8 Days

SEEM Measure

SEEM Measure		
No	Tier I	
	Tier II	

SEEM Disaggregation - Analog/Benchmark

SEEM Disaggregation	SEEM Analog/Benchmark
• Not Applicable	• Not Applicable

CM-3: Timeliness of Documents Associated with Change

Definition

Measures whether CLECs received requirements or business rule documentation on time to prepare for BellSouth interface/system changes so CLEC interfaces are not impaired by change.

Exclusions

- Documentation for release dates that slip less than 30 days for reasons outside BellSouth control, such as changes due to Regulatory mandate or CLEC request
- Type 6 Change Requests (Defects/Expedites), as defined by the Change Control Process

Business Rules

This metric is designed to measure the percent of requirements or business rule documentation sent to the CLECs according to documentation standards and timeframes set forth in the Change Control Process. The CCP is used by BellSouth and the CLECs to manage requested changes to the BellSouth Local Interfaces.

The clock starts on the business rule documentation release date. The clock stops on the software release date. When project events occur (scope changes, analysis information, etc.), the software release date may change. Revisions to documentation could be required and the clock would restart.

Calculation

Timeliness of Documents Associated with Change = (a / b) X 100

- a = Change Management Documentation Sent Within Required Timeframes after Notices
- b = Total Number of Change Management Documentation Sent

Report Structure

- BellSouth Aggregate

Data Retained

- Report Period
- Notice Date
- Release Date

SQM Disaggregation - Analog/Benchmark

SQM Level of Disaggregation	SQM Analog/Benchmark
• Region	• 95% >= 30 days if new features coding is required • 95% >= 5 days for documentation defects, corrections or clarifications

SEEM Measure

SEEM Measure		
Yes	Tier I	
	Tier II	X

SEEM Disaggregation - Analog/Benchmark

SEEM Disaggregation	SEEM Analog/Benchmark
• Region	• 95% >= 30 days of the change

CM-4: Change Management Documentation Average Delay Days

Definition

Measures the average delay days for requirements or business rule documentation sent outside the time frames set forth in the Change Control Process.

Exclusions

- Documentation for release dates that slip less than 30 days for reasons outside BellSouth control, such as changes due to Regulatory mandate or CLEC request
- Type 6 Change Requests (Defects/Expedites), as defined by the Change Control Process

Business Rules

This metric is designed to measure the percent of requirements or business rule documentation sent to the CLECs according to documentation standards and time frames set forth in the Change Control Process. The CCP is used by BellSouth and the CLECs to manage requested changes to the BellSouth Local Interfaces.

The clock starts on the business rule documentation release date. The clock stops on the software release date. When project events occur (scope changes, analysis information, etc.), the software release date may change. Revisions to documentation could be required and the clock would restart.

Calculation

Change Management Documentation Delay Days = (a - b)

- a = Date Documentation Provided
- b = Date Documentation Due

Change Management Documentation Average Delay Days = (c / d)

- c = Sum of all CM Documentation Delay Days
- d = Total Change Management Documents Sent

Report Structure

- BellSouth Aggregate

Data Retained

- Report Period
- Notice Date
- Release Date

SQM Disaggregation - Analog/Benchmark

SQM Level of Disaggregation	SQM Analog/Benchmark
• Region	• <= 8 Days

SEEM Measure

SEEM Measure		
No	Tier I	
	Tier II	

SEEM Disaggregation - Analog/Benchmark

SEEM Disaggregation	SEEM Analog/Benchmark
• Not Applicable	• Not Applicable

CM-5: Notification of CLEC Interface Outages

Definition

Measures the time it takes BellSouth to notify the CLEC of an outage of an interface.

Exclusions

None

Business Rules

This measure is designed to notify the CLEC of interface outages within 15 minutes of BellSouth's verification that an outage has taken place. This metric will be expressed as a percentage.

Calculation

Notification of CLEC Interface Outages = (a / b) X 100

- a = Number of Interface Outages where CLECS are notified within 15 minutes
- b = Total Number of Interface Outages

Report Structure

- CLEC Aggregate

Data Retained

Relating to CLEC Experience	Relating to BellSouth Performance
• Number of Interface Outages • Number of Notifications <= 15 minutes	• Not Applicable

SQM Disaggregation - Analog/Benchmark

SQM Level of Disaggregation	SQM Analog/Benchmark
• By interface type for all interfaces accessed by CLECs	• 97% in 15 Minutes

Interface	Applicable to
EDI	CLEC
CSOTS	CLEC
LENS	CLEC
TAG	CLEC
ECTA	CLEC
TAFI	CLEC/BellSouth

SEEM Measure

SEEM Measure		
No	Tier I	
	Tier II	

SEEM Disaggregation - Analog/Benchmark

SEEM Disaggregation	SEEM Analog/Benchmark
• Not Applicable	• Not Applicable

Section 12: Bona Fide / New Business Request Process

BFR-1: Percentage of BFR/NBR Requests Processed Within 30 Business Days

Definition

Percentage of Bona Fide/New Business Requests processed within 30 business days for the development and purchases of network elements not currently offered.

Exclusions

- Any application cancelled by the CLEC

Business Rules

The clock starts when BellSouth receives a complete and accurate application. The clock stops when BellSouth completes application processing for Network Elements that are not operational at the time of the request.

Calculation

Percentage of BFR/NBR Requests Processed Within 30 Business Days = (a / b) X 100

- a = Count of number of requests processed within 30 days
- b = Total number of requests

Report Structure

- Individual CLEC (alias) Aggregate
- Aggregate of all CLECs

Data Retained

- Report Period
- Aggregate Data

SQM Disaggregation - Analog/Benchmark

SQM Level of Disaggregation	SQM Analog/Benchmark
• Region	• 90% <= 30 business days

SEEM Measure

SEEM Measure		
No	Tier I	
	Tier II	

SEEM Disaggregation - Analog/Benchmark

SEEM Disaggregation	SEEM Analog/Benchmark
• Not Applicable	• Not Applicable

BFR-2: Percentage of Quotes Provided for Authorized BFR/NBR Requests Processed Within X (10/30/60) Business Days

Definition

Percentage of quotes provided in response to Bona Fide/New Business Requests within X (10/30/60) business days for network elements not currently offered.

Exclusions

- Requests that are subject to pending arbitration

Business Rules

The clock starts when BellSouth receives a complete and accurate application. The clock stops when BellSouth responds back to the application with a price quote.

Calculation

Percentage of Quotes Provided for Authorized BFR/NBR Requests Processed Within X (10/30/60) Business Days = (a / b) X 100

- a = Count of number of requests processed within "X" days
- b = Total number of requests
  where "X" = 10, 30, or 60 days

Report Structure

- New Network Elements that are operational at the time of the request
- New Network Elements that are ordered by the FCC
- New Network Elements that are not operational at the time of the request

Data Retained

- Report Period
- Aggregate Data

SQM Disaggregation - Analog/Benchmark

SQM Level of Disaggregation	SQM Analog/Benchmark
• Region	• 90% <= 10/30/60 business days - Network Elements that are operational at the time of the request – 10 days - Network Elements that are Ordered by the FCC – 30 days - New Network Elements – 90 days

SEEM Measure

SEEM Measure		
No	Tier I	
	Tier II	

SEEM Disaggregation - Analog/Benchmark

SEEM Disaggregation	SEEM Analog/Benchmark
• Not Applicable	• Not Applicable

Appendix A: Reporting Scope

A-1: Standard Service Groupings

See individual reports in the body of the SQM.

A-2: Standard Service Order Activities

These are the generic BellSouth/CLEC service order activities which are included in the Pre-Ordering, Ordering, and Provisioning sections of this document. It is not meant to indicate specific reporting categories.

Service Order Activity Types

- Service Migrations Without Changes
- Service Migrations With Changes
- Move and Change Activities
- Service Disconnects (Unless noted otherwise)
- New Service Installations

Pre-Ordering Query Types

- Address
- Telephone Number
- Appointment Scheduling
- Customer Service Record
- Feature Availability
- Service Inquiry

Maintenance Query Types:

TAFI - TAFI queries the systems below

- CRIS
- March
- Predictor
- LMOS
  - DLR
  - DLETH
  - LMOSupd
- LNP
- NIW
- OSPCM
- SOCS

Report Levels

- CLEC RESH
- CLEC State
- CLEC Region
- Aggregate CLEC State
- Aggregate CLEC Region
- BellSouth State
- BellSouth Region

Appendix B: Glossary of Acronyms and Terms

Symbols used in calculations

∑
A mathematical symbol representing the sum of a series of values following the symbol.

-
A mathematical operator representing subtraction.

+
A mathematical operator representing addition.

/
A mathematical operator representing division.

<
A mathematical symbol that indicates the metric on the left of the symbol is less than the metric on the right.

<=
A mathematical symbol that indicates the metric on the left of the symbol is less than or equal to the metric on the right.

>
A mathematical symbol that indicates the metric on the left of the symbol is greater than the metric on the right.

>=
A mathematical symbol that indicates the metric on the left of the symbol is greater than or equal to the metric on the right.

( )
Parentheses, used to group mathematical operations which are completed before operations outside the parentheses.

A

ACD
Automatic Call Distributor - A service that provides status monitoring of agents in a call center and routes high volume incoming telephone calls to available agents while collecting management information on both callers and attendants.

Aggregate
Sum total of all items in like category, e.g. CLEC aggregate equals the sum total of all CLECs' data for a given reporting level.

ALEC
Alternative Local Exchange Company = FL CLEC

ADSL
Asymmetrical Digital Subscriber Line

ASR
Access Service Request - A request for access service terminating delivery of carrier traffic into a Local Exchange Carrier's network.

ATLAS
Application for Telephone Number Load Administration System - The BellSouth Operations System used to administer the pool of available telephone numbers and to reserve selected numbers from the pool for use on pending service requests/service orders.

ATLASTN
ATLAS software contract for Telephone Number.

Auto Clarification
The number of LSRs that were electronically rejected from LESOG and electronically returned to the CLEC for correction.

B

BFR:
Bona Fide Request

BILLING
The process and functions by which billing data is collected and by which account information is processed in order to render accurate and timely billing.

BOCRIS
Business Office Customer Record Information System (Front-end to the CRIS database.)

BRI
Basic Rate ISDN

BRC
Business Repair Center – The BellSouth Business Systems trouble receipt center which serves business and CLEC customers.

BellSouth
BellSouth Telecommunications, Inc.

C

CABS
Carrier Access Billing System

CCC
Coordinated Customer Conversions

CCP
Change Control Process

Centrex
A business telephone service, offered by local exchange carriers, which is similar to a Private Branch Exchange (PBX) but the switching equipment is located in the telephone company Central Office (CO).

CKTID
A unique identifier for elements combined in a service configuration

CLEC
Competitive Local Exchange Carrier

CLP
Competitive Local Provider = NC CLEC

CM
Change Management

CMDS
Centralized Message Distribution System - Telcordia administered national system used to transfer specially formatted messages among companies.

COFFI
Central Office Feature File Interface - Provides information about USOCs and class of service. COFFI is a part of DOE/ SONGS. It indicates all services available to a customer.

COG
Corporate Gateway - Telcordia product designed for the electronic submission of xDSL Local Service Requests.

CRIS

Customer Record Information System - The BellSouth proprietary corporate database and billing system for non-access customers and services.

CRSACCTS
CRIS software contract for CSR information

CRSG
Complex Resale Support Group

C-SOTS
CLEC Service Order Tracking System

CSR
Customer Service Record

CTTG
Common Transport Trunk Group - Final trunk groups between BellSouth & Independent end offices and the BellSouth access tandems.

CWINS Center
Customer Wholesale Interconnection Network Services Center (formerly the UNE Center).

D

DA
Directory Assistance

Design
Design Service is defined as any Special or Plain Old Telephone Service Order which requires BellSouth Design Engineering Activities.

Disposition & Cause
Types of trouble conditions, e.g. No Trouble Found, Central Office Equipment, Customer Premises Equipment, etc.

DLETH
Display Lengthy Trouble History - A history report that gives all activity on a line record for trouble reports in LMOS.

DLR
Detail Line Record - All the basic information maintained on a line record in LMOS, e.g. name, address, facilities, features etc.

DS-0
The worldwide standard speed for one digital voice signal (64000 bps).

DS-1
24 DS-0s (1.544Mb/sec., i.e. carrier systems)

DOE
Direct Order Entry System - An internal BellSouth service order entry system used by BellSouth Service Representatives to input business service orders in BellSouth format.

DOM
Delivery Order Manager - Telcordia product designed for the electronic submission of xDSL Local Service Requests.

DSAP
DOE (Direct Order Entry) Support Application - The BellSouth Operations System which assists a Service Representative or similar carrier agent in negotiating service provisioning commitments for non-designed services and Unbundled Network Elements.

DSAPDDI
DSAP software contract for schedule information.

DSL
Digital Subscriber Line

DUI
Database Update Information

E

E911
Provides callers access to the applicable emergency services bureau by dialing a 3-digit universal telephone number.

EDI
Electronic Data Interchange - The computer-to-computer exchange of inter and/or intra-company business documents in a public standard format.

ESSX
BellSouth Centrex Service

F

Fatal Reject
LSRs electronically rejected from LEO, which checks to see of the LSR has all the required fields correctly populated.

Flow-Through
In the context of this document, LSRs submitted electronically via the CLEC mechanized ordering process that flow through to the BellSouth OSS without manual or human intervention.

FOC
Firm Order Confirmation - A notification returned to the CLEC confirming that the LSR has been received and accepted, including the specified commitment date.

FX
Foreign Exchange

G H

HAL
"Hands Off" Assignment Logic - Front end access and error resolution logic used in interfacing BellSouth Operations Systems such as ATLAS, BOCRIS, LMOS, PSIMS, RSAG and SOCS.

HALCRIS
HAL software contract for CSR information

HDSL
High Density Subscriber Loop/Line

I J K

ILEC
Incumbent Local Exchange Company

INP
Interim Number Portability

ISDN
Integrated Services Digital Network

IPC
Interconnection Purchasing Center

L

LAN
Local Area Network

LAUTO
The automatic processor in the LNP Gateway that validates LSRs and issues service orders.

LCSC
Local Carrier Service Center - The BellSouth center which is dedicated to handling CLEC LSRs, ASRs, and Preordering transactions along with associated expedite requests and escalations.

Legacy System
Term used to refer to BellSouth Operations Support Systems (see OSS)

LENS
Local Exchange Negotiation System - The BellSouth LAN/web server/OS application developed to provide both preordering and ordering electronic interface functions for CLECs.

LEO
Local Exchange Ordering - A BellSouth system which accepts the output of EDI, applies edit and formatting checks, and reformats the Local Service Requests in BellSouth Service Order format.

LERG
Local Exchange Routing Guide

LESOG
Local Exchange Service Order Generator - A BellSouth system which accepts the service order output of LEO and enters the Service Order into the Service Order Control System using terminal emulation technology.

LFACS
Loop Facilities Assessment and Control System

LIDB
Line Information Database

LISC
Local Interconnection Service Center - The center that issues trunk orders.

LMOS
Loop Maintenance Operations System - A BellSouth Operations System that stores the assignment and selected account information for use by downstream OSS and BellSouth personnel during provisioning and maintenance activities.

LMOS HOST
LMOS host computer

LMOSupd
LMOS updates

LMU
Loop Make-up

LMUS

Loop Make-up Service Inquiry

LNP
Local Number Portability - In the context of this document, the capability for a subscriber to retain his current telephone number as he transfers to a different local service provider.

Loops
Transmission paths from the central office to the customer premises.

LRN
Location Routing Number

LSR
Local Service Request – A request for local resale service or unbundled network elements from a CLEC.

M

Maintenance & Repair
The process and function by which trouble reports are passed to BellSouth and by which the related service problems are resolved.

MARCH
BellSouth Operations System which accepts service orders, interprets the coding contained in the service order image, and constructs the specific switching system Recent Change command messages for input into end office switches.

N

NBR
New Business Request

NC
"No Circuits" - All circuits busy announcement.

NIW
Network Information Warehouse

NMLI
Native Mode LAN Interconnection

NPA
Numbering Plan Area

NXX
The "exchange" portion of a telephone number.

O

OASIS
Obtain Availability Services Information System - A BellSouth front-end processor, which acts as an interface between COFFI and RNS. This system takes the USOCs in COFFI and translates them to English for display in RNS.

OASISBSN
OASIS software contract for feature/service

OASISCAR
OASIS software contract for feature/service

OASISLPC
OASIS software contract for feature/service

OASISMTN
OASIS software contract for feature/service

OASISNET
OASIS software contract for feature/service

OASISOCP
OASIS software contract for feature/service

ORDERING
The process and functions by which resale services or unbundled network elements are ordered from BellSouth as well as the process by which an LSR or ASR is placed with BellSouth.

OSPCM
Outside Plant Contract Management System - Provides Scheduling Information.

OSS
Operations Support System - A support system or database which is used to mechanize the flow or performance of work. The term is used to refer to the overall system consisting of hardware complex, computer operating system(s), and application which is used to provide the support functions.

Out Of Service
Customer has no dial tone and cannot call out.

P

PMAP
Performance Measurement Analysis Platform

PMQAP
Performance Measurement Quality Assurance Plan

PON
Purchase Order Number

POTS
Plain Old Telephone Service

PREDICTOR
The BellSouth Operations system which is used to administer proactive maintenance and rehabilitation activities on outside plant facilities, provide access to selected work groups (e.g. RRC & BRC) to Mechanized Loop Testing and switching system I/O ports, and provide certain information regarding the attributes and capabilities of outside plant facilities.

Preordering
The process and functions by which vital information is obtained, verified, or validated prior to placing a service request.

PRI
Primary Rate ISDN

Provisioning
The process and functions by which necessary work is performed to activate a service requested via an LSR or ASR and to initiate the proper billing and accounting functions.

PSIMS

Product/Service Inventory Management System - A BellSouth database Operations System which contains availability information on switching system features and capabilities and on BellSouth service availability. This database is used to verify the availability of a feature or service in an NXX prior to making a commitment to the customer.

PSIMSORB
PSIMS software contract for feature/service.

Q R

RNS
Regional Negotiation System - An internal BellSouth service order entry system used by BellSouth Consumer Services to input service orders in BellSouth format.

ROS
Regional Ordering System

RRC
Residence Repair Center - The BellSouth Consumer Services trouble receipt center which serves residential customers.

RSAG
Regional Street Address Guide - The BellSouth database, which contains street addresses validated to be accurate with state and local governments.

RSAGADDR
RSAG software contract for address search.

RSAGTN
RSAG software contract for telephone number search.

S

SAC
Service Advocacy Center

SEEM
Self Effectuating Enforcement Mechanism

SOCS
Service Order Control System - The BellSouth Operations System which routes service order images among BellSouth drop points and BellSouth Operations Systems during the service provisioning process.

SOG
Service Order Generator - Telcordia product designed to generate a service order for xDSL.

SOIR
Service Order Interface Record - any change effecting activity to a customer account by service order that impacts 911/E911

SONGS
Service Order Negotiation and Generation System.

T

TAFI
Trouble Analysis Facilitation Interface - The BellSouth Operations System that supports trouble receipt center personnel in taking and handling customer trouble reports.

TAG
Telecommunications Access Gateway – TAG was designed to provide an electronic interface, or machine-to-machine interface for the bi-directional flow of information between BellSouth's OSSs and participating CLECs.

TN
Telephone Number

Total Manual Fallout
The number of LSRs which are entered electronically but require manual entering into a service order generator.

U V

UNE
Unbundled Network Element

UCL
Unbundled Copper Link

USOC
Universal Service Order Code

W X Y Z

WATS
Wide Area Telephone Service

WFA
Work Force Administration

WMC
Work Management Center

WTN
Working Telephone Number.

Appendix C: Appendix C: BellSouth Audit Policy

BellSouth currently provides many CLECs with certain audit rights as a part of their individual interconnection agreements. However, it is not reasonable for BellSouth to undergo an audit of the SQM for every CLEC with which it has a contract. BellSouth has developed a proposed Audit Plan for use by the parties to an audit. If requested by a Public Service Commission or by a CLEC exercising contractual audit rights, BellSouth will agree to undergo a comprehensive audit of the aggregate level reports for both BellSouth and the CLEC(s) each of the next five (5) years (2001-2005) to be conducted by an independent third party. The results of that audit will be made available to all the parties subject to proper safeguards to protect proprietary information. This aggregate level audit includes the following specifications:

1. The cost shall be borne 50% by BellSouth and 50% by the CLEC or CLECs.
2. The independent third party auditor shall be selected with input from BellSouth, the PSC, if applicable, and the CLEC(s).
3. BellSouth, the PSC and the CLEC(s) shall jointly determine the scope of the audit.

BellSouth reserves the right to make changes to this audit policy as growth and changes in the industry dictate.

Attachment 10

BellSouth Disaster Recovery Plan

CONTENTS

PAGE

1.0	Purpose	2
2.0	Single Point of Contact	2
3.0	Identifying the Problem	2
3.1	Site Control	3
3.2	Environmental Concerns	4
4.0	The Emergency Control Center (ECC)	4
5.0	Recovery Procedures	5
5.1	CLEC Outage	5
5.2	BellSouth Outage	5
5.2.1	Loss of Central Office	6
5.2.2	Loss of a Central Office with Serving Wire Center Functions	6
5.2.3	Loss of a Central Office with Tandem Functions	6
5.2.4	Loss of a Facility Hub	7
5.3	Combined Outage (CLEC and BellSouth Equipment)	7
6.0	T1 Identification Procedures	7
7.0	Acronyms	8

1.0 PURPOSE

In the unlikely event of a disaster occurring that affects BellSouth's long-term ability to deliver traffic to a Competitive Local Exchange Carrier (CLEC), general procedures have been developed by BellSouth to hasten the recovery process in accordance with the Telecommunications Service Priority (TSP) Program established by the Federal Communications Commission to identify and prioritize telecommunication services that support national security or emergency preparedness (NS/EP) missions. Since each location is different and could be affected by an assortment of potential problems, a detailed recovery plan is impractical. However, in the process of reviewing recovery activities for specific locations, some basic procedures emerge that appear to be common in most cases.

These general procedures should apply to any disaster that affects the delivery of traffic for an extended time period. Each CLEC will be given the same consideration during an outage, and service will be restored as quickly as possible.

This document will cover the basic recovery procedures that would apply to every CLEC.

2.0 SINGLE POINT OF CONTACT

When a problem is experienced, regardless of the severity, the BellSouth Network Management Center (NMC) will observe traffic anomalies and begin monitoring the situation. Controls will be appropriately applied to insure the sanity of BellSouth's network; and, in the event that a switch or facility node is lost, the NMC will attempt to circumvent the failure using available reroutes.

BellSouth's NMC will remain in control of the restoration efforts until the problem has been identified as being a long-term outage. At that time, the NMC will contact BellSouth's Emergency Control Center (ECC) and relinquish control of the recovery efforts. Even though the ECC may take charge of the situation, the NMC will continue to monitor the circumstances and restore traffic as soon as damaged network elements are revitalized.

The telephone number for the BellSouth Network Management Center in Atlanta, as published in Telcordia's National Network Management Directory, is 404-321-2516.

3.0 IDENTIFYING THE PROBLEM

During the early stages of problem detection, the NMC will be able to tell which CLECs are affected by the catastrophe. Further analysis and/or first hand observation will determine if the disaster has affected CLEC equipment only, BellSouth equipment only or a combination. The initial restoration activity will be largely determined by the equipment that is affected.

Once the nature of the disaster is determined and after verifying the cause of the problem, the NMC will initiate reroutes and/or transfers that are jointly agreed upon by the affected CLECs' Network Management Center and the BellSouth NMC. The type and percentage of controls used will depend upon available network capacity. Controls necessary to stabilize the situation will be invoked and the NMC will attempt to re-establish as much traffic as possible.

For long-term outages, recovery efforts will be coordinated by the Emergency Control Center (ECC). Traffic controls will continue to be applied by the NMC until facilities are re-established. As equipment is made available for service, the ECC will instruct the NMC to begin removing the controls and allow traffic to resume.

3.1 SITE CONTROL

In the total loss of building use scenario, what likely exists will be a smoking pile of rubble. This rubble will contain many components that could be dangerous. It could also contain any personnel on the premises at the time of the disaster. For these reasons, the local fire marshal with the assistance of the police will control the site until the building is no longer a threat to surrounding properties and the companies have secured the site from the general public.

During this time, the majority owner of the building should be arranging for a demolition contractor to mobilize to the site with the primary objective of reaching the cable entrance facility for a damage assessment. The results of this assessment would then dictate immediate plans for restoration, both short term and permanent.

In a less catastrophic event, i.e., the building is still standing and the cable entrance facility is usable, the situation is more complex. The site will initially be controlled by local authorities until the threat to adjacent property has diminished. Once the site is returned to the control of the companies, the following events should occur.

An initial assessment of the main building infrastructure systems (mechanical, electrical, fire and life safety, elevators, and others) will establish building needs. Once these needs are determined, the majority owner should lead the building restoration efforts. There may be situations where the site will not be totally restored within the confines of the building. The companies must individually determine their needs and jointly assess the cost of permanent restoration to determine the overall plan of action.

Multiple restoration trailers from each company will result in the need for designated space and installation order. This layout and control is required to maximize the amount of restoration equipment that can be placed at the site, and the priority of placements.

Care must be taken in this planning to ensure other restoration efforts have logistical access to the building. Major components of telephone and building equipment will need to be removed and replaced. A priority for this equipment must also be jointly established to facilitate overall site restoration. (Example: If the AC switchgear has sustained damage, this would be of the highest priority in order to regain power, lighting, and HVAC throughout the building.)

If the site will not accommodate the required restoration equipment, the companies would then need to quickly arrange with local authorities for street closures, rights of way or other possible options available.

3.2 ENVIRONMENTAL CONCERNS

In the worse case scenario, many environmental concerns must be addressed. Along with the police and fire marshal, the state environmental protection department will be on site to monitor the situation.

Items to be concerned with in a large central office building could include:

1. Emergency engine fuel supply. Damage to the standby equipment and the fuel handling equipment could have created "spill" conditions that have to be handled within state and federal regulations.

2. Asbestos-containing materials that may be spread throughout the wreckage. Asbestos could be in many components of building, electrical, mechanical, outside plant distribution, and telephone systems.

3. Lead and acid. These materials could be present in potentially large quantities depending upon the extent of damage to the power room.

4. Mercury and other regulated compounds resident in telephone equipment.

5. Other compounds produced by the fire or heat.

Once a total loss event occurs at a large site, local authorities will control immediate clean up (water placed on the wreckage by the fire department) and site access.

At some point, the companies will become involved with local authorities in the overall planning associated with site clean up and restoration. Depending on the clean up approach taken, delays in the restoration of several hours to several days may occur.

In a less severe disaster, items listed above are more defined and can be addressed individually depending on the damage.

In each case, the majority owner should coordinate building and environmental restoration as well as maintain proper planning and site control.

4.0 THE EMERGENCY CONTROL CENTER (ECC)

The ECC is located in the Midtown 1 Building in Atlanta, Georgia. During an emergency, the ECC staff will convene a group of pre-selected experts to inventory the damage and initiate corrective actions. These experts have regional access to BellSouth's personnel and equipment and will assume control of the restoration activity anywhere in the nine-state area.

In the past, the ECC has been involved with restoration activities resulting from hurricanes, ice storms and floods. They have demonstrated their capabilities during these calamities as well as

during outages caused by human error or equipment failures. This group has an excellent record of restoring service as quickly as possible.

During a major disaster, the ECC may move emergency equipment to the affected location, direct recovery efforts of local personnel and coordinate service restoration activities with the CLECs. The ECC will attempt to restore service as quickly as possible using whatever means is available, leaving permanent solutions, such as the replacement of damaged buildings or equipment, for local personnel to administer.

Part of the ECC's responsibility, after temporary equipment is in place, is to support the NMC efforts to return service to the CLECs. Once service has been restored, the ECC will return control of the network to normal operational organizations. Any long-term changes required after service is restored will be made in an orderly fashion and will be conducted as normal activity.

5.0 RECOVERY PROCEDURES

The nature and severity of any disaster will influence the recovery procedures. One crucial factor in determining how BellSouth will proceed with restoration is whether or not BellSouth's equipment is incapacitated. Regardless of whose equipment is out of service, BellSouth will move as quickly as possible to aid with service recovery; however, the approach that will be taken may differ depending upon the location of the problem.

5.1 CLEC OUTAGE

For a problem limited to one CLEC (or a building with multiple CLECs), BellSouth has several options available for restoring service quickly. For those CLECs that have agreements with other CLECs, BellSouth can immediately start directing traffic to a provisional CLEC for completion. This alternative is dependent upon BellSouth having concurrence from the affected CLECs.

Whether or not the affected CLECs have requested a traffic transfer to another CLEC will not impact BellSouth's resolve to re-establish traffic to the original destination as quickly as possible.

5.2 BELLSOUTH OUTAGE

Because BellSouth's equipment has varying degrees of impact on the service provided to the CLECs, restoring service from damaged BellSouth equipment is different. The outage will probably impact a number of Carriers simultaneously. However, the ECC will be able to initiate immediate actions to correct the problem.

A disaster involving any of BellSouth's equipment locations could impact the CLECs, some more than others. A disaster at a Central Office (CO) would only impact the delivery of traffic to and from that one location, but the incident could affect many Carriers. If the Central Office is a Serving Wire Center (SWC), then traffic from the entire area to those Carriers served from that switch would also be impacted. If the switch functions as an Access Tandem, or there is a tandem in the building, traffic from every CO to every CLEC could be interrupted. A disaster that destroys a facility hub could disrupt various traffic flows, even though the switching equipment may be unaffected.

The NMC would be the first group to observe a problem involving BellSouth's equipment. Shortly after a disaster, the NMC will begin applying controls and finding re-routes for the

completion of as much traffic as possible. These reroutes may involve delivering traffic to alternate Carriers upon receiving approval from the CLECs involved. In some cases, changes in translations will be required. If the outage is caused by the destruction of equipment, then the ECC will assume control of the restoration.

5.2.1 Loss of a Central Office

When BellSouth loses a Central Office, the ECC will

a) Place specialists and emergency equipment on notice;

b) Inventory the damage to determine what equipment and/or functions are lost;

c) Move containerized emergency equipment and facility equipment to the stricken area, if necessary;

d) Begin reconnecting service on a parity basis for Hospitals, Police and other emergency agencies or End Users served by BellSouth or CLEC in accordance with the TSP priority restoration coding scheme entered in the BellSouth Maintenance database immediately prior to the emergency.

5.2.2 Loss of a Central Office with Serving Wire Center Functions

The loss of a Central Office that also serves as a Serving Wire Center (SWC) will be restored as described in Section 5.2.1.

5.2.3 Loss of a Central Office with Tandem Functions

When BellSouth loses a Central Office building that serves as an Access Tandem and as a SWC, the ECC will

a) Place specialists and emergency equipment on notice;

b) Inventory the damage to determine what equipment and/or functions are lost;

c) Move containerized emergency equipment and facility equipment to the stricken area, if necessary;

d) Begin reconnecting service on a parity basis for Hospitals, Police and other emergency agencies or End Users served by BellSouth or CLEC in accordance with the TSP priority restoration coding scheme entered in the BellSouth Maintenance database immediately prior to the emergency;

e) Re-direct as much traffic as possible to the alternate access tandem (if available) for delivery to those CLECs utilizing a different location as a SWC;

f) Begin aggregating traffic to a location near the damaged building. From this location, begin re-establishing trunk groups to the CLECs for the delivery of traffic normally found on the direct trunk groups. (This aggregation point may be the alternate access tandem location or another CO on a primary facility route.)

5.2.4 Loss of a Facility Hub

In the event that BellSouth loses a facility hub, the recovery process is much the same as above. Once the NMC has observed the problem and administered the appropriate controls, the ECC will assume authority for the repairs. The recovery effort will include

a) Placing specialists and emergency equipment on notice;

b) Inventorying the damage to determine what equipment and/or functions are lost;

c) Moving containerized emergency equipment to the stricken area, if necessary;

d) Reconnecting service on a parity basis for Hospitals, Police and other emergency agencies or End Users served by BellSouth or CLEC in accordance with the TSP priority restoration coding scheme entered in the BellSouth Maintenance database immediately prior to the emergency; and

e) If necessary, BellSouth will aggregate the traffic at another location and build temporary facilities. This alternative would be viable for a location that is destroyed and building repairs are required.

5.3 COMBINED OUTAGE (CLEC AND BELLSOUTH EQUIPMENT)

In some instances, a disaster may impact BellSouth's equipment as well as the CLECs'. This situation will be handled in much the same way as described in Section 5.2.3. Since BellSouth and the CLECs will be utilizing temporary equipment, close coordination will be required.

6.0 T1 IDENTIFICATION PROCEDURES

During the restoration of service after a disaster, BellSouth may be forced to aggregate traffic for delivery to a CLEC. During this process, T1 traffic may be consolidated onto DS3s and may become unidentifiable to the Carrier. Because resources will be limited, BellSouth may be forced to "package" this traffic entirely differently than normally received by the CLECs. Therefore, a method for identifying the T1 traffic on the DS3s and providing the information to the Carriers is required.

7.0 ACRONYMS

CLEC	-	Competitive Local Exchange Carrier
CO	-	Central Office (BellSouth)
DS3	-	Facility that carries 28 T1s (672 circuits)
ECC	-	Emergency Control Center (BellSouth)
NMC	-	Network Management Center
SWC	-	Serving Wire Center (BellSouth switch)
T1	-	Facility that carries 24 circuits
TSP	-	Telecommunications Service Priority

Hurricane Information

During a hurricane, BellSouth will make every effort to keep CLECs updated on the status of our network. Information centers will be set up throughout BellSouth Telecommunications. These centers are not intended to be used for escalations, but rather to keep the CLEC informed of network related issues, area damages and dispatch conditions, etc.

Hurricane-related information can also be found on line at http://www.interconnection.bellsouth.com/network/disaster/dis_resp.htm. Information concerning Mechanized Disaster Reports can also be found at this website by clicking on CURRENT MDR REPORTS or by going directly to http://www.interconnection.bellsouth.com/network/disaster/mdrs.htm.

BST Disaster Management Plan

BellSouth maintenance centers have geographical and redundant communication capabilities. In the event of a disaster removing any maintenance center from service another geographical center would assume maintenance responsibilities. The contact numbers will not change and the transfer will be transparent to the CLEC.

Attachment 11

Bona Fide Request and New Business Request Process

BONA FIDE REQUEST AND NEW BUSINESS REQUEST PROCESS

1.0 The Parties agree that DPI is entitled to order any Unbundled Network Element, Interconnection option, service option or Resale Service required to be made available by FCC or Commission requirements pursuant to the Communications Act of 1934, as modified by the Telecommunications Act of 1996 (the "Act"). DPI also shall be permitted to request the development of new or revised facilities or service options which are not required by the Act. Procedures applicable to requesting the addition of such facilities or service options are specified in this Attachment 11.

2.0 BONA FIDE REQUEST

2.1 A Bona Fide Request (BFR) is to be used when DPI makes a request of BellSouth to provide a new or modified Unbundled Network Element, Interconnection option, or other service option (Requested Services) pursuant to the Act that was not previously included in this Agreement.

2.2 A BFR shall be submitted in writing by DPI and shall specifically identify the requested service date, technical requirements, space requirements and/or such other specifications that clearly define the request such that BellSouth has sufficient information to analyze and prepare a response. Such a request shall also include DPI's designation of the request as being pursuant to the Telecommunications Act of 1996 (i.e. a BFR). The request shall be sent to DPI's designated BellSouth Sales contact.

2.3 If BellSouth determines that the preliminary analysis of the requested BFR is of such complexity that it will cause BellSouth to expend inordinate resources to evaluate the BFR, BellSouth shall notify DPI within ten (10) business days of BellSouth's receipt of BFR that a fee will be required prior to the evaluation of the BFR. DPI shall submit such fee within thirty (30) business days of BellSouth's notice that a fee is required. Within thirty (30) business days of BellSouth's receipt of the fee, BellSouth shall respond to DPI by providing a preliminary analysis of such Requested Services that are the subject of the BFR. The preliminary analysis shall either confirm that BellSouth will offer access to the Requested Services or confirm that BellSouth will not offer the Requested Services. If the preliminary analysis states that BellSouth will not offer the Requested Services, BellSouth will provide an explanation of why the request is not technically feasible, does not qualify as a BFR for the Requested Services or is otherwise not required to be provided under the Act. If preliminary analysis of the requested BFR is not of such complexity that it will cause

BellSouth to expend inordinate resources to evaluate the BFR, within thirty (30) business days of its receipt of the BFR, BellSouth shall respond to DPI by providing a preliminary analysis of such Requested Services that are the subject of the BFR. The preliminary analysis shall either confirm that BellSouth will offer access to the Requested Services or confirm that BellSouth will not offer the Requested Services. If the preliminary analysis states that BellSouth will not offer the Requested Services, BellSouth will provide an explanation of why the request is not technically feasible, does not qualify as a BFR for the Requested Services or is otherwise not required to be provided under the Act.

2.4 DPI may cancel a BFR at any time. If DPI cancels the request more than ten (10) business days after submitting the BFR request, DPI shall pay BellSouth's reasonable and demonstrable costs of processing and/or implementing the BFR up to the date of cancellation in addition to any fee submitted in accordance with Section 2.3 above.

2.5 DPI will have thirty (30) business days from receipt of preliminary analysis to accept the preliminary analysis or cancel the BFR as set forth in Section 2.4. Acceptance of the preliminary analysis must be in writing and accompanied by all nonrecurring charges quoted in the preliminary analysis. The nonrecurring charges as stated in the preliminary analysis cover the initial work required to develop the project plan, create the design parameters, and establish all activities and resources required to complete the BFR (Development Costs). Development costs are non-refundable. If DPI fails to respond within this 30-day period, the BFR will be deemed cancelled.

2.5.1 BellSouth shall propose a firm price quote and a detailed implementation plan within thirty (30) business days of receipt of DPI's acceptance of the preliminary analysis.

2.5.2 DPI shall have thirty (30) business days from receipt of firm price quote to accept or deny the firm price quote and submit any additional nonrecurring, non-refundable fees quoted in the firm price quote.

2.6 Unless DPI agrees otherwise, all prices shall be consistent with the pricing principles of the Act, FCC and/or the Commission.

2.7 If DPI believes that BellSouth's firm price quote is not consistent with the requirements of the Act, or if either Party believes that the other is not acting in good faith in requesting, negotiating or processing the BFR, either Party may seek FCC or Commission arbitration, as appropriate, to resolve the dispute. Any such arbitration applicable to Unbundled

Network Elements and/or Interconnection shall be conducted in accordance with standards prescribed in Section 252 of the Act.

2.8 Upon agreement to the rates, terms and conditions of a BFR, an amendment to this Agreement may be required.

3.0 NEW BUSINESS REQUEST

3.1 A New Business Request (NBR) is to be used by DPI to make a request of BellSouth for a new or modified feature or capability of an existing product or service, a new product or service that is not deployed within the BellSouth network or operations and business support systems, or a new or modified service option that was not previously included in this Agreement (Requested Enhanced Services).

3.2 An NBR shall be submitted in writing by DPI and shall specifically identify the requested service date, technical requirements, space requirements and/or such specifications that clearly define the request such that BellSouth has sufficient information to analyze and prepare a response. The request shall be sent to DPI's designated BellSouth Sales contact.

3.3 If BellSouth determines that the preliminary analysis of the requested NBR is of such complexity that it will cause BellSouth to expend inordinate resources to evaluate the NBR, BellSouth shall notify DPI that a fee will be required prior to the evaluation of the NBR. DPI shall submit such fee within ten (10) business days of BellSouth's notice that a fee is required. BellSouth shall use reasonable efforts to respond to the NBR within (30) business days following BellSouth's receipt of the fee by providing a preliminary analysis of such Requested Enhanced Services that are the subject of the NBR. The preliminary analysis shall either confirm that BellSouth will offer access to the Requested Enhanced Services or confirm that BellSouth will not offer the Requested Enhanced Services. If the preliminary analysis states that BellSouth will not offer the Requested Services, BellSouth will provide an explanation of why the request is not technically feasible, does not qualify as an NBR for the Requested Services or is otherwise not required to be provided under the Act. If preliminary analysis of the requested NBR is not of such complexity that it will cause BellSouth to expend inordinate resources to evaluate the NBR, BellSouth will use reasonable efforts to respond to DPI within thirty (30) business days of its receipt of an NBR by providing a preliminary analysis of such Requested Services that are the subject of the NBR. The preliminary analysis shall either confirm that BellSouth will offer access to the Requested Enhanced Services or confirm that BellSouth will not offer the Requested Enhanced Services. If the preliminary analysis states

that BellSouth will not offer the Requested Services, BellSouth will provide an explanation of why the request is not technically feasible, does not qualify as an NBR for the Requested Services or is otherwise not required to be provided under the Act.

3.4 DPI may cancel an NBR at any time. If DPI cancels the request more than ten (10) business days after submitting it, DPI shall pay BellSouth's reasonable and demonstrable costs of processing and/or implementing the NBR up to the date of cancellation in addition to any fee submitted in accordance with Section 3.3 above.

3.5 DPI will have thirty (30) business days from receipt of preliminary analysis to accept the preliminary analysis or cancel the NBR as set forth in section 3.4. Acceptance of the preliminary analysis must be in writing and accompanied by all nonrecurring charges quoted in the preliminary analysis. The nonrecurring charges as stated in the preliminary analysis cover the initial work required to develop the project plan, create the design parameters, and establish all activities and resources required to complete the NBR. If DPI fails to respond within this 30-day period, the NBR will be deemed cancelled.

3.6 If DPI accepts the preliminary analysis, BellSouth shall propose a firm price quote and a detailed implementation plan within sixty (60) business days of receipt of DPI's acceptance of the preliminary analysis and nonrecurring fees quoted in the preliminary analysis.

3.7 DPI shall have thirty (30) business days from receipt of the firm price quote to accept or deny the firm price quote and submit any additional nonrecurring, non-refundable fees quoted in the firm price quote.

3.8 Upon agreement to the terms of a NBR, an amendment to this Agreement, or a separate agreement, may be required.

Amendment to the Agreement
Between
DPI-Teleconnect, LLC
and
BellSouth Telecommunications, Inc.
Dated April 19, 2003

Pursuant to this Amendment, (the "Amendment"), DPI-Teleconnect, LLC (DPI Teleconnect), and BellSouth Telecommunications, Inc. ("BellSouth"), hereinafter referred to collectively as the "Parties," hereby agree to amend that certain Interconnection Agreement between the Parties dated April 19, 2003("Agreement") to be effective thirty (30) calendar days after the date of the last signature executing the Amendment.

WHEREAS, BellSouth and DPI Teleconnect entered into the Agreement on April 19, 2003, and;

WHEREAS, the Parties desire to amend the Agreement in order to modify provisions pursuant to the Federal Communications Commission's (FCC) Order on Remand and Further Notice of proposed Rulemaking (Triennial Order) effective on October 2, 2003;

WHEREAS, the Parties desire to amend the Agreement to reflect other changes as agreed upon by the Parties;

NOW, THEREFORE, in consideration of the mutual provisions contained herein and other good and valuable consideration, the receipt and sufficiency of which are hereby acknowledged, the Parties hereby covenant and agree as follows:

1. The Parties agree to delete Attachment 2, Network Elements and Other Services, in its entirety and replace with Attachment 2 reflected as Amendment Exhibit 1, attached hereto and by reference incorporated into this Amendment.

2. The Parties agree to delete Attachment 6, Pre-Ordering, Ordering, Provisioning, Maintenance and Repair, in its entirety and replace with Attachment 6 reflected as Amendment Exhibit 2, attached hereto and by reference incorporated into this Amendment.

3. All of the other provisions of the Agreement, dated April 19, 2003, shall remain in full force and effect.

4. Either or both of the Parties are authorized to submit this Amendment to the respective state regulatory authorities for approval subject to Section 252(e) of the Federal Telecommunications Act of 1996.

IN WITNESS WHEREOF, the Parties have executed this Agreement the day and year written below.

BellSouth Telecommunications, Inc.	**DPI-Teleconnect, LLC**
By:	By:
Name: Kristen E. Rowe	Name: David M. Pikoff
Title: Director	Title: Chief Operating Officer
Date: 2/10/04	Date: 2/2/04

Attachment 2

Network Elements and Other Services

TABLE OF CONTENTS

1 INTRODUCTION 3

2 UNBUNDLED LOOPS 5

3 LINE SHARING 27

4 LOCAL SWITCHING 34

5 UNBUNDLED NETWORK ELEMENT COMBINATIONS 42

6 TRANSPORT, CHANNELIZATION AND DARK FIBER 46

7 DATABASES 50

8 BELLSOUTH SWITCHED ACCESS (SWA) 8XX TOLL FREE DIALING TEN DIGIT SCREENING SERVICE 51

9 LINE INFORMATION DATABASE (LIDB) 51

10 SIGNALING 54

11 AUTOMATIC LOCATION IDENTIFICATION/DATA MANAGEMENT SYSTEM (ALI/DMS) 60

12 CALLING NAME (CNAM) DATABASE SERVICE 61

13 SERVICE CREATION ENVIRONMENT AND SERVICE MANAGEMENT SYSTEM (SCE/SMS) ADVANCED INTELLIGENT NETWORK (AIN) ACCESS 62

14 OPERATIONAL SUPPORT SYSTEMS (OSS) 62

Rates ..... Exhibit A

ACCESS TO NETWORK ELEMENTS AND OTHER SERVICES

1 Introduction

1.1 This Attachment sets forth rates, terms and conditions for Network Elements and combinations of Network Elements that BellSouth agrees to offer to DPI Teleconnect in accordance with its obligations under Section 251(c)(3) of the Act. Additionally, this Attachment sets forth the rates, terms and conditions for other facilities and services BellSouth makes available to DPI Teleconnect (Other Services). The rates for each Network Element and combination of Network Elements and Other Services are set forth in Exhibit A of this Attachment. Additionally, the provision of a particular Network Element or Other Service may require DPI Teleconnect to purchase other Network Elements or services. In the event of a conflict between this Attachment and any other section or provision of this Agreement, the provisions of this Attachment shall control.

1.2 For purposes of this Agreement**, "**Network Element**"** is defined to mean a facility or equipment DPI Teleconnect used in the provision of a qualifying service, as defined by the FCC. DPI Teleconnect may not access a Network Element for the sole purpose of providing non-qualifying services as defined by the FCC. For purposes of this Agreement, combinations of Network Elements shall be referred to as "Combinations."

1.3 BellSouth shall, upon request of DPI Teleconnect, and to the extent technically feasible, provide to DPI Teleconnect access to its Network Elements for the provision of DPI Teleconnect's qualifying services. If no rate is identified in this Agreement, the rate will be as set forth in the applicable BellSouth tariff or as negotiated by the Parties upon request by either Party.

1.4 DPI Teleconnect may purchase and use Network Elements and Other Services from BellSouth in accordance with 47 C.F.R 51.309.

1.5 BellSouth shall comply with the requirements as set forth in the technical references within this Attachment 2.

1.6 Except to the extent required by the Report and Order on Remand and Further Notice of Proposed Rulemaking (rel. Aug. 21, 2003) ("TRO"), any Network Elements that no longer require unbundling on a national level will no longer be available pursuant to this Agreement.

1.7 Upon request, BellSouth shall convert a wholesale service, or group of wholesale services, to the equivalent unbundled Network Element, or combination of elements that is available to DPI Teleconnect under Section 251(c)(3) of the Telecommunications Act of 1996. Nonrecurring switch-as-is rates for conversion of Network Elements are contained in Exhibit A of this Attachment. Conversion of a wholesale service or group of wholesale services shall be considered

termination for purposes of any volume and/or term commitments and/or grandfathered status between DPI Teleconnect and BellSouth. Any change from a wholesale service to a Network Element that requires a physical rearrangement of the Network Element will not be considered a conversion for purposes of this Agreement.

1.8 Except to the extent expressly provided otherwise in this Attachment, for elements or combinations of elements that are no longer offered pursuant to, or are not in compliance with, the terms set forth in this Agreement (for example, but not limited to, local channels or non-compliant EELs), DPI Teleconnect will submit orders to rearrange or disconnect those arrangements or services within thirty (30) calendar days of the Effective Date of this Amendment. If orders to rearrange or disconnect those arrangements or services are not received by the 31st day after the Effective Date of this Amendment, BellSouth may disconnect those arrangements or services without further notice. Where no re-termination or physical rearrangement of circuits or service is required, DPI Teleconnect will be charged a nonrecurring switch-as-is charge for the individual Network Element(s) as set forth in Exhibit A. For arrangements that require a re-termination or other physical rearrangement of circuits to comply with the terms of this Agreement, nonrecurring charges for the applicable Network Element from Exhibit A of this Attachment will apply. To the extent a Network Element requires re-termination or other physical rearrangement in order to comply with a tariff or separate agreement, the applicable rates, terms and conditions of such tariff or separate agreement shall apply.

1.8.1 DPI Teleconnect may utilize Network Elements and Other Services to provide services as long as such services are consistent with industry standards and applicable BellSouth Technical References.

1.8.2 Except to the extent expressly provided otherwise in this Attachment, if a Network Element is not readily available but can be made available through routine network modifications, as defined by the FCC, DPI Teleconnect may request BellSouth to perform such routine network modifications. Each request will be handled as a project on an individual case basis. BellSouth will provide a price quote for the request, and upon receipt of payment by DPI Teleconnect, BellSouth shall perform the routine network modifications.

1.8.3 Notwithstanding any other provision of this Agreement, BellSouth will not commingle or combine Network Elements or combinations of Network Elements with any service, network element or other offering that it is obligated to make available only pursuant to Section 271 of the Act.

1.9 <u>Commingling of Services</u>

1.9.1 Commingling means the connecting, attaching, or otherwise linking of a Network Element, or a Network Element combination, to one or more telecommunications

services or facilities that DPI Teleconnect has obtained at wholesale from BellSouth, or the combining of a Network Element or Network Element combination with one or more such wholesale telecommunications services or facilities.

1.9.2 Subject to the limitations set forth elsewhere in this Attachment, BellSouth shall not deny access to a Network Element or a combination of Network Elements on the grounds that one or more of the elements: 1) is connected to, attached to, linked to, or combined with such a facility or service obtained from BellSouth; or 2) shares part of BellSouth's network with access services or inputs for non-qualifying services.

1.9.3 BellSouth will not "ratchet" a commingled circuit. Unless otherwise agreed to by the Parties, the Network Element portion of such circuit will be billed at the rates set forth in this Agreement and the remainder of the circuit or service will be billed in accordance with BellSouth's tariffed rates.

1.9.4 When multiplexing equipment is attached to a commingled circuit, the multiplexing equipment and Central Office Channel Interfaces will be billed from the same jurisdictional authorization (agreement or tariff) as the higher grade of service.

1.10 If DPI Teleconnect reports a trouble on a Network Element or Other Service and no trouble actually exists on the BellSouth portion, BellSouth will charge DPI Teleconnect for any dispatching and testing (both inside and outside the Central Office (CO)) required by BellSouth in order to confirm the working status.

1.11 Rates

1.11.1 The prices that DPI Teleconnect shall pay to BellSouth for Network Elements and Other Services are set forth in Exhibit A to this Attachment. If DPI Teleconnect purchases a service(s) from a tariff, all terms and conditions and rates as set forth in such tariff shall apply.

1.11.2 Rates, terms and conditions for order cancellation charges and Service Date Advancement Charges will apply in accordance with Attachment 6 and are incorporated herein by this reference.

1.11.3 If DPI Teleconnect modifies an order (Order Modification Charge (OMC)) after being sent a Firm Order Confirmation (FOC) from BellSouth, any costs incurred by BellSouth to accommodate the modification will be paid by DPI Teleconnect in accordance with FCC No. 1 Tariff, Section 5.

1.11.4 A one-month minimum billing period shall apply to all Network Elements and Other Services.

2 Unbundled Loops

2.1 General

2.1.1 The local loop Network Element (Loop) is defined as a transmission facility between a distribution frame (or its equivalent) in BellSouth's central office and the Loop demarcation point at an End User's customer premises, including inside wire owned by BellSouth. Facilities that do not terminate at a demarcation point at an End User customer premises, including, by way of example, but not limited to, facilities that terminate to another carrier's switch or premises, a cell site, Mobile Switching Center or base station, do not constitute Loops. The Loop Network Element includes all features, functions, and capabilities of the transmission facilities, including the network interface device, and attached electronics (except those used for the provision of advanced services, such as Digital Subscriber Line Access Multiplexers), optronics and intermediate devices (including repeaters and load coils) used to establish the transmission path to the End User's customer premises. DPI Teleconnect shall purchase the entire bandwidth of the Loop and, except as required herein or as otherwise agreed to by the Parties, BellSouth shall not subdivide the frequency of the Loop.

2.1.1.1 The Loop does not include any packet switched features, functions or capabilities.

2.1.1.2 In new build (Greenfield) areas, where BellSouth has only deployed Fiber To The Home (FTTH) facilities, BellSouth is under no obligation to provide Loops.

2.1.1.3 In FTTH overbuild situations where BellSouth also has copper Loops, BellSouth will make those copper Loops available to DPI Teleconnect on an unbundled basis, until such time as BellSouth chooses to retire those copper Loops using the FCC's network disclosure requirements. In these cases, BellSouth will offer a 64kbps second voice grade channel over its FTTH facilities.

2.1.1.4 Furthermore, in FTTH overbuild areas, BellSouth is not obligated to ensure that copper Loops in that area are capable of transmitting signals prior to receiving a request for access to such Loops by DPI Teleconnect. If a request is received by BellSouth for a copper Loop, BellSouth will restore the copper Loop to serviceable condition if technically feasible. In these instances of Loop orders in an FTTH overbuild area, BellSouth's standard Loop provisioning interval will not apply, and the order will be handled on a project basis by which the Parties will negotiate the applicable provisioning interval.

2.1.1.5 For hybrid loops, where DPI Teleconnect seeks access to a hybrid loop for the provision of broadband services, BellSouth shall provide DPI Teleconnect with nondiscriminatory access to the time division multiplexing features, functions and capabilities of that hybrid loop, including DS1 or DS3, on an unbundled basis to establish a complete transmission path between BellSouth's central office and an End User's customer premises.

2.1.1.6 DPI Teleconnect may not purchase Loops or convert Special Access circuits to Loops if such Loops will be used to provide wireless telecommunications services.

2.1.2 The provisioning of a Loop to DPI Teleconnect's collocation space will require cross office cabling and cross connections within the central office to connect the Loop to a local switch or to other transmission equipment. These cross connects are separate components that are not considered a part of the Loop, and thus, have a separate charge.

2.1.3 Where facilities are available, BellSouth will install Loops in compliance with BellSouth's Products and Services Interval Guide available at the website at http://www.interconnection.bellsouth.com. For orders of fifteen (15) or more Loops, the installation and any applicable Order Coordination as described below will be handled on a project basis, and the intervals will be set by the BellSouth project manager for that order. When Loops require a Service Inquiry (SI) prior to issuing the order to determine if facilities are available, the interval for the SI process is separate from the installation interval.

2.1.4 The Loop shall be provided to DPI Teleconnect in accordance with BellSouth's TR73600 Unbundled Local Loop Technical Specification and applicable industry standard technical references.

2.1.5 BellSouth will only provision, maintain and repair the Loops to the standards that are consistent with the type of Loop ordered.

2.1.5.1 When a BellSouth technician is required to be dispatched to provision the Loop, BellSouth will tag the Loop with the Circuit ID number and the name of the ordering CLEC. When a dispatch is not required to provision the Loop, BellSouth will tag the Loop on the next required visit to the End User's location. If DPI Teleconnect wants to ensure the Loop is tagged during the provisioning process for Loops that may not require a dispatch (e.g. UVL-SL1, UVL-SL2, and UCL-ND), DPI Teleconnect may order Loop Tagging. Rates for Loop Tagging are as set forth in Exhibit A of this Attachment.

2.1.5.2 In the event BellSouth must dispatch to the end-user's location more than once due to incorrect or incomplete information provided by DPI Teleconnect (e.g., incomplete address, incorrect contact name/number, etc.), BellSouth will bill DPI Teleconnect for each additional dispatch required to provision the circuit due to the incorrect/incomplete information provided. BellSouth will assess the applicable Trouble Determination rates from BellSouth's FCC or state tariffs.

2.1.6 **Loop Testing/Trouble Reporting**

2.1.6.1 DPI Teleconnect will be responsible for testing and isolating troubles on the Loops. DPI Teleconnect must test and isolate trouble to the BellSouth portion of a designed/non-designed unbundled Loop (e.g., UVL-SL2, UCL-D, UVL-SL1,

UCL-ND, etc.) before reporting repair to the UNE Customer Wholesale Interconnection Network Services (CWINS) Center. Upon request from BellSouth at the time of the trouble report, DPI Teleconnect will be required to provide the results of the DPI Teleconnect test which indicate a problem on the BellSouth provided Loop.

2.1.6.2 Once DPI Teleconnect has isolated a trouble to the BellSouth provided Loop, and had issued a trouble report to BellSouth on the Loop, BellSouth will take the actions necessary to repair the Loop if a trouble actually exists. BellSouth will repair these Loops in the same time frames that BellSouth repairs similarly situated Loops to its End Users.

2.1.6.3 If DPI Teleconnect reports a trouble on a non-designed or designed Loop and no trouble actually exists, BellSouth will charge DPI Teleconnect for any dispatching and testing (both inside and outside the CO) required by BellSouth in order to confirm the Loop's working status.

2.1.6.4 In the event BellSouth must dispatch to the end-user's location more than once due to incorrect or incomplete information provided by DPI Teleconnect (e.g., incomplete address, incorrect contact name/number, etc.), BellSouth will bill DPI Teleconnect for each additional dispatch required to repair the circuit due to the incorrect/incomplete information provided. BellSouth will assess the applicable Trouble Determination rates from BellSouth's FCC or state tariffs.

2.1.7 **Order Coordination and Order Coordination-Time Specific**

2.1.7.1 "Order Coordination" (OC) allows BellSouth and DPI Teleconnect to coordinate the installation of the SL2 Loops, Unbundled Digital Loops (UDL) and other Loops where OC may be purchased as an option, to DPI Teleconnect's facilities to limit End User service outage. OC is available when the Loop is provisioned over an existing circuit that is currently providing service to the End User. OC for physical conversions will be scheduled at BellSouth's discretion during normal working hours on the committed due date. OC shall be provided in accordance with the chart set forth below.

2.1.7.2 "Order Coordination – Time Specific" (OC-TS) allows DPI Teleconnect to order a specific time for OC to take place. BellSouth will make every effort to accommodate DPI Teleconnect's specific conversion time request. However, BellSouth reserves the right to negotiate with DPI Teleconnect a conversion time based on load and appointment control when necessary. This OC-TS is a chargeable option for all Loops except Unbundled Copper Loops (UCL) and is billed in addition to the OC charge. DPI Teleconnect may specify a time between 9:00 a.m. and 4:00 p.m. (location time) Monday through Friday (excluding holidays). If DPI Teleconnect specifies a time outside this window, or selects a time or quantity of Loops that requires BellSouth technicians to work outside normal work hours, overtime charges will apply in addition to the OC and OC-TS

charges. Overtime charges will be applied based on the amount of overtime worked and in accordance with the rates established in the Access Services Tariff, Section E13.2, for each state. The OC-TS charges for an order due on the same day at the same location will be applied on a per Local Service Request (LSR) basis.

2.1.8 **CLEC to CLEC Conversions for Unbundled Loops**

2.1.8.1 The CLEC to CLEC conversion process for unbundled Loops may be used by DPI Teleconnect when converting an existing unbundled Loop from another CLEC for the same End User. The Loop type being converted must be included in DPI Teleconnect's Interconnection Agreement before requesting a conversion.

2.1.8.2 To utilize the CLEC to CLEC conversion process, the Loop being converted must be the same Loop type with no requested changes to the Loop, must serve the same End User location from the same serving wire center, and must not require an outside dispatch to provision.

2.1.8.3 The Loops converted to DPI Teleconnect pursuant to the CLEC to CLEC conversion process shall be provisioned in the same manner and with the same functionality and options as described in this Attachment for the specific Loop type.

2.1.8.4

	Order Coordination (OC)	Order Coordination – Time Specific (OC-TS)	Test Points	DLR	Charge for Dispatch and Testing if No Trouble Found
SL-1 **(Non-Designed)**	Chargeable Option	Chargeable Option	Not available	Chargeable Option – ordered as Engineering Information Document	Charged for Dispatch inside and outside Central Office
UCL-ND **(Non-Designed)**	Chargeable Option	Not Available	Not Available	Chargeable Option – ordered as Engineering Information Document	Charged for Dispatch inside and outside Central Office
Unbundled Voice Loops - SL-2 (including 2- and 4-wire UVL) (Designed)	Included	Chargeable Option	Included	Included	Charged for Dispatch outside Central Office
Unbundled Digital Loop (Designed)	Included	Chargeable Option (except on Universal Digital Channel)	Included (where appropriate)	Included	Charged for Dispatch outside Central Office
Unbundled Copper Loop (Designed)	Chargeable in accordance with Section 2	Not available	Included	Included	Charged for Dispatch outside Central Office
For UVL-SL1 and UCLs, DPI Teleconnect must order and will be billed for both OC and OC-TS if requesting OC-TS.					

2.1.9 **<u>Bulk Migration</u>**

2.1.9.1 If DPI Teleconnect requests to migrate twenty-five (25) or more UNE-Port/Loop Combination (UNE-P) customers to UNE-Loop (UNE-L) in the same Central Office on the same due date, DPI Teleconnect must use the Bulk Migration process, which is described in the BellSouth CLEC Information Package, "UNE-Port/Loop Combination (UNE-P) to UNE-Loop (UNE-L) Bulk Migration." This CLEC Information package, incorporated herein by reference as it may be amended from time to time, is located at

www.interconnection.bellsouth.com/guides/html/unes.html. The rates for the Bulk Migration process shall be the nonrecurring rates associated with the Loop type being requested on the Bulk Migration, as set forth in Exhibit A of this Attachment. Additionally, OSS charges will also apply per LSR generated per customer account as provided for in the Bulk Migration Request. The migration of loops from Integrated Digital Loop Carrier (IDLC) will be done pursuant to Section 2.6 of this Attachment.

2.1.10 **Ordering Guidelines and Processes**

2.1.10.1 For information regarding Ordering Guidelines and Processes for various UNEs, DPI Teleconnect should refer to the "Guides" section of the BellSouth Interconnection website, which is incorporated herein by reference, as amended from time to time. The website address is: http://www.interconnection.bellsouth.com/

2.1.10.2 Additional information may also be found in the individual CLEC Information Packages, as amended from time to time and which are incorporated herein by reference, located at the "CLEC UNE Products" website at the following address: http://www.interconnection.bellsouth.com/guides/html/unes.html

2.2 **Unbundled Voice Loops (UVLs)**

2.2.1 BellSouth shall make available the following UVLs:

2.2.1.1 2-wire Analog Voice Grade Loop – SL1 (Non-Designed)

2.2.1.2 2-wire Analog Voice Grade Loop – SL2 (Designed)

2.2.1.3 4-wire Analog Voice Grade Loop (Designed)

2.2.2 Unbundled Voice Loops (UVL) may be provisioned using any type of facility that will support voice grade services. This may include loaded copper, non-loaded copper, digital loop carrier systems, fiber/copper combination (hybrid loop) or a combination of any of these facilities. BellSouth, in the normal course of maintaining, repairing, and configuring its network, may also change the facilities that are used to provide any given voice grade circuit. This change may occur at any time. In these situations, BellSouth will only ensure that the newly provided facility will support voice grade services. BellSouth will not guarantee that DPI Teleconnect will be able to continue to provide any advanced services over the new facility. BellSouth will offer UVL in two different service levels - Service Level One (SL1) and Service Level Two (SL2).

2.2.3 Unbundled Voice Loop - SL1 (UVL-SL1) Loops are 2-wire Loop start circuits, will be non-designed, and will not have remote access test points. OC will be offered as a chargeable option on SL1 Loops when reuse of existing facilities has

been requested by DPI Teleconnect. DPI Teleconnect may also order OC-TS when a specified conversion time is requested. OC-TS is a chargeable option for any coordinated order and is billed in addition to the OC charge. An Engineering Information (EI) document can be ordered as a chargeable option. The EI document provides Loop Make-Up information which is similar to the information normally provided in a Design Layout Record (DLR). Upon issuance of a non-coordinated order in the service order system, SL1 Loops will be activated on the due date in the same manner and time frames that BellSouth normally activates POTS-type Loops for its End Users.

2.2.4 For an additional charge BellSouth will make available Loop Testing so that DPI Teleconnect may request further testing on new UVL-SL1 Loops. Rates for Loop Testing are as set forth in Exhibit A of this Attachment.

2.2.5 Unbundled Voice Loop – SL2 (UVL-SL2) Loops may be 2-wire or 4-wire circuits, shall have remote access test points, and will be designed with a DLR provided to DPI Teleconnect. SL2 circuits can be provisioned with loop start, ground start or reverse battery signaling. OC is provided as a standard feature on SL2 Loops. The OC feature will allow DPI Teleconnect to coordinate the installation of the Loop with the disconnect of an existing customer's service and/or number portability service. In these cases, BellSouth will perform the order conversion with standard order coordination at its discretion during normal work hours.

2.3 **Unbundled Digital Loops**

2.3.1 BellSouth will offer Unbundled Digital Loops (UDL). UDLs are service specific, will be designed, will be provisioned with test points (where appropriate), and will come standard with OC and a DLR. The various UDLs are intended to support a specific digital transmission scheme or service.

2.3.2 BellSouth shall make available the following UDLs, subject to restrictions set forth herein:

2.3.2.1 2-wire Unbundled ISDN Digital Loop

2.3.2.2 2-wire Unbundled ADSL Compatible Loop

2.3.2.3 2-wire Unbundled HDSL Compatible Loop

2.3.2.4 4-wire Unbundled HDSL Compatible Loop

2.3.2.5 4-wire Unbundled DS1 Digital Loop

2.3.2.6 4-wire Unbundled Digital Loop/DS0 – 64 kbps, 56 kbps and below

2.3.2.7 DS3 Loop

2.3.2.8 STS-1 Loop

2.3.3 2-Wire Unbundled ISDN Digital Loops will be provisioned according to industry standards for 2-Wire Basic Rate ISDN services and will come standard with a test point, OC, and a DLR. DPI Teleconnect will be responsible for providing BellSouth with a Service Profile Identifier (SPID) associated with a particular ISDN-capable Loop and End User. With the SPID, BellSouth will be able to adequately test the circuit and ensure that it properly supports ISDN service.

2.3.3.1 Upon the Effective Date of this Amendment, Universal Digital Channel (UDC) elements will no longer be offered by BellSouth and no new orders for UDC will be accepted. Any existing UDCs that were provisioned prior to the Effective Date of this Amendment will be grandfathered at the rates set forth in the Parties' interconnection agreement that was in effect immediately prior to the Effective Date of this Amendment. Existing UDCs that were provisioned prior to the Effective Date of this Amendment may remain connected, maintained and repaired according to BellSouth's TR73600 until such time as they are disconnected by DPI Teleconnect or BellSouth provides ninety (90) calendar days notice that such UDC must be terminated. DPI Teleconnect may order an ISDN loop, if available, to provide the same functionality as the previously offered UDC product.

2.3.4 2-Wire ADSL-Compatible Loop. This is a designed Loop that is provisioned according to Revised Resistance Design (RRD) criteria and may be up to 18,000 feet long and may have up to 6,000 feet of bridged tap (inclusive of Loop length). The Loop is a 2-wire circuit and will come standard with a test point, OC, and a DLR.

2.3.5 2-Wire or 4-Wire HDSL-Compatible Loop. This is a designed Loop that meets Carrier Serving Area (CSA) specifications, may be up to 12,000 feet long and may have up to 2,500 feet of bridged tap (inclusive of Loop length). It may be a 2-wire or 4-wire circuit and will come standard with a test point, OC, and a DLR.

2.3.6 4-Wire Unbundled DS1 Digital Loop. This is a designed 4-wire Loop that is provisioned according to industry standards for DS1 or Primary Rate ISDN services and will come standard with a test point, OC, and a DLR. A DS1 Loop may be provisioned over a variety of loop transmission technologies including copper, HDSL-based technology or fiber optic transport systems. It will include a 4-Wire DS1 Network Interface at the End User's location.

2.3.7 4-Wire Unbundled Digital/DS0 Loop. These are designed 4-wire Loops that may be configured as 64kbps, 56kbps, 19kbps, and other sub-rate speeds associated with digital data services and will come standard with a test point, OC, and a DLR.

2.3.8 DS3 Loop**.** DS3 Loop is a two-point digital transmission path which provides for simultaneous two-way transmission of serial, bipolar, return-to-zero isochronous digital electrical signals at a transmission rate of 44.736 megabits per second

(Mbps) that is dedicated to the use of the ordering CLEC in its provisioning of local exchange and associated exchange access services. It may provide transport for twenty-eight (28) DS1 channels, each of which provides the digital equivalent of twenty-four (24) analog voice grade channels. The interface to unbundled dedicated DS3 transport is a metallic-based electrical interface.

2.3.9 STS-1 Loop**.** STS-1 Loop is a high-capacity digital transmission path with SONET VT1.5 mapping that is dedicated for the use of the ordering customer for the purpose of provisioning local exchange and associated exchange access services. It is a two-point digital transmission path which provides for simultaneous two-way transmission of serial bipolar return-to-zero synchronous digital electrical signals at a transmission rate of 51.84 megabits per second (Mbps). It may provide transport for twenty-eight (28) DS1 channels, each of which provides the digital equivalent of twenty-four (24) analog voice grade channels. The interface to unbundled dedicated STS-1 transport is a metallic-based electrical interface.

2.3.10 Both DS3 Loop and STS-1 Loop require a Service Inquiry (SI) in order to ascertain availability.

2.3.11 If DS3/STS-1 Loops are not readily available but can be made available through routine network modifications, as defined by the FCC, DPI Teleconnect may request BellSouth to perform such routine network modifications. The request may not be used to place fiber. Each request will be handled as a project on an individual case basis. BellSouth will provide a price quote for the request, and upon receipt of payment by DPI Teleconnect, BellSouth shall perform the routine network modifications.

2.3.12 DS3 services come with a test point and a DLR. Mileage is airline miles, rounded up and a minimum of one mile applies. BellSouth TR 73501 LightGate®Service Interface and Performance Specifications, Issue D, June 1995 applies to DS3 services.

2.3.13 DPI Teleconnect may access a total capacity of two (2) DS3s per End User location at the Network Element rates set forth in Exhibit A.

2.4 **Unbundled Copper Loops (UCL)**

2.4.1 BellSouth shall make available Unbundled Copper Loops (UCLs). The UCL is a copper twisted pair Loop that is unencumbered by any intervening equipment (e.g., filters, load coils, range extenders, digital loop carrier, or repeaters) and is not intended to support any particular telecommunications service. The UCL will be offered in two types – Designed and Non-Designed.

2.4.2 **Unbundled Copper Loop – Designed (UCL-D)**

2.4.2.1 The UCL-D will be provisioned as a dry copper twisted pair (2- or 4-wire) Loop that is unencumbered by any intervening equipment (e.g., filters, load coils, range extenders, digital loop carrier, or repeaters).

2.4.2.2 A UCL-D will be 18,000 feet or less in length and is provisioned according to Resistance Design parameters, may have up to 6,000 feet of bridged tap and will have up to 1300 Ohms of resistance.

2.4.2.3 The UCL-D is a designed circuit, is provisioned with a test point, and comes standard with a DLR. OC is a chargeable option for a UCL-D; however, OC is always required on UCLs where a reuse of existing facilities has been requested by DPI Teleconnect.

2.4.2.4 These Loops are not intended to support any particular services and may be utilized by DPI Teleconnect to provide a wide-range of telecommunications services as long as those services do not adversely affect BellSouth's network. This facility will include a Network Interface Device (NID) at the customer's location for the purpose of connecting the Loop to the customer's inside wire.

2.4.2.5 Upon the Effective Date of this Amendment, Unbundled Copper Loop – Long (UCL-L) elements will no longer be offered by BellSouth and no new orders for UCL-L will be accepted. Any existing UCL-Ls that were provisioned prior to the Effective Date of this Amendment will be grandfathered at the rates set forth in the Parties' interconnection agreement that was in effect immediately prior to the Effective Date of this Amendment. Existing UCL-Ls that were provisioned prior to the Effective Date of this Amendment may remain connected, maintained and repaired according to BellSouth's TR73600 and may remain connected until such time as they are disconnected by DPI Teleconnect or BellSouth provides ninety (90) calendar days notice that such UCL-L must be terminated.

2.4.3 **Unbundled Copper Loop – Non-Designed (UCL-ND)**

2.4.3.1 The UCL–ND is provisioned as a dedicated 2-wire metallic transmission facility from BellSouth's Main Distribution Frame (MDF) to a customer's premises (including the NID). The UCL-ND will be a "dry copper" facility in that it will not have any intervening equipment such as load coils, repeaters, or digital access main lines (DAMLs), and may have up to 6,000 feet of bridged tap between the End User's premises and the serving wire center. The UCL-ND typically will be 1300 Ohms resistance and in most cases will not exceed 18,000 feet in length, although the UCL-ND will not have a specific length limitation. For Loops less than 18,000 feet and with less than 1300 Ohms resistance, the Loop will provide a voice grade transmission channel suitable for Loop start signaling and the transport of analog voice grade signals. The UCL-ND will not be designed and will not be provisioned with either a DLR or a test point.

2.4.3.2 The UCL-ND facilities may be mechanically assigned using BellSouth's assignment systems. Therefore, the Loop Makeup (LMU) process is not required to order and provision the UCL-ND. However, DPI Teleconnect can request LMU for which additional charges would apply.

2.4.3.3 For an additional charge, BellSouth also will make available Loop Testing so that DPI Teleconnect may request further testing on the UCL-ND. Rates for Loop Testing are as set forth in Exhibit A of this Attachment.

2.4.3.4 UCL-ND Loops are not intended to support any particular service and may be utilized by DPI Teleconnect to provide a wide-range of telecommunications services as long as those services do not adversely affect BellSouth's network. The UCL-ND will include a NID at the customer's location for the purpose of connecting the Loop to the customer's inside wire.

2.4.3.5 OC will be provided as a chargeable option and may be utilized when the UCL-ND provisioning is associated with the reuse of BellSouth facilities. OC-TS does not apply to this product.

2.4.3.6 DPI Teleconnect may use BellSouth's Unbundled Loop Modification (ULM) offering to remove excessive bridged taps and/or load coils from any copper Loop within the BellSouth network. Therefore, some Loops that would not qualify as UCL-ND could be transformed into Loops that do qualify, using the ULM process.

2.5 **Unbundled Loop Modifications (Line Conditioning)**

2.5.1 Line Conditioning is defined as routine network modification that BellSouth regularly undertakes to provide xDSL services to its own customers. This may include the removal of any device, from a copper Loop or copper Sub-loop that may diminish the capability of the Loop or Sub-loop to deliver high-speed switched wireline telecommunications capability, including xDSL service. Such devices include, but are not limited to, load coils, excessive bridged taps, low pass filters, and range extenders. Excessive bridged taps are bridged taps that serves no network design purpose and that are beyond the limits set according to industry standards and/or the BellSouth TR 73600.

2.5.2 BellSouth will remove load coils only on copper loops and sub-loops that are less than 18,000 feet in length.

2.5.3 For any copper loop being ordered by DPI Teleconnect which has over 6,000 feet of combined bridged tap will be modified, upon request from DPI Teleconnect, so that the loop will have a maximum of 6,000 feet of bridged tap. This modification will be performed at no additional charge to DPI Teleconnect. Loop conditioning orders that require the removal of bridged tap that serves no network design purpose on a copper loop that will result in a combined total of bridged tap

between 2,500 and 6,000 feet will be performed at the rates set forth in Exhibit A of this Attachment.

2.5.4 DPI Teleconnect may request removal of any unnecessary and non-excessive bridged tap (bridged tap between 0 and 2,500 feet which serves no network design purpose), at rates pursuant to BellSouth's Special Construction Process as mutually agreed to by the Parties.

2.5.5 Rates for ULM are as set forth in Exhibit A of this Attachment.

2.5.6 BellSouth will not modify a Loop in such a way that it no longer meets the technical parameters of the original Loop type (e.g., voice grade, ADSL, etc.) being ordered.

2.5.7 If DPI Teleconnect requests ULM on a reserved facility for a new loop order, BellSouth may perform a pair change and provision a different loop facility in lieu of the reserved facility with ULM if feasible. The loop provisioned will meet or exceed specifications of the requested loop facility as modified. DPI Teleconnect will not be charged for ULM if a different loop is provisioned. For loops that require a DLR or its equivalent, BellSouth will provide LMU detail of the loop provisioned.

2.5.8 DPI Teleconnect shall request Loop make up information pursuant to this Attachment prior to submitting a service inquiry and/or a LSR for the Loop type that DPI Teleconnect desires BellSouth to condition.

2.5.9 When requesting ULM for a Loop that BellSouth has previously provisioned for DPI Teleconnect, DPI Teleconnect will submit a service inquiry to BellSouth. If a spare Loop facility that meets the loop modification specifications requested by DPI Teleconnect is available at the location for which the ULM was requested, DPI Teleconnect will have the option to change the Loop facility to the qualifying spare facility rather than to provide ULM. In the event that BellSouth changes the Loop facility in lieu of providing ULM, DPI Teleconnect will not be charged for ULM but will only be charged the service order charges for submitting an order.

2.6 **Loop Provisioning Involving Integrated Digital Loop Carriers**

2.6.1 Where DPI Teleconnect has requested an Unbundled Loop and BellSouth uses IDLC systems to provide the local service to the End User and BellSouth has a suitable alternate facility available, BellSouth will make such alternative facilities available to DPI Teleconnect. If a suitable alternative facility is not available, then to the extent it is technically feasible, BellSouth will implement one of the following alternative arrangements for DPI Teleconnect (e.g. hairpinning):

1. Roll the circuit(s) from the IDLC to any spare copper that exists to the customer premises.
2. Roll the circuit(s) from the IDLC to an existing DLC that is not integrated.

3. If capacity exists, provide "side-door" porting through the switch.
4. If capacity exists, provide "Digital Access Cross Connect System (DACS)-door" porting (if the IDLC routes through a DACS prior to integration into the switch).

2.6.2 Arrangements 3 and 4 above require the use of a designed circuit. Therefore, non-designed Loops such as the SL1 voice grade and UCL-ND may not be ordered in these cases.

2.6.3 If no alternate facility is available, and upon request from DPI Teleconnect, and if agreed to by both Parties, BellSouth may utilize its Special Construction (SC) process to determine the additional costs required to provision facilities. DPI Teleconnect will then have the option of paying the one-time SC rates to place the Loop.

2.7 **Network Interface Device**

2.7.1 The NID is defined as any means of interconnection of the End User's customer premises wiring to BellSouth's distribution plant, such as a cross connect device used for that purpose. The NID is a single-line termination device or that portion of a multiple line termination device required to terminate a single line or circuit at the premises. The NID features two independent chambers or divisions that separate the service provider's network from the End User's customer premises wiring. Each chamber or division contains the appropriate connection points or posts to which the service provider and the End User each make their connections. The NID provides a protective ground connection and is capable of terminating cables such as twisted pair cable.

2.7.2 BellSouth shall permit DPI Teleconnect to connect DPI Teleconnect's Loop facilities to the End User's customer premises wiring through the BellSouth NID or at any other technically feasible point.

2.7.3 **Access to NID**

2.7.3.1 DPI Teleconnect may access the End User's customer premises wiring by any of the following means and DPI Teleconnect shall not disturb the existing form of electrical protection and shall maintain the physical integrity of the NID:

2.7.3.1.1 BellSouth shall allow DPI Teleconnect to connect its Loops directly to BellSouth's multi-line residential NID enclosures that have additional space and are not used by BellSouth or any other telecommunications carriers to provide service to the premises.

2.7.3.1.2 Where an adequate length of the End User's customer premises wiring is present and environmental conditions permit, either Party may remove the customer premises wiring from the other Party's NID and connect such wiring to that Party's own NID;

2.7.3.1.3 Either Party may enter the subscriber access chamber or dual chamber NID enclosures for the purpose of extending a connect divisioned or spliced jumper wire from the customer premises wiring through a suitable "punch-out" hole of such NID enclosures; or

2.7.3.1.4 DPI Teleconnect may request BellSouth to make other rearrangements to the End User customer premises wiring terminations or terminal enclosure on a time and materials cost basis.

2.7.3.2 In no case shall either Party remove or disconnect the other Party's Loop facilities from either Party's NIDs, enclosures, or protectors unless the applicable Commission has expressly permitted the same and the disconnecting Party provides prior notice to the other Party. In such cases, it shall be the responsibility of the Party disconnecting Loop facilities to leave undisturbed the existing form of electrical protection and to maintain the physical integrity of the NID. It will be DPI Teleconnect's responsibility to ensure there is no safety hazard, and DPI Teleconnect will hold BellSouth harmless for any liability associated with the removal of the BellSouth Loop from the BellSouth NID. Furthermore, it shall be the responsibility of the disconnecting Party, once the other Party's Loop has been disconnected from the NID, to reconnect the disconnected Loop to a nationally recognized testing laboratory listed station protector, which has been grounded as per Article 800 of the National Electrical Code. If no spare station protector exists in the NID, the disconnected Loop must be appropriately cleared, capped and stored.

2.7.3.3 DPI Teleconnect shall not remove or disconnect ground wires from BellSouth's NIDs, enclosures, or protectors.

2.7.3.4 DPI Teleconnect shall not remove or disconnect NID modules, protectors, or terminals from BellSouth's NID enclosures.

2.7.3.5 Due to the wide variety of NID enclosures and outside plant environments, BellSouth will work with DPI Teleconnect to develop specific procedures to establish the most effective means of implementing this section if the procedures set forth herein do not apply to the NID in question.

2.7.4 <u>Technical Requirements</u>

2.7.4.1 The NID shall provide an accessible point of interconnection and shall maintain a connection to ground.

2.7.4.2 If an existing NID is accessed, it shall be capable of transferring electrical analog or digital signals between the End User's customer premises and the distribution media and/or cross connect to DPI Teleconnect's NID.

2.7.4.3 Existing BellSouth NIDs will be provided in "as is" condition. DPI Teleconnect may request BellSouth to do additional work to the NID on a time and material basis. When DPI Teleconnect deploys its own local Loops in a multiple-line termination device, DPI Teleconnect shall specify the quantity of NID connections that it requires within such device.

2.8 **Sub-loop Elements**

2.8.1 Where facilities permit, BellSouth shall offer access to its Unbundled Sub-Loop (USL) elements as specified herein.

2.8.2 **Unbundled Sub-Loop Distribution**

2.8.2.1 The Unbundled Sub-Loop Distribution facility is a dedicated transmission facility that BellSouth provides from an End User's point of demarcation to a BellSouth cross-connect device. The BellSouth cross-connect device may be located within a remote terminal (RT) or a stand-alone cross-box in the field or in the equipment room of a building. The unbundled sub-loop distribution media is a copper twisted pair that can be provisioned as a 2-Wire or 4-Wire facility. BellSouth will make available the following sub-loop distribution offerings where facilities exist:

Unbundled Sub-Loop Distribution – Voice Grade
Unbundled Copper Sub-Loop
Unbundled Sub-Loop Distribution – Intrabuilding Network Cable (aka riser cable)

2.8.2.2 Unbundled Sub-Loop Distribution – Voice Grade (USLD-VG) is a copper sub-loop facility from the cross-box in the field up to and including the point of demarcation at the End User's premises and may have load coils.

2.8.2.3 Unbundled Copper Sub-Loop (UCSL) is a copper facility of any length provided from the cross-box in the field up to and including the End User's point of demarcation. If available, this facility will not have any intervening equipment such as load coils between the End User and the cross-box.

2.8.2.3.1 If DPI Teleconnect requests a UCSL and it is not available, DPI Teleconnect may request the copper Sub-Loop facility be modified pursuant to the ULM process to remove load coils and/or excessive bridged taps. If load coils and/or excessive bridged taps are removed, the facility will be classified as a UCSL.

2.8.2.4 Unbundled Sub-Loop Distribution – Intrabuilding Network Cable (USLD-INC) is the distribution facility owned or controlled by BellSouth inside a building or between buildings on the same property that is not separated by a public street or road. USLD-INC includes the facility from the cross connect device in the building equipment room up to and including the point of demarcation at the End User's premises.

2.8.2.4.1 Upon request for USLD-INC from DPI Teleconnect, BellSouth will install a cross connect panel in the building equipment room for the purpose of accessing USLD-INC pairs from a building equipment room. The cross-connect panel will function as a single point of interconnection (SPOI) for USLD-INC and will be accessible by multiple carriers as space permits. BellSouth will place cross-connect blocks in 25-pair increments for DPI Teleconnect's use on this cross-connect panel. DPI Teleconnect will be responsible for connecting its facilities to the 25-pair cross-connect block(s).

2.8.2.5 For access to Voice Grade USLD and UCSL, DPI Teleconnect shall install a cable to the BellSouth cross-box pursuant to the terms and conditions for physical collocation for remote sites set forth in this Agreement. This cable would be connected by a BellSouth technician within the BellSouth cross-box during the set-up process. DPI Teleconnect's cable pairs can then be connected to BellSouth's USL within the BellSouth cross-box by the BellSouth technician.

2.8.2.6 Through the SI process, BellSouth will determine whether access to Unbundled Sub-Loops at the location requested by DPI Teleconnect is technically feasible and whether sufficient capacity exists in the cross-box. If existing capacity is sufficient to meet DPI Teleconnect's request, then BellSouth will perform the site set-up as described in the CLEC Information Package, located at the website address: http://www.interconnection.bellsouth.com/products/html/unes.html.

2.8.2.7 The site set-up must be completed before DPI Teleconnect can order sub-loop pairs. For the site set-up in a BellSouth cross-connect box in the field, BellSouth will perform the necessary work to splice DPI Teleconnect's cable into the cross-connect box. For the site set-up inside a building equipment room, BellSouth will perform the necessary work to install the cross-connect panel and the connecting block(s) that will be used to provide access to the requested USLs.

2.8.2.8 Once the site set-up is complete, DPI Teleconnect will request sub-loop pairs through submission of a LSR form to the Local Carrier Service Center (LCSC). OC is required with USL pair provisioning when DPI Teleconnect requests reuse of an existing facility, and the Order Coordination charge shall be billed in addition to the USL pair rate. For expedite requests by DPI Teleconnect for sub-loop pairs, expedite charges will apply for intervals less than five (5) calendar days.

2.8.2.9 Unbundled Sub-Loops will be provided in accordance with technical reference TR73600.

2.8.3 **Unbundled Network Terminating Wire (UNTW)**

2.8.3.1 UNTW is unshielded twisted copper wiring that is used to extend circuits from an intra-building network cable terminal or from a building entrance terminal to an individual End User's point of demarcation. It is the final portion of the Loop that

in multi-subscriber configurations represents the point at which the network branches out to serve individual subscribers.

2.8.3.2 This element will be provided in Multi-Dwelling Units (MDUs) and/or Multi-Tenants Units (MTUs) where either Party owns wiring all the way to the End User's premises. Neither Party will provide this element in locations where the property owner provides its own wiring to the End User's premises, where a third party owns the wiring to the End User's premises.

2.8.3.3 Requirements

2.8.3.3.1 On a multi-unit premises, upon request of the other Party (Requesting Party), the Party owning the network terminating wire (Provisioning Party) will provide access to UNTW pairs on an Access Terminal that is suitable for use by multiple carriers at each Garden Terminal or Wiring Closet.

2.8.3.3.2 The Provisioning Party shall not be required to install new or additional NTW beyond existing NTW to provision the services of the Requesting Party.

2.8.3.3.3 In existing MDUs and/or MTUs in which BellSouth does not own or control wiring (INC/NTW) to the End Users premises, DPI Teleconnect will install UNTW Access Terminals for BellSouth at no additional charge.

2.8.3.3.4 In situations in which BellSouth activates a UNTW pair, BellSouth will compensate DPI Teleconnect for each pair activated commensurate to the price specified in DPI Teleconnect's Agreement.

2.8.3.3.5 Upon receipt of the UNTW SI requesting access to the Provisioning Party's UNTW pairs at a multi-unit premises, representatives of both Parties will participate in a meeting at the site of the requested access. The purpose of the site visit will include discussion of the procedures for installation and location of the Access Terminals. By request of the Requesting Party, an Access Terminal will be installed either adjacent to each of the Provisioning Party's Garden Terminal or inside each Wiring Closet. The Requesting Party will deliver and connect its central office facilities to the UNTW pairs within the Access Terminal. The Requesting Party may access any available pair on an Access Terminal. A pair is available when a pair is not being utilized to provide service or where the End User has requested a change in its local service provider to the Requesting Party. Prior to connecting the Requesting Party's service on a pair previously used by the Provisioning Party, the Requesting Party is responsible for ensuring the End User is no longer using the Provisioning Party's service or another CLEC's service before accessing UNTW pairs.

2.8.3.3.6 Access Terminal installation intervals will be established on an individual case basis.

2.8.3.3.7 The Requesting Party is responsible for obtaining the property owner's permission for the Provisioning Party to install an Access Terminal(s) on behalf of the Requesting Party. The submission of the SI by the Requesting Party will serve as certification by the Requesting Party that such permission has been obtained. If the property owner objects to Access Terminal installations that are in progress or subsequent to completion and demands removal of Access Terminals, the Requesting Party will be responsible for costs associated with removing Access Terminals and restoring the property to its original state prior to Access Terminals being installed.

2.8.3.3.8 The Requesting Party shall indemnify and hold harmless the Provisioning Party against any claims of any kind that may arise out of the Requesting Party's failure to obtain the property owner's permission. The Requesting Party will be billed for nonrecurring and recurring charges for accessing UNTW pairs at the time the Requesting Party activates the pair(s). The Requesting Party will notify the Provisioning Party within five (5) business days of activating UNTW pairs using the LSR form.

2.8.3.3.9 If a trouble exists on a UNTW pair, the Requesting Party may use an alternate spare pair that serves that End User if a spare pair is available. In such cases, the Requesting Party will re-terminate its existing jumper from the defective pair to the spare pair. Alternatively, the Requesting Party will isolate and report troubles in the manner specified by the Provisioning Party. The Requesting Party must tag the UNTW pair that requires repair. If the Provisioning Party dispatches a technician on a reported trouble call and no UNTW trouble is found, the Provisioning Party will charge Requesting Party for time spent on the dispatch and testing the UNTW pair(s).

2.8.3.3.10 If the Requesting Party initiates the Access Terminal installation and the Requesting Party has not activated at least ten (10) percent of the capacity of the Access Terminal installed pursuant to the Requesting Party's request for an Access Terminal within six (6) months of installation of the Access Terminal, the Provisioning Party will bill the Requesting Party a nonrecurring charge equal to the actual cost of provisioning the Access Terminal.

2.8.3.3.11 If the Provisioning Party determines that the Requesting Party is using the UNTW pairs without reporting the activation of the pairs, the Requesting Party will be billed for the use of that pair back to the date the End User began receiving service from the Requesting Party at that location. Upon request, the Requesting Party will provide copies of its billing record to substantiate such date. If the Requesting Party fails to provide such records, then the Provisioning Party will bill the Requesting Party back to the date of the Access Terminal installation.

2.8.4 **Unbundled Sub-Loop Feeder**

2.8.4.1 Upon the Effective Date of this Amendment, Unbundled Sub-Loop Feeder (USLF) elements will no longer be offered by BellSouth at TELRIC prices. Within ninety (90) calendar days of the Effective Date of this Amendment, DPI Teleconnect will either negotiate market-based rates for these elements or will issue orders to have these elements disconnected. If, after this ninety (90)-day period, market-based rates have not been negotiated and DPI Teleconnect has not issued the appropriate disconnect orders, BellSouth may immediately disconnect any remaining USLF elements and will bill DPI Teleconnect any applicable disconnect charges.

2.8.5 **Unbundled Loop Concentration**

2.8.5.1 Upon the Effective Date of this Amendment, the Unbundled Loop Concentration (ULC) element will no longer be offered by BellSouth and no new orders for ULC will be accepted. Any existing ULCs that were provisioned prior to the Effective Date of this Amendment will be grandfathered at the rates set forth in the Parties' interconnection agreement that was in effect immediately prior to this Amendment and may remain connected, maintained and repaired according to BellSouth's TR73600 until such time as they are disconnected by DPI Teleconnect, or BellSouth provides ninety (90) calendar days notice that such ULC must be terminated.

2.8.6 **Dark Fiber Loop**

2.8.6.1 Dark Fiber Loop is an unused optical transmission facility, without attached signal regeneration, multiplexing, aggregation or other electronics, from the demarcation point at an End User's premises to the End User's serving wire center. Dark Fiber Loops may be strands of optical fiber existing in aerial or underground structure. BellSouth will not provide line terminating elements, regeneration or other electronics necessary for DPI Teleconnect to utilize Dark Fiber Loops.

2.8.6.2 If Dark Fiber Loop is not readily available but can be made available through routine network modifications, as defined by the FCC, DPI Teleconnect may request BellSouth to perform such routine network modifications. The request may not be used to place fiber. Each request will be handled as a project on an individual case basis. BellSouth will provide a price quote for the request, and upon receipt of payment by DPI Teleconnect, BellSouth shall perform the routine network modifications.

2.8.6.3 Requirements

2.8.6.3.1 BellSouth shall make available Dark Fiber Loop where it exists in BellSouth's network and where, as a result of future building or deployment, it becomes available. Dark Fiber Loop will not be deemed available if: (1) it is used by BellSouth for maintenance and repair purposes; (2) it is designated for use pursuant to a firm order placed by another customer; (3) it is restricted for use by all carriers, including BellSouth, because of transmission problems or because it is

scheduled for removal due to documented changes to roads and infrastructure; or (4) BellSouth has plans to use the fiber within a two-year planning period. BellSouth is not required to place the fiber for Dark Fiber Loop if none is available.

2.8.6.3.2 DPI Teleconnect is solely responsible for testing the quality of the Dark Fiber to determine its usability and performance specifications.

2.8.6.3.3 BellSouth shall use its commercially reasonable efforts to provide to DPI Teleconnect information regarding the location, availability and performance of Dark Fiber Loop within ten (10) business days after receiving a SI from DPI Teleconnect.

2.8.6.3.4 If the requested Dark Fiber Loop is available, BellSouth shall use commercially reasonable efforts to provision the Dark Fiber Loop to DPI Teleconnect within twenty (20) business days after DPI Teleconnect submits a valid, error free LSR. Provisioning includes identification of appropriate connection points (e.g., Light Guide Interconnection (LGX)) to enable DPI Teleconnect to connect DPI Teleconnect provided transmission media (e.g., optical fiber) or equipment to the Dark Fiber Loop.

2.9 **Loop Makeup**

2.9.1 Description of Service

2.9.1.1 BellSouth shall make available to DPI Teleconnect LMU information so that DPI Teleconnect can make an independent judgment about whether the Loop is capable of supporting the advanced services equipment DPI Teleconnect intends to install and the services DPI Teleconnect wishes to provide. This section addresses LMU as a preordering transaction, distinct from DPI Teleconnect ordering any other service(s). Loop Makeup Service Inquiries (LMUSI) and mechanized LMU queries for preordering LMU are likewise unique from other preordering functions with associated SIs as described in this Agreement.

2.9.1.2 BellSouth will provide DPI Teleconnect LMU information consisting of the composition of the Loop material (copper/fiber); the existence, location and type of equipment on the Loop, including but not limited to digital loop carrier or other remote concentration devices, feeder/distribution interfaces, bridged taps, load coils, pair-gain devices; the Loop length; the wire gauge and electrical parameters.

2.9.1.3 BellSouth’s LMU information is provided to DPI Teleconnect as it exists either in BellSouth's databases or in its hard copy facility records. BellSouth does not guarantee accuracy or reliability of the LMU information provided.

2.9.1.4 BellSouth’s provisioning of LMU information to the requesting CLEC for facilities is contingent upon either BellSouth or the requesting CLEC controlling the

Loop(s) that serve the service location for which LMU information has been requested by the CLEC. The requesting CLEC is not authorized to receive LMU information on a facility used or controlled by another CLEC unless BellSouth receives a Letter of Authorization (LOA) from the voice CLEC (owner) or its authorized agent on the LMUSI submitted by the requesting CLEC.

2.9.1.5 DPI Teleconnect may choose to use equipment that it deems will enable it to provide a certain type and level of service over a particular BellSouth Loop as long as that equipment does not disrupt other services on the BellSouth network. The determination shall be made solely by DPI Teleconnect and BellSouth shall not be liable in any way for the performance of the advanced data services provisioned over said Loop. The specific Loop type (ADSL, HDSL, or otherwise) ordered on the LSR must match the LMU of the Loop reserved taking into consideration any requisite line conditioning. The LMU data is provided for informational purposes only and does not guarantee DPI Teleconnect's ability to provide advanced data services over the ordered Loop type. Further, if DPI Teleconnect orders Loops that do not require a specific facility medium (i.e. copper only) or Loops that are not intended to support advanced services (such as UV-SL1, UV-SL2, or ISDN compatible Loops) and that are not inventoried as advanced services Loops, the LMU information for such Loops is subject to change at any time due to modifications and/or upgrades to BellSouth's network. DPI Teleconnect is fully responsible for any of its service configurations that may differ from BellSouth's technical standard for the Loop type ordered.

2.9.2 **Submitting Loop Makeup Service Inquiries**

2.9.2.1 DPI Teleconnect may obtain LMU information by submitting a mechanized LMU query or a Manual LMUSI. Mechanized LMUs should be submitted through BellSouth's OSS interfaces. After obtaining the Loop information from the mechanized LMU process, if DPI Teleconnect needs further Loop information in order to determine Loop service capability, DPI Teleconnect may initiate a separate Manual Service Inquiry for a separate nonrecurring charge as set forth in Exhibit A of this Attachment.

2.9.2.2 Manual LMUSIs shall be submitted according to the guidelines in the LMU CLEC Information Package, incorporated herein by reference, as it may be amended from time to time, which can be found at the following BellSouth website: http://interconnection.bellsouth.com/guides/html/unes.html . The service interval for the return of a Manual LMUSI is three (3) business days. Manual LMUSIs are not subject to expedite requests. This service interval is distinct from the interval applied to the subsequent service order.

2.9.3 **Loop Reservations**

2.9.3.1 For a Mechanized LMUSI, DPI Teleconnect may reserve up to ten (10) Loop facilities. For a Manual LMUSI, DPI Teleconnect may reserve up to three (3) Loop facilities.

2.9.3.2 DPI Teleconnect may reserve facilities for up to four (4) business days for each facility requested through LMU from the time the LMU information is returned to DPI Teleconnect. During and prior to DPI Teleconnect placing an LSR, the reserved facilities are rendered unavailable to other customers, including BellSouth. If DPI Teleconnect does not submit an LSR for a UNE service on a reserved facility within the four (4)-day reservation timeframe, the reservation of that spare facility will become invalid and the facility will be released.

2.9.3.3 Charges for preordering Manual LMUSI or Mechanized LMU are separate from any charges associated with ordering other services from BellSouth.

2.9.3.4 All LSRs issued for reserved facilities shall reference the facility reservation number as provided by BellSouth. DPI Teleconnect will not be billed any additional LMU charges for the Loop ordered on such LSR. If, however, DPI Teleconnect does not reserve facilities upon an initial LMUSI, DPI Teleconnect's placement of an order for an advanced data service type facility will incur the appropriate billing charges to include SI and reservation per Exhibit A of this Attachment.

2.9.3.5 Where DPI Teleconnect has reserved multiple Loop facilities on a single reservation, DPI Teleconnect may not specify which facility shall be provisioned when submitting the LSR. For those occasions, BellSouth will assign to DPI Teleconnect, subject to availability, a facility that meets the BellSouth technical standards of the BellSouth type Loop as ordered by DPI Teleconnect.

3 Line Sharing

3.1 General

3.1.1 Line Sharing is defined as the process by which DPI Teleconnect provides digital subscriber line service over the same copper loop that BellSouth uses to provide voice service, with BellSouth using the low frequency portion of the loop and DPI Teleconnect using the high frequency spectrum (as defined below) of the loop.

3.1.2 Line Sharing arrangements in service as of October 1, 2003, will be grandfathered until the earlier of the date the End User discontinues or moves service with DPI Teleconnect. Grandfathered arrangements pursuant to this Section will be billed at the rates set forth in Exhibit A.

3.1.3 For the period from October 2, 2003, through October 1, 2004, DPI Teleconnect may request new Line Sharing arrangements. For Line Sharing arrangements placed in service between October 2, 2003, and October 1, 2004, the rates will be

as set forth in Exhibit A. After October 1, 2004, DPI Teleconnect may not request new Line Sharing arrangements under the terms of this Agreement.

3.1.4 The rates set forth herein will be applied retroactively back to the date set forth in the Triennial Review Order.

3.1.5 As of the earlier of October 2, 2006, or the date that the End User discontinues or moves service with DPI Teleconnect, all Line Sharing arrangements pursuant to Section 3.1.3 of this Attachment shall be terminated.

3.1.6 The High Frequency Spectrum is defined as the frequency range above the voiceband on a copper Loop facility carrying analog circuit-switched voiceband transmissions. Access to the High Frequency Spectrum is intended to allow DPI Teleconnect the ability to provide Digital Subscriber Line (xDSL) data services to the End User for which BellSouth provides voice services. The High Frequency Spectrum shall be available for any version of xDSL complying with Spectrum Management Class 5 of ANSI T1.417, American National Standard for Telecommunications, Spectrum Management for Loop Transmission Systems. BellSouth will continue to have access to the low frequency portion of the Loop spectrum (from 300 Hertz to at least 3000 Hertz, and potentially up to 3400 Hertz, depending on equipment and facilities) for the purposes of providing voice service. DPI Teleconnect shall only use xDSL technology that is within the PSD mask for Spectrum Management Class 5 as found in the above-mentioned document.

3.1.7 Access to the High Frequency Spectrum requires an unloaded, 2-wire copper Loop. An unloaded Loop is a copper Loop with no load coils, low-pass filters, range extenders, DAMLs, or similar devices and minimal bridged taps consistent with ANSI T1.413 and T1.601.

3.1.8 BellSouth will provide Loop Modification to DPI Teleconnect on an existing Loop in accordance with procedures as specified in Section 2 of this Attachment. BellSouth is not required to modify a Loop for access to the High Frequency spectrum if modification of that Loop significantly degrades BellSouth's voice service. If DPI Teleconnect requests that BellSouth modify a Loop and such modification significantly degrades the voice services on the Loop, DPI Teleconnect shall pay for the Loop to be restored to its original state.

3.1.9 Line Sharing shall only be available on Loops on which BellSouth is also providing, and continues to provide, analog voice service directly to the End User. In the event the End User terminates its BellSouth provided voice service for any reason, or in the event BellSouth disconnects the End User's voice service pursuant to its tariffs or applicable law, and DPI Teleconnect desires to continue providing xDSL service on such Loop, DPI Teleconnect shall be required to purchase a full stand-alone Loop UNE. To the extent commercially practicable, BellSouth shall give DPI Teleconnect notice in a reasonable time prior to

disconnect, which notice shall give DPI Teleconnect an adequate opportunity to notify BellSouth of its intent to purchase such Loop. In those cases in which BellSouth no longer provides voice service to the End User and DPI Teleconnect purchases the full stand-alone Loop, DPI Teleconnect may elect the type of Loop it will purchase. DPI Teleconnect will pay the appropriate recurring and nonrecurring rates for such Loop as set forth in Exhibit A to this Attachment. In the event DPI Teleconnect purchases a voice grade Loop, DPI Teleconnect acknowledges that such Loop may not remain xDSL compatible.

3.1.10 If DPI Teleconnect reports a trouble on the High Frequency Spectrum of a Loop and no trouble actually exists on the BellSouth portion, BellSouth will charge DPI Teleconnect for any dispatching and testing (both inside and outside the CO) required by BellSouth in order to confirm the working status. The rates charged for no trouble found (NTF) shall be as set forth in Exhibit A of this Attachment.

3.1.11 Only one CLEC shall be permitted access to the High Frequency Spectrum of any particular Loop.

3.2 **Provisioning of Line Sharing and Splitter Space**

3.2.1 BellSouth will provide DPI Teleconnect with access to the High Frequency Spectrum as follows:

3.2.1.1 To order High Frequency Spectrum on a particular Loop, DPI Teleconnect must have a Digital Subscriber Line Access Multiplexer (DSLAM) collocated in the central office that serves the End User of such Loop.

3.2.1.2 DPI Teleconnect may provide its own splitters or may order splitters in a central office once it has installed its DSLAM in that central office. BellSouth will install splitters within thirty-six (36) calendar days of DPI Teleconnect's submission of an error free Line Splitter Ordering Document (LSOD) to the BellSouth Complex Resale Support Group.

3.2.1.3 Once a splitter is installed on behalf of DPI Teleconnect in a central office in which DPI Teleconnect is located, DPI Teleconnect shall be entitled to order the High Frequency Spectrum on lines served out of that central office. BellSouth will bill and DPI Teleconnect shall pay the electronic or manual ordering charges as applicable when DPI Teleconnect orders High Frequency Spectrum for End User service.

3.2.1.4 BellSouth shall test the data portion of the Loop to ensure the continuity of the wiring for DPI Teleconnect's data.

3.3 **BellSouth Provided Splitter – Line Sharing**

3.3.1 BellSouth will select, purchase, install, and maintain a central office POTS splitter and provide DPI Teleconnect access to data ports on the splitter. The splitter will route the High Frequency Spectrum on the circuit to DPI Teleconnect's xDSL equipment in DPI Teleconnect's collocation space. At least thirty (30) calendar days before making a change in splitter suppliers, BellSouth will provide DPI Teleconnect with a carrier notification letter, informing DPI Teleconnect of change. DPI Teleconnect shall purchase ports on the splitter in increments of eight (8), twenty-four (24), or ninety-six (96) ports in Alabama, Florida, Georgia, Kentucky, Louisiana, Mississippi, North Carolina and South Carolina. DPI Teleconnect shall purchase ports on the splitter in increments of twenty-four (24) or ninety-six (96) ports in Tennessee.

3.3.2 BellSouth will install the splitter in (i) a common area close to DPI Teleconnect's collocation area, if possible; or (ii) in a BellSouth relay rack as close to DPI Teleconnect's DS0 termination point as possible. DPI Teleconnect shall have access to the splitter for test purposes, regardless of where the splitter is placed in the BellSouth premises. For purposes of this section, a common area is defined as an area in the central office in which both Parties have access to a common test access point. A Termination Point is defined as the point of termination for DPI Teleconnect on the main distributing frame in the central office and is not the demarcation point set forth in Attachment 4 of this Agreement. BellSouth will cross-connect the splitter data ports to a specified DPI Teleconnect DS0 at such time that a DPI Teleconnect End User's service is established.

3.4 **CLEC Provided Splitter – Line Sharing**

3.4.1 DPI Teleconnect may at its option purchase, install and maintain central office POTS splitters in its collocation arrangements. DPI Teleconnect may use such splitters for access to its customers and to provide digital line subscriber services to its customers using the High Frequency Spectrum. Existing Collocation rules and procedures and the terms and conditions relating to Collocation set forth in Attachment 4-Central Office shall apply.

3.4.2 Any splitters installed by DPI Teleconnect in its collocation arrangement shall comply with ANSI T1.413, Annex E, or any future ANSI splitter Standards. DPI Teleconnect may install any splitters that BellSouth deploys or permits to be deployed for itself or any BellSouth affiliate.

3.5 **Ordering – Line Sharing**

3.5.1 DPI Teleconnect shall use BellSouth's LSOD to order splitters from BellSouth and to activate and deactivate DS0 Collocation Connecting Facility Assignments (CFA) for use with High Frequency Spectrum.

3.5.2 BellSouth will provide DPI Teleconnect the LSR format to be used when ordering the High Frequency Spectrum.

3.5.3 BellSouth will provision High Frequency Spectrum in compliance with BellSouth's Products and Services Interval Guide available at the website at http://www.interconnection.bellsouth.com.

3.5.4 BellSouth will provide DPI Teleconnect access to Preordering LMU in accordance with the terms of this Agreement. BellSouth shall bill and DPI Teleconnect shall pay the rates for such services, as described in Exhibit A.

3.6 **Maintenance and Repair – Line Sharing**

3.6.1 DPI Teleconnect shall have access for repair and maintenance purposes to any Loop for which it has access to the High Frequency Spectrum. If DPI Teleconnect is using a BellSouth owned splitter, DPI Teleconnect may access the Loop at the point where the combined voice and data signal exits the central office splitter via a bantam test jack. If DPI Teleconnect provides its own splitter, it may test from the collocation space or the Termination Point.

3.6.2 BellSouth will be responsible for repairing voice services and the physical line between the NID at the customer's premises and the Termination Point. DPI Teleconnect will be responsible for repairing data services. Each Party will be responsible for maintaining its own equipment.

3.6.3 DPI Teleconnect shall inform its End Users to direct data problems to DPI Teleconnect, unless both voice and data services are impaired, in which event the End Users should call BellSouth.

3.6.4 Once a Party has isolated a trouble to the other Party's portion of the Loop, the Party isolating the trouble shall notify the End User that the trouble is on the other Party's portion of the Loop.

3.6.5 Notwithstanding anything else to the contrary in this Agreement, when BellSouth receives a voice trouble and isolates the trouble to the physical collocation arrangement belonging to DPI Teleconnect, BellSouth will notify DPI Teleconnect. DPI Teleconnect will provide at least one but no more than two (2) verbal CFA pair changes to BellSouth in an attempt to resolve the voice trouble. In the event a CFA pair change resolves the voice trouble, DPI Teleconnect will provide BellSouth an LSR with the new CFA pair information within twenty-four (24) hours. If the owner of the collocation space fails to resolve the trouble by providing BellSouth with the verbal CFA pair changes, BellSouth may discontinue DPI Teleconnect's access to the High Frequency Spectrum on such Loop. BellSouth will not be responsible for any loss of data as a result of this action.

3.7 **Line Splitting**

3.7.1 Line splitting allows a provider of data services (a Data LEC) and a provider of voice services (a Voice CLEC) to deliver voice and data service to End Users over

the same Loop. The Voice CLEC and Data LEC may be the same or different carriers.

3.7.2 In the event DPI Teleconnect provides its own switching or obtains switching from a third party, DPI Teleconnect may engage in line splitting arrangements with another CLEC using a splitter, provided by DPI Teleconnect, in a Collocation Arrangement at the central office where the loop terminates into a distribution frame or its equivalent.

3.7.3 Where DPI Teleconnect is purchasing a UNE-port and a UNE-loop, BellSouth shall offer line splitting pursuant to the following sections in this Attachment.

3.7.4 DPI Teleconnect shall provide BellSouth with a signed LOA between it and the Data LEC or Voice CLEC with which it desires to provision Line Splitting services, if DPI Teleconnect will not provide voice and data services.

3.7.5 End Users currently receiving voice service from a Voice CLEC through a UNE-P may be converted to Line Splitting arrangements by DPI Teleconnect or its authorized agent ordering Line Splitting Service. If the CLEC wishes to provide the splitter, the UNE-P arrangement will be converted to a stand-alone UNE Loop, a UNE port, two collocation cross connects and the high frequency spectrum line activation. If BellSouth owns the splitter, the UNE-P arrangement will be converted to a stand-alone UNE Loop, port, and one collocation cross connection.

3.7.6 When End Users on Loops using High Frequency Spectrum CO Based line sharing service are converted to Line Splitting, BellSouth will discontinue billing DPI Teleconnect for the High Frequency Spectrum. BellSouth will continue to bill the Data LEC for all associated splitter charges if the Data LEC continues to use a BellSouth splitter. It is the responsibility of DPI Teleconnect or its authorized agent to determine if the Loop is compatible for Line Splitting Service. DPI Teleconnect or its authorized agent may use the existing Loop unless it is not compatible with the Data LEC's data service and DPI Teleconnect or its authorized agent submits an LSR to BellSouth to change the Loop.

3.8 **Provisioning Line Splitting and Splitter Space**

3.8.1 The Data LEC, Voice CLEC or BellSouth may provide the splitter. When DPI Teleconnect or its authorized agent owns the splitter, Line Splitting requires the following: a non-designed analog Loop from the serving wire center to the NID at the End User's location; a collocation cross connection connecting the Loop to the collocation space; a second collocation cross connection from the collocation space connected to a voice port; the high frequency spectrum line activation, and a splitter. The Loop and port cannot be a Loop and port combination (i.e. UNE-P), but must be individual stand-alone Network Elements. When BellSouth owns the splitter, Line Splitting requires the following: a non designed analog Loop from

the serving wire center to the NID at the End User's location with CFA and splitter port assignments, and a collocation cross connection from the collocation space connected to a voice port.

3.8.2 An unloaded 2-wire copper Loop must serve the End User. The meet point for the Voice CLEC and the Data LEC is the point of termination on the MDF for the Data LEC's cable and pairs.

3.8.3 The foregoing procedures are applicable to migration to Line Splitting Service from a UNE-P arrangement, BellSouth Retail Voice Service, BellSouth High Frequency Spectrum (CO Based) Line Sharing.

3.8.4 For other migration scenarios to line splitting, BellSouth will work cooperatively with CLECs to develop methods and procedures to develop a process whereby a Voice CLEC and a Data LEC may provide services over the same Loop.

3.9 Ordering – Line Splitting

3.9.1 DPI Teleconnect shall use BellSouth's LSOD to order splitters from BellSouth and to activate and deactivate DS0 Collocation CFA for use with Line Splitting.

3.9.2 BellSouth shall provide DPI Teleconnect the LSR format to be used when ordering Line Splitting service.

3.9.3 BellSouth will provision Line Splitting service in compliance with BellSouth's Products and Services Interval Guide available at the website at http://www.interconnection.bellsouth.com.

3.9.4 BellSouth will provide DPI Teleconnect access to Preordering LMU in accordance with the terms of this Agreement. BellSouth shall bill and DPI Teleconnect shall pay the rates for such services as described in Exhibit A.

3.9.5 BellSouth will provide Loop modification to DPI Teleconnect on an existing Loop in accordance with procedures developed in the Line Sharing Collaborative. High Frequency Spectrum (CO Based) Unbundled Loop Modification is a separate distinct service from Unbundled Loop Modification set forth in Section 2.5 of this Attachment. Procedures for High Frequency Spectrum (CO Based) Unbundled Loop Modification may be found on the web at: http://www.interconnection.bellsouth.com/html/unes.html. Nonrecurring rates for this offering are as set forth in Exhibit A of this Attachment.

3.10 Maintenance – Line Splitting

3.10.1 BellSouth will be responsible for repairing voice services and the physical loop between the NID at the customer's premises and the termination point. DPI

Teleconnect will be responsible for maintaining the voice and data services. Each Party will be responsible for maintaining its own equipment.

3.10.2 DPI Teleconnect shall inform its End Users to direct all problems to DPI Teleconnect or its authorized agent.

3.10.3 If DPI Teleconnect is not the data provider, DPI Teleconnect shall indemnify, defend and hold harmless BellSouth from and against any claims, losses, actions, causes of action, suits, demands, damages, injury, and costs including reasonable attorney fees, which arise out of actions related to the data provider.

4 Local Switching

4.1 BellSouth shall provide non-discriminatory access to local circuit switching capability and local tandem switching capability on an unbundled basis, except as set forth in the Sections below to DPI Teleconnect for the provision of a telecommunications service.

4.2 Local Circuit Switching Capability, including Tandem Switching Capability

4.2.1 Local circuit switching capability is defined as all line-side and trunk-side facilities, plus the features, functions, and capabilities of the switch. The features, functions, and capabilities of the switch shall include the basic switching function of connecting lines to lines, lines to trunks, trunks to lines, and trunks to trunks. Local circuit switching includes all vertical features that the switch is capable of providing, including custom calling, custom local area signalling service features, and Centrex, as well as any technically feasible customized routing functions.

4.2.2 Notwithstanding BellSouth's general duty to unbundle local circuit switching, BellSouth shall not be required to unbundle local circuit switching for DPI Teleconnect when DPI Teleconnect: (1) serves an End User with four (4) or more voice-grade (DS0) equivalents or lines served by BellSouth in Zone 1 of one of the following MSAs: Atlanta, GA; Miami, FL; Orlando, FL; Ft. Lauderdale, FL; Charlotte-Gastonia-Rock Hill, NC; Greensboro-Winston Salem-High Point, NC; Nashville, TN; and New Orleans, LA; or (2) serves an End User with a DS1 or higher capacity Loop in any service area covered by this Agreement. To the extent that DPI Teleconnect is serving any End User as described in (2) above as of October 2, 2003, such arrangement may not remain in place any longer than April 1, 2004, after which such arrangement must be terminated by DPI Teleconnect or BellSouth shall convert such arrangement to tariff pricing. The filing of this Agreement with the applicable Commission shall constitute the filing of the joint transition plan specified by the FCC.

4.2.3 Rates for unbundled switching at the DS1 level and above or for combinations with unbundled switching at the DS1 level and above provisioned prior to the

Effective Date of this Amendment shall be those rates set forth in Exhibit A of this Attachment until April 1, 2004.

4.2.4 Local Switching that is not required to be provided as a UNE will be provided pursuant to a separate agreement or a tariff, at BellSouth's discretion.

4.2.5 Unbundled Local Switching consists of three separate unbundled elements: Unbundled Ports, End Office Switching Functionality, and End Office Interoffice Trunk Ports.

4.2.6 Unbundled Local Switching combined with Common Transport and, if necessary, Tandem Switching provides to DPI Teleconnect's End User local calling and the ability to presubscribe to a primary carrier for intraLATA and/or to presubscribe to a primary carrier for interLATA toll service.

4.2.7 Provided that DPI Teleconnect purchases unbundled local switching from BellSouth and uses the BellSouth Carrier Identification Code (CIC) for its End Users' Local Preferred Interexchange Carrier (LPIC) or if a BellSouth local End User selects BellSouth as its LPIC, then the Parties will consider as local any calls originated by a DPI Teleconnect local End User, or originated by a BellSouth local End User and terminated to a DPI Teleconnect local End User, where such calls originate and terminate in the same LATA, except for those calls originated and terminated through switched access arrangements (i.e., calls that are transported by a Party other than BellSouth). For such calls, BellSouth will charge DPI Teleconnect the UNE elements for the BellSouth facilities utilized. Neither Party shall bill the other originating or terminating switched access charges for such calls. Intercarrier compensation for local calls between BellSouth and DPI Teleconnect shall be as described in BellSouth's UNE Local Call Flows set forth on BellSouth's website.

4.2.8 Where DPI Teleconnect purchases unbundled local switching from BellSouth but does not use the BellSouth CIC for its End Users' LPIC, BellSouth will consider as local those direct dialed telephone calls that originate from a DPI Teleconnect End User and terminate within the basic local calling area or within the extended local calling areas and that are dialed using seven (7) or ten (10) digits as defined and specified in Section A3 of BellSouth's General Subscriber Services Tariffs (GSST). For such local calls, BellSouth will charge DPI Teleconnect the UNE elements for the BellSouth facilities utilized. Intercarrier compensation for local calls between BellSouth and DPI Teleconnect shall be as described in BellSouth's UNE Local Call Flows set forth on BellSouth's website.

4.2.9 For any calls that originate and terminate through switched access arrangements (i.e., calls that are transported by a party other than BellSouth), BellSouth shall bill DPI Teleconnect the UNE elements for the BellSouth facilities utilized. Each Party may bill the toll provider originating or terminating switched access charges as appropriate.

4.2.10 **Unbundled Port Features**

4.2.10.1 Charges for Unbundled Port are as set forth in Exhibit A, and as specified in such exhibit, may or may not include individual features.

4.2.10.2 Where applicable and available, non-switch-based services may be ordered with the Unbundled Port at BellSouth's retail rates.

4.2.10.3 Any features that are not currently available but are technically feasible through the switch can be requested through the BFR/NBR process.

4.2.10.4 BellSouth will provide to DPI Teleconnect selective routing of calls to a requested Operator System platform pursuant to this Attachment. Any other routing requests by DPI Teleconnect will be made pursuant to the BFR/NBR Process as set forth in Attachment 11**.**

4.2.11 **Remote Call Forwarding**

4.2.11.1 As an option, BellSouth shall make available to DPI Teleconnect an unbundled port with Remote Call Forwarding capability (URCF service). URCF service combines the functionality of unbundled local switching, tandem switching and common transport to forward calls from the URCF service telephone number (the number dialed by the calling party) to another telephone number selected by the URCF service subscriber. When ordering URCF service, DPI Teleconnect will ensure that the following conditions are satisfied:

4.2.11.1.1 That the End User of the forward-to number (service) agrees to receive calls forwarded using the URCF service (if such End User is different from the URCF service End User);

4.2.11.1.2 That the forward-to number (service) is equipped with sufficient capacity to receive the volume of calls that will be generated from the URCF service;

4.2.11.1.3 That the URCF service will not be utilized to forward calls to another URCF or similar service; and

4.2.11.1.4 That the forward-to number (service) is not a public safety number (e.g. 911, fire or police number).

4.2.11.2 In addition to the charge for the URCF service port, BellSouth shall charge DPI Teleconnect the rates set forth in Exhibit A for unbundled local switching, tandem switching, and common transport, including all associated usage incurred for calls from the URCF service telephone number (the number dialed by the calling party) to the forward-to number (service).

4.2.12 **Provision for Local Switching**

4.2.12.1 BellSouth shall perform routine testing (e.g., Mechanized Loop Tests (MLT) and test calls such as 105, 107 and 108 type calls) and fault isolation on a mutually agreed upon schedule.

4.2.12.2 BellSouth shall control congestion points such as those caused by radio station call-ins and network routing abnormalities. All traffic shall be restricted in a non-discriminatory manner.

4.2.12.3 BellSouth shall perform manual call trace and permit customer originated call trace. BellSouth shall provide Switching Service Point (SSP) capabilities and signaling software to interconnect the signaling links destined to the Signaling Transfer Point Switch (STPS). These capabilities shall adhere to the technical specifications set forth in the applicable industry standard technical references.

4.2.12.4 BellSouth shall provide interfaces to adjuncts through Telcordia standard interfaces. These adjuncts can include, but are not limited to, the Service Circuit Node and Automatic Call Distributors. BellSouth shall offer to DPI Teleconnect all Advanced Intelligent Network (AIN) triggers in connection with its SMS/SCE offering.

4.2.12.5 BellSouth shall provide access to SS7 Signaling Network or Multi-Frequency trunking if requested by DPI Teleconnect.

4.2.13 **Local Switching Interfaces**.

4.2.13.1 DPI Teleconnect shall order ports and associated interfaces compatible with the services it wishes to provide as listed in Exhibit A. BellSouth shall provide the following local switching interfaces:

4.2.13.1.1 Standard Tip/Ring interface including loopstart or groundstart, on-hook signaling (e.g., for calling number, calling name and message waiting lamp);

4.2.13.1.2 Coin phone signaling;

4.2.13.1.3 Basic Rate Interface ISDN adhering to appropriate Telcordia Technical Requirements;

4.2.13.1.4 Two-wire analog interface to PBX;

4.2.13.1.5 Four-wire analog interface to PBX;

4.2.13.1.6 Four-wire DS1 interface to PBX or customer provided equipment (e.g. computers and voice response systems);

4.2.13.1.7 Primary Rate ISDN to PBX adhering to ANSI standards Q.931, Q.932 and appropriate Telcordia Technical Requirements;

4.2.13.1.8 Switched Fractional DS1 with capabilities to configure Nx64 channels (where N = 1 to 24); and

4.2.13.1.9 Loops adhering to Telcordia TR-NWT-08 and TR-NWT-303 specifications to interconnect Digital Loop Carriers.

4.2.14 All End Users of DPI Teleconnect who have service provisioned via 4-Wire ISDN DS1 Port with E911 Locator Capability shall physically be located in the E911 Tandem Switch service area.

4.2.15 DPI Teleconnect shall pass its End User's telephone number to BellSouth over the Primary Interface (PRI) trunk group via ANI or via direct Centralized Automated Message Accounting (CAMA) trunks to the appropriate E911 tandem switch.

4.2.16 DPI Teleconnect shall maintain the individual telephone number and the correct corresponding address/location data, including maintaining the End User listed address as the actual physical End User location in the E911 Automatic Location Identification (ALI) Database.

4.2.17 DPI Teleconnect will be responsible and liable for any errors resulting from the submission of invalid telephone number and address/location data for the CLEC's End Users.

4.3 **Tandem Switching**

4.3.1 The Tandem Switching capability Network Element is defined as: (i) trunk-connect facilities, which include, but are not limited to, the connection between trunk termination at a cross connect panel and switch trunk card; (ii) the basic switch trunk function of connecting trunks to trunks; and (iii) the functions that are centralized in the Tandem Switches (as distinguished from separate end office switches), including but not limited to call recording, the routing of calls to operator services and signaling conversion features.

4.3.1.1 Where DPI Teleconnect utilizes portions of the BellSouth network in originating or terminating traffic, the Tandem Switching rates are applied in call scenarios where the Tandem Switching Network Element has been utilized. Because switch recordings cannot accurately indicate on a per call basis when the Tandem Switching Network Element has been utilized for an interoffice call originating from a UNE port and terminating to a BellSouth, Independent Company or Facility-Based CLEC office, BellSouth has developed, based upon call studies, a melded rate that takes into account the average percentage of calls that utilize Tandem Switching in these scenarios. BellSouth shall apply the melded Tandem Switching rate for every call in these scenarios. BellSouth shall utilize the melded Tandem Switching Rate until BellSouth has the capability to measure actual Tandem Switch usage in each call scenario specifically mentioned above, at which point the rate for the actual Tandem Switch usage shall apply. The UNE Call

Flows set forth on BellSouth's website, as amended from time to time and incorporated herein by this reference, illustrate when the full or melded Tandem Switching rates apply for specific scenarios.

4.3.2 Technical Requirements

4.3.2.1 Tandem Switching shall have the same capabilities or equivalent capabilities as those described in Telcordia TR-TSY-000540 Issue 2R2, Tandem Supplement, June 1, 1990. The requirements for Tandem Switching include but are not limited to the following:

4.3.2.1.1 Tandem Switching shall provide signaling to establish a tandem connection;

4.3.2.1.2 Tandem Switching will provide screening as jointly agreed to by DPI Teleconnect and BellSouth;

4.3.2.1.3 Where applicable, Tandem Switching shall provide AIN triggers supporting AIN features where such routing is not available from the originating end office switch, to the extent such Tandem switch has such capability;

4.3.2.1.4 Where applicable, Tandem Switching shall provide access to Toll Free number database;

4.3.2.1.5 Tandem Switching shall provide connectivity to Public Safety Answering Point (PSAP)s where 911 solutions are deployed and the tandem is used for 911; and

4.3.2.1.6 Where appropriate, Tandem Switching shall provide connectivity for the purpose of routing transit traffic to and from other carriers.

4.3.2.2 BellSouth may perform testing and fault isolation on the underlying switch that is providing Tandem Switching. Such testing shall be testing routinely performed by BellSouth. The results and reports of the testing shall be made available to DPI Teleconnect.

4.3.2.3 BellSouth shall control congestion points and network abnormalities. All traffic will be restricted in a non-discriminatory manner.

4.3.2.4 Tandem Switching shall process originating toll free traffic received from DPI Teleconnect’s local switch.

4.3.2.5 In support of AIN triggers and features, Tandem Switching shall provide SSP capabilities when these capabilities are not available from the Local Switching Network Element to the extent such Tandem Switch has such capability.

4.3.3 Upon DPI Teleconnect’s purchase of overflow trunk groups, Tandem Switching shall provide an alternate routing pattern for DPI Teleconnect’s traffic overflowing from direct end office high usage trunk groups.

4.4 **AIN Selective Carrier Routing for Operator Services, Directory Assistance and Repair Centers**

4.4.1 Where BellSouth provides local switching to DPI Teleconnect, BellSouth will provide AIN Selective Carrier Routing (AIN SCR) at the request of DPI Teleconnect. AIN SCR will provide DPI Teleconnect with the capability of routing operator calls, 0+ and 0- and 0+ NPA Local Numbering Plan Area (LNPA), 555-1212 directory assistance, 1+411 directory assistance and 611 repair center calls to pre-selected destinations.

4.4.2 DPI Teleconnect shall order AIN SCR through its Account Team and/or Local Contract Manager. AIN SCR must first be established regionally and then on a per central office per state basis.

4.4.3 AIN SCR is not available in DMS 10 switches.

4.4.4 Where AIN SCR is utilized by DPI Teleconnect, the routing of DPI Teleconnect's End User calls shall be pursuant to information provided by DPI Teleconnect and stored in BellSouth's AIN SCR Service Control Point database. AIN SCR shall utilize a set of Line Class Codes (LCCs) unique to a basic class of service assigned on an "as needed" basis. The same LCCs will be assigned in each central office where AIN SCR is established.

4.4.5 Upon ordering AIN SCR Regional Service, DPI Teleconnect shall remit to BellSouth the Regional Service Order nonrecurring charges set forth in Exhibit A of this Attachment. There shall be a nonrecurring End Office Establishment Charge per office due at the addition of each central office where AIN SCR will be utilized. Said nonrecurring charge shall be as set forth in Exhibit A of this Attachment. For each DPI Teleconnect End User activated, there shall be a nonrecurring End User Establishment charge as set forth in Exhibit A of this Attachment. DPI Teleconnect shall pay the AIN SCR Per Query Charge set forth in Exhibit A of this Attachment.

4.4.6 This Regional Service Order nonrecurring charge will be non-refundable and will be paid with one half due up-front with the submission of all fully completed required forms including: Regional Selective Carrier Routing (SCR) Order Request-Form A, Central Office AIN SCRSCR Order Request - Form B, AIN SCR Central Office Identification Form - Form C, AIN SCR Routing Options Selection Form - Form D, and Routing Combinations Table - Form E. BellSouth has thirty (30) calendar days to respond to DPI Teleconnect's fully completed firm order as a Regional Service Order. With the delivery of this firm order response to DPI Teleconnect, BellSouth considers that the delivery schedule of this service commences. The remaining half of the Regional Service Order payment must be paid when at least ninety (90) percent of the Central Offices listed on the original order have been turned up for the service.

4.4.7 The nonrecurring End Office Establishment Charge will be billed to DPI Teleconnect following BellSouth's normal monthly billing cycle for this type of order.

4.4.8 End-User Establishment Orders will not be turned-up until the second payment is received for the Regional Service Order. The nonrecurring End-User Establishment Charges will be billed to DPI Teleconnect following BellSouth's normal monthly billing cycle for this type of order.

4.4.9 Additionally, the AIN SCR Per Query Charge will be billed to DPI Teleconnect following the normal billing cycle for per query charges.

4.4.10 All other network components needed, for example, unbundled switching, unbundled local transport, etc., will be billed per contracted rates.

4.5 Selective Call Routing Using Line Class Codes (SCR-LCC)

4.5.1 Where DPI Teleconnect purchases unbundled local switching from BellSouth and utilizes an operator services provider other than BellSouth, BellSouth will route DPI Teleconnect's End User calls to that provider through Selective Call Routing.

4.5.2 Selective Call Routing using Line Class Codes (SCR-LCC) provides the capability for DPI Teleconnect to have its Operator Call Processing/Directory Assistance (OCP/DA) calls routed to BellSouth's OCP/DA platform for BellSouth provided Custom Branded or Unbranded OCP/DA or to its own or an alternate OCP/DA platform for Self-Branded OCP/DA. SCR-LCC is only available if line class code capacity is available in the requested BellSouth end office switches.

4.5.3 Custom Branding for Directory Assistance (DA) is not available for certain classes of service, including but not limited to Hotel/Motel services, WATS service, and certain PBX services.

4.5.4 Where available, DPI Teleconnect specific and unique LCCs are programmed in each BellSouth end office switch where DPI Teleconnect intends to serve End Users with customized OCP/DA branding. The LCCs specifically identify DPI Teleconnect's End Users so OCP/DA calls can be routed over the appropriate trunk group to the requested OCP/DA platform. Additional LCCs are required in each end office if the end office serves multiple NPAs (i.e., a unique LCC is required per NPA), and/or if the end office switch serves multiple rate areas and DPI Teleconnect intends to provide DPI Teleconnect -branded OCP/DA to its End Users in these multiple rate areas.

4.5.5 SCR-LCC supporting Custom Branding and Self Branding require DPI Teleconnect to order dedicated trunking from each BellSouth end office identified by DPI Teleconnect, either to the BellSouth Traffic Operator Position System (TOPS) for Custom Branding or to the DPI Teleconnect Operator Service

Provider for Self Branding. Separate trunk groups are required for Operator Services and for DA. Rates for trunks are set forth in applicable BellSouth tariffs.

4.5.6 Unbranding - Unbranded DA and/or OCP calls ride common trunk groups provisioned by BellSouth from those end offices identified by DPI Teleconnect to the BellSouth TOPS.

4.5.7 The Rates for SCR-LCC are as set forth in this Attachment. There is a nonrecurring charge for the establishment of each LCC in each BellSouth central office. Furthermore, for Unbranded and Custom Branded OCP/DA provided by BellSouth Operator Services with unbundled ports and unbundled port/loop switch combinations, monthly recurring usage charges shall apply for the UNEs necessary to provide the service, such as end office and tandem switching and common transport. A flat rated end office switching charge shall apply to Self-Branded OCP/DA when used in conjunction with unbundled ports and unbundled port/loop switch combinations.

5 Unbundled Network Element Combinations

5.1 For purposes of this Section, references to "Currently Combined" Network Elements shall mean that the particular Network Elements requested by DPI Teleconnect are in fact already combined by BellSouth in the BellSouth network. References to "Ordinarily Combined" Network Elements shall mean that the particular Network Elements requested by DPI Teleconnect are not already combined by BellSouth in the location requested by DPI Teleconnect but are elements that are typically combined in BellSouth's network. References to "Not Typically Combined" Network Elements shall mean that the particular Network Elements requested by DPI Teleconnect are not elements that BellSouth combines for its use in its network.

5.1.1 Upon request, BellSouth shall perform the functions necessary to combine unbundled Network Elements in any manner, even if those elements are not ordinarily combined in BellSouth's network, provided that such combination is technically feasible and will not undermine the ability of other carriers to obtain access to unbundled Network Elements or to interconnect with BellSouth's network.

5.2 Enhanced Extended Links (EELs)

5.2.1 EELs are combinations of unbundled Loops and unbundled dedicated transport as defined in this Attachment, together with any facilities, equipment, or functions necessary to combine those Network Elements. BellSouth shall provide DPI Teleconnect with EELs where the underlying UNEs are available and in all instances where the requesting carrier meets the eligibility requirements, if applicable.

5.2.2 High-capacity EELs are combinations of loop and transport UNEs or commingled loop and transport facilities at the DS1 and/or DS3 level as described in 47 CFR 51.318(b). High-capacity EELs must comply with the service eligibility requirements set forth in 5.2.4 below.

5.2.3 By placing an order for a high-capacity EEL, DPI Teleconnect thereby certifies that the service eligibility criteria set forth herein are met for access to a converted high-capacity EEL, a new high-capacity EEL, or part of a high-capacity commingled EEL as a UNE. BellSouth shall have the right to audit DPI Teleconnect's high-capacity EELs as specified below.

5.2.4 If a high-capacity EEL or Ordinarily Combined Network Element is not readily available but can be made available through routine network modifications, as defined by the FCC, DPI Teleconnect may request BellSouth to perform such routine network modifications. The request may not be used to place fiber. Each request will be handled as a project on an individual case basis. BellSouth will provide a price quote for the request, and upon receipt of payment by DPI Teleconnect, BellSouth shall perform the routine network modifications.

5.2.5 <u>Service Eligibility Criteria</u>

5.2.5.1 DPI Teleconnect must certify for each high-capacity EEL that all of the following service eligibility criteria are met:

5.2.5.1.1 DPI Teleconnect has received state certification to provide local voice service in the area being served;

5.2.5.2 For each combined circuit, including each DS1 circuit, each DS1 EEL, and each DS1-equivalent circuit on a DS3 EEL:

5.2.5.2.1 1) Each circuit to be provided to each End User will be assigned a local number prior to the provision of service over that circuit;

5.2.5.2.2 2) Each DS1-equivalent circuit on a DS3 EEL must have its own local number assignment so that each DS3 must have at least twenty-eight (28) local voice numbers assigned to it;

5.2.5.2.3 3) Each circuit to be provided to each End User will have 911 or E911 capability prior to provision of service over that circuit;

5.2.5.2.4 4) Each circuit to be provided to each End User will terminate in a collocation arrangement that meets the requirements of 47 CFR 51.318(c);

5.2.5.2.5 5) Each circuit to be provided to each End User will be served by an interconnection trunk over which DPI Teleconnect will transmit the calling party's number in connection with calls exchanged over the trunk;

5.2.5.2.6 6) For each twenty-four (24) DS1 EELs or other facilities having equivalent capacity, DPI Teleconnect will have at least one (1) active DS1 local service interconnection trunk over which DPI Teleconnect will transmit the calling party's number in connection with calls exchanged over the trunk;

5.2.5.2.7 7) Each circuit to be provided to each End User will be served by a switch capable of switching local voice traffic.

5.2.6 BellSouth may, on an annual basis, audit DPI Teleconnect's records in order to verify compliance with the qualifying service eligibility criteria. The audit shall be conducted by a third party independent auditor, and the audit must be performed in accordance with the standards established by the American Institute for Certified Public Accountants (AICPA). To the extent the independent auditor's report concludes that DPI Teleconnect failed to comply with the service eligibility criteria, DPI Teleconnect must true-up any difference in payments, convert all noncompliant circuits to the appropriate service, and make the correct payments on a going-forward basis. In the event the auditor's report concludes that , DPI Teleconnect did not comply in any material respect with the service eligibility criteria, DPI Teleconnect shall reimburse BellSouth for the cost of the independent auditor. To the extent the auditor's report concludes that DPI Teleconnect did comply in all material respects with the service eligibility criteria, BellSouth will reimburse DPI Teleconnect for its reasonable and demonstrable costs associated with the audit. DPI Teleconnect will maintain appropriate documentation to support its certifications.

5.2.7 In the event DPI Teleconnect converts special access services to UNEs, DPI Teleconnect shall be subject to the termination liability provisions in the applicable special access tariffs, if any.

5.3 <u>UNE Port/Loop Combinations</u>

5.3.1 Combinations of port and loop unbundled Network Elements along with switching and transport unbundled Network Elements provide local exchange service for the origination or termination of calls. Port/loop combinations support the same local calling and feature requirements as described in the Unbundled Local Switching or Port section of this Attachment and the ability to presubscribe to a primary carrier for intraLATA toll service and/or to presubscribe to a primary carrier for interLATA toll service.

5.3.2 BellSouth is not required to provide combinations of port and loop Network Elements on an unbundled basis in locations where, pursuant to FCC and Commission rules, BellSouth is not required to provide local circuit switching as an unbundled Network Element.

5.3.3 BellSouth shall not be required to provide local circuit switching as a UNE in density Zone 1, as defined in 47 CFR 69.123 as of January 1, 1999 of the Atlanta, GA; Miami, FL; Orlando, FL; Ft. Lauderdale, FL; Charlotte-Gastonia-Rock Hill, NC; Greensboro-Winston Salem-High Point, NC; Nashville, TN; and New Orleans, LA, MSAs to DPI Teleconnect if DPI Teleconnect's customer has four (4) or more DS0 equivalent lines.

5.3.4 BellSouth shall not be required to provide local circuit switching as a UNE or combination of UNEs if the End User is being served by a BellSouth DS1 or higher capacity Loop in any service area covered by this Agreement. To the extent that DPI Teleconnect is serving any End User as described above as of October 2, 2003, such arrangement may not remain in place any longer than April 1, 2004, after which such arrangement must be terminated by DPI Teleconnect or BellSouth shall convert such arrangement to tariff pricing. The filing of this Agreement with the applicable Commission shall constitute the filing of the joint transition plan specified by the FCC.

5.3.5 BellSouth shall make 911 updates in the BellSouth 911 database for DPI Teleconnect's UNE port/Loop combinations. BellSouth will not bill DPI Teleconnect for 911 surcharges. DPI Teleconnect is responsible for paying all 911 surcharges to the applicable governmental agency.

5.4 <u>Rates</u>

5.4.1 The rates for the Currently Combined Network Elements specifically set forth in Exhibit A of this Attachment shall be the rates associated with such combinations. Where a Currently Combined combination is not specifically set forth in Exhibit A, the rate for such Currently Combined combination of Network Elements shall be the sum of the recurring rates for those individual Network Elements in addition to the applicable non-recurring switch-as-is charge set forth in Exhibit A.

5.4.2 The rates for the Ordinarily Combined Network Elements specifically set forth in Exhibit A of this Attachment shall be the non-recurring and recurring charges for those combinations. Where an Ordinarily Combined combination is not specifically set forth in Exhibit A, the rate for such Ordinarily Combined combination of Network Elements shall be the sum of the recurring and non-recurring rates for those individual Network Elements as set forth in Exhibit A.

5.4.3 Except as set forth in this Section 5, BellSouth shall provide UNE port/loop combinations specifically set forth in Exhibit A that are Currently Combined or Ordinarily Combined in BellSouth's network at the cost-based rates in Exhibit A.

5.4.4 BellSouth shall provide other Currently Combined and Ordinarily Combined and Not Typically Combined UNE Combinations to DPI Teleconnect in addition to those specifically referenced in this Section 5 above, where available. To the extent DPI Teleconnect requests a combination for which BellSouth does not have

rates and methods and procedures in place to provide such combination, rates and/or methods and procedures for such combination will be developed pursuant to the BFR/NBR process.

6 Transport, Channelization and Dark Fiber

6.1 Transport

6.1.1 BellSouth shall provide nondiscriminatory access, in accordance with FCC Rules 51.311, 51.319, and Section 251(c)(3) of the Act to interoffice transmission facilities described in this Section 6 on an unbundled basis to DPI Teleconnect for the provision of a qualifying service, as set forth herein.

6.1.1.1 Dedicated Transport is defined as BellSouth's interoffice transmission facilities, dedicated to a particular customer or carrier that DPI Teleconnect uses for transmission between wire centers or switches owned by BellSouth and within the same LATA.

6.1.1.2 Dark Fiber Transport, defined as BellSouth's optical transmission facilities without attached signal regeneration, multiplexing, aggregation or other electronics, between wire centers or switches owned by BellSouth and within the same LATA;

6.1.1.3 Common (Shared) Transport, defined as transmission facilities shared by more than one carrier, including BellSouth, between end office switches, between end office switches and tandem switches, and between tandem switches, in BellSouth's network. Where BellSouth Network Elements are connected by intraoffice wiring, such wiring is provided as part of the Network Element and is not Common (Shared) Transport.

6.1.1.3.1 Notwithstanding any other provision of this Agreement, BellSouth will only provide unbundled access to Common (Shared) Transport to the extent BellSouth is required to provide and is providing unbundled Local Circuit Switching to DPI Teleconnect.

6.1.2 BellSouth shall:

6.1.2.1 Provide DPI Teleconnect exclusive use of Dedicated Transport to a particular customer or carrier, or shared use of the features, functions, and capabilities of interoffice transmission facilities shared by more than one customer or carrier;

6.1.2.2 Provide all technically feasible features, functions, and capabilities of the transport facility;

6.1.2.3 Permit, to the extent technically feasible, DPI Teleconnect to connect such interoffice facilities to equipment designated by DPI Teleconnect, including but not limited to, DPI Teleconnect's collocated facilities; and

6.1.2.4 Permit, to the extent technically feasible, DPI Teleconnect to obtain the functionality provided by BellSouth's digital cross-connect systems.

6.1.3 Technical Requirements of Common (Shared) Transport

6.1.3.1 Common (Shared) Transport provided on DS1, DS3, and STS-1 circuits shall at a minimum meet the performance, availability, jitter, and delay requirements specified for Central Office to Central Office (CO to CO) connections in the applicable industry standards.

6.1.3.2 BellSouth shall be responsible for the engineering, provisioning, and maintenance of the underlying equipment and facilities that are used to provide Common (Shared) Transport.

6.1.3.3 At a minimum, Common (Shared) Transport shall meet all of the requirements set forth in the applicable industry standards.

6.2 **Dedicated Transport**

6.2.1 BellSouth shall offer Dedicated Transport in each of the following ways:

6.2.1.1 As capacity on a shared UNE facility.

6.2.1.2 As a circuit (e.g., DS0, DS1, DS3) dedicated to DPI Teleconnect.

6.2.2 Dedicated Transport may be provided over facilities such as optical fiber, copper twisted pair, and coaxial cable, and shall include transmission equipment such as line terminating equipment, amplifiers, and regenerators.

6.2.3 DPI Teleconnect may obtain a maximum of twelve (12) unbundled dedicated DS3 circuits, or their equivalent, for any single route at the UNE rates set forth in Exhibit A for which dedicated DS3 transport is available as unbundled transport. Additional capacity may be purchased pursuant to the rates, terms and conditions as set forth in the applicable tariff. A route is defined as a transmission path between one of BellSouth's wire centers or switches and another of BellSouth's wire centers or switches. A route between two (2) points may pass through one or more intermediate wire centers or switches. Transmission paths between identical end points are the same "route", irrespective of whether they pass through the same intermediate wire centers or switches, if any.

6.2.4 Any request to re-terminate one end of a circuit will require the issuance of new service and disconnection of the existing service and the applicable charges in Exhibit A shall apply, and the re-terminated circuit shall be considered a new circuit as of the installation date.

6.2.5 If Dedicated Transport is not readily available but can be made available through routine network modifications, as defined by the FCC, DPI Teleconnect may

request BellSouth to perform such routine network modifications. The request may not be used to place fiber. Each request will be handled as a project on an individual case basis. BellSouth will provide a price quote for the request, and upon receipt of payment by DPI Teleconnect, BellSouth shall perform the routine network modifications.

6.2.6 Technical Requirements

6.2.6.1 The entire designated transmission service (e.g., DS0, DS1, DS3) shall be dedicated to DPI Teleconnect designated traffic.

6.2.6.2 For DS1 or DS3 circuits, Dedicated Transport shall at a minimum meet the performance, availability, jitter, and delay requirements specified for Customer Interface to Central Office (CI to CO) connections in the applicable industry standards.

6.2.6.3 BellSouth shall offer the following interface transmission rates for Dedicated Transport:

6.2.6.3.1 DS0 Equivalent;

6.2.6.3.2 DS1;

6.2.6.3.3 DS3; and

6.2.6.3.4 SDH (Synchronous Digital Hierarchy) Standard interface rates are in accordance with International Telecommunications Union (ITU) Recommendation G.707 and Plesiochronous Digital Hierarchy (PDH) rates per ITU Recommendation G.704.

6.2.6.4 BellSouth shall design Dedicated Transport according to its network infrastructure. DPI Teleconnect shall specify the termination points for Dedicated Transport.

6.2.6.5 At a minimum, Dedicated Transport shall meet each of the requirements set forth in the applicable industry technical references.

6.2.6.6 BellSouth Technical References:

6.2.6.6.1 TR-TSY-000191 Alarm Indication Signals Requirements and Objectives, Issue 1, May 1986.

6.2.6.6.2 TR 73501 LightGate®Service Interface and Performance Specifications, Issue D, June 1995.

6.2.6.6.3 TR 73525 MegaLink®Service, MegaLink Channel Service and MegaLink Plus Service Interface and Performance Specifications, Issue C, May 1996.

6.3 Unbundled Channelization (Multiplexing)

6.3.1 Unbundled Channelization (UC) provides the optional multiplexing capability that will allow a DS1 (1.544 Mbps) or DS3 (44.736 Mbps) or STS-1 (51.84 Mbps) UNE or collocation cross connect to be multiplexed or channelized at a BellSouth central office. Channelization can be accomplished through the use of a multiplexer or a digital cross connect system at the discretion of BellSouth. Once UC has been installed, DPI Teleconnect may request channel activation on an as needed basis and BellSouth shall connect the requested facilities via Central Office Channel Interfaces (COCIs). The COCI must be compatible with the lower capacity facility and ordered with the lower capacity facility. This service is available as defined in NECA 4.

6.3.2 BellSouth shall make available the following channelization systems and interfaces:

6.3.2.1 DS1 Channelization System: channelizes a DS1 signal into a maximum of twenty-four (24) DS0s. The following Central Office Channel Interfaces (COCI) are available: Voice Grade, Digital Data and ISDN.

6.3.2.2 DS3 Channelization System: channelizes a DS3 signal into a maximum of twenty-eight (28) DS1s. A DS1 COCI is available with this system.

6.3.2.3 STS-1 Channelization System: channelizes a STS-1 signal into a maximum of twenty-eight (28) DS1s. A DS1 COCI is available with this system.

6.3.2.4 AMI and B8ZS line coding with either Super Frame (SF) and Extended Super Frame (ESF) framing formats will be supported as an optional feature on DS1 facilities.

6.3.3 Technical Requirements

6.3.3.1 In order to assure proper operation with BellSouth provided central office multiplexing functionality, DPI Teleconnect's channelization equipment must adhere strictly to form and protocol standards. DPI Teleconnect must also adhere to such applicable industry standards for the multiplex channel bank, for voice frequency encoding, for various signaling schemes, and for sub rate digital access.

6.3.3.2 TR 73501 LightGate® Service Interface and Performance Specifications, Issue D, June 1995

6.4 **Dark Fiber Transport**

6.4.1 Dark Fiber Transport is strands of optical fiber existing in aerial or underground structure. BellSouth will not provide line terminating elements, regeneration or other electronics necessary for DPI Teleconnect to utilize Dark Fiber Transport.

6.4.2 If Dark Fiber Transport is not readily available but can be made available through routine network modifications, as defined by the FCC, DPI Teleconnect may

request BellSouth to perform such routine network modifications. The request may not be used to place fiber. Each request will be handled as a project on an individual case basis. BellSouth will provide a price quote for the request, and upon receipt of payment by DPI Teleconnect, BellSouth shall perform the routine network modifications.

6.4.3 Requirements

6.4.3.1 BellSouth shall make available Dark Fiber Transport where it exists in BellSouth's network and where, as a result of future building or deployment, it becomes available. Dark Fiber Transport will not be deemed available if (1) it is used by BellSouth for maintenance and repair purposes, (2) it is designated for use pursuant to a firm order placed by another customer, (3) it is restricted for use by all carriers, including BellSouth, because of transmission problems or because it is scheduled for removal due to documented changes to roads and infrastructure, or (4) BellSouth has plans to use the fiber within a two-year planning period. BellSouth is not required to place fibers for Dark Fiber Transport if there are none available.

6.4.3.2 DPI Teleconnect is solely responsible for testing the quality of the Dark Fiber Transport to determine its usability and performance specifications.

6.4.3.3 BellSouth shall use its best efforts to provide to DPI Teleconnect information regarding the location, availability and performance of Dark Fiber Transport within ten (10) business days after receiving a request from DPI Teleconnect. Within such time period, BellSouth shall send written confirmation of availability of the Dark Fiber Transport.

6.4.3.4 If the requested Dark Fiber Transport is available, BellSouth shall use its commercially reasonable efforts to provision the Dark Fiber Transport to DPI Teleconnect within twenty (20) business days after DPI Teleconnect submits a valid, error free LSR. Provisioning includes identification of appropriate connection points (e.g., LGX) to enable DPI Teleconnect to connect DPI Teleconnect provided transmission media (e.g., optical fiber) or equipment to the Dark Fiber Transport.

7 Databases

7.1 Call Related Databases are the databases set forth in this Attachment, other than OSS, that are used in signaling networks for billing and collection, or the transmission, routing or other provision of a telecommunications service. Notwithstanding anything to the contrary herein, BellSouth shall only provide unbundled access to BellSouth Switched Access (SWA) 8XX Toll Free Dialing Ten Digit Screening Service, Line Information Database (LIDB), Signaling, Signaling Link Transport, Signaling Transfer Points, SS7 AIN Access, Service Control Point\Databases, Local Number Portability Databases, SS7 Network

Interconnection, and Calling Name (CNAM) Database Service at the prices set forth herein where BellSouth is required to provide and is providing unbundled access to local circuit switching to DPI Teleconnect.

7.2 To the extent unbundled local circuit switching is converted to market based switching pursuant to Section 4.2.2 of this Attachment, BellSouth may, at its discretion, provide access to BellSouth Switched Access (SWA) 8XX Toll Free Dialing Ten Digit Screening Service, LIDB, Signaling, Signaling Link Transport, Signaling Transfer Points, SS7 AIN Access, Service Control Point\Databases, Local Number Portability Databases, SS7 Network Interconnection, Calling Name (CNAM) at market based rates pursuant to a separate agreement or tariff.

8 BellSouth Switched Access (SWA) 8XX Toll Free Dialing Ten Digit Screening Service

8.1 The BellSouth SWA 8XX Toll Free Dialing Ten Digit Screening Service database (8XX SCP Database) is a SCP that contains customer record information and the functionality to provide call-handling instructions for 8XX calls. The 8XX SCP IN software stores data downloaded from the national SMS/8XX database and provides the routing instructions in response to queries from the SSP or tandem. The BellSouth SWA 8XX Toll Free Dialing Ten Digit Screening Service (8XX TFD Service) utilizes the 8XX SCP Database to provide identification and routing of the 8XX calls, based on the ten digits dialed. At DPI Teleconnect's option, 8XX TFD Service is provided with or without POTS number delivery, dialing number delivery, and other optional complex features as selected by DPI Teleconnect.

8.2 The 8XX SCP Database is designated to receive and respond to queries using the ANSI Specification of Signaling System Seven (SS7) protocol.

9 Line Information Database

9.1 LIDB is a transaction-oriented database accessible through Common Channel Signaling (CCS) networks. For access to LIDB, DPI Teleconnect must purchase appropriate signaling links pursuant to Section 10 of this Attachment. LIDB contains records associated with End User Line Numbers and Special Billing Numbers. LIDB accepts queries from other Network Elements and provides appropriate responses. The query originator need not be the owner of LIDB data. LIDB queries include functions such as screening billed numbers that provides the ability to accept Collect or Third Number Billing calls and validation of Telephone Line Number based non-proprietary calling cards. The interface for the LIDB functionality is the interface between BellSouth's CCS network and other CCS networks. LIDB also interfaces to administrative systems.

9.2 Technical Requirements

9.2.1 BellSouth will offer to DPI Teleconnect any additional capabilities that are developed for LIDB during the life of this Agreement.

9.2.2 BellSouth shall process DPI Teleconnect's customer records in LIDB at least at parity with BellSouth customer records, with respect to other LIDB functions. BellSouth shall indicate to DPI Teleconnect what additional functions (if any) are performed by LIDB in the BellSouth network.

9.2.3 Within two (2) weeks after a request by DPI Teleconnect, BellSouth shall provide DPI Teleconnect with a list of the customer data items, which DPI Teleconnect would have to provide in order to support each required LIDB function. The list shall indicate which data items are essential to LIDB function and which are required only to support certain services. For each data item, the list shall show the data formats, the acceptable values of the data item and the meaning of those values.

9.2.4 BellSouth shall provide LIDB systems for which operating deficiencies that would result in calls being blocked shall not exceed thirty (30) minutes per year.

9.2.5 BellSouth shall provide LIDB systems for which operating deficiencies that would not result in calls being blocked shall not exceed twelve (12) hours per year.

9.2.6 BellSouth shall provide LIDB systems for which the LIDB function shall be in overload no more than twelve (12) hours per year.

9.2.7 All additions, updates and deletions of DPI Teleconnect data to the LIDB shall be solely at the direction of DPI Teleconnect. Such direction from DPI Teleconnect will not be required where the addition, update or deletion is necessary to perform standard fraud control measures (e.g., calling card auto-deactivation).

9.2.8 BellSouth shall provide priority updates to LIDB for DPI Teleconnect data upon DPI Teleconnect's request (e.g., to support fraud detection)**,** via password-protected telephone card, facsimile, or electronic mail within one hour of notice from the established BellSouth contact.

9.2.9 BellSouth shall provide LIDB systems such that no more than 0.01% of DPI Teleconnect customer records will be missing from LIDB, as measured by DPI Teleconnect audits. BellSouth will audit DPI Teleconnect records in LIDB against Data Base Administration System (DBAS) to identify record mismatches and provide this data to a designated DPI Teleconnect contact person to resolve the status of the records and BellSouth will update system appropriately. BellSouth will refer record of mismatches to DPI Teleconnect within one (1) business day of audit. Once reconciled records are received back from DPI Teleconnect, BellSouth will update LIDB the same business day if less than 500 records are received before 1:00PM Central Time. If more than 500 records are received,

BellSouth will contact DPI Teleconnect to negotiate a time frame for the updates, not to exceed three business days.

9.2.10 BellSouth shall perform backup and recovery of all of DPI Teleconnect's data in LIDB including sending to LIDB all changes made since the date of the most recent backup copy, in at least the same time frame BellSouth performs backup and recovery of BellSouth data in LIDB for itself. Currently, BellSouth performs backups of the LIDB for itself on a weekly basis; and when a new software release is scheduled, a backup is performed prior to loading the new release.

9.2.11 BellSouth shall provide DPI Teleconnect with LIDB reports of data which are missing or contain errors, as well as any misrouted errors, within a reasonable time period as negotiated between DPI Teleconnect and BellSouth.

9.2.12 BellSouth shall prevent any access to or use of DPI Teleconnect data in LIDB by BellSouth personnel that are outside of established administrative and fraud control personnel, or by any other Party that is not authorized by DPI Teleconnect in writing.

9.2.13 BellSouth shall provide DPI Teleconnect performance of the LIDB Data Screening function, which allows a LIDB to completely or partially deny specific query originators access to LIDB data owned by specific data owners, for Customer Data that is part of an NPA-NXX or RAO-0/1XX wholly or partially owned by DPI Teleconnect at least at parity with BellSouth Customer Data. BellSouth shall obtain from DPI Teleconnect the screening information associated with LIDB Data Screening of DPI Teleconnect data in accordance with this requirement. BellSouth currently does not have LIDB Data Screening capabilities. When such capability is available, BellSouth shall offer it to DPI Teleconnect under the BFR/NBR process as set forth in Attachment 11.

9.2.14 BellSouth shall accept queries to LIDB associated with DPI Teleconnect customer records and shall return responses in accordance with industry standards.

9.2.15 BellSouth shall provide mean processing time at the LIDB within 0.50 seconds under normal conditions as defined in industry standards.

9.2.16 BellSouth shall provide processing time at the LIDB within 1 second for 99% of all messages under normal conditions as defined in industry standards.

9.3 <u>Interface Requirements</u>

9.3.1 BellSouth shall offer LIDB in accordance with the requirements of this subsection.

9.3.2 The interface to LIDB shall be in accordance with the technical references contained within.

9.3.3 The CCS interface to LIDB shall be the standard interface described herein.

9.3.4 The LIDB Data Base interpretation of the ANSI-TCAP messages shall comply with the technical reference herein. Global Title Translation (GTT) shall be maintained in the signaling network in order to support signaling network routing to the LIDB.

9.3.5 The application of the LIDB rates contained in Exhibit A to this Attachment will be based on a Percent CLEC LIDB Usage (PCLU) factor. DPI Teleconnect shall provide BellSouth a PCLU. The PCLU will be applied to determine the percentage of total LIDB usage to be billed to the other Party at local rates. DPI Teleconnect shall update its PCLU on the first of January, April, July and October and shall send it to BellSouth to be received no later than thirty (30) calendar days after the first of each such month based on local usage for the past three months ending the last day of December, March, June and September, respectively. Requirements associated with PCLU calculation and reporting shall be as set forth in BellSouth's Jurisdictional Factors Reporting Guide, as it is amended from time to time.

10 <u>Signaling</u>

10.1 BellSouth shall offer access to signaling and access to BellSouth's signaling databases subject to compatibility testing and at the rates set forth in this Attachment. BellSouth may provide mediated access to BellSouth signaling systems and databases. Available signaling elements include signaling links, signal transfer points and service control points. Signaling functionality will be available with both A-link and B-link connectivity.

10.2 **<u>Signaling Link Transport</u>**

10.2.1 Signaling Link Transport is a set of two (2) or four (4) dedicated 56 kbps transmission paths between DPI Teleconnect designated Signaling Points of Interconnection that provide appropriate physical diversity.

10.2.2 <u>Technical Requirements</u>

10.2.3 Signaling Link Transport shall consist of full duplex mode 56 kbps transmission paths and shall perform in the following two ways:

10.2.3.1 As an "A-link" Signaling Link Transport is a connection between a switch or SCP and a home Signaling Transfer Point switch pair; and

10.2.3.2 As a "B-link" Signaling Link Transport is a connection between two Signaling Transfer Point switch pairs in different company networks (e.g., between two Signaling Transfer Point switch pairs for two CLECs).

10.2.4 Signaling Link Transport shall consist of two (2) or more signaling link layers as follows:

10.2.4.1 An A-link layer shall consist of two (2) links.

10.2.4.2 A B-link layer shall consist of four (4) links.

10.2.4.3 A signaling link layer shall satisfy interoffice and intraoffice diversity of facilities and equipment, such that:

10.2.4.4 No single failure of facilities or equipment causes the failure of both links in an A-link layer (i.e., the links should be provided on a minimum of two (2) separate physical paths end-to-end); and

10.2.4.5 No two (2) concurrent failures of facilities or equipment shall cause the failure of all four (4) links in a B-link layer (i.e., the links should be provided on a minimum of three separate physical paths end-to-end).

10.2.5 Interface Requirements

10.2.5.1 There shall be a DS1 (1.544 Mbps) interface at DPI Teleconnect's designated SPOIs. Each 56 kbps transmission path shall appear as a DS0 channel within the DS1 interface.

10.3 **Signaling Transfer Points**

10.3.1 A STP is a signaling network function that includes all of the capabilities provided by the signaling transfer point switches (STPS) and their associated signaling links that enables the exchange of SS7 messages among and between switching elements, database elements and signaling transfer point switches.

10.3.2 Technical Requirements

10.3.2.1 STPs shall provide access to BellSouth Local Switching or Tandem Switching and to BellSouth Service Control Points/Databases connected to BellSouth SS7 network. STPs also provide access to third-party local or tandem switching and third-party-provided STPs.

10.3.2.2 The connectivity provided by STPs shall fully support the functions of all other Network Elements connected to the BellSouth SS7 network. This includes the use of the BellSouth SS7 network to convey messages that neither originate nor terminate at a signaling end point directly connected to the BellSouth SS7 network (i.e., transit messages). When the BellSouth SS7 network is used to convey transit messages, there shall be no alteration of the Integrated Services Digital Network User Part or Transaction Capabilities Application Part (TCAP) user data that constitutes the content of the message.

10.3.2.3 If a BellSouth tandem switch routes traffic, based on dialed or translated digits, on SS7 trunks between a DPI Teleconnect local switch and third party local switch, the BellSouth SS7 network shall convey the TCAP messages that are necessary to provide Call Management features (Automatic Callback, Automatic Recall, and Screening List Editing) between DPI Teleconnect local STPs and the STPs that provide connectivity with the third party local switch, even if the third party local switch is not directly connected to BellSouth STPs.

10.3.2.4 STPs shall provide all functions of the SCCP necessary for Class 0 (basic connectionless) service as defined in Telcordia ANSI Interconnection Requirements. This includes GTT and SCCP Management procedures, as specified in ANSI T1.112.4. Where the destination signaling point is a DPI Teleconnect or third party local or tandem switching system directly connected to BellSouth SS7 network, BellSouth shall perform final GTT of messages to the destination and SCCP Subsystem Management of the destination. In all other cases, BellSouth shall perform intermediate GTT of messages to a gateway pair of STPs in an SS7 network connected with BellSouth SS7 network and shall not perform SCCP Subsystem Management of the destination. If BellSouth performs final GTT to a DPI Teleconnect database, then DPI Teleconnect agrees to provide BellSouth with the Destination Point Code for DPI Teleconnect database.

10.3.2.5 STPs shall provide all functions of the Operations, Maintenance and Administration Part (OMAP) as specified in applicable industry standard technical references, which may include, where available in BellSouth's network, MTP Routing Verification Test (MRVT) and SCCP Routing Verification Test (SRVT).

10.3.2.6 Where the destination signaling point is a BellSouth local or tandem switching system or database, or is a DPI Teleconnect or third party local or tandem switching system directly connected to the BellSouth SS7 network, STPs shall perform MRVT and SRVT to the destination signaling point. In all other cases, STPs shall perform MRVT and SRVT to a gateway pair of STPs in an SS7 network connected with the BellSouth SS7 network. This requirement may be superseded by the specifications for Internetwork MRVT and SRVT when these become approved ANSI standards and available capabilities of BellSouth STPs.

10.4 **SS7**

10.4.1 When technically feasible and upon request by DPI Teleconnect, SS7 AIN Access shall be made available in association with switching. SS7 AIN Access is the provisioning of AIN 0.1 triggers in an equipped BellSouth local switch and interconnection of the BellSouth SS7 network with DPI Teleconnect's SS7 network to exchange TCAP queries and responses with a DPI Teleconnect SCP.

10.4.2 SS7 AIN Access shall provide DPI Teleconnect SCP access to an equipped BellSouth local switch via interconnection of BellSouth's SS7 and DPI Teleconnect SS7 Networks. BellSouth shall offer SS7 AIN Access through its

STPs. If BellSouth requires a mediation device on any part of its network specific to this form of access, BellSouth must route its messages in the same manner. The interconnection arrangement shall result in the BellSouth local switch recognizing the DPI Teleconnect SCP as at least at parity with BellSouth's SCPs in terms of interfaces, performance and capabilities.

10.4.3 Interface Requirements

10.4.3.1 BellSouth shall provide the following STP options to connect DPI Teleconnect or DPI Teleconnect-designated local switching systems to the BellSouth SS7 network:

10.4.3.1.1 An A-link interface from DPI Teleconnect local switching systems; and,

10.4.3.1.2 A B-link interface from DPI Teleconnect local STPs.

10.4.3.2 Each type of interface shall be provided by one or more layers of signaling links.

10.4.3.3 The Signaling Point of Interconnection for each link shall be located at a cross-connect element in the CO where the BellSouth STP is located. There shall be a DS1 or higher rate transport interface at each of the SPOIs. Each signaling link shall appear as a DS0 channel within the DS1 or higher rate interface.

10.4.3.4 BellSouth shall provide intraoffice diversity between the SPOI and BellSouth STPs so that no single failure of intraoffice facilities or equipment shall cause the failure of both B-links in a layer connecting to a BellSouth STP.

10.4.3.5 STPs shall provide all functions of the MTP as defined in the applicable industry standard technical references.

10.4.4 Message Screening

10.4.4.1 BellSouth shall set message screening parameters so as to accept valid messages from DPI Teleconnect local or tandem switching systems destined to any signaling point within BellSouth's SS7 network where the DPI Teleconnect switching system has a valid signaling relationship.

10.4.4.2 BellSouth shall set message screening parameters so as to pass valid messages from DPI Teleconnect local or tandem switching systems destined to any signaling point or network accessed through BellSouth's SS7 network where the DPI Teleconnect switching system has a valid signaling relationship.

10.4.4.3 BellSouth shall set message screening parameters so as to accept and pass/send valid messages destined to and from DPI Teleconnect from any signaling point or network interconnected through BellSouth's SS7 network where the DPI Teleconnect SCP has a valid signaling relationship.

10.5 **Service Control Points (SCP)/Databases**

10.5.1 Call Related Databases provide the storage of, access to, and manipulation of information required to offer a particular service and/or capability. BellSouth shall provide access to the following Databases: Local Number Portability, LIDB, Toll Free Number Database, Automatic Location Identification/Data Management System, and Calling Name Database. BellSouth also provides access to Service Creation Environment and Service Management System (SCE/SMS) application databases and Directory Assistance.

10.5.2 A SCP is deployed in a SS7 network that executes service application logic in response to SS7 queries sent to it by a switching system also connected to the SS7 network. Service Management Systems provide operational interfaces to allow for provisioning, administration and maintenance of subscriber data and service application data stored in SCPs.

10.5.3 Technical Requirements for SCPs/Databases

10.5.3.1 BellSouth shall provide physical access to SCPs through the SS7 network and protocols with TCAP as the application layer protocol.

10.5.3.2 BellSouth shall provide physical interconnection to databases via industry standard interfaces and protocols (e.g. SS7, ISDN and X.25).

10.5.3.3 The reliability of interconnection options shall be consistent with requirements for diversity and survivability.

10.6 **Local Number Portability Database**

10.6.1 The Permanent Number Portability (PNP) database supplies routing numbers for calls involving numbers that have been ported from one local service provider to another. BellSouth agrees to provide access to the PNP database at rates, terms and conditions as set forth by BellSouth and in accordance with an effective FCC or Commission directive.

10.7 **SS7 Network Interconnection**

10.7.1 SS7 Network Interconnection is the interconnection of DPI Teleconnect local signaling transfer point switches or DPI Teleconnect local or tandem switching systems with BellSouth signaling transfer point switches. This interconnection provides connectivity that enables the exchange of SS7 messages among BellSouth switching systems and databases, DPI Teleconnect local or tandem switching systems, and other third-party switching systems directly connected to the BellSouth SS7 network.

10.7.2 The connectivity provided by SS7 Network Interconnection shall fully support the functions of BellSouth switching systems and databases and DPI Teleconnect or other third-party switching systems with A-link access to the BellSouth SS7 network.

10.7.3 If traffic is routed based on dialed or translated digits between a DPI Teleconnect local switching system and a BellSouth or other third-party local switching system, either directly or via a BellSouth tandem switching system, then it is a requirement that the BellSouth SS7 network convey via SS7 Network Interconnection the TCAP messages that are necessary to provide Call Management services (Automatic Callback, Automatic Recall, and Screening List Editing) between the DPI Teleconnect local signaling transfer point switches and BellSouth or other third-party local switch.

10.7.4 SS7 Network Interconnection shall provide:

10.7.4.1 Signaling Data Link functions, as specified in ANSI T1.111.2;

10.7.4.2 Signaling Link functions, as specified in ANSI T1.111.3; and

10.7.4.3 Signaling Network Management functions, as specified in ANSI T1.111.4.

10.7.5 SS7 Network Interconnection shall provide all functions of the SCCP necessary for Class 0 (basic connectionless) service as specified in ANSI T1.112. This includes GTT and SCCP Management procedures as specified in ANSI T1.112.4. Where the destination signaling point is a BellSouth switching system or DB, or is another third-party local or tandem switching system directly connected to the BellSouth SS7 network, SS7 Network Interconnection shall include final GTT of messages to the destination and SCCP Subsystem Management of the destination. Where the destination signaling point is a DPI Teleconnect local or tandem switching system, SS7 Network Interconnection shall include intermediate GTT of messages to a gateway pair of DPI Teleconnect local STPs and shall not include SCCP Subsystem Management of the destination.

10.7.6 SS7 Network Interconnection shall provide all functions of the Integrated Services Digital Network User Part as specified in ANSI T1.113.

10.7.7 SS7 Network Interconnection shall provide all functions of the TCAP as specified in ANSI T1.114.

10.7.8 If Internetwork MRVT and SRVT become approved ANSI standards and available capabilities of BellSouth STPs, SS7 Network Interconnection may provide these functions of the OMAP.

10.7.9 <u>Interface Requirements</u>

10.7.9.1 The following SS7 Network Interconnection interface options are available to connect DPI Teleconnect or DPI Teleconnect-designated local or tandem switching systems or signaling transfer point switches to the BellSouth SS7 network:

10.7.9.1.1 A-link interface from DPI Teleconnect local or tandem switching systems; and

10.7.9.1.2 B-link interface from DPI Teleconnect STPs.

10.7.9.2 The Signaling Point of Interconnection for each link shall be located at a cross-connect element in the central office where the BellSouth STP is located. There shall be a DS1 or higher rate transport interface at each of the Signaling Points of interconnection. Each signaling link shall appear as a DS0 channel within the DS1 or higher rate interface.

10.7.9.3 BellSouth shall provide intraoffice diversity between the Signaling Points of Interconnection and the BellSouth STP, so that no single failure of intraoffice facilities or equipment shall cause the failure of both B-links in a layer connecting to a BellSouth STP.

10.7.9.4 The protocol interface requirements for SS7 Network Interconnection include the MTP, ISDNUP, SCCP, and TCAP. These protocol interfaces shall conform to the applicable industry standard technical references.

10.7.9.5 BellSouth shall set message screening parameters to accept messages from DPI Teleconnect local or tandem switching systems destined to any signaling point in the BellSouth SS7 network with which the DPI Teleconnect switching system has a valid signaling relationship.

11 Automatic Location Identification/Data Management System (ALI/DMS)

11.1 The ALI/DMS Database contains End User information (including name, address, telephone information, and sometimes special information from the local service provider or End User) used to determine to which PSAP to route the call. The ALI/DMS database is used to provide enhanced routing flexibility for E911. DPI Teleconnect will be required to provide BellSouth daily updates to E911 database. DPI Teleconnect shall also be responsible for providing BellSouth with complete and accurate data for submission to the 911/E911 database for the purpose of providing 911/E911 service to its End Users.

11.2 Technical Requirements

11.2.1 BellSouth shall provide DPI Teleconnect the capability of providing updates to the ALI/DMS database. BellSouth shall provide error reports from the ALI/DMS database to DPI Teleconnect after DPI Teleconnect provides End User information for input into the ALI/DMS database.

11.2.2 DPI Teleconnect shall conform to the National Emergency Number Association (NENA) recommended standards for LNP and updating the ALI/DMS database.

12 Calling Name Database Service

12.1 CNAM is the ability to associate a name with the calling party number, allowing the End User (to which a call is being terminated) to view the calling party's name before the call is answered. The calling party's information is accessed by queries launched to the CNAM database. This service also provides DPI Teleconnect the opportunity to load and store its subscriber names in the BellSouth CNAM SCPs.

12.2 DPI Teleconnect shall submit to BellSouth a notice of its intent to access and utilize BellSouth CNAM Database Services. Said notice shall be in writing no less than sixty (60) calendar days prior to DPI Teleconnect's access to BellSouth's CNAM Database Services and shall be addressed to DPI Teleconnect's Local Contract Manager.

12.3 BellSouth's provision of CNAM Database Services to DPI Teleconnect requires interconnection from DPI Teleconnect to BellSouth CNAM SCPs. Such interconnections shall be established pursuant to Attachment 3 of this Agreement.

12.4 In order to formulate a CNAM query to be sent to the BellSouth CNAM SCP, DPI Teleconnect shall provide its own CNAM SSP. DPI Teleconnect's CNAM SSPs must be compliant with TR-NWT-001188, "CLASS Calling Name Delivery Generic Requirements".

12.5 If DPI Teleconnect elects to access the BellSouth CNAM SCP via a third party CCS7 transport provider, the third party CCS7 provider shall interconnect with the BellSouth CCS7 network according to BellSouth's Common Channel Signaling Interconnection Guidelines and Telcordia's CCS Network Interface Specification document, TR-TSV-000905. In addition, the third party provider shall establish CCS7 interconnection at the BellSouth Local Signal Transfer Points (LSTPs) serving the BellSouth CNAM SCPs that DPI Teleconnect desires to query.

12.6 If DPI Teleconnect queries the BellSouth CNAM SCP via a third party national SS7 transport provider, the third party SS7 provider shall interconnect with the BellSouth CCS7 network according to BellSouth's Common Channel Signaling Interconnection Guidelines and Telcordia's CCS Network Interface Specification document, TR-TSV-000905. In addition, the third party provider shall establish SS7 interconnection at one or more of the BellSouth Gateway STPs. The payment of all costs associated with the transport of SS7 signals via a third party will be established by mutual agreement of the Parties and this Agreement shall be amended in accordance with modification of the General Terms and Conditions incorporated herein by this reference.

12.7 The mechanism to be used by DPI Teleconnect for initial CNAM record load and/or updates shall be determined by mutual agreement. The initial load and all updates shall be provided by DPI Teleconnect in the BellSouth specified format and shall contain records for every working telephone number that can originate phone calls. It is the responsibility of DPI Teleconnect to provide accurate information to BellSouth on a current basis.

12.8 Updates to the SMS shall occur no less than once a week, reflect service order activity affecting either name or telephone number, and involve only record additions, deletions or changes.

12.9 DPI Teleconnect CNAM records provided for storage in the BellSouth CNAM SCP shall be available, on a SCP query basis only, to all Parties querying the BellSouth CNAM SCP. Further, CNAM service shall be provided by each Party consistent with state and/or federal regulation.

13 Service Creation Environment and Service Management System (SCE/SMS) Advanced Intelligent Network Access

13.1 BellSouth's SCE/SMS AIN Access shall provide DPI Teleconnect the capability to create service applications in a BellSouth SCE and deploy those applications in a BellSouth SMS to a BellSouth SCP.

13.2 BellSouth's SCE/SMS AIN Access shall provide access to SCE hardware, software, testing and technical support (e.g., help desk, system administrator) resources available to DPI Teleconnect. Training, documentation, and technical support will address use of SCE and SMS access and administrative functions but will not include support for the creation of a specific service application.

13.3 BellSouth SCP shall partition and protect DPI Teleconnect service logic and data from unauthorized access.

13.4 When DPI Teleconnect selects SCE/SMS AIN Access, BellSouth shall provide training, documentation, and technical support to enable DPI Teleconnect to use BellSouth's SCE/SMS AIN Access to create and administer applications.

13.5 DPI Teleconnect access will be provided via remote data connection (e.g., dial-in, ISDN).

13.6 BellSouth shall allow DPI Teleconnect to download data forms and/or tables to BellSouth SCP via BellSouth SMS without intervention from BellSouth.

14 Operational Support Systems

14.1 BellSouth has developed and made available electronic interfaces by which DPI Teleconnect may submit LSRs electronically.

14.2 LSRs submitted by means of one of these electronic interfaces will incur an OSS electronic ordering charge. An individual LSR will be identified for billing purposes by its Purchase Order Number (PON). LSRs submitted by means other than one of these interactive interfaces (mail, fax, courier, etc.) will incur a manual order charge. All OSS charges are specified in Exhibit A of this Attachment.

14.3 Denial/Restoral OSS Charge

14.3.1 In the event DPI Teleconnect provides a list of customers to be denied and restored, rather than an LSR, each location on the list will require a separate PON and therefore will be billed as one LSR per location.

14.4 Cancellation OSS Charge

14.4.1 DPI Teleconnect will incur an OSS charge for an accepted LSR that is later canceled.

14.5 Supplements or clarifications to a previously billed LSR will not incur another OSS charge.

14.6 Network Elements and Other Services Manual Additive

14.6.1 The Commissions in some states have ordered per element manual additive nonrecurring charges (NRC) for Network Elements and Other Services ordered by means other than one of the interactive interfaces. These ordered Network Elements and Other Services manual additive NRCs will apply in these states, rather than the charge per LSR. The per element charges are listed in Exhibit A.

UNBUNDLED NETWORK ELEMENTS - Alabama														Attachment: 2		Exhibit: A	
CATEGORY		RATE ELEMENTS	Interim	Zone	BCS	USOC	RATES ($)					Svc Order Submitted Elec per LSR	Svc Order Submitted Manually per LSR	Incremental Charge - Manual Svc Order vs. Electronic-1st	Incremental Charge - Manual Svc Order vs. Electronic-Add'l	Incremental Charge - Manual Svc Order vs. Electronic-Disc 1st	Incremental Charge - Manual Svc Order vs. Electronic-Disc Add'l
							Rec	Nonrecurring		Nonrecurring Disconnect		OSS Rates ($)					
								First	Add'l	First	Add'l	SOMEC	SOMAN	SOMAN	SOMAN	SOMAN	SOMAN
	The "Zone" shown in the sections for stand-alone loops or loops as part of a combination refers to Geographically Deaveraged UNE Zones. To view Geographically Deaveraged UNE Zone Designations by Central Office, refer to internet Website: http://www.interconnection.bellsouth.com/become_a_clec/html/interconnection.htm																
OPERATIONAL SUPPORT SYSTEMS (OSS) - "REGIONAL RATES"																	
	NOTE: (1) CLEC should contact its contract negotiator if it prefers the "state specific" OSS charges as ordered by the State Commissions. The OSS charges currently contained in this rate exhibit are the BellSouth "regional" service ordering charges. CLEC may elect either the state specific Commission ordered rates for the service ordering charges, or CLEC may elect the regional service ordering charge, however, CLEC can not obtain a mixture of the two regardless if CLEC has a interconnection contract established in each of the 9 states.																
	NOTE: (2) Any element that can be ordered electronically will be billed according to the SOMEC rate listed in this category. Please refer to BellSouth's Local Ordering Handbook (LOH) to determine if a product can be ordered electronically. For those elements that cannot be ordered electronically at present per the LOH, the listed SOMEC rate in this category reflects the charge that would be billed to a CLEC once electronic ordering capabilities come on-line for that element. Otherwise, the manual ordering charge, SOMAN, will be applied to a CLECs bill when it submits an LSR to BellSouth.																
		OSS - Electronic Service Order Charge, Per Local Service Request (LSR) - UNE Only				SOMEC		3.50	0.00	3.50	0.00						
		OSS - Manual Service Order Charge, Per Local Service Request (LSR) - UNE Only				SOMAN		15.66	0.00	1.97	0.00						
UNE SERVICE DATE ADVANCEMENT CHARGE																	
	NOTE: The Expedite charge will be maintained commensurate with BellSouth's FCC No.1 Tariff, Section 5 as applicable.																
		UNE Expedite Charge per Circuit or Line Assignable USOC, per Day			UAL, UEANL, UCL, UEF, UDF, UEQ, UDL, UENTW, UDN, UEA, UHL, ULC, USL, U1T12, U1T48, U1TD1, U1TD3, U1TDX, U1TO3, U1TS1, U1TVX, UC1BC, UC1BL, UC1CC, UC1CL, UC1DC, UC1DL, UC1EC, UC1EL, UC1FC, UC1FL, UC1GC, UC1GL, UC1HC, UC1HL, UDL12, UDL48, UDLO3, UDLSX, UE3, ULD12, ULD48, ULDD1, ULDD3, ULDDX, ULDO3, ULDS1, ULDVX, UNC1X, UNC3X, UNCDX, UNCNX, UNCSX, UNCVX, UNLD1, UNLD3, UXTD1, UXTD3, UXTS1, U1TUC, U1TUD, U1TUB, U1TUA	SDASP		200.00									
UNBUNDLED EXCHANGE ACCESS LOOP																	
	2-WIRE ANALOG VOICE GRADE LOOP																
		2-Wire Analog Voice Grade Loop - Service Level 1- Zone 1		1	UEANL	UEAL2	12.58	37.81	17.56	23.49	5.30						
		2-Wire Analog Voice Grade Loop - Service Level 1- Zone 2		2	UEANL	UEAL2	21.05	37.81	17.56	23.49	5.30						
		2-Wire Analog Voice Grade Loop - Service Level 1- Zone 3		3	UEANL	UEAL2	34.34	37.81	17.56	23.49	5.30						
		2-Wire Analog Voice Grade Loop - Service Level 1- Zone 1		1	UEANL	UEASL	12.58	37.81	17.56	23.49	5.30						
		2-Wire Analog Voice Grade Loop - Service Level 1- Zone 2		2	UEANL	UEASL	21.05	37.81	17.56	23.49	5.30						
		2-Wire Analog Voice Grade Loop - Service Level 1- Zone 3		3	UEANL	UEASL	34.34	37.81	17.56	23.49	5.30						
		Unbundled Miscellaneous Rate Element, Tag Loop at End User Premise			UEANL	URETL		8.33	0.83								
		Loop Testing - Basic 1st Half Hour			UEANL	URET1		34.16	34.16								
		Loop Testing - Basic Additional Half Hour			UEANL	URETA		19.85	19.85								

UNBUNDLED NETWORK ELEMENTS - Alabama														Attachment: 2		Exhibit: A	
CATEGORY		RATE ELEMENTS	Interim	Zone	BCS	USOC	RATES ($)					Svc Order Submitted Elec per LSR	Svc Order Submitted Manually per LSR	Incremental Charge - Manual Svc Order vs. Electronic-1st	Incremental Charge - Manual Svc Order vs. Electronic-Add'l	Incremental Charge - Manual Svc Order vs. Electronic-Disc 1st	Incremental Charge - Manual Svc Order vs. Electronic-Disc Add'l
							Rec	Nonrecurring		Nonrecurring Disconnect		OSS Rates ($)					
								First	Add'l	First	Add'l	SOMEC	SOMAN	SOMAN	SOMAN	SOMAN	SOMAN
		CLEC to CLEC Conversion Charge Without Outside Dispatch (UVL-SL1)			UEANL	UREWO		15.78	8.94								
		Unbundled Voice Loop, Non-Design Voice Loop, billing for BST providing make-up (Engineering Information - E.I.)			UEANL	UEANM		13.44									
		Manual Order Coordination for UVL-SL1s (per loop)			UEANL	UEAMC		8.15	8.15								
		Order Coordination for Specified Conversion Time for UVL-SL1 (per LSR)			UEANL	OCOSL		18.09									
	2-WIRE Unbundled COPPER LOOP																
		2-Wire Unbundled Copper Loop - Non-Designed Zone 1	I	1	UEQ	UEQ2X	11.20	34.14	15.10	21.25	4.15						
		2 Wire Unbundled Copper Loop - Non-Designed - Zone 2	I	2	UEQ	UEQ2X	13.27	34.14	15.10	21.25	4.15						
		2 Wire Unbundled Copper Loop - Non-Designed - Zone 3	I	3	UEQ	UEQ2X	15.07	34.14	15.10	21.25	4.15						
		Unbundled Miscellaneous Rate Element, Tag Loop at End User Premise			UEQ	URETL		8.33	0.83								
		Manual Order Coordination 2 Wire Unbundled Copper Loop - Non-Designed (per loop)			UEQ	USBMC		8.15									
		Unbundled Copper Loop, Non-Design Copper Loop, billing for BST providing make-up (Engineering Information - E.I.)			UEQ	UEQMU		13.44									
		Loop Testing - Basic 1st Half Hour			UEQ	URET1		34.16	34.16								
		Loop Testing - Basic Additional Half Hour			UEQ	URETA		19.85	19.85								
		CLEC to CLEC Conversion Charge Without Outside Dispatch (UCL-ND)			UEQ	UREWO		14.27	7.43								
UNBUNDLED EXCHANGE ACCESS LOOP																	
	2-WIRE ANALOG VOICE GRADE LOOP																
		2 Wire Analog Voice Grade Loop-Service Level 1-Line Splitting-Zone 1		1	UEPSR UEPSB	UEALS	12.58	37.81	17.56	23.49	5.30						
		2 Wire Analog Voice Grade Loop-Service Level 1-Line Splitting-Zone 1		1	UEPSR UEPSB	UEABS	12.58	37.81	17.56	23.49	5.30						
		2 Wire Analog Voice Grade Loop- Service Level 1-Line Splitting-Zone 2		2	UEPSR UEPSB	UEALS	21.05	37.81	17.56	23.49	5.30						
		2 Wire Analog Voice Grade Loop- Service Level 1-Line Splitting-Zone 2		2	UEPSR UEPSB	UEABS	21.05	37.81	17.56	23.49	5.30						
		2 Wire Analog Voice Grade Loop-Service Level 1-Line Splitting-Zone 3		3	UEPSR UEPSB	UEALS	34.34	37.81	17.56	23.49	5.30						
		2 Wire Analog Voice Grade Loop-Service Level 1-Line Splitting-Zone 3		3	UEPSR UEPSB	UEABS	34.34	37.81	17.56	23.49	5.30						
UNBUNDLED EXCHANGE ACCESS LOOP																	
	2-WIRE ANALOG VOICE GRADE LOOP																
		2-Wire Analog Voice Grade Loop - Service Level 2 w/Loop or Ground Start Signaling - Zone 1		1	UEA	UEAL2	14.38	88.00	55.00	47.24	7.44						
		2-Wire Analog Voice Grade Loop - Service Level 2 w/Loop or Ground Start Signaling - Zone 2		2	UEA	UEAL2	22.85	88.00	55.00	47.24	7.44						
		2-Wire Analog Voice Grade Loop - Service Level 2 w/Loop or Ground Start Signaling - Zone 3		3	UEA	UEAL2	36.14	88.00	55.00	47.24	7.44						
		Order Coordination for Specified Conversion Time (per LSR)			UEA	OCOSL		18.09									
		2-Wire Analog Voice Grade Loop - Service Level 2 w/Reverse Battery Signaling - Zone 1		1	UEA	UEAR2	14.38	88.00	55.00	47.24	7.44						
		2-Wire Analog Voice Grade Loop - Service Level 2 w/Reverse Battery Signaling - Zone 2		2	UEA	UEAR2	22.85	88.00	55.00	47.24	7.44						
		2-Wire Analog Voice Grade Loop - Service Level 2 w/Reverse Battery Signaling - Zone 3		3	UEA	UEAR2	36.14	88.00	55.00	47.24	7.44						
		Order Coordination for Specified Conversion Time (per LSR)			UEA	OCOSL		18.09									
		CLEC to CLEC Conversion Charge without outside dispatch			UEA	UREWO		87.72	36.36								
		Loop Tagging - Service Level 2 (SL2)			UEA	URETL		11.21	1.10								
	4-WIRE ANALOG VOICE GRADE LOOP																
		4-Wire Analog Voice Grade Loop - Zone 1		1	UEA	UEAL4	25.34	131.97	94.51	59.14	14.50						
		4-Wire Analog Voice Grade Loop - Zone 2		2	UEA	UEAL4	38.58	131.97	94.51	59.14	14.50						
		4-Wire Analog Voice Grade Loop - Zone 3		3	UEA	UEAL4	60.02	131.97	94.51	59.14	14.50						
		Order Coordination for Specified Conversion Time (per LSR)			UEA	OCOSL		18.09									
		CLEC to CLEC Conversion Charge without outside dispatch			UEA	UREWO		87.72	36.36								

UNBUNDLED NETWORK ELEMENTS - Alabama														Attachment: 2		Exhibit: A	
CATEGORY	RATE ELEMENTS	Interim	Zone	BCS	USOC	RATES ($)					Svc Order Submitted Elec per LSR	Svc Order Submitted Manually per LSR	Incremental Charge - Manual Svc Order vs. Electronic-1st	Incremental Charge - Manual Svc Order vs. Electronic-Add'l	Incremental Charge - Manual Svc Order vs. Electronic-Disc 1st	Incremental Charge - Manual Svc Order vs. Electronic-Disc Add'l
						Rec	Nonrecurring		Nonrecurring Disconnect		OSS Rates ($)					
							First	Add'l	First	Add'l	SOMEC	SOMAN	SOMAN	SOMAN	SOMAN	SOMAN
2-WIRE ISDN DIGITAL GRADE LOOP																
	2-Wire ISDN Digital Grade Loop - Zone 1		1	UDN	U1L2X	21.88	117.24	79.77	52.88	10.54						
	2-Wire ISDN Digital Grade Loop - Zone 2		2	UDN	U1L2X	32.85	117.24	79.77	52.88	10.54						
	2-Wire ISDN Digital Grade Loop - Zone 3		3	UDN	U1L2X	48.55	117.24	79.77	52.88	10.54						
	Order Coordination For Specified Conversion Time (per LSR)			UDN	OCOSL		18.09									
	CLEC to CLEC Conversion Charge without outside dispatch			UDN	UREWO		91.63	44.16								
2-WIRE ASYMMETRICAL DIGITAL SUBSCRIBER LINE (ADSL) COMPATIBLE LOOP																
	2 Wire Unbundled ADSL Loop including manual service inquiry & facility reservation - Zone 1		1	UAL	UAL2X	11.01	110.00	68.00	47.24	7.44						
	2 Wire Unbundled ADSL Loop including manual service inquiry & facility reservation - Zone 2		2	UAL	UAL2X	12.73	110.00	68.00	47.24	7.44						
	2 Wire Unbundled ADSL Loop including manual service inquiry & facility reservation - Zone 3		3	UAL	UAL2X	14.30	110.00	68.00	47.24	7.44						
	Order Coordination for Specified Conversion Time (per LSR)			UAL	OCOSL		18.09									
	2 Wire Unbundled ADSL Loop without manual service inquiry & facility reservaton - Zone 1		1	UAL	UAL2W	11.01	90.00	57.00	47.24	7.44						
	2 Wire Unbundled ADSL Loop without manual service inquiry & facility reservaton - Zone 2		2	UAL	UAL2W	12.73	90.00	57.00	47.24	7.44						
	2 Wire Unbundled ADSL Loop without manual service inquiry & facility reservaton - Zone 3		3	UAL	UAL2W	14.30	90.00	57.00	47.24	7.44						
	Order Coordination for Specified Conversion Time (per LSR)			UAL	OCOSL		18.09									
	CLEC to CLEC Conversion Charge without outside dispatch			UAL	UREWO		86.20	40.40								
2-WIRE HIGH BIT RATE DIGITAL SUBSCRIBER LINE (HDSL) COMPATIBLE LOOP																
	2 Wire Unbundled HDSL Loop including manual service inquiry & facility reservation - Zone 1		1	UHL	UHL2X	8.74	110.00	68.00	47.24	7.44						
	2 Wire Unbundled HDSL Loop including manual service inquiry & facility reservation - Zone 2		2	UHL	UHL2X	10.17	110.00	68.00	47.24	7.44						
	2 Wire Unbundled HDSL Loop including manual service inquiry & facility reservation - Zone 3		3	UHL	UHL2X	11.44	110.00	68.00	47.24	7.44						
	Order Coordination for Specified Conversion Time (per LSR)			UHL	OCOSL		18.09									
	2 Wire Unbundled HDSL Loop without manual service inquiry and facility reservation - Zone 1		1	UHL	UHL2W	8.74	90.00	57.00	47.24	7.44						
	2 Wire Unbundled HDSL Loop without manual service inquiry and facility reservation - Zone 2		2	UHL	UHL2W	10.17	90.00	57.00	47.24	7.44						
	2 Wire Unbundled HDSL Loop without manual service inquiry and facility reservation - Zone 3		3	UHL	UHL2W	11.44	90.00	57.00	47.24	7.44						
	Order Coordination for Specified Conversion Time (per LSR)			UHL	OCOSL		18.09									
	CLEC to CLEC Conversion Charge without outside dispatch			UHL	UREWO		86.14	40.40								
4-WIRE HIGH BIT RATE DIGITAL SUBSCRIBER LINE (HDSL) COMPATIBLE LOOP																
	4 Wire Unbundled HDSL Loop including manual service inquiry and facility reservation - Zone 1		1	UHL	UHL4X	13.95	148.36	68.00	51.70	9.73						
	4-Wire Unbundled HDSL Loop including manual service inquiry and facility reservation - Zone 2		2	UHL	UHL4X	15.56	148.36	68.00	51.70	9.73						
	4-Wire Unbundled HDSL Loop including manual service inquiry and facility reservation - Zone 3		3	UHL	UHL4X	15.25	148.36	68.00	51.70	9.73						
	Order Coordination for Specified Conversion Time (per LSR)			UHL	OCOSL		18.09									
	4-Wire Unbundled HDSL Loop without manual service inquiry and facility reservation - Zone 1		1	UHL	UHL4W	13.95	94.00	57.00	51.70	9.73						
	4-Wire Unbundled HDSL Loop without manual service inquiry and facility reservation - Zone 2		2	UHL	UHL4W	15.56	94.00	57.00	51.70	9.73						
	4-Wire Unbundled HDSL Loop without manual service inquiry and facility reservation - Zone 3		3	UHL	UHL4W	15.25	94.00	57.00	51.70	9.73						
	Order Coordination for Specified Conversion Time (per LSR)			UHL	OCOSL		18.09									
	CLEC to CLEC Conversion Charge without outside dispatch			UHL	UREWO		86.14	40.40								
4-WIRE DS1 DIGITAL LOOP																
	4-Wire DS1 Digital Loop - Zone 1		1	USL	USLXX	82.55	252.47	157.54	44.70	11.71						
	4-Wire DS1 Digital Loop - Zone 2		2	USL	USLXX	154.18	252.47	157.54	44.70	11.71						
	4-Wire DS1 Digital Loop - Zone 3		3	USL	USLXX	314.52	252.47	157.54	44.70	11.71						
	Order Coordination for Specified Conversion Time (per LSR)			USL	OCOSL		18.09									

UNBUNDLED NETWORK ELEMENTS - Alabama														Attachment: 2		Exhibit: A	
CATEGORY	RATE ELEMENTS	Interim	Zone	BCS	USOC	RATES ($)					Svc Order Submitted Elec per LSR	Svc Order Submitted Manually per LSR	Incremental Charge - Manual Svc Order vs. Electronic-1st	Incremental Charge - Manual Svc Order vs. Electronic-Add'l	Incremental Charge - Manual Svc Order vs. Electronic-Disc 1st	Incremental Charge - Manual Svc Order vs. Electronic-Disc Add'l
						Rec	Nonrecurring		Nonrecurring Disconnect		OSS Rates ($)					
							First	Add'l	First	Add'l	SOMEC	SOMAN	SOMAN	SOMAN	SOMAN	SOMAN
	CLEC to CLEC Conversion Charge without outside dispatch			USL	UREWO		101.09	43.05								
4-WIRE 19.2, 56 OR 64 KBPS DIGITAL GRADE LOOP																
	4 Wire Unbundled Digital 19.2 Kbps		1	UDL	UDL19	26.09	126.27	88.80	59.14	14.50						
	4 Wire Unbundled Digital 19.2 Kbps		2	UDL	UDL19	35.95	126.27	88.80	59.14	14.50						
	4 Wire Unbundled Digital 19.2 Kbps		3	UDL	UDL19	37.88	126.27	88.80	59.14	14.50						
	4 Wire Unbundled Digital Loop 56 Kbps - Zone 1		1	UDL	UDL56	26.09	126.27	88.80	59.14	14.50						
	4 Wire Unbundled Digital Loop 56 Kbps - Zone 2		2	UDL	UDL56	35.95	126.27	88.80	59.14	14.50						
	4 Wire Unbundled Digital Loop 56 Kbps - Zone 3		3	UDL	UDL56	37.88	126.27	88.80	59.14	14.50						
	Order Coordination for Specified Conversion Time (per LSR)			UDL	OCOSL		18.09									
	4 Wire Unbundled Digital Loop 64 Kbps - Zone 1		1	UDL	UDL64	26.09	126.27	88.80	59.14	14.50						
	4 Wire Unbundled Digital Loop 64 Kbps - Zone 2		2	UDL	UDL64	35.95	126.27	88.80	59.14	14.50						
	4 Wire Unbundled Digital Loop 64 Kbps - Zone 3		3	UDL	UDL64	37.88	126.27	88.80	59.14	14.50						
	Order Coordination for Specified Conversion Time (per LSR)			UDL	OCOSL		18.09									
	CLEC to CLEC Conversion Charge without outside dispatch			UDL	UREWO		102.13	49.75								
2-WIRE Unbundled COPPER LOOP																
	2-Wire Unbundled Copper Loop-Designed including manual service inquiry & facility reservation - Zone 1		1	UCL	UCLPB	11.01	112.46	65.30	47.24	7.44						
	2-Wire Unbundled Copper Loop-Designed including manual service inquiry & facility reservation - Zone 2		2	UCL	UCLPB	12.73	112.46	65.30	47.24	7.44						
	2 Wire Unbundled Copper Loop-Designed including manual service inquiry & facility reservation - Zone 3		3	UCL	UCLPB	14.30	112.46	65.30	47.24	7.44						
	Order Coordination for Unbundled Copper Loops (per loop)			UCL	UCLMC		8.15	8.15								
	2-Wire Unbundled Copper Loop-Designed without manual service inquiry and facility reservation - Zone 1	I	1	UCL	UCLPW	11.01	91.46	54.30	47.24	7.44						
	2-Wire Unbundled Copper Loop-Designed without manual service inquiry and facility reservation - Zone 2	I	2	UCL	UCLPW	12.73	91.46	54.30	47.24	7.44						
	2-Wire Unbundled Copper Loop-Designed without manual service inquiry and facility reservation - Zone 3	I	3	UCL	UCLPW	14.30	91.46	54.30	47.24	7.44						
	Order Coordination for Unbundled Copper Loops (per loop)			UCL	UCLMC		8.15	8.15								
	CLEC to CLEC Conversion Charge without outside dispatch (UCL-Des)			UCL	UREWO		97.23	42.48								
4-WIRE COPPER LOOP																
	4-Wire Copper Loop-Designed including manual service inquiry and facility reservation - Zone 1		1	UCL	UCL4S	17.36	135.21	88.05	51.70	9.73						
	4-Wire Copper Loop-Designed including manual service inquiry and facility reservation - Zone 2		2	UCL	UCL4S	20.76	135.21	88.05	51.70	9.73						
	4-Wire Copper Loop-Designed including manual service inquiry and facility reservation - Zone 3		3	UCL	UCL4S	28.21	135.21	88.05	51.70	9.73						
	Order Coordination for Unbundled Copper Loops (per loop)			UCL	UCLMC		8.15	8.15								
	4-Wire Copper Loop-Designed without manual service inquiry and facility reservation - Zone 1	I	1	UCL	UCL4W	17.36	114.21	67.05	51.70	9.73						
	4-Wire Copper Loop-Designed without manual service inquiry and facility reservation - Zone 2	I	2	UCL	UCL4W	20.76	114.21	67.05	51.70	9.73						
	4-Wire Copper Loop-Designed without manual service inquiry and facility reservation - Zone 3	I	3	UCL	UCL4W	28.21	114.21	67.05	51.70	9.73						
	Order Coordination for Unbundled Copper Loops (per loop)			UCL	UCLMC		8.15	8.15								
	CLEC to CLEC conversion Charge without outside dispatch			UCL	UREWO		97.23	42.48								
LOOP MODIFICATION																
	Unbundled Loop Modification, Removal of Load Coils - 2 Wire pair less than or equal to 18k ft. per Unbundled Loop	I		UAL, UHL, UCL, UEQ, ULS, UEA, UEANL, UEPSR, UEPSB	ULM2L		0.00	0.00								
	Unbundled Loop Modification Removal of Load Coils - 4 Wire less than or equal to 18K ft, per Unbundled Loop	I		UHL, UCL, UEA	ULM4L		0.00	0.00								
	Unbundled Loop Modification Removal of Bridged Tap Removal, per unbundled loop	I		UAL, UHL, UCL, UEQ,ULS,UEA, UEANL, UEPSR, UEPSB	ULMBT		32.41	32.41								
SUB-LOOPS																

UNBUNDLED NETWORK ELEMENTS - Alabama														Attachment: 2		Exhibit: A	
CATEGORY		RATE ELEMENTS	Interim	Zone	BCS	USOC	RATES ($)					Svc Order Submitted Elec per LSR	Svc Order Submitted Manually per LSR	Incremental Charge - Manual Svc Order vs. Electronic-1st	Incremental Charge - Manual Svc Order vs. Electronic-Add'l	Incremental Charge - Manual Svc Order vs. Electronic-Disc 1st	Incremental Charge - Manual Svc Order vs. Electronic-Disc Add'l
							Rec	Nonrecurring		Nonrecurring Disconnect		OSS Rates ($)					
								First	Add'l	First	Add'l	SOMEC	SOMAN	SOMAN	SOMAN	SOMAN	SOMAN
	Sub-Loop Distribution																
		Sub-Loop - Per Cross Box Location - CLEC Feeder Facility Set-Up	I		UEANL	USBSA		244.42									
		Sub-Loop - Per Cross Box Location - Per 25 Pair Panel Set-Up	I		UEANL	USBSB		22.64									
		Sub-Loop - Per Building Equipment Room - CLEC Feeder Facility Set-Up	I		UEANL	USBSC		177.45									
		Sub-Loop - Per Building Equipment Room - Per 25 Pair Panel Set-Up	I		UEANL	USBSD		55.15									
		Sub-Loop Distribution Per 2-Wire Analog Voice Grade Loop - Zone 1		1	UEANL	USBN2	11.21	65.80	30.96	45.25	6.70						
		Sub-Loop Distribution Per 2-Wire Analog Voice Grade Loop - Zone 2		2	UEANL	USBN2	11.94	65.80	30.96	45.25	6.70						
		Sub-Loop Distribution Per 2-Wire Analog Voice Grade Loop - Zone 3		3	UEANL	USBN2	16.86	65.80	30.96	45.25	6.70						
		Order Coordination for Unbundled Sub-Loops, per sub-loop pair			UEANL	USBMC		8.15	8.15								
		Sub-Loop Distribution Per 4-Wire Analog Voice Grade Loop - Zone 1		1	UEANL	USBN4	8.46	79.03	44.19	49.71	9.07						
		Sub-Loop Distribution Per 4-Wire Analog Voice Grade Loop - Zone 2		2	UEANL	USBN4	16.67	79.03	44.19	49.71	9.07						
		Sub-Loop Distribution Per 4-Wire Analog Voice Grade Loop - Zone 3		3	UEANL	USBN4	32.57	79.03	44.19	49.71	9.07						
		Order Coordination for Unbundled Sub-Loops, per sub-loop pair			UEANL	USBMC		8.15	8.15								
		Sub-Loop 2-Wire Intrabuilding Network Cable (INC)	I		UEANL	USBR2	2.27	53.01	18.17	45.25	6.70						
		Order Coordination for Unbundled Sub-Loops, per sub-loop pair			UEANL	USBMC		8.15	8.15								
		Sub-Loop 4-Wire Intrabuilding Network Cable (INC)	I		UEANL	USBR4	5.16	59.25	24.41	49.71	9.07						
		Order Coordination for Unbundled Sub-Loops, per sub-loop pair			UEANL	USBMC		8.15	8.15								
		Loop Testing - Basic 1st Half Hour			UEANL	URET1		34.16	34.16								
		Loop Testing - Basic Additional Half Hour			UEANL	URETA		19.85	19.85								
		2 Wire Copper Unbundled Sub-Loop Distribution - Zone 1		1	UEF	UCS2X	6.22	65.80	30.96	45.25	6.70						
		2 Wire Copper Unbundled Sub-Loop Distribution - Zone 2		2	UEF	UCS2X	8.76	65.80	30.96	45.25	6.70						
		2 Wire Copper Unbundled Sub-Loop Distribution - Zone 3		3	UEF	UCS2X	11.27	65.80	30.96	45.25	6.70						
		Order Coordination for Unbundled Sub-Loops, per sub-loop pair			UEF	USBMC		8.15	8.15								
		4 Wire Copper Unbundled Sub-Loop Distribution - Zone 1		1	UEF	UCS4X	6.11	79.03	44.19	49.71	9.07						
		4 Wire Copper Unbundled Sub-Loop Distribution - Zone 2		2	UEF	UCS4X	12.61	79.03	44.19	49.71	9.07						
		4 Wire Copper Unbundled Sub-Loop Distribution - Zone 3		3	UEF	UCS4X	15.36	79.03	44.19	49.71	9.07						
		Order Coordination for Unbundled Sub-Loops, per sub-loop pair			UEF	USBMC		8.15	8.15								
		Loop Testing - Basic 1st Half Hour			UEF	URET1		34.16	34.16								
		Loop Testing - Basic Additional Half Hour			UEF	URETA		19.85	19.85								
	Unbundled Network Terminating Wire (UNTW)																
		Unbundled Network Terminating Wire (UNTW) per Pair			UENTW	UENPP	0.40	30.01									
	Network Interface Device (NID)																
		Network Interface Device (NID) - 1-2 lines			UENTW	UND12		43.23	28.38								
		Network Interface Device (NID) - 1-6 lines			UENTW	UND16		63.97	49.11								
		Network Interface Device Cross Connect - 2 W			UENTW	UNDC2		5.87	5.87								
		Network Interface Device Cross Connect - 4W			UENTW	UNDC4		5.87	5.87								
UNE OTHER, PROVISIONING ONLY - NO RATE																	
		NID - Dispatch and Service Order for NID installation			UENTW	UNDBX	0.00	0.00									
		UNTW Circuit Id Establishment, Provisioning Only - No Rate			UENTW	UENCE	0.00	0.00									
		Unbundled Contract Name, Provisioning Only - No Rate			UEANL,UEF,UEQ,UENTW	UNECN	0.00	0.00									
UNE OTHER, PROVISIONING ONLY - NO RATE																	

UNBUNDLED NETWORK ELEMENTS - Alabama														Attachment: 2		Exhibit: A	
CATEGORY		RATE ELEMENTS	Interim	Zone	BCS	USOC	RATES ($)					Svc Order Submitted Elec per LSR	Svc Order Submitted Manually per LSR	Incremental Charge - Manual Svc Order vs. Electronic-1st	Incremental Charge - Manual Svc Order vs. Electronic-Add'l	Incremental Charge - Manual Svc Order vs. Electronic-Disc 1st	Incremental Charge - Manual Svc Order vs. Electronic-Disc Add'l
							Rec	Nonrecurring		Nonrecurring Disconnect		OSS Rates ($)					
								First	Add'l	First	Add'l	SOMEC	SOMAN	SOMAN	SOMAN	SOMAN	SOMAN
		Unbundled Contact Name, Provisioning Only - no rate			UAL,UCL,UDC,UDL, UDN,UEA,UHL,ULC	UNECN	0.00	0.00									
		Unbundled Sub-Loop Feeder-2 Wire Cross Box Jumper - no rate			UEA,UDN,UCL,UDC	USBFQ	0.00	0.00									
		Unbundled Sub-Loop Feeder-4 Wire Cross Box Jumper - no rate			UEA,USL,UCL,UDL	USBFR	0.00	0.00									
		Unbundled DS1 Loop - Superframe Format Option - no rate			USL	CCOSF	0.00	0.00									
		Unbundled DS1 Loop - Expanded Superframe Format option - no rate			USL	CCOEF	0.00	0.00									
HIGH CAPACITY UNBUNDLED LOCAL LOOP																	
		High Capacity Unbundled Local Loop - DS3 - Per Mile per month			UE3	1L5ND	8.38										
		High Capacity Unbundled Local Loop - DS3 - Facility Termination per month			UE3	UE3PX	308.98	451.52	263.94	119.49	83.58						
		High Capacity Unbundled Local Loop - STS-1 - Per Mile per month			UDLSX	1L5ND	8.38										
		High Capacity Unbundled Local Loop - STS-1 - Facility Termination per month			UDLSX	UDLS1	319.83	451.52	263.94	119.49	83.58						
LOOP MAKE-UP																	
		Loop Makeup - Preordering Without Reservation, per working or spare facility queried (Manual).			UMK	UMKLW		20.00	20.00								
		Loop Makeup - Preordering With Reservation, per spare facility queried (Manual).			UMK	UMKLP		21.00	21.00								
		Loop Makeup--With or Without Reservation, per working or spare facility queried (Mechanized)			UMK	UMKMQ		0.59	0.59								
LINE SHARING AND LINE SPLITTING																	
	NOTE 1: The Line Sharing monthly recurring rates for all installations completed from October 02, 2003 through midnight October 01, 2004 shall be billed as follows:																
	NOTE 1: 10/02/2003 – 10/01/2004: 25% of the rate for an unbundled copper loop non-designed ("UCLND")																
	NOTE 1: 10/02/2004 – 10/01/2005: 50% of the rate for UCLND																
	NOTE 1: 10/02/2005 – 10/01/2006: 75% of the rate for UCLND																
	NOTE 1: Above will apply to USOCS: ULSDT and ULSCT																
	****NOTE 2: The Line Sharing monthly recurring rates with USOCs ULSDC and ULSCC applies only to circuits installed and inservice on or before October 1, 2003**																
	LINE SHARING																
	SPLITTERS-CENTRAL OFFICE BASED																
		Line Sharing Splitter, per System 96 Line Capacity			ULS	ULSDA	155.97	188.79	0.00	177.98	0.00						
		Line Sharing Splitter, per System 24 Line Capacity			ULS	ULSDB	38.99	188.79	0.00	177.98	0.00						
		Line Sharing Splitter, Per System, 8 Line Capacity			ULS	ULSD8	12.73	377.58	0.00	355.96	0.00						
		Line Sharing-DLEC Owned Splitter in CO-CFA activaton-deactivation (per LSOD)			ULS	ULSDG		86.47	0.00	49.84	0.00						
	END USER ORDERING-CENTRAL OFFICE BASED LINE SHARING																
		Line Sharing - per Line Activation (BST Owned splitter) - OBSOLETE see **NOTE 2			ULS	ULSDC	0.61	18.51	10.60	10.01	4.92						
		Line Share Service, TRO per line activation, BST owned splitter - Central Office Located (25% of UCLND) - please see NOTE 1 (E:10/2/2003)			ULS	ULSDT	2.80	18.51	10.60	10.01	4.92						
		Line Share Service, TRO per line activation, BST owned splitter - Central Office Located (50% of UCLND) - please see NOTE 1 (E:10/2/2004)			ULS	ULSDT	5.60	18.51	10.60	10.01	4.92						
		Line Share Service, TRO per line activation, BST owned splitter - Central Office Located (75% of UCLND) - please see NOTE 1 (E:10/2/2005)			ULS	ULSDT	8.40	18.51	10.60	10.01	4.92						
		Line Sharing - per Subsequent Activity per Line Rearrangement(BST Owned Splitter			ULS	ULSDS		16.39	8.19								
		Line Sharing - per Subsequent Activity per Line Rearrangement(DLEC Owned Splitter			ULS	ULSCS		16.39	8.19								
		Line Sharing - per Line Activation (DLEC owned Splitter) - OBSOLETE see **NOTE 2			ULS	ULSCC	0.61	47.44	19.31	20.02	9.83						

UNBUNDLED NETWORK ELEMENTS - Alabama														Attachment: 2		Exhibit: A	
CATEGORY		RATE ELEMENTS	Interim	Zone	BCS	USOC	RATES ($)					Svc Order Submitted Elec per LSR	Svc Order Submitted Manually per LSR	Incremental Charge - Manual Svc Order vs. Electronic-1st	Incremental Charge - Manual Svc Order vs. Electronic-Add'l	Incremental Charge - Manual Svc Order vs. Electronic-Disc 1st	Incremental Charge - Manual Svc Order vs. Electronic-Disc Add'l
							Rec	Nonrecurring		Nonrecurring Disconnect		OSS Rates ($)					
								First	Add'l	First	Add'l	SOMEC	SOMAN	SOMAN	SOMAN	SOMAN	SOMAN
		Line Share Service, TRO per line activation, CLEC owned splitter - Central Office Located (25% of UCLND) - please see NOTE 1 (E:10/2/2003)			ULS	ULSCT	2.80	47.44	19.31	20.02	9.83						
		Line Share Service, TRO per line activation, CLEC owned splitter - Central Office Located (50% of UCLND) - please see NOTE 1 (E:10/2/2004)			ULS	ULSCT	5.60	47.44	19.31	20.02	9.83						
		Line Share Service, TRO per line activation, CLEC owned splitter - Central Office Located (75% of UCLND) - please see NOTE 1 (E:10/2/2005)			ULS	ULSCT	8.40	47.44	19.31	20.02	9.83						
	LINE SPLITTING																
	END USER ORDERING-CENTRAL OFFICE BASED																
		Line Splitting - per line activation DLEC owned splitter			UEPSR UEPSB	UREOS	0.61										
		Line Splitting - per line activation BST owned - physical			UEPSR UEPSB	UREBP	0.61	37.01	21.19	20.02	9.83						
		Line Splitting - per line activation BST owned - virtual			UEPSR UEPSB	UREBV	0.61	37.01	21.19	20.02	9.83						
	MAINTENANCE																
		No Trouble Found - per 1/2 hour increments - Basic						80.00	55.00								
		No Trouble Found - per 1/2 hour increments - Overtime						120.00	82.50								
		No Trouble Found - per 1/2 hour increments - Premium						160.00	110.00								
UNBUNDLED DEDICATED TRANSPORT																	
	INTEROFFICE CHANNEL - DEDICATED TRANSPORT																
		Interoffice Channel - Dedicated Transport - 2-Wire Voice Grade - Per Mile per month			U1TVX	1L5XX	0.008838										
		Interoffice Channel - Dedicated Transport- 2- Wire Voice Grade - Facility Termination			U1TVX	U1TV2	21.13	40.54	27.41	16.74	6.90						
		Interoffice Channel - Dedicated Transpor t- 2-Wire Voice Grade Rev Bat. - Per Mile per month			U1TVX	1L5XX	0.008838										
		Interoffice Channel - Dedicated Transport- 2- Wire VG Rev Bat. - Facility Termination			U1TVX	U1TR2	21.13	40.54	27.41	16.74	6.90						
		Interoffice Channel - Dedicated Transport - 4-Wire Voice Grade - Per Mile per month			U1TVX	1L5XX	0.008838										
		Interoffice Channel - Dedicated Transport - 4- Wire Voice Grade - Facility Termination			U1TVX	U1TV4	18.73	40.54	27.41	16.74	6.90						
		Interoffice Channel - Dedicated Transport - 56 kbps - per mile per month			U1TDX	1L5XX	0.008838										
		Interoffice Channel - Dedicated Transport - 56 kbps - Facility Termination			U1TDX	U1TD5	15.12	40.54	27.41	16.74	6.90						
		Interoffice Channel - Dedicated Transport - 64 kbps - per mile per month			U1TDX	1L5XX	0.008838										
		Interoffice Channel - Dedicated Transport - 64 kbps - Facility Termination			U1TDX	U1TD6	15.12	40.54	27.41	16.74	6.90						
		Interoffice Channel - Dedicated Channel - DS1 - Per Mile per month			U1TD1	1L5XX	0.18										
		Interoffice Channel - Dedicated Tranport - DS1 - Facility Termination			U1TD1	U1TF1	60.16	89.27	81.81	16.35	14.44						
		Interoffice Channel - Dedicated Transport - DS3 - Per Mile per month			U1TD3	1L5XX	4.09										
		Interoffice Channel - Dedicated Transport - DS3 - Facility Termination per month			U1TD3	U1TF3	703.52	278.75	162.76	60.20	28.46						
		Interoffice Channel - Dedicated Transport - STS-1 - Per Mile per month			U1TS1	1L5XX	4.09										
		Interoffice Channel - Dedicated Transport - STS-1 - Facility Termination			U1TS1	U1TFS	701.37	278.75	162.76	60.20	28.46						
DARK FIBER																	
		Dark Fiber, Four Fiber Strands, Per Route Mile or Fraction Thereof per month - Interoffice Channel			UDF, UDFCX	1L5DF	23.29										
		NRC Dark Fiber - Interoffice Channel			UDF, UDFCX	UDF14		639.09	137.87	317.06	197.66						
		Dark Fiber, Four Fiber Strands, Per Route Mile or Fraction Thereof per month - Local Loop			UDF, UDFCX	1L5DL	60.32										
		NRC Dark Fiber - Local Loop			UDF, UDFCX	UDFL4		639.09	137.87	317.06	197.66						

UNBUNDLED NETWORK ELEMENTS - Alabama														Attachment: 2		Exhibit: A	
CATEGORY		RATE ELEMENTS	Interim	Zone	BCS	USOC	RATES ($)					Svc Order Submitted Elec per LSR	Svc Order Submitted Manually per LSR	Incremental Charge - Manual Svc Order vs. Electronic-1st	Incremental Charge - Manual Svc Order vs. Electronic-Add'l	Incremental Charge - Manual Svc Order vs. Electronic-Disc 1st	Incremental Charge - Manual Svc Order vs. Electronic-Disc Add'l
							Rec	Nonrecurring		Nonrecurring Disconnect		OSS Rates ($)					
								First	Add'l	First	Add'l	SOMEC	SOMAN	SOMAN	SOMAN	SOMAN	SOMAN
8XX ACCESS TEN DIGIT SCREENING																	
		8XX Access Ten Digit Screening, Per Call			OHD		0.00056										
		8XX Access Ten Digit Screening, Reservation Charge Per 8XX Number Reserved			OHD	N8R1X		2.58	0.44								
		8XX Access Ten Digit Screening, Per 8XX No. Established W/O POTS Translations			OHD			5.94	0.81	4.57	0.54						
		8XX Access Ten Digit Screening, Per 8XX No. Established With POTS Translations			OHD	N8FTX		5.94	0.81	4.57	0.54						
		8XX Access Ten Digit Screening, Customized Area of Service Per 8XX Number			OHD	N8FCX		2.58	1.29								
		8XX Access Ten Digit Screening, Multiple InterLATA CXR Routing Per CXR Requested Per 8XX No.			OHD	N8FMX		3.02	1.73								
		8XX Access Ten Digit Screening, Change Charge Per Request			OHD	N8FAX		3.02	0.44								
		8XX Access Ten Digit Screening, Call Handling and Destination Features			OHD	N8FDX		2.58									
		8XX Access Ten Digit Screening, w/ 8FL No. Delivery			OHD		0.000565										
		8XX Access Ten Digit Screening, w/ POTS No. Delivery			OHD		0.000565										
LINE INFORMATION DATA BASE ACCESS (LIDB)																	
		LIDB Common Transport Per Query			OQT		0.00002										
		LIDB Validation Per Query			OQU		0.012002										
		LIDB Originating Point Code Establishment or Change			OQT, OQU	NRBPX		34.32		42.08							
SIGNALING (CCS7)																	
		CCS7 Signaling Connection, Per 56Kbps Facility					15.46	35.53	35.53	16.44	16.44						
		CCS7 Signaling Termination, Per STP Port			UDB	PT8SX	130.83										
		CCS7 Signaling Usage, Per Call Setup Message					0.0000142										
		CCS7 Signaling Usage, Per TCAP Message			UDB		0.0000569										
		CCS7 Signaling Connection, Per link (A link)			UDB	TPP++	15.46	35.53	35.53	16.44	16.44						
		CCS7 Signaling Connection, Per link (B link) (also known as D link)			UDB	TPP++	15.46	35.53	35.53	16.44	16.44						
		CCS7 Signaling Usage, Per ISUP Message			UDB		0.0000142										
		CCS7 Signaling Usage Surrogate, per link per LATA			UDB	STU56	650.33										
		CCS7 Signaling Point Code, per Originating Point Code Establishment or Change, per STP affected			UDB	CCAPO		29.01	29.01	35.57	35.57						
E911 SERVICE																	
		Local Channel - Dedicated - 2-wr Voice Grade					13.97	193.10	33.17	36.64	3.20						
		Interoffice Transport - Dedicated - 2-wr Voice Grade Per Mile					0.008838										
		Interoffice Transport - Dedicated - 2-wr Voice Grade Per Facility Termination					21.13	40.54	27.41	16.74	6.90						
		Local Channel - Dedicated - DS1 - Zone 1					35.76	177.47	153.72	22.19	15.26						
		Local Channel - Dedicated - DS1 - Zone 2					49.98	177.47	153.72	22.19	15.26						
		Local Channel - Dedicated - DS1 - Zone 3					107.63	177.47	153.72	22.19	15.26						
		Interoffice Transport - Dedicated - DS1 Per Mile					0.18										
		Interoffice Transport - Dedicated - DS1 Per Facility Termination					60.16	89.27	81.81	16.35	14.44						
CALLING NAME (CNAM) SERVICE																	
		CNAM For DB Owners - Service Establishment			OQV			22.95		21.11							
		CNAM For Non DB Owners - Service Establishment			OQV			22.95		21.11							
		CNAM For DB Owners - Service Provisioning With Point Code Establishment			OQV			990.88	732.84	268.93	197.74						
		CNAM For Non DB Owners - Service Provisioning With Point Code Establishment			OQV			342.33	245.14	275.25	197.74						
		CNAM for DB Owners, Per Query			OQV		0.000902										
		CNAM for Non DB Owners, Per Query			OQV		0.000902										
SELECTIVE ROUTING																	
		Selective Routing Per Unique Line Class Code Per Request Per Switch						84.70	84.70	14.11	14.11						
VIRTUAL COLLOCATION																	
		Virtual Collocation-2 Wire Cross Connects (Loop) for Line Splitting			UEPSR UEPSB	VE1LS	0.03	12.30	11.80	6.03	5.44						

UNBUNDLED NETWORK ELEMENTS - Alabama														Attachment: 2		Exhibit: A	
CATEGORY		RATE ELEMENTS	Interim	Zone	BCS	USOC	RATES ($)					Svc Order Submitted Elec per LSR	Svc Order Submitted Manually per LSR	Incremental Charge - Manual Svc Order vs. Electronic-1st	Incremental Charge - Manual Svc Order vs. Electronic-Add'l	Incremental Charge - Manual Svc Order vs. Electronic-Disc 1st	Incremental Charge - Manual Svc Order vs. Electronic-Disc Add'l
							Rec	Nonrecurring		Nonrecurring Disconnect		OSS Rates ($)					
								First	Add'l	First	Add'l	SOMEC	SOMAN	SOMAN	SOMAN	SOMAN	SOMAN
PHYSICAL COLLOCATION																	
		Physical Collocation-2 Wire Cross Connects (Loop) for Line Splitting			UEPSR UEPSB	PE1LS	0.03	12.30	11.80	6.03	5.44						
AIN SELECTIVE CARRIER ROUTING																	
		Regional Service Establishment			SRC	SRCEC		101,098.91		8,590.70							
		End Office Establishment			SRC	SRCEO		169.88	169.88	1.70	1.70						
		Query NRC, per query			SRC		0.002749										
AIN - BELLSOUTH AIN SMS ACCESS SERVICE																	
		AIN SMS Access Service - Service Establishment, Per State, Initial Setup			A1N	CAMSE		39.44	39.44	40.69	40.69						
		AIN SMS Access Service - Port Connection - Dial/Shared Access			A1N	CAMDP		7.83	7.83	9.09	9.09						
		AIN SMS Access Service - Port Connection - ISDN Access			A1N	CAM1P		7.83	7.83	9.09	9.09						
		AIN SMS Access Service - User Identification Codes - Per User ID Code			A1N	CAMAU		35.00	35.00	27.06	27.06						
		AIN SMS Access Service - Security Card, Per User ID Code, Initial or Replacement			A1N	CAMRC		41.88	41.88	11.71	11.71						
		AIN SMS Access Service - Storage, Per Unit (100 Kilobytes)					0.002188										
		AIN SMS Access Service - Session, Per Minute					0.59										
		AIN SMS Access Service - Company Performed Session, Per Minute					0.73										
AIN - BELLSOUTH AIN TOOLKIT SERVICE																	
		AIN Toolkit Service - Service Establishment Charge, Per State, Initial Setup			CAM	BAPSC		39.44	39.44	40.69	40.69						
		AIN Toolkit Service - Training Session, Per Customer				BAPVX		4,202.17	4,202.17								
		AIN Toolkit Service - Trigger Access Charge, Per Trigger, Per DN, Term. Attempt				BAPTT		7.83	7.83	9.09	9.09						
		AIN Toolkit Service - Trigger Access Charge, Per Trigger, Per DN, Off-Hook Delay				BAPTD		7.83	7.83	9.09	9.09						
		AIN Toolkit Service - Trigger Access Charge, Per Trigger, Per DN, Off-Hook Immediate				BAPTM		7.83	7.83	9.09	9.09						
		AIN Toolkit Service - Trigger Access Charge, Per Trigger, Per DN, 10-Digit PODP				BAPTO		34.47	34.47	14.36	14.36						
		AIN Toolkit Service - Trigger Access Charge, Per Trigger, Per DN, CDP				BAPTC		34.47	34.47	14.36	14.36						
		AIN Toolkit Service - Trigger Access Charge, Per Trigger, Per DN, Feature Code				BAPTF		34.47	34.47	14.36	14.36						
		AIN Toolkit Service - Query Charge, Per Query					0.05										
		AIN Toolkit Service - Type 1 Node Charge, Per AIN Toolkit Subscription, Per Node, Per Query					0.00582										
		AIN Toolkit Service - SCP Storage Charge, Per SMS Access Account, Per 100 Kilobytes					0.05										
		AIN Toolkit Service - Monthly report - Per AIN Toolkit Service Subscription			CAM	BAPMS	10.17	7.83	7.83	5.50	5.50						
		AIN Toolkit Service - Special Study - Per AIN Toolkit Service Subscription			CAM	BAPLS	2.87	8.66	8.66								
		AIN Toolkit Service - Call Event Report - Per AIN Toolkit Service Subscription			CAM	BAPDS	7.39	7.83	7.83	5.50	5.50						
		AIN Toolkit Service - Call Event Special Study - Per AIN Toolkit Service Subscription			CAM	BAPES	0.10	8.66	8.66								
ENHANCED EXTENDED LINK (EELs)																	
	NOTE: The monthly recurring and non-recurring charges below will apply and the Switch-As-Is Charge will not apply for UNE combinations provisioned as ' Ordinarily Combined' Network Elements.																
	NOTE: The monthly recurring and the Switch-As-Is Charge and not the non-recurring charges below will apply for UNE combinations provisioned as ' Currently Combined' Network Elements.																
	EXTENTED 2-WIRE VOICE GRADE EXTENDED LOOP WITH DEDICATED DS1 INTEROFFICE TRANSPORT																
		First 2-Wire VG Loop (SL2) in Combination - Zone 1		1	UNCVX	UEAL2	14.38	88.00	55.00	47.24	7.44						
		First 2-Wire VG Loop (SL2) in Combination - Zone 2		2	UNCVX	UEAL2	22.85	88.00	55.00	47.24	7.44						
		First 2-Wire VG Loop (SL2) in Combination - Zone 3		3	UNCVX	UEAL2	36.14	88.00	55.00	47.24	7.44						
		Interoffice Transport - Dedicated - DS1 combination - Per Mile per month			UNC1X	1L5XX	0.18										

UNBUNDLED NETWORK ELEMENTS - Alabama														Attachment: 2		Exhibit: A	
CATEGORY		RATE ELEMENTS	Interim	Zone	BCS	USOC	RATES ($)					Svc Order Submitted Elec per LSR	Svc Order Submitted Manually per LSR	Incremental Charge - Manual Svc Order vs. Electronic-1st	Incremental Charge - Manual Svc Order vs. Electronic-Add'l	Incremental Charge - Manual Svc Order vs. Electronic-Disc 1st	Incremental Charge - Manual Svc Order vs. Electronic-Disc Add'l
							Rec	Nonrecurring		Nonrecurring Disconnect		OSS Rates ($)					
								First	Add'l	First	Add'l	SOMEC	SOMAN	SOMAN	SOMAN	SOMAN	SOMAN
		Interoffice Transport - Dedicated - DS1 combination - Facility Termination per month			UNC1X	U1TF1	60.16	89.27	81.81	16.35	14.44						
		1/0 Channelization System in combination Per Month			UNC1X	MQ1	101.06	91.04	62.57	10.54	9.79						
		Voice Grade COCI - Per Month			UNCVX	1D1VG	0.53	6.58	4.72								
		Each Additional 2-Wire VG Loop (SL 2) in Combination - Zone 1		1	UNCVX	UEAL2	14.38	88.00	55.00	47.24	7.44						
		Each Additional 2-Wire VG Loop (SL 2) in Combination - Zone 2		2	UNCVX	UEAL2	22.85	88.00	55.00	47.24	7.44						
		Each Additional 2-Wire VG Loop (SL 2) in Combination - Zone 3		3	UNCVX	UEAL2	36.14	88.00	55.00	47.24	7.44						
		Voice Grade COCI - Per Month			UNCVX	1D1VG	0.53	6.58	4.72								
		Nonrecurring Currently Combined Network Elements Switch -As-Is Charge			UNC1X	UNCCC		5.59	5.59	6.98	6.98						
	EXTENDED 4-WIRE VOICE GRADE EXTENDED LOOP WITH DEDICATED DS1 INTEROFFICE TRANSPORT																
		First 4-Wire Analog Voice Grade Loop in Combination - Zone 1		1	UNCVX	UEAL4	25.34	131.97	94.51	59.14	14.50						
		First 4-Wire Analog Voice Grade Loop in Combination - Zone 2		2	UNCVX	UEAL4	38.58	131.97	94.51	59.14	14.50						
		First 4-Wire Analog Voice Grade Loop in Combination - Zone 3		3	UNCVX	UEAL4	60.02	131.97	94.51	59.14	14.50						
		Interoffice Transport - Dedicated - DS1 combination - Per Mile Per Month			UNC1X	1L5XX	0.18										
		Interoffice Transport - Dedicated - DS1 - Facility Termination Per Month			UNC1X	U1TF1	60.16	89.27	81.81	16.35	14.44						
		1/0 Channel System in combination Per Month			UNC1X	MQ1	101.06	91.04	62.57	10.54	9.79						
		Voice Grade COCI in combination - per month			UNCVX	1D1VG	0.53	6.58	4.72								
		Additional 4-Wire Analog Voice Grade Loop in same DS1 Interoffice Transport Combination - Zone 1		1	UNCVX	UEAL4	25.34	131.97	94.51	59.14	14.50						
		Additional 4-Wire Analog Voice Grade Loop in same DS1 Interoffice Transport Combination - Zone 2		2	UNCVX	UEAL4	38.58	131.97	94.51	59.14	14.50						
		Additional 4-Wire Analog Voice Grade Loop in same DS1 Interoffice Transport Combination - Zone 3		3	UNCVX	UEAL4	60.02	131.97	94.51	59.14	14.50						
		Additional Voice Grade COCI in combination - per month			UNCVX	1D1VG	0.53	6.58	4.72								
		Nonrecurring Currently Combined Network Elements Switch -As-Is Charge			UNC1X	UNCCC		5.59	5.59	6.98	6.98						
	EXTENDED 4-WIRE 56 KBPS EXTENDED DIGITAL LOOP WITH DEDICATED DS1 INTEROFFICE TRANSPORT																
		First 4-Wire 56Kbps Digital Grade Loop in Combination - Zone 1		1	UNCDX	UDL56	26.09	126.27	88.80	59.14	14.50						
		First 4-Wire 56Kbps Digital Grade Loop in Combination - Zone 2		2	UNCDX	UDL56	35.95	126.27	88.80	59.14	14.50						
		First 4-Wire 56Kbps Digital Grade Loop in Combination - Zone 3		3	UNCDX	UDL56	37.88	126.27	88.80	59.14	14.50						
		Interoffice Transport - Dedicated - DS1 combination - Per Mile Per Month			UNC1X	1L5XX	0.18										
		Interoffice Transport - Dedicated - DS1 - combination Facility Termination Per Month			UNC1X	U1TF1	60.16	89.27	81.81	16.35	14.44						
		1/0 Channel System in combination Per Month			UNC1X	MQ1	101.06	91.04	62.57	10.54	9.79						
		OCU-DP COCI (data) per month (2.4-64kbs)			UNCDX	1D1DD	1.12	6.58	4.72								
		Additional 4-Wire 56Kbps Digital Grade Loop in same DS1 Interoffice Transport Combination - Zone 1		1	UNCDX	UDL56	26.09	126.27	88.80	59.14	14.50						
		Additional 4-Wire 56Kbps Digital Grade Loop in same DS1 Interoffice Transport Combination - Zone 2		2	UNCDX	UDL56	35.95	126.27	88.80	59.14	14.50						
		Additional 4-Wire 56Kbps Digital Grade Loop in same DS1 Interoffice Transport Combination - Zone 3		3	UNCDX	UDL56	37.88	126.27	88.80	59.14	14.50						
		Additional OCU-DP COCI (data) - in combination per month (2.4-64kbs)			UNCDX	1D1DD	1.12	6.58	4.72								
		Nonrecurring Currently Combined Network Elements Switch -As-Is Charge			UNC1X	UNCCC		5.59	5.59	6.98	6.98						
	EXTENDED 4-WIRE 64 KBPS EXTENDED DIGITAL LOOP WITH DEDICATED DS1 INTEROFFICE TRANSPORT																

UNBUNDLED NETWORK ELEMENTS - Alabama														Attachment: 2		Exhibit: A	
CATEGORY		RATE ELEMENTS	Interim	Zone	BCS	USOC	RATES ($)					Svc Order Submitted Elec per LSR	Svc Order Submitted Manually per LSR	Incremental Charge - Manual Svc Order vs. Electronic-1st	Incremental Charge - Manual Svc Order vs. Electronic-Add'l	Incremental Charge - Manual Svc Order vs. Electronic-Disc 1st	Incremental Charge - Manual Svc Order vs. Electronic-Disc Add'l
							Rec	Nonrecurring		Nonrecurring Disconnect		OSS Rates ($)					
								First	Add'l	First	Add'l	SOMEC	SOMAN	SOMAN	SOMAN	SOMAN	SOMAN
		First 4-Wire 64Kbps Digital Grade Loop in Combination - Zone 1		1	UNCDX	UDL64	26.09	126.27	88.80	59.14	14.50						
		First 4-Wire 64Kbps Digital Grade Loop in Combination - Zone 2		2	UNCDX	UDL64	35.95	126.27	88.80	59.14	14.50						
		First 4-Wire 64Kbps Digital Grade Loop in Combination - Zone 3		3	UNCDX	UDL64	37.88	126.27	88.80	59.14	14.50						
		Interoffice Transport - Dedicated - DS1 combination - Per Mile Per Month			UNC1X	1L5XX	0.18										
		interoffice Transport - Dedicated - DS1 combination - Facility Termination Per Month			UNC1X	U1TF1	60.16	89.27	81.81	16.35	14.44						
		1/0 Channel System in combination Per Month			UNC1X	MQ1	101.06	91.04	62.57	10.54	9.79						
		OCU-DP COCI (data) - in combination - per month (2.4-64kbs)			UNCDX	1D1DD	1.12	6.58	4.72								
		Additional 4-Wire 64Kbps Digital Grade Loop in same DS1 Interoffice Transport Combination - Zone 1		1	UNCDX	UDL64	26.09	126.27	88.80	59.14	14.50						
		Additional 4-Wire 64Kbps Digital Grade Loop in same DS1 Interoffice Transport Combination - Zone 2		2	UNCDX	UDL64	35.95	126.27	88.80	59.14	14.50						
		Additional 4-Wire 64Kbps Digital Grade Loop in same DS1 Interoffice Transport Combination - Zone 3		3	UNCDX	UDL64	37.88	126.27	88.80	59.14	14.50						
		Additional OCU-DP COCI (data) - in combination - per month (2.4-64kbs)			UNCDX	1D1DD	1.12	6.58	4.72								
		Nonrecurring Currently Combined Network Elements Switch -As-Is Charge			UNC1X	UNCCC		5.59	5.59	6.98	6.98						
	EXTENDED 4-WIRE DS1 DIGITAL EXTENDED LOOP WITH DEDICATED DS1 INTEROFFICE TRANSPORT																
		4-Wire DS1 Digital Loop in Combination - Zone 1		1	UNC1X	USLXX	82.55	252.47	157.54	44.70	11.71						
		4-Wire DS1 Digital Loop in Combination - Zone 2		2	UNC1X	USLXX	154.18	252.47	157.54	44.70	11.71						
		4-Wire DS1 Digital Loop in Combination - Zone 3		3	UNC1X	USLXX	314.52	252.47	157.54	44.70	11.71						
		Interoffice Transport - Dedicated - DS1 combination - Per Mile Per Month			UNC1X	1L5XX	0.18										
		Interoffice Transport - Dedicated - DS1 combination - Facility Termination Per Month			UNC1X	U1TF1	60.16	89.27	81.81	16.35	14.44						
		Nonrecurring Currently Combined Network Elements Switch -As-Is Charge			UNC1X	UNCCC		5.59	5.59	6.98	6.98						
	EXTENDED 4-WIRE DS1 DIGITAL EXTENDED LOOP WITH DEDICATED DS3 INTEROFFICE TRANSPORT																
		First DS1Loop in Combination - Zone 1		1	UNC1X	USLXX	82.55	252.47	157.54	44.70	11.71						
		First DS1Loop in Combination - Zone 2		2	UNC1X	USLXX	154.18	252.47	157.54	44.70	11.71						
		First DS1Loop in Combination - Zone 3		3	UNC1X	USLXX	314.52	252.47	157.54	44.70	11.71						
		Interoffice Transport - Dedicated - DS3 combination - Per Mile Per Month			UNC3X	1L5XX	4.09										
		Interoffice Transport - Dedicated - DS3 - Facility Termination per month			UNC3X	U1TF3	703.52	278.75	162.76	60.20	58.46						
		3/1 Channel System in combination per month			UNC3X	MQ3	166.13	178.14	93.97	33.26	31.83						
		DS1 COCI in combination per month			UNC1X	UC1D1	12.70	6.58	4.72								
		Additional DS1Loop in DS3 Interoffice Transport Combination - Zone 1		1	UNC1X	USLXX	82.55	252.47	157.54	44.70	11.71						
		Additional DS1Loop in DS3 Interoffice Transport Combination - Zone 2		2	UNC1X	USLXX	154.18	252.47	157.54	44.70	11.71						
		Additional DS1Loop in DS3 Interoffice Transport Combination - Zone 3		3	UNC1X	USLXX	314.52	252.47	157.54	44.70	11.71						
		Additoinal DS1 COCI in combination per month			UNC1X	UC1D1	12.70	6.58	4.72								
		Nonrecurring Currently Combined Network Elements Switch -As-Is Charge			UNC3X	UNCCC		5.59	5.59	6.98	6.98						
	EXTENDED 2-WIRE VOICE GRADE EXTENDED LOOP/ 2 WIRE VOICE GRADE INTEROFFICE TRANSPORT																
		2-WireVG Loop in combination - Zone 1		1	UNCVX	UEAL2	14.38	88.00	55.00	47.24	7.44						
		2-WireVG Loop in combination - Zone 2		2	UNCVX	UEAL2	22.85	88.00	55.00	47.24	7.44						
		2-WireVG Loop in combination - Zone 3		3	UNCVX	UEAL2	36.14	88.00	55.00	47.24	7.44						
		Interoffice Transport - 2-wire VG - Dedicated- Per Mile Per Month			UNCVX	1L5XX	0.008838										
		Interoffice Transport - 2-wire VG - Dedicated - Facility Termination per month			UNCVX	U1TV2	21.13	40.54	27.41	16.74	6.90						

UNBUNDLED NETWORK ELEMENTS - Alabama														Attachment: 2		Exhibit: A	
CATEGORY	RATE ELEMENTS	Interim	Zone	BCS	USOC	RATES ($)					Svc Order Submitted Elec per LSR	Svc Order Submitted Manually per LSR	Incremental Charge - Manual Svc Order vs. Electronic-1st	Incremental Charge - Manual Svc Order vs. Electronic-Add'l	Incremental Charge - Manual Svc Order vs. Electronic-Disc 1st	Incremental Charge - Manual Svc Order vs. Electronic-Disc Add'l
						Rec	Nonrecurring		Nonrecurring Disconnect		OSS Rates ($)					
							First	Add'l	First	Add'l	SOMEC	SOMAN	SOMAN	SOMAN	SOMAN	SOMAN
	Nonrecurring Currently Combined Network Elements Switch -As-Is Charge			UNCVX	UNCCC		5.59	5.59	6.98	6.98						
	EXTENDED 4-WIRE VOICE GRADE EXTENDED LOOP/ 4 WIRE VOICE GRADE INTEROFFICE TRANSPORT															
	4-WireVG Loop in combination - Zone 1		1	UNCVX	UEAL4	25.34	131.97	94.51	59.14	14.50						
	4-WireVG Loop in combination - Zone 2		2	UNCVX	UEAL4	38.58	131.97	94.51	59.14	14.50						
	4-WireVG Loop in combination - Zone 3		3	UNCVX	UEAL4	60.02	131.97	94.51	59.14	14.50						
	Interoffice Transport - 4-wire VG - Dedicated - Per Mile Per Month			UNCVX	1L5XX	0.008838										
	Interoffice Transport - 4-wire VG - Dedicated - Facility Termination per month			UNCVX	U1TV4	18.73	40.54	27.41	16.74	6.90						
	Nonrecurring Currently Combined Network Elements Switch -As-Is Charge			UNCVX	UNCCC		5.59	5.59	6.98	6.98						
	EXTENDED DS3 DIGITAL EXTENDED LOOP WITH DEDICATED DS3 INTEROFFICE TRANSPORT															
	DS3 Local Loop in combination - per mile per month			UNC3X	1L5ND	8.38										
	DS3 Local Loop in combination - Facility Termination per month			UNC3X	UE3PX	308.98	451.52	263.94	119.49	83.58						
	Interoffice Transport - Dedicated - DS3 - Per Mile per month			UNC3X	1L5XX	4.09										
	Interoffice Transport - Dedicated - DS3 combination - Facility Termination per per month			UNC3X	U1TF3	703.52	278.75	162.76	60.20	58.46						
	Nonrecurring Currently Combined Network Elements Switch -As-Is Charge			UNC3X	UNCCC		5.59	5.59	6.98	6.98						
	EXTENDED STS-1 DIGITAL EXTENDED LOOP WITH DEDICATED STS-1 INTEROFFICE TRANSPORT															
	STS-1 Local Lolp in combination - per mile per month			UNCSX	1L5ND	8.38										
	STS-1 Local Loop in combination - Facility Termination per month			UNCSX	UDLS1	319.83	451.52	263.94	119.49	83.58						
	Interoffice Transport - Dedicated - STS-1 combination - per mile per month			UNCSX	1L5XX	4.09										
	Interoffice Transport - Dedicated - STS-1 combination - Facility Termination per month			UNCSX	U1TFS	701.37	278.75	162.76	60.20	58.46						
	Nonrecurring Currently Combined Network Elements Switch -As-Is Charge			UNCSX	UNCCC		5.59	5.59	6.98	6.98						
	EXTENDED 2-WIRE ISDN EXTENDED LOOP WITH DS1 INTEROFFICE TRANSPORT															
	First 2-Wire ISDN Loop in Combination - Zone 1		1	UNCNX	U1L2X	21.88	117.24	79.77	52.88	10.54						
	First 2-Wire ISDN Loop in Combination - Zone 2		2	UNCNX	U1L2X	32.85	117.24	79.77	52.88	10.54						
	First 2-Wire ISDN Loop in Combination - Zone 3		3	UNCNX	U1L2X	48.55	117.24	79.77	52.88	10.54						
	Interoffice Transport - Dedicated - DS1 combination - per mile per month			UNC1X	1L5XX	0.18										
	Interoffice Transport - Dedicated - DS1 combination - Facility Termination per month			UNC1X	U1TF1	60.16	89.27	81.81	16.35	14.44						
	1/0 Channel System in combination - per month			UNC1X	MQ1	101.06	91.04	62.57	10.54	9.79						
	2-wire ISDN COCI (BRITE) - in combination - per month			UNCNX	UC1CA	2.41	6.58	4.72								
	Additional 2-wire ISDN Loop in same DS1Interoffice Transport Combination - Zone 1		1	UNCNX	U1L2X	21.88	117.24	79.77	52.88	10.54						
	Additional 2-wire ISDN Loop in same DS1Interoffice Transport Combination - Zone 2		2	UNCNX	U1L2X	32.85	117.24	79.77	52.88	10.54						
	Additional 2-wire ISDN Loop in same DS1Interoffice Transport Combination - Zone 3		3	UNCNX	U1L2X	48.55	117.24	79.77	52.88	10.54						
	Additional 2-wire ISDN COCI (BRITE) - in combination- per month			UNCNX	UC1CA	2.41	6.58	4.72								
	Nonrecurring Currently Combined Network Elements Switch -As-Is Charge			UNC1X	UNCCC		5.59	5.59	6.98	6.98						
	EXTENDED 4-WIRE DS1 DIGITAL EXTENDED LOOP WITH DEDICATED STS-1 INTEROFFICE TRANSPORT															
	First DS1 Loop Combination - Zone 1		1	UNC1X	USLXX	82.55	252.47	157.54	44.70	11.71						
	First DS1 Loop Combination - Zone 2		2	UNC1X	USLXX	154.18	252.47	157.54	44.70	11.71						
	First DS1 Loop Combination - Zone 3		3	UNC1X	USLXX	314.52	252.47	157.54	44.70	11.71						
	Interoffice Transport - Dedicated - STS-1 combination - Per Mile Per Month			UNCSX	1L5XX	4.09										
	Interoffice Transport - Dedicated - STS-1 combination - Facility Termination per month			UNCSX	U1TFS	701.37	278.75	162.76	60.20	58.46						

UNBUNDLED NETWORK ELEMENTS - Alabama														Attachment: 2		Exhibit: A	
CATEGORY	RATE ELEMENTS	Interim	Zone	BCS	USOC	RATES ($)					Svc Order Submitted Elec per LSR	Svc Order Submitted Manually per LSR	Incremental Charge - Manual Svc Order vs. Electronic-1st	Incremental Charge - Manual Svc Order vs. Electronic-Add'l	Incremental Charge - Manual Svc Order vs. Electronic-Disc 1st	Incremental Charge - Manual Svc Order vs. Electronic-Disc Add'l
						Rec	Nonrecurring		Nonrecurring Disconnect		OSS Rates ($)					
							First	Add'l	First	Add'l	SOMEC	SOMAN	SOMAN	SOMAN	SOMAN	SOMAN
	3/1 Channel System in combination per month			UNCSX	MQ3	166.13	178.14	93.97	33.26	31.83						
	DS1 COCI in combination per month			UNC1X	UC1D1	12.70	6.58	4.72								
	Additional DS1Loop in the same STS-1 Interoffice Transport Combination - Zone 1		1	UNC1X	USLXX	82.55	252.47	157.54	44.70	11.71						
	Additional DS1Loop in the same STS-1 Interoffice Transport Combination - Zone 2		2	UNC1X	USLXX	154.18	252.47	157.54	44.70	11.71						
	Additional DS1Loop in the same STS-1 Interoffice Transport Combination - Zone 3		3	UNC1X	USLXX	314.52	252.47	157.54	44.70	11.71						
	DS1 COCI in combination per month			UNC1X	UC1D1	12.70	6.58	4.72								
	Nonrecurring Currently Combined Network Elements Switch -As-Is Charge			UNCSX	UNCCC		5.59	5.59	6.98	6.98						
EXTENDED 4-WIRE 56 KBPS DIGITAL EXTENDED LOOP WITH 56 KBPS INTEROFFICE TRANSPORT																
	4-wire 56 kbps Local Loop in combination - Zone 1		1	UNCDX	UDL56	26.09	126.27	88.80	59.14	14.50						
	4-wire 56 kbps Local Loop in combination - Zone 2		2	UNCDX	UDL56	35.95	126.27	88.80	59.14	14.50						
	4-wire 56 kbps Local Loop in combination - Zone 3		3	UNCDX	UDL56	37.88	126.27	88.80	59.14	14.50						
	Interoffice Transport - Dedicated - 4-wire 56 kbps combination - Per Mile per month			UNCDX	1L5XX	0.008838										
	Interoffice Transport - Dedicated - 4-wire 56 kbps combination - Facility Termination per month			UNCDX	U1TD5	15.12	40.54	27.41	16.74	6.90						
	Nonrecurring Currently Combined Network Elements Switch -As-Is Charge			UNCDX	UNCCC		5.59	5.59	6.98	6.98						
EXTENDED 4-WIRE 64 KBPS DIGITAL EXTENDED LOOP WITH 64 KBPS INTEROFFICE TRANSPORT																
	4-wire 64 kbps Lcoal Loop in Combination - Zone 1		1	UNCDX	UDL64	26.09	126.27	88.80	59.14	14.50						
	4-wire 64 kbps Lcoal Loop in Combination - Zone 2		2	UNCDX	UDL64	35.95	126.27	88.80	59.14	14.50						
	4-wire 64 kbps Lcoal Loop in Combination - Zone 3		3	UNCDX	UDL64	37.88	126.27	88.80	59.14	14.50						
	Interoffice Transport - Dedicated - 4-wire 64 kbps combination - Per Mile per month			UNCDX	1L5XX	0.008838										
	Interoffice Transport - Dedicated - 4-wire 64 kbps combination - Facility Termination per month			UNCDX	U1TD6	15.12	40.54	27.41	16.74	6.90						
	Nonrecurring Currently Combined Network Elements Switch -As-Is Charge			UNCDX	UNCCC		5.59	5.59	6.98	6.98						
EXTENDED 2-WIRE VOICE GRADE LOOP WITH DS1 INTEROFFICE TRANSPORT w/ 3/1 MUX																
	First 2-wire VG Loop (SL2) in Combination - Zone 1		1	UNCVX	UEAL2	14.38	88.00	55.00	47.24	7.44						
	First 2-wire VG Loop (SL2) in Combination - Zone 2		2	UNCVX	UEAL2	22.85	88.00	55.00	47.24	7.44						
	First 2-wire VG Loop (SL2) in Combination - Zone 3		3	UNCVX	UEAL2	36.14	88.00	55.00	47.24	7.44						
	First Interoffice Transport - Dedicated - DS1 combination - Per Mile			UNC1X	1L5XX	0.18										
	First Interoffice Transport - Dedicated - DS1 combination - Facility Termination per month			UNC1X	U1TF1	60.16	89.27	81.81	16.35	14.44						
	Per each DS1 Channelization System Per Month			UNC1X	MQ1	101.06	91.04	62.57	10.54	9.79						
	Per each Voice Grade COCI - Per Month per month			UNCVX	1D1VG	0.53	6.58	4.72								
	3/1 Channel System in combination per month			UNC3X	MQ3	166.13	178.14	93.97	33.26	31.83						
	Per each DS1 COCI in combination per month			UNC1X	UC1D1	12.70	6.58	4.72								
	Each Additional 2-Wire VG Loop(SL 2) in the same DS1 Interoffice Transport Combination - Zone 1		1	UNCVX	UEAL2	14.38	88.00	55.00	47.24	7.44						
	Each Additional 2-Wire VG Loop(SL2) in the same DS1 Interoffice Transport Combination - Zone 2		2	UNCVX	UEAL2	22.85	88.00	55.00	47.24	7.44						
	Each Additional 2-Wire VG Loop(SL2) in the same DS1 Interoffice Transport Combination - Zone 3		3	UNCVX	UEAL2	36.14	88.00	55.00	47.24	7.44						
	Each Additional Voice Grade COCI - in combination - per month			UNCVX	1D1VG	0.53	6.58	4.72								
	Each Additional DS1 Interoffice Channel per mile in same 3/1 Channel System per month			UNC1X	1L5XX	0.18										
	Each Additional DS1 Interoffice Channel Facility Termination in same 3/1 Channel System per month			UNC1X	U1TF1	60.16	89.27	81.81	16.35	14.44						
	Each Additional DS1 COCI combination per month			UNC1X	UC1D1	12.70	6.58	4.72								
	Nonrecurring Currently Combined Network Elements Switch -As-Is Charge			UNC1X	UNCCC		5.59	5.59	6.98	6.98						
EXTENDED 4-WIRE VOICE GRADE LOOP WITH DEDICATED DS1 INTEROFFICE TRANSPORT w/ 3/1 MUX																

UNBUNDLED NETWORK ELEMENTS - Alabama														Attachment: 2		Exhibit: A	
CATEGORY		RATE ELEMENTS	Interim	Zone	BCS	USOC	RATES ($)					Svc Order Submitted Elec per LSR	Svc Order Submitted Manually per LSR	Incremental Charge - Manual Svc Order vs. Electronic-1st	Incremental Charge - Manual Svc Order vs. Electronic-Add'l	Incremental Charge - Manual Svc Order vs. Electronic-Disc 1st	Incremental Charge - Manual Svc Order vs. Electronic-Disc Add'l
							Rec	Nonrecurring		Nonrecurring Disconnect		OSS Rates ($)					
								First	Add'l	First	Add'l	SOMEC	SOMAN	SOMAN	SOMAN	SOMAN	SOMAN
		First 4-Wire Analog Voice Grade Local Loop in Combination - Zone 1		1	UNCVX	UEAL4	25.34	131.97	94.51	59.14	14.50						
		First 4-Wire Analog Voice Grade Local Loop in Combination - Zone 2		2	UNCVX	UEAL4	38.58	131.97	94.51	59.14	14.50						
		First 4-Wire Analog Voice Grade Local Loop in Combination - Zone 3		3	UNCVX	UEAL4	60.02	131.97	94.51	59.14	14.50						
		First Interoffice Transport - Dedicated - DS1 combination - Per Mile Per Month			UNC1X	1L5XX	0.18										
		First Interoffice Transport - Dedicated - DS1 - Facility Termination Per Month			UNC1X	U1TF1	60.16	89.27	81.81	16.35	14.44						
		Per each 1/0 Channel System in combination Per Month			UNC1X	MQ1	101.06	91.04	62.57	10.54	9.79						
		Per each Voice Grade COCI in combination - per month			UNCVX	1D1VG	0.53	6.58	4.72								
		3/1 Channel System in combination per month			UNC3X	MQ3	166.13	178.14	93.97	33.26	31.83						
		Per each DS1 COCI in combination per month			UNC1X	UC1D1	12.70	6.58	4.72								
		Additional 4-Wire Analog Voice Grade Loop in same DS1 Interoffice Transport Combination - Zone 1		1	UNCVX	UEAL4	25.34	131.97	94.51	59.14	14.50						
		Additional 4-Wire Analog Voice Grade Loop in same DS1 Interoffice Transport Combination - Zone 2		2	UNCVX	UEAL4	38.58	131.97	94.51	59.14	14.50						
		Additional 4-Wire Analog Voice Grade Loop in same DS1 Interoffice Transport Combination - Zone 3		3	UNCVX	UEAL4	60.02	131.97	94.51	59.14	14.50						
		Each Additional DS1 Interoffice Channel per mile in same 3/1 Channel System per month			UNC1X	1L5XX	0.18										
		Each Additional DS1 Interoffice Channel Facility Termination in same 3/1 Channel System per month			UNC1X	U1TF1	60.16	89.27	81.81	16.35	14.44						
		Additional Voice Grade COCI - in combination - per month			UNCVX	1D1VG	0.53	6.58	4.72								
		Nonrecurring Currently Combined Network Elements Switch -As-Is Charge			UNC1X	UNCCC		5.59	5.59	6.98	6.98						
	EXTENDED 4-WIRE 56 KBPS DIGITAL LOOP WITH DEDICATED DS1 INTEROFFICE TRANSPORT w/ 3/1 MUX																
		First 4-Wire 56Kbps Digital Grade Local Loop in Combination - Zone 1		1	UNCDX	UDL56	26.09	126.27	88.80	59.14	14.50						
		First 4-Wire 56Kbps Digital Grade Local Loop in Combination - Zone 2		2	UNCDX	UDL56	35.95	126.27	88.80	59.14	14.50						
		First 4-Wire 56Kbps Digital Grade Local Loop in Combination - Zone 3		3	UNCDX	UDL56	37.88	126.27	88.80	59.14	14.50						
		First Interoffice Transport - Dedicated - DS1 combination - Per Mile Per Month			UNC1X	1L5XX	0.18										
		First Interoffice Transport - Dedicated - DS1 - combination Facility Termination Per Month			UNC1X	U1TF1	60.16	89.27	81.81	16.35	14.44						
		Per each 1/0 Channel System in combination Per Month			UNC1X	MQ1	101.06	91.04	62.57	10.54	9.79						
		Per each OCU-DP COCI (data) COCI per month (2.4-64kbs)			UNCDX	1D1DD	1.12	6.58	4.72								
		3/1 Channel System in combination per month			UNC3X	MQ3	166.13	178.14	93.97	33.26	31.83						
		Per each DS1 COCI in combination per month			UNC1X	UC1D1	12.70	6.58	4.72								
		Additional 4-Wire 56Kbps Digital Grade Loop in same DS1 Interoffice Transport Combination - Zone 1		1	UNCDX	UDL56	26.09	126.27	88.80	59.14	14.50						
		Additional 4-Wire 56Kbps Digital Grade Loop in same DS1 Interoffice Transport Combination - Zone 2		2	UNCDX	UDL56	35.95	126.27	88.80	59.14	14.50						
		Additional 4-Wire 56Kbps Digital Grade Loop in same DS1 Interoffice Transport Combination - Zone 3		3	UNCDX	UDL56	37.88	126.27	88.80	59.14	14.50						
		OCU-DP COCI (data) COCI in combination per month (2.4-64kbs)			UNCDX	1D1DD	1.12	6.58	4.72								
		Each Additional DS1 Interoffice Channel per mile in same 3/1 Channel System per month			UNC1X	1L5XX	0.18										
		Each Additional DS1 Interoffice Channel Facility Termination in same 3/1 Channel System per month			UNC1X	U1TF1	60.16	89.27	81.81	16.35	14.44						
		Each Additional DS1 COCI in the same 3/1 channel system combination per month			UNC1X	UC1D1	12.70	6.58	4.72								
		Nonrecurring Currently Combined Network Elements Switch -As-Is Charge			UNC1X	UNCCC		5.59	5.59	6.98	6.98						
	EXTENDED 4-WIRE 64 KBPS DIGITAL LOOP WITH DEDICATED DS1 INTEROFFICE TRANSPORT w/ 3/1 MUX																

UNBUNDLED NETWORK ELEMENTS - Alabama														Attachment: 2		Exhibit: A	
CATEGORY		RATE ELEMENTS	Interim	Zone	BCS	USOC	RATES ($)					Svc Order Submitted Elec per LSR	Svc Order Submitted Manually per LSR	Incremental Charge - Manual Svc Order vs. Electronic-1st	Incremental Charge - Manual Svc Order vs. Electronic-Add'l	Incremental Charge - Manual Svc Order vs. Electronic-Disc 1st	Incremental Charge - Manual Svc Order vs. Electronic-Disc Add'l
							Rec	Nonrecurring		Nonrecurring Disconnect		OSS Rates ($)					
								First	Add'l	First	Add'l	SOMEC	SOMAN	SOMAN	SOMAN	SOMAN	SOMAN
		First 4-Wire 64Kbps Digital Grade Loop in a DS1 Interoffice Transport Combination - Zone 1		1	UNCDX	UDL64	26.09	126.27	88.80	59.14	14.50						
		First 4-Wire 64Kbps Digital Grade Loop in a DS1 Interoffice Transport Combination - Zone 2		2	UNCDX	UDL64	35.95	126.27	88.80	59.14	14.50						
		First 4-Wire 64Kbps Digital Grade Loop in a DS1 Interoffice Transport Combination - Zone 3		3	UNCDX	UDL64	37.88	126.27	88.80	59.14	14.50						
		First Interoffice Transport - Dedicated - DS1 combination - Per Mile Per Month			UNC1X	1L5XX	0.18										
		First Interoffice Transport - Dedicated - DS1 combination - Facility Termination Per Month			UNC1X	U1TF1	60.16	89.27	81.81	16.35	14.44						
		Per each Channel System 1/0 in combination Per Month			UNC1X	MQ1	101.06	91.04	62.57	10.54	9.79						
		Per each OCU-DP COCI (data) in combination - per month (2.4-64kbs)			UNCDX	1D1DD	1.12	6.58	4.72								
		3/1 Channel System in combination per month			UNC3X	MQ3	166.13	178.14	93.97	33.26	31.83						
		Per each DS1 COCI in combination per month			UNC1X	UC1D1	12.70	6.58	4.72								
		Additional 4-Wire 64Kbps Digital Grade Loop in same DS1 Interoffice Transport Combination - Zone 1		1	UNCDX	UDL64	26.09	126.27	88.80	59.14	14.50						
		Additional 4-Wire 64Kbps Digital Grade Loop in same DS1 Interoffice Transport Combination - Zone 2		2	UNCDX	UDL64	35.95	126.27	88.80	59.14	14.50						
		Additional 4-Wire 64Kbps Digital Grade Loop in same DS1 Interoffice Transport Combination - Zone 3		3	UNCDX	UDL64	37.88	126.27	88.80	59.14	14.50						
		Additional OCU-DP COCI (data) - DS1 to DS0 Channel System combination - per month (2.4-64kbs)			UNCDX	1D1DD	1.12	6.58	4.72								
		Each Additional DS1 Interoffice Channel per mile in same 3/1 Channel System per month			UNC1X	1L5XX	0.18										
		Each Additional DS1 Interoffice Channel Facility Termination in same 3/1 Channel System per month			UNC1X	U1TF1	60.16	89.27	81.81	16.35	14.44						
		Each Additional DS1 COCI in the same 3/1 channel system combination per month			UNC1X	UC1D1	12.70	6.58	4.72								
		Nonrecurring Currently Combined Network Elements Switch -As-Is Charge			UNC1X	UNCCC		5.59	5.59	6.98	6.98						
	EXTENDED 2-WIRE ISDN LOOP WITH DS1 INTEROFFICE TRANSPORT w/ 3/1 MUX																
		First 2-Wire ISDN Loop in a DS1 Interoffice Combination Transport - Zone 1		1	UNCNX	U1L2X	21.88	117.24	79.77	52.88	10.54						
		First 2-Wire ISDN Loop in a DS1 Interoffice Combination Transport - Zone 2		2	UNCNX	U1L2X	32.85	117.24	79.77	52.88	10.54						
		First 2-Wire ISDN Loop in a DS1 Interoffice Combination Transport - Zone 3		3	UNCNX	U1L2X	48.55	117.24	79.77	52.88	10.54						
		First Interoffice Transport - Dedicated - DS1 combination - Per Mile per month			UNC1X	1L5XX	0.18										
		First Interoffice Transport - Dedicated - DS1 combination - Facility Termination per month			UNC1X	U1TF1	60.16	89.27	81.81	16.35	14.44						
		Per each Channel System 1/0 in combination - per month			UNC1X	MQ1	101.06	91.04	62.57	10.54	9.79						
		Per each 2-wire ISDN COCI (BRITE) in combination - per month			UNCNX	UC1CA	2.41	6.58	4.72								
		3/1 Channel System in combination per month			UNC3X	MQ3	166.13	178.14	93.97	33.26	31.83						
		Per each DS1 COCI in combination per month			UNC1X	UC1D1	12.70	6.58	4.72								
		Additional 2-wire ISDN Loop in same DS1Interoffice Transport Combination - Zone 1		1	UNCNX	U1L2X	21.88	117.24	79.77	52.88	10.54						
		Additional 2-wire ISDN Loop in same DS1Interoffice Transport Combination - Zone 2		2	UNCNX	U1L2X	32.85	117.24	79.77	52.88	10.54						
		Additional 2-wire ISDN Loop in same DS1Interoffice Transport Combination - Zone 3		3	UNCNX	U1L2X	48.55	117.24	79.77	52.88	10.54						
		Additional 2-wire ISDN COCI (BRITE) in same 1/0 channel system combination- per month			UNCNX	UC1CA	2.41	6.58	4.72								
		Each Additional DS1 Interoffice Channel per mile in same 3/1 Channel System per month			UNC1X	1L5XX	0.18										
		Each Additional DS1 Interoffice Channel Facility Termination in same 3/1 Channel System per month			UNC1X	U1TF1	60.16	89.27	81.81	16.35	14.44						

UNBUNDLED NETWORK ELEMENTS - Alabama														Attachment: 2		Exhibit: A	
CATEGORY		RATE ELEMENTS	Interim	Zone	BCS	USOC	RATES ($)					Svc Order Submitted Elec per LSR	Svc Order Submitted Manually per LSR	Incremental Charge - Manual Svc Order vs. Electronic-1st	Incremental Charge - Manual Svc Order vs. Electronic-Add'l	Incremental Charge - Manual Svc Order vs. Electronic-Disc 1st	Incremental Charge - Manual Svc Order vs. Electronic-Disc Add'l
							Rec	Nonrecurring		Nonrecurring Disconnect		OSS Rates ($)					
								First	Add'l	First	Add'l	SOMEC	SOMAN	SOMAN	SOMAN	SOMAN	SOMAN
		Each Additional DS1 COCI in the same 3/1 channel system combination per month			UNC1X	UC1D1	12.70	6.58	4.72								
		Nonrecurring Currently Combined Network Elements Switch -As-Is Charge			UNC1X	UNCCC		5.59	5.59	6.98	6.98						
	EXTENDED 4-WIRE DS1 LOOP WITH DEDICATED DS1 INTEROFFICE TRANSPORT w/ 3/1 MUX																
		First 4-wire DS1 Digital Lcoal Loop in Combination - Zone 1		1	UNC1X	USLXX	82.55	252.47	157.54	44.70	11.71						
		First 4-wire DS1 Digital Lcoal Loop in Combination - Zone 2		2	UNC1X	USLXX	154.18	252.47	157.54	44.70	11.71						
		First 4-wire DS1 Digital Lcoal Loop in Combination - Zone 3		3	UNC1X	USLXX	314.52	252.47	157.54	44.70	11.71						
		First Interoffice Transport - Dedicated - DS1 combination - Per Mile Per Month			UNC1X	1L5XX	0.18										
		First Interoffice Transport - Dedicated - DS1 combination - Facility Termination Per Month			UNC1X	U1TF1	60.16	89.27	81.81	16.35	14.44						
		3/1 Channel System in combination per month			UNC3X	MQ3	166.13	178.14	93.97	33.26	31.83						
		Per each DS1 COCI combination per month			UNC1X	UC1D1	12.70	6.58	4.72								
		Each Additional DS1 Interoffice Channel per mile in same 3/1 Channel System per month			UNC1X	1L5XX	0.18										
		Each Additional DS1 Interoffice Channel Facility Termination in same 3/1 Channel System per month			UNC1X	U1TF1	60.16	89.27	81.81	16.35	14.44						
		Each Additional DS1 COCI in the same 3/1 channel system combination per month			UNC1X	UC1D1	12.70	6.58	4.72								
		Additional 4-Wire DS1 Digital Local Loop in Combination - Zone 1		1	UNC1X	USLXX	82.55	252.47	157.54	44.70	11.71						
		Additional 4-Wire DS1 Digital Local Loop in Combination - Zone 2		2	UNC1X	USLXX	154.18	252.47	157.54	44.70	11.71						
		Additional 4-Wire DS1 Digital Local Loop in Combination - Zone 3		3	UNC1X	USLXX	314.52	252.47	157.54	44.70	11.71						
		Nonrecurring Currently Combined Network Elements Switch -As-Is Charge			UNC1X	UNCCC		5.59	5.59	6.98	6.98						
	EXTENDED 4-WIRE 56 KBPS DIGITAL EXTENDED LOOP WITH DS0 INTEROFFICE TRANSPORT																
		First 4-wire 56 kbps Local Loop in combination - Zone 1		1	UNCDX	UDL56	26.09	126.27	88.80	59.14	14.50						
		First 4-wire 56 kbps Local Loop in combination - Zone 2		2	UNCDX	UDL56	35.95	126.27	88.80	59.14	14.50						
		First 4-wire 56 kbps Local Loop in combination - Zone 3		3	UNCDX	UDL56	37.88	126.27	88.80	59.14	14.50						
		First 4-wiree 56 kbps Interoffice Transport - Dedicated - Per Mile per month			UNCDX	1L5XX	0.008838										
		First 4-wire 56 kbps Interoffice Transport - Dedicated - Facility Termination per month			UNCDX	U1TD5	15.12	40.54	27.41	16.74	6.90						
		Nonrecurring Currently Combined Network Elements Switch -As-Is Charge			UNCDX	UNCCC		5.59	5.59	6.98	6.98						
	EXTENDED 4-WIRE 64 KBPS DIGITAL EXTENDED LOOP WITH DS0 INTEROFFICE TRANSPORT																
		First 4-wire 64 kbps Local Loop in combination - Zone 1		1	UNCDX	UDL64	26.09	126.27	88.80	59.14	14.50						
		First 4-wire 64 kbps Local Loop in combination - Zone 2		2	UNCDX	UDL64	35.95	126.27	88.80	59.14	14.50						
		First 4-wire 64 kbps Local Loop in combination - Zone 3		3	UNCDX	UDL64	37.88	126.27	88.80	59.14	14.50						
		First l4-wire 65 kbps Interoffice Transport - Dedicated - Per Mile per month			UNCDX	1L5XX	0.008838										
		First 4-wire 64 kbps Interoffice Transport - Dedicated - Facility Termination per month			UNCDX	U1TD6	15.12	40.54	27.41	16.74	6.90						
		Nonrecurring Currently Combined Network Elements Switch -As-Is Charge			UNCDX	UNCCC		5.59	5.59	6.98	6.98						
ADDITIONAL NETWORK ELEMENTS																	
	When used as a part of a currently combined facility, the non-recurrng charges do not apply, but a Switch As Is charge does apply.																
	When used as ordinarily combined network elements in All States, the non-recurring charges apply and the Switch As Is Charge does not.																
	Nonrecurring Currently Combined Network Elements "Switch As Is" Charge (One applies to each combination)																
		Nonrecurring Currently Combined Network Elements Switch -As-Is Charge - 2 wire/4-Wire VG			UNCVX	UNCCC		5.59	5.59	6.98	6.98						
		Nonrecurring Currently Combined Network Elements Switch -As-Is Charge - 56/64 kbps			UNCDX	UNCCC		5.59	5.59	6.98	6.98						
		Nonrecurring Currently Combined Network Elements Switch -As-Is Charge - DS1			UNC1X	UNCCC		5.59	5.59	6.98	6.98						

UNBUNDLED NETWORK ELEMENTS - Alabama														Attachment: 2		Exhibit: A	
CATEGORY		RATE ELEMENTS	Interim	Zone	BCS	USOC	RATES ($)					Svc Order Submitted Elec per LSR	Svc Order Submitted Manually per LSR	Incremental Charge - Manual Svc Order vs. Electronic-1st	Incremental Charge - Manual Svc Order vs. Electronic-Add'l	Incremental Charge - Manual Svc Order vs. Electronic-Disc 1st	Incremental Charge - Manual Svc Order vs. Electronic-Disc Add'l
							Rec	Nonrecurring		Nonrecurring Disconnect		OSS Rates ($)					
								First	Add'l	First	Add'l	SOMEC	SOMAN	SOMAN	SOMAN	SOMAN	SOMAN
		Nonrecurring Currently Combined Network Elements Switch -As-Is Charge - DS3			UNC3X	UNCCC		5.59	5.59	6.98	6.98						
		Nonrecurring Currently Combined Network Elements Switch -As-Is Charge - STS1			UNCSX	UNCCC		5.59	5.59	6.98	6.98						
	Optional Features & Functions:																
		Clear Channel Capability Extended Frame Option - per DS1	I		U1TD1, ULDD1,UNC1X	CCOEF		0I	0I	0I	0I						
		Clear Channel Capability Super FrameOption - per DS1	I		U1TD1, ULDD1,UNC1X	CCOSF		0I	0I	0I	0I						
		Clear Channel Capability (SF/ESF) Option - Subsequent Activity - per DS1	I		ULDD1, U1TD1, UNC1X, USL	NRCCC		184.85S	23.81S	1.99S	0.7741S						
		C-bit Parity Option - Subsequent Activity - per DS3	i		U1TD3, ULDD3, UE3, UNC3X	NRCC3		219.13S	7.67S	0.7355S	0S						
	MULTIPLEXERS																
		DS1 to DS0 Channel System per month			UNC1X	MQ1	101.06	91.04	62.57	10.54	9.79						
		OCU-DP COCI (data) - DS1 to DS0 Channel System - per month (2.4-64kbs) used for a Local Loop			UDL	1D1DD	1.12	6.58	4.72	0.00	0.00						
		OCU-DP COCI (data) - DS1 to DS0 Channel System - per month (2.4-64kbs) used for connection to a channelized DS1 Local Channel in the same SWC as collocation			U1TUD	1D1DD	1.12	6.58	4.72	0.00	0.00						
		2-wire ISDN COCI (BRITE) - DS1 to DS0 Channel Systsem - per month for a Local Loop			UDN	UC1CA	2.41	6.58	4.72	0.00	0.00						
		2-wire ISDN COCI (BRITE) - DS1 to DS0 Channel Systsem - per month used for connection to a channelized DS1 Local Channel in the same SWC as collocation			U1TUB	UC1CA	2.41	6.58	4.72	0.00	0.00						
		Voice Grade COCI - DS1 to DS0 Channel System - per month used for a Local Loop			UEA	1D1VG	0.53	6.58	4.72	0.00	0.00						
		Voice Grade COCI - DS1 to DS0 Channel System - per month used for connection to a channelized DS1 Local Channel in the same SWC as collocation			U1TUC	1D1VG	0.53	6.58	4.72	0.00	0.00						
		DS3 to DS1 Channel System per month			UNC3X	MQ3	166.13	178.14	93.97	33.26	31.83						
		STS-1 to DS1 Channel System per month			UNCSX	MQ3	166.13	178.14	93.97	33.26	31.83						
		DS1 COCI used with Loop per month			USL	UC1D1	12.70	6.58	4.72	0.00	0.00						
		DS1 COCI (used for connection to a channelized DS1 Local Channel in the same SWC as collocation) per month			U1TUA	UC1D1	12.70	6.58	4.72	0.00	0.00						
		DS1 COCI used with Interoffice Channel per month			U1TD1	UC1D1	12.70	6.58	4.72	0.00	0.00						
		DS3 Interface Unit (DS1 COCI) used with Local Channel per month			ULDD1	UC1D1	12.70	6.58	4.72	0.00	0.00						
UNBUNDLED LOCAL EXCHANGE SWITCHING(PORTS)																	
	Exchange Ports																
	NOTE: Although the Port Rate includes all available features in GA, KY, LA & TN, the desired features will need to be ordered using retail USOCs																
	2-WIRE VOICE GRADE LINE PORT RATES (RES)																
		Exchange Ports - 2-Wire Analog Line Port- Res.			UEPSR	UEPRL	1.38	2.38	2.27	1.42	1.33						
		Exchange Ports - 2-Wire Analog Line Port with Caller ID - Res.			UEPSR	UEPRC	1.38	2.38	2.27	1.42	1.33						
		Exchange Ports - 2-Wire Analog Line Port outgoing only - Res.			UEPSR	UEPRO	1.38	2.38	2.27	1.42	1.33						
		Exchange Ports - 2-Wire VG unbundled AL extended local dialing parity Port with Caller ID - Res.			UEPSR	UEPAR	1.38	2.38	2.27	1.42	1.33						
		Exchange Ports - 2-Wire VG unbundled res, low usage line port with Caller ID (LUM)			UEPSR	UEPAP	1.38	2.38	2.27	1.42	1.33						
		Exchange Ports - 2-Wire VG Alabama Residence Dialing Plan without Caller Id			UEPSR	UEPWA	1.38	2.38	2.27	1.42	1.33						
		2-Wire voice unbundled Low Usage Line Port without Caller ID Capability			UEPSR	UEPRT	1.38	2.38	2.27	1.42	1.33						
		Subsequent Activity			UEPSR	USASC	0.00	0.00	0.00								
	FEATURES																
		All Available Vertical Features			UEPSR	UEPVF	1.98	0.00	0.00								
	2-WIRE VOICE GRADE LINE PORT RATES (BUS)																

UNBUNDLED NETWORK ELEMENTS - Alabama														Attachment: 2		Exhibit: A	
CATEGORY		RATE ELEMENTS	Interim	Zone	BCS	USOC	RATES ($)					Svc Order Submitted Elec per LSR	Svc Order Submitted Manually per LSR	Incremental Charge - Manual Svc Order vs. Electronic-1st	Incremental Charge - Manual Svc Order vs. Electronic-Add'l	Incremental Charge - Manual Svc Order vs. Electronic-Disc 1st	Incremental Charge - Manual Svc Order vs. Electronic-Disc Add'l
							Rec	Nonrecurring		Nonrecurring Disconnect		OSS Rates ($)					
								First	Add'l	First	Add'l	SOMEC	SOMAN	SOMAN	SOMAN	SOMAN	SOMAN
		Exchange Ports - 2-Wire Analog Line Port without Caller ID - Bus			UEPSB	UEPBL	1.38	2.38	2.27	1.42	1.33						
		Exchange Ports - 2-Wire VG unbundled Line Port with unbundled port with Caller+E484 ID - Bus.			UEPSB	UEPBC	1.38	2.38	2.27	1.42	1.33						
		Exchange Ports - 2-Wire Analog Line Port outgoing only - Bus.			UEPSB	UEPBO	1.38	2.38	2.27	1.42	1.33						
		Exchange Ports - 2-Wire VG unbundled AL extended local dialing parity Port with Caller ID - Bus.			UEPSB	UEPAW	1.38	2.38	2.27	1.42	1.33						
		Exhange Ports - 2-Wire VG unbundled incoming only port with Caller ID - Bus			UEPSB	UEPB1	1.38	2.38	2.27	1.42	1.33						
		Exchange Ports - 2-Wire Voice Alabama Business Dialing Plan without Caller ID			UEPSB	UEPWB	1.38	2.38	2.27	1.42	1.33						
		2-Wire voice unbundled Incoming Only Port without Caller ID Capability			UEPSB	UEPBE	1.38	2.38	2.27	1.42	1.33						
		Subsequent Activity			UEPSB	USASC	0.00	0.00	0.00								
	FEATURES																
		All Available Vertical Features			UEPSB	UEPVF	1.98	0.00	0.00								
	EXCHANGE PORT RATES (DID & PBX)																
		2-Wire VG Unbundled 2-Way PBX Trunk - Res			UEPSE	UEPRD	1.38	31.27	14.85	13.94	0.90						
		2-Wire VG Line Side Unbundled 2-Way PBX Trunk - Bus			UEPSP	UEPPC	1.38	31.27	14.85	13.94	0.90						
		2-Wire VG Line Side Unbundled Outward PBX Trunk - Bus			UEPSP	UEPPO	1.38	31.27	14.85	13.94	0.90						
		2-Wire VG Line Side Unbundled Incoming PBX Trunk - Bus			UEPSP	UEPP1	1.38	31.27	14.85	13.94	0.90						
		2-Wire Analog Long Distance Terminal PBX Trunk - Bus			UEPSP	UEPLD	1.38	31.27	14.85	13.94	0.90						
		2-Wire Voice Unbundled 2-Way PBX Alabama Calling Port			UEPSP	UEPA2	1.38	31.27	14.85	13.94	0.90						
		2-Wire Voice Unbundled PBX LD Terminal Ports			UEPSP	UEPLD	1.38	31.27	14.85	13.94	0.90						
		2-Wire Vice Unbundled 2-Way PBX Usage Port			UEPSP	UEPXA	1.38	31.27	14.85	13.94	0.90						
		2-Wire Voice Unbundled PBX Toll Terminal Hotel Ports			UEPSP	UEPXB	1.38	31.27	14.85	13.94	0.90						
		2-Wire Voice Unbundled PBX LD DDD Terminals Port			UEPSP	UEPXC	1.38	31.27	14.85	13.94	0.90						
		2-Wire Voice Unbundled PBX LD Terminal Switchboard Port			UEPSP	UEPXD	1.38	31.27	14.85	13.94	0.90						
		2-Wire Voice Unbundled PBX LD Terminal Switchboard IDD Capable Port			UEPSP	UEPXE	1.38	31.27	14.85	13.94	0.90						
		2-Wire Voice Unbundled 2-Way PBX Hotel/Hospital Economy Administrative Calling Port			UEPSP	UEPXL	1.38	31.27	14.85	13.94	0.90						
		2-Wire Voice Unbundled 2-Way PBX Hotel/Hospital Economy Room Calling Port			UEPSP	UEPXM	1.38	31.27	14.85	13.94	0.90						
		2-Wire Voice Unbundled 1-Way Outgoing PBX Hotel/Hospital Discount Room Calling Port			UEPSP	UEPXO	1.38	31.27	14.85	13.94	0.90						
		2-Wire Voice Unbundled 1-Way Outgoing PBX Measured Port			UEPSP	UEPXS	1.38	31.27	14.85	13.94	0.90						
		Subsequent Activity			UEPSP	USASC	0.00	0.00	0.00								
	FEATURES																
		All Available Vertical Features			UEPSP UEPSE	UEPVF	1.98	0.00	0.00								
	EXCHANGE PORT RATES (COIN)																
		Exchange Ports - Coin Port					1.38	2.38	2.27	1.42	1.33						
	NOTE: Transmission/usage charges associated with POTS circuit switched usage will also apply to circuit switched voice and/or circuit switched data transmission by B-Channels associated with 2-wire ISDN ports.																
	NOTE: Access to B Channel or D Channel Packet capabilities will be available only through BFR/New Business Request Process. Rates for the packet capabilities will be determined via the Bona Fide Request/New Business Request Process.																
UNBUNDLED LOCAL EXCHANGE SWITCHING(PORTS)																	
	EXCHANGE PORT RATES																
	The DS1 Port rates below for 4-Wire DDITS Trunk Port and 4-Wire ISDN Port in this rate exhibit apply to the embedded base in place as of 10/2/03 until 4/1/04. After 4/1/04 these rates shall revert to tariff rates or a separate agreement.																
	Requests for 4-Wire DDITS Trunk Ports with 4-Wire ISDN DS1 Ports after the effective date of this amendment shall be provided pursuant to a separate agreement or tariff at BellSouth's discretion.																
		Exchange Ports - 2-Wire DID Port			UEPEX	UEPP2	8.05	119.31	18.74	59.90	3.76						
		Exchange Ports - DDITS Port - 4-Wire DS1 Port with DID capability (E:4/1/2004)			UEPDD	UEPDD	60.09	202.02	95.69	72.59	2.46						
		Exchange Ports - 2-Wire ISDN Port (See Notes below.)			UEPTX, UEPSX	U1PMA	9.79	72.77	52.99	47.79	10.74						
		All Features Offered			UEPTX, UEPSX	UEPVF	1.98	0.00	0.00								
		Exchange Ports - 2-Wire ISDN Port -- Channel Profiles			UEPTX, UEPSX	U1UMA	0.00	0.00	0.00								
	NOTE: Transmission/usage charges associated with POTS circuit switched usage will also apply to circuit switched voice and/or circuit switched data transmission by B-Channels associated with 2-wire ISDN ports.																
	NOTE: Access to B Channel or D Channel Packet capabilities will be available only through BFR/New Business Request Process. Rates for the packet capabilities will be determined via the Bona Fide Request/New Business Request Process.																
	EXCHANGE PORT RATES (continued)																

UNBUNDLED NETWORK ELEMENTS - Alabama														Attachment: 2		Exhibit: A	
CATEGORY		RATE ELEMENTS	Interim	Zone	BCS	USOC	RATES ($)					Svc Order Submitted Elec per LSR	Svc Order Submitted Manually per LSR	Incremental Charge - Manual Svc Order vs. Electronic-1st	Incremental Charge - Manual Svc Order vs. Electronic-Add'l	Incremental Charge - Manual Svc Order vs. Electronic-Disc 1st	Incremental Charge - Manual Svc Order vs. Electronic-Disc Add'l
							Rec	Nonrecurring		Nonrecurring Disconnect		OSS Rates ($)					
								First	Add'l	First	Add'l	SOMEC	SOMAN	SOMAN	SOMAN	SOMAN	SOMAN
		Exchange Ports - 4-Wire ISDN DS1 Port with Detailed E911 Locator Capability (E:4/1/2004)			UEPEX	UEPEX	84.32	203.81	101.56	79.18	20.06						
		Exchange Ports - 4-Wire ISDN DS1 Port (E:4/1/2004)			UEPDX	UEPDX	84.32	203.81	101.56	79.18	20.06						
		Physical Collocation - DS1 Cross-Connects			UEPEX UEPDX	PE1P1	1.11	22.03	15.93	6.40	5.79						
		Virtual collocation - Special Access & UNE, cross-connect per DS1			UEPEX UEPDX	CNC1X	1.11	22.03	15.93	6.40	5.79						
	Detailed E911 with Locator Capability (required with UEPEX port)																
		Unbundled Exchange Ports, 4-Wire ISDN DS1 Port - E911 Locator Capability - Initial Profile Establishment per CLEC per State			UEPEX	UEP1A	0.00	1,804.00		156.08							
		Unbundled Exchange Ports, 4-Wire ISDN DS1 Port - E911 Locator Capability - Subsequent Profile Changes, Additions, Deletions			UEPEX	UEP1B	0.00	175.14									
	New or Additional PRI Telephone Numbers																
		Unbundled Exchange Ports, 4-Wire ISDN DS1 Port - E911 Locator Capability 2-way Telephone Numbers, per number in E911 profile [New or Additional]			UEPEX	UEP1C	0.0697	0.49									
		Unbundled Exchange Ports, 4-Wire ISDN DS1 Port - E911 Locator Capability - Outdial Telephone Numbers, per number in E911 profile [New or Additional]			UEPEX	UEP1D	0.0697	11.51									
		Unbundled Exchange Ports, 4-Wire ISDN DS1 Port - Inward Telephone Numbers - Inward Data Only Option [New or Additional]			UEPDX	UEP1E	0.00	0.049									
		Exchange Ports - 4-Wire ISDN DS1 Port - Subsequent [New] Inward Tel Numbers [Customer Testing Purposes]			UEPEX	PR7ZT	0.00	23.02									
	LOCAL NUMBER PORTABILITY																
		Local Number Portability (1 per port)			UEPEX UEPDX	LNPCN	1.75										
	INTERFACE (Provsioning Only)																
		Voice/Data			UEPEX	PR71V	0.00	0.00	0.00								
		Digital Data			UEPEX	PR71D	0.00	0.00	0.00								
		Inward Data			UEPDX	PR71E	0.00	0.00	0.00								
	New or Additional Channel																
		New or Additional - Voice/Data "B" Channel			UEPEX	PR7BV	0.00	14.53									
		New or Additional - Digital Data "B" Channel			UEPEX	PR7BF	0.00	14.53									
		New or Additional Inward Data "B" Channel			UEPDX	PR7BD	0.00	14.53									
		New or Additional Useage Sensitive Voice Data "B" Channel			UEPEX	PR7BS	0.00	14.53									
		New or Additional Useage Sensitive Digital Data "B" Channel			UEPEX	PR7BU	0.00	14.53									
		New or Additional PRI "D" Channel			UEPEX	PR7EX	0.00	14.53									
	CALL TYPES																
		Inward			UEPEX UEPDX	PR7C1	0.00	0.00	0.00								
		Outward			UEPEX	PR7CO	0.00	0.00	0.00								
		Two-way			UEPEX	PR7CC	0.00	0.00	0.00								
	UNBUNDLED PORT with REMOTE CALL FORWARDING CAPABILITY																
	UNBUNDLED REMOTE CALL FORWARDING SERVICE - RESIDENCE																
		Unbundled Remote Call Forwarding Service, Area Calling, Res			UEPVR	UERAC	1.38	2.38	2.27	1.42	1.33						
		Unbundled Remote Call Forwarding Service, Local Calling - Res			UEPVR	UERLC	1.38	2.38	2.27	1.42	1.33						
		Unbundled Remote Call Forwarding Service, InterLATA - Res			UEPVR	UERTE	1.38	2.38	2.27	1.42	1.33						
		Unbundled Remote Call Forwarding Service, IntraLATA - Res			UEPVR	UERTR	1.38	2.38	2.27	1.42	1.33						
	Non-Recurring																
		Unbundled Remote Call Forwarding Service - Conversion - Switch-as-is			UEPVR	USAC2		0.10	0.10								
		Unbundled Remote Call Forwarding Service - Conversion with allowed change (PIC and LPIC)			UEPVR	USACC		0.10	0.10								
	UNBUNDLED REMOTE CALL FORWARDING - Bus																
		Unbundled Remote Call Forwarding Service, Area Calling - Bus			UEPVB	UERAC	1.38	2.38	2.27	1.42	1.33						
		Unbundled Remote Call Forwarding Service, Local Calling - Bus			UEPVB	UERLC	1.38	2.38	2.27	1.42	1.33						

UNBUNDLED NETWORK ELEMENTS - Alabama														Attachment: 2		Exhibit: A	
CATEGORY	RATE ELEMENTS	Interim	Zone	BCS	USOC	RATES ($)					Svc Order Submitted Elec per LSR	Svc Order Submitted Manually per LSR	Incremental Charge - Manual Svc Order vs. Electronic-1st	Incremental Charge - Manual Svc Order vs. Electronic-Add'l	Incremental Charge - Manual Svc Order vs. Electronic-Disc 1st	Incremental Charge - Manual Svc Order vs. Electronic-Disc Add'l
						Rec	Nonrecurring		Nonrecurring Disconnect		OSS Rates ($)					
							First	Add'l	First	Add'l	SOMEC	SOMAN	SOMAN	SOMAN	SOMAN	SOMAN
	Unbundled Remote Call Forwarding Service, InterLATA - Bus			UEPVB	UERTE	1.38	2.38	2.27	1.42	1.33						
	Unbundled Remote Call Forwarding Service, IntraLATA - Bus			UEPVB	UERTR	1.38	2.38	2.27	1.42	1.33						
	Unbundled Remote Call Forwarding Service Expanded and Exception Local Calling			UEPVB	UERVJ	1.38	2.38	2.27	1.42	1.33						
Non-Recurring																
	Unbundled Remote Call Forwarding Service - Conversion - Switch-as-is			UEPVB	USAC2		0.10	0.10								
	Unbundled Remote Call Forwarding Service - Conversion with allowed change (PIC and LPIC)			UEPVB	USACC		0.10	0.10								
UNBUNDLED LOCAL SWITCHING, PORT USAGE																
End Office Switching (Port Usage)																
	End Office Switching Function, Per MOU					0.0007025										
	End Office Trunk Port - Shared, Per MOU					0.0001638										
Tandem Switching (Port Usage) (Local or Access Tandem)																
	Tandem Switching Function Per MOU					0.000095										
	Tandem Trunk Port - Shared, Per MOU					0.0002015										
	Tandem Switching Function Per MOU (Melded)					0.000040993										
	Tandem Trunk Port - Shared, Per MOU (Melded)					0.000086947										
	Melded Factor: 43.15% of the Tandem Rate															
Common Transport																
	Common Transport - Per Mile, Per MOU					0.0000023										
	Common Transport - Facilities Termination Per MOU					0.0003224										
UNBUNDLED PORT/LOOP COMBINATIONS - COST BASED RATES																
Cost Based Rates are applied where BellSouth is required by FCC and/or State Commission rule to provide Unbundled Local Switching or Switch Ports.																
Features shall apply to the Unbundled Port/Loop Combination - Cost Based Rate section in the same manner as they are applied to the Stand-Alone Unbundled Port section of this Rate Exhibit.																
End Office and Tandem Switching Usage and Common Transport Usage rates in the Port section of this rate exhibit shall apply to all combinations of loop/port network elements except for UNE Coin Port/Loop Combinations.																
The first and additional Port nonrecurring charges apply to Not Currently Combined Combos. For Currently Combined Combos the nonrecurring charges shall be those identified in the Nonrecurring - Currently Combined sections.																
2-WIRE VOICE GRADE LOOP WITH 2-WIRE LINE PORT (RES)																
UNE Port/Loop Combination Rates																
	2-Wire VG Loop/Port Combo - Zone 1		1			12.70										
	2-Wire VG Loop/Port Combo - Zone 2		2			21.19										
	2-Wire VG Loop/Port Combo - Zone 3		3			34.80										
UNE Loop Rates																
	2-Wire Voice Grade Loop (SL1) - Zone 1		1	UEPRX	UEPLX	11.55										
	2-Wire Voice Grade Loop (SL1) - Zone 2		2	UEPRX	UEPLX	20.04										
	2-Wire Voice Grade Loop (SL1) - Zone 3		3	UEPRX	UEPLX	33.65										
2-Wire Voice Grade Line Port Rates (Res)																
	2-Wire voice unbundled port - residence			UEPRX	UEPRL	1.15	40.19	19.83	24.91	6.63						
	2-Wire voice unbundled port with Caller ID - res			UEPRX	UEPRC	1.15	40.19	19.83	24.91	6.63						
	2-Wire voice unbundled port outgoing only - res			UEPRX	UEPRO	1.15	40.19	19.83	24.91	6.63						
	2-Wire voice Grade unbundled Alabama extended local dialing parity port with Caller ID - res			UEPRX	UEPAR	1.15	40.19	19.83	24.91	6.63						
	2-Wire voice unbundles res, low usage line port with Caller ID (LUM)			UEPRX	UEPAP	1.15	40.19	19.83	24.91	6.63						
	2-Wire Voice Unbundled Alabama Residence Dialing Plan without Caller ID			UEPRX	UEPWA	1.15	40.19	19.83	24.91	6.63						
	2-Wire voice unbundled Low Usage Line Port without Caller ID Capability			UEPRX	UEPRT	1.15	40.19	19.83	24.91	6.63						
FEATURES																
	All Features Offered			UEPRX	UEPVF	1.98	0.00	0.00								
LOCAL NUMBER PORTABILITY																
	Local Number Portability (1 per port)			UEPRX	LNPCX	0.35										
NONRECURRING CHARGES (NRCs) - CURRENTLY COMBINED																
	2-Wire Voice Grade Loop / Line Port Combination - Conversion - Switch-as-is			UEPRX	USAC2		0.10	0.10								
	2-Wire Voice Grade Loop / Line Port Combination - Conversion - Switch with change			UEPRX	USACC		0.10	0.10								
ADDITIONAL NRCs																

UNBUNDLED NETWORK ELEMENTS - Alabama														Attachment: 2		Exhibit: A	
CATEGORY	RATE ELEMENTS	Interim	Zone	BCS	USOC	RATES ($)					Svc Order Submitted Elec per LSR	Svc Order Submitted Manually per LSR	Incremental Charge - Manual Svc Order vs. Electronic-1st	Incremental Charge - Manual Svc Order vs. Electronic-Add'l	Incremental Charge - Manual Svc Order vs. Electronic-Disc 1st	Incremental Charge - Manual Svc Order vs. Electronic-Disc Add'l
						Rec	Nonrecurring		Nonrecurring Disconnect		OSS Rates ($)					
							First	Add'l	First	Add'l	SOMEC	SOMAN	SOMAN	SOMAN	SOMAN	SOMAN
	2-Wire Voice Grade Loop/Line Port Combination - Subsequent Activity			UEPRX	USAS2	0.00	0.00	0.00								
	Unbundled Miscellaneous Rate Element, Tag Loop at End User Premise			UEPRX	URETL		8.33	0.83								
OFF/ON PREMISES EXTENSION CHANNELS																
	2 Wire Analog Voice Grade Extension Loop – Non-Design		1	UEPRX	UEAEN	12.58	37.81	17.56	23.49	5.30						
	2 Wire Analog Voice Grade Extension Loop – Non-Design		2	UEPRX	UEAEN	21.05	37.81	17.56	23.49	5.30						
	2 Wire Analog Voice Grade Extension Loop – Non-Design		3	UEPRX	UEAEN	34.34	37.81	17.56	23.49	5.30						
	2 Wire Analog Voice Grade Extension Loop – Design		1	UEPRX	UEAED	14.38	88.00	55.00	47.24	7.44						
	2 Wire Analog Voice Grade Extension Loop – Design		2	UEPRX	UEAED	22.85	88.00	55.00	47.24	7.44						
	2 Wire Analog Voice Grade Extension Loop – Design		3	UEPRX	UEAED	36.14	88.00	55.00	47.24	7.44						
INTEROFFICE TRANSPORT																
	Interoffice Transport - Dedicated - 2 Wire Voice Grade - Facility Termination			UEPRX	U1TV2	21.13	40.54	27.41	16.74	6.90						
	Interoffice Transport - Dedicated - 2 Wire Voice Grade - Per Mile or Fraction Mile			UEPRX	U1TVM	0.008838	0.00	0.00								
2-WIRE VOICE GRADE LOOP WITH 2-WIRE LINE PORT (BUS)																
UNE Port/Loop Combination Rates																
	2-Wire VG Loop/Port Combo - Zone 1		1			12.70										
	2-Wire VG Loop/Port Combo - Zone 2		2			21.19										
	2-Wire VG Loop/Port Combo - Zone 3		3			34.80										
UNE Loop Rates																
	2-Wire Voice Grade Loop (SL1) - Zone 1		1	UEPBX	UEPLX	11.55										
	2-Wire Voice Grade Loop (SL1) - Zone 2		2	UEPBX	UEPLX	20.04										
	2-Wire Voice Grade Loop (SL1) - Zone 3		3	UEPBX	UEPLX	33.65										
2-Wire Voice Grade Line Port (Bus)																
	2-Wire voice unbundled port without Caller ID - bus			UEPBX	UEPBL	1.15	40.19	19.83	24.91	6.63						
	2-Wire voice unbundled port with Caller + E484 ID - bus			UEPBX	UEPBC	1.15	40.19	19.83	24.91	6.63						
	2-Wire voice unbundled port outgoing only - bus			UEPBX	UEPBO	1.15	40.19	19.83	24.91	6.63						
	2-Wire voice Grade unbundled Alabama extended local dialing parity port with Caller ID - bus			UEPBX	UEPAW	1.15	40.19	19.83	24.91	6.63						
	2-Wire voice unbundled incoming only port with Caller ID - Bus			UEPBX	UEPB1	1.15	40.19	19.83	24.91	6.63						
	2-Wire Voice Unbundled Alabama Business Dialing Plan without Caller ID			UEPBX	UEPWB	1.15	40.19	19.83	24.91	6.63						
	2-Wire voice unbundled Incoming Only Port without Caller ID Capability			UEPBX	UEPBE	1.15	40.19	19.83	24.91	6.63						
LOCAL NUMBER PORTABILITY																
	Local Number Portability (1 per port)			UEPBX	LNPCX	0.35										
FEATURES																
	All Features Offered			UEPBX	UEPVF	1.98	0.00	0.00								
NONRECURRING CHARGES (NRCs) - CURRENTLY COMBINED																
	2-Wire Voice Grade Loop / Line Port Combination - Conversion - Switch-as-is			UEPBX	USAC2		0.10	0.10								
	2-Wire Voice Grade Loop / Line Port Combination - Conversion - Switch with change			UEPBX	USACC		0.10	0.10								
ADDITIONAL NRCs																
	2-Wire Voice Grade Loop/Line Port Combination - Subsequent Activity			UEPBX	USAS2		0.00	0.00								
	Unbundled Miscellaneous Rate Element, Tag Loop at End User Premise			UEPBX	URETL		8.33	0.83								
OFF/ON PREMISES EXTENSION CHANNELS																
	2 Wire Analog Voice Grade Extension Loop – Non-Design		1	UEPBX	UEAEN	12.58	37.81	17.56	23.49	5.30						
	2 Wire Analog Voice Grade Extension Loop – Non-Design		2	UEPBX	UEAEN	21.05	37.81	17.56	23.49	5.30						
	2 Wire Analog Voice Grade Extension Loop – Non-Design		3	UEPBX	UEAEN	34.34	37.81	17.56	23.49	5.30						
	2 Wire Analog Voice Grade Extension Loop – Design		1	UEPBX	UEAED	14.38	88.00	55.00	47.24	7.44						
	2 Wire Analog Voice Grade Extension Loop – Design		2	UEPBX	UEAED	22.85	88.00	55.00	47.24	7.44						
	2 Wire Analog Voice Grade Extension Loop – Design		3	UEPBX	UEAED	36.14	88.00	55.00	47.24	7.44						
INTEROFFICE TRANSPORT																

UNBUNDLED NETWORK ELEMENTS - Alabama														Attachment: 2		Exhibit: A	
CATEGORY	RATE ELEMENTS	Interim	Zone	BCS	USOC	RATES ($)					Svc Order Submitted Elec per LSR	Svc Order Submitted Manually per LSR	Incremental Charge - Manual Svc Order vs. Electronic-1st	Incremental Charge - Manual Svc Order vs. Electronic-Add'l	Incremental Charge - Manual Svc Order vs. Electronic-Disc 1st	Incremental Charge - Manual Svc Order vs. Electronic-Disc Add'l
						Rec	Nonrecurring		Nonrecurring Disconnect		OSS Rates ($)					
							First	Add'l	First	Add'l	SOMEC	SOMAN	SOMAN	SOMAN	SOMAN	SOMAN
	Interoffice Transport - Dedicated - 2 Wire Voice Grade - Facility Termination			UEPBX	U1TV2	21.13	40.54	27.41	16.74	6.90						
	Interoffice Transport - Dedicated - 2 Wire Voice Grade - Per Mile or Fraction Mile			UEPBX	U1TVM	0.008838	0.00	0.00								
2-WIRE VOICE GRADE LOOP WITH 2-WIRE LINE PORT (RES - PBX)																
UNE Port/Loop Combination Rates																
	2-Wire VG Loop/Port Combo - Zone 1		1			12.70										
	2-Wire VG Loop/Port Combo - Zone 2		2			21.19										
	2-Wire VG Loop/Port Combo - Zone 3		3			34.80										
UNE Loop Rates																
	2-Wire Voice Grade Loop (SL 1) - Zone 1		1	UEPRG	UEPLX	11.55										
	2-Wire Voice Grade Loop (SL 1) - Zone 2		2	UEPRG	UEPLX	20.04										
	2-Wire Voice Grade Loop (SL 1) - Zone 3		3	UEPRG	UEPLX	33.65										
2-Wire Voice Grade Line Port Rates (RES - PBX)																
	2-Wire VG Unbundled Combination 2-Way PBX Trunk Port - Res			UEPRG	UEPRD	1.15	69.08	32.41	37.43	6.20						
LOCAL NUMBER PORTABILITY																
	Local Number Portability (1 per port)			UEPRG	LNPCP	3.15	0.00	0.00								
FEATURES																
	All Features Offered			UEPRG	UEPVF	1.98	0.00	0.00								
NONRECURRING CHARGES (NRCs) - CURRENTLY COMBINED																
	2-Wire Voice Grade Loop/ Line Port Combination (PBX) - Conversion - Switch-As-Is			UEPRG	USAC2		7.91	1.90								
	2-Wire Voice Grade Loop/ Line Port Combination (PBX) - Conversion - Switch with Change			UEPRG	USACC		7.81	1.90								
ADDITIONAL NRCs																
	2-Wire Voice Grade Loop/ Line Port Combination (PBX) - Subsequent Activity			UEPRG	USAS2	0.00	0.00	0.00								
	PBX Subsequent Activity - Change/Rearrange Multiline Hunt Group						7.32	7.32								
	Unbundled Miscellaneous Rate Element, Tag Loop at End User Premise			UEPRG	URETL		8.33	0.83								
OFF/ON PREMISES EXTENSION CHANNELS																
	Local Channel Voice grade, per termination		1	UEPRG	P2JHX	14.38	88.00	55.00	47.24	7.44						
	Local Channel Voice grade, per termination		2	UEPRG	P2JHX	22.85	88.00	55.00	47.24	7.44						
	Local Channel Voice grade, per termination		3	UEPRG	P2JHX	36.14	88.00	55.00	47.24	7.44						
	Non-Wire Direct Serve Channel Voice Grade		1	UEPRG	SDD2X	22.41	131.60	61.92	90.50	13.40						
	Non-Wire Direct Serve Channel Voice Grade		2	UEPRG	SDD2X	23.88	131.60	61.92	90.50	13.40						
	Non-Wire Direct Serve Channel Voice Grade		3	UEPRG	SDD2X	33.72	131.60	61.92	90.50	13.40						
INTEROFFICE TRANSPORT																
	Interoffice Transport - Dedicated - 2 Wire Voice Grade - Facility Termination			UEPRG	U1TV2	21.13	40.54	27.41	16.74	6.90						
	Interoffice Transport - Dedicated - 2 Wire Voice Grade - Per Mile or Fraction Mile			UEPRG	U1TVM	0.008838	0.00	0.00								
2-WIRE VOICE GRADE LOOP WITH 2-WIRE LINE PORT (BUS - PBX)																
UNE Port/Loop Combination Rates																
	2-Wire VG Loop/Port Combo - Zone 1		1			12.70										
	2-Wire VG Loop/Port Combo - Zone 2		2			21.19										
	2-Wire VG Loop/Port Combo - Zone 3		3			34.80										
UNE Loop Rates																
	2-Wire Voice Grade Loop (SL 1) - Zone 1		1	UEPPX	UEPLX	11.55										
	2-Wire Voice Grade Loop (SL 1) - Zone 2		2	UEPPX	UEPLX	20.04										
	2-Wire Voice Grade Loop (SL 1) - Zone 3		3	UEPPX	UEPLX	33.65										
2-Wire Voice Grade Line Port Rates (BUS - PBX)																
	Line Side Unbundled Combination 2-Way PBX Trunk Port - Bus			UEPPX	UEPPC	1.15	69.08	32.41	37.43	6.20						
	Line Side Unbundled Outward PBX Trunk Port - Bus			UEPPX	UEPPO	1.15	69.08	32.41	37.43	6.20						
	Line Side Unbundled Incoming PBX Trunk Port - Bus			UEPPX	UEPP1	1.15	69.08	32.41	37.43	6.20						

UNBUNDLED NETWORK ELEMENTS - Alabama														Attachment: 2		Exhibit: A	
CATEGORY		RATE ELEMENTS	Interim	Zone	BCS	USOC	RATES ($)					Svc Order Submitted Elec per LSR	Svc Order Submitted Manually per LSR	Incremental Charge - Manual Svc Order vs. Electronic-1st	Incremental Charge - Manual Svc Order vs. Electronic-Add'l	Incremental Charge - Manual Svc Order vs. Electronic-Disc 1st	Incremental Charge - Manual Svc Order vs. Electronic-Disc Add'l
							Rec	Nonrecurring		Nonrecurring Disconnect		OSS Rates ($)					
								First	Add'l	First	Add'l	SOMEC	SOMAN	SOMAN	SOMAN	SOMAN	SOMAN
		2-Wire Voice Unbundled 2-Way Combination PBX Alabama Calling Port			UEPPX	UEPA2	1.15	69.08	32.41	37.43	6.20						
		2-Wire Voice Unbundled PBX LD Terminal Ports			UEPPX	UEPLD	1.15	69.08	32.41	37.43	6.20						
		2-Wire Voice Unbundled 2-Way Combination PBX Usage Port			UEPPX	UEPXA	1.15	69.08	32.41	37.43	6.20						
		2-Wire Voice Unbundled PBX Toll Terminal Hotel Ports			UEPPX	UEPXB	1.15	69.08	32.41	37.43	6.20						
		2-Wire Voice Unbundled PBX LD DDD Terminals Port			UEPPX	UEPXC	1.15	69.08	32.41	37.43	6.20						
		2-Wire Voice Unbundled PBX LD Terminal Switchboard Port			UEPPX	UEPXD	1.15	69.08	32.41	37.43	6.20						
		2-Wire Voice Unbundled PBX LD Terminal Switchboard IDD Capable Port			UEPPX	UEPXE	1.15	69.08	32.41	37.43	6.20						
		2-Wire Voice Unbundled 2-Way PBX Hotel/Hospital Economy Administrative Calling Port			UEPPX	UEPXL	1.15	69.08	32.41	37.43	6.20						
		2-Wire Voice Unbundled 2-Way PBX Hotel/Hospital Economy Room Calling Port			UEPPX	UEPXM	1.15	69.08	32.41	37.43	6.20						
		2-Wire Voice Unbundled 1-Way Outgoing PBX Hotel/Hospital Discount Room Calling Port			UEPPX	UEPXO	1.15	69.08	32.41	37.43	6.20						
		2-Wire Voice Unbundled 1-Way Outgoing PBX Measured Port			UEPPX	UEPXS	1.15	69.08	32.41	37.43	6.20						
	LOCAL NUMBER PORTABILITY																
		Local Number Portability (1 per port)			UEPPX	LNPCP	3.15	0.00	0.00								
	FEATURES																
		All Features Offered			UEPPX	UEPVF	1.98	0.00	0.00								
	NONRECURRING CHARGES (NRCs) - CURRENTLY COMBINED																
		2-Wire Voice Grade Loop/ Line Port Combination (PBX) - Conversion - Switch-As-Is			UEPPX	USAC2		7.91	1.90								
		2-Wire Voice Grade Loop/ Line Port Combination (PBX) - Conversion - Switch with Change			UEPPX	USACC		7.91	1.90								
	ADDITIONAL NRCs																
		2-Wire Voice Grade Loop/ Line Port Combination (PBX) - Subsequent Activity			UEPPX	USAS2	0.00	0.00	0.00								
		PBX Subsequent Activity - Change/Rearrange Multiline Hunt Group						7.32	7.32								
		Unbundled Miscellaneous Rate Element, Tag Loop at End User Premise			UEPPX	URETL		8.33	0.83								
	OFF/ON PREMISES EXTENSION CHANNELS																
		Local Channel Voice grade, per termination		1	UEPPX	P2JHX	14.38	88.00	55.00	47.24	7.44						
		Local Channel Voice grade, per termination		2	UEPPX	P2JHX	22.85	88.00	55.00	47.24	7.44						
		Local Channel Voice grade, per termination		3	UEPPX	P2JHX	36.14	88.00	55.00	47.24	7.44						
		Non-Wire Direct Serve Channel Voice Grade		1	UEPPX	SDD2X	22.41	131.60	61.92	90.50	13.40						
		Non-Wire Direct Serve Channel Voice Grade		2	UEPPX	SDD2X	23.88	131.60	61.92	90.50	13.40						
		Non-Wire Direct Serve Channel Voice Grade		3	UEPPX	SDD2X	33.72	131.60	61.92	90.50	13.40						
	INTEROFFICE TRANSPORT																
		Interoffice Transport - Dedicated - 2 Wire Voice Grade - Facility Termination			UEPPX	U1TV2	21.13	40.54	27.41	16.74	6.90						
		Interoffice Transport - Dedicated - 2 Wire Voice Grade - Per Mile or Fraction Mile			UEPPX	U1TVM	0.008838	0.00	0.00								
	2-WIRE VOICE GRADE LOOP WITH 2-WIRE ANALOG LINE COIN PORT																
	UNE Port/Loop Combination Rates																
		2-Wire VG Coin Port/Loop Combo – Zone 1		1			12.70										
		2-Wire VG Coin Port/Loop Combo – Zone 2		2			21.19										
		2-Wire VG Coin Port/Loop Combo – Zone 3		3			34.80										
	UNE Loop Rates																
		2-Wire Voice Grade Loop (SL1) - Zone 1		1	UEPCO	UEPLX	11.55										
		2-Wire Voice Grade Loop (SL1) - Zone 2		2	UEPCO	UEPLX	20.04										
		2-Wire Voice Grade Loop (SL1) - Zone 3		3	UEPCO	UEPLX	33.65										
	2-Wire Voice Grade Line Ports (COIN)																
		2-Wire Coin 2-Way without Operator Screening and without Blocking (AL, KY, LA, MS)			UEPCO	UEPRF	1.15	40.19	19.83	24.91	6.63						
		2-Wire Coin 2-Way with Operator Screening (AL, KY)			UEPCO	UEPRE	1.15	40.19	19.83	24.91	6.63						
		2-Wire Coin 2-Way with Operator Screening and Blocking: 011, 900/976, 1+DDD (AL, KY, LA, MS)			UEPCO	UEPRA	1.15	40.19	19.83	24.91	6.63						

UNBUNDLED NETWORK ELEMENTS - Alabama														Attachment: 2		Exhibit: A	
CATEGORY	RATE ELEMENTS	Interim	Zone	BCS	USOC	RATES ($)					Svc Order Submitted Elec per LSR	Svc Order Submitted Manually per LSR	Incremental Charge - Manual Svc Order vs. Electronic-1st	Incremental Charge - Manual Svc Order vs. Electronic-Add'l	Incremental Charge - Manual Svc Order vs. Electronic-Disc 1st	Incremental Charge - Manual Svc Order vs. Electronic-Disc Add'l
						Rec	Nonrecurring		Nonrecurring Disconnect		OSS Rates ($)					
							First	Add'l	First	Add'l	SOMEC	SOMAN	SOMAN	SOMAN	SOMAN	SOMAN
	2-Wire Coin 2-Way with Operator Screening and 011 Blocking (AL, LA, MS)			UEPCO	UEPRB	1.15	40.19	19.83	24.91	6.63						
	2-Wire Coin 2-Way with Operator Screening & Blocking: 900/976, 1+DDD, 011+, & Local (AL, KY, LA, MS)			UEPCO	UEPCD	1.15	40.19	19.83	24.91	6.63						
	2-Wire Coin Outward with Operator Screening and 011 Blocking (AL, FL)			UEPCO	UEPRK	1.15	40.19	19.83	24.91	6.63						
	2-Wire Coin Outward with Operator Screening and Blocking: 011, 900/976, 1+DDD (AL, KY, LA, MS)			UEPCO	UEPRH	1.15	40.19	19.83	24.91	6.63						
	2-Wire Coin Outward Operator Screening & Blocking: 900/976, 1+DDD, 011+, and Local (AL, KY, LA, MS)			UEPCO	UEPCN	1.15	40.19	19.83	24.91	6.63						
	2-Wire 2-Way Smartline with 900/976 (all states except LA)			UEPCO	UEPCK	1.15	40.19	19.83	24.91	6.63						
	2-Wire Coin Outward Smartline with 900/976 (all states except LA)			UEPCO	UEPCR	1.15	40.19	19.83	24.91	6.63						
ADDITIONAL UNE COIN PORT/LOOP (RC)																
	UNE Coin Port/Loop Combo Usage (Flat Rate)			UEPCO	URECU	1.56	0.00	0.00	0.00	0.00						
LOCAL NUMBER PORTABILITY																
	Local Number Portability (1 per port)			UEPCO	LNPCX	0.35										
NONRECURRING CHARGES - CURRENTLY COMBINED																
	2-Wire Voice Grade Loop / Line Port Combination - Conversion - Switch-as-is			UEPCO	USAC2		0.10	0.10								
	2-Wire Voice Grade Loop / Line Port Combination - Conversion - Switch with change			UEPCO	USACC		0.10	0.10								
ADDITIONAL NRCs																
	2-Wire Voice Grade Loop/Line Port Combination - Subsequent Activity			UEPCO	USAS2		0.00	0.00								
	Unbundled Miscellaneous Rate Element, Tag Loop at End User Premise			UEPCO	URETL		8.33	0.83								
2-WIRE VOICE LOOP/ 2WIRE VOICE GRADE IO TRANSPORT/ 2-WIRE LINE PORT (RES)																
UNE Port/Loop Combination Rates																
	2-Wire VG Loop/IO Tranport/Port Combo - Zone 1		1			15.76										
	2-Wire VG Loop/IO Tranport/Port Combo - Zone 2		2			24.23										
	2-Wire VG Loop/IO Tranport/Port Combo - Zone 3		3			37.52										
UNE Loop Rates																
	2-Wire Voice Grade Loop (SL2) - Zone 1		1	UEPFR	UECF2	14.38										
	2-Wire Voice Grade Loop (SL2) - Zone 2		2	UEPFR	UECF2	22.85										
	2-Wire Voice Grade Loop (SL2) - Zone 3		3	UEPFR	UECF2	36.14										
2-Wire Voice Grade Line Port Rates (Res)																
	2-Wire voice unbundled port - residence			UEPFR	UEPRL	1.38	90.38	57.27	48.66	8.77						
	2-Wire voice unbundled port with Caller ID - res			UEPFR	UEPRC	1.38	90.38	57.27	48.66	8.77						
	2-Wire voice unbundled port outgoing only - res			UEPFR	UEPRO	1.38	90.38	57.27	48.66	8.77						
	2-Wire voice Grade unbundled Alabama extended local dialing parity port with Caller ID - res			UEPFR	UEPAR	1.38	90.38	57.27	48.66	8.77						
	2-Wire voice unbundles res, low usage line port with Caller ID (LUM)			UEPFR	UEPAP	1.38	90.38	57.27	48.66	8.77						
	2-Wire Voice Unbundled Alabama Residence Dialing Plan without Caller ID			UEPFR	UEPWA	1.38	90.38	57.27	48.66	8.77						
INTEROFFICE TRANSPORT																
	Interoffice Transport - Dedicated - 2 Wire Voice Grade - Facility Termination			UEPFR	U1TV2	21.13	40.54	27.41	16.74	6.90						
	Interoffice Transport - Dedicated - 2 Wire Voice Grade - Per Mile or Fraction Mile			UEPFR	1L5XX	0.008838										
FEATURES																
	All Features Offered			UEPFR	UEPVF	1.98	0.00	0.00								
LOCAL NUMBER PORTABILITY																
	Local Number Portability (1 per port)			UEPFR	LNPCX	0.35										
NONRECURRING CHARGES (NRCs) - CURRENTLY COMBINED																
	2-Wire Loop / Dedicated IO Transport / 2 Wire Line Port Combination - Conversion - Switch-as-is			UEPFR	USAC2		8.48	1.87								

UNBUNDLED NETWORK ELEMENTS - Alabama														Attachment: 2		Exhibit: A	
CATEGORY	RATE ELEMENTS	Interim	Zone	BCS	USOC	RATES ($)					Svc Order Submitted Elec per LSR	Svc Order Submitted Manually per LSR	Incremental Charge - Manual Svc Order vs. Electronic-1st	Incremental Charge - Manual Svc Order vs. Electronic-Add'l	Incremental Charge - Manual Svc Order vs. Electronic-Disc 1st	Incremental Charge - Manual Svc Order vs. Electronic-Disc Add'l
						Rec	Nonrecurring		Nonrecurring Disconnect		OSS Rates ($)					
							First	Add'l	First	Add'l	SOMEC	SOMAN	SOMAN	SOMAN	SOMAN	SOMAN
	2-Wire Loop / Dedicated IO Transport / 2 Wire Line Port Combination - Conversion - Switch-With-Change			UEPFR	USACC		8.48	1.87								
	Unbundled Miscellaneous Rate Element, Tag Designed Loop at End User Premise			UEPFR	URETN		11.21	1.10								
2-WIRE VOICE LOOP/ 2WIRE VOICE GRADE IO TRANSPORT/ 2-WIRE LINE PORT (BUS)																
UNE Port/Loop Combination Rates																
	2-Wire VG Loop/IO Tranport/Port Combo - Zone 1		1			15.76										
	2-Wire VG Loop/IO Tranport/Port Combo - Zone 2		2			24.23										
	2-Wire VG Loop/IO Tranport/Port Combo - Zone 3		3			37.52										
UNE Loop Rates																
	2-Wire Voice Grade Loop (SL2) - Zone 1		1	UEPFB	UECF2	14.38										
	2-Wire Voice Grade Loop (SL2) - Zone 2		2	UEPFB	UECF2	22.85										
	2-Wire Voice Grade Loop (SL2) - Zone 3		3	UEPFB	UECF2	36.14										
2-Wire Voice Grade Line Port (Bus)																
	2-Wire voice unbundled port without Caller ID - bus			UEPFB	UEPBL	1.38	90.38	57.27	48.66	8.77						
	2-Wire voice unbundled port with Caller + E484 ID - bus			UEPFB	UEPBC	1.38	90.38	57.27	48.66	8.77						
	2-Wire voice unbundled port outgoing only - bus			UEPFB	UEPBO	1.38	90.38	57.27	48.66	8.77						
	2-Wire voice Grade unbundled Alabama extended local dialing parity port with Caller ID - bus			UEPFB	UEPAW	1.38	90.38	57.27	48.66	8.77						
	2-Wire voice unbundled incoming only port with Caller ID - Bus			UEPFB	UEPB1	1.38	90.38	57.27	48.66	8.77						
	2-Wire Voice Unbundled Alabama Business Dialing Plan without Caller ID			UEPFB	UEPWB	1.38	90.38	57.27	48.66	8.77						
LOCAL NUMBER PORTABILITY																
	Local Number Portability (1 per port)			UEPFB	LNPCX	0.35										
INTEROFFICE TRANSPORT																
	Interoffice Transport - Dedicated - 2 Wire Voice Grade - Facility Termination			UEPFB	U1TV2	21.13	40.54	27.41	16.74	6.90						
	Interoffice Transport - Dedicated - 2 Wire Voice Grade - Per Mile or Fraction Mile			UEPFB	1L5XX	0.008838										
FEATURES																
	All Features Offered			UEPFB	UEPVF	1.98	0.00	0.00								
NONRECURRING CHARGES (NRCs) - CURRENTLY COMBINED																
	2-Wire Loop / Dedicated IO Transport / 2 Wire Line Port Combination - Conversion - Switch-as-is			UEPFB	USAC2		8.48	1.87								
	2-Wire Loop / Dedicated IO Transport / 2 Wire Line Port Combination - Conversion - Switch with change			UEPFB	USACC		8.48	1.87								
	Unbundled Miscellaneous Rate Element, Tag Designed Loop at End User Premise			UEPFB	URETN		11.21	1.10								
2-WIRE VOICE LOOP/ 2WIRE VOICE GRADE IO TRANSPORT/ 2-WIRE LINE PORT (PBX)																
UNE Port/Loop Combination Rates																
	2-Wire VG Loop/IO Tranport/Port Combo - Zone 1		1			15.76										
	2-Wire VG Loop/IO Tranport/Port Combo - Zone 2		2			24.23										
	2-Wire VG Loop/IO Tranport/Port Combo - Zone 3		3			37.52										
UNE Loop Rates																
	2-Wire Voice Grade Loop (SL2) - Zone 1		1	UEPFP	UECF2	14.38										
	2-Wire Voice Grade Loop (SL2) - Zone 2		2	UEPFP	UECF2	22.85										
	2-Wire Voice Grade Loop (SL2) - Zone 3		3	UEPFP	UECF2	36.14										
2-Wire Voice Grade Line Port Rates (BUS - PBX)																
	Line Side Unbundled Combination 2-Way PBX Trunk Port - Bus			UEPFP	UEPPC	1.38	119.27	69.85	61.18	8.34						
	Line Side Unbundled Outward PBX Trunk Port - Bus			UEPFP	UEPPO	1.38	119.27	69.85	61.18	8.34						
	Line Side Unbundled Incoming PBX Trunk Port - Bus			UEPFP	UEPP1	1.38	119.27	69.85	61.18	8.34						
	2-Wire Voice Unbundled 2-Way Combination PBX Alabama Calling Port			UEPFP	UEPA2	1.38	119.27	69.85	61.18	8.34						
	2-Wire Voice Unbundled PBX LD Terminal Ports			UEPFP	UEPLD	1.38	119.27	69.85	61.18	8.34						
	2-Wire Voice Unbundled 2-Way Combination PBX Usage Port			UEPFP	UEPXA	1.38	119.27	69.85	61.18	8.34						
	2-Wire Voice Unbundled PBX Toll Terminal Hotel Ports			UEPFP	UEPXB	1.38	119.27	69.85	61.18	8.34						
	2-Wire Voice Unbundled PBX LD DDD Terminals Port			UEPFP	UEPXC	1.38	119.27	69.85	61.18	8.34						
	2-Wire Voice Unbundled PBX LD Terminal Switchboard Port			UEPFP	UEPXD	1.38	119.27	69.85	61.18	8.34						

UNBUNDLED NETWORK ELEMENTS - Alabama														Attachment: 2		Exhibit: A	
CATEGORY	RATE ELEMENTS	Interim	Zone	BCS	USOC	RATES ($)					Svc Order Submitted Elec per LSR	Svc Order Submitted Manually per LSR	Incremental Charge - Manual Svc Order vs. Electronic-1st	Incremental Charge - Manual Svc Order vs. Electronic-Add'l	Incremental Charge - Manual Svc Order vs. Electronic-Disc 1st	Incremental Charge - Manual Svc Order vs. Electronic-Disc Add'l
						Rec	Nonrecurring		Nonrecurring Disconnect		OSS Rates ($)					
							First	Add'l	First	Add'l	SOMEC	SOMAN	SOMAN	SOMAN	SOMAN	SOMAN
	2-Wire Voice Unbundled PBX LD Terminal Switchboard IDD Capable Port			UEPFP	UEPXE	1.38	119.27	69.85	61.18	8.34						
	2-Wire Voice Unbundled 2-Way PBX Hotel/Hospital Economy Administrative Calling Port			UEPFP	UEPXL	1.38	119.27	69.85	61.18	8.34						
	2-Wire Voice Unbundled 2-Way PBX Hotel/Hospital Economy Room Calling Port			UEPFP	UEPXM	1.38	119.27	69.85	61.18	8.34						
	2-Wire Voice Unbundled 1-Way Outgoing PBX Hotel/Hospital Discount Room Calling Port			UEPFP	UEPXO	1.38	119.27	69.85	61.18	8.34						
	2-Wire Voice Unbundled 1-Way Outgoing PBX Measured Port			UEPFP	UEPXS	1.38	119.27	69.85	61.18	8.34						
LOCAL NUMBER PORTABILITY																
	Local Number Portability (1 per port)			UEPFP	LNPCP	3.15	0.00	0.00								
INTEROFFICE TRANSPORT																
	Interoffice Transport - Dedicated - 2 Wire Voice Grade - Facility Termination			UEPFP	U1TV2	21.13	40.54	27.41	16.74	6.90						
	Interoffice Transport - Dedicated - 2 Wire Voice Grade - Per Mile or Fraction Mile			UEPFP	1L5XX	0.008838										
FEATURES																
	All Features Offered			UEPFP	UEPVF	1.98	0.00	0.00								
NONRECURRING CHARGES (NRCs) - CURRENTLY COMBINED																
	2-Wire Loop / Dedicated IO Transport / 2 Wire Line Port Combination - Conversion - Switch-as-is			UEPFP	USAC2		8.48	1.87								
	2-Wire Loop / Dedicated IO Transport / 2 Wire Line Port Combination - Conversion - Switch with change			UEPFP	USACC		8.48	1.87								
	Unbundled Miscellaneous Rate Element, Tag Designed Loop at End User Premise			UEPFP	URETN		11.21	1.10								
UNBUNDLED PORT/LOOP COMBINATIONS - COST BASED RATES																
2-WIRE VOICE GRADE LOOP- BUS ONLY - WITH 2-WIRE DID TRUNK PORT																
UNE Port/Loop Combination Rates																
	2-Wire VG Loop/2-Wire DID Trunk Port Combo - UNE Zone 1		1			22.40										
	2-Wire VG Loop/2-Wire DID Trunk Port Combo - UNE Zone 2		2			30.88										
	2-Wire VG Loop/2-Wire DID Trunk Port Combo - UNE Zone 3		3			44.17										
UNE Loop Rates																
	2-Wire Analog Voice Grade Loop - (SL2) - UNE Zone 1		1	UEPPX	UECD1	14.38										
	2-Wire Analog Voice Grade Loop - (SL2) - UNE Zone 2		2	UEPPX	UECD1	22.85										
	2-Wire Analog Voice Grade Loop - (SL2) - UNE Zone 3		3	UEPPX	UECD1	36.14										
UNE Port Rate																
	Exchange Ports - 2-Wire DID Port			UEPPX	UEPD1	8.02	207.31	73.74	107.14	11.20						
NONRECURRING CHARGES - CURRENTLY COMBINED																
	2-Wire Voice Grade Loop / 2-Wire DID Trunk Port Combination - Switch-as-is			UEPPX	USAC1		7.31	1.87								
	2-Wire Voice Grade Loop / 2-Wire DID Trunk Port Conversion with BellSouth Allowable Changes			UEPPX	USA1C		7.31	1.87								
ADDITIONAL NRCs																
	2-Wire DID Subsequent Activity - Add Trunks, Per Trunk			UEPPX	USAS1		26.78	26.78								
	Unbundled Miscellaneous Rate Element, Tag Designed Loop at End User Premise			UEPPX	URETN		11.21	1.10								
Telephone Number/Trunk Group Establisment Charges																
	DID Trunk Termination (One Per Port)			UEPPX	NDT	0.00	0.00	0.00								
	Additional DID Numbers for each Group of 20 DID Numbers			UEPPX	ND4	0.00	0.00	0.00								
	DID Numbers, Non- consecutive DID Numbers , Per Number			UEPPX	ND5	0.00	0.00	0.00								
	Reserve Non-Consecutive DID numbers			UEPPX	ND6	0.00	0.00	0.00								
	Reserve DID Numbers			UEPPX	NDV	0.00	0.00	0.00								
LOCAL NUMBER PORTABILITY																
	Local Number Portability (1 per port)			UEPPX	LNPCP	3.15	0.00	0.00								
2-WIRE ISDN DIGITAL GRADE LOOP WITH 2-WIRE ISDN DIGITAL LINE SIDE PORT																
UNE Port/Loop Combination Rates																
	2W ISDN Digital Grade Loop/2W ISDN Digital Line Side Port - UNE Zone 1		1	UEPPB UEPPR		27.28										

UNBUNDLED NETWORK ELEMENTS - Alabama														Attachment: 2		Exhibit: A	
CATEGORY	RATE ELEMENTS	Interim	Zone	BCS		USOC	RATES ($)					Svc Order Submitted Elec per LSR	Svc Order Submitted Manually per LSR	Incremental Charge - Manual Svc Order vs. Electronic-1st	Incremental Charge - Manual Svc Order vs. Electronic-Add'l	Incremental Charge - Manual Svc Order vs. Electronic-Disc 1st	Incremental Charge - Manual Svc Order vs. Electronic-Disc Add'l
							Rec	Nonrecurring		Nonrecurring Disconnect		OSS Rates ($)					
								First	Add'l	First	Add'l	SOMEC	SOMAN	SOMAN	SOMAN	SOMAN	SOMAN
	2W ISDN Digital Grade Loop/2W ISDN Digital Line Side Port - UNE Zone 2		2	UEPPB	UEPPR		37.86										
	2W ISDN Digital Grade Loop/2W ISDN Digital Line Side Port - UNE Zone 3		3	UEPPB	UEPPR		53.84										
UNE Loop Rates																	
	2-Wire ISDN Digital Grade Loop - UNE Zone 1		1	UEPPB	UEPPR	USL2X	19.03										
	2-Wire ISDN Digital Grade Loop - UNE Zone 2		2	UEPPB	UEPPR	USL2X	29.62										
	2-Wire ISDN Digital Grade Loop - UNE Zone 3		3	UEPPB	UEPPR	USL2X	45.60										
UNE Port Rate																	
	Exchange Port - 2-Wire ISDN Line Side Port			UEPPB	UEPPR	UEPPB	8.24	190.01	132.76	100.67	21.28						
NONRECURRING CHARGES - CURRENTLY COMBINED																	
	2-Wire ISDN Digital Grade Loop / 2-Wire ISDN Line Side Port Combination - Conversion			UEPPB	UEPPR	USACB	0.00	38.51	27.02								
ADDITIONAL NRCs																	
	Unbundled Miscellaneous Rate Element, Tag Designed Loop at End User Premise			UEPPB	UEPPR	URETN		11.21	1.10								
	Unbundled Miscellaneous Rate Element, Tag Loop at End User Premise			UEPPB	UEPPR	URETL		8.33	0.83								
LOCAL NUMBER PORTABILITY																	
	Local Number Portability (1 per port)			UEPPB	UEPPR	LNPCX	0.35	0.00	0.00								
B-CHANNEL USER PROFILE ACCESS:																	
	CVS/CSD (DMS/5ESS)			UEPPB	UEPPR	U1UCA	0.00	0.00	0.00								
	CVS (EWSD)			UEPPB	UEPPR	U1UCB	0.00	0.00	0.00								
	CSD			UEPPB	UEPPR	U1UCC	0.00	0.00	0.00								
B-CHANNEL AREA PLUS USER PROFILE ACCESS: (AL,KY,LA,MS SC,MS, & TN)																	
	CVS/CSD (DMS/5ESS)			UEPPB	UEPPR	U1UCD	0.00	0.00	0.00								
	CVS (EWSD)			UEPPB	UEPPR	U1UCE	0.00	0.00	0.00								
	CSD			UEPPB	UEPPR	U1UCF	0.00	0.00	0.00								
USER TERMINAL PROFILE																	
	User Terminal Profile (EWSD only)			UEPPB	UEPPR	U1UMA	0.00	0.00	0.00								
VERTICAL FEATURES																	
	All Vertical Features - One per Channel B User Profile			UEPPB	UEPPR	UEPVF	1.98	0.00	0.00								
INTEROFFICE CHANNEL MILEAGE																	
	Interoffice Channel mileage each, including first mile and facilities termination			UEPPB	UEPPR	M1GNC	21.13	40.54	27.41	16.74	6.90						
	Interoffice Channel mileage each, additional mile			UEPPB	UEPPR	M1GNM	0.008838	0.00	0.00								
4-WIRE DS1 DIGITAL LOOP WITH 4-WIRE ISDN DS1 DIGITAL TRUNK PORT																	
The UNE-P DS1 combination rates below for 4-Wire DS1 Digital Loop with 4-Wire ISDN DS1 Digital Trunk Port in this rate exhibit apply to the embedded base in place as of 10/2/03 until 4/1/04. After 4/1/04 these rates shall revert to tariff rates or a separate agreement.																	
Requests for 4-Wire DS1 Digital Loop with 4-Wire ISDN DS1 Digital Trunk Port after the effective date of this amendment shall be provided pursuant to a separate agreement or tariff at BellSouth's discretion.																	
UNE Port/Loop Combination Rates																	
	4W DS1 Digital Loop/4W ISDN DS1 Digital Trunk Port - UNE Zone 1		1	UEPPP			166.87										
	4W DS1 Digital Loop/4W ISDN DS1 Digital Trunk Port - UNE Zone 2		2	UEPPP			238.50										
	4W DS1 Digital Loop/4W ISDN DS1 Digital Trunk Port - UNE Zone 3		3	UEPPP			398.85										
UNE Loop Rates																	
	4-Wire DS1 Digital Loop - UNE Zone 1		1	UEPPP		USL4P	82.55										
	4-Wire DS1 Digital Loop - UNE Zone 2		2	UEPPP		USL4P	154.18										
	4-Wire DS1 Digital Loop - UNE Zone 3		3	UEPPP		USL4P	314.52										
UNE Port Rate																	
	Exchange Ports - 4-Wire ISDN DS1 Port (E:4/1/2004)			UEPPP		UEPPP	84.32	456.28	259.10	123.88	31.77						
NONRECURRING CHARGES - CURRENTLY COMBINED																	
	4-Wire DS1 Digital Loop / 4-Wire ISDN DS1 Digital Trunk Port Combination - Conversion -Switch-as-is (E:4/1/2004)			UEPPP		USACP	0.00	119.07	78.56								
ADDITIONAL NRCs																	

UNBUNDLED NETWORK ELEMENTS - Alabama													Attachment: 2		Exhibit: A	
CATEGORY	RATE ELEMENTS	Interim	Zone	BCS	USOC	RATES ($)					Svc Order Submitted Elec per LSR	Svc Order Submitted Manually per LSR	Incremental Charge - Manual Svc Order vs. Electronic-1st	Incremental Charge - Manual Svc Order vs. Electronic-Add'l	Incremental Charge - Manual Svc Order vs. Electronic-Disc 1st	Incremental Charge - Manual Svc Order vs. Electronic-Disc Add'l
						Rec	Nonrecurring		Nonrecurring Disconnect		OSS Rates ($)					
							First	Add'l	First	Add'l	SOMEC	SOMAN	SOMAN	SOMAN	SOMAN	SOMAN
	4-Wire DS1 Loop/4-W ISDN Digtl Trk Port - Subsqt Actvy-Inward/two way Tel Nos. (except NC)			UEPPP	PR7TF		0.49									
	4-Wire DS1 Loop / 4-Wire ISDN DS1 Digital Trunk Port - Outward Tel Numbers (All States except NC)			UEPPP	PR7TO		11.51									
	4-Wire DS1 Loop / 4-Wire ISDN DS1 Digital Trk Port - Subsequent Inward Tel Numbers			UEPPP	PR7ZT		23.02									
LOCAL NUMBER PORTABILITY																
	Local Number Portability (1 per port)			UEPPP	LNPCN	1.75										
INTERFACE (Provsioning Only)																
	Voice/Data			UEPPP	PR71V	0.00	0.00	0.00								
	Digital Data			UEPPP	PR71D	0.00	0.00	0.00								
	Inward Data			UEPPP	PR71E	0.00	0.00	0.00								
New or Additional "B" Channel																
	New or Additional - Voice/Data B Channel			UEPPP	PR7BV	0.00	14.53									
	New or Additional - Digital Data B Channel			UEPPP	PR7BF	0.00	14.53									
	New or Additional Inward Data B Channel			UEPPP	PR7BD	0.00	14.53									
CALL TYPES																
	Inward			UEPPP	PR7C1	0.00	0.00	0.00								
	Outward			UEPPP	PR7CO	0.00	0.00	0.00								
	Two-way			UEPPP	PR7CC	0.00	0.00	0.00								
Interoffice Channel Mileage																
	Fixed Each Including First Mile			UEPPP	1LN1A	60.34	89.27	81.81	16.35	14.44						
	Each Airline-Fractional Additional Mile			UEPPP	1LN1B	0.18										
4-WIRE DS1 DIGITAL LOOP WITH 4-WIRE DDITS TRUNK PORT																
The UNE-P DS1 combination rates below for 4-Wire DS1 Digital Loop with 4-Wire DDITS Trunk Port in this rate exhibit apply to the embedded base in place as of 10/2/03 until 4/1/04. After 4/1/04 these rates shall revert to tariff rates or a separate agreement.																
Requests for 4-Wire DS1 Digital Loop with 4-Wire DDITS after the effective date of this amendment shall be provided pursuant to a separate agreement or tariff at BellSouth's discretion.																
UNE Port/Loop Combination Rates																
	4W DS1 Digital Loop/4W DDITS Trunk Port - UNE Zone 1		1	UEPDC		142.64										
	4W DS1 Digital Loop/4W DDITS Trunk Port - UNE Zone 2		2	UEPDC		214.26										
	4W DS1 Digital Loop/4W DDITS Trunk Port - UNE Zone 3		3	UEPDC		374.61										
UNE Loop Rates																
	4-Wire DS1 Digital Loop - UNE Zone 1		1	UEPDC	USLDC	82.55										
	4-Wire DS1 Digital Loop - UNE Zone 2		2	UEPDC	USLDC	154.18										
	4-Wire DS1 Digital Loop - UNE Zone 3		3	UEPDC	USLDC	314.52										
UNE Port Rate																
	4-Wire DDITS Digital Trunk Port (E:4/1/2004)			UEPDC	UDD1T	60.09	454.49	253.23	117.29	14.17						
NONRECURRING CHARGES - CURRENTLY COMBINED																
	4-Wire DS1 Digital Loop / 4-Wire DDITS Trunk Port Combination - Switch-as-is (E:4/1/2004)			UEPDC	USAC4		129.49	67.02								
	4-Wire DS1 Digital Loop / 4-Wire DDITS Trunk Port Combination - Conversion with DS1 Changes (E:4/1/2004)			UEPDC	USAWA		129.49	67.02								
	4-Wire DS1 Digital Loop / 4-Wire DDITS Trunk Port Combination - Conversion with Change - Trunk (E:4/1/2004)			UEPDC	USAWB		129.49	67.02								
ADDITIONAL NRCs																
	4-Wire DS1 Loop / 4-Wire DDITS Trunk Port - NRC - Subsequent Channel Activation/Chan - 2-Way Trunk			UEPDC	UDTTA		14.48	14.48								
	4-Wire DS1 Loop / 4-Wire DDITS Trunk Port - Subsequent Channel Activation/Chan - 1-Way Outward Trunk			UEPDC	UDTTB		14.48	14.48								
	4-Wire DS1 Loop / 4-Wire DDITS Trunk Port - Subsqnt Channel Activation/Chan Inward Trunk w/out DID			UEPDC	UDTTC		14.48	14.48								
	4-Wire DS1 Loop / 4-Wire DDITS Trunk Port - Subsqnt Chan Activation Per Chan - Inward Trunk with DID			UEPDC	UDTTD		14.48	14.48								
	4-Wire DS1 Loop / 4-Wire DDITS Trunk Port - Subsqnt Chan Activation / Chan - 2-Way DID w User Trans			UEPDC	UDTTE		14.48	14.48								
BIPOLAR 8 ZERO SUBSTITUTION																
	B8ZS -Superframe Format			UEPDC	CCOSF		0.00i	600.00s								
	B8ZS - Extended Superframe Format			UEPDC	CCOEF		0.00i	600.00s								
Alternate Mark Inversion																
	AMI -Superframe Format			UEPDC	MCOSF		0.00	0.00								

UNBUNDLED NETWORK ELEMENTS - Alabama														Attachment: 2		Exhibit: A	
CATEGORY	RATE ELEMENTS	Interim	Zone	BCS	USOC	RATES ($)					Svc Order Submitted Elec per LSR	Svc Order Submitted Manually per LSR	Incremental Charge - Manual Svc Order vs. Electronic-1st	Incremental Charge - Manual Svc Order vs. Electronic-Add'l	Incremental Charge - Manual Svc Order vs. Electronic-Disc 1st	Incremental Charge - Manual Svc Order vs. Electronic-Disc Add'l
						Rec	Nonrecurring		Nonrecurring Disconnect		OSS Rates ($)					
							First	Add'l	First	Add'l	SOMEC	SOMAN	SOMAN	SOMAN	SOMAN	SOMAN
	AMI - Extended SuperFrame Format			UEPDC	MCOPO		0.00	0.00								
Telephone Number/Trunk Group Establisment Charges																
	Telephone Number for 2-Way Trunk Group			UEPDC	UDTGX	0.00										
	Telephone Number for 1-Way Outward Trunk Group			UEPDC	UDTGY	0.00										
	Telephone Number for 1-Way Inward Trunk Group Without DID			UEPDC	UDTGZ	0.00										
	DID Numbers for each Group of 20 DID Numbers			UEPDC	ND4	0.00	0.00									
	DID Numbers, Non- consecutive DID Numbers , Per Number			UEPDC	ND5	0.00										
	Reserve Non-Consecutive DID Nos.			UEPDC	ND6	0.00	0.00	0.00								
	Reserve DID Numbers			UEPDC	NDV	0.00	0.00	0.00								
Dedicated DS1 (Interoffice Channel Mileage) - FX/FCO for 4-Wire DS1 Digital Loop with 4-Wire DDITS Trunk Port																
	Interoffice Channel Mileage - Fixed rate 0-8 miles (Facilities Termination)			UEPDC	1LNO1	60.16	89.27	81.81	16.35	14.44						
	Interoffice Channel Mileage - Additional rate per mile - 0-8 miles			UEPDC	1LNOA	0.18	0.00	0.00								
	Interoffice Channel Mileage - Fixed rate 9-25 miles (Facilities Termination)			UEPDC	1LNO2	0.00	0.00	0.00								
	Interoffice Channel Mileage - Additional rate per mile - 9-25 miles			UEPDC	1LNOB	0.18	0.00	0.00								
	Interoffice Channel Mileage - Fixed rate 25+ miles (Facilities Termination)			UEPDC	1LNO3	0.00	0.00	0.00	0.00							
	Interoffice Channel Mileage - Additional rate per mile - 25+ miles			UEPDC	1LNOC	0.18	0.00	0.00								
	Local Number Portability, per DS0 Activated			UEPDC	LNPCP	3.15	0.00	0.00	0.00							
	Central Office Termininating Point			UEPDC	CTG	0.00										
4-WIRE DS1 LOOP WITH CHANNELIZATION WITH PORT																
System is 1 DS1 Loop, 1 D4 Channel Bank, and up to 24 Feature Activations																
Each System can have up to 24 combinations of rates depending on type and number of ports used																
The UNE-P DS1 combination rates below for 4-Wire DS1 Loop with Channelization with Port in this rate exhibit apply to the embedded base in place as of 10/2/03 until 4/1/04. After 4/1/04 these rates shall revert to tariff rates or a separate agreement.																
Requests for 4-Wire DS1 Loop with Channelization with Port after the effective date of this amendment shall be provided pursuant to a separate agreement or tariff at BellSouth's discretion.																
UNE DS1 Loop																
	4-Wire DS1 Loop - UNE Zone 1		1	UEPMG	USLDC	82.55	0.00	0.00								
	4-Wire DS1 Loop - UNE Zone 2		2	UEPMG	USLDC	154.18	0.00	0.00								
	4-Wire DS1 Loop - UNE Zone 3		3	UEPMG	USLDC	314.52	0.00	0.00								
UNE DSO Channelization Capacities (D4 Channel Bank Configurations)																
	24 DSO Channel Capacity - 1 per DS1			UEPMG	VUM24	101.40	0.00	0.00								
	48 DSO Channel Capacity - 1 per 2 DS1s			UEPMG	VUM48	202.80	0.00	0.00								
	96 DSO Channel Capacity -1per 4 DS1s			UEPMG	VUM96	405.60	0.00	0.00								
	144 DS0 Channel Capacity - 1 per 6 DS1s			UEPMG	VUM14	608.40	0.00	0.00								
	192 DS0 Channel Capacity -1 per 8 DS1s			UEPMG	VUM19	811.20	0.00	0.00								
	240 DS0 Channel Capacity - 1 per 10 DS1s			UEPMG	VUM2O	1,014.00	0.00	0.00								
	288 DS0 Channel Capacity - 1 per 12 DS1s			UEPMG	VUM28	1,216.80	0.00	0.00								
	384 DS0 Channel Capacity - 1 per 16 DS1s			UEPMG	VUM38	1,622.40	0.00	0.00								
	480 DS0 Channel Capacity - 1 per 20 DS1s			UEPMG	VUM4O	2,028.00	0.00	0.00								
	576 DS0 Channel Capacity -1 per 24 DS1s			UEPMG	VUM57	2,433.60	0.00	0.00								
	672 DS0 Channel Capacity - 1 per 28 DS1s			UEPMG	VUM67	2,839.20	0.00	0.00								
Non-Recurring Charges (NRC) Associated with 4-Wire DS1 Loop with Channeliztion with Port - Conversion Charge Based on a System																
A Minimum System configuration is One (1) DS1, One (1) D4 Channel Bank, and Up To 24 DSO Ports with Feature Activations.																
Multiples of this configuration functioning as one are considered Add'l after the minimum system configuration is counted.																
	NRC - Conversion (Currently Combined) with or without BellSouth Allowed Changes			UEPMG	USAC4	0.00	150.48	8.36								
System Additions at End User Locations Where 4-Wire DS1 Loop with Channelization with Port Combination Currently Exists and																
New (Not Currently Combined) in all states, except in Density Zone 1 of Top 8 MSA's																
	1 DS1/D4 Channel Bank - Additionally Add NRC for each Port and Assoc Fea Activation (E:4/1/2004)			UEPMG	VUMD4	0.00	716.11	468.04	148.75	17.65						
Bipolar 8 Zero Substitution																
	Clear Channel Capability Format, superframe - Subsequent Activity Only			UEPMG	CCOSF	0.00	0.00i	600.00s								
	Clear Channel Capability Format - Extended Superframe - Subsequent Activity Only			UEPMG	CCOEF	0.00	0.00i	600.00s								

UNBUNDLED NETWORK ELEMENTS - Alabama														Attachment: 2		Exhibit: A	
CATEGORY		RATE ELEMENTS	Interim	Zone	BCS	USOC	RATES ($)					Svc Order Submitted Elec per LSR	Svc Order Submitted Manually per LSR	Incremental Charge - Manual Svc Order vs. Electronic-1st	Incremental Charge - Manual Svc Order vs. Electronic-Add'l	Incremental Charge - Manual Svc Order vs. Electronic-Disc 1st	Incremental Charge - Manual Svc Order vs. Electronic-Disc Add'l
							Rec	Nonrecurring		Nonrecurring Disconnect		OSS Rates ($)					
								First	Add'l	First	Add'l	SOMEC	SOMAN	SOMAN	SOMAN	SOMAN	SOMAN
	Alternate Mark Inversion (AMI)																
		Superframe Format			UEPMG	MCOSF	0.00	0.00	0.00								
		Extended Superframe Format			UEPMG	MCOPO	0.00	0.00	0.00								
	Exchange Ports Associated with 4-Wire DS1 Loop with Channelization with Port																
	Exchange Ports																
		Line Side Combination Channelized PBX Trunk Port - Business (E:4/1/2004)			UEPPX	UEPCX	1.15	0.00	0.00	0.00	0.00						
		Line Side Outward Channelized PBX Trunk Port - Business (E:4/1/2004)			UEPPX	UEPOX	1.15	0.00	0.00	0.00	0.00						
		Line Side Inward Only Channelized PBX Trunk Port without DID (E:4/1/2004)			UEPPX	UEP1X	1.15	0.00	0.00	0.00	0.00						
		2-Wire Trunk Side Unbundled Channelized DID Trunk Port (E:4/1/2004)			UEPPX	UEPDM	8.05	0.00	0.00	0.00	0.00						
		Unbundled Exchange Ports, 2-Wire Channelized – Outdial – (AL, KY, LA, MS, & TN)(Conversion from Network Access Service) (E:4/1/2004)			UEPPX	UEPCY	1.15										
		Unbundled Exchange Ports, 2-Wire Channelized – Combination (AL, KY, LA, MS, & TN) (Conversion from Network Access Service) (E:4/1/2004)			UEPPX	UEPCT	1.15										
		2-Wire Channelized PBX Area Calling Service Combination Port (AL Only) (E:4/1/2004)			UEPPX	UEPA4	1.15	0.00	0.00								
		2 Wire Channelized PBX Area Calling Service Outgoing Only Port (AL Only) (E:4/1/2004)			UEPPX	UEPA3	1.15	0.00	0.00								
	Feature Activations - Unbundled Loop Concentration																
		Feature (Service) Activation for each Line Port Terminated in D4 Bank			UEPPX	1PQWM	0.56	54.55									
		Feature (Service) Activation for each Trunk Port Terminated in D4 Bank			UEPPX	1PQWU	0.56	77.03									
	Telephone Number/ Group Establishment Charges for DID Service																
		DID Trunk Termination (1 per Port)			UEPPX	NDT	0.00	0.00	0.00								
		DID Numbers - groups of 20 - Valid all States			UEPPX	ND4	0.00	0.00	0.00								
		Non-Consecutive DID Numbers - per number			UEPPX	ND5	0.00	0.00	0.00								
		Reserve Non-Consecutive DID Numbers			UEPPX	ND6	0.00	0.00	0.00								
		Reserve DID Numbers			UEPPX	NDV	0.00	0.00	0.00								
	Local Number Portability																
		Local Number Portability - 1 per port			UEPPX	LNPCP	3.15	0.00	0.00								
	FEATURES - Vertical and Optional																
	Local Switching Features Offered with Line Side Ports Only																
		All Features Available			UEPPX	UEPVF	1.98	0.00	0.00								
UNBUNDLED CENTREX PORT/LOOP COMBINATIONS - COST BASED RATES																	
	1. Cost Based Rates are applied where BellSouth is required by FCC and/or State Commission rule to provide Unbundled Local Switching or Switch Ports.																
	2. Features shall apply to the Unbundled Port/Loop Combination - Cost Based Rate section in the same manner as they are applied to the Stand-Alone Unbundled Port section of this Rate Exhibit.																
	3. End Office and Tandem Switching Usage and Common Transport Usage rates in the Port section of this rate exhibit shall apply to all combinations of loop/port network elements except for UNE Coin Port/Loop Combinations.																
	4. The first and additional Port nonrecurring charges apply to Not Currently Combined Combos. For Currently Combined Combos, the nonrecurring charges shall be those identified in the Nonrecurring - Currently Combined sections. Additional NRCs may apply also and are categorized accordingly.																
	5. Market Rates for Unbundled Centrex Port/Loop Combination will be negotiated on an Individual Case Basis, until further notice.																
	UNE-P CENTREX - 1AESS - (Valid in AL,FL,GA,KY,LA,MS,&TN only)																
	2-Wire VG Loop/2-Wire Voice Grade Port (Centrex) Combo																
	UNE Port/Loop Combination Rates (Non-Design)																
		2-Wire VG Loop/2-Wire Voice Grade Port (Centrex) Port Combo - Non-Design		1	UEP91		12.70										
		2-Wire VG Loop/2-Wire Voice Grade Port (Centrex)Port Combo - Non-Design		2	UEP91		21.19										
		2-Wire VG Loop/2-Wire Voice Grade Port (Centrex)Port Combo - Non-Design		3	UEP91		34.80										
	UNE Port/Loop Combination Rates (Design)																
		2-Wire VG Loop/2-Wire Voice Grade Port (Centrex) Port Combo - Design		1	UEP91		15.53										

UNBUNDLED NETWORK ELEMENTS - Alabama														Attachment: 2		Exhibit: A	
CATEGORY		RATE ELEMENTS	Interim	Zone	BCS	USOC	RATES ($)					Svc Order Submitted Elec per LSR	Svc Order Submitted Manually per LSR	Incremental Charge - Manual Svc Order vs. Electronic-1st	Incremental Charge - Manual Svc Order vs. Electronic-Add'l	Incremental Charge - Manual Svc Order vs. Electronic-Disc 1st	Incremental Charge - Manual Svc Order vs. Electronic-Disc Add'l
							Rec	Nonrecurring		Nonrecurring Disconnect		OSS Rates ($)					
								First	Add'l	First	Add'l	SOMEC	SOMAN	SOMAN	SOMAN	SOMAN	SOMAN
		2-Wire VG Loop/2-Wire Voice Grade Port (Centrex)Port Combo - Design		2	UEP91		24.00										
		2-Wire VG Loop/2-Wire Voice Grade Port (Centrex)Port Combo - Design		3	UEP91		37.29										
	UNE Loop Rate																
		2-Wire Voice Grade Loop (SL 1) - Zone 1		1	UEP91	UECS1	11.55										
		2-Wire Voice Grade Loop (SL 1) - Zone 2		2	UEP91	UECS1	20.04										
		2-Wire Voice Grade Loop (SL 1) - Zone 3		3	UEP91	UECS1	33.65										
		2-Wire Voice Grade Loop (SL 2) - Zone 1		1	UEP91	UECS2	14.38										
		2-Wire Voice Grade Loop (SL 2) - Zone 2		2	UEP91	UECS2	22.85										
		2-Wire Voice Grade Loop (SL 2) - Zone 3		3	UEP91	UECS2	36.14										
	UNE Ports																
	All States (Except North Carolina and Sout Carolina)																
		2-Wire Voice Grade Port (Centrex) Basic Local Area			UEP91	UEPYA	1.15	40.19	19.83	24.91	6.63						
		2-Wire Voice Grade Port (Centrex 800 termination)Basic Local Area			UEP91	UEPYB	1.15	40.19	19.83	24.91	6.63						
		2-Wire Voice Grade Port (Centrex with Caller ID)Note1 Basic Local Area			UEP91	UEPYH	1.15	40.19	19.83	24.91	6.63						
		2-Wire Voice Grade Port (Centrex from diff Serving Wire Center) Note 2, 3 Basic Local Area			UEP91	UEPYM	1.15	90.38	57.27	48.66	8.77						
		2-Wire Voice Grade Port, Diff Serving Wire Center - 800 Service Term - Basic Local Area			UEP91	UEPYZ	1.15	90.38	57.27	48.66	8.77						
		2-Wire Voice Grade Port terminated in on Megalink or equivalent - Basic Local Area			UEP91	UEPY9	1.15	40.19	19.83	24.91	6.63						
		2-Wire Voice Grade Port Terminated on 800 Service Term - Basic Local Area			UEP91	UEPY2	1.15	40.19	19.83	24.91	6.63						
	AL, KY, LA, MS, & TN Only																
		2-Wire Voice Grade Port (Centrex)			UEP91	UEPQA	1.15	40.19	19.83	24.91	6.63						
		2-Wire Voice Grade Port (Centrex 800 termination)			UEP91	UEPQB	1.15	40.19	19.83	24.91	6.63						
		2-Wire Voice Grade Port (Centrex with Caller ID)1			UEP91	UEPQH	1.15	40.19	19.83	24.91	6.63						
		2-Wire Voice Grade Port (Centrex from diff Serving Wire Center)2,3			UEP91	UEPQM	1.15	90.38	57.27	48.66	8.77						
		2-Wire Voice Grade Port, Diff Serving Wire Center - 2,3 - 800 Service Term			UEP91	UEPQZ	1.15	90.38	57.27	48.66	8.77						
		2-Wire Voice Grade Port terminated in on Megalink or equivalent			UEP91	UEPQ9	1.15	40.19	19.83	24.91	6.63						
		2-Wire Voice Grade Port Terminated on 800 Service Term			UEP91	UEPQ2	1.15	40.19	19.83	24.91	6.63						
	Local Switching																
		Centrex Intercom Funtionality, per port			UEP91	URECS	0.5488										
	Local Number Portability																
		Local Number Portability (1 per port)			UEP91	LNPCC	0.35										
	Features																
		All Standard Features Offered, per port			UEP91	UEPVF	1.98										
		All Select Features Offered, per port			UEP91	UEPVS	0.00	405.52									
		All Centrex Control Features Offered, per port			UEP91	UEPVC	1.98										
	NARS																
		Unbundled Network Access Register - Combination			UEP91	UARCX	0.00	0.00	0.00	0.00	0.00						
		Unbundled Network Access Register - Indial			UEP91	UAR1X	0.00	0.00	0.00	0.00	0.00						
		Unbundled Network Access Register - Outdial			UEP91	UAROX	0.00	0.00	0.00	0.00	0.00						
	Miscellaneous Terminations																
	2-Wire Trunk Side																
		Trunk Side Terminations, each			UEP91	CENA6	8.05	119.31	18.74	59.90	3.76						
	Interoffice Channel Mileage - 2-Wire																
		Interoffice Channel Facilities Termination - Voice Grade			UEP91	M1GBC	21.13	40.54	27.41	16.74	6.90						
		Interoffice Channel mileage, per mile or fraction of mile			UEP91	M1GBM	0.008838										
	Feature Activations (DS0) Centrex Loops on Channelized DS1 Service																
	D4 Channel Bank Feature Activations																
		Feature Activation on D-4 Channel Bank Centrex Loop Slot			UEP91	1PQWS	0.56										

UNBUNDLED NETWORK ELEMENTS - Alabama														Attachment: 2		Exhibit: A	
CATEGORY	RATE ELEMENTS	Interim	Zone	BCS	USOC	RATES ($)					Svc Order Submitted Elec per LSR	Svc Order Submitted Manually per LSR	Incremental Charge - Manual Svc Order vs. Electronic-1st	Incremental Charge - Manual Svc Order vs. Electronic-Add'l	Incremental Charge - Manual Svc Order vs. Electronic-Disc 1st	Incremental Charge - Manual Svc Order vs. Electronic-Disc Add'l
						Rec	Nonrecurring		Nonrecurring Disconnect		OSS Rates ($)					
							First	Add'l	First	Add'l	SOMEC	SOMAN	SOMAN	SOMAN	SOMAN	SOMAN
	Feature Activation on D-4 Channel Bank FX line Side Loop Slot			UEP91	1PQW6	0.56										
	Feature Activation on D-4 Channel Bank FX Trunk Side Loop Slot			UEP91	1PQW7	0.56										
	Feature Activation on D-4 Channel Bank Centrex Loop Slot - Different Wire Center			UEP91	1PQWP	0.56										
	Feature Activation on D-4 Channel Bank Private Line Loop Slot			UEP91	1PQWV	0.56										
	Feature Activation on D-4 Channel Bank Tjie Line/Trunk Loop Slot			UEP91	1PQWQ	0.56										
	Feature Activation on D-4 Channel Bank WATS Loop Slot			UEP91	1PQWA	0.56										
	Non-Recurring Charges (NRC) Associated with UNE-P Centrex															
	Conversion - Currently Combined Switch-As-Is with allowed changes, per port			UEP91	USAC2		0.10	0.10								
	Conversion of Existing Centrex Common Block			UEP91	USACN		37.75	16.58								
	New Centrex Standard Common Block			UEP91	M1ACS	0.00	667.21									
	New Centrex Customized Common Block			UEP91	M1ACC	0.00	667.21									
	Secondary Block, per Block			UEP91	M2CC1	0.00	78.02									
	NAR Establishment Charge, Per Occasion			UEP91	URECA	0.00	72.73									
	Additional Non-Recurring Charges (NRC)															
	Unbundled Miscellaneous Rate Element, Tag Loop at End Use Premise			UEP91	URETL		8.33	0.83								
	Unbundled Miscellaneous Rate Element, Tag Design Loop at End Use Premise			UEP91	URETN		11.21	1.10								
	UNE-P CENTREX - 5ESS (Valid in All States)															
	2-Wire VG Loop/2-Wire Voice Grade Port (Centrex) Combo															
	UNE Port/Loop Combination Rates (Non-Design)															
	2-Wire VG Loop/2-Wire Voice Grade Port (Centrex) Port Combo - Non-Design		1	UEP95		12.70										
	2-Wire VG Loop/2-Wire Voice Grade Port (Centrex)Port Combo - Non-Design		2	UEP95		21.19										
	2-Wire VG Loop/2-Wire Voice Grade Port (Centrex)Port Combo - Non-Design		3	UEP95		34.80										
	UNE Port/Loop Combination Rates (Design)															
	2-Wire VG Loop/2-Wire Voice Grade Port (Centrex) Port Combo - Design		1	UEP95		15.53										
	2-Wire VG Loop/2-Wire Voice Grade Port (Centrex)Port Combo - Design		2	UEP95		24.00										
	2-Wire VG Loop/2-Wire Voice Grade Port (Centrex)Port Combo - Design		3	UEP95		37.29										
	UNE Loop Rate															
	2-Wire Voice Grade Loop (SL 1) - Zone 1		1	UEP95	UECS1	11.55										
	2-Wire Voice Grade Loop (SL 1) - Zone 2		2	UEP95	UECS1	20.04										
	2-Wire Voice Grade Loop (SL 1) - Zone 3		3	UEP95	UECS1	33.65										
	2-Wire Voice Grade Loop (SL 2) - Zone 1		1	UEP95	UECS2	14.38										
	2-Wire Voice Grade Loop (SL 2) - Zone 2		2	UEP95	UECS2	22.85										
	2-Wire Voice Grade Loop (SL 2) - Zone 3		3	UEP95	UECS2	36.14										
	UNE Port Rate															
	All States															
	2-Wire Voice Grade Port (Centrex) Basic Local Area			UEP95	UEPYA	1.15	40.19	19.83	24.91	6.63						
	2-Wire Voice Grade Port (Centrex 800 termination)			UEP95	UEPYB	1.15	40.19	19.83	24.91	6.63						
	2-Wire Voice Grade Port (Centrex with Caller ID)1Basic Local Area			UEP95	UEPYH	1.15	40.19	19.83	24.91	6.63						
	2-Wire Voice Grade Port (Centrex from diff Serving Wire Center)2,3 Basic Local Area			UEP95	UEPYM	1.15	90.38	57.27	48.66	8.77						
	2-Wire Voice Grade Port, Diff Serving Wire Center 2,3 - 800 Service Term - Basic Local Area			UEP95	UEPYZ	1.15	90.38	57.27	48.66	8.77						
	2-Wire Voice Grade Port terminated in on Megalink or equivalent - Basic Local Area			UEP95	UEPY9	1.15	40.19	19.83	24.91	6.63						

UNBUNDLED NETWORK ELEMENTS - Alabama														Attachment: 2		Exhibit: A	
CATEGORY		RATE ELEMENTS	Interim	Zone	BCS	USOC	RATES ($)					Svc Order Submitted Elec per LSR	Svc Order Submitted Manually per LSR	Incremental Charge - Manual Svc Order vs. Electronic-1st	Incremental Charge - Manual Svc Order vs. Electronic-Add'l	Incremental Charge - Manual Svc Order vs. Electronic-Disc 1st	Incremental Charge - Manual Svc Order vs. Electronic-Disc Add'l
							Rec	Nonrecurring		Nonrecurring Disconnect		OSS Rates ($)					
								First	Add'l	First	Add'l	SOMEC	SOMAN	SOMAN	SOMAN	SOMAN	SOMAN
		2-Wire Voice Grade Port Terminated on 800 Service Term - Basic Local Area			UEP95	UEPY2	1.15	40.19	19.83	24.91	6.63						
	AL, KY, LA, MS, SC, & TN Only																
		2-Wire Voice Grade Port (Centrex)			UEP95	UEPQA	1.15	40.19	19.83	24.91	6.63						
		2-Wire Voice Grade Port (Centrex 800 termination)			UEP95	UEPQB	1.15	40.19	19.83	24.91	6.63						
		2-Wire Voice Grade Port (Centrex with Caller ID)1			UEP95	UEPQH	1.15	40.19	19.83	24.91	6.63						
		2-Wire Voice Grade Port (Centrex from diff Serving Wire Center)2,3			UEP95	UEPQM	1.15	90.38	57.27	48.66	8.77						
		2-Wire Voice Grade Port, Diff Serving Wire Center - 800 Service Term 2,3			UEP95	UEPQZ	1.15	90.38	57.27	48.66	8.77						
		2-Wire Voice Grade Port terminated in on Megalink or equivalent			UEP95	UEPQ9	1.15	40.19	19.83	24.91	6.63						
		2-Wire Voice Grade Port Terminated on 800 Service Term			UEP95	UEPQ2	1.15	40.19	19.83	24.91	6.63						
	Local Switching																
		Centrex Intercom Funtionality, per port			UEP95	URECS	0.5488										
	Local Number Portability																
		Local Number Portability (1 per port)			UEP95	LNPCC	0.35										
	Features																
		All Standard Features Offered, per port			UEP95	UEPVF	1.98										
		All Select Features Offered, per port			UEP95	UEPVS	0.00	405.52									
		All Centrex Control Features Offered, per port			UEP95	UEPVC	1.98										
	NARS																
		Unbundled Network Access Register - Combination			UEP95	UARCX	0.00	0.00	0.00	0.00	0.00						
		Unbundled Network Access Register - Indial			UEP95	UAR1X	0.00	0.00	0.00	0.00	0.00						
		Unbundled Network Access Register - Outdial			UEP95	UAROX	0.00	0.00	0.00	0.00	0.00						
	Miscellaneous Terminations																
	2-Wire Trunk Side																
		Trunk Side Terminations, each			UEP95	CEND6	8.05	119.31	18.74	59.90	3.76						
	4-Wire Digital (1.544 Megabits)																
		DS1 Circuit Terminations, each			UEP95	M1HD1	60.09	202.02	95.69	72.59	2.46						
		DS0 Channels Activated, each			UEP95	M1HDO	0.00	14.48									
	Interoffice Channel Mileage - 2-Wire																
		Interoffice Channel Facilities Termination			UEP95	M1GBC	21.13	40.54	27.41	16.74	6.90						
		Interoffice Channel mileage, per mile or fraction of mile			UEP95	M1GBM	0.008838										
	Feature Activations (DS0) Centrex Loops on Channelized DS1 Service																
	D4 Channel Bank Feature Activations																
		Feature Activation on D-4 Channel Bank Centrex Loop Slot			UEP95	1PQWS	0.56										
		Feature Activation on D-4 Channel Bank FX line Side Loop Slot			UEP95	1PQW6	0.56										
		Feature Activation on D-4 Channel Bank FX Trunk Side Loop Slot			UEP95	1PQW7	0.56										
		Feature Activation on D-4 Channel Bank Centrex Loop Slot - Different Wire Center			UEP95	1PQWP	0.56										
		Feature Activation on D-4 Channel Bank Private Line Loop Slot			UEP95	1PQWV	0.56										
		Feature Activation on D-4 Channel Bank Tjie Line/Trunk Loop Slot			UEP95	1PQWQ	0.56										
		Feature Activation on D-4 Channel Bank WATS Loop Slot			UEP95	1PQWA	0.56										
	Non-Recurring Charges (NRC) Associated with UNE-P Centrex																
		NRC Conversion Currently Combined Switch-As-Is with allowed changes, per port			UEP95	USAC2		0.10	0.10								
		Conversion of Existing Centrex Common Block, each			UEP95	USACN		37.75	16.58								
		New Centrex Standard Common Block			UEP95	M1ACS	0.00	667.21									
		New Centrex Customized Common Block			UEP95	M1ACC	0.00	667.21									
		NAR Establishment Charge, Per Occasion			UEP95	URECA	0.00	72.73									
	Additional Non-Recurring Charges (NRC)																
		Unbundled Miscellaneous Rate Element, Tag Loop at End Use Premise			UEP95	URETL		8.33	0.83								

UNBUNDLED NETWORK ELEMENTS - Alabama														Attachment: 2		Exhibit: A	
CATEGORY		RATE ELEMENTS	Interim	Zone	BCS	USOC	RATES ($)					Svc Order Submitted Elec per LSR	Svc Order Submitted Manually per LSR	Incremental Charge - Manual Svc Order vs. Electronic-1st	Incremental Charge - Manual Svc Order vs. Electronic-Add'l	Incremental Charge - Manual Svc Order vs. Electronic-Disc 1st	Incremental Charge - Manual Svc Order vs. Electronic-Disc Add'l
							Rec	Nonrecurring		Nonrecurring Disconnect		OSS Rates ($)					
								First	Add'l	First	Add'l	SOMEC	SOMAN	SOMAN	SOMAN	SOMAN	SOMAN
		Unbundled Miscellaneous Rate Element, Tag Design Loop at End Use Premise			UEP95	URETN		11.21	1.10								
	UNE-P CENTREX - DMS100 (Valid in All States)																
	2-Wire VG Loop/2-Wire Voice Grade Port (Centrex) Combo																
	UNE Port/Loop Combination Rates (Non-Design)																
		2-Wire VG Loop/2-Wire Voice Grade Port (Centrex) Port Combo - Non-Design		1	UEP9D		12.70										
		2-Wire VG Loop/2-Wire Voice Grade Port (Centrex)Port Combo - Non-Design		2	UEP9D		21.19										
		2-Wire VG Loop/2-Wire Voice Grade Port (Centrex)Port Combo - Non-Design		3	UEP9D		34.80										
	UNE Port/Loop Combination Rates (Design)																
		2-Wire VG Loop/2-Wire Voice Grade Port (Centrex) Port Combo - Design		1	UEP9D		15.53										
		2-Wire VG Loop/2-Wire Voice Grade Port (Centrex)Port Combo - Design		2	UEP9D		24.00										
		2-Wire VG Loop/2-Wire Voice Grade Port (Centrex)Port Combo - Design		3	UEP9D		37.29										
	UNE Loop Rate																
		2-Wire Voice Grade Loop (SL 1) - Zone 1		1	UEP9D	UECS1	11.55										
		2-Wire Voice Grade Loop (SL 1) - Zone 2		2	UEP9D	UECS1	20.04										
		2-Wire Voice Grade Loop (SL 1) - Zone 3		3	UEP9D	UECS1	33.65										
		2-Wire Voice Grade Loop (SL 2) - Zone 1		1	UEP9D	UECS2	14.38										
		2-Wire Voice Grade Loop (SL 2) - Zone 2		2	UEP9D	UECS2	22.85										
		2-Wire Voice Grade Loop (SL 2) - Zone 3		3	UEP9D	UECS2	36.14										
	UNE Port Rate																
	ALL STATES																
		2-Wire Voice Grade Port (Centrex) Basic Local Area			UEP9D	UEPYA	1.15	40.19	19.83	24.91	6.63						
		2-Wire Voice Grade Port (Centrex 800 termination)Basic Local Area			UEP9D	UEPYB	1.15	40.19	19.83	24.91	6.63						
		2-Wire Voice Grade Port (Centrex / EBS-PSET)3Basic Local Area			UEP9D	UEPYC	1.15	40.19	19.83	24.91	6.63						
		2-Wire Voice Grade Port (Centrex / EBS-M5009)3Basic Local Area			UEP9D	UEPYD	1.15	40.19	19.83	24.91	6.63						
		2-Wire Voice Grade Port (Centrex / EBS-M5209))3 Basic Local Area			UEP9D	UEPYE	1.15	40.19	19.83	24.91	6.63						
		2-Wire Voice Grade Port (Centrex / EBS-M5112))3 Basic Local Area			UEP9D	UEPYF	1.15	40.19	19.83	24.91	6.63						
		2-Wire Voice Grade Port (Centrex / EBS-M5312))3Basic Local Area			UEP9D	UEPYG	1.15	40.19	19.83	24.91	6.63						
		2-Wire Voice Grade Port (Centrex / EBS-M5008))3 Basic Local Area			UEP9D	UEPYT	1.15	40.19	19.83	24.91	6.63						
		2-Wire Voice Grade Port (Centrex / EBS-M5208))3 Basic Local Area			UEP9D	UEPYU	1.15	40.19	19.83	24.91	6.63						
		2-Wire Voice Grade Port (Centrex / EBS-M5216))3 Basic Local Area			UEP9D	UEPYV	1.15	40.19	19.83	24.91	6.63						
		2-Wire Voice Grade Port (Centrex / EBS-M5316))3 Basic Local Area			UEP9D	UEPY3	1.15	40.19	19.83	24.91	6.63						
		2-Wire Voice Grade Port (Centrex with Caller ID) Basic Local Area			UEP9D	UEPYH	1.15	40.19	19.83	24.91	6.63						
		2-Wire Voice Grade Port (Centrex/Caller ID/Msg Wtg Lamp Indication))4 Basic Local Area			UEP9D	UEPYW	1.15	40.19	19.83	24.91	6.63						
		2-Wire Voice Grade Port (Centrex/Msg Wtg Lamp Indication))4 Basic Local Area			UEP9D	UEPYJ	1.15	40.19	19.83	24.91	6.63						
		2-Wire Voice Grade Port (Centrex from diff Serving Wire Center) 2,3-Basic Local Area			UEP9D	UEPYM	1.15	90.38	57.27	48.66	8.77						
		2-Wire Voice Grade Port (Centrex/differ SWC /EBS-PSET)2,3,4 Basic Local Area			UEP9D	UEPYO	1.15	90.38	57.27	48.66	8.77						

UNBUNDLED NETWORK ELEMENTS - Alabama														Attachment: 2		Exhibit: A	
CATEGORY		RATE ELEMENTS	Interim	Zone	BCS	USOC	RATES ($)					Svc Order Submitted Elec per LSR	Svc Order Submitted Manually per LSR	Incremental Charge - Manual Svc Order vs. Electronic-1st	Incremental Charge - Manual Svc Order vs. Electronic-Add'l	Incremental Charge - Manual Svc Order vs. Electronic-Disc 1st	Incremental Charge - Manual Svc Order vs. Electronic-Disc Add'l
							Rec	Nonrecurring		Nonrecurring Disconnect		OSS Rates ($)					
								First	Add'l	First	Add'l	SOMEC	SOMAN	SOMAN	SOMAN	SOMAN	SOMAN
		2-Wire Voice Grade Port (Centrex/differ SWC /EBS-M5009)2,3,4 Basic Local Area			UEP9D	UEPYP	1.15	90.38	57.27	48.66	8.77						
		2-Wire Voice Grade Port (Centrex/differ SWC /EBS-5209)2,3,4 Basic Local Area			UEP9D	UEPYQ	1.15	90.38	57.27	48.66	8.77						
		2-Wire Voice Grade Port (Centrex/differ SWC /EBS-M5112)2,3,4 Basic Local Area			UEP9D	UEPYR	1.15	90.38	57.27	48.66	8.77						
		2-Wire Voice Grade Port (Centrex/differ SWC /EBS-M5312)2,3,4 Basic Local Area			UEP9D	UEPYS	1.15	90.38	57.27	48.66	8.77						
		2-Wire Voice Grade Port (Centrex/differ SWC /EBS-M5008)2,3,4 Basic Local Area			UEP9D	UEPY4	1.15	90.38	57.27	48.66	8.77						
		2-Wire Voice Grade Port (Centrex/differ SWC /EBS-M5208)2, 3 Basic Local Area			UEP9D	UEPY5	1.15	90.38	57.27	48.66	8.77						
		2-Wire Voice Grade Port (Centrex/differ SWC /EBS-M5216)2,3,4 Basic Local Area			UEP9D	UEPY6	1.15	90.38	57.27	48.66	8.77						
		2-Wire Voice Grade Port (Centrex/differ SWC /EBS-M5316)2,3,4 Basic Local Area			UEP9D	UEPY7	1.15	90.38	57.27	48.66	8.77						
		2-Wire Voice Grade Port, Diff Serving Wire Center - 800 Service Term 2,3			UEP9D	UEPYZ	1.15	90.38	57.27	48.66	8.77						
		2-Wire Voice Grade Port terminated in on Megalink or equivalent Basic Local Area			UEP9D	UEPY9	1.15	40.19	19.83	24.91	6.63						
		2-Wire Voice Grade Port Terminated on 800 Service Term Basic Local Area			UEP9D	UEPY2	1.15	40.19	19.83	24.91	6.63						
	AL, KY, LA, MS, SC, & TN Only																
		2-Wire Voice Grade Port (Centrex)			UEP9D	UEPQA	1.15	40.19	19.83	24.91	6.63						
		2-Wire Voice Grade Port (Centrex 800 termination)			UEP9D	UEPQB	1.15	40.19	19.83	24.91	6.63						
		2-Wire Voice Grade Port (Centrex / EBS-PSET)4			UEP9D	UEPQC	1.15	40.19	19.83	24.91	6.63						
		2-Wire Voice Grade Port (Centrex / EBS-M5009)4			UEP9D	UEPQD	1.15	40.19	19.83	24.91	6.63						
		2-Wire Voice Grade Port (Centrex / EBS-M5209)4			UEP9D	UEPQE	1.15	40.19	19.83	24.91	6.63						
		2-Wire Voice Grade Port (Centrex / EBS-M5112)4			UEP9D	UEPQF	1.15	40.19	19.83	24.91	6.63						
		2-Wire Voice Grade Port (Centrex / EBS-M5312)4			UEP9D	UEPQG	1.15	40.19	19.83	24.91	6.63						
		2-Wire Voice Grade Port (Centrex / EBS-M5008)4			UEP9D	UEPQT	1.15	40.19	19.83	24.91	6.63						
		2-Wire Voice Grade Port (Centrex / EBS-M5208)4			UEP9D	UEPQU	1.15	40.19	19.83	24.91	6.63						
		2-Wire Voice Grade Port (Centrex / EBS-M5216)4			UEP9D	UEPQV	1.15	40.19	19.83	24.91	6.63						
		2-Wire Voice Grade Port (Centrex / EBS-M5316)4			UEP9D	UEPQ3	1.15	40.19	19.83	24.91	6.63						
		2-Wire Voice Grade Port (Centrex with Caller ID)			UEP9D	UEPQH	1.15	40.19	19.83	24.91	6.63						
		2-Wire Voice Grade Port (Centrex/Caller ID/Msg Wtg Lamp Indication)4			UEP9D	UEPQW	1.15	40.19	19.83	24.91	6.63						
		2-Wire Voice Grade Port (Centrex/Msg Wtg Lamp Indication)4			UEP9D	UEPQJ	1.15	40.19	19.83	24.91	6.63						
		2-Wire Voice Grade Port (Centrex from diff Serving Wire Center) 2,3			UEP9D	UEPQM	1.15	90.38	57.27	48.66	8.77						
		2-Wire Voice Grade Port (Centrex/differ SWC /EBS-PSET)2,3,4			UEP9D	UEPQO	1.15	90.38	57.27	48.66	8.77						
		2-Wire Voice Grade Port (Centrex/differ SWC /EBS-M5009)2,3,4			UEP9D	UEPQP	1.15	90.38	57.27	48.66	8.77						
		2-Wire Voice Grade Port (Centrex/differ SWC /EBS-5209)2,3,4			UEP9D	UEPQQ	1.15	90.38	57.27	48.66	8.77						
		2-Wire Voice Grade Port (Centrex/differ SWC /EBS-M5112)2,3,4			UEP9D	UEPQR	1.15	90.38	57.27	48.66	8.77						
		2-Wire Voice Grade Port (Centrex/differ SWC /EBS-M5312)2,3,4			UEP9D	UEPQS	1.15	90.38	57.27	48.66	8.77						
		2-Wire Voice Grade Port (Centrex/differ SWC /EBS-M5008)2,3,4			UEP9D	UEPQ4	1.15	90.38	57.27	48.66	8.77						
		2-Wire Voice Grade Port (Centrex/differ SWC /EBS-M5208)2,3,4			UEP9D	UEPQ5	1.15	90.38	57.27	48.66	8.77						
		2-Wire Voice Grade Port (Centrex/differ SWC /EBS-M5216)2,3,4			UEP9D	UEPQ6	1.15	90.38	57.27	48.66	8.77						
		2-Wire Voice Grade Port (Centrex/differ SWC /EBS-M5316)2,3,4			UEP9D	UEPQ7	1.15	90.38	57.27	48.66	8.77						

UNBUNDLED NETWORK ELEMENTS - Alabama														Attachment: 2		Exhibit: A	
CATEGORY		RATE ELEMENTS	Interim	Zone	BCS	USOC	RATES ($)					Svc Order Submitted Elec per LSR	Svc Order Submitted Manually per LSR	Incremental Charge - Manual Svc Order vs. Electronic-1st	Incremental Charge - Manual Svc Order vs. Electronic-Add'l	Incremental Charge - Manual Svc Order vs. Electronic-Disc 1st	Incremental Charge - Manual Svc Order vs. Electronic-Disc Add'l
							Rec	Nonrecurring		Nonrecurring Disconnect		OSS Rates ($)					
								First	Add'l	First	Add'l	SOMEC	SOMAN	SOMAN	SOMAN	SOMAN	SOMAN
		2-Wire Voice Grade Port, Diff Serving Wire Center - 800 Service Term 2,3			UEP9D	UEPQZ	1.15	90.38	57.27	48.66	8.77						
		2-Wire Voice Grade Port terminated in on Megalink or equivalent			UEP9D	UEPQ9	1.15	40.19	19.83	24.91	6.63						
		2-Wire Voice Grade Port Terminated on 800 Service Term			UEP9D	UEPQ2	1.15	40.19	19.83	24.91	6.63						
	Local Switching																
		Centrex Intercom Funtionality, per port			UEP9D	URECS	0.5488										
	Local Number Portability																
		Local Number Portability (1 per port)			UEP9D	LNPCC	0.35										
	Features																
		All Standard Features Offered, per port			UEP9D	UEPVF	1.98										
		All Select Features Offered, per port			UEP9D	UEPVS	0.00	405.52									
		All Centrex Control Features Offered, per port			UEP9D	UEPVC	1.98										
	NARS																
		Unbundled Network Access Register - Combination			UEP9D	UARCX	0.00	0.00	0.00	0.00	0.00						
		Unbundled Network Access Register - Inward			UEP9D	UAR1X	0.00	0.00	0.00	0.00	0.00						
		Unbundled Network Access Register - Outdial			UEP9D	UAROX	0.00	0.00	0.00	0.00	0.00						
	Miscellaneous Terminations																
	2-Wire Trunk Side																
		Trunk Side Terminations, each			UEP9D	CEND6	8.05	119.31	18.74	59.90	3.76						
	4-Wire Digital (1.544 Megabits)																
		DS1 Circuit Terminations, each			UEP9D	M1HD1	60.09	202.02	95.69	72.59	2.46						
		DS0 Channels Activiated per Channel			UEP9D	M1HDO	0.00	14.48									
	Interoffice Channel Mileage - 2-Wire																
		Interoffice Channel Facilities Termination			UEP9D	M1GBC	21.13	40.54	27.41	16.74	6.90						
		Interoffice Channel mileage, per mile or fraction of mile			UEP9D	M1GBM	0.008838										
	Feature Activations (DS0) Centrex Loops on Channelized DS1 Service																
	D4 Channel Bank Feature Activations																
		Feature Activation on D-4 Channel Bank Centrex Loop Slot			UEP9D	1PQWS	0.56										
		Feature Activation on D-4 Channel Bank FX line Side Loop Slot			UEP9D	1PQW6	0.56										
		Feature Activation on D-4 Channel Bank FX Trunk Side Loop Slot			UEP9D	1PQW7	0.56										
		Feature Activation on D-4 Channel Bank Centrex Loop Slot - Different Wire Center			UEP9D	1PQWP	0.56										
		Feature Activation on D-4 Channel Bank Private Line Loop Slot			UEP9D	1PQWV	0.56										
		Feature Activation on D-4 Channel Bank Tjie Line/Trunk Loop Slot			UEP9D	1PQWQ	0.56										
		Feature Activation on D-4 Channel Bank WATS Loop Slot			UEP9D	1PQWA	0.56										
	Non-Recurring Charges (NRC) Associated with UNE-P Centrex																
		NRC Conversion Currently Combined Switch-As-Is with allowed changes, per port			UEP9D	USAC2		0.10	0.10								
		Conversion of existing Centrex Common Block, each			UEP9D	USACN		37.75	16.58								
		New Centrex Standard Common Block			UEP9D	M1ACS	0.00	667.21									
		New Centrex Customized Common Block			UEP9D	M1ACC	0.00	667.21									
		NAR Establishment Charge, Per Occasion			UEP9D	URECA	0.00	72.73									
	Additional Non-Recurring Charges (NRC)																
		Unbundled Miscellaneous Rate Element, Tag Loop at End Use Premise			UEP9D	URETL		8.33	0.83								
		Unbundled Miscellaneous Rate Element, Tag Design Loop at End Use Premise			UEP9D	URETN		11.21	1.10								
	UNE-P CENTREX - EWSD (Valid in AL, FL, KY, LA, MS & TN)																
	2-Wire VG Loop/2-Wire Voice Grade Port (Centrex) Combo																
	UNE Port/Loop Combination Rates (Non-Design)																
		2-Wire VG Loop/2-Wire Voice Grade Port (Centrex) Port Combo - Non-Design		1	UEP9E		12.70										
		2-Wire VG Loop/2-Wire Voice Grade Port (Centrex)Port Combo - Non-Design		2	UEP9E		21.19										

UNBUNDLED NETWORK ELEMENTS - Alabama														Attachment: 2		Exhibit: A	
CATEGORY	RATE ELEMENTS	Interim	Zone	BCS	USOC	RATES ($)					Svc Order Submitted Elec per LSR	Svc Order Submitted Manually per LSR	Incremental Charge - Manual Svc Order vs. Electronic-1st	Incremental Charge - Manual Svc Order vs. Electronic-Add'l	Incremental Charge - Manual Svc Order vs. Electronic-Disc 1st	Incremental Charge - Manual Svc Order vs. Electronic-Disc Add'l
						Rec	Nonrecurring		Nonrecurring Disconnect		OSS Rates ($)					
							First	Add'l	First	Add'l	SOMEC	SOMAN	SOMAN	SOMAN	SOMAN	SOMAN
	2-Wire VG Loop/2-Wire Voice Grade Port (Centrex)Port Combo - Non-Design		3	UEP9E		34.80										
UNE Port/Loop Combination Rates (Design)																
	2-Wire VG Loop/2-Wire Voice Grade Port (Centrex) Port Combo - Design		1	UEP9E		15.53										
	2-Wire VG Loop/2-Wire Voice Grade Port (Centrex)Port Combo - Design		2	UEP9E		24.00										
	2-Wire VG Loop/2-Wire Voice Grade Port (Centrex)Port Combo - Design		3	UEP9E		37.29										
UNE Loop Rate																
	2-Wire Voice Grade Loop (SL 1) - Zone 1		1	UEP9E	UECS1	11.55										
	2-Wire Voice Grade Loop (SL 1) - Zone 2		2	UEP9E	UECS1	20.04										
	2-Wire Voice Grade Loop (SL 1) - Zone 3		3	UEP9E	UECS1	33.65										
	2-Wire Voice Grade Loop (SL 2) - Zone 1		1	UEP9E	UECS2	14.38										
	2-Wire Voice Grade Loop (SL 2) - Zone 2		2	UEP9E	UECS2	22.85										
	2-Wire Voice Grade Loop (SL 2) - Zone 3		3	UEP9E	UECS2	36.14										
UNE Port Rate																
AL, FL, KY, LA, MS, & TN only																
	2-Wire Voice Grade Port (Centrex) Basic Local Area			UEP9E	UEPYA	1.15	40.19	19.83	24.91	6.63						
	2-Wire Voice Grade Port (Centrex 800 termination)Basic Local Area			UEP9E	UEPYB	1.15	40.19	19.83	24.91	6.63						
	2-Wire Voice Grade Port (Centrex with Caller ID)1Basic Local Area			UEP9E	UEPYH	1.15	40.19	19.83	24.91	6.63						
	2-Wire Voice Grade Port (Centrex from diff Serving Wire Center)2,3 Basic Local Area			UEP9E	UEPYM	1.15	90.38	57.27	48.66	8.77						
	2-Wire Voice Grade Port, Diff Serving Wire Center 2,3 - 800 Service Term - Basic Local Area			UEP9E	UEPYZ	1.15	90.38	57.27	48.66	8.77						
	2-Wire Voice Grade Port terminated in on Megalink or equivalent - Basic Local Area			UEP9E	UEPY9	1.15	40.19	19.83	24.91	6.63						
	2-Wire Voice Grade Port Terminated on 800 Service Term - Basic Local Area			UEP9E	UEPY2	1.15	40.19	19.83	24.91	6.63						
AL, KY, LA, MS, & TN Only																
	2-Wire Voice Grade Port (Centrex)			UEP9E	UEPQA	1.15	40.19	19.83	24.91	6.63						
	2-Wire Voice Grade Port (Centrex 800 termination)			UEP9E	UEPQB	1.15	40.19	19.83	24.91	6.63						
	2-Wire Voice Grade Port (Centrex with Caller ID)1			UEP9E	UEPQH	1.15	40.19	19.83	24.91	6.63						
	2-Wire Voice Grade Port (Centrex from diff Serving Wire Center)2,3			UEP9E	UEPQM	1.15	90.38	57.27	48.66	8.77						
	2-Wire Voice Grade Port, Diff Serving Wire Center 2,3 - 800 Service Term			UEP9E	UEPQZ	1.15	90.38	57.27	48.66	8.77						
	2-Wire Voice Grade Port terminated in on Megalink or equivalent			UEP9E	UEPQ9	1.15	40.19	19.83	24.91	6.63						
	2-Wire Voice Grade Port Terminated on 800 Service Term			UEP9E	UEPQ2	1.15	40.19	19.83	24.91	6.63						
Local Switching																
	Centrex Intercom Funtionality, per port			UEP9E	URECS	0.5488										
Local Number Portability																
	Local Number Portability (1 per port)			UEP9E	LNPCC	0.35										
Features																
	All Standard Features Offered, per port			UEP9E	UEPVF	1.98										
	All Select Features Offered, per port			UEP9E	UEPVS	0.00	405.52									
	All Centrex Control Features Offered, per port			UEP9E	UEPVC	1.98										
NARS																
	Unbundled Network Access Register - Combination			UEP9E	UARCX	0.00	0.00	0.00	0.00	0.00						
	Unbundled Network Access Register - Indial			UEP9E	UAR1X	0.00	0.00	0.00	0.00	0.00						
	Unbundled Network Access Register - Outdial			UEP9E	UAROX	0.00	0.00	0.00	0.00	0.00						
Miscellaneous Terminations																
2-Wire Trunk Side																
	Trunk Side Terminations, each			UEP9E	CEND6	8.05	119.31	18.74	59.90	3.76						
4-Wire Digital (1.544 Megabits)																
	DS1 Circuit Terminations, each			UEP9E	M1HD1	60.09	202.02	95.69	72.59	2.46						

UNBUNDLED NETWORK ELEMENTS - Alabama														Attachment: 2		Exhibit: A	
CATEGORY	RATE ELEMENTS	Interim	Zone	BCS	USOC	RATES ($)					Svc Order Submitted Elec per LSR	Svc Order Submitted Manually per LSR	Incremental Charge - Manual Svc Order vs. Electronic-1st	Incremental Charge - Manual Svc Order vs. Electronic-Add'l	Incremental Charge - Manual Svc Order vs. Electronic-Disc 1st	Incremental Charge - Manual Svc Order vs. Electronic-Disc Add'l
						Rec	Nonrecurring		Nonrecurring Disconnect		OSS Rates ($)					
							First	Add'l	First	Add'l	SOMEC	SOMAN	SOMAN	SOMAN	SOMAN	SOMAN
	DS0 Channel Activated Per Channel			UEP9E	M1HDO	0.00	14.48									
Interoffice Channel Mileage - 2-Wire																
	Interoffice Channel Facilities Termination			UEP9E	M1GBC	21.13	40.54	27.41	16.74	6.90						
	Interoffice Channel mileage, per mile or fraction of mile			UEP9E	M1GBM	0.008838										
Feature Activations (DS0) Centrex Loops on Channelized DS1 Service																
D4 Channel Bank Feature Activations																
	Feature Activation on D-4 Channel Bank Centrex Loop Slot			UEP9E	1PQWS	0.56										
	Feature Activation on D-4 Channel Bank FX line Side Loop Slot			UEP9E	1PQW6	0.56										
	Feature Activation on D-4 Channel Bank FX Trunk Side Loop Slot			UEP9E	1PQW7	0.56										
	Feature Activation on D-4 Channel Bank Centrex Loop Slot - Different Wire Center			UEP9E	1PQWP	0.56										
	Feature Activation on D-4 Channel Bank Private Line Loop Slot			UEP9E	1PQWV	0.56										
	Feature Activation on D-4 Channel Bank Tjie Line/Trunk Loop Slot			UEP9E	1PQWQ	0.56										
	Feature Activation on D-4 Channel Bank WATS Loop Slot			UEP9E	1PQWA	0.56										
Non-Recurring Charges (NRC) Associated with UNE-P Centrex																
	NRC Conversion Currently Combined Switch-As-Is with allowed changes, per port			UEP9E	USAC2		0.10	0.10								
	Conversion of Existing Centrex Common Block, each			UEP9E	USACN		37.75	16.58								
	New Centrex Standard Common Block			UEP9E	M1ACS	0.00	667.21									
	New Centrex Customized Common Block			UEP9E	M1ACC	0.00	667.21									
	NAR Establishment Charge, Per Occasion			UEP9E	URECA	0.00	72.73									
Additional Non-Recurring Charges (NRC)																
	Unbundled Miscellaneous Rate Element, Tag Loop at End Use Premise			UEP9E	URETL		8.33	0.83								
	Unbundled Miscellaneous Rate Element, Tag Design Loop at End Use Premise			UEP9E	URETN		11.21	1.10								
UNE-P CENTREX - DCO - Valid in AL, KY, LA, MS, & TN)																
2-Wire VG Loop/2-Wire Voice Grade Port (Centrex) Combo																
UNE Port/Loop Combination Rates (Non-Design)																
	2-Wire VG Loop/2-Wire Voice Grade Port (Centrex) Port Combo - Non-Design		1	UEP93		12.70										
	2-Wire VG Loop/2-Wire Voice Grade Port (Centrex)Port Combo - Non-Design		2	UEP93		21.19										
	2-Wire VG Loop/2-Wire Voice Grade Port (Centrex)Port Combo - Non-Design		3	UEP93		34.80										
UNE Port/Loop Combination Rates (Design)																
	2-Wire VG Loop/2-Wire Voice Grade Port (Centrex) Port Combo - Design		1	UEP93		15.53										
	2-Wire VG Loop/2-Wire Voice Grade Port (Centrex)Port Combo - Design		2	UEP93		24.00										
	2-Wire VG Loop/2-Wire Voice Grade Port (Centrex)Port Combo - Design		3	UEP93		37.29										
UNE Loop Rate																
	2-Wire Voice Grade Loop (SL 1) - Zone 1		1	UEP93	UECS1	11.55										
	2-Wire Voice Grade Loop (SL 1) - Zone 2		2	UEP93	UECS1	20.04										
	2-Wire Voice Grade Loop (SL 1) - Zone 3		3	UEP93	UECS1	33.65										
	2-Wire Voice Grade Loop (SL 2) - Zone 1		1	UEP93	UECS2	14.38										
	2-Wire Voice Grade Loop (SL 2) - Zone 2		2	UEP93	UECS2	22.85										
	2-Wire Voice Grade Loop (SL 2) - Zone 3		3	UEP93	UECS2	36.14										
UNE Port Rate																
AL, KY, LA, MS, & TN only																
	2-Wire Voice Grade Port (Centrex) Basic Local Area			UEP93	UEPYA	1.15	40.19	19.83	24.91	6.63						
	2-Wire Voice Grade Port (Centrex 800 termination)Basic Local Area			UEP93	UEPYB	1.15	40.19	19.83	24.91	6.63						

UNBUNDLED NETWORK ELEMENTS - Alabama														Attachment: 2		Exhibit: A	
CATEGORY		RATE ELEMENTS	Interim	Zone	BCS	USOC	RATES ($)					Svc Order Submitted Elec per LSR	Svc Order Submitted Manually per LSR	Incremental Charge - Manual Svc Order vs. Electronic-1st	Incremental Charge - Manual Svc Order vs. Electronic-Add'l	Incremental Charge - Manual Svc Order vs. Electronic-Disc 1st	Incremental Charge - Manual Svc Order vs. Electronic-Disc Add'l
							Rec	Nonrecurring		Nonrecurring Disconnect		OSS Rates ($)					
								First	Add'l	First	Add'l	SOMEC	SOMAN	SOMAN	SOMAN	SOMAN	SOMAN
		2-Wire Voice Grade Port (Centrex with Caller ID)1Basic Local Area			UEP93	UEPYH	1.15	40.19	19.83	24.91	6.63						
		2-Wire Voice Grade Port (Centrex from diff Serving Wire Center)2,3 Basic Local Area			UEP93	UEPYM	1.15	90.38	57.27	48.66	8.77						
		2-Wire Voice Grade Port, Diff Serving Wire Center - 2,3 - 800 Service Term - Basic Local Area			UEP93	UEPYZ	1.15	90.38	57.27	48.66	8.77						
		2-Wire Voice Grade Port terminated in on Megalink or equivalent - Basic Local Area			UEP93	UEPY9	1.15	40.19	19.83	24.91	6.63						
		2-Wire Voice Grade Port Terminated on 800 Service Term - Basic Local Area			UEP93	UEPY2	1.15	40.19	19.83	24.91	6.63						
		2-Wire Voice Grade Port (Centrex)			UEP93	UEPQA	1.15	40.19	19.83	24.91	6.63						
		2-Wire Voice Grade Port (Centrex 800 termination)			UEP93	UEPQB	1.15	40.19	19.83	24.91	6.63						
		2-Wire Voice Grade Port (Centrex with Caller ID)1			UEP93	UEPQH	1.15	40.19	19.83	24.91	6.63						
		2-Wire Voice Grade Port (Centrex from diff Serving Wire Center)2,3			UEP93	UEPQM	1.15	90.38	57.27	48.66	8.77						
		2-Wire Voice Grade Port, Diff Serving Wire Center - 2,3 -800 Service Term			UEP93	UEPQZ	1.15	90.38	57.27	48.66	8.77						
		2-Wire Voice Grade Port terminated in on Megalink or equivalent			UEP93	UEPQ9	1.15	40.19	19.83	24.91	6.63						
		2-Wire Voice Grade Port Terminated on 800 Service Term			UEP93	UEPQ2	1.15	40.19	19.83	24.91	6.63						
	Local Switching																
		Centrex Intercom Funtionality, per port			UEP93	URECS	0.5488										
	Local Number Portability																
		Local Number Portability (1 per port)			UEP93	LNPCC	0.35										
	Features																
		All Standard Features Offered, per port			UEP93	UEPVF	1.98										
		All Centrex Control Features Offered, per port			UEP93	UEPVC	1.98										
	NARS																
		Unbundled Network Access Register - Combination			UEP93	UARCX	0.00	0.00	0.00	0.00	0.00						
		Unbundled Network Access Register - Indial			UEP93	UAR1X	0.00	0.00	0.00	0.00	0.00						
		Unbundled Network Access Register - Outdial			UEP93	UAROX	0.00	0.00	0.00	0.00	0.00						
	Miscellaneous Terminations																
	2-Wire Trunk Side																
		Trunk Side Terminations, each			UEP93	CEND6	8.05	119.31	18.74	59.90	3.76						
	4-Wire Digital (1.544 Megabits)																
		DS1 Circuit Terminations, each			UEP93	M1HD1	60.09	202.02	95.69	72.59	2.46						
		DS0 Channels Activated, Per Channel			UEP93	M1HDO	0.00	14.48									
	Interoffice Channel Mileage - 2-Wire																
		Interoffice Channel Facilities Termination			UEP93	M1GBC	21.13	40.54	27.41	16.74	6.90						
		Interoffice Channel mileage, per mile or fraction of mile			UEP93	M1GBM	0.008838										
	Feature Activations (DS0) Centrex Loops on Channelized DS1 Service																
	D4 Channel Bank Feature Activations																
		Feature Activation on D-4 Channel Bank Centrex Loop Slot			UEP93	1PQWS	0.56										
		Feature Activation on D-4 Channel Bank FX Line Side Loop Slot			UEP93	1PQW6	0.56										
		Feature Activation on D-4 Channel Bank FX Trunk Side Loop Slot			UEP93	1PQW7	0.56										
		Feature Activation on D-4 Channel Bank Centrex Loop Slot - Different Wire Center			UEP93	1PQWP	0.56										
		Feature Activation on D-4 Channel Bank Private Line Loop Slot			UEP93	1PQWV	0.56										
		Feature Activation on D-4 Channel Bank Tie Line/Trunk Loop Slot			UEP93	1PQWQ	0.56										
		Feature Activation on D-4 Channel Bank WATS Loop Slot			UEP93	1PQWA	0.56										
	Non-Recurring Charges (NRC) Associated with UNE-P Centrex																
		NRC Conversion Currently Combined Switch-As-Is with allowed changes, per port			UEP93	USAC2		0.10	0.10								
		Conversion of Existing Centrex Common Block, each			UEP93	USACN		37.75	16.58								
		New Centrex Standard Common Block			UEP93	M1ACS	0.00	667.21									

UNBUNDLED NETWORK ELEMENTS - Alabama														Attachment: 2		Exhibit: A	
CATEGORY		RATE ELEMENTS	Interim	Zone	BCS	USOC	RATES ($)					Svc Order Submitted Elec per LSR	Svc Order Submitted Manually per LSR	Incremental Charge - Manual Svc Order vs. Electronic-1st	Incremental Charge - Manual Svc Order vs. Electronic-Add'l	Incremental Charge - Manual Svc Order vs. Electronic-Disc 1st	Incremental Charge - Manual Svc Order vs. Electronic-Disc Add'l
							Rec	Nonrecurring		Nonrecurring Disconnect		OSS Rates ($)					
								First	Add'l	First	Add'l	SOMEC	SOMAN	SOMAN	SOMAN	SOMAN	SOMAN
		New Centrex Customized Common Block			UEP93	M1ACC	0.00	667.21									
		NAR Establishment Charge, Per Occasion			UEP93	URECA	0.00	72.73									
	Additional Non-Recurring Charges (NRC)																
		Unbundled Miscellaneous Rate Element, Tag Loop at End Use Premise			UEP93	URETL		8.33	0.83								
		Unbundled Miscellaneous Rate Element, Tag Design Loop at End Use Premise			UEP93	URETN		11.21	1.10								
	Note 1 - Required Port for Centrex Control in 1AESS, 5ESS & EWSD																
	Note 2 - Requres Interoffice Channel Mileage																
	Note 3 - Installation is combination of Installation charge for SL2 Loop and Port																
	Note 4 - Requires Specific Customer Premises Equipment																
	Note: Rates displaying an "R" in Interim column are interim and subject to rate true-up as set forth in General Terms and Conditions.																

UNBUNDLED NETWORK ELEMENTS - Florida														Attachment: 2		Exhibit: A	
CATEGORY		RATE ELEMENTS	Interim	Zone	BCS	USOC	RATES ($)					Svc Order Submitted Elec per LSR	Svc Order Submitted Manually per LSR	Incremental Charge - Manual Svc Order vs. Electronic-1st	Incremental Charge - Manual Svc Order vs. Electronic-Add'l	Incremental Charge - Manual Svc Order vs. Electronic-Disc 1st	Incremental Charge - Manual Svc Order vs. Electronic-Disc Add'l
							Rec	Nonrecurring		Nonrecurring Disconnect		OSS Rates ($)					
								First	Add'l	First	Add'l	SOMEC	SOMAN	SOMAN	SOMAN	SOMAN	SOMAN
	The "Zone" shown in the sections for stand-alone loops or loops as part of a combination refers to Geographically Deaveraged UNE Zones. To view Geographically Deaveraged UNE Zone Designations by Central Office, refer to internet Website: http://www.interconnection.bellsouth.com/become_a_clec/html/interconnection.htm																
OPERATIONAL SUPPORT SYSTEMS (OSS) - "REGIONAL RATES"																	
	NOTE: (1) CLEC should contact its contract negotiator if it prefers the "state specific" OSS charges as ordered by the State Commissions. The OSS charges currently contained in this rate exhibit are the BellSouth "regional" service ordering charges. CLEC may elect either the state specific Commission ordered rates for the service ordering charges, or CLEC may elect the regional service ordering charge, however, CLEC can not obtain a mixture of the two regardless if CLEC has a interconnection contract established in each of the 9 states.																
	NOTE: (2) Any element that can be ordered electronically will be billed according to the SOMEC rate listed in this category. Please refer to BellSouth's Local Ordering Handbook (LOH) to determine if a product can be ordered electronically. For those elements that cannot be ordered electronically at present per the LOH, the listed SOMEC rate in this category reflects the charge that would be billed to a CLEC once electronic ordering capabilities come on-line for that element. Otherwise, the manual ordering charge, SOMAN, will be applied to a CLECs bill when it submits an LSR to BellSouth.																
		OSS - Electronic Service Order Charge, Per Local Service Request (LSR) - UNE Only				SOMEC		3.50	0.00	3.50	0.00						
		OSS - Manual Service Order Charge, Per Local Service Request (LSR) - UNE Only				SOMAN		11.90	0.00	1.83	0.00						
UNE SERVICE DATE ADVANCEMENT CHARGE																	
	NOTE: The Expedite charge will be maintained commensurate with BellSouth's FCC No.1 Tariff, Section 5 as applicable.																
		UNE Expedite Charge per Circuit or Line Assignable USOC, per Day			UAL, UEANL, UCL, UEF, UDF, UEQ, UDL, UENTW, UDN, UEA, UHL, ULC, USL, U1T12, U1T48, U1TD1, U1TD3, U1TDX, U1TO3, U1TS1, U1TVX, UC1BC, UC1BL, UC1CC, UC1CL, UC1DC, UC1DL, UC1EC, UC1EL, UC1FC, UC1FL, UC1GC, UC1GL, UC1HC, UC1HL, UDL12, UDL48, UDLO3, UDLSX, UE3, ULD12, ULD48, ULDD1, ULDD3, ULDDX, ULDO3, ULDS1, ULDVX, UNC1X, UNC3X, UNCDX, UNCNX, UNCSX, UNCVX, UNLD1, UNLD3, UXTD1, UXTD3, UXTS1, U1TUC, U1TUD, U1TUB, U1TUA	SDASP		200.00									
UNBUNDLED EXCHANGE ACCESS LOOP																	
	2-WIRE ANALOG VOICE GRADE LOOP																
		2-Wire Analog Voice Grade Loop - Service Level 1- Zone 1		1	UEANL	UEAL2	10.69	49.57	22.83	25.62	6.57						
		2-Wire Analog Voice Grade Loop - Service Level 1- Zone 2		2	UEANL	UEAL2	15.20	49.57	22.83	25.62	6.57						
		2-Wire Analog Voice Grade Loop - Service Level 1- Zone 3		3	UEANL	UEAL2	26.97	49.57	22.83	25.62	6.57						
		2-Wire Analog Voice Grade Loop - Service Level 1- Zone 1		1	UEANL	UEASL	10.69	49.57	22.83	25.62	6.57						
		2-Wire Analog Voice Grade Loop - Service Level 1- Zone 2		2	UEANL	UEASL	15.20	49.57	22.83	25.62	6.57						
		2-Wire Analog Voice Grade Loop - Service Level 1- Zone 3		3	UEANL	UEASL	26.97	49.57	22.83	25.62	6.57						
		Unbundled Miscellaneous Rate Element, Tag Loop at End User Premise			UEANL	URETL		8.33	0.83								
		Loop Testing - Basic 1st Half Hour			UEANL	URET1		48.65	48.65								
		Loop Testing - Basic Additional Half Hour			UEANL	URETA		23.95	23.95								

UNBUNDLED NETWORK ELEMENTS - Florida														Attachment: 2		Exhibit: A	
CATEGORY		RATE ELEMENTS	Interim	Zone	BCS	USOC	RATES ($)					Svc Order Submitted Elec per LSR	Svc Order Submitted Manually per LSR	Incremental Charge - Manual Svc Order vs. Electronic-1st	Incremental Charge - Manual Svc Order vs. Electronic-Add'l	Incremental Charge - Manual Svc Order vs. Electronic-Disc 1st	Incremental Charge - Manual Svc Order vs. Electronic-Disc Add'l
							Rec	Nonrecurring		Nonrecurring Disconnect		OSS Rates ($)					
								First	Add'l	First	Add'l	SOMEC	SOMAN	SOMAN	SOMAN	SOMAN	SOMAN
		CLEC to CLEC Conversion Charge Without Outside Dispatch (UVL-SL1)			UEANL	UREWO		15.78	8.94								
		Unbundled Voice Loop, Non-Design Voice Loop, billing for BST providing make-up (Engineering Information - E.I.)			UEANL	UEANM		13.49									
		Manual Order Coordination for UVL-SL1s (per loop)			UEANL	UEAMC		9.00	9.00								
		Order Coordination for Specified Conversion Time for UVL-SL1 (per LSR)			UEANL	OCOSL		23.02									
	2-WIRE Unbundled COPPER LOOP																
		2-Wire Unbundled Copper Loop - Non-Designed Zone 1	I	1	UEQ	UEQ2X	7.69	44.98	20.90	19.65	5.09						
		2 Wire Unbundled Copper Loop - Non-Designed - Zone 2	I	2	UEQ	UEQ2X	10.92	44.98	20.90	19.65	5.09						
		2 Wire Unbundled Copper Loop - Non-Designed - Zone 3	I	3	UEQ	UEQ2X	19.38	44.98	20.90	19.65	5.09						
		Unbundled Miscellaneous Rate Element, Tag Loop at End User Premise			UEQ	URETL		8.33	0.83								
		Manual Order Coordination 2 Wire Unbundled Copper Loop - Non-Designed (per loop)			UEQ	USBMC		9.00									
		Unbundled Copper Loop, Non-Design Cooper Loop, billing for BST providing make-up (Engineering Information - E.I.)			UEQ	UEQMU		13.49									
		Loop Testing - Basic 1st Half Hour			UEQ	URET1		48.65	48.65								
		Loop Testing - Basic Additional Half Hour			UEQ	URETA		23.95	23.95								
		CLEC to CLEC Conversion Charge Without Outside Dispatch (UCL-ND)			UEQ	UREWO		14.27	7.43								
UNBUNDLED EXCHANGE ACCESS LOOP																	
	2-WIRE ANALOG VOICE GRADE LOOP																
		2 Wire Analog Voice Grade Loop-Service Level 1-Line Splitting-Zone 1		1	UEPSR UEPSB	UEALS	10.69	49.57	22.83	25.62	6.57						
		2 Wire Analog Voice Grade Loop-Service Level 1-Line Splitting-Zone 1		1	UEPSR UEPSB	UEABS	10.69	49.57	22.83	25.62	6.57						
		2 Wire Analog Voice Grade Loop- Service Level 1-Line Splitting-Zone 2		2	UEPSR UEPSB	UEALS	15.20	49.57	22.83	25.62	6.57						
		2 Wire Analog Voice Grade Loop- Service Level 1-Line Splitting-Zone 2		2	UEPSR UEPSB	UEABS	15.20	49.57	22.83	25.62	6.57						
		2 Wire Analog Voice Grade Loop-Service Level 1-Line Splitting-Zone 3		3	UEPSR UEPSB	UEALS	26.97	49.57	22.83	25.62	6.57						
		2 Wire Analog Voice Grade Loop-Service Level 1-Line Splitting-Zone 3		3	UEPSR UEPSB	UEABS	26.97	49.57	22.83	25.62	6.57						
UNBUNDLED EXCHANGE ACCESS LOOP																	
	2-WIRE ANALOG VOICE GRADE LOOP																
		2-Wire Analog Voice Grade Loop - Service Level 2 w/Loop or Ground Start Signaling - Zone 1		1	UEA	UEAL2	12.24	135.75	82.47	63.53	12.01						
		2-Wire Analog Voice Grade Loop - Service Level 2 w/Loop or Ground Start Signaling - Zone 2		2	UEA	UEAL2	17.40	135.75	82.47	63.53	12.01						
		2-Wire Analog Voice Grade Loop - Service Level 2 w/Loop or Ground Start Signaling - Zone 3		3	UEA	UEAL2	30.87	135.75	82.47	63.53	12.01						
		Order Coordination for Specified Conversion Time (per LSR)			UEA	OCOSL		23.02									
		2-Wire Analog Voice Grade Loop - Service Level 2 w/Reverse Battery Signaling - Zone 1		1	UEA	UEAR2	12.24	135.75	82.47	63.53	12.01						
		2-Wire Analog Voice Grade Loop - Service Level 2 w/Reverse Battery Signaling - Zone 2		2	UEA	UEAR2	17.40	135.75	82.47	63.53	12.01						
		2-Wire Analog Voice Grade Loop - Service Level 2 w/Reverse Battery Signaling - Zone 3		3	UEA	UEAR2	30.87	135.75	82.47	63.53	12.01						
		Order Coordination for Specified Conversion Time (per LSR)			UEA	OCOSL		23.02									
		CLEC to CLEC Conversion Charge without outside dispatch			UEA	UREWO		87.71	36.35								
		Loop Tagging - Service Level 2 (SL2)			UEA	URETL		11.21	1.10								
	4-WIRE ANALOG VOICE GRADE LOOP																
		4-Wire Analog Voice Grade Loop - Zone 1		1	UEA	UEAL4	18.89	167.86	115.15	67.08	15.56						
		4-Wire Analog Voice Grade Loop - Zone 2		2	UEA	UEAL4	26.84	167.86	115.15	67.08	15.56						
		4-Wire Analog Voice Grade Loop - Zone 3		3	UEA	UEAL4	47.62	167.86	115.15	67.08	15.56						
		Order Coordination for Specified Conversion Time (per LSR)			UEA	OCOSL		23.02									
		CLEC to CLEC Conversion Charge without outside dispatch			UEA	UREWO		87.71	36.35								

UNBUNDLED NETWORK ELEMENTS - Florida														Attachment: 2		Exhibit: A	
CATEGORY		RATE ELEMENTS	Interim	Zone	BCS	USOC	RATES ($)					Svc Order Submitted Elec per LSR	Svc Order Submitted Manually per LSR	Incremental Charge - Manual Svc Order vs. Electronic-1st	Incremental Charge - Manual Svc Order vs. Electronic-Add'l	Incremental Charge - Manual Svc Order vs. Electronic-Disc 1st	Incremental Charge - Manual Svc Order vs. Electronic-Disc Add'l
							Rec	Nonrecurring		Nonrecurring Disconnect		OSS Rates ($)					
								First	Add'l	First	Add'l	SOMEC	SOMAN	SOMAN	SOMAN	SOMAN	SOMAN
	2-WIRE ISDN DIGITAL GRADE LOOP																
		2-Wire ISDN Digital Grade Loop - Zone 1		1	UDN	U1L2X	19.28	147.69	94.41	62.23	10.71						
		2-Wire ISDN Digital Grade Loop - Zone 2		2	UDN	U1L2X	27.40	147.69	94.41	62.23	10.71						
		2-Wire ISDN Digital Grade Loop - Zone 3		3	UDN	U1L2X	48.62	147.69	94.41	62.23	10.71						
		Order Coordination For Specified Conversion Time (per LSR)			UDN	OCOSL		23.02									
		CLEC to CLEC Conversion Charge without outside dispatch			UDN	UREWO		91.61	44.15								
	2-WIRE ASYMMETRICAL DIGITAL SUBSCRIBER LINE (ADSL) COMPATIBLE LOOP																
		2 Wire Unbundled ADSL Loop including manual service inquiry & facility reservation - Zone 1		1	UAL	UAL2X	8.30	149.53	103.85	75.05	15.63						
		2 Wire Unbundled ADSL Loop including manual service inquiry & facility reservation - Zone 2		2	UAL	UAL2X	11.80	149.53	103.85	75.05	15.63						
		2 Wire Unbundled ADSL Loop including manual service inquiry & facility reservation - Zone 3		3	UAL	UAL2X	20.94	149.53	103.85	75.05	15.63						
		Order Coordination for Specified Conversion Time (per LSR)			UAL	OCOSL		23.02									
		2 Wire Unbundled ADSL Loop without manual service inquiry & facility reservaton - Zone 1		1	UAL	UAL2W	8.30	124.83	71.12	60.64	9.12						
		2 Wire Unbundled ADSL Loop without manual service inquiry & facility reservaton - Zone 2		2	UAL	UAL2W	11.80	124.83	71.12	60.64	9.12						
		2 Wire Unbundled ADSL Loop without manual service inquiry & facility reservaton - Zone 3		3	UAL	UAL2W	20.94	124.83	71.12	60.64	9.12						
		Order Coordination for Specified Conversion Time (per LSR)			UAL	OCOSL		23.02									
		CLEC to CLEC Conversion Charge without outside dispatch			UAL	UREWO		86.19	40.39								
	2-WIRE HIGH BIT RATE DIGITAL SUBSCRIBER LINE (HDSL) COMPATIBLE LOOP																
		2 Wire Unbundled HDSL Loop including manual service inquiry & facility reservation - Zone 1		1	UHL	UHL2X	7.22	159.09	113.41	75.05	15.63						
		2 Wire Unbundled HDSL Loop including manual service inquiry & facility reservation - Zone 2		2	UHL	UHL2X	10.26	159.09	113.41	75.05	15.63						
		2 Wire Unbundled HDSL Loop including manual service inquiry & facility reservation - Zone 3		3	UHL	UHL2X	18.21	159.09	113.41	75.05	15.63						
		Order Coordination for Specified Conversion Time (per LSR)			UHL	OCOSL		23.02									
		2 Wire Unbundled HDSL Loop without manual service inquiry and facility reservation - Zone 1		1	UHL	UHL2W	7.22	134.40	80.69	60.64	9.12						
		2 Wire Unbundled HDSL Loop without manual service inquiry and facility reservation - Zone 2		2	UHL	UHL2W	10.26	134.40	80.69	60.64	9.12						
		2 Wire Unbundled HDSL Loop without manual service inquiry and facility reservation - Zone 3		3	UHL	UHL2W	18.21	134.40	80.69	60.64	9.12						
		Order Coordination for Specified Conversion Time (per LSR)			UHL	OCOSL		23.02									
		CLEC to CLEC Conversion Charge without outside dispatch			UHL	UREWO		86.12	40.39								
	4-WIRE HIGH BIT RATE DIGITAL SUBSCRIBER LINE (HDSL) COMPATIBLE LOOP																
		4 Wire Unbundled HDSL Loop including manual service inquiry and facility reservation - Zone 1		1	UHL	UHL4X	10.86	193.31	138.98	77.15	12.61						
		4-Wire Unbundled HDSL Loop including manual service inquiry and facility reservation - Zone 2		2	UHL	UHL4X	15.44	193.31	138.98	77.15	12.61						
		4-Wire Unbundled HDSL Loop including manual service inquiry and facility reservation - Zone 3		3	UHL	UHL4X	27.39	193.31	138.98	77.15	12.61						
		Order Coordination for Specified Conversion Time (per LSR)			UHL	OCOSL		23.02									
		4-Wire Unbundled HDSL Loop without manual service inquiry and facility reservation - Zone 1		1	UHL	UHL4W	10.86	168.62	115.47	62.74	11.22						
		4-Wire Unbundled HDSL Loop without manual service inquiry and facility reservation - Zone 2		2	UHL	UHL4W	15.44	168.62	115.47	62.74	11.22						
		4-Wire Unbundled HDSL Loop without manual service inquiry and facility reservation - Zone 3		3	UHL	UHL4W	27.39	168.62	115.47	62.74	11.22						
		Order Coordination for Specified Conversion Time (per LSR)			UHL	OCOSL		23.02									
		CLEC to CLEC Conversion Charge without outside dispatch			UHL	UREWO		86.12	40.39								
	4-WIRE DS1 DIGITAL LOOP																
		4-Wire DS1 Digital Loop - Zone 1		1	USL	USLXX	70.74	313.75	181.48	61.22	13.53						
		4-Wire DS1 Digital Loop - Zone 2		2	USL	USLXX	100.54	313.75	181.48	61.22	13.53						
		4-Wire DS1 Digital Loop - Zone 3		3	USL	USLXX	178.39	313.75	181.48	61.22	13.53						
		Order Coordination for Specified Conversion Time (per LSR)			USL	OCOSL		23.02									

UNBUNDLED NETWORK ELEMENTS - Florida														Attachment: 2		Exhibit: A	
CATEGORY		RATE ELEMENTS	Interim	Zone	BCS	USOC	RATES ($)					Svc Order Submitted Elec per LSR	Svc Order Submitted Manually per LSR	Incremental Charge - Manual Svc Order vs. Electronic-1st	Incremental Charge - Manual Svc Order vs. Electronic-Add'l	Incremental Charge - Manual Svc Order vs. Electronic-Disc 1st	Incremental Charge - Manual Svc Order vs. Electronic-Disc Add'l
							Rec	Nonrecurring		Nonrecurring Disconnect		OSS Rates ($)					
								First	Add'l	First	Add'l	SOMEC	SOMAN	SOMAN	SOMAN	SOMAN	SOMAN
		CLEC to CLEC Conversion Charge without outside dispatch			USL	UREWO		101.07	43.04								
	4-WIRE 19.2, 56 OR 64 KBPS DIGITAL GRADE LOOP																
		4 Wire Unbundled Digital 19.2 Kbps		1	UDL	UDL19	22.20	161.56	108.85	67.08	15.56						
		4 Wire Unbundled Digital 19.2 Kbps		2	UDL	UDL19	31.56	161.56	108.85	67.08	15.56						
		4 Wire Unbundled Digital 19.2 Kbps		3	UDL	UDL19	55.99	161.56	108.85	67.08	15.56						
		4 Wire Unbundled Digital Loop 56 Kbps - Zone 1		1	UDL	UDL56	22.20	161.56	108.85	67.08	15.56						
		4 Wire Unbundled Digital Loop 56 Kbps - Zone 2		2	UDL	UDL56	31.56	161.56	108.85	67.08	15.56						
		4 Wire Unbundled Digital Loop 56 Kbps - Zone 3		3	UDL	UDL56	55.99	161.56	108.85	67.08	15.56						
		Order Coordination for Specified Conversion Time (per LSR)			UDL	OCOSL		23.02									
		4 Wire Unbundled Digital Loop 64 Kbps - Zone 1		1	UDL	UDL64	22.20	161.56	108.85	67.08	15.56						
		4 Wire Unbundled Digital Loop 64 Kbps - Zone 2		2	UDL	UDL64	31.56	161.56	108.85	67.08	15.56						
		4 Wire Unbundled Digital Loop 64 Kbps - Zone 3		3	UDL	UDL64	55.99	161.56	108.85	67.08	15.56						
		Order Coordination for Specified Conversion Time (per LSR)			UDL	OCOSL		23.02									
		CLEC to CLEC Conversion Charge without outside dispatch			UDL	UREWO		102.11	49.74								
	2-WIRE Unbundled COPPER LOOP																
		2-Wire Unbundled Copper Loop-Designed including manual service inquiry & facility reservation - Zone 1		1	UCL	UCLPB	8.30	148.50	102.82	75.05	15.63						
		2-Wire Unbundled Copper Loop-Designed including manual service inquiry & facility reservation - Zone 2		2	UCL	UCLPB	11.80	148.50	102.82	75.05	15.63						
		2 Wire Unbundled Copper Loop-Designed including manual service inquiry & facility reservation - Zone 3		3	UCL	UCLPB	20.94	148.50	102.82	75.05	15.63						
		Order Coordination for Unbundled Copper Loops (per loop)			UCL	UCLMC		9.00	9.00								
		2-Wire Unbundled Copper Loop-Designed without manual service inquiry and facility reservation - Zone 1		1	UCL	UCLPW	8.30	123.81	70.09	60.64	9.12						
		2-Wire Unbundled Copper Loop-Designed without manual service inquiry and facility reservation - Zone 2		2	UCL	UCLPW	11.80	123.81	70.09	60.64	9.12						
		2-Wire Unbundled Copper Loop-Designed without manual service inquiry and facility reservation - Zone 3		3	UCL	UCLPW	20.94	123.81	70.09	60.64	9.12						
		Order Coordination for Unbundled Copper Loops (per loop)			UCL	UCLMC		9.00	9.00								
		CLEC to CLEC Conversion Charge without outside dispatch (UCL -Des)			UCL	UREWO		97.21	42.47								
	4-WIRE COPPER LOOP																
		4-Wire Copper Loop-Designed including manual service inquiry and facility reservation - Zone 1		1	UCL	UCL4S	11.83	177.87	132.76	77.15	17.73						
		4-Wire Copper Loop-Designed including manual service inquiry and facility reservation - Zone 2		2	UCL	UCL4S	16.81	177.87	132.76	77.15	17.73						
		4-Wire Copper Loop-Designed including manual service inquiry and facility reservation - Zone 3		3	UCL	UCL4S	29.82	177.87	132.76	77.15	17.73						
		Order Coordination for Unbundled Copper Loops (per loop)			UCL	UCLMC		9.00	9.00								
		4-Wire Copper Loop-Designed without manual service inquiry and facility reservation - Zone 1		1	UCL	UCL4W	11.83	153.18	100.03	62.74	11.22						
		4-Wire Copper Loop-Designed without manual service inquiry and facility reservation - Zone 2		2	UCL	UCL4W	16.81	153.18	100.03	62.74	11.22						
		4-Wire Copper Loop-Designed without manual service inquiry and facility reservation - Zone 3		3	UCL	UCL4W	29.82	153.18	100.03	62.74	11.22						
		Order Coordination for Unbundled Copper Loops (per loop)			UCL	UCLMC		9.00	9.00								
		CLEC to CLEC Conversion Charge without outside dispatch			UCL	UREWO		97.21	42.47								
LOOP MODIFICATION																	
		Unbundled Loop Modification, Removal of Load Coils - 2 Wire pair less than or equal to 18k ft, per Unbundled Loop			UAL, UHL, UCL, UEQ, ULS, UEA, UEANL, UEPSR, UEPSB	ULM2L		0.00	0.00								
		Unbundled Loop Modification Removal of Load Coils - 4 Wire less than or equal to 18K ft, per Unbundled Loop			UHL, UCL, UEA	ULM4L		0.00	0.00								
		Unbundled Loop Modification Removal of Bridged Tap Removal, per unbundled loop			UAL, UHL, UCL, UEQ, ULS, UEA, UEANL, UEPSR, UEPSB	ULMBT		10.52	10.52								
SUB-LOOPS																	

UNBUNDLED NETWORK ELEMENTS - Florida														Attachment: 2		Exhibit: A	
CATEGORY		RATE ELEMENTS	Interim	Zone	BCS	USOC	RATES ($)					Svc Order Submitted Elec per LSR	Svc Order Submitted Manually per LSR	Incremental Charge - Manual Svc Order vs. Electronic-1st	Incremental Charge - Manual Svc Order vs. Electronic-Add'l	Incremental Charge - Manual Svc Order vs. Electronic-Disc 1st	Incremental Charge - Manual Svc Order vs. Electronic-Disc Add'l
							Rec	Nonrecurring		Nonrecurring Disconnect		OSS Rates ($)					
								First	Add'l	First	Add'l	SOMEC	SOMAN	SOMAN	SOMAN	SOMAN	SOMAN
	Sub-Loop Distribution																
		Sub-Loop - Per Cross Box Location - CLEC Feeder Facility Set-Up	I		UEANL	USBSA		487.23									
		Sub-Loop - Per Cross Box Location - Per 25 Pair Panel Set-Up	I		UEANL	USBSB		6.25									
		Sub-Loop - Per Building Equipment Room - CLEC Feeder Facility Set-Up	I		UEANL	USBSC		169.25									
		Sub-Loop - Per Building Equipment Room - Per 25 Pair Panel Set-Up	I		UEANL	USBSD		38.65									
		Sub-Loop Distribution Per 2-Wire Analog Voice Grade Loop - Zone 1		1	UEANL	USBN2	6.46	60.19	21.78	47.50	5.26						
		Sub-Loop Distribution Per 2-Wire Analog Voice Grade Loop - Zone 2		2	UEANL	USBN2	9.18	60.19	21.78	47.50	5.26						
		Sub-Loop Distribution Per 2-Wire Analog Voice Grade Loop - Zone 3		3	UEANL	USBN2	16.29	60.19	21.78	47.50	5.26						
		Order Coordination for Unbundled Sub-Loops, per sub-loop pair			UEANL	USBMC		9.00	9.00								
		Sub-Loop Distribution Per 4-Wire Analog Voice Grade Loop - Zone 1		1	UEANL	USBN4	7.37	68.83	30.42	49.71	6.60						
		Sub-Loop Distribution Per 4-Wire Analog Voice Grade Loop - Zone 2		2	UEANL	USBN4	10.47	68.83	30.42	49.71	6.60						
		Sub-Loop Distribution Per 4-Wire Analog Voice Grade Loop - Zone 3		3	UEANL	USBN4	18.58	68.83	30.42	49.71	6.60						
		Order Coordination for Unbundled Sub-Loops, per sub-loop pair			UEANL	USBMC		9.00	9.00								
		Sub-Loop 2-Wire Intrabuilding Network Cable (INC)	I		UEANL	USBR2	3.96	51.84	13.44	47.50	5.26						
		Order Coordination for Unbundled Sub-Loops, per sub-loop pair			UEANL	USBMC		9.00	9.00								
		Sub-Loop 4-Wire Intrabuilding Network Cable (INC)	I		UEANL	USBR4	9.37	55.91	17.51	49.71	6.60						
		Order Coordination for Unbundled Sub-Loops, per sub-loop pair			UEANL	USBMC		9.00	9.00								
		Loop Testing - Basic 1st Half Hour			UEANL	URET1		48.65	48.65								
		Loop Testing - Basic Additional Half Hour			UEANL	URETA		23.95	23.95								
		2 Wire Copper Unbundled Sub-Loop Distribution - Zone 1	I	1	UEF	UCS2X	5.15	60.19	21.78	47.50	5.26						
		2 Wire Copper Unbundled Sub-Loop Distribution - Zone 2	I	2	UEF	UCS2X	7.31	60.19	21.78	47.50	5.26						
		2 Wire Copper Unbundled Sub-Loop Distribution - Zone 3	I	3	UEF	UCS2X	12.98	60.19	21.78	47.50	5.26						
		Order Coordination for Unbundled Sub-Loops, per sub-loop pair			UEF	USBMC		9.00	9.00								
		4 Wire Copper Unbundled Sub-Loop Distribution - Zone 1	I	1	UEF	UCS4X	5.36	68.83	30.42	49.71	6.60						
		4 Wire Copper Unbundled Sub-Loop Distribution - Zone 2	I	2	UEF	UCS4X	7.61	68.83	30.42	49.71	6.60						
		4 Wire Copper Unbundled Sub-Loop Distribution - Zone 3	I	3	UEF	UCS4X	13.51	68.83	30.42	49.71	6.60						
		Order Coordination for Unbundled Sub-Loops, per sub-loop pair			UEF	USBMC		9.00	9.00								
		Loop Testing - Basic 1st Half Hour			UEF	URET1		48.65	48.65								
		Loop Testing - Basic Additional Half Hour			UEF	URETA		23.95	23.95								
	Unbundled Network Terminating Wire (UNTW)																
		Unbundled Network Terminating Wire (UNTW) per Pair			UENTW	UENPP	0.4572	18.02									
	Network Interface Device (NID)																
		Network Interface Device (NID) - 1-2 lines			UENTW	UND12		71.49	48.87								
		Network Interface Device (NID) - 1-6 lines			UENTW	UND16		113.89	89.07								
		Network Interface Device Cross Connect - 2 W			UENTW	UNDC2		7.63	7.63								
		Network Interface Device Cross Connect - 4W			UENTW	UNDC4		7.63	7.63								
UNE OTHER, PROVISIONING ONLY - NO RATE																	
		NID - Dispatch and Service Order for NID installation			UENTW	UNDBX	0.00	0.00									
		UNTW Circuit Id Establishment, Provisioning Only - No Rate			UENTW	UENCE	0.00	0.00									
		Unbundled Contract Name, Provisioning Only - No Rate			UEANL,UEF,UEQ,UENTW	UNECN	0.00	0.00									
UNE OTHER, PROVISIONING ONLY - NO RATE																	

UNBUNDLED NETWORK ELEMENTS - Florida														Attachment: 2		Exhibit: A	
CATEGORY		RATE ELEMENTS	Interim	Zone	BCS	USOC	RATES ($)					Svc Order Submitted Elec per LSR	Svc Order Submitted Manually per LSR	Incremental Charge - Manual Svc Order vs. Electronic-1st	Incremental Charge - Manual Svc Order vs. Electronic-Add'l	Incremental Charge - Manual Svc Order vs. Electronic-Disc 1st	Incremental Charge - Manual Svc Order vs. Electronic-Disc Add'l
							Rec	Nonrecurring		Nonrecurring Disconnect		OSS Rates ($)					
								First	Add'l	First	Add'l	SOMEC	SOMAN	SOMAN	SOMAN	SOMAN	SOMAN
		Unbundled Contact Name, Provisioning Only - no rate			UAL,UCL,UDC,UDL, UDN,UEA,UHL,ULC	UNECN	0.00	0.00									
		Unbundled Sub-Loop Feeder-2 Wire Cross Box Jumper - no rate			UEA,UDN,UCL,UDC	USBFQ	0.00	0.00									
		Unbundled Sub-Loop Feeder-4 Wire Cross Box Jumper - no rate			UEA,USL,UCL,UDL	USBFR	0.00	0.00									
		Unbundled DS1 Loop - Superframe Format Option - no rate			USL	CCOSF	0.00	0.00									
		Unbundled DS1 Loop - Expanded Superframe Format option - no rate			USL	CCOEF	0.00	0.00									
HIGH CAPACITY UNBUNDLED LOCAL LOOP																	
		High Capacity Unbundled Local Loop - DS3 - Per Mile per month			UE3	1L5ND	10.92										
		High Capacity Unbundled Local Loop - DS3 - Facility Termination per month			UE3	UE3PX	386.88	556.37	343.01	139.13	96.84						
		High Capacity Unbundled Local Loop - STS-1 - Per Mile per month			UDLSX	1L5ND	10.92										
		High Capacity Unbundled Local Loop - STS-1 - Facility Termination per month			UDLSX	UDLS1	426.60	556.37	343.01	139.13	96.84						
LOOP MAKE-UP																	
		Loop Makeup - Preordering Without Reservation, per working or spare facility queried (Manual).			UMK	UMKLW		52.17	52.17								
		Loop Makeup - Preordering With Reservation, per spare facility queried (Manual).			UMK	UMKLP		55.07	55.07								
		Loop Makeup--With or Without Reservation, per working or spare facility queried (Mechanized)			UMK	UMKMQ		0.6784	0.6784								
LINE SHARING AND LINE SPLITTING																	
	NOTE 1: The Line Sharing monthly recurring rates for all installations completed from October 02, 2003 through midnight October 01, 2004 shall be billed as follows:																
	NOTE 1: 10/02/2003 – 10/01/2004: 25% of the rate for an unbundled copper loop non-designed ("UCLND")																
	NOTE 1: 10/02/2004 – 10/01/2005: 50% of the rate for UCLND																
	NOTE 1: 10/02/2005 – 10/01/2006: 75% of the rate for UCLND																
	NOTE 1: Above will apply to USOCS: ULSDT and ULSCT																
	****NOTE 2: The Line Sharing monthly recurring rates with USOCs ULSDC and ULSCC applies only to circuits installed and inservice on or before October 1, 2003**																
	LINE SHARING																
	SPLITTERS-CENTRAL OFFICE BASED																
		Line Sharing Splitter, per System 96 Line Capacity			ULS	ULSDA	119.72	379.13	0.00	347.90	0.00						
		Line Sharing Splitter, per System 24 Line Capacity			ULS	ULSDB	29.93	379.13	0.00	347.90	0.00						
		Line Sharing Splitter, Per System, 8 Line Capacity			ULS	ULSD8	8.33	379.13	0.00	347.90	0.00						
		Line Sharing-DLEC Owned Splitter in CO-CFA activaton-deactivation (per LSOD)			ULS	ULSDG		173.66	0.00	97.42	0.00						
	END USER ORDERING-CENTRAL OFFICE BASED LINE SHARING																
		Line Sharing - per Line Activation (BST Owned splitter) - OBSOLETE see **NOTE 2			ULS	ULSDC	0.61	29.68	21.28	19.57	9.61						
		Line Share Service, TRO per line activation, BST owned splitter - Central Office Located (25% of UCLND) - please see NOTE 1 (E:10/2/2003)			ULS	ULSDT	1.99	29.68	21.28	19.57	9.61						
		Line Share Service, TRO per line activation, BST owned splitter - Central Office Located (50% of UCLND) - please see NOTE 1 (E:10/2/2004)			ULS	ULSDT	3.98	29.68	21.28	19.57	9.61						
		Line Share Service, TRO per line activation, BST owned splitter - Central Office Located (75% of UCLND) - please see NOTE 1 (E:10/2/2005)			ULS	ULSDT	5.97	29.68	21.28	19.57	9.61						
		Line Sharing - per Subsequent Activity per Line Rearrangement - (BST Owned Splitter)			ULS	ULSDS		21.68	16.44								
		Line Sharing - per Subsequent Activity per Line Rearrangement - (DLEC Owned Splitter)			ULS	ULSCS		21.68	16.44								
		Line Sharing - per Line Activation (DLEC owned Splitter) - OBSOLETE see **NOTE 2			ULS	ULSCC	0.61	47.44	19.31	20.67	12.74						

UNBUNDLED NETWORK ELEMENTS - Florida														Attachment: 2		Exhibit: A	
CATEGORY		RATE ELEMENTS	Interim	Zone	BCS	USOC	RATES ($)					Svc Order Submitted Elec per LSR	Svc Order Submitted Manually per LSR	Incremental Charge - Manual Svc Order vs. Electronic-1st	Incremental Charge - Manual Svc Order vs. Electronic-Add'l	Incremental Charge - Manual Svc Order vs. Electronic-Disc 1st	Incremental Charge - Manual Svc Order vs. Electronic-Disc Add'l
							Rec	Nonrecurring		Nonrecurring Disconnect		OSS Rates ($)					
								First	Add'l	First	Add'l	SOMEC	SOMAN	SOMAN	SOMAN	SOMAN	SOMAN
		Line Share Service, TRO per line activation, CLEC owned splitter - Central Office Located (25% of UCLND) - please see NOTE 1 (E:10/2/2003)			ULS	ULSCT	1.99	47.44	19.31	20.67	12.74						
		Line Share Service, TRO per line activation, CLEC owned splitter - Central Office Located (50% of UCLND) - please see NOTE 1 (E:10/2/2004)			ULS	ULSCT	3.98	47.44	19.31	20.67	12.74						
		Line Share Service, TRO per line activation, CLEC owned splitter - Central Office Located (75% of UCLND) - please see NOTE 1 (E:10/2/2005)			ULS	ULSCT	5.97	47.44	19.31	20.67	12.74						
	LINE SPLITTING																
	END USER ORDERING-CENTRAL OFFICE BASED																
		Line Splitting - per line activation DLEC owned splitter			UEPSR UEPSB	UREOS	0.61										
		Line Splitting - per line activation BST owned - physical			UEPSR UEPSB	UREBP	0.61	29.68	21.28	19.57	9.61						
		Line Splitting - per line activation BST owned - virtual			UEPSR UEPSB	UREBV	1.134	29.68	21.28	19.57	9.61						
	MAINTENANCE																
		No Trouble Found - per 1/2 hour increments - Basic						80.00	55.00								
		No Trouble Found - per 1/2 hour increments - Overtime						120.00	82.50								
		No Trouble Found - per 1/2 hour increments - Premium						160.00	110.00								
UNBUNDLED DEDICATED TRANSPORT																	
	INTEROFFICE CHANNEL - DEDICATED TRANSPORT																
		Interoffice Channel - Dedicated Transport - 2-Wire Voice Grade - Per Mile per month			U1TVX	1L5XX	0.0091										
		Interoffice Channel - Dedicated Transport- 2- Wire Voice Grade - Facility Termination			U1TVX	U1TV2	25.32	47.35	31.78	18.31	7.03						
		Interoffice Channel - Dedicated Transpor t- 2-Wire Voice Grade Rev Bat. - Per Mile per month			U1TVX	1L5XX	0.0091										
		Interoffice Channel - Dedicated Transport- 2- Wire VG Rev Bat. - Facility Termination			U1TVX	U1TR2	25.32	47.35	31.78	18.31	7.03						
		Interoffice Channel - Dedicated Transport - 4-Wire Voice Grade - Per Mile per month			U1TVX	1L5XX	0.0091										
		Interoffice Channel - Dedicated Transport - 4- Wire Voice Grade - Facility Termination			U1TVX	U1TV4	22.58	47.35	31.78	18.31	7.03						
		Interoffice Channel - Dedicated Transport - 56 kbps - per mile per month			U1TDX	1L5XX	0.0091										
		Interoffice Channel - Dedicated Transport - 56 kbps - Facility Termination			U1TDX	U1TD5	18.44	47.35	31.78	18.31	7.03						
		Interoffice Channel - Dedicated Transport - 64 kbps - per mile per month			U1TDX	1L5XX	0.0091										
		Interoffice Channel - Dedicated Transport - 64 kbps - Facility Termination			U1TDX	U1TD6	18.44	47.35	31.78	18.31	7.03						
		Interoffice Channel - Dedicated Channel - DS1 - Per Mile per month			U1TD1	1L5XX	0.1856										
		Interoffice Channel - Dedicated Tranport - DS1 - Facility Termination			U1TD1	U1TF1	88.44	105.54	98.47	21.47	19.05						
		Interoffice Channel - Dedicated Transport - DS3 - Per Mile per month			U1TD3	1L5XX	3.87										
		Interoffice Channel - Dedicated Transport - DS3 - Facility Termination per month			U1TD3	U1TF3	1,071.00	335.46	219.28	72.03	70.56						
		Interoffice Channel - Dedicated Transport - STS-1 - Per Mile per month			U1TS1	1L5XX	3.87										
		Interoffice Channel - Dedicated Transport - STS-1 - Facility Termination			U1TS1	U1TFS	1,056.00	335.46	219.28	72.03	70.56						
DARK FIBER																	
		Dark Fiber, Four Fiber Strands, Per Route Mile or Fraction Thereof per month - Interoffice Channel			UDF, UDFCX	1L5DF	26.85										
		NRC Dark Fiber - Interoffice Channel			UDF, UDFCX	UDF14		751.34	193.88	356.21	230.11						
		Dark Fiber, Four Fiber Strands, Per Route Mile or Fraction Thereof per month - Local Loop			UDF, UDFCX	1L5DL	55.04										
		NRC Dark Fiber - Local Loop			UDF, UDFCX	UDFL4		751.34	193.88	356.21	230.11						

UNBUNDLED NETWORK ELEMENTS - Florida														Attachment: 2		Exhibit: A	
CATEGORY		RATE ELEMENTS	Interim	Zone	BCS	USOC	RATES ($)					Svc Order Submitted Elec per LSR	Svc Order Submitted Manually per LSR	Incremental Charge - Manual Svc Order vs. Electronic-1st	Incremental Charge - Manual Svc Order vs. Electronic-Add'l	Incremental Charge - Manual Svc Order vs. Electronic-Disc 1st	Incremental Charge - Manual Svc Order vs. Electronic-Disc Add'l
							Rec	Nonrecurring		Nonrecurring Disconnect		OSS Rates ($)					
								First	Add'l	First	Add'l	SOMEC	SOMAN	SOMAN	SOMAN	SOMAN	SOMAN
8XX ACCESS TEN DIGIT SCREENING																	
		8XX Access Ten Digit Screening, Per Call			OHD		0.0006252										
		8XX Access Ten Digit Screening, Reservation Charge Per 8XX Number Reserved			OHD	N8R1X		4.15	0.70								
		8XX Access Ten Digit Screening, Per 8XX No. Established W/O POTS Translations			OHD			8.78	1.18	5.77	0.70						
		8XX Access Ten Digit Screening, Per 8XX No. Established With POTS Translations			OHD	N8FTX		8.78	1.18	5.77	0.70						
		8XX Access Ten Digit Screening, Customized Area of Service Per 8XX Number			OHD	N8FCX		4.15	2.07								
		8XX Access Ten Digit Screening, Multiple InterLATA CXR Routing Per CXR Requested Per 8XX No.			OHD	N8FMX		4.85	2.78								
		8XX Access Ten Digit Screening, Change Charge Per Request			OHD	N8FAX		4.85	0.70								
		8XX Access Ten Digit Screening, Call Handling and Destination Features			OHD	N8FDX		4.15	4.15								
		8XX Access Ten Digit Screening, w/ 8FL No. Delivery, per query			OHD		0.0006252										
		8XX Access Ten Digit Screening, w/ POTS No. Delivery, per query			OHD		0.0006252										
LINE INFORMATION DATA BASE ACCESS (LIDB)																	
		LIDB Common Transport Per Query			OQT		0.0000203										
		LIDB Validation Per Query			OQU		0.0136959										
		LIDB Originating Point Code Establishment or Change			OQT, OQU	NRBPX		55.13	55.13	55.13	55.13						
SIGNALING (CCS7)																	
		CCS7 Signaling Termination, Per STP Port			UDB	PT8SX	135.05										
		CCS7 Signaling Usage, Per TCAP Message			UDB		0.0000607										
		CCS7 Signaling Connection, Per link (A link)			UDB	TPP++	17.93	43.57	43.57	18.31	18.31						
		CCS7 Signaling Connection, Per link (B link) (also known as D link)			UDB	TPP++	17.93	43.57	43.57	18.31	18.31						
		CCS7 Signaling Usage, Per ISUP Message			UDB		0.0000152										
		CCS7 Signaling Usage Surrogate, per link per LATA			UDB	STU56	694.32										
		CCS7 Signaling Point Code, per Originating Point Code Establishment or Change, per STP affected			UDB	CCAPO		46.03	46.03	46.03	46.03						
E911 SERVICE																	
		Local Channel - Dedicated - 2-wr Voice Grade - Zone 1					21.94	265.84	46.97	37.63	4.00						
		Local Channel - Dedicated - 2-wr Voice Grade - Zone 2					29.62	265.84	46.97	37.63	4.00						
		Local Channel - Dedicated - 2-wr Voice Grade - Zone 3					57.22	265.84	46.97	37.63	4.00						
		Interoffice Transport - Dedicated - 2-wr Voice Grade Per Mile					0.0091										
		Interoffice Transport - Dedicated - 2-wr Voice Grade Per Facility Termination					25.32	47.35	31.78	18.31	7.03						
		Local Channel - Dedicated - DS1 - Zone 1					35.28	216.65	183.54	21.47	19.05						
		Local Channel - Dedicated - DS1 - Zone 2					47.63	216.65	183.54	21.47	19.05						
		Local Channel - Dedicated - DS1 - Zone 3					92.01	216.65	183.54	21.47	19.05						
		Interoffice Transport - Dedicated - DS1 Per Mile					0.1856										
		Interoffice Transport - Dedicated - DS1 Per Facility Termination					88.44	105.54	98.47	21.47	19.05						
CALLING NAME (CNAM) SERVICE																	
		CNAM For DB Owners - Service Establishment			OQV			25.35	25.35	19.01	19.01						
		CNAM For Non DB Owners - Service Establishment			OQV			25.35	25.35	19.01	19.01						
		CNAM For DB Owners - Service Provisioning With Point Code Establishment			OQV			1,592.00	1,177.00	352.36	259.09						
		CNAM For Non DB Owners - Service Provisioning With Point Code Establishment			OQV			546.51	393.82	358.06	259.09						
		CNAM for DB Owners, Per Query			OQV		0.001024										
		CNAM for Non DB Owners, Per Query			OQV		0.001024										
SELECTIVE ROUTING																	
		Selective Routing Per Unique Line Class Code Per Request Per Switch						93.55	93.55	12.71	12.71						
VIRTUAL COLLOCATION																	

UNBUNDLED NETWORK ELEMENTS - Florida														Attachment: 2		Exhibit: A	
CATEGORY		RATE ELEMENTS	Interim	Zone	BCS	USOC	RATES ($)					Svc Order Submitted Elec per LSR	Svc Order Submitted Manually per LSR	Incremental Charge - Manual Svc Order vs. Electronic-1st	Incremental Charge - Manual Svc Order vs. Electronic-Add'l	Incremental Charge - Manual Svc Order vs. Electronic-Disc 1st	Incremental Charge - Manual Svc Order vs. Electronic-Disc Add'l
							Rec	Nonrecurring		Nonrecurring Disconnect		OSS Rates ($)					
								First	Add'l	First	Add'l	SOMEC	SOMAN	SOMAN	SOMAN	SOMAN	SOMAN
		Virtual Collocation-2 Wire Cross Connects (Loop) for Line Splitting			UEPSR UEPSB	VE1LS	0.0502	11.57	11.57	0.00	0.00						
PHYSICAL COLLOCATION																	
		Physical Collocation-2 Wire Cross Connects (Loop) for Line Splitting			UEPSR UEPSB	PE1LS	0.0276	8.22	7.22	5.74	4.58						
AIN SELECTIVE CARRIER ROUTING																	
		Regional Service Establishment			SRC	SRCEC		193,444.00		7,737.00							
		End Office Establishment			SRC	SRCEO		187.36	187.36	0.69	0.69						
		Query NRC, per query			SRC		0.0031868										
AIN - BELLSOUTH AIN SMS ACCESS SERVICE																	
		AIN SMS Access Service - Service Establishment, Per State, Initial Setup			A1N	CAMSE		43.56	43.56	44.93	44.93						
		AIN SMS Access Service - Port Connection - Dial/Shared Access			A1N	CAMDP		8.64	8.64	10.03	10.03						
		AIN SMS Access Service - Port Connection - ISDN Access			A1N	CAM1P		8.64	8.64	10.03	10.03						
		AIN SMS Access Service - User Identification Codes - Per User ID Code			A1N	CAMAU		38.66	38.66	29.88	29.88						
		AIN SMS Access Service - Security Card, Per User ID Code, Initial or Replacement			A1N	CAMRC		75.10	75.10	12.93	12.93						
		AIN SMS Access Service - Storage, Per Unit (100 Kilobytes)					0.0028										
		AIN SMS Access Service - Session, Per Minute					0.7809										
		AIN SMS Access Service - Company Performed Session, Per Minute					0.4609										
AIN - BELLSOUTH AIN TOOLKIT SERVICE																	
		AIN Toolkit Service - Service Establishment Charge, Per State, Initial Setup			CAM	BAPSC		43.56	43.56	44.93	44.93						
		AIN Toolkit Service - Training Session, Per Customer				BAPVX		8,439.00	8,439.00								
		AIN Toolkit Service - Trigger Access Charge, Per Trigger, Per DN, Term. Attempt				BAPTT		8.64	8.64	10.03	10.03						
		AIN Toolkit Service - Trigger Access Charge, Per Trigger, Per DN, Off-Hook Delay				BAPTD		8.64	8.64	10.03	10.03						
		AIN Toolkit Service - Trigger Access Charge, Per Trigger, Per DN, Off-Hook Immediate				BAPTM		8.64	8.64	10.03	10.03						
		AIN Toolkit Service - Trigger Access Charge, Per Trigger, Per DN, 10-Digit PODP				BAPTO		38.06	38.06	15.86	15.86						
		AIN Toolkit Service - Trigger Access Charge, Per Trigger, Per DN, CDP				BAPTC		38.06	38.06	15.86	15.86						
		AIN Toolkit Service - Trigger Access Charge, Per Trigger, Per DN, Feature Code				BAPTF		38.06	38.06	15.86	15.86						
		AIN Toolkit Service - Query Charge, Per Query					0.0535927										
		AIN Toolkit Service - Type 1 Node Charge, Per AIN Toolkit Subscription, Per Node, Per Query					0.0063698										
		AIN Toolkit Service - SCP Storage Charge, Per SMS Access Account, Per 100 Kilobytes					0.06										
		AIN Toolkit Service - Monthly report - Per AIN Toolkit Service Subscription			CAM	BAPMS	8.34	8.64	8.64	6.08	6.08						
		AIN Toolkit Service - Special Study - Per AIN Toolkit Service Subscription			CAM	BAPLS	3.73	9.56	9.56								
		AIN Toolkit Service - Call Event Report - Per AIN Toolkit Service Subscription			CAM	BAPDS	4.73	8.64	8.64	6.08	6.08						
		AIN Toolkit Service - Call Event Special Study - Per AIN Toolkit Service Subscription			CAM	BAPES	0.12	9.56	9.56								
ENHANCED EXTENDED LINK (EELs)																	
	NOTE: The monthly recurring and non-recurring charges below will apply and the Switch-As-Is Charge will not apply for UNE combinations provisioned as ' Ordinarily Combined' Network Elements.																
	NOTE: The monthly recurring and the Switch-As-Is Charge and not the non-recurring charges below will apply for UNE combinations provisioned as ' Currently Combined' Network Elements.																
	EXTENTED 2-WIRE VOICE GRADE EXTENDED LOOP WITH DEDICATED DS1 INTEROFFICE TRANSPORT																
		First 2-Wire VG Loop (SL2) in Combination - Zone 1		1	UNCVX	UEAL2	12.24	127.59	60.54	42.79	2.81						
		First 2-Wire VG Loop (SL2) in Combination - Zone 2		2	UNCVX	UEAL2	17.40	127.59	60.54	42.79	2.81						
		First 2-Wire VG Loop (SL2) in Combination - Zone 3		3	UNCVX	UEAL2	30.87	127.59	60.54	42.79	2.81						

UNBUNDLED NETWORK ELEMENTS - Florida														Attachment: 2		Exhibit: A	
CATEGORY		RATE ELEMENTS	Interim	Zone	BCS	USOC	RATES ($)					Svc Order Submitted Elec per LSR	Svc Order Submitted Manually per LSR	Incremental Charge - Manual Svc Order vs. Electronic-1st	Incremental Charge - Manual Svc Order vs. Electronic-Add'l	Incremental Charge - Manual Svc Order vs. Electronic-Disc 1st	Incremental Charge - Manual Svc Order vs. Electronic-Disc Add'l
							Rec	Nonrecurring		Nonrecurring Disconnect		OSS Rates ($)					
								First	Add'l	First	Add'l	SOMEC	SOMAN	SOMAN	SOMAN	SOMAN	SOMAN
		Interoffice Transport - Dedicated - DS1 combination - Per Mile per month			UNC1X	1L5XX	0.1856										
		Interoffice Transport - Dedicated - DS1 combination - Facility Termination per month			UNC1X	U1TF1	88.44	174.46	122.46	45.61	17.95						
		1/0 Channelization System in combination Per Month			UNC1X	MQ1	146.77	101.42	71.62								
		Voice Grade COCI - Per Month			UNCVX	1D1VG	1.38	10.07	7.08	0.00	0.00						
		Each Additional 2-Wire VG Loop (SL 2) in Combination - Zone 1		1	UNCVX	UEAL2	12.24	127.59	60.54	42.79	2.81						
		Each Additional 2-Wire VG Loop (SL 2) in Combination - Zone 2		2	UNCVX	UEAL2	17.40	127.59	60.54	42.79	2.81						
		Each Additional 2-Wire VG Loop (SL 2) in Combination - Zone 3		3	UNCVX	UEAL2	30.87	127.59	60.54	42.79	2.81						
		Voice Grade COCI - Per Month			UNCVX	1D1VG	1.38	10.07	7.08	0.00	0.00						
		Nonrecurring Currently Combined Network Elements Switch -As-Is Charge			UNC1X	UNCCC		8.98	8.98	8.98	8.98						
	EXTENDED 4-WIRE VOICE GRADE EXTENDED LOOP WITH DEDICATED DS1 INTEROFFICE TRANSPORT																
		First 4-Wire Analog Voice Grade Loop in Combination - Zone 1		1	UNCVX	UEAL4	18.89	127.59	60.54	42.79	2.81						
		First 4-Wire Analog Voice Grade Loop in Combination - Zone 2		2	UNCVX	UEAL4	26.84	127.59	60.54	42.79	2.81						
		First 4-Wire Analog Voice Grade Loop in Combination - Zone 3		3	UNCVX	UEAL4	47.62	127.59	60.54	42.79	2.81						
		Interoffice Transport - Dedicated - DS1 combination - Per Mile Per Month			UNC1X	1L5XX	0.1856										
		Interoffice Transport - Dedicated - DS1 - Facility Termination Per Month			UNC1X	U1TF1	88.44	174.46	122.46	45.61	17.95						
		1/0 Channel System in combination Per Month			UNC1X	MQ1	146.77	101.42	71.62								
		Voice Grade COCI in combination - per month			UNCVX	1D1VG	1.38	10.07	7.08	0.00	0.00						
		Additional 4-Wire Analog Voice Grade Loop in same DS1 Interoffice Transport Combination - Zone 1		1	UNCVX	UEAL4	18.89	127.59	60.54	42.79	2.81						
		Additional 4-Wire Analog Voice Grade Loop in same DS1 Interoffice Transport Combination - Zone 2		2	UNCVX	UEAL4	26.84	127.59	60.54	42.79	2.81						
		Additional 4-Wire Analog Voice Grade Loop in same DS1 Interoffice Transport Combination - Zone 3		3	UNCVX	UEAL4	47.62	127.59	60.54	42.79	2.81						
		Additional Voice Grade COCI in combination - per month			UNCVX	1D1VG	1.38	10.07	7.08	0.00	0.00						
		Nonrecurring Currently Combined Network Elements Switch -As-Is Charge			UNC1X	UNCCC		8.98	8.98	8.98	8.98						
	EXTENDED 4-WIRE 56 KBPS EXTENDED DIGITAL LOOP WITH DEDICATED DS1 INTEROFFICE TRANSPORT																
		First 4-Wire 56Kbps Digital Grade Loop in Combination - Zone 1		1	UNCDX	UDL56	22.20	127.59	60.54	42.79	2.81						
		First 4-Wire 56Kbps Digital Grade Loop in Combination - Zone 2		2	UNCDX	UDL56	31.56	127.59	60.54	42.79	2.81						
		First 4-Wire 56Kbps Digital Grade Loop in Combination - Zone 3		3	UNCDX	UDL56	55.99	127.59	60.54	42.79	2.81						
		Interoffice Transport - Dedicated - DS1 combination - Per Mile Per Month			UNC1X	1L5XX	0.1856										
		Interoffice Transport - Dedicated - DS1 - combination Facility Termination Per Month			UNC1X	U1TF1	88.44	174.46	122.46	45.61	17.95						
		1/0 Channel System in combination Per Month			UNC1X	MQ1	146.77	101.42	71.62								
		OCU-DP COCI (data) per month (2.4-64kbs)			UNCDX	1D1DD	2.10	10.07	7.08	0.00	0.00						
		Additional 4-Wire 56Kbps Digital Grade Loop in same DS1 Interoffice Transport Combination - Zone 1		1	UNCDX	UDL56	22.20	127.59	60.54	42.79	2.81						
		Additional 4-Wire 56Kbps Digital Grade Loop in same DS1 Interoffice Transport Combination - Zone 2		2	UNCDX	UDL56	31.56	127.59	60.54	42.79	2.81						
		Additional 4-Wire 56Kbps Digital Grade Loop in same DS1 Interoffice Transport Combination - Zone 3		3	UNCDX	UDL56	55.99	127.59	60.54	42.79	2.81						
		Additional OCU-DP COCI (data) - in combination per month (2.4-64kbs)			UNCDX	1D1DD	2.10	10.07	7.08	0.00	0.00						

UNBUNDLED NETWORK ELEMENTS - Florida														Attachment: 2		Exhibit: A	
CATEGORY		RATE ELEMENTS	Interim	Zone	BCS	USOC	RATES ($)					Svc Order Submitted Elec per LSR	Svc Order Submitted Manually per LSR	Incremental Charge - Manual Svc Order vs. Electronic-1st	Incremental Charge - Manual Svc Order vs. Electronic-Add'l	Incremental Charge - Manual Svc Order vs. Electronic-Disc 1st	Incremental Charge - Manual Svc Order vs. Electronic-Disc Add'l
							Rec	Nonrecurring		Nonrecurring Disconnect		OSS Rates ($)					
								First	Add'l	First	Add'l	SOMEC	SOMAN	SOMAN	SOMAN	SOMAN	SOMAN
		Nonrecurring Currently Combined Network Elements Switch -As-Is Charge			UNC1X	UNCCC		8.98	8.98	8.98	8.98						
	EXTENDED 4-WIRE 64 KBPS EXTENDED DIGITAL LOOP WITH DEDICATED DS1 INTEROFFICE TRANSPORT																
		First 4-Wire 64Kbps Digital Grade Loop in Combination - Zone 1		1	UNCDX	UDL64	22.20	127.59	60.54	42.79	2.81						
		First 4-Wire 64Kbps Digital Grade Loop in Combination - Zone 2		2	UNCDX	UDL64	31.56	127.59	60.54	42.79	2.81						
		First 4-Wire 64Kbps Digital Grade Loop in Combination - Zone 3		3	UNCDX	UDL64	55.99	127.59	60.54	42.79	2.81						
		Interoffice Transport - Dedicated - DS1 combination - Per Mile Per Month			UNC1X	1L5XX	0.1856										
		interoffice Transport - Dedicated - DS1 combination - Facility Termination Per Month			UNC1X	U1TF1	88.44	174.46	122.46	45.61	17.95						
		1/0 Channel System in combination Per Month			UNC1X	MQ1	146.77	101.42	71.62								
		OCU-DP COCI (data) - in combination - per month (2.4-64kbs)			UNCDX	1D1DD	2.10	10.07	7.08	0.00	0.00						
		Additional 4-Wire 64Kbps Digital Grade Loop in same DS1 Interoffice Transport Combination - Zone 1		1	UNCDX	UDL64	22.20	127.59	60.54	42.79	2.81						
		Additional 4-Wire 64Kbps Digital Grade Loop in same DS1 Interoffice Transport Combination - Zone 2		2	UNCDX	UDL64	31.56	127.59	60.54	42.79	2.81						
		Additional 4-Wire 64Kbps Digital Grade Loop in same DS1 Interoffice Transport Combination - Zone 3		3	UNCDX	UDL64	55.99	127.59	60.54	42.79	2.81						
		Additional OCU-DP COCI (data) - in combination - per month (2.4-64kbs)			UNCDX	1D1DD	2.10	10.07	7.08	0.00	0.00						
		Nonrecurring Currently Combined Network Elements Switch -As-Is Charge			UNC1X	UNCCC		8.98	8.98	8.98	8.98						
	EXTENDED 4-WIRE DS1 DIGITAL EXTENDED LOOP WITH DEDICATED DS1 INTEROFFICE TRANSPORT																
		4-Wire DS1 Digital Loop in Combination - Zone 1		1	UNC1X	USLXX	70.74	217.75	121.62	51.44	14.45						
		4-Wire DS1 Digital Loop in Combination - Zone 2		2	UNC1X	USLXX	100.54	217.75	121.62	51.44	14.45						
		4-Wire DS1 Digital Loop in Combination - Zone 3		3	UNC1X	USLXX	178.39	217.75	121.62	51.44	14.45						
		Interoffice Transport - Dedicated - DS1 combination - Per Mile Per Month			UNC1X	1L5XX	0.1856										
		Interoffice Transport - Dedicated - DS1 combination - Facility Termination Per Month			UNC1X	U1TF1	88.44	174.46	122.46	45.61	17.95						
		Nonrecurring Currently Combined Network Elements Switch -As-Is Charge			UNC1X	UNCCC		8.98	8.98	8.98	8.98						
	EXTENDED 4-WIRE DS1 DIGITAL EXTENDED LOOP WITH DEDICATED DS3 INTEROFFICE TRANSPORT																
		First DS1Loop in Combination - Zone 1		1	UNC1X	USLXX	70.74	217.75	121.62	51.44	14.45						
		First DS1Loop in Combination - Zone 2		2	UNC1X	USLXX	100.54	217.75	121.62	51.44	14.45						
		First DS1Loop in Combination - Zone 3		3	UNC1X	USLXX	178.39	217.75	121.62	51.44	14.45						
		Interoffice Transport - Dedicated - DS3 combination - Per Mile Per Month			UNC3X	1L5XX	3.87										
		Interoffice Transport - Dedicated - DS3 - Facility Termination per month			UNC3X	U1TF3	1,071.00	314.45	130.88	38.60	18.23						
		3/1Channel System in combination per month			UNC3X	MQ3	211.19	199.28	118.64	40.34	39.07						
		DS1 COCI in combination per month			UNC1X	UC1D1	13.76	10.07	7.08	0.00	0.00						
		Additional DS1Loop in DS3 Interoffice Transport Combination - Zone 1		1	UNC1X	USLXX	70.74	217.75	121.62	51.44	14.45						
		Additional DS1Loop in DS3 Interoffice Transport Combination - Zone 2		2	UNC1X	USLXX	100.54	217.75	121.62	51.44	14.45						
		Additional DS1Loop in DS3 Interoffice Transport Combination - Zone 3		3	UNC1X	USLXX	178.39	217.75	121.62	51.44	14.45						
		Additoinal DS1 COCI in combination per month			UNC1X	UC1D1	13.76	10.07	7.08	0.00	0.00						
		Nonrecurring Currently Combined Network Elements Switch -As-Is Charge			UNC3X	UNCCC		8.98	8.98	8.98	8.98						
	EXTENDED 2-WIRE VOICE GRADE EXTENDED LOOP/ 2 WIRE VOICE GRADE INTEROFFICE TRANSPORT																
		2-WireVG Loop in combination - Zone 1		1	UNCVX	UEAL2	12.24	127.59	60.54	42.79	2.81						
		2-WireVG Loop in combination - Zone 2		2	UNCVX	UEAL2	17.40	127.59	60.54	42.79	2.81						
		2-WireVG Loop in combination - Zone 3		3	UNCVX	UEAL2	30.87	127.59	60.54	42.79	2.81						

UNBUNDLED NETWORK ELEMENTS - Florida														Attachment: 2		Exhibit: A	
CATEGORY		RATE ELEMENTS	Interim	Zone	BCS	USOC	RATES ($)					Svc Order Submitted Elec per LSR	Svc Order Submitted Manually per LSR	Incremental Charge - Manual Svc Order vs. Electronic-1st	Incremental Charge - Manual Svc Order vs. Electronic-Add'l	Incremental Charge - Manual Svc Order vs. Electronic-Disc 1st	Incremental Charge - Manual Svc Order vs. Electronic-Disc Add'l
							Rec	Nonrecurring		Nonrecurring Disconnect		OSS Rates ($)					
								First	Add'l	First	Add'l	SOMEC	SOMAN	SOMAN	SOMAN	SOMAN	SOMAN
		Interoffice Transport - 2-wire VG - Dedicated- Per Mile Per Month			UNCVX	1L5XX	0.0091										
		Interoffice Transport - 2-wire VG - Dedicated - Facility Termination per month			UNCVX	U1TV2	25.32	94.70	52.59	50.49	21.53						
		Nonrecurring Currently Combined Network Elements Switch -As-Is Charge			UNCVX	UNCCC		8.98	8.98	8.98	8.98						
	EXTENDED 4-WIRE VOICE GRADE EXTENDED LOOP/ 4 WIRE VOICE GRADE INTEROFFICE TRANSPORT																
		4-WireVG Loop in combination - Zone 1		1	UNCVX	UEAL4	18.89	127.59	60.54	42.79	2.81						
		4-WireVG Loop in combination - Zone 2		2	UNCVX	UEAL4	26.84	127.59	60.54	42.79	2.81						
		4-WireVG Loop in combination - Zone 3		3	UNCVX	UEAL4	47.62	127.59	60.54	42.79	2.81						
		Interoffice Transport - 4-wire VG - Dedicated - Per Mile Per Month			UNCVX	1L5XX	0.0091										
		Interoffice Transport - 4-wire VG - Dedicated - Facility Termination per month			UNCVX	U1TV4	22.58	94.70	52.59	50.49	21.53						
		Nonrecurring Currently Combined Network Elements Switch -As-Is Charge			UNCVX	UNCCC		8.98	8.98	8.98	8.98						
	EXTENDED DS3 DIGITAL EXTENDED LOOP WITH DEDICATED DS3 INTEROFFICE TRANSPORT																
		DS3 Local Loop in combination - per mile per month			UNC3X	1L5ND	10.92										
		DS3 Local Loop in combination - Facility Termination per month			UNC3X	UE3PX	386.88	249.97	162.05	67.10	26.82						
		Interoffice Transport - Dedicated - DS3 - Per Mile per month			UNC3X	1L5XX	3.87										
		Interoffice Transport - Dedicated - DS3 combination - Facility Termination per month			UNC3X	U1TF3	1,071.00	314.45	130.88	38.60	18.23						
		Nonrecurring Currently Combined Network Elements Switch -As-Is Charge			UNC3X	UNCCC		8.98	8.98	8.98	8.98						
	EXTENDED STS-1 DIGITAL EXTENDED LOOP WITH DEDICATED STS-1 INTEROFFICE TRANSPORT																
		STS-1 Local Lolp in combination - per mile per month			UNCSX	1L5ND	10.92										
		STS-1 Local Loop in combination - Facility Termination per month			UNCSX	UDLS1	426.60	249.97	162.05	67.10	26.82						
		Interoffice Transport - Dedicated - STS-1 combination - per mile per month			UNCSX	1L5XX	3.87										
		Interoffice Transport - Dedicated - STS-1 combination - Facility Termination per month			UNCSX	U1TFS	1,056.00	314.45	130.88	38.60	18.23						
		Nonrecurring Currently Combined Network Elements Switch -As-Is Charge			UNCSX	UNCCC		8.98	8.98	8.98	8.98						
	EXTENDED 2-WIRE ISDN EXTENDED LOOP WITH DS1 INTEROFFICE TRANSPORT																
		First 2-Wire ISDN Loop in Combination - Zone 1		1	UNCNX	U1L2X	19.28	127.59	60.60	42.79	2.81						
		First 2-Wire ISDN Loop in Combination - Zone 2		2	UNCNX	U1L2X	27.40	127.59	60.60	42.79	2.81						
		First 2-Wire ISDN Loop in Combination - Zone 3		3	UNCNX	U1L2X	48.62	127.59	60.60	42.79	2.81						
		Interoffice Transport - Dedicated - DS1 combination - per mile per month			UNC1X	1L5XX	0.1856										
		Interoffice Transport - Dedicated - DS1 combination - Facility Termination per month			UNC1X	U1TF1	88.44	174.46	122.46	45.61	17.95						
		1/0 Channel System in combination - per month			UNC1X	MQ1	146.77	101.42	71.62								
		2-wire ISDN COCI (BRITE) - in combination - per month			UNCNX	UC1CA	3.66	10.07	7.08	0.00	0.00						
		Additional 2-wire ISDN Loop in same DS1Interoffice Transport Combination - Zone 1		1	UNCNX	U1L2X	19.28	127.59	60.60	42.79	2.81						
		Additional 2-wire ISDN Loop in same DS1Interoffice Transport Combination - Zone 2		2	UNCNX	U1L2X	27.40	127.59	60.60	42.79	2.81						
		Additional 2-wire ISDN Loop in same DS1Interoffice Transport Combination - Zone 3		3	UNCNX	U1L2X	48.62	127.59	60.60	42.79	2.81						
		Additional 2-wire ISDN COCI (BRITE) - in combination- per month			UNCNX	UC1CA	3.66	10.07	7.08	0.00	0.00						
		Nonrecurring Currently Combined Network Elements Switch -As-Is Charge			UNC1X	UNCCC		8.98	8.98	8.98	8.98						
	EXTENDED 4-WIRE DS1 DIGITAL EXTENDED LOOP WITH DEDICATED STS-1 INTEROFFICE TRANSPORT																
		First DS1 Loop Combination - Zone 1		1	UNC1X	USLXX	70.74	217.75	121.62	51.44	14.45						
		First DS1 Loop Combination - Zone 2		2	UNC1X	USLXX	100.54	217.75	121.62	51.44	14.45						
		First DS1 Loop Combination - Zone 3		3	UNC1X	USLXX	178.39	217.75	121.62	51.44	14.45						

UNBUNDLED NETWORK ELEMENTS - Florida														Attachment: 2		Exhibit: A	
CATEGORY		RATE ELEMENTS	Interim	Zone	BCS	USOC	RATES ($)					Svc Order Submitted Elec per LSR	Svc Order Submitted Manually per LSR	Incremental Charge - Manual Svc Order vs. Electronic-1st	Incremental Charge - Manual Svc Order vs. Electronic-Add'l	Incremental Charge - Manual Svc Order vs. Electronic-Disc 1st	Incremental Charge - Manual Svc Order vs. Electronic-Disc Add'l
							Rec	Nonrecurring		Nonrecurring Disconnect		OSS Rates ($)					
								First	Add'l	First	Add'l	SOMEC	SOMAN	SOMAN	SOMAN	SOMAN	SOMAN
		Interoffice Transport - Dedicated - STS-1 combination - Per Mile Per Month			UNCSX	1L5XX	3.87										
		Interoffice Transport - Dedicated - STS-1 combination - Facility Termination per month			UNCSX	U1TFS	1,056.00	314.45	130.88	38.60	18.23						
		3/1 Channel System in combination per month			UNCSX	MQ3	211.19	199.28	118.64	40.34	39.07						
		DS1 COCI in combination per month			UNC1X	UC1D1	13.76	10.07	7.08	0.00	0.00						
		Additional DS1Loop in the same STS-1 Interoffice Transport Combination - Zone 1		1	UNC1X	USLXX	70.74	217.75	121.62	51.44	14.45						
		Additional DS1Loop in the same STS-1 Interoffice Transport Combination - Zone 2		2	UNC1X	USLXX	100.54	217.75	121.62	51.44	14.45						
		Additional DS1Loop in the same STS-1 Interoffice Transport Combination - Zone 3		3	UNC1X	USLXX	178.39	217.75	121.62	51.44	14.45						
		DS1 COCI in combination per month			UNC1X	UC1D1	13.76	10.07	7.08	0.00	0.00						
		Nonrecurring Currently Combined Network Elements Switch -As-Is Charge			UNCSX	UNCCC		8.98	8.98	8.98	8.98						
	EXTENDED 4-WIRE 56 KBPS DIGITAL EXTENDED LOOP WITH 56 KBPS INTEROFFICE TRANSPORT																
		4-wire 56 kbps Local Loop in combination - Zone 1		1	UNCDX	UDL56	22.20	127.59	60.54	42.79	2.81						
		4-wire 56 kbps Local Loop in combination - Zone 2		2	UNCDX	UDL56	31.56	127.59	60.54	42.79	2.81						
		4-wire 56 kbps Local Loop in combination - Zone 3		3	UNCDX	UDL56	55.99	127.59	60.54	42.79	2.81						
		Interoffice Transport - Dedicated - 4-wire 56 kbps combination - Per Mile per month			UNCDX	1L5XX	0.0091										
		Interoffice Transport - Dedicated - 4-wire 56 kbps combination - Facility Termination per month			UNCDX	U1TD5	18.44	94.70	52.59	50.49	21.53						
		Nonrecurring Currently Combined Network Elements Switch -As-Is Charge			UNCDX	UNCCC		8.98	8.98	8.98	8.98						
	EXTENDED 4-WIRE 64 KBPS DIGITAL EXTENDED LOOP WITH 64 KBPS INTEROFFICE TRANSPORT																
		4-wire 64 kbps Lcoal Loop in Combination - Zone 1		1	UNCDX	UDL64	22.20	127.59	60.54	42.79	2.81						
		4-wire 64 kbps Lcoal Loop in Combination - Zone 2		2	UNCDX	UDL64	31.56	127.59	60.54	42.79	2.81						
		4-wire 64 kbps Lcoal Loop in Combination - Zone 3		3	UNCDX	UDL64	55.99	127.59	60.54	42.79	2.81						
		Interoffice Transport - Dedicated - 4-wire 64 kbps combination - Per Mile per month			UNCDX	1L5XX	0.0091										
		Interoffice Transport - Dedicated - 4-wire 64 kbps combination - Facility Termination per month			UNCDX	U1TD6	18.44	94.70	52.59	50.49	21.53						
		Nonrecurring Currently Combined Network Elements Switch -As-Is Charge			UNCDX	UNCCC		8.98	8.98	8.98	8.98						
	EXTENDED 2-WIRE VOICE GRADE LOOP WITH DS1 INTEROFFICE TRANSPORT w/ 3/1 MUX																
		First 2-wire VG Loop (SL2) in Combination - Zone 1		1	UNCVX	UEAL2	12.24	127.59	60.54	42.79	2.81						
		First 2-wire VG Loop (SL2) in Combination - Zone 2		2	UNCVX	UEAL2	17.40	127.59	60.54	42.79	2.81						
		First 2-wire VG Loop (SL2) in Combination - Zone 3		3	UNCVX	UEAL2	30.87	127.59	60.54	42.79	2.81						
		First Interoffice Transport - Dedicated - DS1 combination - Per Mile			UNC1X	1L5XX	0.1856										
		First Interoffice Transport - Dedicated - DS1 combination - Facility Termination per month			UNC1X	U1TF1	88.44	174.46	122.46	45.61	17.95						
		Per each DS1 Channelization System Per Month			UNC1X	MQ1	146.77	101.42	71.62								
		Per each Voice Grade COCI - Per Month per month			UNCVX	1D1VG	1.38	10.07	7.08	0.00	0.00						
		3/1 Channel System in combination per month			UNC3X	MQ3	211.19	199.28	118.64	40.34	39.07						
		Per each DS1 COCI in combination per month			UNC1X	UC1D1	13.76	10.07	7.08	0.00	0.00						
		Each Additional 2-Wire VG Loop(SL 2) in the same DS1 Interoffice Transport Combination - Zone 1		1	UNCVX	UEAL2	12.24	127.59	60.54	42.79	2.81						
		Each Additional 2-Wire VG Loop(SL2) in the same DS1 Interoffice Transport Combination - Zone 2		2	UNCVX	UEAL2	17.40	127.59	60.54	42.79	2.81						
		Each Additional 2-Wire VG Loop(SL2) in the same DS1 Interoffice Transport Combination - Zone 3		3	UNCVX	UEAL2	30.87	127.59	60.54	42.79	2.81						
		Each Additional Voice Grade COCI in combination - per month			UNCVX	1D1VG	1.38	10.07	7.08	0.00	0.00						
		Each Additional DS1 Interoffice Channel per mile in same 3/1 Channel System per month			UNC1X	1L5XX	0.1856										
		Each Additional DS1 Interoffice Channel Facility Termination in same 3/1 Channel System per month			UNC1X	U1TF1	88.44	174.46	122.46	45.61	17.95						
		Each Additional DS1 COCI combination per month			UNC1X	UC1D1	13.76	10.07	7.08	0.00	0.00						

UNBUNDLED NETWORK ELEMENTS - Florida														Attachment: 2		Exhibit: A	
CATEGORY		RATE ELEMENTS	Interim	Zone	BCS	USOC	RATES ($)					Svc Order Submitted Elec per LSR	Svc Order Submitted Manually per LSR	Incremental Charge - Manual Svc Order vs. Electronic-1st	Incremental Charge - Manual Svc Order vs. Electronic-Add'l	Incremental Charge - Manual Svc Order vs. Electronic-Disc 1st	Incremental Charge - Manual Svc Order vs. Electronic-Disc Add'l
							Rec	Nonrecurring		Nonrecurring Disconnect		OSS Rates ($)					
								First	Add'l	First	Add'l	SOMEC	SOMAN	SOMAN	SOMAN	SOMAN	SOMAN
		Nonrecurring Currently Combined Network Elements Switch -As-Is Charge			UNC1X	UNCCC		8.98	8.98	8.98	8.98						
	EXTENDED 4-WIRE VOICE GRADE LOOP WITH DEDICATED DS1 INTEROFFICE TRANSPORT w/ 3/1 MUX																
		First 4-Wire Analog Voice Grade Local Loop in Combination - Zone 1		1	UNCVX	UEAL4	18.89	127.59	60.54	42.79	2.81						
		First 4-Wire Analog Voice Grade Local Loop in Combination - Zone 2		2	UNCVX	UEAL4	26.84	127.59	60.54	42.79	2.81						
		First 4-Wire Analog Voice Grade Local Loop in Combination - Zone 3		3	UNCVX	UEAL4	47.62	127.59	60.54	42.79	2.81						
		First Interoffice Transport - Dedicated - DS1 combination - Per Mile Per Month			UNC1X	1L5XX	0.1856										
		First Interoffice Transport - Dedicated - DS1 - Facility Termination Per Month			UNC1X	U1TF1	88.44	174.46	122.46	45.61	17.95						
		Per each 1/0 Channel System in combination Per Month			UNC1X	MQ1	146.77	101.42	71.62								
		Per each Voice Grade COCI in combination - per month			UNCVX	1D1VG	1.38	10.07	7.08	0.00	0.00						
		3/1 Channel System in combination per month			UNC3X	MQ3	211.19	199.28	118.64	40.34	39.07						
		Per each DS1 COCI in combination per month			UNC1X	UC1D1	13.76	10.07	7.08	0.00	0.00						
		Additional 4-Wire Analog Voice Grade Loop in same DS1 Interoffice Transport Combination - Zone 1		1	UNCVX	UEAL4	18.89	127.59	60.54	42.79	2.81						
		Additional 4-Wire Analog Voice Grade Loop in same DS1 Interoffice Transport Combination - Zone 2		2	UNCVX	UEAL4	26.84	127.59	60.54	42.79	2.81						
		Additional 4-Wire Analog Voice Grade Loop in same DS1 Interoffice Transport Combination - Zone 3		3	UNCVX	UEAL4	47.62	127.59	60.54	42.79	2.81						
		Each Additional DS1 Interoffice Channel per mile in same 3/1 Channel System per month			UNC1X	1L5XX	0.1856										
		Each Additional DS1 Interoffice Channel Facility Termination in same 3/1 Channel System per month			UNC1X	U1TF1	88.44	174.46	122.46	45.61	17.95						
		Additional Voice Grade COCI - in combination - per month			UNCVX	1D1VG	1.38	10.07	7.08	0.00	0.00						
		Nonrecurring Currently Combined Network Elements Switch -As-Is Charge			UNC1X	UNCCC		8.98	8.98	8.98	8.98						
	EXTENDED 4-WIRE 56 KBPS DIGITAL LOOP WITH DEDICATED DS1 INTEROFFICE TRANSPORT w/ 3/1 MUX																
		First 4-Wire 56Kbps Digital Grade Local Loop in Combination - Zone 1		1	UNCDX	UDL56	22.20	127.59	60.54	42.79	2.81						
		First 4-Wire 56Kbps Digital Grade Local Loop in Combination - Zone 2		2	UNCDX	UDL56	31.56	127.59	60.54	42.79	2.81						
		First 4-Wire 56Kbps Digital Grade Local Loop in Combination - Zone 3		3	UNCDX	UDL56	55.99	127.59	60.54	42.79	2.81						
		First Interoffice Transport - Dedicated - DS1 combination - Per Mile Per Month			UNC1X	1L5XX	0.1856										
		First Interoffice Transport - Dedicated - DS1 - combination Facility Termination Per Month			UNC1X	U1TF1	88.44	174.46	122.46	45.61	17.95						
		Per each 1/0 Channel System in combination Per Month			UNC1X	MQ1	146.77	101.42	71.62								
		Per each OCU-DP COCI (data) COCI per month (2.4-64kbs)			UNCDX	1D1DD	2.10	10.07	7.08	0.00	0.00						
		3/1 Channel System in combination per month			UNC3X	MQ3	211.19	199.28	118.64	40.34	39.07						
		Per each DS1 COCI in combination per month			UNC1X	UC1D1	13.76	10.07	7.08	0.00	0.00						
		Additional 4-Wire 56Kbps Digital Grade Loop in same DS1 Interoffice Transport Combination - Zone 1		1	UNCDX	UDL56	22.20	127.59	60.54	42.79	2.81						
		Additional 4-Wire 56Kbps Digital Grade Loop in same DS1 Interoffice Transport Combination - Zone 2		2	UNCDX	UDL56	31.56	127.59	60.54	42.79	2.81						
		Additional 4-Wire 56Kbps Digital Grade Loop in same DS1 Interoffice Transport Combination - Zone 3		3	UNCDX	UDL56	55.99	127.59	60.54	42.79	2.81						
		OCU-DP COCI (data) COCI in combination per month (2.4-64kbs)			UNCDX	1D1DD	2.10	10.07	7.08	0.00	0.00						
		Each Additional DS1 Interoffice Channel per mile in same 3/1 Channel System per month			UNC1X	1L5XX	0.1856										
		Each Additional DS1 Interoffice Channel Facility Termination in same 3/1 Channel System per month			UNC1X	U1TF1	88.44	174.46	122.46	45.61	17.95						
		Each Additional DS1 COCI in the same 3/1 channel system combination per month			UNC1X	UC1D1	13.76	10.07	7.08	0.00	0.00						

UNBUNDLED NETWORK ELEMENTS - Florida														Attachment: 2		Exhibit: A	
CATEGORY		RATE ELEMENTS	Interim	Zone	BCS	USOC	RATES ($)					Svc Order Submitted Elec per LSR	Svc Order Submitted Manually per LSR	Incremental Charge - Manual Svc Order vs. Electronic-1st	Incremental Charge - Manual Svc Order vs. Electronic-Add'l	Incremental Charge - Manual Svc Order vs. Electronic-Disc 1st	Incremental Charge - Manual Svc Order vs. Electronic-Disc Add'l
							Rec	Nonrecurring		Nonrecurring Disconnect		OSS Rates ($)					
								First	Add'l	First	Add'l	SOMEC	SOMAN	SOMAN	SOMAN	SOMAN	SOMAN
		Nonrecurring Currently Combined Network Elements Switch -As-Is Charge			UNC1X	UNCCC		8.98	8.98	8.98	8.98						
	EXTENDED 4-WIRE 64 KBPS DIGITAL LOOP WITH DEDICATED DS1 INTEROFFICE TRANSPORT w/ 3/1 MUX																
		First 4-Wire 64Kbps Digital Grade Loop in a DS1 Interoffice Transport Combination - Zone 1		1	UNCDX	UDL64	22.20	127.59	60.54	42.79	2.81						
		First 4-Wire 64Kbps Digital Grade Loop in a DS1 Interoffice Transport Combination - Zone 2		2	UNCDX	UDL64	31.56	127.59	60.54	42.79	2.81						
		First 4-Wire 64Kbps Digital Grade Loop in a DS1 Interoffice Transport Combination - Zone 3		3	UNCDX	UDL64	55.99	127.59	60.54	42.79	2.81						
		First Interoffice Transport - Dedicated - DS1 combination - Per Mile Per Month			UNC1X	1L5XX	0.1856										
		First Interoffice Transport - Dedicated - DS1 combination - Facility Termination Per Month			UNC1X	U1TF1	88.44	174.46	122.46	45.61	17.95						
		Per each Channel System 1/0 in combination Per Month			UNC1X	MQ1	146.77	101.42	71.62								
		Per each OCU-DP COCI (data) in combination - per month (2.4-64kbs)			UNCDX	1D1DD	2.10	10.07	7.08	0.00	0.00						
		3/1 Channel System in combination per month			UNC3X	MQ3	211.19	199.28	118.64	40.34	39.07						
		Per each DS1 COCI in combination per month			UNC1X	UC1D1	13.76	10.07	7.08	0.00	0.00						
		Additional 4-Wire 64Kbps Digital Grade Loop in same DS1 Interoffice Transport Combination - Zone 1		1	UNCDX	UDL64	22.20	127.59	60.54	42.79	2.81						
		Additional 4-Wire 64Kbps Digital Grade Loop in same DS1 Interoffice Transport Combination - Zone 2		2	UNCDX	UDL64	31.56	127.59	60.54	42.79	2.81						
		Additional 4-Wire 64Kbps Digital Grade Loop in same DS1 Interoffice Transport Combination - Zone 3		3	UNCDX	UDL64	55.99	127.59	60.54	42.79	2.81						
		Additional OCU-DP COCI (data) - DS1 to DS0 Channel System combination - per month (2.4-64kbs)			UNCDX	1D1DD	2.10	10.07	7.08	0.00	0.00						
		Each Additional DS1 Interoffice Channel per mile in same 3/1 Channel System per month			UNC1X	1L5XX	0.1856										
		Each Additional DS1 Interoffice Channel Facility Termination in same 3/1 Channel System per month			UNC1X	U1TF1	88.44	174.46	122.46	45.61	17.95						
		Each Additional DS1 COCI in the same 3/1 channel system combination per month			UNC1X	UC1D1	13.76	10.07	7.08	0.00	0.00						
		Nonrecurring Currently Combined Network Elements Switch -As-Is Charge			UNC1X	UNCCC		8.98	8.98	8.98	8.98						
	EXTENDED 2-WIRE ISDN LOOP WITH DS1 INTEROFFICE TRANSPORT w/ 3/1 MUX																
		First 2-Wire ISDN Loop in a DS1 Interoffice Combination Transport - Zone 1		1	UNCNX	U1L2X	19.28	127.59	60.60	42.79	2.81						
		First 2-Wire ISDN Loop in a DS1 Interoffice Combination Transport - Zone 2		2	UNCNX	U1L2X	27.40	127.59	60.60	42.79	2.81						
		First 2-Wire ISDN Loop in a DS1 Interoffice Combination Transport - Zone 3		3	UNCNX	U1L2X	48.62	127.59	60.60	42.79	2.81						
		First Interoffice Transport - Dedicated - DS1 combination - Per Mile per month			UNC1X	1L5XX	0.1856										
		First Interoffice Transport - Dedicated - DS1 combination - Facility Termination per month			UNC1X	U1TF1	88.44	174.46	122.46	45.61	17.95						
		Per each Channel System 1/0 in combination - per month			UNC1X	MQ1	146.77	101.42	71.62								
		Per each 2-wire ISDN COCI (BRITE) in combination - per month			UNCNX	UC1CA	3.66	10.07	7.08	0.00	0.00						
		3/1 Channel System in combination per month			UNC3X	MQ3	211.19	199.28	118.64	40.34	39.07						
		Per each DS1 COCI in combination per month			UNC1X	UC1D1	13.76	10.07	7.08	0.00	0.00						
		Additional 2-wire ISDN Loop in same DS1Interoffice Transport Combination - Zone 1		1	UNCNX	U1L2X	19.28	127.59	60.60	42.79	2.81						
		Additional 2-wire ISDN Loop in same DS1Interoffice Transport Combination - Zone 2		2	UNCNX	U1L2X	27.40	127.59	60.60	42.79	2.81						
		Additional 2-wire ISDN Loop in same DS1Interoffice Transport Combination - Zone 3		3	UNCNX	U1L2X	48.62	127.59	60.60	42.79	2.81						
		Additional 2-wire ISDN COCI (BRITE) in same 1/0 channel system combination- per month			UNCNX	UC1CA	3.66	10.07	7.08	0.00	0.00						

UNBUNDLED NETWORK ELEMENTS - Florida														Attachment: 2		Exhibit: A	
CATEGORY		RATE ELEMENTS	Interim	Zone	BCS	USOC	RATES ($)					Svc Order Submitted Elec per LSR	Svc Order Submitted Manually per LSR	Incremental Charge - Manual Svc Order vs. Electronic-1st	Incremental Charge - Manual Svc Order vs. Electronic-Add'l	Incremental Charge - Manual Svc Order vs. Electronic-Disc 1st	Incremental Charge - Manual Svc Order vs. Electronic-Disc Add'l
							Rec	Nonrecurring		Nonrecurring Disconnect		OSS Rates ($)					
								First	Add'l	First	Add'l	SOMEC	SOMAN	SOMAN	SOMAN	SOMAN	SOMAN
		Each Additional DS1 Interoffice Channel per mile in same 3/1 Channel System per month			UNC1X	1L5XX	0.1856										
		Each Additional DS1 Interoffice Channel Facility Termination in same 3/1 Channel System per month			UNC1X	U1TF1	88.44	174.46	122.46	45.61	17.95						
		Each Additional DS1 COCI in the same 3/1 channel system combination per month			UNC1X	UC1D1	13.76	10.07	7.08	0.00	0.00						
		Nonrecurring Currently Combined Network Elements Switch -As-Is Charge			UNC1X	UNCCC		8.98	8.98	8.98	8.98						
	EXTENDED 4-WIRE DS1 LOOP WITH DEDICATED DS1 INTEROFFICE TRANSPORT w/ 3/1 MUX																
		First 4-wire DS1 Digital Lcoal Loop in Combination - Zone 1		1	UNC1X	USLXX	70.74	217.75	121.62	51.44	14.45						
		First 4-wire DS1 Digital Lcoal Loop in Combination - Zone 2		2	UNC1X	USLXX	100.54	217.75	121.62	51.44	14.45						
		First 4-wire DS1 Digital Lcoal Loop in Combination - Zone 3		3	UNC1X	USLXX	178.39	217.75	121.62	51.44	14.45						
		First Interoffice Transport - Dedicated - DS1 combination - Per Mile Per Month			UNC1X	1L5XX	0.1856										
		First Interoffice Transport - Dedicated - DS1 combination - Facility Termination Per Month			UNC1X	U1TF1	88.44	174.46	122.46	45.61	17.95						
		3/1 Channel System in combination per month			UNC3X	MQ3	211.19	199.28	118.64	40.34	39.07						
		Per each DS1 COCI combination per month			UNC1X	UC1D1	13.76	10.07	7.08	0.00	0.00						
		Each Additional DS1 Interoffice Channel per mile in same 3/1 Channel System per month			UNC1X	1L5XX	0.1856										
		Each Additional DS1 Interoffice Channel Facility Termination in same 3/1 Channel System per month			UNC1X	U1TF1	88.44	174.46	122.46	45.61	17.95						
		Each Additional DS1 COCI in the same 3/1 channel system combination per month			UNC1X	UC1D1	13.76	10.07	7.08	0.00	0.00						
		Additional 4-Wire DS1 Digital Local Loop in Combination - Zone 1		1	UNC1X	USLXX	70.74	217.75	121.62	51.44	14.45						
		Additional 4-Wire DS1 Digital Local Loop in Combination - Zone 2		2	UNC1X	USLXX	100.54	217.75	121.62	51.44	14.45						
		Additional 4-Wire DS1 Digital Local Loop in Combination - Zone 3		3	UNC1X	USLXX	178.39	217.75	121.62	51.44	14.45						
		Nonrecurring Currently Combined Network Elements Switch -As-Is Charge			UNC1X	UNCCC		8.98	8.98	8.98	8.98						
	EXTENDED 4-WIRE 56 KBPS DIGITAL EXTENDED LOOP WITH DS0 INTEROFFICE TRANSPORT																
		First 4-wire 56 kbps Local Loop in combination - Zone 1		1	UNCDX	UDL56	22.20	127.59	60.54	42.79	2.81						
		First 4-wire 56 kbps Local Loop in combination - Zone 2		2	UNCDX	UDL56	31.56	127.59	60.54	42.79	2.81						
		First 4-wire 56 kbps Local Loop in combination - Zone 3		3	UNCDX	UDL56	55.99	127.59	60.54	42.79	2.81						
		First 4-wiree 56 kbps Interoffice Transport - Dedicated - Per Mile per month			UNCDX	1L5XX	0.0091										
		First 4-wire 56 kbps Interoffice Transport - Dedicated - Facility Termination per month			UNCDX	U1TD5	18.44	94.70	52.59	50.49	21.53						
		Nonrecurring Currently Combined Network Elements Switch -As-Is Charge			UNCDX	UNCCC		8.98	8.98	8.98	8.98						
	EXTENDED 4-WIRE 64 KBPS DIGITAL EXTENDED LOOP WITH DS0 INTEROFFICE TRANSPORT																
		First 4-wire 64 kbps Local Loop in combination - Zone 1		1	UNCDX	UDL64	22.20	127.59	60.54	42.79	2.81						
		First 4-wire 64 kbps Local Loop in combination - Zone 2		2	UNCDX	UDL64	31.56	127.59	60.54	42.79	2.81						
		First 4-wire 64 kbps Local Loop in combination - Zone 3		3	UNCDX	UDL64	55.99	127.59	60.54	42.79	2.81						
		First I4-wire 65 kbps Interoffice Transport - Dedicated - Per Mile per month			UNCDX	1L5XX	0.0091										
		First 4-wire 64 kbps Interoffice Transport - Dedicated - Facility Termination per month			UNCDX	U1TD6	18.44	94.70	52.59	50.49	21.53						
		Nonrecurring Currently Combined Network Elements Switch -As-Is Charge			UNCDX	UNCCC		8.98	8.98	8.98	8.98						
ADDITIONAL NETWORK ELEMENTS																	
	When used as a part of a currently combined facility, the non-recurrng charges do not apply, but a Switch As Is charge does apply.																
	When used as ordinarily combined network elements in All States, the non-recurring charges apply and the Switch As Is Charge does not.																
	Nonrecurring Currently Combined Network Elements "Switch As Is" Charge (One applies to each combination)																
		Nonrecurring Currently Combined Network Elements Switch -As-Is Charge - 2 wire/4-Wire VG			UNCVX	UNCCC		8.98	8.98	8.98	8.98						

UNBUNDLED NETWORK ELEMENTS - Florida														Attachment: 2		Exhibit: A	
CATEGORY		RATE ELEMENTS	Interim	Zone	BCS	USOC	RATES ($)					Svc Order Submitted Elec per LSR	Svc Order Submitted Manually per LSR	Incremental Charge - Manual Svc Order vs. Electronic-1st	Incremental Charge - Manual Svc Order vs. Electronic-Add'l	Incremental Charge - Manual Svc Order vs. Electronic-Disc 1st	Incremental Charge - Manual Svc Order vs. Electronic-Disc Add'l
							Rec	Nonrecurring		Nonrecurring Disconnect		OSS Rates ($)					
								First	Add'l	First	Add'l	SOMEC	SOMAN	SOMAN	SOMAN	SOMAN	SOMAN
		Nonrecurring Currently Combined Network Elements Switch -As-Is Charge - 56/64 kbps			UNCDX	UNCCC		8.98	8.98	8.98	8.98						
		Nonrecurring Currently Combined Network Elements Switch -As-Is Charge - DS1			UNC1X	UNCCC		8.98	8.98	8.98	8.98						
		Nonrecurring Currently Combined Network Elements Switch -As-Is Charge - DS3			UNC3X	UNCCC		8.98	8.98	8.98	8.98						
		Nonrecurring Currently Combined Network Elements Switch -As-Is Charge - STS1			UNCSX	UNCCC		8.98	8.98	8.98	8.98						
	Optional Features & Functions:																
		Clear Channel Capability Extended Frame Option - per DS1	I		U1TD1, ULDD1,UNC1X	CCOEF		0I	0I	0I	0I						
		Clear Channel Capability Super FrameOption - per DS1	I		U1TD1, ULDD1,UNC1X	CCOSF		0I	0I	0I	0I						
		Clear Channel Capability (SF/ESF) Option - Subsequent Activity - per DS1	I		ULDD1, U1TD1, UNC1X, USL	NRCCC		184.92S	23.82S	2.07S	0.8S						
		C-bit Parity Option - Subsequent Activity - per DS3	i		U1TD3, ULDD3, UE3, UNC3X	NRCC3		219.09S	7.67S	0.773S	0S						
	MULTIPLEXERS																
		DS1 to DS0 Channel System per month			UNC1X	MQ1	146.77	101.42	71.62								
		OCU-DP COCI (data) - DS1 to DS0 Channel System - per month (2.4-64kbs) used for a Local Loop			UDL	1D1DD	2.10	10.07	7.08								
		OCU-DP COCI (data) - DS1 to DS0 Channel System - per month (2.4-64kbs) used for connection to a channelized DS1 Local Channel in the same SWC as collocation			U1TUD	1D1DD	2.10	10.07	7.08	0.00	0.00						
		2-wire ISDN COCI (BRITE) - DS1 to DS0 Channel Systsem - per month for a Local Loop			UDN	UC1CA	3.66	10.07	7.08								
		2-wire ISDN COCI (BRITE) - DS1 to DS0 Channel Systsem - per month used for connection to a channelized DS1 Local Channel in the same SWC as collocation			U1TUB	UC1CA	3.66	10.07	7.08	0.00	0.00						
		Voice Grade COCI - DS1 to DS0 Channel System - per month used for a Local Loop			UEA	1D1VG	1.38	10.07	7.08								
		Voice Grade COCI - DS1 to DS0 Channel System - per month used for connection to a channelized DS1 Local Channel in the same SWC as collocation			U1TUC	1D1VG	1.38	10.07	7.08	0.00	0.00						
		DS3 to DS1 Channel System per month			UNC3X	MQ3	211.19	199.28	118.64	40.34	39.07						
		STS-1 to DS1 Channel System per month			UNXCS	MQ3	211.19	199.28	118.64	40.34	39.07						
		DS1 COCI used with Loop per month			USL	UC1D1	13.76	10.07	7.08								
		DS1 COCI (used for connection to a channelized DS1 Local Channel in the same SWC as collocation) per month			U1TUA	UC1D1	13.76	10.07	7.08	0.00	0.00						
		DS1 COCI used with Interoffice Channel per month			U1TD1	UC1D1	13.76	10.07	7.08	0.00	0.00						
		DS3 Interface Unit (DS1 COCI) used with Local Channel per month			ULDD1	UC1D1	13.76	10.07	7.08	0.00	0.00						
UNBUNDLED LOCAL EXCHANGE SWITCHING(PORTS)																	
	Exchange Ports																
	NOTE: Although the Port Rate includes all available features in GA, KY, LA & TN, the desired features will need to be ordered using retail USOCs																
	2-WIRE VOICE GRADE LINE PORT RATES (RES)																
		Exchange Ports - 2-Wire Analog Line Port- Res.			UEPSR	UEPRL	1.40	3.74	3.63	1.88	1.80						
		Exchange Ports - 2-Wire Analog Line Port with Caller ID - Res.			UEPSR	UEPRC	1.40	3.74	3.63	1.88	1.80						
		Exchange Ports - 2-Wire Analog Line Port outgoing only - Res.			UEPSR	UEPRO	1.40	3.74	3.63	1.88	1.80						
		Exchange Ports - 2-Wire VG unbundled Florida area calling with Caller ID - Res.			UEPSR	UEPAF	1.40	3.74	3.63	1.88	1.80						
		Exchange Ports - 2-Wire VG unbundled Florida Residence Area Calling Plan, without Caller ID capability			UEPSR	UEPA9	1.40	3.74	3.63	1.88	1.80						
		Exchange Ports - 2-Wire VG unbundled Florida extended dialing port for use with CREX7 and Caller ID			UEPSR	UEPA1	1.40	3.74	3.63	1.88	1.80						
		Exchange Ports - 2-Wire VG unbundled Florida extended dialing port for use with CREX7, without Caller ID capability			UEPSR	UEPA8	1.40	3.74	3.63	1.88	1.80						

UNBUNDLED NETWORK ELEMENTS - Florida														Attachment: 2		Exhibit: A	
CATEGORY		RATE ELEMENTS	Interim	Zone	BCS	USOC	RATES ($)					Svc Order Submitted Elec per LSR	Svc Order Submitted Manually per LSR	Incremental Charge - Manual Svc Order vs. Electronic-1st	Incremental Charge - Manual Svc Order vs. Electronic-Add'l	Incremental Charge - Manual Svc Order vs. Electronic-Disc 1st	Incremental Charge - Manual Svc Order vs. Electronic-Disc Add'l
							Rec	Nonrecurring		Nonrecurring Disconnect		OSS Rates ($)					
								First	Add'l	First	Add'l	SOMEC	SOMAN	SOMAN	SOMAN	SOMAN	SOMAN
		Exchange Ports - 2-Wire VG unbundled res, low usage line port with Caller ID (LUM)			UEPSR	UEPAP	1.40	3.74	3.63	1.88	1.80						
		2-Wire voice unbundled Low Usage Line Port without Caller ID Capability			UEPSR	UEPRT	1.40	3.74	3.63	1.88	1.80						
		Subsequent Activity			UEPSR	USASC	0.00	0.00	0.00								
	FEATURES																
		All Available Vertical Features			UEPSR	UEPVF	2.26	0.00	0.00								
	2-WIRE VOICE GRADE LINE PORT RATES (BUS)																
		Exchange Ports - 2-Wire Analog Line Port without Caller ID - Bus			UEPSB	UEPBL	1.40	3.74	3.63	1.88	1.80						
		Exchange Ports - 2-Wire VG unbundled Line Port with unbundled port with Caller+E484 ID - Bus.			UEPSB	UEPBC	1.40	3.74	3.63	1.88	1.80						
		Exchange Ports - 2-Wire Analog Line Port outgoing only - Bus.			UEPSB	UEPBO	1.40	3.74	3.63	1.88	1.80						
		Exhange Ports - 2-Wire VG unbundled incoming only port with Caller ID - Bus			UEPSB	UEPB1	1.40	3.74	3.63	1.88	1.80						
		2-Wire voice unbundled Incoming Only Port without Caller ID Capability			UEPSB	UEPBE	1.40	3.74	3.63	1.88	1.80						
		Subsequent Activity			UEPSB	USASC	0.00	0.00	0.00								
	FEATURES																
		All Available Vertical Features			UEPSB	UEPVF	2.26	0.00	0.00								
	EXCHANGE PORT RATES (DID & PBX)																
		2-Wire VG Unbundled 2-Way PBX Trunk - Res			UEPSE	UEPRD	1.40	39.06	18.18	12.35	0.7187						
		2-Wire VG Line Side Unbundled 2-Way PBX Trunk - Bus			UEPSP	UEPPC	1.40	39.06	18.18	12.35	0.7187						
		2-Wire VG Line Side Unbundled Outward PBX Trunk - Bus			UEPSP	UEPPO	1.40	39.06	18.18	12.35	0.7187						
		2-Wire VG Line Side Unbundled Incoming PBX Trunk - Bus			UEPSP	UEPP1	1.40	39.06	18.18	12.35	0.7187						
		2-Wire Analog Long Distance Terminal PBX Trunk - Bus			UEPSP	UEPLD	1.40	39.06	18.18	12.35	0.7187						
		2-Wire Voice Unbundled PBX LD Terminal Ports			UEPSP	UEPLD	1.40	39.06	18.18	12.35	0.7187						
		2-Wire Vice Unbundled 2-Way PBX Usage Port			UEPSP	UEPXA	1.40	39.06	18.18	12.35	0.7187						
		2-Wire Voice Unbundled PBX Toll Terminal Hotel Ports			UEPSP	UEPXB	1.40	39.06	18.18	12.35	0.7187						
		2-Wire Voice Unbundled PBX LD DDD Terminals Port			UEPSP	UEPXC	1.40	39.06	18.18	12.35	0.7187						
		2-Wire Voice Unbundled PBX LD Terminal Switchboard Port			UEPSP	UEPXD	1.40	39.06	18.18	12.35	0.7187						
		2-Wire Voice Unbundled PBX LD Terminal Switchboard IDD Capable Port			UEPSP	UEPXE	1.40	39.06	18.18	12.35	0.7187						
		2-Wire Voice Unbundled 2-Way PBX Hotel/Hospital Economy Administrative Calling Port			UEPSP	UEPXL	1.40	39.06	18.18	12.35	0.7187						
		2-Wire Voice Unbundled 2-Way PBX Hotel/Hospital Economy Room Calling Port			UEPSP	UEPXM	1.40	39.06	18.18	12.35	0.7187						
		2-Wire Voice Unbundled 1-Way Outgoing PBX Hotel/Hospital Discount Room Calling Port			UEPSP	UEPXO	1.40	39.06	18.18	12.35	0.7187						
		2-Wire Voice Unbundled 1-Way Outgoing PBX Measured Port			UEPSP	UEPXS	1.40	39.06	18.18	12.35	0.7187						
		Subsequent Activity			UEPSP	USASC	0.00	0.00	0.00								
	FEATURES																
		All Available Vertical Features			UEPSP UEPSE	UEPVF	2.26	0.00	0.00								
	EXCHANGE PORT RATES (COIN)																
		Exchange Ports - Coin Port					1.40	3.74	3.63	1.88	1.80						
	NOTE: Transmission/usage charges associated with POTS circuit switched usage will also apply to circuit switched voice and/or circuit switched data transmission by B-Channels associated with 2-wire ISDN ports.																
	NOTE: Access to B Channel or D Channel Packet capabilities will be available only through BFR/New Business Request Process. Rates for the packet capabilities will be determined via the Bona Fide Request/New Business Request Process.																
UNBUNDLED LOCAL EXCHANGE SWITCHING(PORTS)																	
	EXCHANGE PORT RATES																
	The DS1 Port rates below for 4-Wire DDITS Trunk Port and 4-Wire ISDN Port in this rate exhibit apply to the embedded base in place as of 10/2/03 until 4/1/04. After 4/1/04 these rates shall revert to tariff rates or a separate agreement.																
	Requests for 4-Wire DDITS Trunk Ports with 4-Wire ISDN DS1 Ports after the effective date of this amendment shall be provided pursuant to a separate agreement or tariff at BellSouth's discretion.																
		Exchange Ports - 2-Wire DID Port			UEPEX	UEPP2	8.73	78.41	15.82	41.94	4.26						
		Exchange Ports - DDITS Port - 4-Wire DS1 Port with DID capability (E:4/1/2004)			UEPDD	UEPDD	54.95	151.11	77.75	48.81	3.10						
		Exchange Ports - 2-Wire ISDN Port (See Notes below.)			UEPTX, UEPSX	U1PMA	8.83	46.83	50.68	27.64	11.93						
		All Features Offered			UEPTX, UEPSX	UEPVF	2.26	0.00	0.00								
		Exchange Ports - 2-Wire ISDN Port -- Channel Profiles			UEPTX, UEPSX	U1UMA	0.00	0.00	0.00								
	NOTE: Access to B Channel or D Channel Packet capabilities will be available only through BFR/New Business Request Process. Rates for the packet capabilities will be determined via the Bona Fide Request/New Business Request Process.																

UNBUNDLED NETWORK ELEMENTS - Florida														Attachment: 2		Exhibit: A	
CATEGORY	RATE ELEMENTS	Interim	Zone	BCS	USOC	RATES ($)					Svc Order Submitted Elec per LSR	Svc Order Submitted Manually per LSR	Incremental Charge - Manual Svc Order vs. Electronic-1st	Incremental Charge - Manual Svc Order vs. Electronic-Add'l	Incremental Charge - Manual Svc Order vs. Electronic-Disc 1st	Incremental Charge - Manual Svc Order vs. Electronic-Disc Add'l
						Rec	Nonrecurring		Nonrecurring Disconnect		OSS Rates ($)					
							First	Add'l	First	Add'l	SOMEC	SOMAN	SOMAN	SOMAN	SOMAN	SOMAN
NOTE: Access to B Channel or D Channel Packet capabilities will be available only through BFR/New Business Request Process. Rates for the packet capabilities will be determined via the Bona Fide Request/New Business Request Process.																
EXCHANGE PORT RATES (continued)																
	Exchange Ports - 4-Wire ISDN DS1 Port with Detailed E911 Locator Capability (E:4/1/2004)			UEPEX	UEPEX	82.74	174.61	95.17	49.80	18.23						
	Exchange Ports - 4-Wire ISDN DS1 Port (E:4/1/2004)			UEPDX	UEPDX	82.74	174.61	95.17	49.80	18.23						
	Physical Collocation - DS1 Cross-Connects			UEPEX UEPDX	PE1P1	1.32	27.77	15.52	5.93	4.77						
	Virtual collocation - Special Access & UNE, cross-connect per DS1			UEPEX UEPDX	CNC1X	7.50	155.00	14.00								
Detailed E911 with Locator Capability (required with UEPEX port)																
	Unbundled Exchange Ports, 4-Wire ISDN DS1 Port - E911 Locator Capability - Initial Profile Establishment per CLEC per State			UEPEX	UEP1A	0.00	1,809.00		151.12							
	Unbundled Exchange Ports, 4-Wire ISDN DS1 Port - E911 Locator Capability - Subsequent Profile Changes, Additions, Deletions			UEPEX	UEP1B	0.00	175.66									
New or Additional PRI Telephone Numbers																
	Unbundled Exchange Ports, 4-Wire ISDN DS1 Port - E911 Locator Capability 2-way Telephone Numbers, per number in E911 profile [New or Additional]			UEPEX	UEP1C	0.0699	0.5412									
	Unbundled Exchange Ports, 4-Wire ISDN DS1 Port - E911 Locator Capability - Outdial Telephone Numbers, per number in E911 profile [New or Additional]			UEPEX	UEP1D	0.0699	12.71	12.71								
	Unbundled Exchange Ports, 4-Wire ISDN DS1 Port - Inward Telephone Numbers - Inward Data Only Option [New or Additional]			UEPDX	UEP1E	0.00	0.5412									
	Exchange Ports - 4-Wire ISDN DS1 Port - Subsequent [New] Inward Tel Numbers [Customer Testing Purposes]			UEPEX	PR7ZT	0.00	25.42	25.42								
LOCAL NUMBER PORTABILITY																
	Local Number Portability (1 per port)			UEPEX UEPDX	LNPCN	1.75										
INTERFACE (Provsioning Only)																
	Voice/Data			UEPEX	PR71V	0.00	0.00	0.00								
	Digital Data			UEPEX	PR71D	0.00	0.00	0.00								
	Inward Data			UEPDX	PR71E	0.00	0.00	0.00								
New or Additional Channel																
	New or Additional - Voice/Data "B" Channel			UEPEX	PR7BV	0.00	15.48									
	New or Additional - Digital Data "B" Channel			UEPEX	PR7BF	0.00	15.48									
	New or Additional Inward Data "B" Channel			UEPDX	PR7BD	0.00	15.48									
	New or Additional Useage Sensitive Voice Data "B" Channel			UEPEX	PR7BS	0.00										
	New or Additional Useage Sensitive Digital Data "B" Channel			UEPEX	PR7BU	0.00										
	New or Additional PRI "D" Channel			UEPEX	PR7EX	0.00	15.48									
CALL TYPES																
	Inward			UEPEX UEPDX	PR7C1	0.00	0.00	0.00								
	Outward			UEPEX	PR7CO	0.00	0.00	0.00								
	Two-way			UEPEX	PR7CC	0.00	0.00	0.00								
UNBUNDLED PORT with REMOTE CALL FORWARDING CAPABILITY																
UNBUNDLED REMOTE CALL FORWARDING SERVICE - RESIDENCE																
	Unbundled Remote Call Forwarding Service, Area Calling, Res			UEPVR	UERAC	1.40	3.74	3.63	1.88	1.80						
	Unbundled Remote Call Forwarding Service, Local Calling - Res			UEPVR	UERLC	1.40	3.74	3.63	1.88	1.80						
	Unbundled Remote Call Forwarding Service, InterLATA - Res			UEPVR	UERTE	1.40	3.74	3.63	1.88	1.80						
	Unbundled Remote Call Forwarding Service, IntraLATA - Res			UEPVR	UERTR	1.40	3.74	3.63	1.88	1.80						
Non-Recurring																
	Unbundled Remote Call Forwarding Service - Conversion - Switch-as-is			UEPVR	USAC2		0.102	0.102								
	Unbundled Remote Call Forwarding Service - Conversion with allowed change (PIC and LPIC)			UEPVR	USACC		0.102	0.102								
UNBUNDLED REMOTE CALL FORWARDING - Bus																
	Unbundled Remote Call Forwarding Service, Area Calling - Bus			UEPVB	UERAC	1.40	3.74	3.63	1.88	1.80						

UNBUNDLED NETWORK ELEMENTS - Florida														Attachment: 2		Exhibit: A	
CATEGORY	RATE ELEMENTS	Interim	Zone	BCS	USOC	RATES ($)					Svc Order Submitted Elec per LSR	Svc Order Submitted Manually per LSR	Incremental Charge - Manual Svc Order vs. Electronic-1st	Incremental Charge - Manual Svc Order vs. Electronic-Add'l	Incremental Charge - Manual Svc Order vs. Electronic-Disc 1st	Incremental Charge - Manual Svc Order vs. Electronic-Disc Add'l
						Rec	Nonrecurring		Nonrecurring Disconnect		OSS Rates ($)					
							First	Add'l	First	Add'l	SOMEC	SOMAN	SOMAN	SOMAN	SOMAN	SOMAN
	Unbundled Remote Call Forwarding Service, Local Calling - Bus			UEPVB	UERLC	1.40	3.74	3.63	1.88	1.80						
	Unbundled Remote Call Forwarding Service, InterLATA - Bus			UEPVB	UERTE	1.40	3.74	3.63	1.88	1.80						
	Unbundled Remote Call Forwarding Service, IntraLATA - Bus			UEPVB	UERTR	1.40	3.74	3.63	1.88	1.80						
	Unbundled Remote Call Forwarding Service Expanded and Exception Local Calling			UEPVB	UERVJ	1.40	3.74	3.63	1.88	1.80						
Non-Recurring																
	Unbundled Remote Call Forwarding Service - Conversion - Switch-as-is			UEPVB	USAC2		0.102	0.102								
	Unbundled Remote Call Forwarding Service - Conversion with allowed change (PIC and LPIC)			UEPVB	USACC		0.102	0.102								
UNBUNDLED LOCAL SWITCHING, PORT USAGE																
End Office Switching (Port Usage)																
	End Office Switching Function, Per MOU					0.0007662										
	End Office Trunk Port - Shared, Per MOU					0.000164										
Tandem Switching (Port Usage) (Local or Access Tandem)																
	Tandem Switching Function Per MOU					0.0001319										
	Tandem Trunk Port - Shared, Per MOU					0.000235										
	Tandem Switching Function Per MOU (Melded)					0.000027185										
	Tandem Trunk Port - Shared, Per MOU (Melded)					0.000048434										
	Melded Factor: 20.61% of the Tandem Rate															
Common Transport																
	Common Transport - Per Mile, Per MOU					0.0000035										
	Common Transport - Facilities Termination Per MOU					0.0004372										
UNBUNDLED PORT/LOOP COMBINATIONS - COST BASED RATES																
Cost Based Rates are applied where BellSouth is required by FCC and/or State Commission rule to provide Unbundled Local Switching or Switch Ports.																
Features shall apply to the Unbundled Port/Loop Combination - Cost Based Rate section in the same manner as they are applied to the Stand-Alone Unbundled Port section of this Rate Exhibit.																
End Office and Tandem Switching Usage and Common Transport Usage rates in the Port section of this rate exhibit shall apply to all combinations of loop/port network elements except for UNE Coin Port/Loop Combinations.																
The first and additional Port nonrecurring charges apply to Not Currently Combined Combos. For Currently Combined Combos the nonrecurring charges shall be those identified in the Nonrecurring - Currently Combined sections.																
2-WIRE VOICE GRADE LOOP WITH 2-WIRE LINE PORT (RES)																
UNE Port/Loop Combination Rates																
	2-Wire VG Loop/Port Combo - Zone 1		1			10.94										
	2-Wire VG Loop/Port Combo - Zone 2		2			15.05										
	2-Wire VG Loop/Port Combo - Zone 3		3			25.80										
UNE Loop Rates																
	2-Wire Voice Grade Loop (SL1) - Zone 1		1	UEPRX	UEPLX	9.77										
	2-Wire Voice Grade Loop (SL1) - Zone 2		2	UEPRX	UEPLX	13.88										
	2-Wire Voice Grade Loop (SL1) - Zone 3		3	UEPRX	UEPLX	24.63										
2-Wire Voice Grade Line Port Rates (Res)																
	2-Wire voice unbundled port - residence			UEPRX	UEPRL	1.17	53.31	26.46	27.50	8.37						
	2-Wire voice unbundled port with Caller ID - res			UEPRX	UEPRC	1.17	53.31	26.46	27.50	8.37						
	2-Wire voice unbundled port outgoing only - res			UEPRX	UEPRO	1.17	53.31	26.46	27.50	8.37						
	2-Wire voice unbundled Florida Area Calling with Caller ID - res			UEPRX	UEPAF	1.17	53.31	26.46	27.50	8.37						
	2-Wire voice unbundles res, low usage line port with Caller ID (LUM)			UEPRX	UEPAP	1.17	53.31	26.46	27.50	8.37						
	2-Wire voice unbundled Florida extended dialing with Caller ID			UEPRX	UEPA1	1.17	53.31	26.46	27.50	8.37						
	2-Wire voice unbundled Florida extended dialing port without Caller ID capability			UEPRX	UEPA8	1.17	53.31	26.46	27.50	8.37						
	2-Wire voice unbundled Florida Area Calling Port without Caller ID Capability			UEPRX	UEPA9	1.17	53.31	26.46	27.50	8.37						
	2-Wire voice unbundled Low Usage Line Port without Caller ID Capability			UEPRX	UEPRT	1.17	53.31	26.46	27.50	8.37						
FEATURES																
	All Features Offered			UEPRX	UEPVF	2.26	0.00	0.00								
LOCAL NUMBER PORTABILITY																
	Local Number Portability (1 per port)			UEPRX	LNPCX	0.35										
NONRECURRING CHARGES (NRCs) - CURRENTLY COMBINED																

UNBUNDLED NETWORK ELEMENTS - Florida													Attachment: 2		Exhibit: A	
CATEGORY	RATE ELEMENTS	Interim	Zone	BCS	USOC	RATES ($)					Svc Order Submitted Elec per LSR	Svc Order Submitted Manually per LSR	Incremental Charge - Manual Svc Order vs. Electronic-1st	Incremental Charge - Manual Svc Order vs. Electronic-Add'l	Incremental Charge - Manual Svc Order vs. Electronic-Disc 1st	Incremental Charge - Manual Svc Order vs. Electronic-Disc Add'l
						Rec	Nonrecurring		Nonrecurring Disconnect		OSS Rates ($)					
							First	Add'l	First	Add'l	SOMEC	SOMAN	SOMAN	SOMAN	SOMAN	SOMAN
	2-Wire Voice Grade Loop / Line Port Combination - Conversion - Switch-as-is			UEPRX	USAC2		0.102	0.102								
	2-Wire Voice Grade Loop / Line Port Combination - Conversion - Switch with change			UEPRX	USACC		0.102	0.102								
ADDITIONAL NRCs																
	2-Wire Voice Grade Loop/Line Port Combination - Subsequent Activity			UEPRX	USAS2	0.00	0.00	0.00								
	Unbundled Miscellaneous Rate Element, Tag Loop at End User Premise			UEPRX	URETL		8.33	0.83								
OFF/ON PREMISES EXTENSION CHANNELS																
	2 Wire Analog Voice Grade Extension Loop – Non-Design		1	UEPRX	UEAEN	10.69	49.57	22.83	25.62	6.57						
	2 Wire Analog Voice Grade Extension Loop – Non-Design		2	UEPRX	UEAEN	15.20	49.57	22.83	25.62	6.57						
	2 Wire Analog Voice Grade Extension Loop – Non-Design		3	UEPRX	UEAEN	26.97	49.57	22.83	25.62	6.57						
	2 Wire Analog Voice Grade Extension Loop – Design		1	UEPRX	UEAED	12.24	135.75	82.47	63.53	12.01						
	2 Wire Analog Voice Grade Extension Loop – Design		2	UEPRX	UEAED	17.40	135.75	82.47	63.53	12.01						
	2 Wire Analog Voice Grade Extension Loop – Design		3	UEPRX	UEAED	30.87	135.75	82.47	63.53	12.01						
INTEROFFICE TRANSPORT																
	Interoffice Transport - Dedicated - 2 Wire Voice Grade - Facility Termination			UEPRX	U1TV2	25.32	47.35	31.78								
	Interoffice Transport - Dedicated - 2 Wire Voice Grade - Per Mile or Fraction Mile			UEPRX	U1TVM	0.0091	0.00	0.00								
2-WIRE VOICE GRADE LOOP WITH 2-WIRE LINE PORT (BUS)																
UNE Port/Loop Combination Rates																
	2-Wire VG Loop/Port Combo - Zone 1		1			10.94										
	2-Wire VG Loop/Port Combo - Zone 2		2			15.05										
	2-Wire VG Loop/Port Combo - Zone 3		3			25.80										
UNE Loop Rates																
	2-Wire Voice Grade Loop (SL1) - Zone 1		1	UEPBX	UEPLX	9.77										
	2-Wire Voice Grade Loop (SL1) - Zone 2		2	UEPBX	UEPLX	13.88										
	2-Wire Voice Grade Loop (SL1) - Zone 3		3	UEPBX	UEPLX	24.63										
2-Wire Voice Grade Line Port (Bus)																
	2-Wire voice unbundled port without Caller ID - bus			UEPBX	UEPBL	1.17	53.31	26.46	27.50	8.37						
	2-Wire voice unbundled port with Caller + E484 ID - bus			UEPBX	UEPBC	1.17	53.31	26.46	27.50	8.37						
	2-Wire voice unbundled port outgoing only - bus			UEPBX	UEPBO	1.17	53.31	26.46	27.50	8.37						
	2-Wire voice unbundled incoming only port with Caller ID - Bus			UEPBX	UEPB1	1.17	53.31	26.46	27.50	8.37						
	2-Wire voice unbundled Incoming Only Port without Caller ID Capability			UEPBX	UEPBE	1.17	53.31	26.46	27.50	8.37						
LOCAL NUMBER PORTABILITY																
	Local Number Portability (1 per port)			UEPBX	LNPCX	0.35										
FEATURES																
	All Features Offered			UEPBX	UEPVF	2.26	0.00	0.00								
NONRECURRING CHARGES (NRCs) - CURRENTLY COMBINED																
	2-Wire Voice Grade Loop / Line Port Combination - Conversion - Switch-as-is			UEPBX	USAC2		0.102	0.102								
	2-Wire Voice Grade Loop / Line Port Combination - Conversion - Switch with change			UEPBX	USACC		0.102	0.102								
ADDITIONAL NRCs																
	2-Wire Voice Grade Loop/Line Port Combination - Subsequent Activity			UEPBX	USAS2		0.00	0.00								
	Unbundled Miscellaneous Rate Element, Tag Loop at End User Premise			UEPBX	URETL		8.33	0.83								
OFF/ON PREMISES EXTENSION CHANNELS																
	2 Wire Analog Voice Grade Extension Loop – Non-Design		1	UEPBX	UEAEN	10.69	49.57	22.83	25.62	6.57						
	2 Wire Analog Voice Grade Extension Loop – Non-Design		2	UEPBX	UEAEN	15.20	49.57	22.83	25.62	6.57						
	2 Wire Analog Voice Grade Extension Loop – Non-Design		3	UEPBX	UEAEN	26.97	49.57	22.83	25.62	6.57						
	2 Wire Analog Voice Grade Extension Loop – Design		1	UEPBX	UEAED	12.24	135.75	82.47	63.53	12.01						
	2 Wire Analog Voice Grade Extension Loop – Design		2	UEPBX	UEAED	17.40	135.75	82.47	63.53	12.01						
	2 Wire Analog Voice Grade Extension Loop – Design		3	UEPBX	UEAED	30.87	135.75	82.47	63.53	12.01						
INTEROFFICE TRANSPORT																

UNBUNDLED NETWORK ELEMENTS - Florida														Attachment: 2		Exhibit: A	
CATEGORY	RATE ELEMENTS	Interim	Zone	BCS	USOC	RATES ($)					Svc Order Submitted Elec per LSR	Svc Order Submitted Manually per LSR	Incremental Charge - Manual Svc Order vs. Electronic-1st	Incremental Charge - Manual Svc Order vs. Electronic-Add'l	Incremental Charge - Manual Svc Order vs. Electronic-Disc 1st	Incremental Charge - Manual Svc Order vs. Electronic-Disc Add'l
						Rec	Nonrecurring		Nonrecurring Disconnect		OSS Rates ($)					
							First	Add'l	First	Add'l	SOMEC	SOMAN	SOMAN	SOMAN	SOMAN	SOMAN
	Interoffice Transport - Dedicated - 2 Wire Voice Grade - Facility Termination			UEPBX	U1TV2	25.32	47.35	31.78								
	Interoffice Transport - Dedicated - 2 Wire Voice Grade - Per Mile or Fraction Mile			UEPBX	U1TVM	0.0091	0.00	0.00								
2-WIRE VOICE GRADE LOOP WITH 2-WIRE LINE PORT (RES - PBX)																
UNE Port/Loop Combination Rates																
	2-Wire VG Loop/Port Combo - Zone 1		1			10.94										
	2-Wire VG Loop/Port Combo - Zone 2		2			15.05										
	2-Wire VG Loop/Port Combo - Zone 3		3			25.80										
UNE Loop Rates																
	2-Wire Voice Grade Loop (SL 1) - Zone 1		1	UEPRG	UEPLX	9.77										
	2-Wire Voice Grade Loop (SL 1) - Zone 2		2	UEPRG	UEPLX	13.88										
	2-Wire Voice Grade Loop (SL 1) - Zone 3		3	UEPRG	UEPLX	24.63										
2-Wire Voice Grade Line Port Rates (RES - PBX)																
	2-Wire VG Unbundled Combination 2-Way PBX Trunk Port - Res			UEPRG	UEPRD	1.17	174.81	100.65	75.88	12.73						
LOCAL NUMBER PORTABILITY																
	Local Number Portability (1 per port)			UEPRG	LNPCP	3.15	0.00	0.00								
FEATURES																
	All Features Offered			UEPRG	UEPVF	2.26	0.00	0.00								
NONRECURRING CHARGES (NRCs) - CURRENTLY COMBINED																
	2-Wire Voice Grade Loop/ Line Port Combination (PBX) - Conversion - Switch-As-Is			UEPRG	USAC2		8.45	1.91								
	2-Wire Voice Grade Loop/ Line Port Combination (PBX) - Conversion - Switch with Change			UEPRG	USACC		8.45	1.91								
ADDITIONAL NRCs																
	2-Wire Voice Grade Loop/ Line Port Combination (PBX) - Subsequent Activity			UEPRG	USAS2	0.00	0.00	0.00								
	PBX Subsequent Activity - Change/Rearrange Multiline Hunt Group						7.86	7.86								
	Unbundled Miscellaneous Rate Element, Tag Loop at End User Premise			UEPRG	URETL		8.33	0.83								
OFF/ON PREMISES EXTENSION CHANNELS																
	Local Channel Voice grade, per termination		1	UEPRG	P2JHX	12.24	135.75	82.47	63.53	12.01						
	Local Channel Voice grade, per termination		2	UEPRG	P2JHX	17.40	135.75	82.47	63.53	12.01						
	Local Channel Voice grade, per termination		3	UEPRG	P2JHX	30.87	135.75	82.47	63.53	12.01						
	Non-Wire Direct Serve Channel Voice Grade		1	UEPRG	SDD2X	12.92	120.38	43.56	95.00	10.54						
	Non-Wire Direct Serve Channel Voice Grade		2	UEPRG	SDD2X	18.36	120.38	43.56	95.00	10.54						
	Non-Wire Direct Serve Channel Voice Grade		3	UEPRG	SDD2X	32.58	120.38	43.56	95.00	10.54						
INTEROFFICE TRANSPORT																
	Interoffice Transport - Dedicated - 2 Wire Voice Grade - Facility Termination			UEPRG	U1TV2	25.32	47.35	31.78								
	Interoffice Transport - Dedicated - 2 Wire Voice Grade - Per Mile or Fraction Mile			UEPRG	U1TVM	0.0091	0.00	0.00								
2-WIRE VOICE GRADE LOOP WITH 2-WIRE LINE PORT (BUS - PBX)																
UNE Port/Loop Combination Rates																
	2-Wire VG Loop/Port Combo - Zone 1		1			10.94										
	2-Wire VG Loop/Port Combo - Zone 2		2			15.05										
	2-Wire VG Loop/Port Combo - Zone 3		3			25.80										
UNE Loop Rates																
	2-Wire Voice Grade Loop (SL 1) - Zone 1		1	UEPPX	UEPLX	9.77										
	2-Wire Voice Grade Loop (SL 1) - Zone 2		2	UEPPX	UEPLX	13.88										
	2-Wire Voice Grade Loop (SL 1) - Zone 3		3	UEPPX	UEPLX	24.63										
2-Wire Voice Grade Line Port Rates (BUS - PBX)																
	Line Side Unbundled Combination 2-Way PBX Trunk Port - Bus			UEPPX	UEPPC	1.17	174.81	100.65	75.88	12.73						
	Line Side Unbundled Outward PBX Trunk Port - Bus			UEPPX	UEPPO	1.17	174.81	100.65	75.88	12.73						
	Line Side Unbundled Incoming PBX Trunk Port - Bus			UEPPX	UEPP1	1.17	174.81	100.65	75.88	12.73						
	2-Wire Voice Unbundled PBX LD Terminal Ports			UEPPX	UEPLD	1.17	174.81	100.65	75.88	12.73						

UNBUNDLED NETWORK ELEMENTS - Florida														Attachment: 2		Exhibit: A	
CATEGORY	RATE ELEMENTS	Interim	Zone	BCS	USOC	RATES ($)					Svc Order Submitted Elec per LSR	Svc Order Submitted Manually per LSR	Incremental Charge - Manual Svc Order vs. Electronic-1st	Incremental Charge - Manual Svc Order vs. Electronic-Add'l	Incremental Charge - Manual Svc Order vs. Electronic-Disc 1st	Incremental Charge - Manual Svc Order vs. Electronic-Disc Add'l
						Rec	Nonrecurring		Nonrecurring Disconnect		OSS Rates ($)					
							First	Add'l	First	Add'l	SOMEC	SOMAN	SOMAN	SOMAN	SOMAN	SOMAN
	2-Wire Voice Unbundled 2-Way Combination PBX Usage Port			UEPPX	UEPXA	1.17	174.81	100.65	75.88	12.73						
	2-Wire Voice Unbundled PBX Toll Terminal Hotel Ports			UEPPX	UEPXB	1.17	174.81	100.65	75.88	12.73						
	2-Wire Voice Unbundled PBX LD DDD Terminals Port			UEPPX	UEPXC	1.17	174.81	100.65	75.88	12.73						
	2-Wire Voice Unbundled PBX LD Terminal Switchboard Port			UEPPX	UEPXD	1.17	174.81	100.65	75.88	12.73						
	2-Wire Voice Unbundled PBX LD Terminal Switchboard IDD Capable Port			UEPPX	UEPXE	1.17	174.81	100.65	75.88	12.73						
	2-Wire Voice Unbundled 2-Way PBX Hotel/Hospital Economy Administrative Calling Port			UEPPX	UEPXL	1.17	174.81	100.65	75.88	12.73						
	2-Wire Voice Unbundled 2-Way PBX Hotel/Hospital Economy Room Calling Port			UEPPX	UEPXM	1.17	174.81	100.65	75.88	12.73						
	2-Wire Voice Unbundled 1-Way Outgoing PBX Hotel/Hospital Discount Room Calling Port			UEPPX	UEPXO	1.17	174.81	100.65	75.88	12.73						
	2-Wire Voice Unbundled 1-Way Outgoing PBX Measured Port			UEPPX	UEPXS	1.17	174.81	100.65	75.88	12.73						
LOCAL NUMBER PORTABILITY																
	Local Number Portability (1 per port)			UEPPX	LNPCP	3.15	0.00	0.00								
FEATURES																
	All Features Offered			UEPPX	UEPVF	2.26	0.00	0.00								
NONRECURRING CHARGES (NRCs) - CURRENTLY COMBINED																
	2-Wire Voice Grade Loop/ Line Port Combination (PBX) - Conversion - Switch-As-Is			UEPPX	USAC2		8.45	1.91								
	2-Wire Voice Grade Loop/ Line Port Combination (PBX) - Conversion - Switch with Change			UEPPX	USACC		8.45	1.91								
ADDITIONAL NRCs																
	2-Wire Voice Grade Loop/ Line Port Combination (PBX) - Subsequent Activity			UEPPX	USAS2	0.00	0.00	0.00								
	PBX Subsequent Activity - Change/Rearrange Multiline Hunt Group						7.86	7.86								
	Unbundled Miscellaneous Rate Element, Tag Loop at End User Premise			UEPPX	URETL		8.33	0.83								
OFF/ON PREMISES EXTENSION CHANNELS																
	Local Channel Voice grade, per termination		1	UEPPX	P2JHX	12.24	135.75	82.47	63.53	12.01						
	Local Channel Voice grade, per termination		2	UEPPX	P2JHX	17.40	135.75	82.47	63.53	12.01						
	Local Channel Voice grade, per termination		3	UEPPX	P2JHX	30.87	135.75	82.47	63.53	12.01						
	Non-Wire Direct Serve Channel Voice Grade		1	UEPPX	SDD2X	12.92	120.38	43.56	95.00	10.54						
	Non-Wire Direct Serve Channel Voice Grade		2	UEPPX	SDD2X	18.36	120.38	43.56	95.00	10.54						
	Non-Wire Direct Serve Channel Voice Grade		3	UEPPX	SDD2X	32.58	120.38	43.56	95.00	10.54						
INTEROFFICE TRANSPORT																
	Interoffice Transport - Dedicated - 2 Wire Voice Grade - Facility Termination			UEPPX	U1TV2	25.32	47.35	31.78								
	Interoffice Transport - Dedicated - 2 Wire Voice Grade - Per Mile or Fraction Mile			UEPPX	U1TVM	0.0091	0.00	0.00								
2-WIRE VOICE GRADE LOOP WITH 2-WIRE ANALOG LINE COIN PORT																
UNE Port/Loop Combination Rates																
	2-Wire VG Coin Port/Loop Combo – Zone 1		1			10.94										
	2-Wire VG Coin Port/Loop Combo – Zone 2		2			15.05										
	2-Wire VG Coin Port/Loop Combo – Zone 3		3			25.80										
UNE Loop Rates																
	2-Wire Voice Grade Loop (SL1) - Zone 1		1	UEPCO	UEPLX	9.77										
	2-Wire Voice Grade Loop (SL1) - Zone 2		2	UEPCO	UEPLX	13.88										
	2-Wire Voice Grade Loop (SL1) - Zone 3		3	UEPCO	UEPLX	24.63										
2-Wire Voice Grade Line Ports (COIN)																
	2-Wire Coin 2-Way with Operator Screening and Blocking: 011, 900/976, 1+DDD (FL)			UEPCO	UEP2F	1.17	53.31	26.46	27.50	8.37						
	2-Wire Coin 2-Way with Operator Screening and 011 Blocking (FL)			UEPCO	UEPFA	1.17	53.31	26.46	27.50	8.37						
	2-Wire Coin 2-Way with Operator Screening and Blocking: 900/976, 1+DDD, 011+, and Local (FL)			UEPCO	UEPCG	1.17	53.31	26.46	27.50	8.37						
	2-Wire Coin Outward with Operator Screening and 011 Blocking (AL, FL)			UEPCO	UEPRK	1.17	53.31	26.46	27.50	8.37						

UNBUNDLED NETWORK ELEMENTS - Florida														Attachment: 2		Exhibit: A	
CATEGORY	RATE ELEMENTS	Interim	Zone	BCS	USOC	RATES ($)					Svc Order Submitted Elec per LSR	Svc Order Submitted Manually per LSR	Incremental Charge - Manual Svc Order vs. Electronic-1st	Incremental Charge - Manual Svc Order vs. Electronic-Add'l	Incremental Charge - Manual Svc Order vs. Electronic-Disc 1st	Incremental Charge - Manual Svc Order vs. Electronic-Disc Add'l
						Rec	Nonrecurring		Nonrecurring Disconnect		OSS Rates ($)					
							First	Add'l	First	Add'l	SOMEC	SOMAN	SOMAN	SOMAN	SOMAN	SOMAN
	2-Wire Coin Outward with Operator Screening and Blocking: 900/976, 1+DDD, 011+ (FL)			UEPCO	UEPOF	1.17	53.31	26.46	27.50	8.37						
	2-Wire Coin Outward with Operator Screening and Blocking: 900/976, 1+DDD, 011+, and Local (FL, GA)			UEPCO	UEPCQ	1.17	53.31	26.46	27.50	8.37						
	2-Wire 2-Way Smartline with 900/976 (all states except LA)			UEPCO	UEPCK	1.17	53.31	26.46	27.50	8.37						
	2-Wire Coin Outward Smartline with 900/976 (all states except LA)			UEPCO	UEPCR	1.17	53.31	26.46	27.50	8.37						
ADDITIONAL UNE COIN PORT/LOOP (RC)																
	UNE Coin Port/Loop Combo Usage (Flat Rate)			UEPCO	URECU	1.86	0.00	0.00	0.00	0.00						
LOCAL NUMBER PORTABILITY																
	Local Number Portability (1 per port)			UEPCO	LNPCX	0.35										
NONRECURRING CHARGES - CURRENTLY COMBINED																
	2-Wire Voice Grade Loop / Line Port Combination - Conversion - Switch-as-is			UEPCO	USAC2		0.102	0.102								
	2-Wire Voice Grade Loop / Line Port Combination - Conversion - Switch with change			UEPCO	USACC		0.102	0.102								
ADDITIONAL NRCs																
	2-Wire Voice Grade Loop/Line Port Combination - Subsequent Activity			UEPCO	USAS2		0.00	0.00								
	Unbundled Miscellaneous Rate Element, Tag Loop at End User Premise			UEPCO	URETL		8.33	0.83								
2-WIRE VOICE LOOP/ 2WIRE VOICE GRADE IO TRANSPORT/ 2-WIRE LINE PORT (RES)																
UNE Port/Loop Combination Rates																
	2-Wire VG Loop/IO Tranport/Port Combo - Zone 1		1			13.64										
	2-Wire VG Loop/IO Tranport/Port Combo - Zone 2		2			18.80										
	2-Wire VG Loop/IO Tranport/Port Combo - Zone 3		3			32.27										
UNE Loop Rates																
	2-Wire Voice Grade Loop (SL2) - Zone 1		1	UEPFR	UECF2	12.24										
	2-Wire Voice Grade Loop (SL2) - Zone 2		2	UEPFR	UECF2	17.40										
	2-Wire Voice Grade Loop (SL2) - Zone 3		3	UEPFR	UECF2	30.87										
2-Wire Voice Grade Line Port Rates (Res)																
	2-Wire voice unbundled port - residence			UEPFR	UEPRL	1.40	174.81	100.65	75.88	12.73						
	2-Wire voice unbundled port with Caller ID - res			UEPFR	UEPRC	1.40	174.81	100.65	75.88	12.73						
	2-Wire voice unbundled port outgoing only - res			UEPFR	UEPRO	1.40	174.81	100.65	75.88	12.73						
	2-Wire voice unbundled Florida Area Calling with Caller ID - res			UEPFR	UEPAF	1.40	174.81	100.65	75.88	12.73						
	2-Wire voice unbundles res, low usage line port with Caller ID (LUM)			UEPFR	UEPAP	1.40	174.81	100.65	75.88	12.73						
INTEROFFICE TRANSPORT																
	Interoffice Transport - Dedicated - 2 Wire Voice Grade - Facility Termination			UEPFR	U1TV2	25.32	47.35	31.78								
	Interoffice Transport - Dedicated - 2 Wire Voice Grade - Per Mile or Fraction Mile			UEPFR	1L5XX	0.0091										
FEATURES																
	All Features Offered			UEPFR	UEPVF	2.26	0.00	0.00								
LOCAL NUMBER PORTABILITY																
	Local Number Portability (1 per port)			UEPFR	LNPCX	0.35										
NONRECURRING CHARGES (NRCs) - CURRENTLY COMBINED																
	2-Wire Loop / Dedicated IO Transport / 2 Wire Line Port Combination - Conversion - Switch-as-is			UEPFR	USAC2		16.97	3.73								
	2-Wire Loop / Dedicated IO Transport / 2 Wire Line Port Combination - Conversion - Switch-With-Change			UEPFR	USACC		16.97	3.73								
	Unbundled Miscellaneous Rate Element, Tag Designed Loop at End User Premise			UEPFR	URETN		11.21	1.10								
2-WIRE VOICE LOOP/ 2WIRE VOICE GRADE IO TRANSPORT/ 2-WIRE LINE PORT (BUS)																
UNE Port/Loop Combination Rates																
	2-Wire VG Loop/IO Tranport/Port Combo - Zone 1		1			13.64										
	2-Wire VG Loop/IO Tranport/Port Combo - Zone 2		2			18.80										
	2-Wire VG Loop/IO Tranport/Port Combo - Zone 3		3			32.27										

UNBUNDLED NETWORK ELEMENTS - Florida														Attachment: 2		Exhibit: A	
CATEGORY	RATE ELEMENTS	Interim	Zone	BCS	USOC	RATES ($)					Svc Order Submitted Elec per LSR	Svc Order Submitted Manually per LSR	Incremental Charge - Manual Svc Order vs. Electronic-1st	Incremental Charge - Manual Svc Order vs. Electronic-Add'l	Incremental Charge - Manual Svc Order vs. Electronic-Disc 1st	Incremental Charge - Manual Svc Order vs. Electronic-Disc Add'l
						Rec	Nonrecurring		Nonrecurring Disconnect		OSS Rates ($)					
							First	Add'l	First	Add'l	SOMEC	SOMAN	SOMAN	SOMAN	SOMAN	SOMAN
UNE Loop Rates																
	2-Wire Voice Grade Loop (SL2) - Zone 1		1	UEPFB	UECF2	12.24										
	2-Wire Voice Grade Loop (SL2) - Zone 2		2	UEPFB	UECF2	17.40										
	2-Wire Voice Grade Loop (SL2) - Zone 3		3	UEPFB	UECF2	30.87										
2-Wire Voice Grade Line Port (Bus)																
	2-Wire voice unbundled port without Caller ID - bus			UEPFB	UEPBL	1.40	174.81	100.65	75.88	12.73						
	2-Wire voice unbundled port with Caller + E484 ID - bus			UEPFB	UEPBC	1.40	174.81	100.65	75.88	12.73						
	2-Wire voice unbundled port outgoing only - bus			UEPFB	UEPBO	1.40	174.81	100.65	75.88	12.73						
	2-Wire voice unbundled incoming only port with Caller ID - Bus			UEPFB	UEPB1	1.40	174.81	100.65	75.88	12.73						
LOCAL NUMBER PORTABILITY																
	Local Number Portability (1 per port)			UEPFB	LNPCX	0.35										
INTEROFFICE TRANSPORT																
	Interoffice Transport - Dedicated - 2 Wire Voice Grade - Facility Termination			UEPFB	U1TV2	25.32	47.35	31.78								
	Interoffice Transport - Dedicated - 2 Wire Voice Grade - Per Mile or Fraction Mile			UEPFB	1L5XX	0.0091										
FEATURES																
	All Features Offered			UEPFB	UEPVF	2.26	0.00	0.00								
NONRECURRING CHARGES (NRCs) - CURRENTLY COMBINED																
	2-Wire Loop / Dedicated IO Transport / 2 Wire Line Port Combination - Conversion - Switch-as-is			UEPFB	USAC2		16.97	3.73								
	2-Wire Loop / Dedicated IO Transport / 2 Wire Line Port Combination - Conversion - Switch with change			UEPFB	USACC		16.97	3.73								
	Unbundled Miscellaneous Rate Element, Tag Designed Loop at End User Premise			UEPFB	URETN		11.21	1.10								
2-WIRE VOICE LOOP/ 2WIRE VOICE GRADE IO TRANSPORT/ 2-WIRE LINE PORT (PBX)																
UNE Port/Loop Combination Rates																
	2-Wire VG Loop/IO Tranport/Port Combo - Zone 1		1			13.64										
	2-Wire VG Loop/IO Tranport/Port Combo - Zone 2		2			18.80										
	2-Wire VG Loop/IO Tranport/Port Combo - Zone 3		3			32.27										
UNE Loop Rates																
	2-Wire Voice Grade Loop (SL2) - Zone 1		1	UEPFP	UECF2	12.24										
	2-Wire Voice Grade Loop (SL2) - Zone 2		2	UEPFP	UECF2	17.40										
	2-Wire Voice Grade Loop (SL2) - Zone 3		3	UEPFP	UECF2	30.87										
2-Wire Voice Grade Line Port Rates (BUS - PBX)																
	Line Side Unbundled Combination 2-Way PBX Trunk Port - Bus			UEPFP	UEPPC	1.40	174.81	100.65	75.88	12.73						
	Line Side Unbundled Outward PBX Trunk Port - Bus			UEPFP	UEPPO	1.40	174.81	100.65	75.88	12.73						
	Line Side Unbundled Incoming PBX Trunk Port - Bus			UEPFP	UEPP1	1.40	174.81	100.65	75.88	12.73						
	2-Wire Voice Unbundled PBX LD Terminal Ports			UEPFP	UEPLD	1.40	174.81	100.65	75.88	12.73						
	2-Wire Voice Unbundled 2-Way Combination PBX Usage Port			UEPFP	UEPXA	1.40	174.81	100.65	75.88	12.73						
	2-Wire Voice Unbundled PBX Toll Terminal Hotel Ports			UEPFP	UEPXB	1.40	174.81	100.65	75.88	12.73						
	2-Wire Voice Unbundled PBX LD DDD Terminals Port			UEPFP	UEPXC	1.40	174.81	100.65	75.88	12.73						
	2-Wire Voice Unbundled PBX LD Terminal Switchboard Port			UEPFP	UEPXD	1.40	174.81	100.65	75.88	12.73						
	2-Wire Voice Unbundled PBX LD Terminal Switchboard IDD Capable Port			UEPFP	UEPXE	1.40	174.81	100.65	75.88	12.73						
	2-Wire Voice Unbundled 2-Way PBX Hotel/Hospital Economy Administrative Calling Port			UEPFP	UEPXL	1.40	174.81	100.65	75.88	12.73						
	2-Wire Voice Unbundled 2-Way PBX Hotel/Hospital Economy Room Calling Port			UEPFP	UEPXM	1.40	174.81	100.65	75.88	12.73						
	2-Wire Voice Unbundled 1-Way Outgoing PBX Hotel/Hospital Discount Room Calling Port			UEPFP	UEPXO	1.40	174.81	100.65	75.88	12.73						
	2-Wire Voice Unbundled 1-Way Outgoing PBX Measured Port			UEPFP	UEPXS	1.40	174.81	100.65	75.88	12.73						
LOCAL NUMBER PORTABILITY																
	Local Number Portability (1 per port)			UEPFP	LNPCP	3.15	0.00	0.00								
INTEROFFICE TRANSPORT																
	Interoffice Transport - Dedicated - 2 Wire Voice Grade - Facility Termination			UEPFP	U1TV2	25.32	47.35	31.78								

UNBUNDLED NETWORK ELEMENTS - Florida														Attachment: 2		Exhibit: A	
CATEGORY	RATE ELEMENTS	Interim	Zone	BCS	USOC	RATES ($)					Svc Order Submitted Elec per LSR	Svc Order Submitted Manually per LSR	Incremental Charge - Manual Svc Order vs. Electronic-1st	Incremental Charge - Manual Svc Order vs. Electronic-Add'l	Incremental Charge - Manual Svc Order vs. Electronic-Disc 1st	Incremental Charge - Manual Svc Order vs. Electronic-Disc Add'l
						Rec	Nonrecurring		Nonrecurring Disconnect		OSS Rates ($)					
							First	Add'l	First	Add'l	SOMEC	SOMAN	SOMAN	SOMAN	SOMAN	SOMAN
	Interoffice Transport - Dedicated - 2 Wire Voice Grade - Per Mile or Fraction Mile			UEPFP	1L5XX	0.0091										
FEATURES																
	All Features Offered			UEPFP	UEPVF	2.26	0.00	0.00								
NONRECURRING CHARGES (NRCs) - CURRENTLY COMBINED																
	2-Wire Loop / Dedicated IO Transport / 2 Wire Line Port Combination - Conversion - Switch-as-is			UEPFP	USAC2		16.97	3.73								
	2-Wire Loop / Dedicated IO Transport / 2 Wire Line Port Combination - Conversion - Switch with change			UEPFP	USACC		16.97	3.73								
	Unbundled Miscellaneous Rate Element, Tag Designed Loop at End User Premise			UEPFP	URETN		11.21	1.10								
UNBUNDLED PORT/LOOP COMBINATIONS - COST BASED RATES																
2-WIRE VOICE GRADE LOOP- BUS ONLY - WITH 2-WIRE DID TRUNK PORT																
UNE Port/Loop Combination Rates																
	2-Wire VG Loop/2-Wire DID Trunk Port Combo - UNE Zone 1		1			20.95										
	2-Wire VG Loop/2-Wire DID Trunk Port Combo - UNE Zone 2		2			26.11										
	2-Wire VG Loop/2-Wire DID Trunk Port Combo - UNE Zone 3		3			39.58										
UNE Loop Rates																
	2-Wire Analog Voice Grade Loop - (SL2) - UNE Zone 1		1	UEPPX	UECD1	12.24										
	2-Wire Analog Voice Grade Loop - (SL2) - UNE Zone 2		2	UEPPX	UECD1	17.40										
	2-Wire Analog Voice Grade Loop - (SL2) - UNE Zone 3		3	UEPPX	UECD1	30.87										
UNE Port Rate																
	Exchange Ports - 2-Wire DID Port			UEPPX	UEPD1	8.71	214.16	98.29								
NONRECURRING CHARGES - CURRENTLY COMBINED																
	2-Wire Voice Grade Loop / 2-Wire DID Trunk Port Combination - Switch-as-is			UEPPX	USAC1		7.85	1.87								
	2-Wire Voice Grade Loop / 2-Wire DID Trunk Port Conversion with BellSouth Allowable Changes			UEPPX	USA1C		7.85	1.87								
ADDITIONAL NRCs																
	2-Wire DID Subsequent Activity - Add Trunks, Per Trunk			UEPPX	USAS1		32.26	32.26								
	Unbundled Miscellaneous Rate Element, Tag Designed Loop at End User Premise			UEPPX	URETN		11.21	1.10								
Telephone Number/Trunk Group Establisment Charges																
	DID Trunk Termination (One Per Port)			UEPPX	NDT	0.00	0.00	0.00								
	DID Numbers, Establish Trunk Group and Provide First Group of 20 DID Numbers			UEPPX	NDZ	0.00	0.00	0.00								
	Additional DID Numbers for each Group of 20 DID Numbers			UEPPX	ND4	0.00	0.00	0.00								
	DID Numbers, Non- consecutive DID Numbers , Per Number			UEPPX	ND5	0.00	0.00	0.00								
	Reserve Non-Consecutive DID numbers			UEPPX	ND6	0.00	0.00	0.00								
	Reserve DID Numbers			UEPPX	NDV	0.00	0.00	0.00								
LOCAL NUMBER PORTABILITY																
	Local Number Portability (1 per port)			UEPPX	LNPCP	3.15	0.00	0.00								
2-WIRE ISDN DIGITAL GRADE LOOP WITH 2-WIRE ISDN DIGITAL LINE SIDE PORT																
UNE Port/Loop Combination Rates																
	2W ISDN Digital Grade Loop/2W ISDN Digital Line Side Port - UNE Zone 1		1	UEPPB UEPPR		22.63										
	2W ISDN Digital Grade Loop/2W ISDN Digital Line Side Port - UNE Zone 2		2	UEPPB UEPPR		29.05										
	2W ISDN Digital Grade Loop/2W ISDN Digital Line Side Port - UNE Zone 3		3	UEPPB UEPPR		45.84										
UNE Loop Rates																
	2-Wire ISDN Digital Grade Loop - UNE Zone 1		1	UEPPB UEPPR	USL2X	15.25										
	2-Wire ISDN Digital Grade Loop - UNE Zone 2		2	UEPPB UEPPR	USL2X	21.67										
	2-Wire ISDN Digital Grade Loop - UNE Zone 3		3	UEPPB UEPPR	USL2X	38.46										
UNE Port Rate																
	Exchange Port - 2-Wire ISDN Line Side Port			UEPPB UEPPR	UEPPB	7.38	194.52	145.09								
NONRECURRING CHARGES - CURRENTLY COMBINED																

UNBUNDLED NETWORK ELEMENTS - Florida													Attachment: 2		Exhibit: A	
CATEGORY	RATE ELEMENTS	Interim	Zone	BCS	USOC	RATES ($)					Svc Order Submitted Elec per LSR	Svc Order Submitted Manually per LSR	Incremental Charge - Manual Svc Order vs. Electronic-1st	Incremental Charge - Manual Svc Order vs. Electronic-Add'l	Incremental Charge - Manual Svc Order vs. Electronic-Disc 1st	Incremental Charge - Manual Svc Order vs. Electronic-Disc Add'l
						Rec	Nonrecurring		Nonrecurring Disconnect		OSS Rates ($)					
							First	Add'l	First	Add'l	SOMEC	SOMAN	SOMAN	SOMAN	SOMAN	SOMAN
	2-Wire ISDN Digital Grade Loop / 2-Wire ISDN Line Side Port Combination - Conversion			UEPPB UEPPR	USACB	0.00	25.22	17.00								
ADDITIONAL NRCs																
	Unbundled Miscellaneous Rate Element, Tag Designed Loop at End User Premise			UEPPB UEPPR	URETN		11.21	1.10								
	Unbundled Miscellaneous Rate Element, Tag Loop at End User Premise			UEPPB UEPPR	URETL		8.33	0.83								
LOCAL NUMBER PORTABILITY																
	Local Number Portability (1 per port)			UEPPB UEPPR	LNPCX	0.35	0.00	0.00								
B-CHANNEL USER PROFILE ACCESS:																
	CVS/CSD (DMS/5ESS)			UEPPB UEPPR	U1UCA	0.00	0.00	0.00								
	CVS (EWSD)			UEPPB UEPPR	U1UCB	0.00	0.00	0.00								
	CSD			UEPPB UEPPR	U1UCC	0.00	0.00	0.00								
B-CHANNEL AREA PLUS USER PROFILE ACCESS: (AL,KY,LA,MS SC,MS, & TN)																
USER TERMINAL PROFILE																
	User Terminal Profile (EWSD only)			UEPPB UEPPR	U1UMA	0.00	0.00	0.00								
VERTICAL FEATURES																
	All Vertical Features - One per Channel B User Profile			UEPPB UEPPR	UEPVF	2.26	0.00	0.00								
INTEROFFICE CHANNEL MILEAGE																
	Interoffice Channel mileage each, including first mile and facilities termination			UEPPB UEPPR	M1GNC	25.3291	47.35	31.78	18.31	7.03						
	Interoffice Channel mileage each, additional mile			UEPPB UEPPR	M1GNM	0.0091	0.00	0.00								
4-WIRE DS1 DIGITAL LOOP WITH 4-WIRE ISDN DS1 DIGITAL TRUNK PORT																
The UNE-P DS1 combination rates below for in this rate exhibit apply to the embedded base in place as of 10/2/03 until 4/1/04. After 4/1/04 these rates shall revert to tariff rates or a separate commercial agreement.																
Requests for 4-Wire DS1 Digital Loop with 4-Wire ISDN DS1 Digital Trunk Port after the effective date of this amendment shall be provided pursuant to a separate agreement or tariff at BellSouth's discretion.																
UNE Port/Loop Combination Rates																
	4W DS1 Digital Loop/4W ISDN DS1 Digital Trunk Port - UNE Zone 1		1	UEPPP		153.48										
	4W DS1 Digital Loop/4W ISDN DS1 Digital Trunk Port - UNE Zone 2		2	UEPPP		183.28										
	4W DS1 Digital Loop/4W ISDN DS1 Digital Trunk Port - UNE Zone 3		3	UEPPP		261.12										
UNE Loop Rates																
	4-Wire DS1 Digital Loop - UNE Zone 1		1	UEPPP	USL4P	70.74										
	4-Wire DS1 Digital Loop - UNE Zone 2		2	UEPPP	USL4P	100.54										
	4-Wire DS1 Digital Loop - UNE Zone 3		3	UEPPP	USL4P	178.38										
UNE Port Rate																
	Exchange Ports - 4-Wire ISDN DS1 Port (E:4/1/2004)			UEPPP	UEPPP	82.74	488.36	276.65								
NONRECURRING CHARGES - CURRENTLY COMBINED																
	4-Wire DS1 Digital Loop / 4-Wire ISDN DS1 Digital Trunk Port Combination - Conversion -Switch-as-is (E:4/1/2004)			UEPPP	USACP	0.00	84.17	61.38								
ADDITIONAL NRCs																
	4-Wire DS1 Loop/4-W ISDN Digtl Trk Port - Subsqt Actvy-Inward/two way Tel Nos. (except NC)			UEPPP	PR7TF		0.5412									
	4-Wire DS1 Loop / 4-Wire ISDN DS1 Digital Trunk Port - Outward Tel Numbers (All States except NC)			UEPPP	PR7TO		12.71	12.71								
	4-Wire DS1 Loop / 4-Wire ISDN DS1 Digital Trk Port - Subsequent Inward Tel Numbers			UEPPP	PR7ZT		25.42	25.42								
LOCAL NUMBER PORTABILITY																
	Local Number Portability (1 per port)			UEPPP	LNPCN	1.75										
INTERFACE (Provsioning Only)																
	Voice/Data			UEPPP	PR71V	0.00	0.00	0.00								
	Digital Data			UEPPP	PR71D	0.00	0.00	0.00								
	Inward Data			UEPPP	PR71E	0.00	0.00	0.00								
New or Additional "B" Channel																
	New or Additional - Voice/Data B Channel			UEPPP	PR7BV	0.00	15.48									
	New or Additional - Digital Data B Channel			UEPPP	PR7BF	0.00	15.48									
	New or Additional Inward Data B Channel			UEPPP	PR7BD	0.00	15.48									
CALL TYPES																

UNBUNDLED NETWORK ELEMENTS - Florida														Attachment: 2		Exhibit: A	
CATEGORY	RATE ELEMENTS	Interim	Zone	BCS	USOC	RATES ($)					Svc Order Submitted Elec per LSR	Svc Order Submitted Manually per LSR	Incremental Charge - Manual Svc Order vs. Electronic-1st	Incremental Charge - Manual Svc Order vs. Electronic-Add'l	Incremental Charge - Manual Svc Order vs. Electronic-Disc 1st	Incremental Charge - Manual Svc Order vs. Electronic-Disc Add'l
						Rec	Nonrecurring		Nonrecurring Disconnect		OSS Rates ($)					
							First	Add'l	First	Add'l	SOMEC	SOMAN	SOMAN	SOMAN	SOMAN	SOMAN
	Inward			UEPPP	PR7C1	0.00	0.00	0.00								
	Outward			UEPPP	PR7CO	0.00	0.00	0.00								
	Two-way			UEPPP	PR7CC	0.00	0.00	0.00								
Interoffice Channel Mileage																
	Fixed Each Including First Mile			UEPPP	1LN1A	88.6256	105.54	98.47	21.47	19.05						
	Each Airline-Fractional Additional Mile			UEPPP	1LN1B	0.1856										
4-WIRE DS1 DIGITAL LOOP WITH 4-WIRE DDITS TRUNK PORT																
The UNE-P DS1 combination rates below for in this rate exhibit apply to the embedded base in place as of 10/2/03 until 4/1/04. After 4/1/04 these rates shall revert to tariff rates or a separate commercial agreement.																
Requests for 4-Wire DS1 Digital Loop with 4-Wire DDITS after the effective date of this amendment shall be provided pursuant to a separate agreement or tariff at BellSouth's discretion.																
UNE Port/Loop Combination Rates																
	4W DS1 Digital Loop/4W DDITS Trunk Port - UNE Zone 1		1	UEPDC		125.69										
	4W DS1 Digital Loop/4W DDITS Trunk Port - UNE Zone 2		2	UEPDC		155.49										
	4W DS1 Digital Loop/4W DDITS Trunk Port - UNE Zone 3		3	UEPDC		233.33										
UNE Loop Rates																
	4-Wire DS1 Digital Loop - UNE Zone 1		1	UEPDC	USLDC	70.74										
	4-Wire DS1 Digital Loop - UNE Zone 2		2	UEPDC	USLDC	100.54										
	4-Wire DS1 Digital Loop - UNE Zone 3		3	UEPDC	USLDC	178.38										
UNE Port Rate																
	4-Wire DDITS Digital Trunk Port (E:4/1/2004)			UEPDC	UDD1T	54.95	464.86	259.23								
NONRECURRING CHARGES - CURRENTLY COMBINED																
	4-Wire DS1 Digital Loop / 4-Wire DDITS Trunk Port Combination - Switch-as-is (E:4/1/2004)			UEPDC	USAC4		95.31	46.71								
	4-Wire DS1 Digital Loop / 4-Wire DDITS Trunk Port Combination - Conversion with DS1 Changes (E:4/1/2004)			UEPDC	USAWA		95.31	46.71								
	4-Wire DS1 Digital Loop / 4-Wire DDITS Trunk Port Combination - Conversion with Change - Trunk (E:4/1/2004)			UEPDC	USAWB		95.31	46.71								
ADDITIONAL NRCs																
	4-Wire DS1 Loop / 4-Wire DDITS Trunk Port - NRC - Subsequent Channel Activation/Chan - 2-Way Trunk			UEPDC	UDTTA		15.69	15.69								
	4-Wire DS1 Loop / 4-Wire DDITS Trunk Port - Subsequent Channel Activation/Chan - 1-Way Outward Trunk			UEPDC	UDTTB		15.69	15.69								
	4-Wire DS1 Loop / 4-Wire DDITS Trunk Port - Subsqnt Channel Activation/Chan Inward Trunk w/out DID			UEPDC	UDTTC		15.69	15.69								
	4-Wire DS1 Loop / 4-Wire DDITS Trunk Port - Subsqnt Chan Activation Per Chan - Inward Trunk with DID			UEPDC	UDTTD		15.69	15.69								
	4-Wire DS1 Loop / 4-Wire DDITS Trunk Port - Subsqnt Chan Activation / Chan - 2-Way DID w User Trans			UEPDC	UDTTE		15.69	15.69								
BIPOLAR 8 ZERO SUBSTITUTION																
	B8ZS -Superframe Format			UEPDC	CCOSF		0.00i	655.00s								
	B8ZS - Extended Superframe Format			UEPDC	CCOEF		0.00i	655.00s								
Alternate Mark Inversion																
	AMI -Superframe Format			UEPDC	MCOSF		0.00	0.00								
	AMI - Extended SuperFrame Format			UEPDC	MCOPO		0.00	0.00								
Telephone Number/Trunk Group Establisment Charges																
	Telephone Number for 2-Way Trunk Group			UEPDC	UDTGX	0.00										
	Telephone Number for 1-Way Outward Trunk Group			UEPDC	UDTGY	0.00										
	Telephone Number for 1-Way Inward Trunk Group Without DID			UEPDC	UDTGZ	0.00										
	DID Numbers, Establish Trunk Group and Provide First Group of 20 DID Numbers			UEPDC	NDZ	0.00	0.00	0.00								
	DID Numbers for each Group of 20 DID Numbers			UEPDC	ND4	0.00										
	DID Numbers, Non- consecutive DID Numbers , Per Number			UEPDC	ND5	0.00										
	Reserve Non-Consecutive DID Nos.			UEPDC	ND6	0.00	0.00	0.00								
	Reserve DID Numbers			UEPDC	NDV	0.00	0.00	0.00								
Dedicated DS1 (Interoffice Channel Mileage) - FX/FCO for 4-Wire DS1 Digital Loop with 4-Wire DDITS Trunk Port																
	Interoffice Channel Mileage - Fixed rate 0-8 miles (Facilities Termination)			UEPDC	1LNO1	88.44	105.54	98.47	21.47	19.05						
	Interoffice Channel Mileage - Additional rate per mile - 0-8 miles			UEPDC	1LNOA	0.1856	0.00	0.00								

UNBUNDLED NETWORK ELEMENTS - Florida														Attachment: 2		Exhibit: A	
CATEGORY	RATE ELEMENTS	Interim	Zone	BCS	USOC	RATES ($)					Svc Order Submitted Elec per LSR	Svc Order Submitted Manually per LSR	Incremental Charge - Manual Svc Order vs. Electronic-1st	Incremental Charge - Manual Svc Order vs. Electronic-Add'l	Incremental Charge - Manual Svc Order vs. Electronic-Disc 1st	Incremental Charge - Manual Svc Order vs. Electronic-Disc Add'l
						Rec	Nonrecurring		Nonrecurring Disconnect		OSS Rates ($)					
							First	Add'l	First	Add'l	SOMEC	SOMAN	SOMAN	SOMAN	SOMAN	SOMAN
	Interoffice Channel Mileage - Fixed rate 9-25 miles (Facilities Termination)			UEPDC	1LNO2	0.00	0.00	0.00								
	Interoffice Channel Mileage - Additional rate per mile - 9-25 miles			UEPDC	1LNOB	0.1856	0.00	0.00								
	Interoffice Channel Mileage - Fixed rate 25+ miles (Facilities Termination)			UEPDC	1LNO3	0.00	0.00	0.00	0.00							
	Interoffice Channel Mileage - Additional rate per mile - 25+ miles			UEPDC	1LNOC	0.1856	0.00	0.00								
	Local Number Portability, per DS0 Activated			UEPDC	LNPCP	3.15	0.00	0.00	0.00							
	Central Office Termininating Point			UEPDC	CTG	0.00										
	4-WIRE DS1 LOOP WITH CHANNELIZATION WITH PORT															
	System is 1 DS1 Loop, 1 D4 Channel Bank, and up to 24 Feature Activations															
	Each System can have up to 24 combinations of rates depending on type and number of ports used															
	The UNE-P DS1 combination rates below for 4-Wire DS1 Loop with Channelization with Port in this rate exhibit apply to the embedded base in place as of 10/2/03 until 4/1/04. After 4/1/04 these rates shall revert to tariff rates or a separate agreement.															
	Requests for 4-Wire DS1 Loop with Channelization with Port after the effective date of this amendment shall be provided pursuant to a separate agreement or tariff at BellSouth's discretion.															
	UNE DS1 Loop															
	4-Wire DS1 Loop - UNE Zone 1		1	UEPMG	USLDC	70.74	0.00	0.00								
	4-Wire DS1 Loop - UNE Zone 2		2	UEPMG	USLDC	100.54	0.00	0.00								
	4-Wire DS1 Loop - UNE Zone 3		3	UEPMG	USLDC	178.38	0.00	0.00								
	UNE DSO Channelization Capacities (D4 Channel Bank Configurations)															
	24 DSO Channel Capacity - 1 per DS1			UEPMG	VUM24	118.06	0.00	0.00								
	48 DSO Channel Capacity - 1 per 2 DS1s			UEPMG	VUM48	236.12	0.00	0.00								
	96 DSO Channel Capacity -1per 4 DS1s			UEPMG	VUM96	472.24	0.00	0.00								
	144 DS0 Channel Capacity - 1 per 6 DS1s			UEPMG	VUM14	708.36	0.00	0.00								
	192 DS0 Channel Capacity -1 per 8 DS1s			UEPMG	VUM19	944.48	0.00	0.00								
	240 DS0 Channel Capacity - 1 per 10 DS1s			UEPMG	VUM2O	1,180.60	0.00	0.00								
	288 DS0 Channel Capacity - 1 per 12 DS1s			UEPMG	VUM28	1,416.72	0.00	0.00								
	384 DS0 Channel Capacity - 1 per 16 DS1s			UEPMG	VUM38	1,888.96	0.00	0.00								
	480 DS0 Channel Capacity - 1 per 20 DS1s			UEPMG	VUM4O	2,361.20	0.00	0.00								
	576 DS0 Channel Capacity -1 per 24 DS1s			UEPMG	VUM57	2,833.44	0.00	0.00								
	672 DS0 Channel Capacity - 1 per 28 DS1s			UEPMG	VUM67	3,305.68	0.00	0.00								
	Non-Recurring Charges (NRC) Associated with 4-Wire DS1 Loop with Channeliztion with Port - Conversion Charge Based on a System															
	A Minimum System configuration is One (1) DS1, One (1) D4 Channel Bank, and Up To 24 DSO Ports with Feature Activations.															
	Multiples of this configuration functioning as one are considered Add'l after the minimum system configuration is counted.															
	NRC - Conversion (Currently Combined) with or without BellSouth Allowed Changes			UEPMG	USAC4	0.00	96.77	4.24								
	System Additions at End User Locations Where 4-Wire DS1 Loop with Channelization with Port Combination Currently Exists and															
	New (Not Currently Combined) in all states, except in Density Zone 1 of Top 8 MSA's															
	1 DS1/D4 Channel Bank - Additionally Add NRC for each Port and Assoc Fea Activation (E:4/1/2004)			UEPMG	VUMD4	0.00	726.11	468.21	145.32	17.24						
	Bipolar 8 Zero Substitution															
	Clear Channel Capability Format, superframe - Subsequent Activity Only			UEPMG	CCOSF	0.00	0.00i	655.00s								
	Clear Channel Capability Format - Extended Superframe - Subsequent Activity Only			UEPMG	CCOEF	0.00	0.00i	655.00s								
	Alternate Mark Inversion (AMI)															
	Superframe Format			UEPMG	MCOSF	0.00	0.00	0.00								
	Extended Superframe Format			UEPMG	MCOPO	0.00	0.00	0.00								
	Exchange Ports Associated with 4-Wire DS1 Loop with Channelization with Port															
	Exchange Ports															
	Line Side Combination Channelized PBX Trunk Port - Business (E:4/1/2004)			UEPPX	UEPCX	1.40	0.00	0.00	0.00	0.00						
	Line Side Outward Channelized PBX Trunk Port - Business (E:4/1/2004)			UEPPX	UEPOX	1.40	0.00	0.00	0.00	0.00						
	Line Side Inward Only Channelized PBX Trunk Port without DID (E:4/1/2004)			UEPPX	UEP1X	1.40	0.00	0.00	0.00	0.00						
	2-Wire Trunk Side Unbundled Channelized DID Trunk Port (E:4/1/2004)			UEPPX	UEPDM	8.71	0.00	0.00	0.00	0.00						
	Feature Activations - Unbundled Loop Concentration															

UNBUNDLED NETWORK ELEMENTS - Florida														Attachment: 2		Exhibit: A	
CATEGORY	RATE ELEMENTS	Interim	Zone	BCS	USOC	RATES ($)					Svc Order Submitted Elec per LSR	Svc Order Submitted Manually per LSR	Incremental Charge - Manual Svc Order vs. Electronic-1st	Incremental Charge - Manual Svc Order vs. Electronic-Add'l	Incremental Charge - Manual Svc Order vs. Electronic-Disc 1st	Incremental Charge - Manual Svc Order vs. Electronic-Disc Add'l
						Rec	Nonrecurring		Nonrecurring Disconnect		OSS Rates ($)					
							First	Add'l	First	Add'l	SOMEC	SOMAN	SOMAN	SOMAN	SOMAN	SOMAN
	Feature (Service) Activation for each Line Port Terminated in D4 Bank			UEPPX	1PQWM	0.6402	25.40	13.41	3.96	3.93						
	Feature (Service) Activation for each Trunk Port Terminated in D4 Bank			UEPPX	1PQWU	0.6402	78.16	18.42	56.03	10.95						
	Telephone Number/ Group Establishment Charges for DID Service															
	DID Trunk Termination (1 per Port)			UEPPX	NDT	0.00	0.00	0.00								
	Estab Trk Grp and Provide 1st 20 DID Nos. (FL,GA, NC,& SC)			UEPPX	NDZ	0.00	0.00	0.00								
	DID Numbers - groups of 20 - Valid all States			UEPPX	ND4	0.00	0.00	0.00								
	Non-Consecutive DID Numbers - per number			UEPPX	ND5	0.00	0.00	0.00								
	Reserve Non-Consecutive DID Numbers			UEPPX	ND6	0.00	0.00	0.00								
	Reserve DID Numbers			UEPPX	NDV	0.00	0.00	0.00								
	Local Number Portability															
	Local Number Portability - 1 per port			UEPPX	LNPCP	3.15	0.00	0.00								
	FEATURES - Vertical and Optional															
	Local Switching Features Offered with Line Side Ports Only															
	All Features Available			UEPPX	UEPVF	2.26	0.00	0.00								
UNBUNDLED CENTREX PORT/LOOP COMBINATIONS - COST BASED RATES																
	1. Cost Based Rates are applied where BellSouth is required by FCC and/or State Commission rule to provide Unbundled Local Switching or Switch Ports.															
	2. Features shall apply to the Unbundled Port/Loop Combination - Cost Based Rate section in the same manner as they are applied to the Stand-Alone Unbundled Port section of this Rate Exhibit.															
	3. End Office and Tandem Switching Usage and Common Transport Usage rates in the Port section of this rate exhibit shall apply to all combinations of loop/port network elements except for UNE Coin Port/Loop Combinations.															
	4. The first and additional Port nonrecurring charges apply to Not Currently Combined Combos. For Currently Combined Combos, the nonrecurring charges shall be those identified in the Nonrecurring - Currently Combined sections. Additional NRCs may apply also and are categorized accordingly.															
	5. Market Rates for Unbundled Centrex Port/Loop Combination will be negotiated on an Individual Case Basis, until further notice.															
	UNE-P CENTREX - 1AESS - (Valid in AL,FL,GA,KY,LA,MS,&TN only)															
	2-Wire VG Loop/2-Wire Voice Grade Port (Centrex) Combo															
	UNE Port/Loop Combination Rates (Non-Design)															
	2-Wire VG Loop/2-Wire Voice Grade Port (Centrex) Port Combo - Non-Design		1	UEP91		10.94										
	2-Wire VG Loop/2-Wire Voice Grade Port (Centrex)Port Combo - Non-Design		2	UEP91		15.05										
	2-Wire VG Loop/2-Wire Voice Grade Port (Centrex)Port Combo - Non-Design		3	UEP91		25.80										
	UNE Port/Loop Combination Rates (Design)															
	2-Wire VG Loop/2-Wire Voice Grade Port (Centrex) Port Combo - Design		1	UEP91		13.41										
	2-Wire VG Loop/2-Wire Voice Grade Port (Centrex)Port Combo - Design		2	UEP91		18.57										
	2-Wire VG Loop/2-Wire Voice Grade Port (Centrex)Port Combo - Design		3	UEP91		32.04										
	UNE Loop Rate															
	2-Wire Voice Grade Loop (SL 1) - Zone 1		1	UEP91	UECS1	9.77										
	2-Wire Voice Grade Loop (SL 1) - Zone 2		2	UEP91	UECS1	13.88										
	2-Wire Voice Grade Loop (SL 1) - Zone 3		3	UEP91	UECS1	24.63										
	2-Wire Voice Grade Loop (SL 2) - Zone 1		1	UEP91	UECS2	12.24										
	2-Wire Voice Grade Loop (SL 2) - Zone 2		2	UEP91	UECS2	17.40										
	2-Wire Voice Grade Loop (SL 2) - Zone 3		3	UEP91	UECS2	30.87										
	UNE Ports															
	All States (Except North Carolina and Sout Carolina)															
	2-Wire Voice Grade Port (Centrex) Basic Local Area			UEP91	UEPYA	1.17	53.31	26.46	27.50	8.37						
	2-Wire Voice Grade Port (Centrex 800 termination)Basic Local Area			UEP91	UEPYB	1.17	53.31	26.46	27.50	8.37						
	2-Wire Voice Grade Port (Centrex with Caller ID)Note1 Basic Local Area			UEP91	UEPYH	1.17	53.31	26.46	27.50	8.37						
	2-Wire Voice Grade Port (Centrex from diff Serving Wire Center) Note 2, 3 Basic Local Area			UEP91	UEPYM	1.17	139.49	86.10	65.41	13.81						
	2-Wire Voice Grade Port, Diff Serving Wire Center - 800 Service Term - Basic Local Area			UEP91	UEPYZ	1.17	139.49	86.10	65.41	13.81						
	2-Wire Voice Grade Port terminated in on Megalink or equivalent - Basic Local Area			UEP91	UEPY9	1.17	53.31	26.46	27.50	8.37						

UNBUNDLED NETWORK ELEMENTS - Florida														Attachment: 2		Exhibit: A	
CATEGORY	RATE ELEMENTS	Interim	Zone	BCS	USOC	RATES ($)					Svc Order Submitted Elec per LSR	Svc Order Submitted Manually per LSR	Incremental Charge - Manual Svc Order vs. Electronic-1st	Incremental Charge - Manual Svc Order vs. Electronic-Add'l	Incremental Charge - Manual Svc Order vs. Electronic-Disc 1st	Incremental Charge - Manual Svc Order vs. Electronic-Disc Add'l
						Rec	Nonrecurring		Nonrecurring Disconnect		OSS Rates ($)					
							First	Add'l	First	Add'l	SOMEC	SOMAN	SOMAN	SOMAN	SOMAN	SOMAN
	2-Wire Voice Grade Port Terminated on 800 Service Term - Basic Local Area			UEP91	UEPY2	1.17	53.31	26.46	27.50	8.37						
Georgia and Florida Only																
	2-Wire Voice Grade Port (Centrex)			UEP91	UEPHA	1.17	53.31	26.46	27.50	8.37						
	2-Wire Voice Grade Port (Centrex 800 termination)			UEP91	UEPHB	1.17	53.31	26.46	27.50	8.37						
	2-Wire Voice Grade Port (Centrex with Caller ID)1			UEP91	UEPHH	1.17	53.31	26.46	27.50	8.37						
	2-Wire Voice Grade Port (Centrex from diff Serving Wire Center)2,3			UEP91	UEPHM	1.17	139.49	86.10	65.41	13.81						
	2-Wire Voice Grade Port, Diff Serving Wire Center 2,3 - 800 Service Term			UEP91	UEPHZ	1.17	139.49	86.10	65.41	13.81						
	2-Wire Voice Grade Port terminated in on Megalink or equivalent			UEP91	UEPH9	1.17	53.31	26.46	27.50	8.37						
	2-Wire Voice Grade Port Terminated on 800 Service Term			UEP91	UEPH2	1.17	53.31	26.46	27.50	8.37						
Local Switching																
	Centrex Intercom Funtionality, per port			UEP91	URECS	0.7384										
Local Number Portability																
	Local Number Portability (1 per port)			UEP91	LNPCC	0.35										
Features																
	All Standard Features Offered, per port			UEP91	UEPVF	2.26										
	All Select Features Offered, per port			UEP91	UEPVS	0.00	370.70									
	All Centrex Control Features Offered, per port			UEP91	UEPVC	2.26										
NARS																
	Unbundled Network Access Register - Combination			UEP91	UARCX	0.00	0.00	0.00	0.00	0.00						
	Unbundled Network Access Register - Indial			UEP91	UAR1X	0.00	0.00	0.00	0.00	0.00						
	Unbundled Network Access Register - Outdial			UEP91	UAROX	0.00	0.00	0.00	0.00	0.00						
Miscellaneous Terminations																
2-Wire Trunk Side																
	Trunk Side Terminations, each			UEP91	CENA6	8.73										
Interoffice Channel Mileage - 2-Wire																
	Interoffice Channel Facilities Termination - Voice Grade			UEP91	M1GBC	25.32										
	Interoffice Channel mileage, per mile or fraction of mile			UEP91	M1GBM	0.0091										
Feature Activations (DS0) Centrex Loops on Channelized DS1 Service																
D4 Channel Bank Feature Activations																
	Feature Activation on D-4 Channel Bank Centrex Loop Slot			UEP91	1PQWS	0.66										
	Feature Activation on D-4 Channel Bank FX line Side Loop Slot			UEP91	1PQW6	0.66										
	Feature Activation on D-4 Channel Bank FX Trunk Side Loop Slot			UEP91	1PQW7	0.66										
	Feature Activation on D-4 Channel Bank Centrex Loop Slot - Different Wire Center			UEP91	1PQWP	0.66										
	Feature Activation on D-4 Channel Bank Private Line Loop Slot			UEP91	1PQWV	0.66										
	Feature Activation on D-4 Channel Bank Tjie Line/Trunk Loop Slot			UEP91	1PQWQ	0.66										
	Feature Activation on D-4 Channel Bank WATS Loop Slot			UEP91	1PQWA	0.66										
Non-Recurring Charges (NRC) Associated with UNE-P Centrex																
	Conversion - Currently Combined Switch-As-Is with allowed changes, per port			UEP91	USAC2		21.50	8.42								
	Conversion of Existing Centrex Common Block			UEP91	USACN		5.17	8.32								
	New Centrex Standard Common Block			UEP91	M1ACS	0.00	618.82									
	New Centrex Customized Common Block			UEP91	M1ACC	0.00	618.82									
	Secondary Block, per Block			UEP91	M2CC1	0.00	71.31									
	NAR Establishment Charge, Per Occasion			UEP91	URECA	0.00	66.48									
UNE-P CENTREX - 5ESS (Valid in All States)																
2-Wire VG Loop/2-Wire Voice Grade Port (Centrex) Combo																
UNE Port/Loop Combination Rates (Non-Design)																
	2-Wire VG Loop/2-Wire Voice Grade Port (Centrex) Port Combo - Non-Design		1	UEP95		10.94										

UNBUNDLED NETWORK ELEMENTS - Florida														Attachment: 2		Exhibit: A	
CATEGORY	RATE ELEMENTS	Interim	Zone	BCS	USOC	RATES ($)					Svc Order Submitted Elec per LSR	Svc Order Submitted Manually per LSR	Incremental Charge - Manual Svc Order vs. Electronic-1st	Incremental Charge - Manual Svc Order vs. Electronic-Add'l	Incremental Charge - Manual Svc Order vs. Electronic-Disc 1st	Incremental Charge - Manual Svc Order vs. Electronic-Disc Add'l
						Rec	Nonrecurring		Nonrecurring Disconnect		OSS Rates ($)					
							First	Add'l	First	Add'l	SOMEC	SOMAN	SOMAN	SOMAN	SOMAN	SOMAN
	2-Wire VG Loop/2-Wire Voice Grade Port (Centrex)Port Combo - Non-Design		2	UEP95		15.05										
	2-Wire VG Loop/2-Wire Voice Grade Port (Centrex)Port Combo - Non-Design		3	UEP95		25.80										
UNE Port/Loop Combination Rates (Design)																
	2-Wire VG Loop/2-Wire Voice Grade Port (Centrex) Port Combo - Design		1	UEP95		13.41										
	2-Wire VG Loop/2-Wire Voice Grade Port (Centrex)Port Combo - Design		2	UEP95		18.57										
	2-Wire VG Loop/2-Wire Voice Grade Port (Centrex)Port Combo - Design		3	UEP95		32.04										
UNE Loop Rate																
	2-Wire Voice Grade Loop (SL 1) - Zone 1		1	UEP95	UECS1	9.77										
	2-Wire Voice Grade Loop (SL 1) - Zone 2		2	UEP95	UECS1	13.88										
	2-Wire Voice Grade Loop (SL 1) - Zone 3		3	UEP95	UECS1	24.63										
	2-Wire Voice Grade Loop (SL 2) - Zone 1		1	UEP95	UECS2	12.24										
	2-Wire Voice Grade Loop (SL 2) - Zone 2		2	UEP95	UECS2	17.40										
	2-Wire Voice Grade Loop (SL 2) - Zone 3		3	UEP95	UECS2	30.87										
UNE Port Rate																
All States																
	2-Wire Voice Grade Port (Centrex) Basic Local Area			UEP95	UEPYA	1.17	53.31	26.46	27.50	8.37						
	2-Wire Voice Grade Port (Centrex 800 termination)			UEP95	UEPYB	1.17	53.31	26.46	27.50	8.37						
	2-Wire Voice Grade Port (Centrex with Caller ID)1Basic Local Area			UEP95	UEPYH	1.17	53.31	26.46	27.50	8.37						
	2-Wire Voice Grade Port (Centrex from diff Serving Wire Center)2,3 Basic Local Area			UEP95	UEPYM	1.17	139.49	86.10	65.41	13.81						
	2-Wire Voice Grade Port, Diff Serving Wire Center 2,3 - 800 Service Term - Basic Local Area			UEP95	UEPYZ	1.17	139.49	86.10	65.41	13.81						
	2-Wire Voice Grade Port terminated in on Megalink or equivalent - Basic Local Area			UEP95	UEPY9	1.17	53.31	26.46	27.50	8.37						
	2-Wire Voice Grade Port Terminated on 800 Service Term - Basic Local Area			UEP95	UEPY2	1.17	53.31	26.46	27.50	8.37						
AL, KY, LA, MS, SC, & TN Only																
FL & GA Only																
	2-Wire Voice Grade Port (Centrex)			UEP95	UEPHA	1.17	53.31	26.46	27.50	8.37						
	2-Wire Voice Grade Port (Centrex 800 termination)			UEP95	UEPHB	1.17	53.31	26.46	27.50	8.37						
	2-Wire Voice Grade Port (Centrex with Caller ID)1			UEP95	UEPHH	1.17	53.31	26.46	27.50	8.37						
	2-Wire Voice Grade Port (Centrex from diff Serving Wire Center)2,3			UEP95	UEPHM	1.17	139.49	86.10	65.41	13.81						
	2-Wire Voice Grade Port, Diff Serving Wire Center - 800 Service Term 2,3			UEP95	UEPHZ	1.17	139.49	86.10	65.41	13.81						
	2-Wire Voice Grade Port terminated in on Megalink or equivalent			UEP95	UEPH9	1.17	53.31	26.46	27.50	8.37						
	2-Wire Voice Grade Port Terminated on 800 Service Term			UEP95	UEPH2	1.17	53.31	26.46	27.50	8.37						
Local Switching																
	Centrex Intercom Funtionality, per port			UEP95	URECS	0.7384										
Local Number Portability																
	Local Number Portability (1 per port)			UEP95	LNPCC	0.35										
Features																
	All Standard Features Offered, per port			UEP95	UEPVF	2.26										
	All Select Features Offered, per port			UEP95	UEPVS	0.00	370.70									
	All Centrex Control Features Offered, per port			UEP95	UEPVC	2.26										
NARS																
	Unbundled Network Access Register - Combination			UEP95	UARCX	0.00	0.00	0.00	0.00	0.00						
	Unbundled Network Access Register - Indial			UEP95	UAR1X	0.00	0.00	0.00	0.00	0.00						
	Unbundled Network Access Register - Outdial			UEP95	UAROX	0.00	0.00	0.00	0.00	0.00						
Miscellaneous Terminations																
2-Wire Trunk Side																
	Trunk Side Terminations, each			UEP95	CEND6	8.73										

UNBUNDLED NETWORK ELEMENTS - Florida														Attachment: 2		Exhibit: A	
CATEGORY	RATE ELEMENTS	Interim	Zone	BCS	USOC	RATES ($)					Svc Order Submitted Elec per LSR	Svc Order Submitted Manually per LSR	Incremental Charge - Manual Svc Order vs. Electronic-1st	Incremental Charge - Manual Svc Order vs. Electronic-Add'l	Incremental Charge - Manual Svc Order vs. Electronic-Disc 1st	Incremental Charge - Manual Svc Order vs. Electronic-Disc Add'l
						Rec	Nonrecurring		Nonrecurring Disconnect		OSS Rates ($)					
							First	Add'l	First	Add'l	SOMEC	SOMAN	SOMAN	SOMAN	SOMAN	SOMAN
4-Wire Digital (1.544 Megabits)																
	DS1 Circuit Terminations, each			UEP95	M1HD1	54.95										
	DS0 Channels Activated, each			UEP95	M1HDO	0.00	15.69									
Interoffice Channel Mileage - 2-Wire																
	Interoffice Channel Facilities Termination			UEP95	M1GBC	25.32										
	Interoffice Channel mileage, per mile or fraction of mile			UEP95	M1GBM	0.0091										
Feature Activations (DS0) Centrex Loops on Channelized DS1 Service																
D4 Channel Bank Feature Activations																
	Feature Activation on D-4 Channel Bank Centrex Loop Slot			UEP95	1PQWS	0.66										
	Feature Activation on D-4 Channel Bank FX line Side Loop Slot			UEP95	1PQW6	0.66										
	Feature Activation on D-4 Channel Bank FX Trunk Side Loop Slot			UEP95	1PQW7	0.66										
	Feature Activation on D-4 Channel Bank Centrex Loop Slot - Different Wire Center			UEP95	1PQWP	0.66										
	Feature Activation on D-4 Channel Bank Private Line Loop Slot			UEP95	1PQWV	0.66										
	Feature Activation on D-4 Channel Bank Tjie Line/Trunk Loop Slot			UEP95	1PQWQ	0.66										
	Feature Activation on D-4 Channel Bank WATS Loop Slot			UEP95	1PQWA	0.66										
Non-Recurring Charges (NRC) Associated with UNE-P Centrex																
	NRC Conversion Currently Combined Switch-As-Is with allowed changes, per port			UEP95	USAC2	0.00	21.50	8.42								
	Conversion of Existing Centrex Common Block, each			UEP95	USACN		5.17	8.32								
	New Centrex Standard Common Block			UEP95	M1ACS	0.00	618.82									
	New Centrex Customized Common Block			UEP95	M1ACC	0.00	618.82									
	NAR Establishment Charge, Per Occasion			UEP95	URECA	0.00	66.48									
Additional Non-Recurring Charges (NRC)																
	Unbundled Miscellaneous Rate Element, Tag Loop at End Use Premise			UEP95	URETL		8.33	0.83								
	Unbundled Miscellaneous Rate Element, Tag Design Loop at End Use Premise			UEP95	URETN		11.21	1.10								
UNE-P CENTREX - DMS100 (Valid in All States)																
2-Wire VG Loop/2-Wire Voice Grade Port (Centrex) Combo																
UNE Port/Loop Combination Rates (Non-Design)																
	2-Wire VG Loop/2-Wire Voice Grade Port (Centrex) Port Combo - Non-Design		1	UEP9D		10.94										
	2-Wire VG Loop/2-Wire Voice Grade Port (Centrex)Port Combo - Non-Design		2	UEP9D		15.05										
	2-Wire VG Loop/2-Wire Voice Grade Port (Centrex)Port Combo - Non-Design		3	UEP9D		25.80										
UNE Port/Loop Combination Rates (Design)																
	2-Wire VG Loop/2-Wire Voice Grade Port (Centrex) Port Combo - Design		1	UEP9D		13.41										
	2-Wire VG Loop/2-Wire Voice Grade Port (Centrex)Port Combo - Design		2	UEP9D		18.57										
	2-Wire VG Loop/2-Wire Voice Grade Port (Centrex)Port Combo - Design		3	UEP9D		32.04										
UNE Loop Rate																
	2-Wire Voice Grade Loop (SL 1) - Zone 1		1	UEP9D	UECS1	9.77										
	2-Wire Voice Grade Loop (SL 1) - Zone 2		2	UEP9D	UECS1	13.88										
	2-Wire Voice Grade Loop (SL 1) - Zone 3		3	UEP9D	UECS1	24.63										
	2-Wire Voice Grade Loop (SL 2) - Zone 1		1	UEP9D	UECS2	12.24										
	2-Wire Voice Grade Loop (SL 2) - Zone 2		2	UEP9D	UECS2	17.40										
	2-Wire Voice Grade Loop (SL 2) - Zone 3		3	UEP9D	UECS2	30.87										
UNE Port Rate																
ALL STATES																
	2-Wire Voice Grade Port (Centrex) Basic Local Area			UEP9D	UEPYA	1.17										

UNBUNDLED NETWORK ELEMENTS - Florida														Attachment: 2		Exhibit: A	
CATEGORY		RATE ELEMENTS	Interim	Zone	BCS	USOC	RATES ($)					Svc Order Submitted Elec per LSR	Svc Order Submitted Manually per LSR	Incremental Charge - Manual Svc Order vs. Electronic-1st	Incremental Charge - Manual Svc Order vs. Electronic-Add'l	Incremental Charge - Manual Svc Order vs. Electronic-Disc 1st	Incremental Charge - Manual Svc Order vs. Electronic-Disc Add'l
							Rec	Nonrecurring		Nonrecurring Disconnect		OSS Rates ($)					
								First	Add'l	First	Add'l	SOMEC	SOMAN	SOMAN	SOMAN	SOMAN	SOMAN
		2-Wire Voice Grade Port (Centrex 800 termination)Basic Local Area			UEP9D	UEPYB	1.17	53.31	26.46	27.50	8.37						
		2-Wire Voice Grade Port (Centrex / EBS-PSET)3Basic Local Area			UEP9D	UEPYC	1.17	53.31	26.46	27.50	8.37						
		2-Wire Voice Grade Port (Centrex / EBS-M5009)3Basic Local Area			UEP9D	UEPYD	1.17	53.31	26.46	27.50	8.37						
		2-Wire Voice Grade Port (Centrex / EBS-M5209))3 Basic Local Area			UEP9D	UEPYE	1.17	53.31	26.46	27.50	8.37						
		2-Wire Voice Grade Port (Centrex / EBS-M5112))3 Basic Local Area			UEP9D	UEPYF	1.17	53.31	26.46	27.50	8.37						
		2-Wire Voice Grade Port (Centrex / EBS-M5312))3Basic Local Area			UEP9D	UEPYG	1.17	53.31	26.46	27.50	8.37						
		2-Wire Voice Grade Port (Centrex / EBS-M5008))3 Basic Local Area			UEP9D	UEPYT	1.17	53.31	26.46	27.50	8.37						
		2-Wire Voice Grade Port (Centrex / EBS-M5208))3 Basic Local Area			UEP9D	UEPYU	1.17	53.31	26.46	27.50	8.37						
		2-Wire Voice Grade Port (Centrex / EBS-M5216))3 Basic Local Area			UEP9D	UEPYV	1.17	53.31	26.46	27.50	8.37						
		2-Wire Voice Grade Port (Centrex / EBS-M5316))3 Basic Local Area			UEP9D	UEPY3	1.17	53.31	26.46	27.50	8.37						
		2-Wire Voice Grade Port (Centrex with Caller ID) Basic Local Area			UEP9D	UEPYH	1.17	53.31	26.46	27.50	8.37						
		2-Wire Voice Grade Port (Centrex/Caller ID/Msg Wtg Lamp Indication))4 Basic Local Area			UEP9D	UEPYW	1.17	53.31	26.46	27.50	8.37						
		2-Wire Voice Grade Port (Centrex/Msg Wtg Lamp Indication))4 Basic Local Area			UEP9D	UEPYJ	1.17	53.31	26.46	27.50	8.37						
		2-Wire Voice Grade Port (Centrex from diff Serving Wire Center) 2,3-Basic Local Area			UEP9D	UEPYM	1.17	53.31	26.46	27.50	8.37						
		2-Wire Voice Grade Port (Centrex/differ SWC /EBS-PSET)2,3,4 Basic Local Area			UEP9D	UEPYO	1.17	53.31	26.46	27.50	8.37						
		2-Wire Voice Grade Port (Centrex/differ SWC /EBS-M5009)2,3,4 Basic Local Area			UEP9D	UEPYP	1.17	53.31	26.46	27.50	8.37						
		2-Wire Voice Grade Port (Centrex/differ SWC /EBS-5209)2,3,4 Basic Local Area			UEP9D	UEPYQ	1.17	139.49	86.10	65.41	13.81						
		2-Wire Voice Grade Port (Centrex/differ SWC /EBS-M5112)2,3,4 Basic Local Area			UEP9D	UEPYR	1.17	139.49	86.10	65.41	13.81						
		2-Wire Voice Grade Port (Centrex/differ SWC /EBS-M5312)2,3,4 Basic Local Area			UEP9D	UEPYS	1.17	139.49	86.10	65.41	13.81						
		2-Wire Voice Grade Port (Centrex/differ SWC /EBS-M5008)2,3,4 Basic Local Area			UEP9D	UEPY4	1.17	139.49	86.10	65.41	13.81						
		2-Wire Voice Grade Port (Centrex/differ SWC /EBS-M5208)2, 3 Basic Local Area			UEP9D	UEPY5	1.17	139.49	86.10	65.41	13.81						
		2-Wire Voice Grade Port (Centrex/differ SWC /EBS-M5216)2,3,4 Basic Local Area			UEP9D	UEPY6	1.17	139.49	86.10	65.41	13.81						
		2-Wire Voice Grade Port (Centrex/differ SWC /EBS-M5316)2,3,4 Basic Local Area			UEP9D	UEPY7	1.17	139.49	86.10	65.41	13.81						
		2-Wire Voice Grade Port, Diff Serving Wire Center - 800 Service Term 2,3			UEP9D	UEPYZ	1.17	139.49	86.10	65.41	13.81						
		2-Wire Voice Grade Port terminated in on Megalink or equivalent Basic Local Area			UEP9D	UEPY9	1.17	53.31	26.46	27.50	8.37						
		2-Wire Voice Grade Port Terminated on 800 Service Term Basic Local Area			UEP9D	UEPY2	1.17	53.31	26.46	27.50	8.37						
	FL & GA Only																
		2-Wire Voice Grade Port (Centrex)			UEP9D	UEPHA	1.17	53.31	26.46	27.50	8.37						
		2-Wire Voice Grade Port (Centrex 800 termination)			UEP9D	UEPHB	1.17	53.31	26.46	27.50	8.37						
		2-Wire Voice Grade Port (Centrex / EBS-PSET)4			UEP9D	UEPHC	1.17	53.31	26.46	27.50	8.37						
		2-Wire Voice Grade Port (Centrex / EBS-M5009)4			UEP9D	UEPHD	1.17	53.31	26.46	27.50	8.37						
		2-Wire Voice Grade Port (Centrex / EBS-M5209)4			UEP9D	UEPHE	1.17	53.31	26.46	27.50	8.37						
		2-Wire Voice Grade Port (Centrex / EBS-M5112)4			UEP9D	UEPHF	1.17	53.31	26.46	27.50	8.37						

UNBUNDLED NETWORK ELEMENTS - Florida														Attachment: 2		Exhibit: A	
CATEGORY		RATE ELEMENTS	Interim	Zone	BCS	USOC	RATES ($)					Svc Order Submitted Elec per LSR	Svc Order Submitted Manually per LSR	Incremental Charge - Manual Svc Order vs. Electronic-1st	Incremental Charge - Manual Svc Order vs. Electronic-Add'l	Incremental Charge - Manual Svc Order vs. Electronic-Disc 1st	Incremental Charge - Manual Svc Order vs. Electronic-Disc Add'l
							Rec	Nonrecurring		Nonrecurring Disconnect		OSS Rates ($)					
								First	Add'l	First	Add'l	SOMEC	SOMAN	SOMAN	SOMAN	SOMAN	SOMAN
		2-Wire Voice Grade Port (Centrex / EBS-M5312)4			UEP9D	UEPHG	1.17	53.31	26.46	27.50	8.37						
		2-Wire Voice Grade Port (Centrex / EBS-M5008)4			UEP9D	UEPHT	1.17	53.31	26.46	27.50	8.37						
		2-Wire Voice Grade Port (Centrex / EBS-M5208)4			UEP9D	UEPHU	1.17	53.31	26.46	27.50	8.37						
		2-Wire Voice Grade Port (Centrex / EBS-M5216)4			UEP9D	UEPHV	1.17	53.31	26.46	27.50	8.37						
		2-Wire Voice Grade Port (Centrex / EBS-M5316)4			UEP9D	UEPH3	1.17	53.31	26.46	27.50	8.37						
		2-Wire Voice Grade Port (Centrex with Caller ID)			UEP9D	UEPHH	1.17	53.31	26.46	27.50	8.37						
		2-Wire Voice Grade Port (Centrex/Caller ID/Msg Wtg Lamp Indication)4			UEP9D	UEPHW	1.17	53.31	26.46	27.50	8.37						
		2-Wire Voice Grade Port (Centrex/Msg Wtg Lamp Indication)4			UEP9D	UEPHJ	1.17	53.31	26.46	27.50	8.37						
		2-Wire Voice Grade Port (Centrex from diff Serving Wire Center) 2,3			UEP9D	UEPHM	1.17	139.49	86.10	65.41	13.81						
		2-Wire Voice Grade Port (Centrex/differ SWC /EBS-PSET)2,3,4			UEP9D	UEPHO	1.17	139.49	86.10	65.41	13.81						
		2-Wire Voice Grade Port (Centrex/differ SWC /EBS-M5009)2,3,4			UEP9D	UEPHP	1.17	139.49	86.10	65.41	13.81						
		2-Wire Voice Grade Port (Centrex/differ SWC /EBS-5209)2,3,4			UEP9D	UEPHQ	1.17	139.49	86.10	65.41	13.81						
		2-Wire Voice Grade Port (Centrex/differ SWC /EBS-M5112)2,3,4			UEP9D	UEPHR	1.17	139.49	86.10	65.41	13.81						
		2-Wire Voice Grade Port (Centrex/differ SWC /EBS-M5312)2, 3,4			UEP9D	UEPHS	1.17	139.49	86.10	65.41	13.81						
		2-Wire Voice Grade Port (Centrex/differ SWC /EBS-M5008)2,3,4			UEP9D	UEPH4	1.17	139.49	86.10	65.41	13.81						
		2-Wire Voice Grade Port (Centrex/differ SWC /EBS-M5208)2,3,4			UEP9D	UEPH5	1.17	139.49	86.10	65.41	13.81						
		2-Wire Voice Grade Port (Centrex/differ SWC /EBS-M5216)2,3,4			UEP9D	UEPH6	1.17	139.49	86.10	65.41	13.81						
		2-Wire Voice Grade Port (Centrex/differ SWC /EBS-M5316)2,3,4			UEP9D	UEPH7	1.17	139.49	86.10	65.41	13.81						
		2-Wire Voice Grade Port, Diff Serving Wire Center - 800 Service Term 2,3			UEP9D	UEPHZ	1.17	139.49	86.10	65.41	13.81						
		2-Wire Voice Grade Port terminated in on Megalink or equivalent			UEP9D	UEPH9	1.17	53.31	26.46	27.50	8.37						
		2-Wire Voice Grade Port Terminated on 800 Service Term			UEP9D	UEPH2	1.17	53.31	26.46	27.50	8.37						
	Local Switching																
		Centrex Intercom Funtionality, per port			UEP9D	URECS	0.7384										
	Local Number Portability																
		Local Number Portability (1 per port)			UEP9D	LNPCC	0.35										
	Features																
		All Standard Features Offered, per port			UEP9D	UEPVF	2.26										
		All Select Features Offered, per port			UEP9D	UEPVS	0.00	370.70									
		All Centrex Control Features Offered, per port			UEP9D	UEPVC	2.26										
	NARS																
		Unbundled Network Access Register - Combination			UEP9D	UARCX	0.00	0.00	0.00	0.00	0.00						
		Unbundled Network Access Register - Inward			UEP9D	UAR1X	0.00	0.00	0.00	0.00	0.00						
		Unbundled Network Access Register - Outdial			UEP9D	UAROX	0.00	0.00	0.00	0.00	0.00						
	Miscellaneous Terminations																
	2-Wire Trunk Side																
		Trunk Side Terminations, each			UEP9D	CEND6	8.73										
	4-Wire Digital (1.544 Megabits)																
		DS1 Circuit Terminations, each			UEP9D	M1HD1	54.95										
		DS0 Channels Activiated per Channel			UEP9D	M1HDO	0.00	15.69									
	Interoffice Channel Mileage - 2-Wire																
		Interoffice Channel Facilities Termination			UEP9D	M1GBC	25.32										
		Interoffice Channel mileage, per mile or fraction of mile			UEP9D	M1GBM	0.0091										
	Feature Activations (DS0) Centrex Loops on Channelized DS1 Service																
	D4 Channel Bank Feature Activations																
		Feature Activation on D-4 Channel Bank Centrex Loop Slot			UEP9D	1PQWS	0.66										

UNBUNDLED NETWORK ELEMENTS - Florida														Attachment: 2		Exhibit: A	
CATEGORY		RATE ELEMENTS	Interim	Zone	BCS	USOC	RATES ($)					Svc Order Submitted Elec per LSR	Svc Order Submitted Manually per LSR	Incremental Charge - Manual Svc Order vs. Electronic-1st	Incremental Charge - Manual Svc Order vs. Electronic-Add'l	Incremental Charge - Manual Svc Order vs. Electronic-Disc 1st	Incremental Charge - Manual Svc Order vs. Electronic-Disc Add'l
							Rec	Nonrecurring		Nonrecurring Disconnect		OSS Rates ($)					
								First	Add'l	First	Add'l	SOMEC	SOMAN	SOMAN	SOMAN	SOMAN	SOMAN
		Feature Activation on D-4 Channel Bank FX line Side Loop Slot			UEP9D	1PQW6	0.66										
		Feature Activation on D-4 Channel Bank FX Trunk Side Loop Slot			UEP9D	1PQW7	0.66										
		Feature Activation on D-4 Channel Bank Centrex Loop Slot - Different Wire Center			UEP9D	1PQWP	0.66										
		Feature Activation on D-4 Channel Bank Private Line Loop Slot			UEP9D	1PQWV	0.66										
		Feature Activation on D-4 Channel Bank Tjie Line/Trunk Loop Slot			UEP9D	1PQWQ	0.66										
		Feature Activation on D-4 Channel Bank WATS Loop Slot			UEP9D	1PQWA	0.66										
	Non-Recurring Charges (NRC) Associated with UNE-P Centrex																
		NRC Conversion Currently Combined Switch-As-Is with allowed changes, per port			UEP9D	USAC2		21.50	8.42								
		Conversion of existing Centrex Common Block, each			UEP9D	USACN		5.17	8.32								
		New Centrex Standard Common Block			UEP9D	M1ACS	0.00	618.82									
		New Centrex Customized Common Block			UEP9D	M1ACC	0.00	618.82									
		NAR Establishment Charge, Per Occasion			UEP9D	URECA	0.00	66.48									
	Additional Non-Recurring Charges (NRC)																
		Unbundled Miscellaneous Rate Element, Tag Loop at End Use Premise			UEP9D	URETL		8.33	0.83								
		Unbundled Miscellaneous Rate Element, Tag Design Loop at End Use Premise			UEP9D	URETN		11.21	1.10								
	UNE-P CENTREX - EWSD (Valid in AL, FL, KY, LA, MS & TN)																
	2-Wire VG Loop/2-Wire Voice Grade Port (Centrex) Combo																
	UNE Port/Loop Combination Rates (Non-Design)																
		2-Wire VG Loop/2-Wire Voice Grade Port (Centrex) Port Combo - Non-Design		1	UEP9E		10.94										
		2-Wire VG Loop/2-Wire Voice Grade Port (Centrex)Port Combo - Non-Design		2	UEP9E		15.05										
		2-Wire VG Loop/2-Wire Voice Grade Port (Centrex)Port Combo - Non-Design		3	UEP9E		25.80										
	UNE Port/Loop Combination Rates (Design)																
		2-Wire VG Loop/2-Wire Voice Grade Port (Centrex) Port Combo - Design		1	UEP9E		13.41										
		2-Wire VG Loop/2-Wire Voice Grade Port (Centrex)Port Combo - Design		2	UEP9E		18.57										
		2-Wire VG Loop/2-Wire Voice Grade Port (Centrex)Port Combo - Design		3	UEP9E		32.04										
	UNE Loop Rate																
		2-Wire Voice Grade Loop (SL 1) - Zone 1		1	UEP9E	UECS1	9.77										
		2-Wire Voice Grade Loop (SL 1) - Zone 2		2	UEP9E	UECS1	13.88										
		2-Wire Voice Grade Loop (SL 1) - Zone 3		3	UEP9E	UECS1	24.63										
		2-Wire Voice Grade Loop (SL 2) - Zone 1		1	UEP9E	UECS2	12.24										
		2-Wire Voice Grade Loop (SL 2) - Zone 2		2	UEP9E	UECS2	17.40										
		2-Wire Voice Grade Loop (SL 2) - Zone 3		3	UEP9E	UECS2	30.87										
	UNE Port Rate																
	AL, FL, KY, LA, MS, & TN only																
		2-Wire Voice Grade Port (Centrex) Basic Local Area			UEP9E	UEPYA	1.17	53.31	26.46	27.50	8.37						
		2-Wire Voice Grade Port (Centrex 800 termination)Basic Local Area			UEP9E	UEPYB	1.17	53.31	26.46	27.50	8.37						
		2-Wire Voice Grade Port (Centrex with Caller ID)1Basic Local Area			UEP9E	UEPYH	1.17	53.31	26.46	27.50	8.37						
		2-Wire Voice Grade Port (Centrex from diff Serving Wire Center)2,3 Basic Local Area			UEP9E	UEPYM	1.17	139.49	86.10	65.41	13.81						
		2-Wire Voice Grade Port, Diff Serving Wire Center 2,3 - 800 Service Term - Basic Local Area			UEP9E	UEPYZ	1.17	139.49	86.10	65.41	13.81						
		2-Wire Voice Grade Port terminated in on Megalink or equivalent - Basic Local Area			UEP9E	UEPY9	1.17	53.31	26.46	27.50	8.37						

UNBUNDLED NETWORK ELEMENTS - Florida														Attachment: 2		Exhibit: A	
CATEGORY		RATE ELEMENTS	Interim	Zone	BCS	USOC	RATES ($)					Svc Order Submitted Elec per LSR	Svc Order Submitted Manually per LSR	Incremental Charge - Manual Svc Order vs. Electronic-1st	Incremental Charge - Manual Svc Order vs. Electronic-Add'l	Incremental Charge - Manual Svc Order vs. Electronic-Disc 1st	Incremental Charge - Manual Svc Order vs. Electronic-Disc Add'l
							Rec	Nonrecurring		Nonrecurring Disconnect		OSS Rates ($)					
								First	Add'l	First	Add'l	SOMEC	SOMAN	SOMAN	SOMAN	SOMAN	SOMAN
		2-Wire Voice Grade Port Terminated on 800 Service Term - Basic Local Area			UEP9E	UEPY2	1.17	53.31	26.46	27.50	8.37						
	Florida Only																
		2-Wire Voice Grade Port (Centrex)			UEP9E	UEPHA	1.17	53.31	26.46	27.50	8.37						
		2-Wire Voice Grade Port (Centrex 800 termination)			UEP9E	UEPHB	1.17	53.31	26.46	27.50	8.37						
		2-Wire Voice Grade Port (Centrex with Caller ID)1			UEP9E	UEPHH	1.17	53.31	26.46	27.50	8.37						
		2-Wire Voice Grade Port (Centrex from diff Serving Wire Center)2,3			UEP9E	UEPHM	1.17	139.49	86.10	65.41	13.81						
		2-Wire Voice Grade Port, Diff Serving Wire Center - 800 Service Term 2,3			UEP9E	UEPHZ	1.17	139.49	86.10	65.41	13.81						
		2-Wire Voice Grade Port terminated in on Megalink or equivalent			UEP9E	UEPH9	1.17	53.31	26.46	27.50	8.37						
		2-Wire Voice Grade Port Terminated on 800 Service Term			UEP9E	UEPH2	1.17	53.31	26.46	27.50	8.37						
	Local Switching																
		Centrex Intercom Funtionality, per port			UEP9E	URECS	0.7384										
	Local Number Portability																
		Local Number Portability (1 per port)			UEP9E	LNPCC	0.35										
	Features																
		All Standard Features Offered, per port			UEP9E	UEPVF	2.26										
		All Select Features Offered, per port			UEP9E	UEPVS	0.00	370.70									
		All Centrex Control Features Offered, per port			UEP9E	UEPVC	2.26										
	NARS																
		Unbundled Network Access Register - Combination			UEP9E	UARCX	0.00	0.00	0.00	0.00	0.00						
		Unbundled Network Access Register - Indial			UEP9E	UAR1X	0.00	0.00	0.00	0.00	0.00						
		Unbundled Network Access Register - Outdial			UEP9E	UAROX	0.00	0.00	0.00	0.00	0.00						
	Miscellaneous Terminations																
	2-Wire Trunk Side																
		Trunk Side Terminations, each			UEP9E	CEND6	8.73										
	4-Wire Digital (1.544 Megabits)																
		DS1 Circuit Terminations, each			UEP9E	M1HD1	54.95										
		DS0 Channel Activated Per Channel			UEP9E	M1HDO	0.00	15.69									
	Interoffice Channel Mileage - 2-Wire																
		Interoffice Channel Facilities Termination			UEP9E	M1GBC	25.32										
		Interoffice Channel mileage, per mile or fraction of mile			UEP9E	M1GBM	0.0091										
	Feature Activations (DS0) Centrex Loops on Channelized DS1 Service																
	D4 Channel Bank Feature Activations																
		Feature Activation on D-4 Channel Bank Centrex Loop Slot			UEP9E	1PQWS	0.66										
		Feature Activation on D-4 Channel Bank FX line Side Loop Slot			UEP9E	1PQW6	0.66										
		Feature Activation on D-4 Channel Bank FX Trunk Side Loop Slot			UEP9E	1PQW7	0.66										
		Feature Activation on D-4 Channel Bank Centrex Loop Slot - Different Wire Center			UEP9E	1PQWP	0.66										
		Feature Activation on D-4 Channel Bank Private Line Loop Slot			UEP9E	1PQWV	0.66										
		Feature Activation on D-4 Channel Bank Tjie Line/Trunk Loop Slot			UEP9E	1PQWQ	0.66										
		Feature Activation on D-4 Channel Bank WATS Loop Slot			UEP9E	1PQWA	0.66										
	Non-Recurring Charges (NRC) Associated with UNE-P Centrex																
		NRC Conversion Currently Combined Switch-As-Is with allowed changes, per port			UEP9E	USAC2		21.50	8.42								
		Conversion of Existing Centrex Common Block, each			UEP9E	USACN		5.17	8.32								
		New Centrex Standard Common Block			UEP9E	M1ACS	0.00	618.82									
		New Centrex Customized Common Block			UEP9E	M1ACC	0.00	618.82									
		NAR Establishment Charge, Per Occasion			UEP9E	URECA	0.00	66.48									
	Additional Non-Recurring Charges (NRC)																
		Unbundled Miscellaneous Rate Element, Tag Loop at End Use Premise			UEP9E	URETL		8.33	0.83								

UNBUNDLED NETWORK ELEMENTS - Florida														Attachment: 2		Exhibit: A	
CATEGORY		RATE ELEMENTS	Interim	Zone	BCS	USOC	RATES ($)					Svc Order Submitted Elec per LSR	Svc Order Submitted Manually per LSR	Incremental Charge - Manual Svc Order vs. Electronic-1st	Incremental Charge - Manual Svc Order vs. Electronic-Add'l	Incremental Charge - Manual Svc Order vs. Electronic-Disc 1st	Incremental Charge - Manual Svc Order vs. Electronic-Disc Add'l
							Rec	Nonrecurring		Nonrecurring Disconnect		OSS Rates ($)					
								First	Add'l	First	Add'l	SOMEC	SOMAN	SOMAN	SOMAN	SOMAN	SOMAN
		Unbundled Miscellaneous Rate Element, Tag Design Loop at End Use Premise			UEP9E	URETN		11.21	1.10								
	Note 1 - Required Port for Centrex Control in 1AESS, 5ESS & EWSD																
	Note 2 - Requres Interoffice Channel Mileage																
	Note 3 - Installation is combination of Installation charge for SL2 Loop and Port																
	Note 4 - Requires Specific Customer Premises Equipment																
	Note: Rates displaying an "R" in Interim column are interim and subject to rate true-up as set forth in General Terms and Conditions.																

UNBUNDLED NETWORK ELEMENTS - Georgia														Attachment: 2		Exhibit: A	
CATEGORY		RATE ELEMENTS	Interim	Zone	BCS	USOC	RATES ($)					Svc Order Submitted Elec per LSR	Svc Order Submitted Manually per LSR	Incremental Charge - Manual Svc Order vs. Electronic-1st	Incremental Charge - Manual Svc Order vs. Electronic-Add'l	Incremental Charge - Manual Svc Order vs. Electronic-Disc 1st	Incremental Charge - Manual Svc Order vs. Electronic-Disc Add'l
							Rec	Nonrecurring		Nonrecurring Disconnect		OSS Rates ($)					
								First	Add'l	First	Add'l	SOMEC	SOMAN	SOMAN	SOMAN	SOMAN	SOMAN
	The "Zone" shown in the sections for stand-alone loops or loops as part of a combination refers to Geographically Deaveraged UNE Zones. To view Geographically Deaveraged UNE Zone Designations by Central Office, refer to internet Website: http://www.interconnection.bellsouth.com/become_a_clec/html/interconnection.htm																
OPERATIONAL SUPPORT SYSTEMS (OSS) - "REGIONAL RATES"																	
	NOTE: (1) CLEC should contact its contract negotiator if it prefers the "state specific" OSS charges as ordered by the State Commissions. The OSS charges currently contained in this rate exhibit are the BellSouth "regional" service ordering charges. CLEC may elect either the state specific Commission ordered rates for the service ordering charges, or CLEC may elect the regional service ordering charge, however, CLEC can not obtain a mixture of the two regardless if CLEC has a interconnection contract established in each of the 9 states.																
	NOTE: (2) Any element that can be ordered electronically will be billed according to the SOMEC rate listed in this category. Please refer to BellSouth's Local Ordering Handbook (LOH) to determine if a product can be ordered electronically. For those elements that cannot be ordered electronically at present per the LOH, the listed SOMEC rate in this category reflects the charge that would be billed to a CLEC once electronic ordering capabilities come on-line for that element. Otherwise, the manual ordering charge, SOMAN, will be applied to a CLECs bill when it submits an LSR to BellSouth.																
		OSS - Electronic Service Order Charge, Per Local Service Request (LSR) - UNE Only				SOMEC		3.50	0.00	3.50	0.00						
		OSS - Manual Service Order Charge, Per Local Service Request (LSR) - UNE Only				SOMAN		11.73	0.00	6.13	0.00						
UNE SERVICE DATE ADVANCEMENT CHARGE																	
	NOTE: The Expedite charge will be maintained commensurate with BellSouth's FCC No.1 Tariff, Section 5 as applicable.																
		UNE Expedite Charge per Circuit or Line Assignable USOC, per Day			UAL, UEANL, UCL, UEF, UDC, UDF, UEQ, UDL, UENTW, UDN, UEA, UHL, ULC, USL, U1T12, U1T48, U1TD1, U1TD3, U1TDX, U1TO3, U1TS1, U1TVX, UC1BC, UC1BL, UC1CC, UC1CL, UC1DC, UC1DL, UC1EC, UC1EL, UC1FC, UC1FL, UC1GC, UC1GL, UC1HC, UC1HL, UDL12, UDL48, UDLO3, UDLSX, UE3, ULD12, ULD48, ULDD1, ULDD3, ULDDX, ULDO3, ULDS1, ULDVX, UNC1X, UNC3X, UNCDX, UNCNX, UNCSX, UNCVX, UNLD1, UNLD3, UXTD1, UXTD3, UXTS1, U1TUC, U1TUD, U1TUB, U1TUA	SDASP		200.00									
UNBUNDLED EXCHANGE ACCESS LOOP																	
	2-WIRE ANALOG VOICE GRADE LOOP																
		2-Wire Analog Voice Grade Loop - Service Level 1- Zone 1		1	UEANL	UEAL2	10.51	40.02	9.99	5.61	1.72						
		2-Wire Analog Voice Grade Loop - Service Level 1- Zone 2		2	UEANL	UEAL2	15.85	40.02	9.99	5.61	1.72						
		2-Wire Analog Voice Grade Loop - Service Level 1- Zone 3		3	UEANL	UEAL2	31.97	40.02	9.99	5.61	1.72						
		2-Wire Analog Voice Grade Loop - Service Level 1- Zone 1		1	UEANL	UEASL	10.51	40.02	9.99	5.61	1.72						
		2-Wire Analog Voice Grade Loop - Service Level 1- Zone 2		2	UEANL	UEASL	15.85	40.02	9.99	5.61	1.72						
		2-Wire Analog Voice Grade Loop - Service Level 1- Zone 3		3	UEANL	UEASL	31.97	40.02	9.99	5.61	1.72						
		Unbundled Miscellaneous Rate Element, Tag Loop at End User Premise			UEANL	URETL		8.33	0.83								
		Loop Testing - Basic 1st Half Hour			UEANL	URET1		25.12	25.12								
		Loop Testing - Basic Additional Half Hour			UEANL	URETA		13.62	13.62								

UNBUNDLED NETWORK ELEMENTS - Georgia														Attachment: 2		Exhibit: A	
CATEGORY	RATE ELEMENTS	Interim	Zone	BCS	USOC	RATES ($)					Svc Order Submitted Elec per LSR	Svc Order Submitted Manually per LSR	Incremental Charge - Manual Svc Order vs. Electronic-1st	Incremental Charge - Manual Svc Order vs. Electronic-Add'l	Incremental Charge - Manual Svc Order vs. Electronic-Disc 1st	Incremental Charge - Manual Svc Order vs. Electronic-Disc Add'l
						Rec	Nonrecurring		Nonrecurring Disconnect		OSS Rates ($)					
							First	Add'l	First	Add'l	SOMEC	SOMAN	SOMAN	SOMAN	SOMAN	SOMAN
	CLEC to CLEC Conversion Charge Without Outside Dispatch (UVL-SL1)			UEANL	UREWO		15.75	8.92								
	Unbundled Voice Loop, Non-Design Voice Loop, billing for BST providing make-up (Engineering Information - E.I.)			UEANL	UEANM		7.30	7.30								
	Manual Order Coordiantion for UVL-SL1s (per loop)			UEANL	UEAMC		18.92	18.92								
	Order Coordination for Specified Conversion Time for UVL-SL1 (per LSR)			UEANL	OCOSL		57.79									
2-WIRE UNBUNDLED COPPER LOOP - NON-DESIGNED																
	2 Wire Unbundled Copper Loop Non-Designed- Zone 1		1	UEQ	UEQ2X	11.02	44.69	22.40	0.00	0.00						
	2 Wire Unbundled Copper Loop Non-Designed- Zone 2		2	UEQ	UEQ2X	12.72	44.69	22.40	0.00	0.00						
	2 Wire Unbundled Copper Loop Non-Designed-Zone 3		3	UEQ	UEQ2X	20.22	44.69	22.40	0.00	0.00						
	Unbundled Miscellaneous Rate Element, Tag Loop at End User Premise			UEQ	URETL		8.33	0.83								
	Manual Order Coordination 2 Wire Unbundled Copper Loop - Non-Designed (per loop)			UEQ	USBMC		18.92	18.92								
	Unbundled Copper Loop, Non-Design Copper Loop, billing for BST providing make-up (Engineering Information - E.I.)			UEQ	UEQMU		7.30	7.30								
	Loop Testing - Basic 1st Half Hour			UEQ	URET1		25.12	25.12								
	Loop Testing - Basic Additional Half Hour			UEQ	URETA		13.62	13.62								
	CLEC to CLEC Conversion Charge Without Outside Dispatch (UCL-ND)			UEQ	UREWO		14.25	7.42								
UNBUNDLED EXCHANGE ACCESS LOOP																
2-WIRE ANALOG VOICE GRADE LOOP																
UNE Loop Rates for Line Splitting (In Ga. PSC ordered the line splitting loop USOCs match the lower port- loop combo rates UEPLX)																
	2-Wire Voice Grade Loop (SL1) for Line Splitting - Zone 1	I	1	UEPSR UEPSB	UEALS	9.56	10.05	7.36	1.37	1.28						
	2-Wire Voice Grade Loop (SL1) for Line Splitting - Zone 1	I	1	UEPSR UEPSB	UEABS	9.56	10.05	7.36	1.37	1.28						
	2-Wire Voice Grade Loop (SL1) for Line Splitting - Zone 2	I	2	UEPSR UEPSB	UEALS	14.86	10.05	7.36	1.37	1.28						
	2-Wire Voice Grade Loop (SL1) for Line Splitting - Zone 2	I	2	UEPSR UEPSB	UEABS	14.86	10.05	7.36	1.37	1.28						
	2-Wire Voice Grade Loop (SL1)for Line Splitting - Zone 3	I	3	UEPSR UEPSB	UEALS	31.66	10.05	7.36	1.37	1.28						
	2-Wire Voice Grade Loop (SL1)for Line Splitting - Zone 3	I	3	UEPSR UEPSB	UEABS	31.66	10.05	7.36	1.37	1.28						
UNBUNDLED EXCHANGE ACCESS LOOP																
2-WIRE ANALOG VOICE GRADE LOOP																
	2-Wire Analog Voice Grade Loop - Service Level 2 w/Loop or Ground Start Signaling - Zone 1		1	UEA	UEAL2	11.57	79.85	24.65	18.92	7.87						
	2-Wire Analog Voice Grade Loop - Service Level 2 w/Loop or Ground Start Signaling - Zone 2		2	UEA	UEAL2	16.95	79.85	24.65	18.92	7.87						
	2-Wire Analog Voice Grade Loop - Service Level 2 w/Loop or Ground Start Signaling - Zone 3		3	UEA	UEAL2	33.08	79.85	24.65	18.92	7.87						
	Order Coordination for Specified Conversion Time (per LSR)			UEA	OCOSL		57.79									
	2-Wire Analog Voice Grade Loop - Service Level 2 w/Reverse Battery Signaling - Zone 1		1	UEA	UEAR2	11.57	79.85	24.65	18.92	7.87						
	2-Wire Analog Voice Grade Loop - Service Level 2 w/Reverse Battery Signaling - Zone 2		2	UEA	UEAR2	16.95	79.85	24.65	18.92	7.87						
	2-Wire Analog Voice Grade Loop - Service Level 2 w/Reverse Battery Signaling - Zone 3		3	UEA	UEAR2	33.08	79.85	24.65	18.92	7.87						
	Order Coordination for Specified Conversion Time (per LSR)			UEA	OCOSL		57.79									
	CLEC to CLEC Conversion Charge without outside dispatch			UEA	UREWO		87.72	36.36								
	Loop Tagging - Service Level 2 (SL2)			UEA	URETL		11.19	1.10								
4-WIRE ANALOG VOICE GRADE LOOP																
	4-Wire Analog Voice Grade Loop - Zone 1		1	UEA	UEAL4	17.80	93.01	28.17	19.52	8.12						
	4-Wire Analog Voice Grade Loop - Zone 2		2	UEA	UEAL4	21.68	93.01	28.17	19.52	8.12						
	4-Wire Analog Voice Grade Loop - Zone 3		3	UEA	UEAL4	30.25	93.01	28.17	19.52	8.12						
	Order Coordination for Specified Conversion Time (per LSR)			UEA	OCOSL		57.79									
	CLEC to CLEC Conversion Charge without outside dispatch			UEA	UREWO		87.72	36.36								
2-WIRE ISDN DIGITAL GRADE LOOP																
	2-Wire ISDN Digital Grade Loop - Zone 1		1	UDN	U1L2X	21.89	180.06	35.25	18.23	6.97						
	2-Wire ISDN Digital Grade Loop - Zone 2		2	UDN	U1L2X	25.27	180.06	35.25	18.23	6.97						
	2-Wire ISDN Digital Grade Loop - Zone 3		3	UDN	U1L2X	40.17	180.06	35.25	18.23	6.97						
	Order Coordination For Specified Conversion Time (per LSR)			UDN	OCOSL		57.79									

UNBUNDLED NETWORK ELEMENTS - Georgia														Attachment: 2		Exhibit: A	
CATEGORY		RATE ELEMENTS	Interim	Zone	BCS	USOC	RATES ($)					Svc Order Submitted Elec per LSR	Svc Order Submitted Manually per LSR	Incremental Charge - Manual Svc Order vs. Electronic-1st	Incremental Charge - Manual Svc Order vs. Electronic-Add'l	Incremental Charge - Manual Svc Order vs. Electronic-Disc 1st	Incremental Charge - Manual Svc Order vs. Electronic-Disc Add'l
							Rec	Nonrecurring		Nonrecurring Disconnect		OSS Rates ($)					
								First	Add'l	First	Add'l	SOMEC	SOMAN	SOMAN	SOMAN	SOMAN	SOMAN
		CLEC to CLEC Conversion Charge without outside dispatch			UDN	UREWO		120.98	33.04								
	2-WIRE ASYMMETRICAL DIGITAL SUBSCRIBER LINE (ADSL) COMPATIBLE LOOP																
		2 Wire Unbundled ADSL Loop including manual service inquiry & facility reservation - Zone 1	I	1	UAL	UAL2X	11.23	44.69	31.55	0.00	0.00						
		2 Wire Unbundled ADSL Loop including manual service inquiry & facility reservation - Zone 2	I	2	UAL	UAL2X	12.97	44.69	31.55	0.00	0.00						
		2 Wire Unbundled ADSL Loop including manual service inquiry & facility reservation - Zone 3	I	3	UAL	UAL2X	20.62	44.69	31.55	0.00	0.00						
		Order Coordination for Specified Conversion Time (per LSR)			UAL	OCOSL		57.79									
		2 Wire Unbundled ADSL Loop without manual service inquiry & facility reservaton - Zone 1	I	1	UAL	UAL2W	11.23	44.69	31.55	0.00	0.00						
		2 Wire Unbundled ADSL Loop without manual service inquiry & facility reservaton - Zone 2	I	2	UAL	UAL2W	12.97	44.69	31.55	0.00	0.00						
		2 Wire Unbundled ADSL Loop without manual service inquiry & facility reservaton - Zone 3	I	3	UAL	UAL2W	20.62	44.69	31.55	0.00	0.00						
		Order Coordination for Specified Conversion Time (per LSR)			UAL	OCOSL		57.79									
		CLEC to CLEC Conversion Charge without outside dispatch	I		UAL	UREWO		44.69	29.29								
	2-WIRE HIGH BIT RATE DIGITAL SUBSCRIBER LINE (HDSL) COMPATIBLE LOOP																
		2 Wire Unbundled HDSL Loop including manual service inquiry & facility reservation - Zone 1	I	1	UHL	UHL2X	7.88	44.69	31.55	0.00	0.00						
		2 Wire Unbundled HDSL Loop including manual service inquiry & facility reservation - Zone 2	I	2	UHL	UHL2X	9.09	44.69	31.55	0.00	0.00						
		2 Wire Unbundled HDSL Loop including manual service inquiry & facility reservation - Zone 3	I	3	UHL	UHL2X	14.48	44.69	31.55	0.00	0.00						
		Order Coordination for Specified Conversion Time (per LSR)			UHL	OCOSL		57.79									
		2 Wire Unbundled HDSL Loop without manual service inquiry and facility reservation - Zone 1	I	1	UHL	UHL2W	7.88	44.69	31.55	0.00	0.00						
		2 Wire Unbundled HDSL Loop without manual service inquiry and facility reservation - Zone 2	I	2	UHL	UHL2W	9.09	44.69	31.55	0.00	0.00						
		2 Wire Unbundled HDSL Loop without manual service inquiry and facility reservation - Zone 3	I	3	UHL	UHL2W	14.48	44.69	31.55	0.00	0.00						
		Order Coordination for Specified Conversion Time (per LSR)			UHL	OCOSL		57.79									
		CLEC to CLEC Conversion Charge without outside dispatch	I		UHL	UREWO		44.69	31.55								
	4-WIRE HIGH BIT RATE DIGITAL SUBSCRIBER LINE (HDSL) COMPATIBLE LOOP																
		4 Wire Unbundled HDSL Loop including manual service inquiry and facility reservation - Zone 1	I	1	UHL	UHL4X	10.39	44.69	31.55	0.00	0.00						
		4-Wire Unbundled HDSL Loop including manual service inquiry and facility reservation - Zone 2	I	2	UHL	UHL4X	12.00	44.69	31.55	0.00	0.00						
		4-Wire Unbundled HDSL Loop including manual service inquiry and facility reservation - Zone 3	I	3	UHL	UHL4X	19.07	44.69	31.55	0.00	0.00						
		Order Coordination for Specified Conversion Time (per LSR)			UHL	OCOSL		57.79									
		4-Wire Unbundled HDSL Loop without manual service inquiry and facility reservation - Zone 1	I	1	UHL	UHL4W	10.39	44.69	31.55	0.00	0.00						
		4-Wire Unbundled HDSL Loop without manual service inquiry and facility reservation - Zone 2	I	2	UHL	UHL4W	12.00	44.69	31.55	0.00	0.00						
		4-Wire Unbundled HDSL Loop without manual service inquiry and facility reservation - Zone 3	I	3	UHL	UHL4W	19.07	44.69	31.55	0.00	0.00						
		Order Coordination for Specified Conversion Time (per LSR)			UHL	OCOSL		57.79									
		CLEC to CLEC Conversion Charge without outside dispatch	I		UHL	UREWO		44.69	31.55								
	4-WIRE DS1 DIGITAL LOOP																
		4-Wire DS1 Digital Loop - Zone 1		1	USL	USLXX	41.02	211.93	72.49	38.24	7.20						
		4-Wire DS1 Digital Loop - Zone 2		2	USL	USLXX	46.41	211.93	72.49	38.24	7.20						
		4-Wire DS1 Digital Loop - Zone 3		3	USL	USLXX	62.03	211.93	72.49	38.24	7.20						
		Order Coordination for Specified Conversion Time (per LSR)			USL	OCOSL		57.79									
		CLEC to CLEC Conversion Charge without outside dispatch			USL	UREWO		100.91	42.97								
	4-WIRE 19.2, 56 OR 64 KBPS DIGITAL GRADE LOOP																
		4 Wire Unbundled Digital 19.2 Kbps		1	UDL	UDL19	21.86	196.66	37.00	18.82	7.20						
		4 Wire Unbundled Digital 19.2 Kbps		2	UDL	UDL19	28.36	196.66	37.00	18.82	7.20						
		4 Wire Unbundled Digital 19.2 Kbps		3	UDL	UDL19	38.22	196.66	37.00	18.82	7.20						

UNBUNDLED NETWORK ELEMENTS - Georgia														Attachment: 2		Exhibit: A	
CATEGORY		RATE ELEMENTS	Interim	Zone	BCS	USOC	RATES ($)					Svc Order Submitted Elec per LSR	Svc Order Submitted Manually per LSR	Incremental Charge - Manual Svc Order vs. Electronic-1st	Incremental Charge - Manual Svc Order vs. Electronic-Add'l	Incremental Charge - Manual Svc Order vs. Electronic-Disc 1st	Incremental Charge - Manual Svc Order vs. Electronic-Disc Add'l
							Rec	Nonrecurring		Nonrecurring Disconnect		OSS Rates ($)					
								First	Add'l	First	Add'l	SOMEC	SOMAN	SOMAN	SOMAN	SOMAN	SOMAN
		4 Wire Unbundled Digital Loop 56 Kbps - Zone 1		1	UDL	UDL56	21.86	196.66	37.00	18.82	7.20						
		4 Wire Unbundled Digital Loop 56 Kbps - Zone 2		2	UDL	UDL56	28.36	196.66	37.00	18.82	7.20						
		4 Wire Unbundled Digital Loop 56 Kbps - Zone 3		3	UDL	UDL56	38.22	196.66	37.00	18.82	7.20						
		Order Coordination for Specified Conversion Time (per LSR)			UDL	OCOSL		57.79									
		4 Wire Unbundled Digital Loop 64 Kbps - Zone 1		1	UDL	UDL64	21.86	196.66	37.00	18.82	7.20						
		4 Wire Unbundled Digital Loop 64 Kbps - Zone 2		2	UDL	UDL64	28.36	196.66	37.00	18.82	7.20						
		4 Wire Unbundled Digital Loop 64 Kbps - Zone 3		3	UDL	UDL64	38.22	196.66	37.00	18.82	7.20						
		Order Coordination for Specified Conversion Time (per LSR)			UDL	OCOSL		57.79									
		CLEC to CLEC Conversion Charge without outside dispatc h			UDL	UREWO		101.95	49.66								
	2-WIRE Unbundled COPPER LOOP																
		2-Wire Unbundled Copper Loop-Designed including manual service inquiry & facility reservation - Zone 1	I	1	UCL	UCLPB	12.02	44.69	31.55	0.00	0.00						
		2-Wire Unbundled Copper Loop-Designed including manual service inquiry & facility reservation - Zone 2	I	2	UCL	UCLPB	13.88	44.69	31.55	0.00	0.00						
		2 Wire Unbundled Copper Loop-Designed including manual service inquiry & facility reservation - Zone 3	I	3	UCL	UCLPB	22.07	44.69	31.55	0.00	0.00						
		Order Coordination for Unbundled Copper Loops (per loop)			UCL	UCLMC		18.92	18.92								
		2-Wire Unbundled Copper Loop-Designed without manual service inquiry and facility reservation - Zone 1	I	1	UCL	UCLPW	12.02	44.69	31.55	0.00	0.00						
		2-Wire Unbundled Copper Loop-Designed without manual service inquiry and facility reservation - Zone 2	I	2	UCL	UCLPW	13.88	44.69	31.55	0.00	0.00						
		2-Wire Unbundled Copper Loop-Designed without manual service inquiry and facility reservation - Zone 3	I	3	UCL	UCLPW	22.07	44.69	31.55	0.00	0.00						
		Order Coordination for Unbundled Copper Loops (per loop)			UCL	UCLMC		18.92	18.92								
		Order Coordination for Unbundled Copper Loops (per loop)			UCL	UCLMC		18.92	18.92								
		CLEC to CLEC Conversion Charge without outside dispatch (UCL-Des)	I		UCL	UREWO		44.69	31.55								
	4-WIRE COPPER LOOP																
		4-Wire Copper Loop-Designed including manual service inquiry and facility reservation - Zone 1	I	1	UCL	UCL4S	16.65	44.69	31.55	0.00	0.00						
		4-Wire Copper Loop-Designed including manual service inquiry and facility reservation - Zone 2	I	2	UCL	UCL4S	19.22	44.69	31.55	0.00	0.00						
		4-Wire Copper Loop-Designed including manual service inquiry and facility reservation - Zone 3	I	3	UCL	UCL4S	30.55	44.69	31.55	0.00	0.00						
		Order Coordination for Unbundled Copper Loops (per loop)			UCL	UCLMC		18.92	18.92								
		4-Wire Copper Loop-Designed without manual service inquiry and facility reservation - Zone 1	I	1	UCL	UCL4W	16.65	44.69	31.55	0.00	0.00						
		4-Wire Copper Loop-Designed without manual service inquiry and facility reservation - Zone 2	I	2	UCL	UCL4W	19.22	44.69	31.55	0.00	0.00						
		4-Wire Copper Loop-Designed without manual service inquiry and facility reservation - Zone 3	I	3	UCL	UCL4W	30.55	44.69	31.55	0.00	0.00						
		Order Coordination for Unbundled Copper Loops (per loop)			UCL	UCLMC		18.92	18.92								
		CLEC to CLEC conversion Charge without outside dispatch	I		UCL	UREWO		44.69	31.55								
LOOP MODIFICATION																	
		Unbundled Loop Modification, Removal of Load Coils - 2 Wire pair less than or equal to 18k ft, per Unbundled Loop	I		UAL, UHL, UCL, UEQ, ULS, UEA, UEANL, UEPSR, UEPSB	ULM2L		0.00	0.00								
		Unbundled Loop Modification Removal of Load Coils - 4 Wire less than or equal to 18K ft, per Unbundled Loop	I		UHL, UCL, UEA	ULM4L		0.00	0.00								
		Unbundled Loop Modification Removal of Bridged Tap Removal, per Unbundled Loop			UAL, UHL, UCL, UEQ, ULS, UEA, UEANL, UEPSR, UEPSB	ULMBT		17.91									
SUB-LOOPS																	
	Sub-Loop Distribution																
		Sub-Loop - Per Cross Box Location - CLEC Feeder Facility Set-Up			UEANL	USBSA		255.76									

UNBUNDLED NETWORK ELEMENTS - Georgia														Attachment: 2		Exhibit: A	
CATEGORY	RATE ELEMENTS	Interim	Zone	BCS	USOC	RATES ($)					Svc Order Submitted Elec per LSR	Svc Order Submitted Manually per LSR	Incremental Charge - Manual Svc Order vs. Electronic-1st	Incremental Charge - Manual Svc Order vs. Electronic-Add'l	Incremental Charge - Manual Svc Order vs. Electronic-Disc 1st	Incremental Charge - Manual Svc Order vs. Electronic-Disc Add'l
						Rec	Nonrecurring		Nonrecurring Disconnect		OSS Rates ($)					
							First	Add'l	First	Add'l	SOMEC	SOMAN	SOMAN	SOMAN	SOMAN	SOMAN
	Sub-Loop - Per Cross Box Location - Per 25 Pair Panel Set-Up			UEANL	USBSB		7.29									
	Sub-Loop - Per Building Equipment Room - CLEC Feeder Facility Set-Up			UEANL	USBSC		175.09									
	Sub-Loop - Per Building Equipment Room - Per 25 Pair Panel Set-Up			UEANL	USBSD		51.61									
	Unbundled Sub-Loops, Riser Cable, 2-Wire per Loop, Working and Spare Loop Activation			UEANL	USBRC	3.61	28.46	3.85	2.20	0.01						
	Unbundled Sub-Loops, Riser Cable, 4-Wire per Loop, Working and Spare Loop Activation			UEANL	USBRD	7.67	31.07	4.79	2.27	0.01						
	Sub-Loop Distribution Per 2-Wire Analog Voice Grade Loop - Zone 1		1	UEANL	USBN2	6.52	28.46	3.85	2.20	0.01						
	Sub-Loop Distribution Per 2-Wire Analog Voice Grade Loop - Zone 2		2	UEANL	USBN2	10.18	28.46	3.85	2.20	0.01						
	Sub-Loop Distribution Per 2-Wire Analog Voice Grade Loop - Zone 3		3	UEANL	USBN2	19.51	28.46	3.85	2.20	0.01						
	Sub-Loop Distribution Per 4-Wire Analog Voice Grade Loop - Zone 1		1	UEANL	USBN4	5.93	31.07	4.79	2.27	0.01						
	Sub-Loop Distribution Per 4-Wire Analog Voice Grade Loop - Zone 2		2	UEANL	USBN4	9.71	31.07	4.79	2.27	0.01						
	Sub-Loop Distribution Per 4-Wire Analog Voice Grade Loop - Zone 3		3	UEANL	USBN4	18.85	31.07	4.79	2.27	0.01						
	Order Coordination for Unbundled Sub-Loops, per sub-loop pair			UEANL	USBMC		18.92	18.92								
	Sub-Loop 2-Wire Intrabuilding Network Cable (INC)			UEANL	USBR2	3.61	28.46	3.85	2.20	0.01						
	Order Coordination for Unbundled Sub-Loops, per sub-loop pair			UEANL	USBMC		18.92	18.92								
	Sub-Loop 4-Wire Intrabuilding Network Cable (INC)	I		UEANL	USBR4	7.67	31.07	4.79	2.27	0.01						
	Order Coordination for Unbundled Sub-Loops, per sub-loop pair			UEANL	USBMC		18.92	18.92								
	Loop Testing - Basic 1st Half Hour			UEANL	URET1		25.12	25.12								
	Loop Testing - Basic Additional Half Hour			UEANL	URETA		13.62	13.62								
	2 Wire Copper Unbundled Sub-Loop Distribution - Zone 1	I	1	UEF	UCS2X	5.94	28.46	3.85	2.20	0.01						
	2 Wire Copper Unbundled Sub-Loop Distribution - Zone 2	I	2	UEF	UCS2X	7.51	28.46	3.85	2.20	0.01						
	2 Wire Copper Unbundled Sub-Loop Distribution - Zone 3	I	3	UEF	UCS2X	9.22	28.46	3.85	2.20	0.01						
	Order Coordination for Unbundled Sub-Loops, per sub-loop pair			UEF	USBMC		18.92	18.92								
	4 Wire Copper Unbundled Sub-Loop Distribution - Zone 1	I	1	UEF	UCS4X	6.37	31.07	4.79	2.27	0.01						
	4 Wire Copper Unbundled Sub-Loop Distribution - Zone 2	I	2	UEF	UCS4X	6.32	31.07	4.79	2.27	0.01						
	4 Wire Copper Unbundled Sub-Loop Distribution - Zone 3	I	3	UEF	UCS4X	9.10	31.07	4.79	2.27	0.01						
	Order Coordination for Unbundled Sub-Loops, per sub-loop pair			UEF	USBMC		18.92	18.92								
	Loop Testing - Basic 1st Half Hour			UEF	URET1		25.12	25.12								
	Loop Testing - Basic Additional Half Hour			UEF	URETA		13.62	13.62								
	Unbundled Network Terminating Wire (UNTW)															
	Unbundled Network Terminating Wire (UNTW) per Pair			UENTW	UENPP	0.533	25.12	12.28								
	Network Interface Device (NID)															
	Network Interface Device (NID) - 1-2 lines	I		UENTW	UND12		32.86	20.69								
	Network Interface Device (NID) - 1-6 lines	I		UENTW	UND16		56.03	43.86								
	Network Interface Device Cross Connect - 2 W	I		UENTW	UNDC2		2.45	2.45								
	Network Interface Device Cross Connect - 4W			UENTW	UNDC4		2.45	2.45								
UNE OTHER, PROVISIONING ONLY - NO RATE																
	NID - Dispatch and Service Order for NID installation			UENTW	UNDBX	0.00	0.00									
	UNTW Circuit Id Establishment, Provisioning Only - No Rate			UENTW	UENCE	0.00	0.00									
	Unbundled Contract Name, Provisioning Only - No Rate			UEANL,UEF,UEQ,UENTW	UNECN	0.00	0.00									
UNE OTHER, PROVISIONING ONLY - NO RATE																

UNBUNDLED NETWORK ELEMENTS - Georgia														Attachment: 2		Exhibit: A	
CATEGORY		RATE ELEMENTS	Interim	Zone	BCS	USOC	RATES ($)					Svc Order Submitted Elec per LSR	Svc Order Submitted Manually per LSR	Incremental Charge - Manual Svc Order vs. Electronic-1st	Incremental Charge - Manual Svc Order vs. Electronic-Add'l	Incremental Charge - Manual Svc Order vs. Electronic-Disc 1st	Incremental Charge - Manual Svc Order vs. Electronic-Disc Add'l
							Rec	Nonrecurring		Nonrecurring Disconnect		OSS Rates ($)					
								First	Add'l	First	Add'l	SOMEC	SOMAN	SOMAN	SOMAN	SOMAN	SOMAN
		Unbundled Contact Name, Provisioning Only - no rate			UAL,UCL,UDC,UDL, UDN,UEA,UHL,ULC	UNECN	0.00	0.00									
		Unbundled Sub-Loop Feeder-2 Wire Cross Box Jumper - no rate			UEA,UDN,UCL,UDC	USBFQ	0.00	0.00									
		Unbundled Sub-Loop Feeder-4 Wire Cross Box Jumper - no rate			UEA,USL,UCL,UDL	USBFR	0.00	0.00									
		Unbundled DS1 Loop - Superframe Format Option - no rate			USL	CCOSF	0.00	0.00									
		Unbundled DS1 Loop - Expanded Superframe Format option - no rate			USL	CCOEF	0.00	0.00									
HIGH CAPACITY UNBUNDLED LOCAL LOOP																	
		High Capacity Unbundled Local Loop - DS3 - Per Mile per month			UE3	1L5ND	10.97										
		High Capacity Unbundled Local Loop - DS3 - Facility Termination per month			UE3	UE3PX	253.38	1,753.23	131.90	112.91	75.88						
		High Capacity Unbundled Local Loop - STS-1 - Per Mile per month			UDLSX	1L5ND	10.97										
		High Capacity Unbundled Local Loop - STS-1 - Facility Termination per month			UDLSX	UDLS1	305.42	1,753.23	131.90	112.91	75.88						
LOOP MAKE-UP																	
		Loop Makeup - Preordering Without Reservation, per working or spare facility queried (Manual).			UMK	UMKLW		15.19	15.19								
		Loop Makeup - Preordering With Reservation, per spare facility queried (Manual).			UMK	UMKLP		19.85	19.85								
		Loop Makeup--With or Without Reservation, per working or spare facility queried (Mechanized)			UMK	UMKMQ		0.82	0.82								
LINE SHARING AND LINE SPLITTING																	
		NOTE 1: The Line Sharing monthly recurring rates for all installations completed from October 02, 2003 through midnight October 01, 2004 shall be billed as follows:															
		NOTE 1: 10/02/2003 – 10/01/2004: 25% of the rate for an unbundled copper loop non-designed ("UCLND")															
		NOTE 1: 10/02/2004 – 10/01/2005: 50% of the rate for UCLND															
		NOTE 1: 10/02/2005 – 10/01/2006: 75% of the rate for UCLND															
		NOTE 1: Above will apply to USOCS: ULSDT and ULSCT															
		****NOTE 2: The Line Sharing monthly recurring rates with USOCs ULSDC and ULSCC applies only to circuits installed and inservice on or before October 1, 2003**															
		LINE SHARING															
		SPLITTERS-CENTRAL OFFICE BASED															
		Line Sharing Splitter, per System 96 Line Capacity			ULS	ULSDA	131.00	0.00	0.00	0.00	0.00						
		Line Sharing Splitter, per System 24 Line Capacity			ULS	ULSDB	32.00	0.00	0.00	0.00	0.00						
		Line Sharing Splitter, Per System, 8 Line Capacity			ULS	ULSD8	11.00	0.00	0.00	0.00	0.00						
		Line Sharing-DLEC Owned Splitter in CO-CFA activaton-deactivation (per LSOD)			ULS	ULSDG		66.34	0.00	51.20	0.00						
		END USER ORDERING-CENTRAL OFFICE BASED LINE SHARING															
		Line Sharing - per Line Activation (BST Owned splitter) - OBSOLETE see **NOTE 2			ULS	ULSDC	0.61	10.51	7.70	7.00	4.20						
		Line Share Service, TRO per line activation, BST owned splitter - Central Office Located (25% of UCLND) - please see NOTE 1 (E:10/2/2003)			ULS	ULSDT	2.76	10.51	7.70	7.00	4.20						
		Line Share Service, TRO per line activation, BST owned splitter - Central Office Located (50% of UCLND) - please see NOTE 1 (E:10/2/2004)			ULS	ULSDT	5.51	10.51	7.70	7.00	4.20						
		Line Share Service, TRO per line activation, BST owned splitter - Central Office Located (75% of UCLND) - please see NOTE 1 (E:10/2/2005)			ULS	ULSDT	8.27	10.51	7.70	7.00	4.20						
		Line Sharing - per Subsequent Activity per Line Rearrangement(BST Owned Splitter			ULS	ULSDS		36.23	13.23	16.94	1.69						
		Line Sharing - per Subsequent Activity per Line Rearrangement(DLEC Owned Splitter			ULS	ULSCS		36.23	13.23	16.94	1.69						
		Line Sharing - per Line Activation (DLEC owned Splitter) - OBSOLETE see **NOTE 2			ULS	ULSCC	0.61	17.82	9.36	8.53	4.30						

UNBUNDLED NETWORK ELEMENTS - Georgia														Attachment: 2		Exhibit: A	
CATEGORY		RATE ELEMENTS	Interim	Zone	BCS	USOC	RATES ($)					Svc Order Submitted Elec per LSR	Svc Order Submitted Manually per LSR	Incremental Charge - Manual Svc Order vs. Electronic-1st	Incremental Charge - Manual Svc Order vs. Electronic-Add'l	Incremental Charge - Manual Svc Order vs. Electronic-Disc 1st	Incremental Charge - Manual Svc Order vs. Electronic-Disc Add'l
							Rec	Nonrecurring		Nonrecurring Disconnect		OSS Rates ($)					
								First	Add'l	First	Add'l	SOMEC	SOMAN	SOMAN	SOMAN	SOMAN	SOMAN
		Line Share Service, TRO per line activation, CLEC owned splitter - Central Office Located (25% of UCLND) - please see NOTE 1 (E:10/2/2003)			ULS	ULSCT	2.76	17.82	9.36	8.53	4.30						
		Line Share Service, TRO per line activation, CLEC owned splitter - Central Office Located (50% of UCLND) - please see NOTE 1 (E:10/2/2004)			ULS	ULSCT	5.51	17.82	9.36	8.53	4.30						
		Line Share Service, TRO per line activation, CLEC owned splitter - Central Office Located (75% of UCLND) - please see NOTE 1 (E:10/2/2005)			ULS	ULSCT	8.27	17.82	9.36	8.53	4.30						
	LINE SPLITTING																
	END USER ORDERING-CENTRAL OFFICE BASED																
		Line Splitting - per line activation DLEC owned splitter			UEPSR UEPSB	UREOS	0.61										
		Line Splitting - per line activation BST owned - physical			UEPSR UEPSB	UREBP	0.6297	20.10	12.40	7.68	4.30						
		Line Splitting - per line activation BST owned - virtual			UEPSR UEPSB	UREBV	0.6288	20.10	12.40	7.68	4.30						
	MAINTENANCE																
		No Trouble Found - per 1/2 hour increments - Basic						80.00	55.00								
		No Trouble Found - per 1/2 hour increments - Overtime						120.00	82.50								
		No Trouble Found - per 1/2 hour increments - Premium						160.00	110.00								
UNBUNDLED DEDICATED TRANSPORT																	
	INTEROFFICE CHANNEL - DEDICATED TRANSPORT																
		Interoffice Channel - Dedicated Transport - 2-Wire Voice Grade - Per Mile per month			U1TVX	1L5XX	0.0057										
		Interoffice Channel - Dedicated Transport- 2- Wire Voice Grade - Facility Termination			U1TVX	U1TV2	12.87	48.46	19.48	16.58	5.00						
		Interoffice Channel - Dedicated Transpor t- 2-Wire Voice Grade Rev Bat. - Per Mile per month			U1TVX	1L5XX	0.0057										
		Interoffice Channel - Dedicated Transport- 2- Wire VG Rev Bat. - Facility Termination			U1TVX	U1TR2	12.87	48.46	19.48	16.58	5.00						
		Interoffice Channel - Dedicated Transport - 4-Wire Voice Grade - Per Mile per month			U1TVX	1L5XX	0.0057										
		Interoffice Channel - Dedicated Transport - 4- Wire Voice Grade - Facility Termination			U1TVX	U1TV4	10.78	48.46	19.48	16.58	5.00						
		Interoffice Channel - Dedicated Transport - 56 kbps - per mile per month			U1TDX	1L5XX	0.0057										
		Interoffice Channel - Dedicated Transport - 56 kbps - Facility Termination			U1TDX	U1TD5	7.83	48.46	19.48	16.58	5.00						
		Interoffice Channel - Dedicated Transport - 64 kbps - per mile per month			U1TDX	1L5XX	0.0057										
		Interoffice Channel - Dedicated Transport - 64 kbps - Facility Termination			U1TDX	U1TD6	7.83	48.46	19.48	16.58	5.00						
		Interoffice Channel - Dedicated Channel - DS1 - Per Mile per month			U1TD1	1L5XX	0.1154										
		Interoffice Channel - Dedicated Tranport - DS1 - Facility Termination			U1TD1	U1TF1	34.19	111.03	80.28	31.36	21.73						
		Interoffice Channel - Dedicated Transport - DS3 - Per Mile per month			U1TD3	1L5XX	2.53										
		Interoffice Channel - Dedicated Transport - DS3 - Facility Termination per month			U1TD3	U1TF3	342.02	320.47	86.32	66.77	52.81						
		Interoffice Channel - Dedicated Transport - STS-1 - Per Mile per month			U1TS1	1L5XX	2.53										
		Interoffice Channel - Dedicated Transport - STS-1 - Facility Termination			U1TS1	U1TFS	358.67	320.47	86.32	66.77	52.81						
DARK FIBER																	
		Dark Fiber, Four Fiber Strands, Per Route Mile or Fraction Thereof per month - Interoffice Channel			UDF, UDFCX	1L5DF	23.29										
		NRC Dark Fiber - Interoffice Channel			UDF, UDFCX	UDF14		1,776.53	89.75	73.64	18.70						
		Dark Fiber, Four Fiber Strands, Per Route Mile or Fraction Thereof per month - Local Loop			UDF, UDFCX	1L5DL	46.84										
		NRC Dark Fiber - Local Loop			UDF, UDFCX	UDFL4		1,745.99	87.54	73.64	18.70						

UNBUNDLED NETWORK ELEMENTS - Georgia														Attachment: 2		Exhibit: A	
CATEGORY		RATE ELEMENTS	Interim	Zone	BCS	USOC	RATES ($)					Svc Order Submitted Elec per LSR	Svc Order Submitted Manually per LSR	Incremental Charge - Manual Svc Order vs. Electronic-1st	Incremental Charge - Manual Svc Order vs. Electronic-Add'l	Incremental Charge - Manual Svc Order vs. Electronic-Disc 1st	Incremental Charge - Manual Svc Order vs. Electronic-Disc Add'l
							Rec	Nonrecurring		Nonrecurring Disconnect		OSS Rates ($)					
								First	Add'l	First	Add'l	SOMEC	SOMAN	SOMAN	SOMAN	SOMAN	SOMAN
8XX ACCESS TEN DIGIT SCREENING																	
		8XX Access Ten Digit Screening, Per Call			OHD		0.0008543										
		8XX Access Ten Digit Screening, Reservation Charge Per 8XX Number Reserved			OHD	N8R1X		2.50	0.43								
		8XX Access Ten Digit Screening, Per 8XX No. Established W/O POTS Translations			OHD			5.65	0.76	4.24	0.51						
		8XX Access Ten Digit Screening, Per 8XX No. Established With POTS Translations			OHD	N8FTX		5.65	0.76	4.24	0.51						
		8XX Access Ten Digit Screening, Customized Area of Service Per 8XX Number			OHD	N8FCX		2.50	1.25								
		8XX Access Ten Digit Screening, Multiple InterLATA CXR Routing Per CXR Requested Per 8XX No.			OHD	N8FMX		2.93	1.68								
		8XX Access Ten Digit Screening, Change Charge Per Request			OHD	N8FAX		2.93	0.43								
		8XX Access Ten Digit Screening, Call Handling and Destination Features			OHD	N8FDX		2.50									
		8XX Access Ten Digit Screening, w/8FL No. Delivery			OHD		0.0008543										
		8XX Access Ten Digit Screening, w/POTS No. Delivery			OHD		0.0008543										
LINE INFORMATION DATA BASE ACCESS (LIDB)																	
		LIDB Common Transport Per Query			OQT		0.0000682										
		LIDB Validation Per Query			OQU		0.0266962										
		LIDB Originating Point Code Establishment or Change			OQT, OQU	NRBPX		33.24	33.24	39.35	39.35						
SIGNALING (CCS7)																	
		CCS7 Signaling Connection, Per 56Kbps Facility			UDB	TPP++	8.73	34.77	34.77	16.91	16.91						
		CCS7 Signaling Termination, Per STP Port			UDB	PT8SX	108.80										
		CCS7 Signaling Usage, Per Call Setup Message			UDB		0.0000132										
		CCS7 Signaling Usage, Per TCAP Message			UDB		0.0000527										
		CCS7 Signaling Connection, Per link (A link) (same as E.3.1)			UDB	TPP++	8.73	34.77	34.77	16.91	16.91						
		CCS7 Signaling Connection, Per link (B link) (also known as D link) (same as E.3.1)			UDB	TPP++	8.73	34.77	34.77	16.91	16.91						
		CCS7 Signaling Usage, Per ISUP Message (same as E.3.3)			UDB		0.0000132										
		CCS7 Signaling Usage Surrogate, per link			UDB	STU56	907.44										
		CCS7 Signaling Point Code, Establishment or Change, per STP affected			UDB	CCAPO		28.15	28.15	33.32	33.32						
E911 SERVICE																	
		Local Channel - Dedicated - 2-wr Voice Grade					7.74	121.07	53.30	46.40	13.37						
		Interoffice Transport - Dedicated - 2-wr Voice Grade Per Mile					0.0057										
		Interoffice Transport - Dedicated - 2-wr Voice Grade Per Facility Termination					12.87	48.46	19.48	16.58	5.00						
		Local Channel - Dedicated - DS1 - Zone 1					18.47	149.46	111.20	40.36	26.12						
		Local Channel - Dedicated - DS1 - Zone 2					56.30	149.46	111.20	40.36	26.12						
		Local Channel - Dedicated - DS1 - Zone 3					164.70	149.46	111.20	40.36	26.12						
		Interoffice Transport - Dedicated - DS1 Per Mile					0.1154										
		Interoffice Transport - Dedicated - DS1 Per Facility Termination					34.19	111.03	80.28	31.36	21.73						
CALLING NAME (CNAM) SERVICE																	
		CNAM For DB Owners - Service Establishment			OQV			22.90		20.32							
		CNAM For Non DB Owners - Service Establishment			OQV			22.90		20.32							
		CNAM For DB Owners - Service Provisioning With Point Code Establishment			OQV			959.77	709.83	251.47	184.91						
		CNAM For Non DB Owners - Service Provisioning With Point Code Establishment			OQV			331.89	237.45	257.65	184.91						
		CNAM for DB Owners, Per Query			OQV		0.0009924										
		CNAM for Non DB Owners, Per Query			OQV		0.0009924										
		CNAM (Non-Databs Owner), NRC, applies when using the Character Based User Interface (CHUI)			OQV	CDDCH		595.00	595.00								
SELECTIVE ROUTING																	
		Selective Routing Per Unique Line Class Code Per Request Per Switch						102.19	61.15	12.68	6.34						
VIRTUAL COLLOCATION																	

UNBUNDLED NETWORK ELEMENTS - Georgia														Attachment: 2		Exhibit: A	
CATEGORY		RATE ELEMENTS	Interim	Zone	BCS	USOC	RATES ($)					Svc Order Submitted Elec per LSR	Svc Order Submitted Manually per LSR	Incremental Charge - Manual Svc Order vs. Electronic-1st	Incremental Charge - Manual Svc Order vs. Electronic-Add'l	Incremental Charge - Manual Svc Order vs. Electronic-Disc 1st	Incremental Charge - Manual Svc Order vs. Electronic-Disc Add'l
							Rec	Nonrecurring		Nonrecurring Disconnect		OSS Rates ($)					
								First	Add'l	First	Add'l	SOMEC	SOMAN	SOMAN	SOMAN	SOMAN	SOMAN
		Virtual Collocation-2 Wire Cross Connects (Loop) for Line Splitting			UEPSR UEPSB	VE1LS	0.0188	0.00	0.00	0.00	0.00						
PHYSICAL COLLOCATION																	
		Physical Collocation-2 Wire Cross Connects (Loop) for Line Splitting			UEPSR UEPSB	PE1LS	0.0197	0.00	0.00								
AIN SELECTIVE CARRIER ROUTING																	
		Regional Service Establishment			SRC	SRCEC		101,311.67	101,311.67	7,833.25	7,833.25						
		End Office Establishment			SRC	SRCEO		158.92	158.92	1.64	1.64						
		Line/Port NRC, per end user			SRC	SRCLP		2.06	2.06								
		Query NRC, per query			SRC		0.0020368										
AIN - BELLSOUTH AIN SMS ACCESS SERVICE																	
		AIN SMS Access Service - Service Establishment, Per State, Initial Setup			A1N	CAMSE		41.41	41.41	41.63	41.63						
		AIN SMS Access Service - Port Connection - Dial/Shared Access			A1N	CAMDP		8.15	8.15	9.16	9.16						
		AIN SMS Access Service - Port Connection - ISDN Access			A1N	CAM1P		8.15	8.15	9.16	9.16						
		AIN SMS Access Service - User Identification Codes - Per User ID Code			A1N	CAMAU		35.29	35.29	26.50	26.50						
		AIN SMS Access Service - Security Card, Per User ID Code, Initial or Replacement			A1N	CAMRC		40.24	40.24	11.72	11.72						
		AIN SMS Access Service - Storage, Per Unit (100 Kilobytes)					0.0038										
		AIN SMS Access Service - Session, Per Minute					1.81										
		AIN SMS Access Service - Company Performed Session, Per Minute					0.8323										
AIN - BELLSOUTH AIN TOOLKIT SERVICE																	
		AIN Toolkit Service - Service Establishment Charge, Per State, Initial Setup			CAM	BAPSC		41.41	41.41	41.63	41.63						
		AIN Toolkit Service - Training Session, Per Customer				BAPVX		4,236.62	4,236.62								
		AIN Toolkit Service - Trigger Access Charge, Per Trigger, Per DN, Term. Attempt				BAPTT		8.15	8.15	9.16	9.16						
		AIN Toolkit Service - Trigger Access Charge, Per Trigger, Per DN, Off-Hook Delay				BAPTD		8.15	8.15	9.16	9.16						
		AIN Toolkit Service - Trigger Access Charge, Per Trigger, Per DN, Off-Hook Immediate				BAPTM		8.15	8.15	9.16	9.16						
		AIN Toolkit Service - Trigger Access Charge, Per Trigger, Per DN, 10-Digit PODP				BAPTO		33.98	33.98	14.09	14.09						
		AIN Toolkit Service - Trigger Access Charge, Per Trigger, Per DN, CDP				BAPTC		33.98	33.98	14.09	14.09						
		AIN Toolkit Service - Trigger Access Charge, Per Trigger, Per DN, Feature Code				BAPTF		33.98	33.98	14.09	14.09						
		AIN Toolkit Service - Query Charge, Per Query					0.0271438										
		AIN Toolkit Service - Type 1 Node Charge, Per AIN Toolkit Subscription, Per Node, Per Query					0.0059195										
		AIN Toolkit Service - SCP Storage Charge, Per SMS Access Account, Per 100 Kilobytes					0.04										
		AIN Toolkit Service - Monthly report - Per AIN Toolkit Service Subscription			CAM	BAPMS	14.78	8.15	8.15	5.71	5.71						
		AIN Toolkit Service - Special Study - Per AIN Toolkit Service Subscription			CAM	BAPLS	6.46	8.98	8.98								
		AIN Toolkit Service - Call Event Report - Per AIN Toolkit Service Subscription			CAM	BAPDS	8.54	8.15	8.15	5.71	5.71						
		AIN Toolkit Service - Call Event Special Study - Per AIN Toolkit Service Subscription			CAM	BAPES	0.22	8.98	8.98								
ENHANCED EXTENDED LINK (EELs)																	
	NOTE: The monthly recurring and non-recurring charges below will apply and the Switch-As-Is Charge will not apply for UNE combinations provisioned as ' Ordinarily Combined' Network Elements.																
	NOTE: The monthly recurring and the Switch-As-Is Charge and not the non-recurring charges below will apply for UNE combinations provisioned as ' Currently Combined' Network Elements.																
	EXTENTED 2-WIRE VOICE GRADE EXTENDED LOOP WITH DEDICATED DS1 INTEROFFICE TRANSPORT																
		First 2-Wire VG Loop (SL2) in Combination - Zone 1		1	UNCVX	UEAL2	11.57	195.94	36.38	18.42	6.86						
		First 2-Wire VG Loop (SL2) in Combination - Zone 2		2	UNCVX	UEAL2	16.95	195.94	36.38	18.42	6.86						

UNBUNDLED NETWORK ELEMENTS - Georgia														Attachment: 2		Exhibit: A	
CATEGORY		RATE ELEMENTS	Interim	Zone	BCS	USOC	RATES ($)					Svc Order Submitted Elec per LSR	Svc Order Submitted Manually per LSR	Incremental Charge - Manual Svc Order vs. Electronic-1st	Incremental Charge - Manual Svc Order vs. Electronic-Add'l	Incremental Charge - Manual Svc Order vs. Electronic-Disc 1st	Incremental Charge - Manual Svc Order vs. Electronic-Disc Add'l
							Rec	Nonrecurring		Nonrecurring Disconnect		OSS Rates ($)					
								First	Add'l	First	Add'l	SOMEC	SOMAN	SOMAN	SOMAN	SOMAN	SOMAN
		First 2-Wire VG Loop (SL2) in Combination - Zone 3		3	UNCVX	UEAL2	33.08	195.94	36.38	18.42	6.86						
		Interoffice Transport - Dedicated - DS1 combination - Per Mile per month			UNC1X	1L5XX	0.1154										
		Interoffice Transport - Dedicated - DS1 combination - Facility Termination per month			UNC1X	U1TF1	34.19	87.76	45.73	43.80	27.97						
		1/0 Channelization System in combination Per Month			UNC1X	MQ1	69.75	86.10									
		Voice Grade COCI - Per Month			UNCVX	1D1VG	0.4689	27.33	2.90	16.86	1.04						
		Each Additional 2-Wire VG Loop (SL 2) in Combination - Zone 1		1	UNCVX	UEAL2	11.57	195.94	36.38	18.42	6.86						
		Each Additional 2-Wire VG Loop (SL 2) in Combination - Zone 2		2	UNCVX	UEAL2	16.95	195.94	36.38	18.42	6.86						
		Each Additional 2-Wire VG Loop (SL 2) in Combination - Zone 3		3	UNCVX	UEAL2	33.08	195.94	36.38	18.42	6.86						
		Voice Grade COCI - Per Month			UNCVX	1D1VG	0.4689	27.33	2.90	16.86	1.04						
		Nonrecurring Currently Combined Network Elements Switch -As-Is Charge			UNC1X	UNCCC		5.70	5.70	6.61	6.61						
	EXTENDED 4-WIRE VOICE GRADE EXTENDED LOOP WITH DEDICATED DS1 INTEROFFICE TRANSPORT																
		First 4-Wire Analog Voice Grade Loop in Combination - Zone 1		1	UNCVX	UEAL4	17.80	195.94	36.38	18.42	6.86						
		First 4-Wire Analog Voice Grade Loop in Combination - Zone 2		2	UNCVX	UEAL4	21.68	195.94	36.38	18.42	6.86						
		First 4-Wire Analog Voice Grade Loop in Combination - Zone 3		3	UNCVX	UEAL4	30.25	195.94	36.38	18.42	6.86						
		Interoffice Transport - Dedicated - DS1 combination - Per Mile Per Month			UNC1X	1L5XX	0.1154										
		Interoffice Transport - Dedicated - DS1 - Facility Termination Per Month			UNC1X	U1TF1	34.19	87.76	45.73	43.80	27.97						
		1/0 Channel System in combination Per Month			UNC1X	MQ1	69.75	86.10									
		Voice Grade COCI in combination - per month			UNCVX	1D1VG	0.4689	27.33	2.90	16.86	1.04						
		Additional 4-Wire Analog Voice Grade Loop in same DS1 Interoffice Transport Combination - Zone 1		1	UNCVX	UEAL4	17.80	195.94	36.38	18.42	6.86						
		Additional 4-Wire Analog Voice Grade Loop in same DS1 Interoffice Transport Combination - Zone 2		2	UNCVX	UEAL4	21.68	195.94	36.38	18.42	6.86						
		Additional 4-Wire Analog Voice Grade Loop in same DS1 Interoffice Transport Combination - Zone 3		3	UNCVX	UEAL4	30.25	195.94	36.38	18.42	6.86						
		Additional Voice Grade COCI in combination - per month			UNCVX	1D1VG	0.4689	27.33	2.90	16.86	1.04						
		Nonrecurring Currently Combined Network Elements Switch -As-Is Charge			UNC1X	UNCCC		5.70	5.70	6.61	6.61						
	EXTENDED 4-WIRE 56 KBPS EXTENDED DIGITAL LOOP WITH DEDICATED DS1 INTEROFFICE TRANSPORT																
		First 4-Wire 56Kbps Digital Grade Loop in Combination - Zone 1		1	UNCDX	UDL56	21.86	195.94	36.38	18.42	6.86						
		First 4-Wire 56Kbps Digital Grade Loop in Combination - Zone 2		2	UNCDX	UDL56	28.36	195.94	36.38	18.42	6.86						
		First 4-Wire 56Kbps Digital Grade Loop in Combination - Zone 3		3	UNCDX	UDL56	38.22	195.94	36.38	18.42	6.86						
		Interoffice Transport - Dedicated - DS1 combination - Per Mile Per Month			UNC1X	1L5XX	0.1154										
		Interoffice Transport - Dedicated - DS1 - combination Facility Termination Per Month			UNC1X	U1TF1	34.19	87.76	45.73	43.80	27.97						
		1/0 Channel System in combination Per Month			UNC1X	MQ1	69.75	86.10									
		OCU-DP COCI (data) per month (2.4-64kbs)			UNCDX	1D1DD	0.9963	27.33	2.90	16.86	1.04						
		Additional 4-Wire 56Kbps Digital Grade Loop in same DS1 Interoffice Transport Combination - Zone 1		1	UNCDX	UDL56	21.86	195.94	36.38	18.42	6.86						
		Additional 4-Wire 56Kbps Digital Grade Loop in same DS1 Interoffice Transport Combination - Zone 2		2	UNCDX	UDL56	28.36	195.94	36.38	18.42	6.86						
		Additional 4-Wire 56Kbps Digital Grade Loop in same DS1 Interoffice Transport Combination - Zone 3		3	UNCDX	UDL56	38.22	195.94	36.38	18.42	6.86						
		Additional OCU-DP COCI (data) - in combination per month (2.4-64kbs)			UNCDX	1D1DD	0.9963	27.33	2.90	16.86	1.04						

UNBUNDLED NETWORK ELEMENTS - Georgia														Attachment: 2		Exhibit: A	
CATEGORY		RATE ELEMENTS	Interim	Zone	BCS	USOC	RATES ($)					Svc Order Submitted Elec per LSR	Svc Order Submitted Manually per LSR	Incremental Charge - Manual Svc Order vs. Electronic-1st	Incremental Charge - Manual Svc Order vs. Electronic-Add'l	Incremental Charge - Manual Svc Order vs. Electronic-Disc 1st	Incremental Charge - Manual Svc Order vs. Electronic-Disc Add'l
							Rec	Nonrecurring		Nonrecurring Disconnect		OSS Rates ($)					
								First	Add'l	First	Add'l	SOMEC	SOMAN	SOMAN	SOMAN	SOMAN	SOMAN
		Nonrecurring Currently Combined Network Elements Switch -As-Is Charge			UNC1X	UNCCC		5.70	5.70	6.61	6.61						
	EXTENDED 4-WIRE 64 KBPS EXTENDED DIGITAL LOOP WITH DEDICATED DS1 INTEROFFICE TRANSPORT																
		First 4-Wire 64Kbps Digital Grade Loop in Combination - Zone 1		1	UNCDX	UDL64	21.86	195.94	36.38	18.42	6.86						
		First 4-Wire 64Kbps Digital Grade Loop in Combination - Zone 2		2	UNCDX	UDL64	28.36	195.94	36.38	18.42	6.86						
		First 4-Wire 64Kbps Digital Grade Loop in Combination - Zone 3		3	UNCDX	UDL64	38.22	195.94	36.38	18.42	6.86						
		Interoffice Transport - Dedicated - DS1 combination - Per Mile Per Month			UNC1X	1L5XX	0.1154										
		interoffice Transport - Dedicated - DS1 combination - Facility Termination Per Month			UNC1X	U1TF1	34.19	87.76	45.73	43.80	27.97						
		1/0 Channel System in combination Per Month			UNC1X	MQ1	69.75	86.10									
		OCU-DP COCI (data) - in combination - per month (2.4-64kbs)			UNCDX	1D1DD	0.9963	27.33	2.90	16.86	1.04						
		Additional 4-Wire 64Kbps Digital Grade Loop in same DS1 Interoffice Transport Combination - Zone 1		1	UNCDX	UDL64	21.86	195.94	36.38	18.42	6.86						
		Additional 4-Wire 64Kbps Digital Grade Loop in same DS1 Interoffice Transport Combination - Zone 2		2	UNCDX	UDL64	28.36	195.94	36.38	18.42	6.86						
		Additional 4-Wire 64Kbps Digital Grade Loop in same DS1 Interoffice Transport Combination - Zone 3		3	UNCDX	UDL64	38.22	195.94	36.38	18.42	6.86						
		Additional OCU-DP COCI (data) - in combination - per month (2.4-64kbs)			UNCDX	1D1DD	0.9963	27.33	2.90	16.86	1.04						
		Nonrecurring Currently Combined Network Elements Switch -As-Is Charge			UNC1X	UNCCC		5.70	5.70	6.61	6.61						
	EXTENDED 4-WIRE DS1 DIGITAL EXTENDED LOOP WITH DEDICATED DS1 INTEROFFICE TRANSPORT																
		4-Wire DS1 Digital Loop in Combination - Zone 1		1	UNC1X	USLXX	41.02	209.45	70.44	37.91	6.86						
		4-Wire DS1 Digital Loop in Combination - Zone 2		2	UNC1X	USLXX	46.41	209.45	70.44	37.91	6.86						
		4-Wire DS1 Digital Loop in Combination - Zone 3		3	UNC1X	USLXX	62.03	209.45	70.44	37.91	6.86						
		Interoffice Transport - Dedicated - DS1 combination - Per Mile Per Month			UNC1X	1L5XX	0.1154										
		Interoffice Transport - Dedicated - DS1 combination - Facility Termination Per Month			UNC1X	U1TF1	34.19	87.76	45.73	43.80	27.97						
		Nonrecurring Currently Combined Network Elements Switch -As-Is Charge			UNC1X	UNCCC		5.70	5.70	6.61	6.61						
	EXTENDED 4-WIRE DS1 DIGITAL EXTENDED LOOP WITH DEDICATED DS3 INTEROFFICE TRANSPORT																
		First DS1Loop in Combination - Zone 1		1	UNC1X	USLXX	41.02	209.45	70.44	37.91	6.86						
		First DS1Loop in Combination - Zone 2		2	UNC1X	USLXX	46.41	209.45	70.44	37.91	6.86						
		First DS1Loop in Combination - Zone 3		3	UNC1X	USLXX	62.03	209.45	70.44	37.91	6.86						
		Interoffice Transport - Dedicated - DS3 combination - Per Mile Per Month			UNC3X	1L5XX	2.53										
		Interoffice Transport - Dedicated - DS3 - Facility Termination per month			UNC3X	U1TF3	342.02	325.91	77.07	49.56	32.88						
		3/1Channel System in combination per month			UNC3X	MQ3	121.90										
		DS1 COCI in combination per month			UNC1X	UC1D1	7.35	27.33	2.90	16.86	1.04						
		Additional DS1Loop in DS3 Interoffice Transport Combination - Zone 1		1	UNC1X	USLXX	41.02	209.45	70.44	37.91	6.86						
		Additional DS1Loop in DS3 Interoffice Transport Combination - Zone 2		2	UNC1X	USLXX	46.41	209.45	70.44	37.91	6.86						
		Additional DS1Loop in DS3 Interoffice Transport Combination - Zone 3		3	UNC1X	USLXX	62.03	209.45	70.44	37.91	6.86						
		Additoinal DS1 COCI in combination per month			UNC1X	UC1D1	7.35	27.33	2.90	16.86	1.04						
		Nonrecurring Currently Combined Network Elements Switch -As-Is Charge			UNC3X	UNCCC		5.70	5.70	6.61	6.61						
	EXTENDED 2-WIRE VOICE GRADE EXTENDED LOOP/ 2 WIRE VOICE GRADE INTEROFFICE TRANSPORT																
		2-WireVG Loop in combination - Zone 1		1	UNCVX	UEAL2	11.57	195.94	36.38	18.42	6.86						
		2-WireVG Loop in combination - Zone 2		2	UNCVX	UEAL2	16.95	195.94	36.38	18.42	6.86						
		2-WireVG Loop in combination - Zone 3		3	UNCVX	UEAL2	33.08	195.94	36.38	18.42	6.86						

UNBUNDLED NETWORK ELEMENTS - Georgia														Attachment: 2		Exhibit: A	
CATEGORY		RATE ELEMENTS	Interim	Zone	BCS	USOC	RATES ($)					Svc Order Submitted Elec per LSR	Svc Order Submitted Manually per LSR	Incremental Charge - Manual Svc Order vs. Electronic-1st	Incremental Charge - Manual Svc Order vs. Electronic-Add'l	Incremental Charge - Manual Svc Order vs. Electronic-Disc 1st	Incremental Charge - Manual Svc Order vs. Electronic-Disc Add'l
							Rec	Nonrecurring		Nonrecurring Disconnect		OSS Rates ($)					
								First	Add'l	First	Add'l	SOMEC	SOMAN	SOMAN	SOMAN	SOMAN	SOMAN
		Interoffice Transport - 2-wire VG - Dedicated- Per Mile Per Month			UNCVX	1L5XX	0.0057										
		Interoffice Transport - 2-wire VG - Dedicated - Facility Termination per month			UNCVX	U1TV2	12.87	66.53	33.61	43.42	27.60						
		Nonrecurring Currently Combined Network Elements Switch -As-Is Charge			UNCVX	UNCCC		5.70	5.70	6.61	6.61						
	EXTENDED 4-WIRE VOICE GRADE EXTENDED LOOP/ 4 WIRE VOICE GRADE INTEROFFICE TRANSPORT																
		4-WireVG Loop in combination - Zone 1		1	UNCVX	UEAL4	17.80	195.94	36.38	18.42	6.86						
		4-WireVG Loop in combination - Zone 2		2	UNCVX	UEAL4	21.68	195.94	36.38	18.42	6.86						
		4-WireVG Loop in combination - Zone 3		3	UNCVX	UEAL4	30.25	195.94	36.38	18.42	6.86						
		Interoffice Transport - 4-wire VG - Dedicated - Per Mile Per Month			UNCVX	1L5XX	0.0057										
		Interoffice Transport - 4-wire VG - Dedicated - Facility Termination per month			UNCVX	U1TV4	10.78	66.53	33.61	43.42	27.60						
		Nonrecurring Currently Combined Network Elements Switch -As-Is Charge			UNCVX	UNCCC		5.70	5.70	6.61	6.61						
	EXTENDED DS3 DIGITAL EXTENDED LOOP WITH DEDICATED DS3 INTEROFFICE TRANSPORT																
		DS3 Local Loop in combination - per mile per month			UNC3X	1L5ND	10.97										
		DS3 Local Loop in combination - Facility Termination per month			UNC3X	UE3PX	253.38	1,260.47	628.84	41.53	20.76						
		Interoffice Transport - Dedicated - DS3 - Per Mile per month			UNC3X	1L5XX	2.53										
		Interoffice Transport - Dedicated - DS3 combination - Facility Termination per month			UNC3X	U1TF3	342.02	325.91	77.07	49.56	32.88						
		Nonrecurring Currently Combined Network Elements Switch -As-Is Charge			UNC3X	UNCCC		5.70	5.70	6.61	6.61						
	EXTENDED STS-1 DIGITAL EXTENDED LOOP WITH DEDICATED STS-1 INTEROFFICE TRANSPORT																
		STS-1 Local Lolp in combination - per mile per month			UNCSX	1L5ND	10.97										
		STS-1 Local Loop in combination - Facility Termination per month			UNCSX	UDLS1	305.42	1,260.47	628.84	41.53	20.76						
		Interoffice Transport - Dedicated - STS-1 combination - per mile per month			UNCSX	1L5XX	2.53										
		Interoffice Transport - Dedicated - STS-1 combination - Facility Termination per month			UNCSX	U1TFS	358.67	325.91	77.07	49.56	32.88						
		Nonrecurring Currently Combined Network Elements Switch -As-Is Charge			UNCSX	UNCCC		5.70	5.70	6.61	6.61						
	EXTENDED 2-WIRE ISDN EXTENDED LOOP WITH DS1 INTEROFFICE TRANSPORT																
		First 2-Wire ISDN Loop in Combination - Zone 1		1	UNCNX	U1L2X	19.82	195.94	36.38	18.42	6.86						
		First 2-Wire ISDN Loop in Combination - Zone 2		2	UNCNX	U1L2X	26.26	195.94	36.38	18.42	6.86						
		First 2-Wire ISDN Loop in Combination - Zone 3		3	UNCNX	U1L2X	42.17	195.94	36.38	18.42	6.86						
		Interoffice Transport - Dedicated - DS1 combination - per mile per month			UNC1X	1L5XX	0.1154										
		Interoffice Transport - Dedicated - DS1 combination - Facility Termination per month			UNC1X	U1TF1	34.19	87.76	45.73	43.80	27.97						
		1/0 Channel System in combination - per month			UNC1X	MQ1	69.75	86.10									
		2-wire ISDN COCI (BRITE) - in combination - per month			UNCNX	UC1CA	1.66	27.33	2.90	16.86	1.04						
		Additional 2-wire ISDN Loop in same DS1Interoffice Transport Combination - Zone 1		1	UNCNX	U1L2X	19.82	195.94	36.38	18.42	6.86						
		Additional 2-wire ISDN Loop in same DS1Interoffice Transport Combination - Zone 2		2	UNCNX	U1L2X	26.26	195.94	36.38	18.42	6.86						
		Additional 2-wire ISDN Loop in same DS1Interoffice Transport Combination - Zone 3		3	UNCNX	U1L2X	42.17	195.94	36.38	18.42	6.86						
		Additional 2-wire ISDN COCI (BRITE) - in combination- per month			UNCNX	UC1CA	1.66	27.33	2.90	16.86	1.04						
		Nonrecurring Currently Combined Network Elements Switch -As-Is Charge			UNC1X	UNCCC		5.70	5.70	6.61	6.61						
	EXTENDED 4-WIRE DS1 DIGITAL EXTENDED LOOP WITH DEDICATED STS-1 INTEROFFICE TRANSPORT																
		First DS1 Loop Combination - Zone 1		1	UNC1X	USLXX	41.02	209.45	70.44	37.91	6.86						
		First DS1 Loop Combination - Zone 2		2	UNC1X	USLXX	46.41	209.45	70.44	37.91	6.86						
		First DS1 Loop Combination - Zone 3		3	UNC1X	USLXX	62.03	209.45	70.44	37.91	6.86						

UNBUNDLED NETWORK ELEMENTS - Georgia														Attachment: 2		Exhibit: A	
CATEGORY		RATE ELEMENTS	Interim	Zone	BCS	USOC	RATES ($)					Svc Order Submitted Elec per LSR	Svc Order Submitted Manually per LSR	Incremental Charge - Manual Svc Order vs. Electronic-1st	Incremental Charge - Manual Svc Order vs. Electronic-Add'l	Incremental Charge - Manual Svc Order vs. Electronic-Disc 1st	Incremental Charge - Manual Svc Order vs. Electronic-Disc Add'l
							Rec	Nonrecurring		Nonrecurring Disconnect		OSS Rates ($)					
								First	Add'l	First	Add'l	SOMEC	SOMAN	SOMAN	SOMAN	SOMAN	SOMAN
		Interoffice Transport - Dedicated - STS-1 combination - Per Mile Per Month			UNCSX	1L5XX	2.53										
		Interoffice Transport - Dedicated - STS-1 combination - Facility Termination per month			UNCSX	U1TFS	358.67	325.91	77.07	49.56	32.88						
		3/1 Channel System in combination per month			UNCSX	MQ3	121.90										
		DS1 COCI in combination per month			UNC1X	UC1D1	7.35	27.33	2.90	16.86	1.04						
		Additional DS1Loop in the same STS-1 Interoffice Transport Combination - Zone 1		1	UNC1X	USLXX	41.02	209.45	70.44	37.91	6.86						
		Additional DS1Loop in the same STS-1 Interoffice Transport Combination - Zone 2		2	UNC1X	USLXX	46.41	209.45	70.44	37.91	6.86						
		Additional DS1Loop in the same STS-1 Interoffice Transport Combination - Zone 3		3	UNC1X	USLXX	62.03	209.45	70.44	37.91	6.86						
		DS1 COCI in combination per month			UNC1X	UC1D1	7.35	27.33	2.90	16.86	1.04						
		Nonrecurring Currently Combined Network Elements Switch -As-Is Charge			UNCSX	UNCCC		5.70	5.70	6.61	6.61						
	EXTENDED 4-WIRE 56 KBPS DIGITAL EXTENDED LOOP WITH 56 KBPS INTEROFFICE TRANSPORT																
		4-wire 56 kbps Local Loop in combination - Zone 1		1	UNCDX	UDL56	21.86	195.94	36.38	18.42	6.86						
		4-wire 56 kbps Local Loop in combination - Zone 2		2	UNCDX	UDL56	28.36	195.94	36.38	18.42	6.86						
		4-wire 56 kbps Local Loop in combination - Zone 3		3	UNCDX	UDL56	38.22	195.94	36.38	18.42	6.86						
		Interoffice Transport - Dedicated - 4-wire 56 kbps combination - Per Mile per month			UNCDX	1L5XX	0.0057										
		Interoffice Transport - Dedicated - 4-wire 56 kbps combination - Facility Termination per month			UNCDX	U1TD5	7.83	66.53	33.61	43.42	27.60						
		Nonrecurring Currently Combined Network Elements Switch -As-Is Charge			UNCDX	UNCCC		5.70	5.70	6.61	6.61						
	EXTENDED 4-WIRE 64 KBPS DIGITAL EXTENDED LOOP WITH 64 KBPS INTEROFFICE TRANSPORT																
		4-wire 64 kbps Lcoal Loop in Combination - Zone 1		1	UNCDX	UDL64	21.86	195.94	36.38	18.42	6.86						
		4-wire 64 kbps Lcoal Loop in Combination - Zone 2		2	UNCDX	UDL64	28.36	195.94	36.38	18.42	6.86						
		4-wire 64 kbps Lcoal Loop in Combination - Zone 3		3	UNCDX	UDL64	38.22	195.94	36.38	18.42	6.86						
		Interoffice Transport - Dedicated - 4-wire 64 kbps combination - Per Mile per month			UNCDX	1L5XX	0.0057										
		Interoffice Transport - Dedicated - 4-wire 64 kbps combination - Facility Termination per month			UNCDX	U1TD6	7.83	66.53	33.61	43.42	27.60						
		Nonrecurring Currently Combined Network Elements Switch -As-Is Charge			UNCDX	UNCCC		5.70	5.70	6.61	6.61						
	EXTENDED 2-WIRE VOICE GRADE LOOP WITH DS1 INTEROFFICE TRANSPORT w/ 3/1 MUX																
		First 2-wire VG Loop (SL2) in Combination - Zone 1		1	UNCVX	UEAL2	11.57	195.94	36.38	18.42	6.86						
		First 2-wire VG Loop (SL2) in Combination - Zone 2		2	UNCVX	UEAL2	16.95	195.94	36.38	18.42	6.86						
		First 2-wire VG Loop (SL2) in Combination - Zone 3		3	UNCVX	UEAL2	33.08	195.94	36.38	18.42	6.86						
		First Interoffice Transport - Dedicated - DS1 combination - Per Mile			UNC1X	1L5XX	0.1154										
		First Interoffice Transport - Dedicated - DS1 combination - Facility Termination per month			UNC1X	U1TF1	34.19	87.76	45.73	43.80	27.97						
		Per each DS1 Channelization System Per Month			UNC1X	MQ1	69.75	86.10									
		Per each Voice Grade COCI - Per Month per month			UNCVX	1D1VG	0.4689	27.33	2.90	16.86	1.04						
		3/1 Channel System in combination per month			UNC3X	MQ3	121.90										
		Per each DS1 COCI in combination per month			UNC1X	UC1D1	7.35	27.33	2.90	16.86	1.04						
		Each Additional 2-Wire VG Loop(SL 2) in the same DS1 Interoffice Transport Combination - Zone 1		1	UNCVX	UEAL2	11.57	195.94	36.38	18.42	6.86						
		Each Additional 2-Wire VG Loop(SL2) in the same DS1 Interoffice Transport Combination - Zone 2		2	UNCVX	UEAL2	16.95	195.94	36.38	18.42	6.86						
		Each Additional 2-Wire VG Loop(SL2) in the same DS1 Interoffice Transport Combination - Zone 3		3	UNCVX	UEAL2	33.08	195.94	36.38	18.42	6.86						
		Each Additional Voice Grade COCI in combination - per month			UNCVX	1D1VG	0.4689	27.33	2.90	16.86	1.04						
		Each Additional DS1 Interoffice Channel per mile in same 3/1 Channel System per month			UNC1X	1L5XX	0.1154										
		Each Additional DS1 Interoffice Channel Facility Termination in same 3/1 Channel System per month			UNC1X	U1TF1	34.19	87.76	45.73	43.80	27.97						
		Each Additional DS1 COCI combination per month			UNC1X	UC1D1	7.35	27.33	2.90	16.86	1.04						

UNBUNDLED NETWORK ELEMENTS - Georgia														Attachment: 2		Exhibit: A	
CATEGORY		RATE ELEMENTS	Interim	Zone	BCS	USOC	RATES ($)					Svc Order Submitted Elec per LSR	Svc Order Submitted Manually per LSR	Incremental Charge - Manual Svc Order vs. Electronic-1st	Incremental Charge - Manual Svc Order vs. Electronic-Add'l	Incremental Charge - Manual Svc Order vs. Electronic-Disc 1st	Incremental Charge - Manual Svc Order vs. Electronic-Disc Add'l
							Rec	Nonrecurring		Nonrecurring Disconnect		OSS Rates ($)					
								First	Add'l	First	Add'l	SOMEC	SOMAN	SOMAN	SOMAN	SOMAN	SOMAN
		Nonrecurring Currently Combined Network Elements Switch -As-Is Charge			UNC1X	UNCCC		5.70	5.70	6.61	6.61						
	EXTENDED 4-WIRE VOICE GRADE LOOP WITH DEDICATED DS1 INTEROFFICE TRANSPORT w/ 3/1 MUX																
		First 4-Wire Analog Voice Grade Local Loop in Combination - Zone 1		1	UNCVX	UEAL4	17.80	195.94	36.38	18.42	6.86						
		First 4-Wire Analog Voice Grade Local Loop in Combination - Zone 2		2	UNCVX	UEAL4	21.68	195.94	36.38	18.42	6.86						
		First 4-Wire Analog Voice Grade Local Loop in Combination - Zone 3		3	UNCVX	UEAL4	30.25	195.94	36.38	18.42	6.86						
		First Interoffice Transport - Dedicated - DS1 combination - Per Mile Per Month			UNC1X	1L5XX	0.1154										
		First Interoffice Transport - Dedicated - DS1 - Facility Termination Per Month			UNC1X	U1TF1	34.19	87.76	45.73	43.80	27.97						
		Per each 1/0 Channel System in combination Per Month			UNC1X	MQ1	69.75	86.10									
		Per each Voice Grade COCI in combination - per month			UNCVX	1D1VG	0.4689	27.33	2.90	16.86	1.04						
		3/1 Channel System in combination per month			UNC3X	MQ3	121.90										
		Per each DS1 COCI in combination per month			UNC1X	UC1D1	7.35	27.33	2.90	16.86	1.04						
		Additional 4-Wire Analog Voice Grade Loop in same DS1 Interoffice Transport Combination - Zone 1		1	UNCVX	UEAL4	17.80	195.94	36.38	18.42	6.86						
		Additional 4-Wire Analog Voice Grade Loop in same DS1 Interoffice Transport Combination - Zone 2		2	UNCVX	UEAL4	21.68	195.94	36.38	18.42	6.86						
		Additional 4-Wire Analog Voice Grade Loop in same DS1 Interoffice Transport Combination - Zone 3		3	UNCVX	UEAL4	30.25	195.94	36.38	18.42	6.86						
		Each Additional DS1 Interoffice Channel per mile in same 3/1 Channel System per month			UNC1X	1L5XX	0.1154										
		Each Additional DS1 Interoffice Channel Facility Termination in same 3/1 Channel System per month			UNC1X	U1TF1	34.19	87.76	45.73	43.80	27.97						
		Additional Voice Grade COCI - in combination - per month			UNCVX	1D1VG	0.4689	27.33	2.90	16.86	1.04						
		Nonrecurring Currently Combined Network Elements Switch -As-Is Charge			UNC1X	UNCCC		5.70	5.70	6.61	6.61						
	EXTENDED 4-WIRE 56 KBPS DIGITAL EXTENDED LOOP WITH 56 KBPS INTEROFFICE TRANSPORT w/ 3/1 MUX																
		First 4-Wire 56Kbps Digital Grade Local Loop in Combination - Zone 1		1	UNCDX	UDL56	21.86	195.94	36.38	18.42	6.86						
		First 4-Wire 56Kbps Digital Grade Local Loop in Combination - Zone 2		2	UNCDX	UDL56	28.36	195.94	36.38	18.42	6.86						
		First 4-Wire 56Kbps Digital Grade Local Loop in Combination - Zone 3		3	UNCDX	UDL56	38.22	195.94	36.38	18.42	6.86						
		First Interoffice Transport - Dedicated - DS1 combination - Per Mile Per Month			UNC1X	1L5XX	0.1154										
		First Interoffice Transport - Dedicated - DS1 - combination Facility Termination Per Month			UNC1X	U1TF1	34.19	87.76	45.73	43.80	27.97						
		Per each 1/0 Channel System in combination Per Month			UNC1X	MQ1	69.75	86.10									
		Per each OCU-DP COCI (data) COCI per month (2.4-64kbs)			UNCDX	1D1DD	0.9963	27.33	2.90	16.86	1.04						
		3/1 Channel System in combination per month			UNC3X	MQ3	121.90										
		Per each DS1 COCI in combination per month			UNC1X	UC1D1	7.35	27.33	2.90	16.86	1.04						
		Additional 4-Wire 56Kbps Digital Grade Loop in same DS1 Interoffice Transport Combination - Zone 1		1	UNCDX	UDL56	21.86	195.94	36.38	18.42	6.86						
		Additional 4-Wire 56Kbps Digital Grade Loop in same DS1 Interoffice Transport Combination - Zone 2		2	UNCDX	UDL56	28.36	195.94	36.38	18.42	6.86						
		Additional 4-Wire 56Kbps Digital Grade Loop in same DS1 Interoffice Transport Combination - Zone 3		3	UNCDX	UDL56	38.22	195.94	36.38	18.42	6.86						
		OCU-DP COCI (data) COCI in combination per month (2.4-64kbs)			UNCDX	1D1DD	0.9963	27.33	2.90	16.86	1.04						
		Each Additional DS1 Interoffice Channel per mile in same 3/1 Channel System per month			UNC1X	1L5XX	0.1154										
		Each Additional DS1 Interoffice Channel Facility Termination in same 3/1 Channel System per month			UNC1X	U1TF1	34.19	87.76	45.73	43.80	27.97						
		Each Additional DS1 COCI in the same 3/1 channel system combination per month			UNC1X	UC1D1	7.35	27.33	2.90	16.86	1.04						

UNBUNDLED NETWORK ELEMENTS - Georgia														Attachment: 2		Exhibit: A	
CATEGORY		RATE ELEMENTS	Interim	Zone	BCS	USOC	RATES ($)					Svc Order Submitted Elec per LSR	Svc Order Submitted Manually per LSR	Incremental Charge - Manual Svc Order vs. Electronic-1st	Incremental Charge - Manual Svc Order vs. Electronic-Add'l	Incremental Charge - Manual Svc Order vs. Electronic-Disc 1st	Incremental Charge - Manual Svc Order vs. Electronic-Disc Add'l
							Rec	Nonrecurring		Nonrecurring Disconnect		OSS Rates ($)					
								First	Add'l	First	Add'l	SOMEC	SOMAN	SOMAN	SOMAN	SOMAN	SOMAN
		Nonrecurring Currently Combined Network Elements Switch -As-Is Charge			UNC1X	UNCCC		5.70	5.70	6.61	6.61						
	EXTENDED 4-WIRE 64 KBPS DIGITAL LOOP WITH DEDICATED DS1 INTEROFFICE TRANSPORT w/ 3/1 MUX																
		First 4-Wire 64Kbps Digital Grade Loop in a DS1 Interoffice Transport Combination - Zone 1		1	UNCDX	UDL64	21.86	195.94	36.38	18.42	6.86						
		First 4-Wire 64Kbps Digital Grade Loop in a DS1 Interoffice Transport Combination - Zone 2		2	UNCDX	UDL64	28.36	195.94	36.38	18.42	6.86						
		First 4-Wire 64Kbps Digital Grade Loop in a DS1 Interoffice Transport Combination - Zone 3		3	UNCDX	UDL64	38.22	195.94	36.38	18.42	6.86						
		First Interoffice Transport - Dedicated - DS1 combination - Per Mile Per Month			UNC1X	1L5XX	0.1154										
		First Interoffice Transport - Dedicated - DS1 combination - Facility Termination Per Month			UNC1X	U1TF1	34.19	87.76	45.73	43.80	27.97						
		Per each Channel System 1/0 in combination Per Month			UNC1X	MQ1	69.75	86.10									
		Per each OCU-DP COCI (data) in combination - per month (2.4-64kbs)			UNCDX	1D1DD	0.9963	27.33	2.90	16.86	1.04						
		3/1 Channel System in combination per month			UNC3X	MQ3	121.90										
		Per each DS1 COCI in combination per month			UNC1X	UC1D1	7.35	27.33	2.90	16.86	1.04						
		Additional 4-Wire 64Kbps Digital Grade Loop in same DS1 Interoffice Transport Combination - Zone 1		1	UNCDX	UDL64	21.86	195.94	36.38	18.42	6.86						
		Additional 4-Wire 64Kbps Digital Grade Loop in same DS1 Interoffice Transport Combination - Zone 2		2	UNCDX	UDL64	28.36	195.94	36.38	18.42	6.86						
		Additional 4-Wire 64Kbps Digital Grade Loop in same DS1 Interoffice Transport Combination - Zone 3		3	UNCDX	UDL64	38.22	195.94	36.38	18.42	6.86						
		Additional OCU-DP COCI (data) - DS1 to DS0 Channel System combination - per month (2.4-64kbs)			UNCDX	1D1DD	0.9963	27.33	2.90	16.86	1.04						
		Each Additional DS1 Interoffice Channel per mile in same 3/1 Channel System per month			UNC1X	1L5XX	0.1154										
		Each Additional DS1 Interoffice Channel Facility Termination in same 3/1 Channel System per month			UNC1X	U1TF1	34.19	87.76	45.73	43.80	27.97						
		Each Additional DS1 COCI in the same 3/1 channel system combination per month			UNC1X	UC1D1	7.35	27.33	2.90	16.86	1.04						
		Nonrecurring Currently Combined Network Elements Switch -As-Is Charge			UNC1X	UNCCC		5.70	5.70	6.61	6.61						
	EXTENDED 2-WIRE ISDN LOOP WITH DS1 INTEROFFICE TRANSPORT w/ 3/1 MUX																
		First 2-Wire ISDN Loop in a DS1 Interoffice Combination Transport - Zone 1		1	UNCNX	U1L2X	19.82	195.94	36.38	18.42	6.86						
		First 2-Wire ISDN Loop in a DS1 Interoffice Combination Transport - Zone 2		2	UNCNX	U1L2X	26.26	195.94	36.38	18.42	6.86						
		First 2-Wire ISDN Loop in a DS1 Interoffice Combination Transport - Zone 3		3	UNCNX	U1L2X	42.17	195.94	36.38	18.42	6.86						
		First Interoffice Transport - Dedicated - DS1 combination - Per Mile per month			UNC1X	1L5XX	0.1154										
		First Interoffice Transport - Dedicated - DS1 combination - Facility Termination per month			UNC1X	U1TF1	34.19	87.76	45.73	43.80	27.97						
		Per each Channel System 1/0 in combination - per month			UNC1X	MQ1	69.75	86.10									
		Per each 2-wire ISDN COCI (BRITE) in combination - per month			UNCNX	UC1CA	1.66	27.33	2.90	16.86	1.04						
		3/1 Channel System in combination per month			UNC3X	MQ3	121.90										
		Per each DS1 COCI in combination per month			UNC1X	UC1D1	7.35	27.33	2.90	16.86	1.04						
		Additional 2-wire ISDN Loop in same DS1Interoffice Transport Combination - Zone 1		1	UNCNX	U1L2X	19.82	195.94	36.38	18.42	6.86						
		Additional 2-wire ISDN Loop in same DS1Interoffice Transport Combination - Zone 2		2	UNCNX	U1L2X	26.26	195.94	36.38	18.42	6.86						
		Additional 2-wire ISDN Loop in same DS1Interoffice Transport Combination - Zone 3		3	UNCNX	U1L2X	42.17	195.94	36.38	18.42	6.86						
		Additional 2-wire ISDN COCI (BRITE) in same 1/0 channel system combination- per month			UNCNX	UC1CA	1.66	27.33	2.90	16.86	1.04						

UNBUNDLED NETWORK ELEMENTS - Georgia														Attachment: 2		Exhibit: A	
CATEGORY		RATE ELEMENTS	Interim	Zone	BCS	USOC	RATES ($)					Svc Order Submitted Elec per LSR	Svc Order Submitted Manually per LSR	Incremental Charge - Manual Svc Order vs. Electronic-1st	Incremental Charge - Manual Svc Order vs. Electronic-Add'l	Incremental Charge - Manual Svc Order vs. Electronic-Disc 1st	Incremental Charge - Manual Svc Order vs. Electronic-Disc Add'l
							Rec	Nonrecurring		Nonrecurring Disconnect		OSS Rates ($)					
								First	Add'l	First	Add'l	SOMEC	SOMAN	SOMAN	SOMAN	SOMAN	SOMAN
		Each Additional DS1 Interoffice Channel per mile in same 3/1 Channel System per month			UNC1X	1L5XX	0.1154										
		Each Additional DS1 Interoffice Channel Facility Termination in same 3/1 Channel System per month			UNC1X	U1TF1	34.19	87.76	45.73	43.80	27.97						
		Each Additional DS1 COCI in the same 3/1 channel system combination per month			UNC1X	UC1D1	7.35	27.33	2.90	16.86	1.04						
		Nonrecurring Currently Combined Network Elements Switch -As-Is Charge			UNC1X	UNCCC		5.70	5.70	6.61	6.61						
	EXTENDED 4-WIRE DS1 LOOP WITH DEDICATED DS1 INTEROFFICE TRANSPORT w/ 3/1 MUX																
		First 4-wire DS1 Digital Lcoal Loop in Combination - Zone 1		1	UNC1X	USLXX	41.02	209.45	70.44	37.91	6.86						
		First 4-wire DS1 Digital Lcoal Loop in Combination - Zone 2		2	UNC1X	USLXX	46.41	209.45	70.44	37.91	6.86						
		First 4-wire DS1 Digital Lcoal Loop in Combination - Zone 3		3	UNC1X	USLXX	62.03	209.45	70.44	37.91	6.86						
		First Interoffice Transport - Dedicated - DS1 combination - Per Mile Per Month			UNC1X	1L5XX	0.1154										
		First Interoffice Transport - Dedicated - DS1 combination - Facility Termination Per Month			UNC1X	U1TF1	34.19	87.76	45.73	43.80	27.97						
		3/1 Channel System in combination per month			UNC3X	MQ3	121.90										
		Per each DS1 COCI combination per month			UNC1X	UC1D1	7.35	27.33	2.90	16.86	1.04						
		Each Additional DS1 Interoffice Channel per mile in same 3/1 Channel System per month			UNC1X	1L5XX	0.1154										
		Each Additional DS1 Interoffice Channel Facility Termination in same 3/1 Channel System per month			UNC1X	U1TF1	34.19	87.76	45.73	43.80	27.97						
		Each Additional DS1 COCI in the same 3/1 channel system combination per month			UNC1X	UC1D1	7.35	27.33	2.90	16.86	1.04						
		Additional 4-Wire DS1 Digital Local Loop in Combination - Zone 1		1	UNC1X	USLXX	41.02	209.45	70.44	37.91	6.86						
		Additional 4-Wire DS1 Digital Local Loop in Combination - Zone 2		2	UNC1X	USLXX	46.41	209.45	70.44	37.91	6.86						
		Additional 4-Wire DS1 Digital Local Loop in Combination - Zone 3		3	UNC1X	USLXX	62.03	209.45	70.44	37.91	6.86						
		Nonrecurring Currently Combined Network Elements Switch -As-Is Charge			UNC1X	UNCCC		5.70	5.70	6.61	6.61						
	EXTENDED 4-WIRE 56 KBPS DIGITAL EXTENDED LOOP WITH DS0 INTEROFFICE TRANSPORT																
		First 4-wire 56 kbps Local Loop in combination - Zone 1		1	UNCDX	UDL56	21.86	195.94	36.38	18.42	6.86						
		First 4-wire 56 kbps Local Loop in combination - Zone 2		2	UNCDX	UDL56	28.36	195.94	36.38	18.42	6.86						
		First 4-wire 56 kbps Local Loop in combination - Zone 3		3	UNCDX	UDL56	38.22	195.94	36.38	18.42	6.86						
		First 4-wiree 56 kbps Interoffice Transport - Dedicated - Per Mile per month			UNCDX	1L5XX	0.0057										
		First 4-wire 56 kbps Interoffice Transport - Dedicated - Facility Termination per month			UNCDX	U1TD5	7.83	66.53	33.61	43.42	27.60						
		Nonrecurring Currently Combined Network Elements Switch -As-Is Charge			UNCDX	UNCCC		5.70	5.70	6.61	6.61						
	EXTENDED 4-WIRE 64 KBPS DIGITAL EXTENDED LOOP WITH DS0 INTEROFFICE TRANSPORT																
		First 4-wire 64 kbps Local Loop in combination - Zone 1		1	UNCDX	UDL64	21.86	195.94	36.38	18.42	6.86						
		First 4-wire 64 kbps Local Loop in combination - Zone 2		2	UNCDX	UDL64	28.36	195.94	36.38	18.42	6.86						
		First 4-wire 64 kbps Local Loop in combination - Zone 3		3	UNCDX	UDL64	38.22	195.94	36.38	18.42	6.86						
		First I4-wire 65 kbps Interoffice Transport - Dedicated - Per Mile per month			UNCDX	1L5XX	0.0057										
		First 4-wire 64 kbps Interoffice Transport - Dedicated - Facility Termination per month			UNCDX	U1TD6	7.83	66.53	33.61	43.42	27.60						
		Nonrecurring Currently Combined Network Elements Switch -As-Is Charge			UNCDX	UNCCC		5.70	5.70	6.61	6.61						
ADDITIONAL NETWORK ELEMENTS																	
	When used as a part of a currently combined facility, the non-recurrng charges do not apply, but a Switch As Is charge does apply.																
	When used as ordinarily combined network elements in All States, the non-recurring charges apply and the Switch As Is Charge does not.																
	Nonrecurring Currently Combined Network Elements "Switch As Is" Charge (One applies to each combination)																
		Nonrecurring Currently Combined Network Elements Switch -As-Is Charge - 2 wire/4-Wire VG			UNCVX	UNCCC		5.70	5.70	6.61	6.61						

UNBUNDLED NETWORK ELEMENTS - Georgia														Attachment: 2		Exhibit: A	
CATEGORY		RATE ELEMENTS	Interim	Zone	BCS	USOC	RATES ($)					Svc Order Submitted Elec per LSR	Svc Order Submitted Manually per LSR	Incremental Charge - Manual Svc Order vs. Electronic-1st	Incremental Charge - Manual Svc Order vs. Electronic-Add'l	Incremental Charge - Manual Svc Order vs. Electronic-Disc 1st	Incremental Charge - Manual Svc Order vs. Electronic-Disc Add'l
							Rec	Nonrecurring		Nonrecurring Disconnect		OSS Rates ($)					
								First	Add'l	First	Add'l	SOMEC	SOMAN	SOMAN	SOMAN	SOMAN	SOMAN
		Nonrecurring Currently Combined Network Elements Switch -As-Is Charge - 56/64 kbps			UNCDX	UNCCC		5.70	5.70	6.61	6.61						
		Nonrecurring Currently Combined Network Elements Switch -As-Is Charge - DS1			UNC1X	UNCCC		5.70	5.70	6.61	6.61						
		Nonrecurring Currently Combined Network Elements Switch -As-Is Charge - DS3			UNC3X	UNCCC		5.70	5.70	6.61	6.61						
		Nonrecurring Currently Combined Network Elements Switch -As-Is Charge - STS1			UNCSX	UNCCC		5.70	5.70	6.61	6.61						
	Optional Features & Functions:																
		Clear Channel Capability Extended Frame Option - per DS1	I		U1TD1, ULDD1,UNC1X	CCOEF		0I	0I	0I	0I						
		Clear Channel Capability Super FrameOption - per DS1	I		U1TD1, ULDD1,UNC1X	CCOSF		0I	0I	0I	0I						
		Clear Channel Capability (SF/ESF) Option - Subsequent Activity - per DS1	I		ULDD1, U1TD1, UNC1X, USL	NRCCC		184.62S	23.78S	2.03S	0.79S						
		C-bit Parity Option - Subsequent Activity - per DS3	i		U1TD3, ULDD3, UE3, UNC3X	NRCC3		218.74S	7.66S	0.7591S	0S						
	MULTIPLEXERS																
		DS1 to DS0 Channel System per month			UNC1X	MQ1	69.75	86.10									
		OCU-DP COCI (data) - DS1 to DS0 Channel System - per month (2.4-64kbs) used for a Local Loop			UDL	1D1DD	0.9963	11.98	11.39	6.61	6.61						
		OCU-DP COCI (data) - DS1 to DS0 Channel System - per month (2.4-64kbs) used for connection to a channelized DS1 Local Channel in the same SWC as collocation			U1TUD	1D1DD	0.9963	11.98	11.39	6.61	6.61						
		2-wire ISDN COCI (BRITE) - DS1 to DS0 Channel Systsem - per month for a Local Loop			UDN	UC1CA	1.66	15.81	11.39	6.61	6.61						
		2-wire ISDN COCI (BRITE) - DS1 to DS0 Channel Systsem - per month used for connection to a channelized DS1 Local Channel in the same SWC as collocation			U1TUB	UC1CA	1.66	15.81	11.39	6.61	6.61						
		Voice Grade COCI - DS1 to DS0 Channel System - per month used for a Local Loop			UEA	1D1VG	0.4689	11.98	11.39	6.61	6.61						
		Voice Grade COCI - DS1 to DS0 Channel System - per month used for connection to a channelized DS1 Local Channel in the same SWC as collocation			U1TUC	1D1VG	0.4689	11.98	11.39	6.61	6.61						
		DS3 to DS1 Channel System per month			UNC3X	MQ3	121.90										
		STS-1 to DS1 Channel System per month			UNCSX	MQ3	121.90										
		DS1 COCI used with Loop per month			USL	UC1D1	7.35	15.81	11.39	6.61	6.61						
		DS1 COCI (used for connection to a channelized DS1 Local Channel in the same SWC as collocation) per month			U1TUA	UC1D1	7.35	15.81	11.39	6.61	6.61						
		DS1 COCI used with Interoffice Channel per month			U1TD1	UC1D1	7.35	15.81	11.39	6.61	6.61						
		DS3 Interface Unit (DS1 COCI) used with Local Channel per month			ULDD1	UC1D1	7.35	15.81	11.39	6.61	6.61						
UNBUNDLED LOCAL EXCHANGE SWITCHING(PORTS)																	
	Exchange Ports																
	NOTE: Although the Port Rate includes all available features in GA, KY, LA & TN, the desired features will need to be ordered using retail USOCs																
	2-WIRE VOICE GRADE LINE PORT RATES (RES)																
		Exchange Ports - 2-Wire Analog Line Port- Res.			UEPSR	UEPRL	1.09	2.42	2.31	1.37	1.28						
		Exchange Ports - 2-Wire Analog Line Port with Caller ID - Res.			UEPSR	UEPRC	1.09	2.42	2.31	1.37	1.28						
		Exchange Ports - 2-Wire Analog Line Port outgoing only - Res.			UEPSR	UEPRO	1.09	2.42	2.31	1.37	1.28						
		Exchange Ports - 2-Wire VG unbundled res, low usage line port with Caller ID (LUM)			UEPSR	UEPAP	1.09	2.42	2.31	1.37	1.28						
		Exchange Ports - 2-Wire Voice Georgia basic dialing port without Caller ID			UEPSR	UEPWC	1.09	2.42	2.31	1.37	1.28						
		2-Wire voice unbundled Georgia basic dialing port for use with Caller ID - res			UEPSR	UEPWQ	1.09	2.42	2.31	1.37	1.28						
		2-Wire voice unbundled Georgia basic dialing port - outgoing only			UEPSR	UEPWR	1.09	2.42	2.31	1.37	1.28						

UNBUNDLED NETWORK ELEMENTS - Georgia														Attachment: 2		Exhibit: A	
CATEGORY	RATE ELEMENTS	Interim	Zone	BCS	USOC	RATES ($)					Svc Order Submitted Elec per LSR	Svc Order Submitted Manually per LSR	Incremental Charge - Manual Svc Order vs. Electronic-1st	Incremental Charge - Manual Svc Order vs. Electronic-Add'l	Incremental Charge - Manual Svc Order vs. Electronic-Disc 1st	Incremental Charge - Manual Svc Order vs. Electronic-Disc Add'l
						Rec	Nonrecurring		Nonrecurring Disconnect		OSS Rates ($)					
							First	Add'l	First	Add'l	SOMEC	SOMAN	SOMAN	SOMAN	SOMAN	SOMAN
	2-Wire voice unbundled Low Usage Line Port without Caller ID Capability			UEPSR	UEPRT	1.09	2.42	2.31	1.37	1.28						
	2-Wire Voice Grade Unbundled Port without Caller ID capability, Georgia			UEPSR	UEPRV	1.09	2.42	2.31	1.37	1.28						
	2-Wire Voice Grade Unbundled Port with Caller ID capability, Georgia			UEPSR	UEPRU	1.09	2.42	2.31	1.37	1.28						
	Subsequent Activity			UEPSR	USASC	0.00	0.00	0.00								
FEATURES																
	All Available Vertical Features			UEPSR	UEPVF	0.775	0.00	0.00								
2-WIRE VOICE GRADE LINE PORT RATES (BUS)																
	Exchange Ports - 2-Wire Analog Line Port without Caller ID - Bus			UEPSB	UEPBL	1.09	2.42	2.31	1.37	1.28						
	Exchange Ports - 2-Wire VG unbundled Line Port with unbundled port with Caller+E484 ID - Bus.			UEPSB	UEPBC	1.09	2.42	2.31	1.37	1.28						
	Exchange Ports - 2-Wire Voice Georgia Business Basic Dialing Port, with Caller ID capability			UEPSB	UEPWP	1.09	2.42	2.31	1.37	1.28						
	Exchange Ports - 2-Wire Analog Line Port outgoing only - Bus.			UEPSB	UEPBO	1.09	2.42	2.31	1.37	1.28						
	Exhange Ports - 2-Wire VG unbundled incoming only port with Caller ID - Bus			UEPSB	UEPB1	1.09	2.42	2.31	1.37	1.28						
	Exchange Ports - 2-Wire Voice Georgia Business Dialing Plan without Caller ID			UEPSB	UEPWD	1.09	2.42	2.31	1.37	1.28						
	2-Wire voice unbundled Incoming Only Port without Caller ID Capability			UEPSB	UEPBE	1.09	2.42	2.31	1.37	1.28						
	Subsequent Activity			UEPSB	USASC	0.00	0.00	0.00								
FEATURES																
	All Available Vertical Features			UEPSB	UEPVF	0.775	0.00	0.00								
EXCHANGE PORT RATES (DID & PBX)																
	2-Wire VG Unbundled 2-Way PBX Trunk - Res			UEPSE	UEPRD	1.09	28.88	13.63	11.48	0.83						
	2-Wire VG Line Side Unbundled 2-Way PBX Trunk - Bus			UEPSP	UEPPC	1.09	28.88	13.63	11.48	0.83						
	2-Wire VG Line Side Unbundled Outward PBX Trunk - Bus			UEPSP	UEPPO	1.09	28.88	13.63	11.48	0.83						
	2-Wire VG Line Side Unbundled Incoming PBX Trunk - Bus			UEPSP	UEPP1	1.09	28.88	13.63	11.48	0.83						
	2-Wire Analog Long Distance Terminal PBX Trunk - Bus			UEPSP	UEPLD	1.09	28.88	13.63	11.48	0.83						
	2-Wire Voice Unbundled PBX LD Terminal Ports			UEPSP	UEPLD	1.09	28.88	13.63	11.48	0.83						
	2-Wire Vice Unbundled 2-Way PBX Usage Port			UEPSP	UEPXA	1.09	28.88	13.63	11.48	0.83						
	2-Wire Voice Unbundled PBX Toll Terminal Hotel Ports			UEPSP	UEPXB	1.09	28.88	13.63	11.48	0.83						
	2-Wire Voice Unbundled PBX LD DDD Terminals Port			UEPSP	UEPXC	1.09	28.88	13.63	11.48	0.83						
	2-Wire Voice Unbundled PBX LD Terminal Switchboard Port			UEPSP	UEPXD	1.09	28.88	13.63	11.48	0.83						
	2-Wire Voice Unbundled PBX LD Terminal Switchboard IDD Capable Port			UEPSP	UEPXE	1.09	28.88	13.63	11.48	0.83						
	2-Wire Voice Unbundled 2-Way PBX Hotel/Hospital Economy Administrative Calling Port			UEPSP	UEPXL	1.09	28.88	13.63	11.48	0.83						
	2-Wire Voice Unbundled 2-Way PBX Hotel/Hospital Economy Room Calling Port			UEPSP	UEPXM	1.09	28.88	13.63	11.48	0.83						
	2-Wire Voice Unbundled 1-Way Outgoing PBX Hotel/Hospital Discount Room Calling Port			UEPSP	UEPXO	1.09	28.88	13.63	11.48	0.83						
	2-Wire Voice Unbundled 1-Way Outgoing PBX Measured Port			UEPSP	UEPXS	1.09	28.88	13.63	11.48	0.83						
	2-Wire voice unbundled Georgia basic dialing port - 1-Way Oudial Trunk			UEPSP	UEPWS	1.09	28.88	13.63	11.48	0.83						
	2-Wire voice unbundled Georgia basic dialing port - 2-Way Trunk			UEPSP	UEPWT	1.09	28.88	13.63	11.48	0.83						
	2-Wire voice unbundled Georgia basic dialing port - 2-way PBX Trunk			UEPSP	UEPPQ	1.09	28.88	13.63	11.48	0.83						
	Subsequent Activity			UEPSP	USASC	0.00	0.00	0.00								
FEATURES																
	All Available Vertical Features			UEPSP UEPSE	UEPVF	0.775	0.00	0.00								
EXCHANGE PORT RATES (COIN)																
	Exchange Ports - Coin Port					1.09	2.42	2.31	1.37	1.28						
NOTE: Transmission/usage charges associated with POTS circuit switched usage will also apply to circuit switched voice and/or circuit switched data transmission by B-Channels associated with 2-wire ISDN ports.																

UNBUNDLED NETWORK ELEMENTS - Georgia														Attachment: 2		Exhibit: A	
CATEGORY	RATE ELEMENTS	Interim	Zone	BCS	USOC	RATES ($)					Svc Order Submitted Elec per LSR	Svc Order Submitted Manually per LSR	Incremental Charge - Manual Svc Order vs. Electronic-1st	Incremental Charge - Manual Svc Order vs. Electronic-Add'l	Incremental Charge - Manual Svc Order vs. Electronic-Disc 1st	Incremental Charge - Manual Svc Order vs. Electronic-Disc Add'l
						Rec	Nonrecurring		Nonrecurring Disconnect		OSS Rates ($)					
							First	Add'l	First	Add'l	SOMEC	SOMAN	SOMAN	SOMAN	SOMAN	SOMAN
	NOTE: Access to B Channel or D Channel Packet capabilities will be available only through BFR/New Business Request Process. Rates for the packet capabilities will be determined via the Bona Fide Request/New Business Request Process.															
UNBUNDLED LOCAL EXCHANGE SWITCHING(PORTS)																
	EXCHANGE PORT RATES															
	The DS1 Port rates below for 4-Wire DDITS Trunk Port and 4-Wire ISDN Port in this rate exhibit apply to the embedded base in place as of 10/2/03 until 4/1/04. After 4/1/04 these rates shall revert to tariff rates or a separate agreement.															
	Requests for 4-Wire DDITS Trunk Ports with 4-Wire ISDN DS1 Ports after the effective date of this amendment shall be provided pursuant to a separate agreement or tariff at BellSouth's discretion.															
	Exchange Ports - 2-Wire DID Port			UEPEX	UEPP2	5.50	122.26	18.65	54.82	3.45						
	Exchange Ports - DDITS Port - 4-Wire DS1 Port with DID capability (E:4/1/2004)			UEPDD	UEPDD	41.20	200.96	93.00	65.81	2.33						
	Exchange Ports - 2-Wire ISDN Port (See Notes below.)			UEPTX, UEPSX	U1PMA	6.09	76.39	51.50	45.67	10.36						
	All Features Offered			UEPTX, UEPSX	UEPVF	0.775	0.00	0.00								
	Exchange Ports - 2-Wire ISDN Port -- Channel Profiles			UEPTX, UEPSX	U1UMA	0.00	0.00	0.00								
	NOTE: Transmission/usage charges associated with POTS circuit switched usage will also apply to circuit switched voice and/or circuit switched data transmission by B-Channels associated with 2-wire ISDN ports.															
	NOTE: Access to B Channel or D Channel Packet capabilities will be available only through BFR/New Business Request Process. Rates for the packet capabilities will be determined via the Bona Fide Request/New Business Request Process.															
	EXCHANGE PORT RATES (continued)															
	Exchange Ports - 4-Wire ISDN DS1 Port with Detailed E911 Locator Capability (E:4/1/2004)			UEPEX	UEPEX	65.13	198.74	97.29	72.95	17.69						
	Exchange Ports - 4-Wire ISDN DS1 Port (E:4/1/2004)			UEPDX	UEPDX	65.13	198.74	97.29	72.95	17.69						
	Physical Collocation - DS1 Cross-Connects			UEPEX UEPDX	PE1P1	0.3726										
	Virtual collocation - Special Access & UNE, cross-connect per DS1			UEPEX UEPDX	CNC1X	0.3726										
	Detailed E911 with Locator Capability (required with UEPEX port)															
	Unbundled Exchange Ports, 4-Wire ISDN DS1 Port - E911 Locator Capability - Initial Profile Establishment per CLEC per State			UEPEX	UEP1A	0.00	1,818.00									
	Unbundled Exchange Ports, 4-Wire ISDN DS1 Port - E911 Locator Capability - Subsequent Profile Changes, Additions, Deletions			UEPEX	UEP1B	0.00	176.57									
	New or Additional PRI Telephone Numbers															
	Unbundled Exchange Ports, 4-Wire ISDN DS1 Port - E911 Locator Capability 2-way Telephone Numbers, per number in E911 profile [New or Additional]			UEPEX	UEP1C	0.0703	0.50									
	Unbundled Exchange Ports, 4-Wire ISDN DS1 Port - E911 Locator Capability - Outdial Telephone Numbers, per number in E911 profile [New or Additional]			UEPEX	UEP1D	0.0703	10.72	10.72								
	Unbundled Exchange Ports, 4-Wire ISDN DS1 Port - Inward Telephone Numbers - Inward Data Only Option [New or Additional]			UEPDX	UEP1E	0.00	0.50									
	Exchange Ports - 4-Wire ISDN DS1 Port - Subsequent [New] Inward Tel Numbers [Customer Testing Purposes]			UEPEX	PR7ZT	0.00	21.43	21.43								
	LOCAL NUMBER PORTABILITY															
	Local Number Portability (1 per port)			UEPEX UEPDX	LNPCN	1.75										
	INTERFACE (Provsioning Only)															
	Voice/Data			UEPEX	PR71V	0.00	0.00	0.00								
	Digital Data			UEPEX	PR71D	0.00	0.00	0.00								
	Inward Data			UEPDX	PR71E	0.00	0.00	0.00								
	New or Additional Channel															
	New or Additional - Voice/Data "B" Channel			UEPEX	PR7BV	0.00	28.71									
	New or Additional - Digital Data "B" Channel			UEPEX	PR7BF	0.00	28.71									
	New or Additional Inward Data "B" Channel			UEPDX	PR7BD	0.00	28.71									
	New or Additional Useage Sensitive Voice Data "B" Channel			UEPEX	PR7BS	0.00										
	New or Additional Useage Sensitive Digital Data "B" Channel			UEPEX	PR7BU	0.00										
	New or Additional PRI "D" Channel			UEPEX	PR7EX	0.00	28.71									
	CALL TYPES															
	Inward			UEPEX UEPDX	PR7C1	0.00	0.00	0.00								
	Outward			UEPEX	PR7CO	0.00	0.00	0.00								
	Two-way			UEPEX	PR7CC	0.00	0.00	0.00								
	UNBUNDLED PORT with REMOTE CALL FORWARDING CAPABILITY															
	UNBUNDLED REMOTE CALL FORWARDING SERVICE - RESIDENCE															
	Unbundled Remote Call Forwarding Service, Area Calling, Res			UEPVR	UERAC	1.09	2.42	2.31	1.37	1.28						

UNBUNDLED NETWORK ELEMENTS - Georgia														Attachment: 2		Exhibit: A	
CATEGORY	RATE ELEMENTS	Interim	Zone	BCS	USOC	RATES ($)					Svc Order Submitted Elec per LSR	Svc Order Submitted Manually per LSR	Incremental Charge - Manual Svc Order vs. Electronic-1st	Incremental Charge - Manual Svc Order vs. Electronic-Add'l	Incremental Charge - Manual Svc Order vs. Electronic-Disc 1st	Incremental Charge - Manual Svc Order vs. Electronic-Disc Add'l
						Rec	Nonrecurring		Nonrecurring Disconnect		OSS Rates ($)					
							First	Add'l	First	Add'l	SOMEC	SOMAN	SOMAN	SOMAN	SOMAN	SOMAN
	Unbundled Remote Call Forwarding Service, Local Calling - Res			UEPVR	UERLC	1.09	2.42	2.31	1.37	1.28						
	Unbundled Remote Call Forwarding Service, InterLATA - Res			UEPVR	UERTE	1.09	2.42	2.31	1.37	1.28						
	Unbundled Remote Call Forwarding Service, IntraLATA - Res			UEPVR	UERTR	1.09	2.42	2.31	1.37	1.28						
Non-Recurring																
	Unbundled Remote Call Forwarding Service - Conversion - Switch-as-is			UEPVR	USAC2		2.01	0.31								
	Unbundled Remote Call Forwarding Service - Conversion with allowed change (PIC and LPIC)			UEPVR	USACC		2.01	0.31								
UNBUNDLED REMOTE CALL FORWARDING - Bus																
	Unbundled Remote Call Forwarding Service, Area Calling - Bus			UEPVB	UERAC	1.09	2.42	2.31	1.37	1.28						
	Unbundled Remote Call Forwarding Service, Local Calling - Bus			UEPVB	UERLC	1.09	2.42	2.31	1.37	1.28						
	Unbundled Remote Call Forwarding Service, InterLATA - Bus			UEPVB	UERTE	1.09	2.42	2.31	1.37	1.28						
	Unbundled Remote Call Forwarding Service, IntraLATA - Bus			UEPVB	UERTR	1.09	2.42	2.31	1.37	1.28						
	Unbundled Remote Call Forwarding Service Expanded and Exception Local Calling			UEPVB	UERVJ	1.09	2.42	2.31	1.37	1.28						
Non-Recurring																
	Unbundled Remote Call Forwarding Service - Conversion - Switch-as-is			UEPVB	USAC2		2.01	0.31								
	Unbundled Remote Call Forwarding Service - Conversion with allowed change (PIC and LPIC)			UEPVB	USACC		2.01	0.31								
UNBUNDLED LOCAL SWITCHING, PORT USAGE																
End Office Switching (Port Usage)																
	End Office Switching Function, Per MOU					0.0006153										
	End Office Trunk Port - Shared, Per MOU					0.0001226										
Tandem Switching (Port Usage) (Local or Access Tandem)																
	Tandem Switching Function Per MOU					0.0000972										
	Tandem Trunk Port - Shared, Per MOU					0.0001557										
	Tandem Switching Function Per MOU (Melded)					0.000017904										
	Tandem Trunk Port - Shared, Per MOU (Melded)					0.00002868										
	Melded Factor: 18.42% of the Tandem Rate															
Common Transport																
	Common Transport - Per Mile, Per MOU					0.0000027										
	Common Transport - Facilities Termination Per MOU					0.0001914										
UNBUNDLED PORT/LOOP COMBINATIONS - COST BASED RATES																
Cost Based Rates are applied where BellSouth is required by FCC and/or State Commission rule to provide Unbundled Local Switching or Switch Ports.																
Features shall apply to the Unbundled Port/Loop Combination - Cost Based Rate section in the same manner as they are applied to the Stand-Alone Unbundled Port section of this Rate Exhibit.																
End Office and Tandem Switching Usage and Common Transport Usage rates in the Port section of this rate exhibit shall apply to all combinations of loop/port network elements except for UNE Coin Port/Loop Combinations.																
The first and additional Port nonrecurring charges apply to Not Currently Combined Combos. For Currently Combined Combos the nonrecurring charges shall be those identified in the Nonrecurring - Currently Combined sections.																
2-WIRE VOICE GRADE LOOP WITH 2-WIRE LINE PORT (RES)																
UNE Port/Loop Combination Rates																
	2-Wire VG Loop/Port Combo - Zone 1		1			10.46										
	2-Wire VG Loop/Port Combo - Zone 2		2			15.76										
	2-Wire VG Loop/Port Combo - Zone 3		3			32.56										
UNE Loop Rates																
	2-Wire Voice Grade Loop (SL1) - Zone 1		1	UEPRX	UEPLX	9.56										
	2-Wire Voice Grade Loop (SL1) - Zone 2		2	UEPRX	UEPLX	14.86										
	2-Wire Voice Grade Loop (SL1) - Zone 3		3	UEPRX	UEPLX	31.66										
2-Wire Voice Grade Line Port Rates (Res)																
	2-Wire voice unbundled port - residence			UEPRX	UEPRL	0.9019	10.05	7.36	1.37	1.28						
	2-Wire voice unbundled port with Caller ID - res			UEPRX	UEPRC	0.9019	10.05	7.36	1.37	1.28						
	2-Wire voice unbundled port outgoing only - res			UEPRX	UEPRO	0.9019	10.05	7.36	1.37	1.28						
	2-Wire voice unbundles res, low usage line port with Caller ID (LUM)			UEPRX	UEPAP	0.9019	10.05	7.36	1.37	1.28						
	2-Wire voice unbundled Georgia basic dialing port without Caller ID capability - res			UEPRX	UEPWC	0.9019	10.05	7.36	1.37	1.28						

UNBUNDLED NETWORK ELEMENTS - Georgia														Attachment: 2		Exhibit: A	
CATEGORY	RATE ELEMENTS	Interim	Zone	BCS	USOC	RATES ($)					Svc Order Submitted Elec per LSR	Svc Order Submitted Manually per LSR	Incremental Charge - Manual Svc Order vs. Electronic-1st	Incremental Charge - Manual Svc Order vs. Electronic-Add'l	Incremental Charge - Manual Svc Order vs. Electronic-Disc 1st	Incremental Charge - Manual Svc Order vs. Electronic-Disc Add'l
						Rec	Nonrecurring		Nonrecurring Disconnect		OSS Rates ($)					
							First	Add'l	First	Add'l	SOMEC	SOMAN	SOMAN	SOMAN	SOMAN	SOMAN
	2-Wire voice unbundled Georgia basic dialing port for use with Caller ID - res			UEPRX	UEPWQ	0.9019	10.05	7.36	1.37	1.28						
	2-Wire voice unbundled Georgia basic dialing port - outgoing only			UEPRX	UEPWR	0.9019	10.05	7.36	1.37	1.28						
	2-Wire voice unbundled Low Usage Line Port without Caller ID Capability			UEPRX	UEPRT	0.9019	10.05	7.36	1.37	1.28						
	2-Wire Voice Grade Unbundled Port without Caller ID, Georgia			UEPRX	UEPRV	0.9019	10.05	7.36	1.37	1.28						
	2-Wire Voice Grade Unbundled Port with Caller ID, Georgia			UEPRX	UEPRU	0.9019	10.05	7.36	1.37	1.28						
FEATURES																
	All Features Offered			UEPRX	UEPVF	0.775	0.00	0.00								
LOCAL NUMBER PORTABILITY																
	Local Number Portability (1 per port)			UEPRX	LNPCX	0.35										
NONRECURRING CHARGES (NRCs) - CURRENTLY COMBINED																
	2-Wire Voice Grade Loop / Line Port Combination - Conversion - Switch-as-is			UEPRX	USAC2		0.10	0.10								
	2-Wire Voice Grade Loop / Line Port Combination - Conversion - Switch with change			UEPRX	USACC		0.10	0.10								
ADDITIONAL NRCs																
	2-Wire Voice Grade Loop/Line Port Combination - Subsequent Activity			UEPRX	USAS2	0.00	0.00	0.00								
	Unbundled Miscellaneous Rate Element, Tag Loop at End User Premise			UEPRX	URETL		8.33	0.83								
OFF/ON PREMISES EXTENSION CHANNELS																
	2 Wire Analog Voice Grade Extension Loop – Non-Design		1	UEPRX	UEAEN	10.51	40.02	9.99	5.61	1.72						
	2 Wire Analog Voice Grade Extension Loop – Non-Design		2	UEPRX	UEAEN	15.85	40.02	9.99	5.61	1.72						
	2 Wire Analog Voice Grade Extension Loop – Non-Design		3	UEPRX	UEAEN	31.97	40.02	9.99	5.61	1.72						
	2 Wire Analog Voice Grade Extension Loop – Design		1	UEPRX	UEAED	11.57	79.85	24.65	18.92	7.87						
	2 Wire Analog Voice Grade Extension Loop – Design		2	UEPRX	UEAED	16.95	79.85	24.65	18.92	7.87						
	2 Wire Analog Voice Grade Extension Loop – Design		3	UEPRX	UEAED	33.08	79.85	24.65	18.92	7.87						
INTEROFFICE TRANSPORT																
	Interoffice Transport - Dedicated - 2 Wire Voice Grade - Facility Termination			UEPRX	U1TV2	12.87	48.46	19.48	16.58	5.00						
	Interoffice Transport - Dedicated - 2 Wire Voice Grade - Per Mile or Fraction Mile			UEPRX	U1TVM	0.0057	0.00	0.00								
2-WIRE VOICE GRADE LOOP WITH 2-WIRE LINE PORT (BUS)																
UNE Port/Loop Combination Rates																
	2-Wire VG Loop/Port Combo - Zone 1		1			10.46										
	2-Wire VG Loop/Port Combo - Zone 2		2			15.76										
	2-Wire VG Loop/Port Combo - Zone 3		3			32.56										
UNE Loop Rates																
	2-Wire Voice Grade Loop (SL1) - Zone 1		1	UEPBX	UEPLX	9.56										
	2-Wire Voice Grade Loop (SL1) - Zone 2		2	UEPBX	UEPLX	14.86										
	2-Wire Voice Grade Loop (SL1) - Zone 3		3	UEPBX	UEPLX	31.66										
2-Wire Voice Grade Line Port (Bus)																
	2-Wire voice unbundled port without Caller ID - bus			UEPBX	UEPBL	0.9019	10.05	7.36	1.37	1.28						
	2-Wire voice unbundled port with Caller + E484 ID - bus			UEPBX	UEPBC	0.9019	10.05	7.36	1.37	1.28						
	2-Wire voice unbundled port outgoing only - bus			UEPBX	UEPBO	0.9019	10.05	7.36	1.37	1.28						
	2-Wire voice unbundled incoming only port with Caller ID - Bus			UEPBX	UEPB1	0.9019	10.05	7.36	1.37	1.28						
	2-Wire voice unbundled Georgia basic dialing port, without Caller ID capability - bus			UEPBX	UEPWD	0.9019	10.05	7.36	1.37	1.28						
	2-Wire voice unbundled Georgia basic dialing port for use with Caller ID - bus			UEPBX	UEPWP	0.9019	10.05	7.36	1.37	1.28						
	2-Wire voice unbundled Incoming Only Port without Caller ID Capability			UEPBX	UEPBE	0.9019	10.05	7.36	1.37	1.28						
LOCAL NUMBER PORTABILITY																
	Local Number Portability (1 per port)			UEPBX	LNPCX	0.35										
FEATURES																
	All Features Offered			UEPBX	UEPVF	0.775	0.00	0.00								
NONRECURRING CHARGES (NRCs) - CURRENTLY COMBINED																

UNBUNDLED NETWORK ELEMENTS - Georgia														Attachment: 2		Exhibit: A	
CATEGORY	RATE ELEMENTS	Interim	Zone	BCS	USOC	RATES ($)					Svc Order Submitted Elec per LSR	Svc Order Submitted Manually per LSR	Incremental Charge - Manual Svc Order vs. Electronic-1st	Incremental Charge - Manual Svc Order vs. Electronic-Add'l	Incremental Charge - Manual Svc Order vs. Electronic-Disc 1st	Incremental Charge - Manual Svc Order vs. Electronic-Disc Add'l
						Rec	Nonrecurring		Nonrecurring Disconnect		OSS Rates ($)					
							First	Add'l	First	Add'l	SOMEC	SOMAN	SOMAN	SOMAN	SOMAN	SOMAN
	2-Wire Voice Grade Loop / Line Port Combination - Conversion - Switch-as-is			UEPBX	USAC2		0.10	0.10								
	2-Wire Voice Grade Loop / Line Port Combination - Conversion - Switch with change			UEPBX	USACC		0.10	0.10								
ADDITIONAL NRCs																
	2-Wire Voice Grade Loop/Line Port Combination - Subsequent Activity			UEPBX	USAS2		0.00	0.00								
	Unbundled Miscellaneous Rate Element, Tag Loop at End User Premise			UEPBX	URETL		8.33	0.83								
OFF/ON PREMISES EXTENSION CHANNELS																
	2 Wire Analog Voice Grade Extension Loop – Non-Design		1	UEPBX	UEAEN	10.51	40.02	9.99	5.61	1.72						
	2 Wire Analog Voice Grade Extension Loop – Non-Design		2	UEPBX	UEAEN	15.85	40.02	9.99	5.61	1.72						
	2 Wire Analog Voice Grade Extension Loop – Non-Design		3	UEPBX	UEAEN	31.97	40.02	9.99	5.61	1.72						
	2 Wire Analog Voice Grade Extension Loop – Design		1	UEPBX	UEAED	11.57	79.85	24.65	18.92	7.87						
	2 Wire Analog Voice Grade Extension Loop – Design		2	UEPBX	UEAED	16.95	79.85	24.65	18.92	7.87						
	2 Wire Analog Voice Grade Extension Loop – Design		3	UEPBX	UEAED	33.08	79.85	24.65	18.92	7.87						
INTEROFFICE TRANSPORT																
	Interoffice Transport - Dedicated - 2 Wire Voice Grade - Facility Termination			UEPBX	U1TV2	12.87	48.46	19.48	16.58	5.00						
	Interoffice Transport - Dedicated - 2 Wire Voice Grade - Per Mile or Fraction Mile			UEPBX	U1TVM	0.0057	0.00	0.00								
2-WIRE VOICE GRADE LOOP WITH 2-WIRE LINE PORT (RES - PBX)																
UNE Port/Loop Combination Rates																
	2-Wire VG Loop/Port Combo - Zone 1		1			10.46										
	2-Wire VG Loop/Port Combo - Zone 2		2			15.76										
	2-Wire VG Loop/Port Combo - Zone 3		3			32.56										
UNE Loop Rates																
	2-Wire Voice Grade Loop (SL 1) - Zone 1		1	UEPRG	UEPLX	9.56										
	2-Wire Voice Grade Loop (SL 1) - Zone 2		2	UEPRG	UEPLX	14.86										
	2-Wire Voice Grade Loop (SL 1) - Zone 3		3	UEPRG	UEPLX	31.66										
2-Wire Voice Grade Line Port Rates (RES - PBX)																
	2-Wire VG Unbundled Combination 2-Way PBX Trunk Port - Res			UEPRG	UEPRD	0.9019	10.05	7.36	1.37	1.28						
LOCAL NUMBER PORTABILITY																
	Local Number Portability (1 per port)			UEPRG	LNPCP	3.15	0.00	0.00								
FEATURES																
	All Features Offered			UEPRG	UEPVF	0.775	0.00	0.00								
NONRECURRING CHARGES (NRCs) - CURRENTLY COMBINED																
	2-Wire Voice Grade Loop/ Line Port Combination (PBX) - Conversion - Switch-As-Is			UEPRG	USAC2		0.10	0.10								
	2-Wire Voice Grade Loop/ Line Port Combination (PBX) - Conversion - Switch with Change			UEPRG	USACC		0.10	0.10								
ADDITIONAL NRCs																
	2-Wire Voice Grade Loop/ Line Port Combination (PBX) - Subsequent Activity			UEPRG	USAS2	0.00	0.00	0.00								
	PBX Subsequent Activity - Change/Rearrange Multiline Hunt Group						6.70	6.70								
	Unbundled Miscellaneous Rate Element, Tag Loop at End User Premise			UEPRG	URETL		8.33	0.83								
OFF/ON PREMISES EXTENSION CHANNELS																
	Local Channel Voice grade, per termination		1	UEPRG	P2JHX	11.57	79.85	24.65	18.92	7.87						
	Local Channel Voice grade, per termination		2	UEPRG	P2JHX	16.95	79.85	24.65	18.92	7.87						
	Local Channel Voice grade, per termination		3	UEPRG	P2JHX	33.08	79.85	24.65	18.92	7.87						
	Non-Wire Direct Serve Channel Voice Grade		1	UEPRG	SDD2X	12.74	56.92	7.70	4.40	0.02						
	Non-Wire Direct Serve Channel Voice Grade		2	UEPRG	SDD2X	19.76	56.92	7.70	4.40	0.02						
	Non-Wire Direct Serve Channel Voice Grade		3	UEPRG	SDD2X	37.18	56.92	7.70	4.40	0.02						
INTEROFFICE TRANSPORT																
	Interoffice Transport - Dedicated - 2 Wire Voice Grade - Facility Termination			UEPRG	U1TV2	12.87	48.46	19.48	16.58	5.00						

UNBUNDLED NETWORK ELEMENTS - Georgia														Attachment: 2		Exhibit: A	
CATEGORY	RATE ELEMENTS	Interim	Zone	BCS	USOC	RATES ($)					Svc Order Submitted Elec per LSR	Svc Order Submitted Manually per LSR	Incremental Charge - Manual Svc Order vs. Electronic-1st	Incremental Charge - Manual Svc Order vs. Electronic-Add'l	Incremental Charge - Manual Svc Order vs. Electronic-Disc 1st	Incremental Charge - Manual Svc Order vs. Electronic-Disc Add'l
						Rec	Nonrecurring		Nonrecurring Disconnect		OSS Rates ($)					
							First	Add'l	First	Add'l	SOMEC	SOMAN	SOMAN	SOMAN	SOMAN	SOMAN
	Interoffice Transport - Dedicated - 2 Wire Voice Grade - Per Mile or Fraction Mile			UEPRG	U1TVM	0.0057	0.00	0.00								
2-WIRE VOICE GRADE LOOP WITH 2-WIRE LINE PORT (BUS - PBX)																
UNE Port/Loop Combination Rates																
	2-Wire VG Loop/Port Combo - Zone 1		1			10.46										
	2-Wire VG Loop/Port Combo - Zone 2		2			15.76										
	2-Wire VG Loop/Port Combo - Zone 3		3			32.56										
UNE Loop Rates																
	2-Wire Voice Grade Loop (SL 1) - Zone 1		1	UEPPX	UEPLX	9.56										
	2-Wire Voice Grade Loop (SL 1) - Zone 2		2	UEPPX	UEPLX	14.86										
	2-Wire Voice Grade Loop (SL 1) - Zone 3		3	UEPPX	UEPLX	31.66										
2-Wire Voice Grade Line Port Rates (BUS - PBX)																
	Line Side Unbundled Combination 2-Way PBX Trunk Port - Bus			UEPPX	UEPPC	0.9019	10.05	7.36	1.37	1.28						
	Line Side Unbundled Outward PBX Trunk Port - Bus			UEPPX	UEPPO	0.9019	10.05	7.36	1.37	1.28						
	Line Side Unbundled Incoming PBX Trunk Port - Bus			UEPPX	UEPP1	0.9019	10.05	7.36	1.37	1.28						
	2-Wire Voice Unbundled PBX LD Terminal Ports			UEPPX	UEPLD	0.9019	10.05	7.36	1.37	1.28						
	2-Wire Voice Unbundled 2-Way Combination PBX Usage Port			UEPPX	UEPXA	0.9019	10.05	7.36	1.37	1.28						
	2-Wire Voice Unbundled PBX Toll Terminal Hotel Ports			UEPPX	UEPXB	0.9019	10.05	7.36	1.37	1.28						
	2-Wire Voice Unbundled PBX LD DDD Terminals Port			UEPPX	UEPXC	0.9019	10.05	7.36	1.37	1.28						
	2-Wire Voice Unbundled PBX LD Terminal Switchboard Port			UEPPX	UEPXD	0.9019	10.05	7.36	1.37	1.28						
	2-Wire Voice Unbundled PBX LD Terminal Switchboard IDD Capable Port			UEPPX	UEPXE	0.9019	10.05	7.36	1.37	1.28						
	2-Wire Voice Unbundled 2-Way PBX Hotel/Hospital Economy Administrative Calling Port			UEPPX	UEPXL	0.9019	10.05	7.36	1.37	1.28						
	2-Wire Voice Unbundled 2-Way PBX Hotel/Hospital Economy Room Calling Port			UEPPX	UEPXM	0.9019	10.05	7.36	1.37	1.28						
	2-Wire Voice Unbundled 1-Way Outgoing PBX Hotel/Hospital Discount Room Calling Port			UEPPX	UEPXO	0.9019	10.05	7.36	1.37	1.28						
	2-Wire Voice Unbundled 1-Way Outgoing PBX Measured Port			UEPPX	UEPXS	0.9019	10.05	7.36	1.37	1.28						
	2-Wire voice unbundled Georgia basic dialing port - 1-Way Oudial Trunk			UEPPX	UEPWS	0.9019	10.05	7.36	1.37	1.28						
	2-Wire voice unbundled Georgia basic dialing port - 2-Way Trunk			UEPPX	UEPWT	0.9019	10.05	7.36	1.37	1.28						
	2-Wire voice unbundled Georgia basic dialing port - 2-way PBX Trunk			UEPPX	UEPPQ	0.9019	10.05	7.36	1.37	1.28						
	2-Wire voice unbundled Georgia basic dialing port - PBX LD Terminal Ports			UEPPX	UEPPS	0.9019	10.05	7.36	1.37	1.28						
	2-Wire voice unbundled Georgia basic dialing port - PBX Toll Terminal Ports			UEPPX	UEPPT	0.9019	10.05	7.36	1.37	1.28						
	2-Wire voice unbundled Georgia basic dialing port - PBX LD DDD Terminal Port			UEPPX	UEPPU	0.9019	10.05	7.36	1.37	1.28						
	2-Wire voice unbundled Georgia basic dialing port - PBX LD Terminal Switchboard Port			UEPPX	UEPPV	0.9019	10.05	7.36	1.37	1.28						
	2-Wire voice unbundled Georgia basic dialing port - PBX LD Terminal Switchboard DDD Capable Port			UEPPX	UEPPW	0.9019	10.05	7.36	1.37	1.28						
	2-Wire voice unbundled Georgia basic dialing port - PBX 2-Way Trunk			UEPPX	UEPPC	0.9019	10.05	7.36	1.37	1.28						
LOCAL NUMBER PORTABILITY																
	Local Number Portability (1 per port)			UEPPX	LNPCP	3.15	0.00	0.00								
FEATURES																
	All Features Offered			UEPPX	UEPVF	0.775	0.00	0.00								
NONRECURRING CHARGES (NRCs) - CURRENTLY COMBINED																
	2-Wire Voice Grade Loop/ Line Port Combination (PBX) - Conversion - Switch-As-Is			UEPPX	USAC2		0.10	0.10								
	2-Wire Voice Grade Loop/ Line Port Combination (PBX) - Conversion - Switch with Change			UEPPX	USACC		0.10	0.10								
ADDITIONAL NRCs																

UNBUNDLED NETWORK ELEMENTS - Georgia														Attachment: 2		Exhibit: A	
CATEGORY	RATE ELEMENTS	Interim	Zone	BCS	USOC	RATES ($)					Svc Order Submitted Elec per LSR	Svc Order Submitted Manually per LSR	Incremental Charge - Manual Svc Order vs. Electronic-1st	Incremental Charge - Manual Svc Order vs. Electronic-Add'l	Incremental Charge - Manual Svc Order vs. Electronic-Disc 1st	Incremental Charge - Manual Svc Order vs. Electronic-Disc Add'l
						Rec	Nonrecurring		Nonrecurring Disconnect		OSS Rates ($)					
							First	Add'l	First	Add'l	SOMEC	SOMAN	SOMAN	SOMAN	SOMAN	SOMAN
	2-Wire Voice Grade Loop/ Line Port Combination (PBX) - Subsequent Activity			UEPPX	USAS2	0.00	0.00	0.00								
	PBX Subsequent Activity - Change/Rearrange Multiline Hunt Group						6.70	6.70								
	Unbundled Miscellaneous Rate Element, Tag Loop at End User Premise			UEPPX	URETL		8.33	0.83								
OFF/ON PREMISES EXTENSION CHANNELS																
	Local Channel Voice grade, per termination		1	UEPPX	P2JHX	11.57	79.85	24.65	18.92	7.87						
	Local Channel Voice grade, per termination		2	UEPPX	P2JHX	16.95	79.85	24.65	18.92	7.87						
	Local Channel Voice grade, per termination		3	UEPPX	P2JHX	33.08	79.85	24.65	18.92	7.87						
	Non-Wire Direct Serve Channel Voice Grade		1	UEPPX	SDD2X	12.74	56.92	7.70	4.40	0.02						
	Non-Wire Direct Serve Channel Voice Grade		2	UEPPX	SDD2X	19.76	56.92	7.70	4.40	0.02						
	Non-Wire Direct Serve Channel Voice Grade		3	UEPPX	SDD2X	37.18	56.92	7.70	4.40	0.02						
INTEROFFICE TRANSPORT																
	Interoffice Transport - Dedicated - 2 Wire Voice Grade - Facility Termination			UEPPX	U1TV2	12.87	48.46	19.48	16.58	5.00						
	Interoffice Transport - Dedicated - 2 Wire Voice Grade - Per Mile or Fraction Mile			UEPPX	U1TVM	0.0057	0.00	0.00								
2-WIRE VOICE GRADE LOOP WITH 2-WIRE ANALOG LINE COIN PORT																
UNE Port/Loop Combination Rates																
	2-Wire VG Coin Port/Loop Combo – Zone 1		1			10.46										
	2-Wire VG Coin Port/Loop Combo – Zone 2		2			15.76										
	2-Wire VG Coin Port/Loop Combo – Zone 3		3			32.56										
UNE Loop Rates																
	2-Wire Voice Grade Loop (SL1) - Zone 1		1	UEPCO	UEPLX	9.56										
	2-Wire Voice Grade Loop (SL1) - Zone 2		2	UEPCO	UEPLX	14.86										
	2-Wire Voice Grade Loop (SL1) - Zone 3		3	UEPCO	UEPLX	31.66										
2-Wire Voice Grade Line Ports (COIN)																
	2-Wire Coin 2-Way with Operator Screening (GA)			UEPCO	UEPGC	0.9019	10.05	7.36	1.37	1.28						
	2-Wire Coin 2-Way with Operator Screening and Blocking: 011, 900/976, 1+DDD (GA)			UEPCO	UEP2G	0.9019	10.05	7.36	1.37	1.28						
	2-Wire Coin 2-Way with Operator Screening and 011 Blocking (GA)			UEPCO	UEPGA	0.9019	10.05	7.36	1.37	1.28						
	2-Wire Coin 2-Way with Operator Screening and 900/976 Blocking (GA)			UEPCO	UEPGB	0.9019	10.05	7.36	1.37	1.28						
	2-Wire Coin 2-Way with Operator Screening and Blocking: 900/976, 1+DDD, 011+, and Local (GA)			UEPCO	UEPCH	0.9019	10.05	7.36	1.37	1.28						
	2-Wire Coin Outward with Operator Screening and 011 Blocking (GA, KY, MS)			UEPCO	UEPRJ	0.9019	10.05	7.36	1.37	1.28						
	2-Wire Coin Outward with Operator Screening and Blocking: 900/976, 1+DDD, 011+, and Local (FL, GA)			UEPCO	UEPCQ	0.9019	10.05	7.36	1.37	1.28						
	2-Wire 2-Way Smartline with 900/976 (all states except LA)			UEPCO	UEPCK	0.9019	10.05	7.36	1.37	1.28						
	2-Wire Coin Outward Smartline with 900/976 (all states except LA)			UEPCO	UEPCR	0.9019	10.05	7.36	1.37	1.28						
ADDITIONAL UNE COIN PORT/LOOP (RC)																
	UNE Coin Port/Loop Combo Usage (Flat Rate)			UEPCO	URECU	3.59	0.00	0.00	0.00	0.00						
LOCAL NUMBER PORTABILITY																
	Local Number Portability (1 per port)			UEPCO	LNPCX	0.35										
NONRECURRING CHARGES - CURRENTLY COMBINED																
	2-Wire Voice Grade Loop / Line Port Combination - Conversion - Switch-as-is			UEPCO	USAC2		0.10	0.10								
	2-Wire Voice Grade Loop / Line Port Combination - Conversion - Switch with change			UEPCO	USACC		0.10	0.10								
ADDITIONAL NRCs																
	2-Wire Voice Grade Loop/Line Port Combination - Subsequent Activity			UEPCO	USAS2		0.00	0.00								
	Unbundled Miscellaneous Rate Element, Tag Loop at End User Premise			UEPCO	URETL		8.33	0.83								
2-WIRE VOICE LOOP/ 2WIRE VOICE GRADE IO TRANSPORT/ 2-WIRE LINE PORT (RES)																

UNBUNDLED NETWORK ELEMENTS - Georgia														Attachment: 2		Exhibit: A	
CATEGORY	RATE ELEMENTS	Interim	Zone	BCS	USOC	RATES ($)					Svc Order Submitted Elec per LSR	Svc Order Submitted Manually per LSR	Incremental Charge - Manual Svc Order vs. Electronic-1st	Incremental Charge - Manual Svc Order vs. Electronic-Add'l	Incremental Charge - Manual Svc Order vs. Electronic-Disc 1st	Incremental Charge - Manual Svc Order vs. Electronic-Disc Add'l
						Rec	Nonrecurring		Nonrecurring Disconnect		OSS Rates ($)					
							First	Add'l	First	Add'l	SOMEC	SOMAN	SOMAN	SOMAN	SOMAN	SOMAN
	UNE Port/Loop Combination Rates															
	2-Wire VG Loop/IO Tranport/Port Combo - Zone 1		1			25.53										
	2-Wire VG Loop/IO Tranport/Port Combo - Zone 2		2			30.92										
	2-Wire VG Loop/IO Tranport/Port Combo - Zone 3		3			47.04										
	UNE Loop Rates															
	2-Wire Voice Grade Loop (SL2) - Zone 1		1	UEPFR	UECF2	11.57										
	2-Wire Voice Grade Loop (SL2) - Zone 2		2	UEPFR	UECF2	16.95										
	2-Wire Voice Grade Loop (SL2) - Zone 3		3	UEPFR	UECF2	33.08										
	2-Wire Voice Grade Line Port Rates (Res)															
	2-Wire voice unbundled port - residence			UEPFR	UEPRL	1.09	166.05	43.66	41.89	15.44						
	2-Wire voice unbundled port with Caller ID - res			UEPFR	UEPRC	1.09	166.05	43.66	41.89	15.44						
	2-Wire voice unbundled port outgoing only - res			UEPFR	UEPRO	1.09	166.05	43.66	41.89	15.44						
	2-Wire voice unbundles res, low usage line port with Caller ID (LUM)			UEPFR	UEPAP	1.09	166.05	43.66	41.89	15.44						
	2-Wire voice unbundled Georgia basic dialing port, without Caller ID capability - res			UEPFR	UEPWC	1.09	166.05	43.66	41.89	15.44						
	2-Wire voice unbundled Georgia basic dialing port for use with Caller ID - res			UEPFR	UEPWQ	1.09	166.05	43.66	41.89	15.44						
	2-Wire voice unbundled Georgia basic dialing port - outgoing only			UEPFR	UEPWR	1.09	166.05	43.66	41.89	15.44						
	INTEROFFICE TRANSPORT															
	Interoffice Transport - Dedicated - 2 Wire Voice Grade - Facility Termination			UEPFR	U1TV2	12.87	48.46	19.48	16.58	5.00						
	Interoffice Transport - Dedicated - 2 Wire Voice Grade - Per Mile or Fraction Mile			UEPFR	1L5XX	0.0057	0.00	0.00								
	FEATURES															
	All Features Offered			UEPFR	UEPVF	0.775	0.00	0.00								
	LOCAL NUMBER PORTABILITY															
	Local Number Portability (1 per port)			UEPFR	LNPCX	0.35										
	NONRECURRING CHARGES (NRCs) - CURRENTLY COMBINED															
	2-Wire Loop / Dedicated IO Transport / 2 Wire Line Port Combination - Conversion - Switch-as-is			UEPFR	USAC2		7.85	1.86								
	2-Wire Loop / Dedicated IO Transport / 2 Wire Line Port Combination - Conversion - Switch-With-Change			UEPFR	USACC		7.85	1.86								
	Unbundled Miscellaneous Rate Element, Tag Designed Loop at End User Premise			UEPFR	URETN		11.19	1.10								
	2-WIRE VOICE LOOP/ 2WIRE VOICE GRADE IO TRANSPORT/ 2-WIRE LINE PORT (BUS)															
	UNE Port/Loop Combination Rates															
	2-Wire VG Loop/IO Tranport/Port Combo - Zone 1		1			25.53										
	2-Wire VG Loop/IO Tranport/Port Combo - Zone 2		2			30.92										
	2-Wire VG Loop/IO Tranport/Port Combo - Zone 3		3			47.04										
	UNE Loop Rates															
	2-Wire Voice Grade Loop (SL2) - Zone 1		1	UEPFB	UECF2	11.57										
	2-Wire Voice Grade Loop (SL2) - Zone 2		2	UEPFB	UECF2	16.95										
	2-Wire Voice Grade Loop (SL2) - Zone 3		3	UEPFB	UECF2	33.08										
	2-Wire Voice Grade Line Port (Bus)															
	2-Wire voice unbundled port without Caller ID - bus			UEPFB	UEPBL	1.09	166.05	43.66	41.89	15.44						
	2-Wire voice unbundled port with Caller + E484 ID - bus			UEPFB	UEPBC	1.09	166.05	43.66	41.89	15.44						
	2-Wire voice unbundled port outgoing only - bus			UEPFB	UEPBO	1.09	166.05	43.66	41.89	15.44						
	2-Wire voice unbundled incoming only port with Caller ID - Bus			UEPFB	UEPB1	1.09	166.05	43.66	41.89	15.44						
	2-Wire voice unbundled Georgia basic dialing port, without Caller ID capability - bus			UEPFB	UEPWD	1.09	166.05	43.66	41.89	15.44						
	2-Wire voice unbundled Georgia basic dialing port for use with Caller ID - bus			UEPFB	UEPWP	1.09	166.05	43.66	41.89	15.44						
	LOCAL NUMBER PORTABILITY															
	Local Number Portability (1 per port)			UEPFB	LNPCX	0.35										
	INTEROFFICE TRANSPORT															
	Interoffice Transport - Dedicated - 2 Wire Voice Grade - Facility Termination			UEPFB	U1TV2	12.87	48.46	19.48	16.58	5.00						

UNBUNDLED NETWORK ELEMENTS - Georgia														Attachment: 2		Exhibit: A	
CATEGORY		RATE ELEMENTS	Interim	Zone	BCS	USOC	RATES ($)					Svc Order Submitted Elec per LSR	Svc Order Submitted Manually per LSR	Incremental Charge - Manual Svc Order vs. Electronic-1st	Incremental Charge - Manual Svc Order vs. Electronic-Add'l	Incremental Charge - Manual Svc Order vs. Electronic-Disc 1st	Incremental Charge - Manual Svc Order vs. Electronic-Disc Add'l
							Rec	Nonrecurring		Nonrecurring Disconnect		OSS Rates ($)					
								First	Add'l	First	Add'l	SOMEC	SOMAN	SOMAN	SOMAN	SOMAN	SOMAN
		Interoffice Transport - Dedicated - 2 Wire Voice Grade - Per Mile or Fraction Mile			UEPFB	1L5XX	0.0057	0.00	0.00								
	FEATURES																
		All Features Offered			UEPFB	UEPVF	0.775	0.00	0.00								
	NONRECURRING CHARGES (NRCs) - CURRENTLY COMBINED																
		2-Wire Loop / Dedicated IO Transport / 2 Wire Line Port Combination - Conversion - Switch-as-is			UEPFB	USAC2		7.85	1.86								
		2-Wire Loop / Dedicated IO Transport / 2 Wire Line Port Combination - Conversion - Switch with change			UEPFB	USACC		7.85	1.86								
		Unbundled Miscellaneous Rate Element, Tag Designed Loop at End User Premise			UEPFB	URETN		11.19	1.10								
	2-WIRE VOICE LOOP/ 2WIRE VOICE GRADE IO TRANSPORT/ 2-WIRE LINE PORT (PBX)																
	UNE Port/Loop Combination Rates																
		2-Wire VG Loop/IO Tranport/Port Combo - Zone 1		1			25.53										
		2-Wire VG Loop/IO Tranport/Port Combo - Zone 2		2			30.92										
		2-Wire VG Loop/IO Tranport/Port Combo - Zone 3		3			47.04										
	UNE Loop Rates																
		2-Wire Voice Grade Loop (SL2) - Zone 1		1	UEPFP	UECF2	11.57										
		2-Wire Voice Grade Loop (SL2) - Zone 2		2	UEPFP	UECF2	16.95										
		2-Wire Voice Grade Loop (SL2) - Zone 3		3	UEPFP	UECF2	33.08										
	2-Wire Voice Grade Line Port Rates (BUS - PBX)																
		Line Side Unbundled Combination 2-Way PBX Trunk Port - Bus			UEPFP	UEPPC	1.09	166.05	43.66	41.89	15.44						
		Line Side Unbundled Outward PBX Trunk Port - Bus			UEPFP	UEPPO	1.09	166.05	43.66	41.89	15.44						
		Line Side Unbundled Incoming PBX Trunk Port - Bus			UEPFP	UEPP1	1.09	166.05	43.66	41.89	15.44						
		2-Wire Voice Unbundled PBX LD Terminal Ports			UEPFP	UEPLD	1.09	166.05	43.66	41.89	15.44						
		2-Wire Voice Unbundled 2-Way Combination PBX Usage Port			UEPFP	UEPXA	1.09	166.05	43.66	41.89	15.44						
		2-Wire Voice Unbundled PBX Toll Terminal Hotel Ports			UEPFP	UEPXB	1.09	166.05	43.66	41.89	15.44						
		2-Wire Voice Unbundled PBX LD DDD Terminals Port			UEPFP	UEPXC	1.09	166.05	43.66	41.89	15.44						
		2-Wire Voice Unbundled PBX LD Terminal Switchboard Port			UEPFP	UEPXD	1.09	166.05	43.66	41.89	15.44						
		2-Wire Voice Unbundled PBX LD Terminal Switchboard IDD Capable Port			UEPFP	UEPXE	1.09	166.05	43.66	41.89	15.44						
		2-Wire Voice Unbundled 2-Way PBX Hotel/Hospital Economy Administrative Calling Port			UEPFP	UEPXL	1.09	166.05	43.66	41.89	15.44						
		2-Wire Voice Unbundled 2-Way PBX Hotel/Hospital Economy Room Calling Port			UEPFP	UEPXM	1.09	166.05	43.66	41.89	15.44						
		2-Wire Voice Unbundled 1-Way Outgoing PBX Hotel/Hospital Discount Room Calling Port			UEPFP	UEPXO	1.09	166.05	43.66	41.89	15.44						
		2-Wire Voice Unbundled 1-Way Outgoing PBX Measured Port			UEPFP	UEPXS	1.09	166.05	43.66	41.89	15.44						
		2-Wire voice unbundled Georgia basic dialing port - 1-Way Oudial Trunk			UEPFP	UEPWS	1.09	166.05	43.66	41.89	15.44						
		2-Wire voice unbundled Georgia basic dialing port - 2-Way Trunk			UEPFP	UEPWT	1.09	166.05	43.66	41.89	15.44						
	LOCAL NUMBER PORTABILITY																
		Local Number Portability (1 per port)			UEPFP	LNPCP	3.15	0.00	0.00								
	INTEROFFICE TRANSPORT																
		Interoffice Transport - Dedicated - 2 Wire Voice Grade - Facility Termination			UEPFP	U1TV2	12.87	48.46	19.48	16.58	5.00						
		Interoffice Transport - Dedicated - 2 Wire Voice Grade - Per Mile or Fraction Mile			UEPFP	1L5XX	0.0057	0.00	0.00								
	FEATURES																
		All Features Offered			UEPFP	UEPVF	0.775	0.00	0.00								
	NONRECURRING CHARGES (NRCs) - CURRENTLY COMBINED																
		2-Wire Loop / Dedicated IO Transport / 2 Wire Line Port Combination - Conversion - Switch-as-is			UEPFP	USAC2		7.85	1.86								
		2-Wire Loop / Dedicated IO Transport / 2 Wire Line Port Combination - Conversion - Switch with change			UEPFP	USACC		7.85	1.86								
		Unbundled Miscellaneous Rate Element, Tag Designed Loop at End User Premise			UEPFP	URETN		11.19	1.10								

UNBUNDLED NETWORK ELEMENTS - Georgia														Attachment: 2		Exhibit: A	
CATEGORY	RATE ELEMENTS	Interim	Zone	BCS	USOC	RATES ($)					Svc Order Submitted Elec per LSR	Svc Order Submitted Manually per LSR	Incremental Charge - Manual Svc Order vs. Electronic-1st	Incremental Charge - Manual Svc Order vs. Electronic-Add'l	Incremental Charge - Manual Svc Order vs. Electronic-Disc 1st	Incremental Charge - Manual Svc Order vs. Electronic-Disc Add'l
						Rec	Nonrecurring		Nonrecurring Disconnect		OSS Rates ($)					
							First	Add'l	First	Add'l	SOMEC	SOMAN	SOMAN	SOMAN	SOMAN	SOMAN
UNBUNDLED PORT/LOOP COMBINATIONS - COST BASED RATES																
2-WIRE VOICE GRADE LOOP- BUS ONLY - WITH 2-WIRE DID TRUNK PORT																
UNE Port/Loop Combination Rates																
	2-Wire VG Loop/2-Wire DID Trunk Port Combo - UNE Zone 1		1			17.05										
	2-Wire VG Loop/2-Wire DID Trunk Port Combo - UNE Zone 2		2			22.44										
	2-Wire VG Loop/2-Wire DID Trunk Port Combo - UNE Zone 3		3			38.56										
UNE Loop Rates																
	2-Wire Analog Voice Grade Loop - (SL2) - UNE Zone 1		1	UEPPX	UECD1	11.57										
	2-Wire Analog Voice Grade Loop - (SL2) - UNE Zone 2		2	UEPPX	UECD1	16.95										
	2-Wire Analog Voice Grade Loop - (SL2) - UNE Zone 3		3	UEPPX	UECD1	33.08										
UNE Port Rate																
	Exchange Ports - 2-Wire DID Port			UEPPX	UEPD1	5.48	174.55	13.64	59.31	4.27						
NONRECURRING CHARGES - CURRENTLY COMBINED																
	2-Wire Voice Grade Loop / 2-Wire DID Trunk Port Combination - Switch-as-is			UEPPX	USAC1		6.66	1.86								
	2-Wire Voice Grade Loop / 2-Wire DID Trunk Port Conversion with BellSouth Allowable Changes			UEPPX	USA1C		6.66	1.86								
ADDITIONAL NRCs																
	Unbundled Miscellaneous Rate Element, Tag Designed Loop at End User Premise			UEPPX	URETN		11.19	1.10								
Telephone Number/Trunk Group Establisment Charges																
	DID Trunk Termination (One Per Port)			UEPPX	NDT	0.00	0.00	0.00								
	DID Numbers, Establish Trunk Group and Provide First Group of 20 DID Numbers			UEPPX	NDZ	0.00	0.00	0.00								
	Additional DID Numbers for each Group of 20 DID Numbers			UEPPX	ND4	0.00	0.00	0.00								
	DID Numbers, Non- consecutive DID Numbers , Per Number			UEPPX	ND5	0.00	0.00	0.00								
	Reserve Non-Consecutive DID numbers			UEPPX	ND6	0.00	0.00	0.00								
	Reserve DID Numbers			UEPPX	NDV	0.00	0.00	0.00								
LOCAL NUMBER PORTABILITY																
	Local Number Portability (1 per port)			UEPPX	LNPCP	3.15	0.00	0.00								
2-WIRE ISDN DIGITAL GRADE LOOP WITH 2-WIRE ISDN DIGITAL LINE SIDE PORT																
UNE Port/Loop Combination Rates																
	2W ISDN Digital Grade Loop/2W ISDN Digital Line Side Port - UNE Zone 1		1	UEPPB UEPPR		19.44										
	2W ISDN Digital Grade Loop/2W ISDN Digital Line Side Port - UNE Zone 2		2	UEPPB UEPPR		24.45										
	2W ISDN Digital Grade Loop/2W ISDN Digital Line Side Port - UNE Zone 3		3	UEPPB UEPPR		38.09										
UNE Loop Rates																
	2-Wire ISDN Digital Grade Loop - UNE Zone 1		1	UEPPB UEPPR	USL2X	14.25										
	2-Wire ISDN Digital Grade Loop - UNE Zone 2		2	UEPPB UEPPR	USL2X	19.26										
	2-Wire ISDN Digital Grade Loop - UNE Zone 3		3	UEPPB UEPPR	USL2X	32.90										
UNE Port Rate																
	Exchange Port - 2-Wire ISDN Line Side Port			UEPPB UEPPR	UEPPB	5.19	161.36	141.68	43.68	8.37						
NONRECURRING CHARGES - CURRENTLY COMBINED																
	2-Wire ISDN Digital Grade Loop / 2-Wire ISDN Line Side Port Combination - Conversion			UEPPB UEPPR	USACB	0.00	42.52	26.99								
ADDITIONAL NRCs																
	2-Wire ISDN Loop / 2-Wire ISDN Port Combination - Sub Actvy Non Feature/Add Trunk			UEPPB UEPPR	USASB		0.00									
	Unbundled Miscellaneous Rate Element, Tag Designed Loop at End User Premise			UEPPB UEPPR	URETN		11.19	1.10								
	Unbundled Miscellaneous Rate Element, Tag Loop at End User Premise			UEPPB UEPPR	URETL		8.33	0.83								
LOCAL NUMBER PORTABILITY																
	Local Number Portability (1 per port)			UEPPB UEPPR	LNPCX	0.35	0.00	0.00								
B-CHANNEL USER PROFILE ACCESS:																
	CVS/CSD (DMS/5ESS)			UEPPB UEPPR	U1UCA	0.00	0.00	0.00								

UNBUNDLED NETWORK ELEMENTS - Georgia														Attachment: 2		Exhibit: A	
CATEGORY	RATE ELEMENTS	Interim	Zone	BCS	USOC	RATES ($)					Svc Order Submitted Elec per LSR	Svc Order Submitted Manually per LSR	Incremental Charge - Manual Svc Order vs. Electronic-1st	Incremental Charge - Manual Svc Order vs. Electronic-Add'l	Incremental Charge - Manual Svc Order vs. Electronic-Disc 1st	Incremental Charge - Manual Svc Order vs. Electronic-Disc Add'l
						Rec	Nonrecurring		Nonrecurring Disconnect		OSS Rates ($)					
							First	Add'l	First	Add'l	SOMEC	SOMAN	SOMAN	SOMAN	SOMAN	SOMAN
	CVS (EWSD)			UEPPB UEPPR	U1UCB	0.00	0.00	0.00								
	CSD			UEPPB UEPPR	U1UCC	0.00	0.00	0.00								
B-CHANNEL AREA PLUS USER PROFILE ACCESS: (AL,KY,LA,MS SC,MS, & TN)																
USER TERMINAL PROFILE																
	User Terminal Profile (EWSD only)			UEPPB UEPPR	U1UMA	0.00	0.00	0.00								
VERTICAL FEATURES																
	All Vertical Features - One per Channel B User Profile			UEPPB UEPPR	UEPVF	0.775	0.00	0.00								
INTEROFFICE CHANNEL MILEAGE																
	Interoffice Channel mileage each, including first mile and facilities termination			UEPPB UEPPR	M1GNC	12.8757	48.46	19.48	16.58	5.00						
	Interoffice Channel mileage each, additional mile			UEPPB UEPPR	M1GNM	0.0057	0.00	0.00								
4-WIRE DS1 DIGITAL LOOP WITH 4-WIRE ISDN DS1 DIGITAL TRUNK PORT																
The UNE-P DS1 combination rates below for in this rate exhibit apply to the embedded base in place as of 10/2/03 until 4/1/04. After 4/1/04 these rates shall revert to tariff rates or a separate commercial agreement.																
Requests for 4-Wire DS1 Digital Loop with 4-Wire ISDN DS1 Digital Trunk Port after the effective date of this amendment shall be provided pursuant to a separate agreement or tariff at BellSouth's discretion.																
UNE Port/Loop Combination Rates																
	4W DS1 Digital Loop/4W ISDN DS1 Digital Trunk Port - UNE Zone 1		1	UEPPP		106.15										
	4W DS1 Digital Loop/4W ISDN DS1 Digital Trunk Port - UNE Zone 2		2	UEPPP		111.54										
	4W DS1 Digital Loop/4W ISDN DS1 Digital Trunk Port - UNE Zone 3		3	UEPPP		127.15										
UNE Loop Rates																
	4-Wire DS1 Digital Loop - UNE Zone 1		1	UEPPP	USL4P	41.02										
	4-Wire DS1 Digital Loop - UNE Zone 2		2	UEPPP	USL4P	46.41										
	4-Wire DS1 Digital Loop - UNE Zone 3		3	UEPPP	USL4P	62.03										
UNE Port Rate																
	Exchange Ports - 4-Wire ISDN DS1 Port (E:4/1/2004)			UEPPP	UEPPP	65.13	365.73	187.42	73.41	21.80						
NONRECURRING CHARGES - CURRENTLY COMBINED																
	4-Wire DS1 Digital Loop / 4-Wire ISDN DS1 Digital Trunk Port Combination - Conversion -Switch-as-is (E:4/1/2004)			UEPPP	USACP	0.00	122.56	77.97								
ADDITIONAL NRCs																
	4-Wire DS1 Loop/4-W ISDN Digtl Trk Port - Subsqt Actvy-Inward/two way Tel Nos. (except NC)			UEPPP	PR7TF		0.50									
	4-Wire DS1 Loop / 4-Wire ISDN DS1 Digital Trunk Port - Outward Tel Numbers (All States except NC)			UEPPP	PR7TO		10.72									
	4-Wire DS1 Loop / 4-Wire ISDN DS1 Digital Trk Port - Subsequent Inward Tel Numbers			UEPPP	PR7ZT		21.43									
LOCAL NUMBER PORTABILITY																
	Local Number Portability (1 per port)			UEPPP	LNPCN	1.75										
INTERFACE (Provsioning Only)																
	Voice/Data			UEPPP	PR71V	0.00	0.00	0.00								
	Digital Data			UEPPP	PR71D	0.00	0.00	0.00								
	Inward Data			UEPPP	PR71E	0.00	0.00	0.00								
New or Additional "B" Channel																
	New or Additional - Voice/Data B Channel			UEPPP	PR7BV	0.00	13.59									
	New or Additional - Digital Data B Channel			UEPPP	PR7BF	0.00	13.59									
	New or Additional Inward Data B Channel			UEPPP	PR7BD	0.00	13.59									
CALL TYPES																
	Inward			UEPPP	PR7C1	0.00	0.00	0.00								
	Outward			UEPPP	PR7CO	0.00	0.00	0.00								
	Two-way			UEPPP	PR7CC	0.00	0.00	0.00								
Interoffice Channel Mileage																
	Fixed Each Including First Mile			UEPPP	1LN1A	34.31	111.03	80.28	31.36	21.73						
	Each Airline-Fractional Additional Mile			UEPPP	1LN1B	0.1154										
4-WIRE DS1 DIGITAL LOOP WITH 4-WIRE DDITS TRUNK PORT																
The UNE-P DS1 combination rates below for in this rate exhibit apply to the embedded base in place as of 10/2/03 until 4/1/04. After 4/1/04 these rates shall revert to tariff rates or a separate commercial agreement.																
Requests for 4-Wire DS1 Digital Loop with 4-Wire DDITS after the effective date of this amendment shall be provided pursuant to a separate agreement or tariff at BellSouth's discretion.																
UNE Port/Loop Combination Rates																
	4W DS1 Digital Loop/4W DDITS Trunk Port - UNE Zone 1		1	UEPDC		82.22										

UNBUNDLED NETWORK ELEMENTS - Georgia														Attachment: 2		Exhibit: A	
CATEGORY	RATE ELEMENTS	Interim	Zone	BCS	USOC	RATES ($)					Svc Order Submitted Elec per LSR	Svc Order Submitted Manually per LSR	Incremental Charge - Manual Svc Order vs. Electronic-1st	Incremental Charge - Manual Svc Order vs. Electronic-Add'l	Incremental Charge - Manual Svc Order vs. Electronic-Disc 1st	Incremental Charge - Manual Svc Order vs. Electronic-Disc Add'l
						Rec	Nonrecurring		Nonrecurring Disconnect		OSS Rates ($)					
							First	Add'l	First	Add'l	SOMEC	SOMAN	SOMAN	SOMAN	SOMAN	SOMAN
	4W DS1 Digital Loop/4W DDITS Trunk Port - UNE Zone 2		2	UEPDC		87.61										
	4W DS1 Digital Loop/4W DDITS Trunk Port - UNE Zone 3		3	UEPDC		103.22										
UNE Loop Rates																
	4-Wire DS1 Digital Loop - UNE Zone 1		1	UEPDC	USLDC	41.02										
	4-Wire DS1 Digital Loop - UNE Zone 2		2	UEPDC	USLDC	46.41										
	4-Wire DS1 Digital Loop - UNE Zone 3		3	UEPDC	USLDC	62.03										
UNE Port Rate																
	4-Wire DDITS Digital Trunk Port (E:4/1/2004)			UEPDC	UDD1T	41.20	392.25	185.06	80.17	7.86						
NONRECURRING CHARGES - CURRENTLY COMBINED																
	4-Wire DS1 Digital Loop / 4-Wire DDITS Trunk Port Combination - Switch-as-is (E:4/1/2004)			UEPDC	USAC4		132.19	66.79								
	4-Wire DS1 Digital Loop / 4-Wire DDITS Trunk Port Combination - Conversion with DS1 Changes (E:4/1/2004)			UEPDC	USAWA		132.19	66.79								
	4-Wire DS1 Digital Loop / 4-Wire DDITS Trunk Port Combination - Conversion with Change - Trunk (E:4/1/2004)			UEPDC	USAWB		132.19	66.79								
ADDITIONAL NRCs																
	4-Wire DS1 Loop / 4-Wire DDITS Trunk Port - Subsequent Service Activity Per Service Order			UEPDC	USAS4		0.00	0.00								
	4-Wire DS1 Loop / 4-Wire DDITS Trunk Port - NRC - Subsequent Channel Activation/Chan - 2-Way Trunk			UEPDC	UDTTA		13.95	13.95								
	4-Wire DS1 Loop / 4-Wire DDITS Trunk Port - Subsequent Channel Activation/Chan - 1-Way Outward Trunk			UEPDC	UDTTB		13.95	13.95								
	4-Wire DS1 Loop / 4-Wire DDITS Trunk Port - Subsqnt Channel Activation/Chan Inward Trunk w/out DID			UEPDC	UDTTC		13.95	13.95								
	4-Wire DS1 Loop / 4-Wire DDITS Trunk Port - Subsqnt Chan Activation Per Chan - Inward Trunk with DID			UEPDC	UDTTD		13.95	13.95								
	4-Wire DS1 Loop / 4-Wire DDITS Trunk Port - Subsqnt Chan Activation / Chan - 2-Way DID w User Trans			UEPDC	UDTTE		13.95	13.95								
BIPOLAR 8 ZERO SUBSTITUTION																
	B8ZS -Superframe Format			UEPDC	CCOSF		0.00i	392.25s								
	B8ZS - Extended Superframe Format			UEPDC	CCOEF		0.00i	392.25s								
Alternate Mark Inversion																
	AMI -Superframe Format			UEPDC	MCOSF		0.00	0.00								
	AMI - Extended SuperFrame Format			UEPDC	MCOPO		0.00	0.00								
Telephone Number/Trunk Group Establisment Charges																
	Telephone Number for 2-Way Trunk Group			UEPDC	UDTGX	0.00										
	Telephone Number for 1-Way Outward Trunk Group			UEPDC	UDTGY	0.00										
	Telephone Number for 1-Way Inward Trunk Group Without DID			UEPDC	UDTGZ	0.00										
	DID Numbers, Establish Trunk Group and Provide First Group of 20 DID Numbers			UEPDC	NDZ	0.00	0.00	0.00								
	DID Numbers for each Group of 20 DID Numbers			UEPDC	ND4	0.00										
	DID Numbers, Non- consecutive DID Numbers , Per Number			UEPDC	ND5	0.00										
	Reserve Non-Consecutive DID Nos.			UEPDC	ND6	0.00	0.00	0.00								
	Reserve DID Numbers			UEPDC	NDV	0.00	0.00	0.00								
Dedicated DS1 (Interoffice Channel Mileage) - FX/FCO for 4-Wire DS1 Digital Loop with 4-Wire DDITS Trunk Port																
	Interoffice Channel Mileage - Fixed rate 0-8 miles (Facilities Termination)			UEPDC	1LNO1	34.19	111.03	80.28	31.36	21.73						
	Interoffice Channel Mileage - Additional rate per mile - 0-8 miles			UEPDC	1LNOA	0.1154	0.00	0.00								
	Interoffice Channel Mileage - Fixed rate 9-25 miles (Facilities Termination)			UEPDC	1LNO2	0.00	0.00	0.00								
	Interoffice Channel Mileage - Additional rate per mile - 9-25 miles			UEPDC	1LNOB	0.1154	0.00	0.00								
	Interoffice Channel Mileage - Fixed rate 25+ miles (Facilities Termination)			UEPDC	1LNO3	0.00	0.00	0.00								
	Interoffice Channel Mileage - Additional rate per mile - 25+ miles			UEPDC	1LNOC	0.1154	0.00	0.00								
	Local Number Portability, per DS0 Activated			UEPDC	LNPCP	3.15										
	Central Office Termininating Point			UEPDC	CTG	0.00										

UNBUNDLED NETWORK ELEMENTS - Georgia													Attachment: 2		Exhibit: A	
CATEGORY	RATE ELEMENTS	Interim	Zone	BCS	USOC	RATES ($)					Svc Order Submitted Elec per LSR	Svc Order Submitted Manually per LSR	Incremental Charge - Manual Svc Order vs. Electronic-1st	Incremental Charge - Manual Svc Order vs. Electronic-Add'l	Incremental Charge - Manual Svc Order vs. Electronic-Disc 1st	Incremental Charge - Manual Svc Order vs. Electronic-Disc Add'l
						Rec	Nonrecurring		Nonrecurring Disconnect		OSS Rates ($)					
							First	Add'l	First	Add'l	SOMEC	SOMAN	SOMAN	SOMAN	SOMAN	SOMAN
	4-WIRE DS1 LOOP WITH CHANNELIZATION WITH PORT															
	System is 1 DS1 Loop, 1 D4 Channel Bank, and up to 24 Feature Activations															
	Each System can have up to 24 combinations of rates depending on type and number of ports used															
	The UNE-P DS1 combination rates below for 4-Wire DS1 Loop with Channelization with Port in this rate exhibit apply to the embedded base in place as of 10/2/03 until 4/1/04. After 4/1/04 these rates shall revert to tariff rates or a separate agreement.															
	Requests for 4-Wire DS1 Loop with Channelization with Port after the effective date of this amendment shall be provided pursuant to a separate agreement or tariff at BellSouth's discretion.															
	UNE DS1 Loop															
	4-Wire DS1 Loop - UNE Zone 1		1	UEPMG	USLDC	41.02	0.00	0.00								
	4-Wire DS1 Loop - UNE Zone 2		2	UEPMG	USLDC	46.41	0.00	0.00								
	4-Wire DS1 Loop - UNE Zone 3		3	UEPMG	USLDC	62.03	0.00	0.00								
	UNE DSO Channelization Capacities (D4 Channel Bank Configurations)															
	24 DSO Channel Capacity - 1 per DS1			UEPMG	VUM24	43.04	0.00	0.00								
	48 DSO Channel Capacity - 1 per 2 DS1s			UEPMG	VUM48	86.06	0.00	0.00								
	96 DSO Channel Capacity -1per 4 DS1s			UEPMG	VUM96	172.16	0.00	0.00								
	144 DS0 Channel Capacity - 1 per 6 DS1s			UEPMG	VUM14	258.24	0.00	0.00								
	192 DS0 Channel Capacity -1 per 8 DS1s			UEPMG	VUM19	344.32	0.00	0.00								
	240 DS0 Channel Capacity - 1 per 10 DS1s			UEPMG	VUM2O	430.40	0.00	0.00								
	288 DS0 Channel Capacity - 1 per 12 DS1s			UEPMG	VUM28	516.48	0.00	0.00								
	384 DS0 Channel Capacity - 1 per 16 DS1s			UEPMG	VUM38	688.64	0.00	0.00								
	480 DS0 Channel Capacity - 1 per 20 DS1s			UEPMG	VUM4O	860.80	0.00	0.00								
	576 DS0 Channel Capacity -1 per 24 DS1s			UEPMG	VUM57	1,032.96	0.00	0.00								
	672 DS0 Channel Capacity - 1 per 28 DS1s			UEPMG	VUM67	1,205.12	0.00	0.00								
	Non-Recurring Charges (NRC) Associated with 4-Wire DS1 Loop with Channeliztion with Port - Conversion Charge Based on a System															
	A Minimum System configuration is One (1) DS1, One (1) D4 Channel Bank, and Up To 24 DSO Ports with Feature Activations.															
	Multiples of this configuration functioning as one are considered Add'l after the minimum system configuration is counted.															
	NRC - Conversion (Currently Combined) with or without BellSouth Allowed Changes			UEPMG	USAC4	0.00	153.24	8.37								
	System Additions at End User Locations Where 4-Wire DS1 Loop with Channelization with Port Combination Currently Exists and															
	New (Not Currently Combined) in all states, except in Density Zone 1 of Top 8 MSA's															
	1 DS1/D4 Channel Bank - Additionally Add NRC for each Port and Assoc Fea Activation (E:4/1/2004)			UEPMG	VUMD4	0.00	379.04	253.97	69.43	8.35						
	Bipolar 8 Zero Substitution															
	Clear Channel Capability Format, superframe - Subsequent Activity Only			UEPMG	CCOSF	0.00	0.00i	392.25s								
	Clear Channel Capability Format - Extended Superframe - Subsequent Activity Only			UEPMG	CCOEF	0.00	0.00i	392.25s								
	Alternate Mark Inversion (AMI)															
	Superframe Format			UEPMG	MCOSF	0.00	0.00	0.00								
	Extended Superframe Format			UEPMG	MCOPO	0.00	0.00	0.00								
	Exchange Ports Associated with 4-Wire DS1 Loop with Channelization with Port															
	Exchange Ports															
	Line Side Combination Channelized PBX Trunk Port - Business (E:4/1/2004)			UEPPX	UEPCX	1.09	0.00	0.00	0.00	0.00						
	Line Side Outward Channelized PBX Trunk Port - Business (E:4/1/2004)			UEPPX	UEPOX	1.09	0.00	0.00	0.00	0.00						
	Line Side Inward Only Channelized PBX Trunk Port without DID (E:4/1/2004)			UEPPX	UEP1X	1.09	0.00	0.00	0.00	0.00						
	2-Wire Trunk Side Unbundled Channelized DID Trunk Port (E:4/1/2004)			UEPPX	UEPDM	5.50	0.00	0.00	0.00	0.00						
	Feature Activations - Unbundled Loop Concentration															
	Feature (Service) Activation for each Line Port Terminated in D4 Bank			UEPPX	1PQWM	0.4689	12.90	6.80	1.96	1.95						
	Feature (Service) Activation for each Trunk Port Terminated in D4 Bank			UEPPX	1PQWU	0.4689	38.09	9.18	26.77	5.34						
	Telephone Number/ Group Establishment Charges for DID Service															
	DID Trunk Termination (1 per Port)			UEPPX	NDT	0.00	0.00	0.00								
	Estab Trk Grp and Provide 1st 20 DID Nos. (FL,GA, NC,& SC)			UEPPX	NDZ	0.00	0.00	0.00								
	DID Numbers - groups of 20 - Valid all States			UEPPX	ND4	0.00	0.00	0.00								
	Non-Consecutive DID Numbers - per number			UEPPX	ND5	0.00	0.00	0.00								
	Reserve Non-Consecutive DID Numbers			UEPPX	ND6	0.00	0.00	0.00								

UNBUNDLED NETWORK ELEMENTS - Georgia														Attachment: 2		Exhibit: A	
CATEGORY	RATE ELEMENTS	Interim	Zone	BCS	USOC	RATES ($)					Svc Order Submitted Elec per LSR	Svc Order Submitted Manually per LSR	Incremental Charge - Manual Svc Order vs. Electronic-1st	Incremental Charge - Manual Svc Order vs. Electronic-Add'l	Incremental Charge - Manual Svc Order vs. Electronic-Disc 1st	Incremental Charge - Manual Svc Order vs. Electronic-Disc Add'l
						Rec	Nonrecurring		Nonrecurring Disconnect		OSS Rates ($)					
							First	Add'l	First	Add'l	SOMEC	SOMAN	SOMAN	SOMAN	SOMAN	SOMAN
	Reserve DID Numbers			UEPPX	NDV	0.00	0.00	0.00								
Local Number Portability																
	Local Number Portability - 1 per port			UEPPX	LNPCP	3.15	0.00	0.00								
FEATURES - Vertical and Optional																
Local Switching Features Offered with Line Side Ports Only																
	All Features Available			UEPPX	UEPVF	0.775	0.00	0.00								
UNBUNDLED CENTREX PORT/LOOP COMBINATIONS - COST BASED RATES																
1. Cost Based Rates are applied where BellSouth is required by FCC and/or State Commission rule to provide Unbundled Local Switching or Switch Ports.																
2. Features shall apply to the Unbundled Port/Loop Combination - Cost Based Rate section in the same manner as they are applied to the Stand-Alone Unbundled Port section of this Rate Exhibit.																
3. End Office and Tandem Switching Usage and Common Transport Usage rates in the Port section of this rate exhibit shall apply to all combinations of loop/port network elements except for UNE Coin Port/Loop Combinations.																
4. The first and additional Port nonrecurring charges apply to Not Currently Combined Combos. For Currently Combined Combos, the nonrecurring charges shall be those identified in the Nonrecurring - Currently Combined sections. Additional NRCs may apply also and are categorized accordingly.																
5. Market Rates for Unbundled Centrex Port/Loop Combination will be negotiated on an Individual Case Basis, until further notice.																
UNE-P CENTREX - 1AESS - (Valid in AL,FL,GA,KY,LA,MS,&TN only)																
2-Wire VG Loop/2-Wire Voice Grade Port (Centrex) Combo																
UNE Port/Loop Combination Rates (Non-Design)																
	2-Wire VG Loop/2-Wire Voice Grade Port (Centrex) Port Combo - Non-Design		1	UEP91		10.46										
	2-Wire VG Loop/2-Wire Voice Grade Port (Centrex)Port Combo - Non-Design		2	UEP91		15.76										
	2-Wire VG Loop/2-Wire Voice Grade Port (Centrex)Port Combo - Non-Design		3	UEP91		32.56										
UNE Port/Loop Combination Rates (Design)																
	2-Wire VG Loop/2-Wire Voice Grade Port (Centrex) Port Combo - Design		1	UEP91		12.47										
	2-Wire VG Loop/2-Wire Voice Grade Port (Centrex)Port Combo - Design		2	UEP91		17.85										
	2-Wire VG Loop/2-Wire Voice Grade Port (Centrex)Port Combo - Design		3	UEP91		33.98										
UNE Loop Rate																
	2-Wire Voice Grade Loop (SL 1) - Zone 1		1	UEP91	UECS1	9.56										
	2-Wire Voice Grade Loop (SL 1) - Zone 2		2	UEP91	UECS1	14.86										
	2-Wire Voice Grade Loop (SL 1) - Zone 3		3	UEP91	UECS1	31.66										
	2-Wire Voice Grade Loop (SL 2) - Zone 1		1	UEP91	UECS2	11.57										
	2-Wire Voice Grade Loop (SL 2) - Zone 2		2	UEP91	UECS2	16.95										
	2-Wire Voice Grade Loop (SL 2) - Zone 3		3	UEP91	UECS2	33.08										
UNE Ports																
All States (Except North Carolina and Sout Carolina)																
	2-Wire Voice Grade Port (Centrex) Basic Local Area			UEP91	UEPYA	0.9019	10.05	7.36	1.37	1.28						
	2-Wire Voice Grade Port (Centrex 800 termination)Basic Local Area			UEP91	UEPYB	0.9019	10.05	7.36	1.37	1.28						
	2-Wire Voice Grade Port (Centrex with Caller ID)Note1 Basic Local Area			UEP91	UEPYH	0.9019	10.05	7.36	1.37	1.28						
	2-Wire Voice Grade Port (Centrex from diff Serving Wire Center) Note 2, 3 Basic Local Area			UEP91	UEPYM	0.9019	82.27	26.96	20.29	9.15						
	2-Wire Voice Grade Port, Diff Serving Wire Center - 800 Service Term - Basic Local Area			UEP91	UEPYZ	0.9019	82.27	26.96	20.29	9.15						
	2-Wire Voice Grade Port terminated in on Megalink or equivalent - Basic Local Area			UEP91	UEPY9	0.9019	10.05	7.36	1.37	1.28						
	2-Wire Voice Grade Port Terminated on 800 Service Term - Basic Local Area			UEP91	UEPY2	0.9019	10.05	7.36	1.37	1.28						
Georgia and Florida Only																
	2-Wire Voice Grade Port (Centrex)			UEP91	UEPHA	0.9019	10.05	7.36	1.37	1.28						
	2-Wire Voice Grade Port (Centrex 800 termination)			UEP91	UEPHB	0.9019	10.05	7.36	1.37	1.28						
	2-Wire Voice Grade Port (Centrex with Caller ID)1			UEP91	UEPHH	0.9019	10.05	7.36	1.37	1.28						
	2-Wire Voice Grade Port (Centrex from diff Serving Wire Center)2,3			UEP91	UEPHM	0.9019	82.27	26.96	20.29	9.15						
	2-Wire Voice Grade Port, Diff Serving Wire Center 2,3 - 800 Service Term			UEP91	UEPHZ	0.9019	82.27	26.96	20.29	9.15						

UNBUNDLED NETWORK ELEMENTS - Georgia														Attachment: 2		Exhibit: A	
CATEGORY	RATE ELEMENTS	Interim	Zone	BCS	USOC	RATES ($)					Svc Order Submitted Elec per LSR	Svc Order Submitted Manually per LSR	Incremental Charge - Manual Svc Order vs. Electronic-1st	Incremental Charge - Manual Svc Order vs. Electronic-Add'l	Incremental Charge - Manual Svc Order vs. Electronic-Disc 1st	Incremental Charge - Manual Svc Order vs. Electronic-Disc Add'l
						Rec	Nonrecurring		Nonrecurring Disconnect		OSS Rates ($)					
							First	Add'l	First	Add'l	SOMEC	SOMAN	SOMAN	SOMAN	SOMAN	SOMAN
	2-Wire Voice Grade Port terminated in on Megalink or equivalent			UEP91	UEPH9	0.9019	10.05	7.36	1.37	1.28						
	2-Wire Voice Grade Port Terminated on 800 Service Term			UEP91	UEPH2	0.9019	10.05	7.36	1.37	1.28						
Local Switching																
	Centrex Intercom Funtionality, per port			UEP91	URECS	0.4237										
Local Number Portability																
	Local Number Portability (1 per port)			UEP91	LNPCC	0.35										
Features																
	All Standard Features Offered, per port			UEP91	UEPVF	0.775										
	All Select Features Offered, per port			UEP91	UEPVS	0.00	0.00									
	All Centrex Control Features Offered, per port			UEP91	UEPVC	0.00										
NARS																
	Unbundled Network Access Register - Combination			UEP91	UARCX	0.00	0.00	0.00	0.00	0.00						
	Unbundled Network Access Register - Indial			UEP91	UAR1X	0.00	0.00	0.00	0.00	0.00						
	Unbundled Network Access Register - Outdial			UEP91	UAROX	0.00	0.00	0.00	0.00	0.00						
Miscellaneous Terminations																
2-Wire Trunk Side																
	Trunk Side Terminations, each			UEP91	CENA6	5.50	122.26	18.65	54.82	3.45						
Interoffice Channel Mileage - 2-Wire																
	Interoffice Channel Facilities Termination - Voice Grade			UEP91	M1GBC	12.87	48.46	19.48	16.58	5.00						
	Interoffice Channel mileage, per mile or fraction of mile			UEP91	M1GBM	0.0057										
Feature Activations (DS0) Centrex Loops on Channelized DS1 Service																
D4 Channel Bank Feature Activations																
	Feature Activation on D-4 Channel Bank Centrex Loop Slot			UEP91	1PQWS	0.4689										
	Feature Activation on D-4 Channel Bank FX line Side Loop Slot			UEP91	1PQW6	0.4689										
	Feature Activation on D-4 Channel Bank FX Trunk Side Loop Slot			UEP91	1PQW7	0.4689										
	Feature Activation on D-4 Channel Bank Centrex Loop Slot - Different Wire Center			UEP91	1PQWP	0.4689										
	Feature Activation on D-4 Channel Bank Private Line Loop Slot			UEP91	1PQWV	0.4689										
	Feature Activation on D-4 Channel Bank Tjie Line/Trunk Loop Slot			UEP91	1PQWQ	0.4689										
	Feature Activation on D-4 Channel Bank WATS Loop Slot			UEP91	1PQWA	0.4689										
Non-Recurring Charges (NRC) Associated with UNE-P Centrex																
	Conversion - Currently Combined Switch-As-Is with allowed changes, per port			UEP91	USAC2		0.10	0.10								
	New Centrex Standard Common Block			UEP91	M1ACS	0.00	317.90	37.59	48.99	5.92						
	New Centrex Customized Common Block			UEP91	M1ACC	0.00	317.90	37.59	48.99	5.92						
	Secondary Block, per Block			UEP91	M2CC1	0.00	77.10									
	NAR Establishment Charge, Per Occasion			UEP91	URECA	0.00	0.00									
Additional Non-Recurring Charges (NRC)																
	Unbundled Miscellaneous Rate Element, Tag Loop at End Use Premise			UEP91	URETL		8.33	0.83								
	Unbundled Miscellaneous Rate Element, Tag Design Loop at End Use Premise			UEP91	URETN		11.19	1.10								
UNE-P CENTREX - 5ESS (Valid in All States)																
2-Wire VG Loop/2-Wire Voice Grade Port (Centrex) Combo																
UNE Port/Loop Combination Rates (Non-Design)																
	2-Wire VG Loop/2-Wire Voice Grade Port (Centrex) Port Combo - Non-Design		1	UEP95		10.46										
	2-Wire VG Loop/2-Wire Voice Grade Port (Centrex)Port Combo - Non-Design		2	UEP95		15.76										
	2-Wire VG Loop/2-Wire Voice Grade Port (Centrex)Port Combo - Non-Design		3	UEP95		32.56										
UNE Port/Loop Combination Rates (Design)																
	2-Wire VG Loop/2-Wire Voice Grade Port (Centrex) Port Combo - Design		1	UEP95		12.47										

UNBUNDLED NETWORK ELEMENTS - Georgia														Attachment: 2		Exhibit: A	
CATEGORY	RATE ELEMENTS	Interim	Zone	BCS	USOC	RATES ($)					Svc Order Submitted Elec per LSR	Svc Order Submitted Manually per LSR	Incremental Charge - Manual Svc Order vs. Electronic-1st	Incremental Charge - Manual Svc Order vs. Electronic-Add'l	Incremental Charge - Manual Svc Order vs. Electronic-Disc 1st	Incremental Charge - Manual Svc Order vs. Electronic-Disc Add'l
						Rec	Nonrecurring		Nonrecurring Disconnect		OSS Rates ($)					
							First	Add'l	First	Add'l	SOMEC	SOMAN	SOMAN	SOMAN	SOMAN	SOMAN
	2-Wire VG Loop/2-Wire Voice Grade Port (Centrex)Port Combo - Design		2	UEP95		17.85										
	2-Wire VG Loop/2-Wire Voice Grade Port (Centrex)Port Combo - Design		3	UEP95		33.98										
UNE Loop Rate																
	2-Wire Voice Grade Loop (SL 1) - Zone 1		1	UEP95	UECS1	9.56										
	2-Wire Voice Grade Loop (SL 1) - Zone 2		2	UEP95	UECS1	14.86										
	2-Wire Voice Grade Loop (SL 1) - Zone 3		3	UEP95	UECS1	31.66										
	2-Wire Voice Grade Loop (SL 2) - Zone 1		1	UEP95	UECS2	11.57										
	2-Wire Voice Grade Loop (SL 2) - Zone 2		2	UEP95	UECS2	16.95										
	2-Wire Voice Grade Loop (SL 2) - Zone 3		3	UEP95	UECS2	33.08										
UNE Port Rate																
All States																
	2-Wire Voice Grade Port (Centrex) Basic Local Area			UEP95	UEPYA	0.9019	10.05	7.36	1.37	1.28						
	2-Wire Voice Grade Port (Centrex 800 termination)			UEP95	UEPYB	0.9019	10.05	7.36	1.37	1.28						
	2-Wire Voice Grade Port (Centrex with Caller ID)1Basic Local Area			UEP95	UEPYH	0.9019	10.05	7.36	1.37	1.28						
	2-Wire Voice Grade Port (Centrex from diff Serving Wire Center)2,3 Basic Local Area			UEP95	UEPYM	0.9019	82.27	26.96	20.29	9.15						
	2-Wire Voice Grade Port, Diff Serving Wire Center 2,3 - 800 Service Term - Basic Local Area			UEP95	UEPYZ	0.9019	82.27	26.96	20.29	9.15						
	2-Wire Voice Grade Port terminated in on Megalink or equivalent - Basic Local Area			UEP95	UEPY9	0.9019	10.05	7.36	1.37	1.28						
	2-Wire Voice Grade Port Terminated on 800 Service Term - Basic Local Area			UEP95	UEPY2	0.9019	10.05	7.36	1.37	1.28						
FL & GA Only																
	2-Wire Voice Grade Port (Centrex)			UEP95	UEPHA	0.9019	10.05	7.36	1.37	1.28						
	2-Wire Voice Grade Port (Centrex 800 termination)			UEP95	UEPHB	0.9019	10.05	7.36	1.37	1.28						
	2-Wire Voice Grade Port (Centrex with Caller ID)1			UEP95	UEPHH	0.9019	10.05	7.36	1.37	1.28						
	2-Wire Voice Grade Port (Centrex from diff Serving Wire Center)2,3			UEP95	UEPHM	0.9019	82.27	26.96	20.29	9.15						
	2-Wire Voice Grade Port, Diff Serving Wire Center - 800 Service Term 2,3			UEP95	UEPHZ	0.9019	82.27	26.96	20.29	9.15						
	2-Wire Voice Grade Port terminated in on Megalink or equivalent			UEP95	UEPH9	0.9019	10.05	7.36	1.37	1.28						
	2-Wire Voice Grade Port Terminated on 800 Service Term			UEP95	UEPH2	0.9019	10.05	7.36	1.37	1.28						
Local Switching																
	Centrex Intercom Funtionality, per port			UEP95	URECS	0.4237										
Local Number Portability																
	Local Number Portability (1 per port)			UEP95	LNPCC	0.35										
Features																
	All Standard Features Offered, per port			UEP95	UEPVF	0.775										
	All Select Features Offered, per port			UEP95	UEPVS	0.00	0.00									
	All Centrex Control Features Offered, per port			UEP95	UEPVC	0.00										
NARS																
	Unbundled Network Access Register - Combination			UEP95	UARCX	0.00	0.00	0.00	0.00	0.00						
	Unbundled Network Access Register - Indial			UEP95	UAR1X	0.00	0.00	0.00	0.00	0.00						
	Unbundled Network Access Register - Outdial			UEP95	UAROX	0.00	0.00	0.00	0.00	0.00						
Miscellaneous Terminations																
2-Wire Trunk Side																
	Trunk Side Terminations, each			UEP95	CEND6	5.50	122.26	18.65	54.82	3.45						
4-Wire Digital (1.544 Megabits)																
	DS1 Circuit Terminations, each			UEP95	M1HD1	41.20	200.96	93.00	65.81	2.33						
	DS0 Channels Activated, each			UEP95	M1HDO	0.00	13.95									
Interoffice Channel Mileage - 2-Wire																
	Interoffice Channel Facilities Termination			UEP95	M1GBC	12.87	48.46	19.48	16.58	5.00						
	Interoffice Channel mileage, per mile or fraction of mile			UEP95	M1GBM	0.0057										
Feature Activations (DS0) Centrex Loops on Channelized DS1 Service																
D4 Channel Bank Feature Activations																

UNBUNDLED NETWORK ELEMENTS - Georgia														Attachment: 2		Exhibit: A	
CATEGORY		RATE ELEMENTS	Interim	Zone	BCS	USOC	RATES ($)					Svc Order Submitted Elec per LSR	Svc Order Submitted Manually per LSR	Incremental Charge - Manual Svc Order vs. Electronic-1st	Incremental Charge - Manual Svc Order vs. Electronic-Add'l	Incremental Charge - Manual Svc Order vs. Electronic-Disc 1st	Incremental Charge - Manual Svc Order vs. Electronic-Disc Add'l
							Rec	Nonrecurring		Nonrecurring Disconnect		OSS Rates ($)					
								First	Add'l	First	Add'l	SOMEC	SOMAN	SOMAN	SOMAN	SOMAN	SOMAN
		Feature Activation on D-4 Channel Bank Centrex Loop Slot			UEP95	1PQWS	0.4689										
		Feature Activation on D-4 Channel Bank FX line Side Loop Slot			UEP95	1PQW6	0.4689										
		Feature Activation on D-4 Channel Bank FX Trunk Side Loop Slot			UEP95	1PQW7	0.4689										
		Feature Activation on D-4 Channel Bank Centrex Loop Slot - Different Wire Center			UEP95	1PQWP	0.4689										
		Feature Activation on D-4 Channel Bank Private Line Loop Slot			UEP95	1PQWV	0.4689										
		Feature Activation on D-4 Channel Bank Tjie Line/Trunk Loop Slot			UEP95	1PQWQ	0.4689										
		Feature Activation on D-4 Channel Bank WATS Loop Slot			UEP95	1PQWA	0.4689										
	Non-Recurring Charges (NRC) Associated with UNE-P Centrex																
		NRC Conversion Currently Combined Switch-As-Is with allowed changes, per port			UEP95	USAC2		0.10	0.10								
		New Centrex Standard Common Block			UEP95	M1ACS	0.00	317.90	37.59	48.99	5.92						
		New Centrex Customized Common Block			UEP95	M1ACC	0.00	317.90	37.59	48.99	5.92						
		NAR Establishment Charge, Per Occasion			UEP95	URECA	0.00	0.00									
	Additional Non-Recurring Charges (NRC)																
		Unbundled Miscellaneous Rate Element, Tag Loop at End Use Premise			UEP95	URETL		8.33	0.83								
		Unbundled Miscellaneous Rate Element, Tag Design Loop at End Use Premise			UEP95	URETN		11.19	1.10								
	UNE-P CENTREX - DMS100 (Valid in All States)																
	2-Wire VG Loop/2-Wire Voice Grade Port (Centrex) Combo																
	UNE Port/Loop Combination Rates (Non-Design)																
		2-Wire VG Loop/2-Wire Voice Grade Port (Centrex) Port Combo - Non-Design		1	UEP9D		10.46										
		2-Wire VG Loop/2-Wire Voice Grade Port (Centrex)Port Combo - Non-Design		2	UEP9D		15.76										
		2-Wire VG Loop/2-Wire Voice Grade Port (Centrex)Port Combo - Non-Design		3	UEP9D		32.56										
	UNE Port/Loop Combination Rates (Design)																
		2-Wire VG Loop/2-Wire Voice Grade Port (Centrex) Port Combo - Design		1	UEP9D		12.47										
		2-Wire VG Loop/2-Wire Voice Grade Port (Centrex)Port Combo - Design		2	UEP9D		17.85										
		2-Wire VG Loop/2-Wire Voice Grade Port (Centrex)Port Combo - Design		3	UEP9D		33.98										
	UNE Loop Rate																
		2-Wire Voice Grade Loop (SL 1) - Zone 1		1	UEP9D	UECS1	9.56										
		2-Wire Voice Grade Loop (SL 1) - Zone 2		2	UEP9D	UECS1	14.86										
		2-Wire Voice Grade Loop (SL 1) - Zone 3		3	UEP9D	UECS1	31.66										
		2-Wire Voice Grade Loop (SL 2) - Zone 1		1	UEP9D	UECS2	11.57										
		2-Wire Voice Grade Loop (SL 2) - Zone 2		2	UEP9D	UECS2	16.95										
		2-Wire Voice Grade Loop (SL 2) - Zone 3		3	UEP9D	UECS2	33.08										
	UNE Port Rate																
	ALL STATES																
		2-Wire Voice Grade Port (Centrex) Basic Local Area			UEP9D	UEPYA	0.9019	10.05	7.36	1.37	1.28						
		2-Wire Voice Grade Port (Centrex 800 termination)Basic Local Area			UEP9D	UEPYB	0.9019	10.05	7.36	1.37	1.28						
		2-Wire Voice Grade Port (Centrex / EBS-PSET)3Basic Local Area			UEP9D	UEPYC	0.9019	10.05	7.36	1.37	1.28						
		2-Wire Voice Grade Port (Centrex / EBS-M5009)3Basic Local Area			UEP9D	UEPYD	0.9019	10.05	7.36	1.37	1.28						
		2-Wire Voice Grade Port (Centrex / EBS-M5209))3 Basic Local Area			UEP9D	UEPYE	0.9019	10.05	7.36	1.37	1.28						
		2-Wire Voice Grade Port (Centrex / EBS-M5112))3 Basic Local Area			UEP9D	UEPYF	0.9019	10.05	7.36	1.37	1.28						

UNBUNDLED NETWORK ELEMENTS - Georgia														Attachment: 2		Exhibit: A	
CATEGORY		RATE ELEMENTS	Interim	Zone	BCS	USOC	RATES ($)					Svc Order Submitted Elec per LSR	Svc Order Submitted Manually per LSR	Incremental Charge - Manual Svc Order vs. Electronic-1st	Incremental Charge - Manual Svc Order vs. Electronic-Add'l	Incremental Charge - Manual Svc Order vs. Electronic-Disc 1st	Incremental Charge - Manual Svc Order vs. Electronic-Disc Add'l
							Rec	Nonrecurring		Nonrecurring Disconnect		OSS Rates ($)					
								First	Add'l	First	Add'l	SOMEC	SOMAN	SOMAN	SOMAN	SOMAN	SOMAN
		2-Wire Voice Grade Port (Centrex / EBS-M5312))3Basic Local Area			UEP9D	UEPYG	0.9019	10.05	7.36	1.37	1.28						
		2-Wire Voice Grade Port (Centrex / EBS-M5008))3 Basic Local Area			UEP9D	UEPYT	0.9019	10.05	7.36	1.37	1.28						
		2-Wire Voice Grade Port (Centrex / EBS-M5208))3 Basic Local Area			UEP9D	UEPYU	0.9019	10.05	7.36	1.37	1.28						
		2-Wire Voice Grade Port (Centrex / EBS-M5216))3 Basic Local Area			UEP9D	UEPYV	0.9019	10.05	7.36	1.37	1.28						
		2-Wire Voice Grade Port (Centrex / EBS-M5316))3 Basic Local Area			UEP9D	UEPY3	0.9019	10.05	7.36	1.37	1.28						
		2-Wire Voice Grade Port (Centrex with Caller ID) Basic Local Area			UEP9D	UEPYH	0.9019	10.05	7.36	1.37	1.28						
		2-Wire Voice Grade Port (Centrex/Caller ID/Msg Wtg Lamp Indication))4 Basic Local Area			UEP9D	UEPYW	0.9019	10.05	7.36	1.37	1.28						
		2-Wire Voice Grade Port (Centrex/Msg Wtg Lamp Indication))4 Basic Local Area			UEP9D	UEPYJ	0.9019	10.05	7.36	1.37	1.28						
		2-Wire Voice Grade Port (Centrex from diff Serving Wire Center) 2,3-Basic Local Area			UEP9D	UEPYM	0.9019	82.27	26.96	20.29	9.15						
		2-Wire Voice Grade Port (Centrex/differ SWC /EBS-PSET)2,3,4 Basic Local Area			UEP9D	UEPYO	0.9019	82.27	26.96	20.29	9.15						
		2-Wire Voice Grade Port (Centrex/differ SWC /EBS-M5009)2,3,4 Basic Local Area			UEP9D	UEPYP	0.9019	82.27	26.96	20.29	9.15						
		2-Wire Voice Grade Port (Centrex/differ SWC /EBS-5209)2,3,4 Basic Local Area			UEP9D	UEPYQ	0.9019	82.27	26.96	20.29	9.15						
		2-Wire Voice Grade Port (Centrex/differ SWC /EBS-M5112)2,3,4 Basic Local Area			UEP9D	UEPYR	0.9019	82.27	26.96	20.29	9.15						
		2-Wire Voice Grade Port (Centrex/differ SWC /EBS-M5312)2,3,4 Basic Local Area			UEP9D	UEPYS	0.9019	82.27	26.96	20.29	9.15						
		2-Wire Voice Grade Port (Centrex/differ SWC /EBS-M5008)2,3,4 Basic Local Area			UEP9D	UEPY4	0.9019	82.27	26.96	20.29	9.15						
		2-Wire Voice Grade Port (Centrex/differ SWC /EBS-M5208)2, 3 Basic Local Area			UEP9D	UEPY5	0.9019	82.27	26.96	20.29	9.15						
		2-Wire Voice Grade Port (Centrex/differ SWC /EBS-M5216)2,3,4 Basic Local Area			UEP9D	UEPY6	0.9019	82.27	26.96	20.29	9.15						
		2-Wire Voice Grade Port (Centrex/differ SWC /EBS-M5316)2,3,4 Basic Local Area			UEP9D	UEPY7	0.9019	82.27	26.96	20.29	9.15						
		2-Wire Voice Grade Port, Diff Serving Wire Center - 800 Service Term 2,3			UEP9D	UEPYZ	0.9019	82.27	26.96	20.29	9.15						
		2-Wire Voice Grade Port terminated in on Megalink or equivalent Basic Local Area			UEP9D	UEPY9	0.9019	10.05	7.36	1.37	1.28						
		2-Wire Voice Grade Port Terminated on 800 Service Term Basic Local Area			UEP9D	UEPY2	0.9019	10.05	7.36	1.37	1.28						
	FL & GA Only																
		2-Wire Voice Grade Port (Centrex)			UEP9D	UEPHA	0.9019	10.05	7.36	1.37	1.28						
		2-Wire Voice Grade Port (Centrex 800 termination)			UEP9D	UEPHB	0.9019	10.05	7.36	1.37	1.28						
		2-Wire Voice Grade Port (Centrex / EBS-PSET)4			UEP9D	UEPHC	0.9019	10.05	7.36	1.37	1.28						
		2-Wire Voice Grade Port (Centrex / EBS-M5009)4			UEP9D	UEPHD	0.9019	10.05	7.36	1.37	1.28						
		2-Wire Voice Grade Port (Centrex / EBS-M5209)4			UEP9D	UEPHE	0.9019	10.05	7.36	1.37	1.28						
		2-Wire Voice Grade Port (Centrex / EBS-M5112)4			UEP9D	UEPHF	0.9019	10.05	7.36	1.37	1.28						
		2-Wire Voice Grade Port (Centrex / EBS-M5312)4			UEP9D	UEPHG	0.9019	10.05	7.36	1.37	1.28						
		2-Wire Voice Grade Port (Centrex / EBS-M5008)4			UEP9D	UEPHT	0.9019	10.05	7.36	1.37	1.28						
		2-Wire Voice Grade Port (Centrex / EBS-M5208)4			UEP9D	UEPHU	0.9019	10.05	7.36	1.37	1.28						
		2-Wire Voice Grade Port (Centrex / EBS-M5216)4			UEP9D	UEPHV	0.9019	10.05	7.36	1.37	1.28						
		2-Wire Voice Grade Port (Centrex / EBS-M5316)4			UEP9D	UEPH3	0.9019	10.05	7.36	1.37	1.28						
		2-Wire Voice Grade Port (Centrex with Caller ID)			UEP9D	UEPHH	0.9019	10.05	7.36	1.37	1.28						
		2-Wire Voice Grade Port (Centrex/Caller ID/Msg Wtg Lamp Indication)4			UEP9D	UEPHW	0.9019	10.05	7.36	1.37	1.28						
		2-Wire Voice Grade Port (Centrex/Msg Wtg Lamp Indication)4			UEP9D	UEPHJ	0.9019	10.05	7.36	1.37	1.28						

UNBUNDLED NETWORK ELEMENTS - Georgia														Attachment: 2		Exhibit: A	
CATEGORY		RATE ELEMENTS	Interim	Zone	BCS	USOC	RATES ($)					Svc Order Submitted Elec per LSR	Svc Order Submitted Manually per LSR	Incremental Charge - Manual Svc Order vs. Electronic-1st	Incremental Charge - Manual Svc Order vs. Electronic-Add'l	Incremental Charge - Manual Svc Order vs. Electronic-Disc 1st	Incremental Charge - Manual Svc Order vs. Electronic-Disc Add'l
							Rec	Nonrecurring		Nonrecurring Disconnect		OSS Rates ($)					
								First	Add'l	First	Add'l	SOMEC	SOMAN	SOMAN	SOMAN	SOMAN	SOMAN
		2-Wire Voice Grade Port (Centrex from diff Serving Wire Center) 2,3			UEP9D	UEPHM	0.9019	82.27	26.96	20.29	9.15						
		2-Wire Voice Grade Port (Centrex/differ SWC /EBS-PSET)2,3,4			UEP9D	UEPHO	0.9019	82.27	26.96	20.29	9.15						
		2-Wire Voice Grade Port (Centrex/differ SWC /EBS-M5009)2,3,4			UEP9D	UEPHP	0.9019	82.27	26.96	20.29	9.15						
		2-Wire Voice Grade Port (Centrex/differ SWC /EBS-5209)2,3,4			UEP9D	UEPHQ	0.9019	82.27	26.96	20.29	9.15						
		2-Wire Voice Grade Port (Centrex/differ SWC /EBS-M5112)2,3,4			UEP9D	UEPHR	0.9019	82.27	26.96	20.29	9.15						
		2-Wire Voice Grade Port (Centrex/differ SWC /EBS-M5312)2, 3,4			UEP9D	UEPHS	0.9019	82.27	26.96	20.29	9.15						
		2-Wire Voice Grade Port (Centrex/differ SWC /EBS-M5008)2,3,4			UEP9D	UEPH4	0.9019	82.27	26.96	20.29	9.15						
		2-Wire Voice Grade Port (Centrex/differ SWC /EBS-M5208)2,3,4			UEP9D	UEPH5	0.9019	82.27	26.96	20.29	9.15						
		2-Wire Voice Grade Port (Centrex/differ SWC /EBS-M5216)2,3,4			UEP9D	UEPH6	0.9019	82.27	26.96	20.29	9.15						
		2-Wire Voice Grade Port (Centrex/differ SWC /EBS-M5316)2,3,4			UEP9D	UEPH7	0.9019	82.27	26.96	20.29	9.15						
		2-Wire Voice Grade Port, Diff Serving Wire Center - 800 Service Term 2,3			UEP9D	UEPHZ	0.9019	82.27	26.96	20.29	9.15						
		2-Wire Voice Grade Port terminated in on Megalink or equivalent			UEP9D	UEPH9	0.9019	10.05	7.36	1.37	1.28						
		2-Wire Voice Grade Port Terminated on 800 Service Term			UEP9D	UEPH2	0.9019	10.05	7.36	1.37	1.28						
	Local Switching																
		Centrex Intercom Funtionality, per port			UEP9D	URECS	0.4237										
	Local Number Portability																
		Local Number Portability (1 per port)			UEP9D	LNPCC	0.35										
	Features																
		All Standard Features Offered, per port			UEP9D	UEPVF	0.775										
		All Select Features Offered, per port			UEP9D	UEPVS	0.00	0.00									
		All Centrex Control Features Offered, per port			UEP9D	UEPVC	0.00										
	NARS																
		Unbundled Network Access Register - Combination			UEP9D	UARCX	0.00	0.00	0.00	0.00	0.00						
		Unbundled Network Access Register - Inward			UEP9D	UAR1X	0.00	0.00	0.00	0.00	0.00						
		Unbundled Network Access Register - Outdial			UEP9D	UAROX	0.00	0.00	0.00	0.00	0.00						
	Miscellaneous Terminations																
	2-Wire Trunk Side																
		Trunk Side Terminations, each			UEP9D	CEND6	5.50	122.26	18.65	54.82	3.45						
	4-Wire Digital (1.544 Megabits)																
		DS1 Circuit Terminations, each			UEP9D	M1HD1	41.20	200.96	93.00	65.81	2.33						
		DS0 Channels Activiated per Channel			UEP9D	M1HDO	0.00	13.95									
	Interoffice Channel Mileage - 2-Wire																
		Interoffice Channel Facilities Termination			UEP9D	M1GBC	12.87	48.46	19.48	16.58	5.00						
		Interoffice Channel mileage, per mile or fraction of mile			UEP9D	M1GBM	0.0057										
	Feature Activations (DS0) Centrex Loops on Channelized DS1 Service																
	D4 Channel Bank Feature Activations																
		Feature Activation on D-4 Channel Bank Centrex Loop Slot			UEP9D	1PQWS	0.4689										
		Feature Activation on D-4 Channel Bank FX line Side Loop Slot			UEP9D	1PQW6	0.4689										
		Feature Activation on D-4 Channel Bank FX Trunk Side Loop Slot			UEP9D	1PQW7	0.4689										
		Feature Activation on D-4 Channel Bank Centrex Loop Slot - Different Wire Center			UEP9D	1PQWP	0.4689										
		Feature Activation on D-4 Channel Bank Private Line Loop Slot			UEP9D	1PQWV	0.4689										
		Feature Activation on D-4 Channel Bank Tjie Line/Trunk Loop Slot			UEP9D	1PQWQ	0.4689										

UNBUNDLED NETWORK ELEMENTS - Georgia														Attachment: 2		Exhibit: A	
CATEGORY		RATE ELEMENTS	Interim	Zone	BCS	USOC	RATES ($)					Svc Order Submitted Elec per LSR	Svc Order Submitted Manually per LSR	Incremental Charge - Manual Svc Order vs. Electronic-1st	Incremental Charge - Manual Svc Order vs. Electronic-Add'l	Incremental Charge - Manual Svc Order vs. Electronic-Disc 1st	Incremental Charge - Manual Svc Order vs. Electronic-Disc Add'l
							Rec	Nonrecurring		Nonrecurring Disconnect		OSS Rates ($)					
								First	Add'l	First	Add'l	SOMEC	SOMAN	SOMAN	SOMAN	SOMAN	SOMAN
		Feature Activation on D-4 Channel Bank WATS Loop Slot			UEP9D	1PQWA	0.4689										
	Non-Recurring Charges (NRC) Associated with UNE-P Centrex																
		NRC Conversion Currently Combined Switch-As-Is with allowed changes, per port			UEP9D	USAC2		0.10	0.10								
		New Centrex Standard Common Block			UEP9D	M1ACS	0.00	317.90	37.59	48.99	5.92						
		New Centrex Customized Common Block			UEP9D	M1ACC	0.00	317.90	37.59	48.99	5.92						
		NAR Establishment Charge, Per Occasion			UEP9D	URECA	0.00	0.00									
	Additional Non-Recurring Charges (NRC)																
		Unbundled Miscellaneous Rate Element, Tag Loop at End Use Premise			UEP9D	URETL		8.33	0.83								
		Unbundled Miscellaneous Rate Element, Tag Design Loop at End Use Premise			UEP9D	URETN		11.19	1.10								
	Additional Non-Recurring Charges (NRC)																
		Unbundled Miscellaneous Rate Element, Tag Loop at End Use Premise			UEP9E	URETL											
		Unbundled Miscellaneous Rate Element, Tag Design Loop at End Use Premise			UEP9E	URETN											
	Note 1 - Required Port for Centrex Control in 1AESS, 5ESS & EWSD																
	Note 2 - Requres Interoffice Channel Mileage																
	Note 3 - Installation is combination of Installation charge for SL2 Loop and Port																
	Note 4 - Requires Specific Customer Premises Equipment																
	Note: Rates displaying an "R" in Interim column are interim and subject to rate true-up as set forth in General Terms and Conditions.																

UNBUNDLED NETWORK ELEMENTS - Kentucky														Attachment: 2		Exhibit: A	
CATEGORY		RATE ELEMENTS	Interim	Zone	BCS	USOC	RATES ($)					Svc Order Submitted Elec per LSR	Svc Order Submitted Manually per LSR	Incremental Charge - Manual Svc Order vs. Electronic-1st	Incremental Charge - Manual Svc Order vs. Electronic-Add'l	Incremental Charge - Manual Svc Order vs. Electronic-Disc 1st	Incremental Charge - Manual Svc Order vs. Electronic-Disc Add'l
							Rec	Nonrecurring		Nonrecurring Disconnect		OSS Rates ($)					
								First	Add'l	First	Add'l	SOMEC	SOMAN	SOMAN	SOMAN	SOMAN	SOMAN
	The "Zone" shown in the sections for stand-alone loops or loops as part of a combination refers to Geographically Deaveraged UNE Zones. To view Geographically Deaveraged UNE Zone Designations by Central Office, refer to internet Website: http://www.interconnection.bellsouth.com/become_a_clec/html/interconnection.htm																
OPERATIONAL SUPPORT SYSTEMS (OSS) - "REGIONAL RATES"																	
	NOTE: (1) CLEC should contact its contract negotiator if it prefers the "state specific" OSS charges as ordered by the State Commissions. The OSS charges currently contained in this rate exhibit are the BellSouth "regional" service ordering charges. CLEC may elect either the state specific Commission ordered rates for the service ordering charges, or CLEC may elect the regional service ordering charge, however, CLEC can not obtain a mixture of the two regardless if CLEC has a interconnection contract established in each of the 9 states.																
	NOTE: (2) Any element that can be ordered electronically will be billed according to the SOMEC rate listed in this category. Please refer to BellSouth's Local Ordering Handbook (LOH) to determine if a product can be ordered electronically. For those elements that cannot be ordered electronically at present per the LOH, the listed SOMEC rate in this category reflects the charge that would be billed to a CLEC once electronic ordering capabilities come on-line for that element. Otherwise, the manual ordering charge, SOMAN, will be applied to a CLECs bill when it submits an LSR to BellSouth.																
		OSS - Electronic Service Order Charge, Per Local Service Request (LSR) - UNE Only				SOMEC		3.50	0.00	3.50	0.00						
		OSS - Manual Service Order Charge, Per Local Service Request (LSR) - UNE Only				SOMAN		7.86	0.00	0.99	0.00						
UNE SERVICE DATE ADVANCEMENT CHARGE																	
	NOTE: The Expedite charge will be maintained commensurate with BellSouth's FCC No.1 Tariff, Section 5 as applicable.																
		UNE Expedite Charge per Circuit or Line Assignable USOC, per Day			UAL, UEANL, UCL, UEF, UDF, UEQ, UDL, UENTW, UDN, UEA, UHL, ULC, USL, U1T12, U1T48, U1TD1, U1TD3, U1TDX, U1TO3, U1TS1, U1TVX, UC1BC, UC1BL, UC1CC, UC1CL, UC1DC, UC1DL, UC1EC, UC1EL, UC1FC, UC1FL, UC1GC, UC1GL, UC1HC, UC1HL, UDL12, UDL48, UDLO3, UDLSX, UE3, ULD12, ULD48, ULDD1, ULDD3, ULDDX, ULDO3, ULDS1, ULDVX, UNC1X, UNC3X, UNCDX, UNCNX, UNCSX, UNCVX, UNLD1, UNLD3, UXTD1, UXTD3, UXTS1, U1TUC, U1TUD, U1TUB, U1TUA	SDASP		200.00									
UNBUNDLED EXCHANGE ACCESS LOOP																	
	2-WIRE ANALOG VOICE GRADE LOOP																
		2-Wire Analog Voice Grade Loop - Service Level 1- Zone 1		1	UEANL	UEAL2	10.56	46.66	22.57	26.65	7.65						
		2-Wire Analog Voice Grade Loop - Service Level 1- Zone 2		2	UEANL	UEAL2	15.34	46.66	22.57	26.65	7.65						
		2-Wire Analog Voice Grade Loop - Service Level 1- Zone 3		3	UEANL	UEAL2	31.11	46.66	22.57	26.65	7.65						
		2-Wire Analog Voice Grade Loop - Service Level 1- Zone 1		1	UEANL	UEASL	10.56	46.66	22.57	26.65	7.65						
		2-Wire Analog Voice Grade Loop - Service Level 1- Zone 2		2	UEANL	UEASL	15.34	46.66	22.57	26.65	7.65						
		2-Wire Analog Voice Grade Loop - Service Level 1- Zone 3		3	UEANL	UEASL	31.11	46.66	22.57	26.65	7.65						
		Unbundled Miscellaneous Rate Element, Tag Loop at End User Premise			UEANL	URETL		8.33	0.83								
		Loop Testing - Basic 1st Half Hour			UEANL	URET1		46.88	46.88								
		Loop Testing - Basic Additional Half Hour			UEANL	URETA		24.16	24.16								

UNBUNDLED NETWORK ELEMENTS - Kentucky														Attachment: 2		Exhibit: A	
CATEGORY		RATE ELEMENTS	Interim	Zone	BCS	USOC	RATES ($)					Svc Order Submitted Elec per LSR	Svc Order Submitted Manually per LSR	Incremental Charge - Manual Svc Order vs. Electronic-1st	Incremental Charge - Manual Svc Order vs. Electronic-Add'l	Incremental Charge - Manual Svc Order vs. Electronic-Disc 1st	Incremental Charge - Manual Svc Order vs. Electronic-Disc Add'l
							Rec	Nonrecurring		Nonrecurring Disconnect		OSS Rates ($)					
								First	Add'l	First	Add'l	SOMEC	SOMAN	SOMAN	SOMAN	SOMAN	SOMAN
		CLEC to CLEC Conversion Charge Without Outside Dispatch (UVL-SL1)			UEANL	UREWO		15.78	8.94								
		Unbundled Voice Loop, Non-Design Voice Loop, billing for BST providing make-up (Engineering Information - E.I.)			UEANL	UEANM		13.49	13.49								
		Manual Order Coordination for UVL-SL1s (per loop)			UEANL	UEAMC		9.00	9.00								
		Order Coordination for Specified Conversion Time for UVL-SL1 (per LSR)			UEANL	OCOSL		23.01	23.01								
	2-WIRE Unbundled COPPER LOOP																
		2-Wire Unbundled Copper Loop - Non-Designed Zone 1	I	1	UEQ	UEQ2X	10.58	44.97	20.89	25.64	6.65						
		2 Wire Unbundled Copper Loop - Non-Designed - Zone 2	I	2	UEQ	UEQ2X	11.51	44.97	20.89	25.64	6.65						
		2 Wire Unbundled Copper Loop - Non-Designed - Zone 3	I	3	UEQ	UEQ2X	13.19	44.97	20.89	25.64	6.65						
		Unbundled Miscellaneous Rate Element, Tag Loop at End User Premise			UEQ	URETL		8.33	0.83								
		Manual Order Coordination 2 Wire Unbundled Copper Loop - Non-Designed (per loop)			UEQ	USBMC		9.00	9.00								
		Unbundled Copper Loop, Non-Design Copper Loop, billing for BST providing make-up (Engineering Information - E.I.)			UEQ	UEQMU		13.49	13.49								
		Loop Testing - Basic 1st Half Hour			UEQ	URET1		46.88	46.88								
		Loop Testing - Basic Additional Half Hour			UEQ	URETA		24.16	24.16								
		CLEC to CLEC Conversion Charge Without Outside Dispatch (UCL-ND)			UEQ	UREWO		14.27	7.43								
UNBUNDLED EXCHANGE ACCESS LOOP																	
	2-WIRE ANALOG VOICE GRADE LOOP																
		2 Wire Analog Voice Grade Loop-Service Level 1-Line Splitting-Zone 1		1	UEPSR UEPSB	UEALS	10.56	46.66	22.57	26.65	7.65						
		2 Wire Analog Voice Grade Loop-Service Level 1-Line Splitting-Zone 1		1	UEPSR UEPSB	UEABS	10.56	46.66	22.57	26.65	7.65						
		2 Wire Analog Voice Grade Loop- Service Level 1-Line Splitting-Zone 2		2	UEPSR UEPSB	UEALS	15.34	46.66	22.57	26.65	7.65						
		2 Wire Analog Voice Grade Loop- Service Level 1-Line Splitting-Zone 2		2	UEPSR UEPSB	UEABS	15.34	46.66	22.57	26.65	7.65						
		2 Wire Analog Voice Grade Loop-Service Level 1-Line Splitting-Zone 3		3	UEPSR UEPSB	UEALS	31.11	46.66	22.57	26.65	7.65						
		2 Wire Analog Voice Grade Loop-Service Level 1-Line Splitting-Zone 3		3	UEPSR UEPSB	UEABS	31.11	46.66	22.57	26.65	7.65						
UNBUNDLED EXCHANGE ACCESS LOOP																	
	2-WIRE ANALOG VOICE GRADE LOOP																
		2-Wire Analog Voice Grade Loop - Service Level 2 w/Loop or Ground Start Signaling - Zone 1		1	UEA	UEAL2	12.67	134.89	81.87	73.65	14.88						
		2-Wire Analog Voice Grade Loop - Service Level 2 w/Loop or Ground Start Signaling - Zone 2		2	UEA	UEAL2	17.45	134.89	81.87	73.65	14.88						
		2-Wire Analog Voice Grade Loop - Service Level 2 w/Loop or Ground Start Signaling - Zone 3		3	UEA	UEAL2	33.22	134.89	81.87	73.65	14.88						
		Order Coordination for Specified Conversion Time (per LSR)			UEA	OCOSL		23.01									
		2-Wire Analog Voice Grade Loop - Service Level 2 w/Reverse Battery Signaling - Zone 1		1	UEA	UEAR2	12.67	134.89	81.87	73.65	14.88						
		2-Wire Analog Voice Grade Loop - Service Level 2 w/Reverse Battery Signaling - Zone 2		2	UEA	UEAR2	17.45	134.89	81.87	73.65	14.88						
		2-Wire Analog Voice Grade Loop - Service Level 2 w/Reverse Battery Signaling - Zone 3		3	UEA	UEAR2	33.22	134.89	81.87	73.65	14.88						
		Order Coordination for Specified Conversion Time (per LSR)			UEA	OCOSL		23.01									
		CLEC to CLEC Conversion Charge without outside dispatch			UEA	UREWO		87.72	36.36								
		Loop Tagging - Service Level 2 (SL2)			UEA	URETL		11.21	1.10								
	4-WIRE ANALOG VOICE GRADE LOOP																
		4-Wire Analog Voice Grade Loop - Zone 1		1	UEA	UEAL4	29.26	164.11	112.36	78.91	18.66						
		4-Wire Analog Voice Grade Loop - Zone 2		2	UEA	UEAL4	34.25	164.11	112.36	78.91	18.66						
		4-Wire Analog Voice Grade Loop - Zone 3		3	UEA	UEAL4	85.06	164.11	112.36	78.91	18.66						
		Order Coordination for Specified Conversion Time (per LSR)			UEA	OCOSL		23.01									
		CLEC to CLEC Conversion Charge without outside dispatch			UEA	UREWO		87.72	36.36								

UNBUNDLED NETWORK ELEMENTS - Kentucky														Attachment: 2		Exhibit: A	
CATEGORY	RATE ELEMENTS	Interim	Zone	BCS	USOC	RATES ($)					Svc Order Submitted Elec per LSR	Svc Order Submitted Manually per LSR	Incremental Charge - Manual Svc Order vs. Electronic-1st	Incremental Charge - Manual Svc Order vs. Electronic-Add'l	Incremental Charge - Manual Svc Order vs. Electronic-Disc 1st	Incremental Charge - Manual Svc Order vs. Electronic-Disc Add'l
						Rec	Nonrecurring		Nonrecurring Disconnect		OSS Rates ($)					
							First	Add'l	First	Add'l	SOMEC	SOMAN	SOMAN	SOMAN	SOMAN	SOMAN
2-WIRE ISDN DIGITAL GRADE LOOP																
	2-Wire ISDN Digital Grade Loop - Zone 1		1	UDN	U1L2X	18.44	146.77	95.02	71.38	13.83						
	2-Wire ISDN Digital Grade Loop - Zone 2		2	UDN	U1L2X	25.08	146.77	95.02	71.38	13.83						
	2-Wire ISDN Digital Grade Loop - Zone 3		3	UDN	U1L2X	42.87	146.77	95.02	71.38	13.83						
	Order Coordination For Specified Conversion Time (per LSR)			UDN	OCOSL		23.01									
	CLEC to CLEC Conversion Charge without outside dispatch			UDN	UREWO		91.63	44.16								
2-WIRE ASYMMETRICAL DIGITAL SUBSCRIBER LINE (ADSL) COMPATIBLE LOOP																
	2 Wire Unbundled ADSL Loop including manual service inquiry & facility reservation - Zone 1		1	UAL	UAL2X	10.82	141.98	79.73	69.02	11.47						
	2 Wire Unbundled ADSL Loop including manual service inquiry & facility reservation - Zone 2		2	UAL	UAL2X	11.79	141.98	79.73	69.02	11.47						
	2 Wire Unbundled ADSL Loop including manual service inquiry & facility reservation - Zone 3		3	UAL	UAL2X	12.87	141.98	79.73	69.02	11.47						
	Order Coordination for Specified Conversion Time (per LSR)			UAL	OCOSL		23.01									
	2 Wire Unbundled ADSL Loop without manual service inquiry & facility reservaton - Zone 1		1	UAL	UAL2W	10.82	121.18	69.00	69.09	11.54						
	2 Wire Unbundled ADSL Loop without manual service inquiry & facility reservaton - Zone 2		2	UAL	UAL2W	11.79	121.18	69.00	69.09	11.54						
	2 Wire Unbundled ADSL Loop without manual service inquiry & facility reservaton - Zone 3		3	UAL	UAL2W	12.87	121.18	69.00	69.09	11.54						
	Order Coordination for Specified Conversion Time (per LSR)			UAL	OCOSL		23.01									
	CLEC to CLEC Conversion Charge without outside dispatch			UAL	UREWO		86.20	40.40								
2-WIRE HIGH BIT RATE DIGITAL SUBSCRIBER LINE (HDSL) COMPATIBLE LOOP																
	2 Wire Unbundled HDSL Loop including manual service inquiry & facility reservation - Zone 1		1	UHL	UHL2X	8.75	151.54	89.29	69.09	11.54						
	2 Wire Unbundled HDSL Loop including manual service inquiry & facility reservation - Zone 2		2	UHL	UHL2X	9.56	151.54	89.29	69.09	11.54						
	2 Wire Unbundled HDSL Loop including manual service inquiry & facility reservation - Zone 3		3	UHL	UHL2X	10.61	151.54	89.29	69.09	11.54						
	Order Coordination for Specified Conversion Time (per LSR)			UHL	OCOSL		23.01									
	2 Wire Unbundled HDSL Loop without manual service inquiry and facility reservation - Zone 1		1	UHL	UHL2W	8.75	130.74	78.56	69.09	11.54						
	2 Wire Unbundled HDSL Loop without manual service inquiry and facility reservation - Zone 2		2	UHL	UHL2W	9.56	130.74	78.56	69.09	11.54						
	2 Wire Unbundled HDSL Loop without manual service inquiry and facility reservation - Zone 3		3	UHL	UHL2W	10.61	130.74	78.56	69.09	11.54						
	Order Coordination for Specified Conversion Time (per LSR)			UHL	OCOSL		23.01									
	CLEC to CLEC Conversion Charge without outside dispatch			UHL	UREWO		86.14	40.40								
4-WIRE HIGH BIT RATE DIGITAL SUBSCRIBER LINE (HDSL) COMPATIBLE LOOP																
	4 Wire Unbundled HDSL Loop including manual service inquiry and facility reservation - Zone 1		1	UHL	UHL4X	13.95	185.75	123.50	74.95	14.69						
	4-Wire Unbundled HDSL Loop including manual service inquiry and facility reservation - Zone 2	I	2	UHL	UHL4X	15.68	185.75	123.50	74.95	14.69						
	4-Wire Unbundled HDSL Loop including manual service inquiry and facility reservation - Zone 3		3	UHL	UHL4X	16.98	185.75	123.50	74.95	14.69						
	Order Coordination for Specified Conversion Time (per LSR)			UHL	OCOSL		23.01									
	4-Wire Unbundled HDSL Loop without manual service inquiry and facility reservation - Zone 1		1	UHL	UHL4W	13.95	164.95	114.04	77.32	15.80						
	4-Wire Unbundled HDSL Loop without manual service inquiry and facility reservation - Zone 2		2	UHL	UHL4W	15.68	164.95	114.04	77.32	15.80						
	4-Wire Unbundled HDSL Loop without manual service inquiry and facility reservation - Zone 3		3	UHL	UHL4W	16.98	164.95	114.04	77.32	15.80						
	Order Coordination for Specified Conversion Time (per LSR)			UHL	OCOSL		23.01									
	CLEC to CLEC Conversion Charge without outside dispatch			UHL	UREWO		86.14	40.40								
4-WIRE DS1 DIGITAL LOOP																
	4-Wire DS1 Digital Loop - Zone 1		1	USL	USLXX	86.47	306.69	174.44	65.83	14.55						
	4-Wire DS1 Digital Loop - Zone 2		2	USL	USLXX	114.10	306.69	174.44	65.83	14.55						
	4-Wire DS1 Digital Loop - Zone 3		3	USL	USLXX	297.76	306.69	174.44	65.83	14.55						
	Order Coordination for Specified Conversion Time (per LSR)			USL	OCOSL		23.01									

UNBUNDLED NETWORK ELEMENTS - Kentucky														Attachment: 2		Exhibit: A	
CATEGORY		RATE ELEMENTS	Interim	Zone	BCS	USOC	RATES ($)					Svc Order Submitted Elec per LSR	Svc Order Submitted Manually per LSR	Incremental Charge - Manual Svc Order vs. Electronic-1st	Incremental Charge - Manual Svc Order vs. Electronic-Add'l	Incremental Charge - Manual Svc Order vs. Electronic-Disc 1st	Incremental Charge - Manual Svc Order vs. Electronic-Disc Add'l
							Rec	Nonrecurring		Nonrecurring Disconnect		OSS Rates ($)					
								First	Add'l	First	Add'l	SOMEC	SOMAN	SOMAN	SOMAN	SOMAN	SOMAN
		CLEC to CLEC Conversion Charge without outside dispatch			USL	UREWO		101.09	43.04								
	4-WIRE 19.2, 56 OR 64 KBPS DIGITAL GRADE LOOP																
		4 Wire Unbundled Digital 19.2 Kbps		1	UDL	UDL19	27.59	157.81	106.06	78.91	18.66						
		4 Wire Unbundled Digital 19.2 Kbps		2	UDL	UDL19	32.48	157.81	106.06	78.91	18.66						
		4 Wire Unbundled Digital 19.2 Kbps		3	UDL	UDL19	36.37	157.81	106.06	78.91	18.66						
		4 Wire Unbundled Digital Loop 56 Kbps - Zone 1		1	UDL	UDL56	27.59	157.81	106.06	78.91	18.66						
		4 Wire Unbundled Digital Loop 56 Kbps - Zone 2		2	UDL	UDL56	32.48	157.81	106.06	78.91	18.66						
		4 Wire Unbundled Digital Loop 56 Kbps - Zone 3		3	UDL	UDL56	36.37	157.81	106.06	78.91	18.66						
		Order Coordination for Specified Conversion Time (per LSR)			UDL	OCOSL		23.01									
		4 Wire Unbundled Digital Loop 64 Kbps - Zone 1		1	UDL	UDL64	27.59	157.81	106.06	78.91	18.66						
		4 Wire Unbundled Digital Loop 64 Kbps - Zone 2		2	UDL	UDL64	32.48	157.81	106.06	78.91	18.66						
		4 Wire Unbundled Digital Loop 64 Kbps - Zone 3		3	UDL	UDL64	36.37	157.81	106.06	78.91	18.66						
		Order Coordination for Specified Conversion Time (per LSR)			UDL	OCOSL		23.01									
		CLEC to CLEC Conversion Charge without outside dispatch			UDL	UREWO		102.13	49.75								
	2-WIRE Unbundled COPPER LOOP																
		2-Wire Unbundled Copper Loop-Designed including manual service inquiry & facility reservation - Zone 1		1	UCL	UCLPB	10.82	140.95	78.70	69.09	11.54						
		2-Wire Unbundled Copper Loop-Designed including manual service inquiry & facility reservation - Zone 2		2	UCL	UCLPB	11.79	140.95	78.70	69.09	11.54						
		2 Wire Unbundled Copper Loop-Designed including manual service inquiry & facility reservation - Zone 3		3	UCL	UCLPB	12.87	140.95	78.70	69.09	11.54						
		Order Coordination for Unbundled Copper Loops (per loop)			UCL	UCLMC		9.00	9.00								
		2-Wire Unbundled Copper Loop-Designed without manual service inquiry and facility reservation - Zone 1		1	UCL	UCLPW	10.82	120.15	67.97	69.09	11.54						
		2-Wire Unbundled Copper Loop-Designed without manual service inquiry and facility reservation - Zone 2		2	UCL	UCLPW	11.79	120.15	67.97	69.09	11.54						
		2-Wire Unbundled Copper Loop-Designed without manual service inquiry and facility reservation - Zone 3		3	UCL	UCLPW	12.87	120.15	67.97	69.09	11.54						
		Order Coordination for Unbundled Copper Loops (per loop)			UCL	UCLMC		9.00	9.00								
		CLEC to CLEC Conversion Charge without outside dispatch (UCL-Des)			UCL	UREWO		97.23	42.48								
	4-WIRE COPPER LOOP																
		4-Wire Copper Loop-Designed including manual service inquiry and facility reservation - Zone 1		1	UCL	UCL4S	16.92	170.31	108.06	74.95	14.69						
		4-Wire Copper Loop-Designed including manual service inquiry and facility reservation - Zone 2		2	UCL	UCL4S	17.36	170.31	108.06	74.95	14.69						
		4-Wire Copper Loop-Designed including manual service inquiry and facility reservation - Zone 3		3	UCL	UCL4S	28.10	170.31	108.06	74.95	14.69						
		Order Coordination for Unbundled Copper Loops (per loop)			UCL	UCLMC		9.00	9.00								
		4-Wire Copper Loop-Designed without manual service inquiry and facility reservation - Zone 1		1	UCL	UCL4W	16.92	149.52	97.33	74.95	14.69						
		4-Wire Copper Loop-Designed without manual service inquiry and facility reservation - Zone 2		2	UCL	UCL4W	17.36	149.52	97.33	74.95	14.69						
		4-Wire Copper Loop-Designed without manual service inquiry and facility reservation - Zone 3		3	UCL	UCL4W	28.10	149.52	97.33	74.95	14.69						
		Order Coordination for Unbundled Copper Loops (per loop)			UCL	UCLMC		9.00	9.00								
		CLEC to CLEC Conversion Charge without outside dispatch (UCL-Des)			UCL	UREWO		97.23	42.48								
LOOP MODIFICATION																	
		Unbundled Loop Modification, Removal of Load Coils - 2 Wire pair less than or equal to 18k ft, per Unbundled Loop			UAL, UHL, UCL, UEQ, ULS, UEA, UEANL, UEPSR, UEPSB	ULM2L		9.24	9.24								
		Unbundled Loop Modification Removal of Load Coils - 4 Wire less than or equal to 18K ft, per Unbundled Loop			UHL, UCL, UEA	ULM4L		9.24	9.24								
		Unbundled Loop Modification Removal of Bridged Tap Removal, per unbundled loop			UAL, UHL, UCL, UEQ, ULS, UEA, UEANL, UEPSR, UEPSB	ULMBT		10.47	10.47								

UNBUNDLED NETWORK ELEMENTS - Kentucky														Attachment: 2		Exhibit: A	
CATEGORY		RATE ELEMENTS	Interim	Zone	BCS	USOC	RATES ($)					Svc Order Submitted Elec per LSR	Svc Order Submitted Manually per LSR	Incremental Charge - Manual Svc Order vs. Electronic-1st	Incremental Charge - Manual Svc Order vs. Electronic-Add'l	Incremental Charge - Manual Svc Order vs. Electronic-Disc 1st	Incremental Charge - Manual Svc Order vs. Electronic-Disc Add'l
							Rec	Nonrecurring		Nonrecurring Disconnect		OSS Rates ($)					
								First	Add'l	First	Add'l	SOMEC	SOMAN	SOMAN	SOMAN	SOMAN	SOMAN
SUB-LOOPS																	
	Sub-Loop Distribution																
		Sub-Loop - Per Cross Box Location - CLEC Feeder Facility Set-Up	I		UEANL	USBSA		207.91	207.91								
		Sub-Loop - Per Cross Box Location - Per 25 Pair Panel Set-Up	I		UEANL	USBSB		12.50	12.50								
		Sub-Loop - Per Building Equipment Room - CLEC Feeder Facility Set-Up	I		UEANL	USBSC		80.87	80.87								
		Sub-Loop - Per Building Equipment Room - Per 25 Pair Panel Set-Up	I		UEANL	USBSD		45.04	45.04								
		Sub-Loop Distribution Per 2-Wire Analog Voice Grade Loop - Zone 1	I	1	UEANL	USBN2	6.34	85.03	39.05	59.81	7.90						
		Sub-Loop Distribution Per 2-Wire Analog Voice Grade Loop - Zone 2	I	2	UEANL	USBN2	9.06	85.03	39.05	59.81	7.90						
		Sub-Loop Distribution Per 2-Wire Analog Voice Grade Loop - Zone 3	I	3	UEANL	USBN2	14.82	85.03	39.05	59.81	7.90						
		Order Coordination for Unbundled Sub-Loops, per sub-loop pair			UEANL	USBMC		9.00	9.00								
		Sub-Loop Distribution Per 4-Wire Analog Voice Grade Loop - Zone 1		1	UEANL	USBN4	8.14	102.31	56.32	65.24	10.88						
		Sub-Loop Distribution Per 4-Wire Analog Voice Grade Loop - Zone 2		2	UEANL	USBN4	8.63	102.31	56.32	65.24	10.88						
		Sub-Loop Distribution Per 4-Wire Analog Voice Grade Loop - Zone 3		3	UEANL	USBN4	25.60	102.31	56.32	65.24	10.88						
		Order Coordination for Unbundled Sub-Loops, per sub-loop pair			UEANL	USBMC		9.00	9.00								
		Sub-Loop 2-Wire Intrabuilding Network Cable (INC)	I		UEANL	USBR2	2.57	68.35	22.36	59.81	7.90						
		Order Coordination for Unbundled Sub-Loops, per sub-loop pair			UEANL	USBMC		9.00	9.00								
		Sub-Loop 4-Wire Intrabuilding Network Cable (INC)	I		UEANL	USBR4	4.98	76.49	30.51	65.24	10.88						
		Order Coordination for Unbundled Sub-Loops, per sub-loop pair			UEANL	USBMC		9.00	9.00								
		Loop Testing - Basic 1st Half Hour			UEANL	URET1		46.88	46.88								
		Loop Testing - Basic Additional Half Hour			UEANL	URETA		24.16	24.16								
		2 Wire Copper Unbundled Sub-Loop Distribution - Zone 1	I	1	UEF	UCS2X	5.45	85.03	39.05	59.81	7.90						
		2 Wire Copper Unbundled Sub-Loop Distribution - Zone 2	I	2	UEF	UCS2X	7.06	85.03	39.05	59.81	7.90						
		2 Wire Copper Unbundled Sub-Loop Distribution - Zone 3	I	3	UEF	UCS2X	9.67	85.03	39.05	59.81	7.90						
		Order Coordination for Unbundled Sub-Loops, per sub-loop pair			UEF	USBMC		9.00	9.00								
		4 Wire Copper Unbundled Sub-Loop Distribution - Zone 1	I	1	UEF	UCS4X	7.09	102.31	56.32	65.24	10.88						
		4 Wire Copper Unbundled Sub-Loop Distribution - Zone 2	I	2	UEF	UCS4X	8.66	102.31	56.32	65.24	10.88						
		4 Wire Copper Unbundled Sub-Loop Distribution - Zone 3	I	3	UEF	UCS4X	19.40	102.31	56.32	65.24	10.88						
		Order Coordination for Unbundled Sub-Loops, per sub-loop pair			UEF	USBMC		9.00	9.00								
		Loop Testing - Basic 1st Half Hour			UEF	URET1		46.88	46.88								
		Loop Testing - Basic Additional Half Hour			UEF	URETA		24.16	24.16								
	Unbundled Network Terminating Wire (UNTW)																
		Unbundled Network Terminating Wire (UNTW) per Pair			UENTW	UENPP	0.53	23.51	23.51								
	Network Interface Device (NID)																
		Network Interface Device (NID) - 1-2 lines			UENTW	UND12		73.53	49.47								
		Network Interface Device (NID) - 1-6 lines			UENTW	UND16		115.96	91.91								
		Network Interface Device Cross Connect - 2 W			UENTW	UNDC2		8.56	8.56								
		Network Interface Device Cross Connect - 4W			UENTW	UNDC4		8.56	8.56								
UNE OTHER, PROVISIONING ONLY - NO RATE																	
		NID - Dispatch and Service Order for NID installation			UENTW	UNDBX	0.00	0.00									
		UNTW Circuit Id Establishment, Provisioning Only - No Rate			UENTW	UENCE	0.00	0.00									
		Unbundled Contract Name, Provisioning Only - No Rate			UEANL,UEF,UEQ,UENTW	UNECN	0.00	0.00									
UNE OTHER, PROVISIONING ONLY - NO RATE																	

UNBUNDLED NETWORK ELEMENTS - Kentucky														Attachment: 2		Exhibit: A	
CATEGORY		RATE ELEMENTS	Interim	Zone	BCS	USOC	RATES ($)					Svc Order Submitted Elec per LSR	Svc Order Submitted Manually per LSR	Incremental Charge - Manual Svc Order vs. Electronic-1st	Incremental Charge - Manual Svc Order vs. Electronic-Add'l	Incremental Charge - Manual Svc Order vs. Electronic-Disc 1st	Incremental Charge - Manual Svc Order vs. Electronic-Disc Add'l
							Rec	Nonrecurring		Nonrecurring Disconnect		OSS Rates ($)					
								First	Add'l	First	Add'l	SOMEC	SOMAN	SOMAN	SOMAN	SOMAN	SOMAN
		Unbundled Contact Name, Provisioning Only - no rate			UAL,UCL,UDC,UDL, UDN,UEA,UHL,ULC	UNECN	0.00	0.00									
		Unbundled Sub-Loop Feeder-2 Wire Cross Box Jumper - no rate			UEA,UDN,UCL,UDC	USBFQ	0.00	0.00									
		Unbundled Sub-Loop Feeder-4 Wire Cross Box Jumper - no rate			UEA,USL,UCL,UDL	USBFR	0.00	0.00									
		Unbundled DS1 Loop - Superframe Format Option - no rate			USL	CCOSF	0.00	0.00									
		Unbundled DS1 Loop - Expanded Superframe Format option - no rate			USL	CCOEF	0.00	0.00									
HIGH CAPACITY UNBUNDLED LOCAL LOOP																	
		High Capacity Unbundled Local Loop - DS3 - Per Mile per month			UE3	1L5ND	9.25										
		High Capacity Unbundled Local Loop - DS3 - Facility Termination per month			UE3	UE3PX	308.31	551.38	338.08	173.00	120.42						
		High Capacity Unbundled Local Loop - STS-1 - Per Mile per month			UDLSX	1L5ND	9.25										
		High Capacity Unbundled Local Loop - STS-1 - Facility Termination per month			UDLSX	UDLS1	320.51	551.38	338.08	173.00	120.42						
LOOP MAKE-UP																	
		Loop Makeup - Preordering Without Reservation, per working or spare facility queried (Manual).			UMK	UMKLW		23.40	23.40								
		Loop Makeup - Preordering With Reservation, per spare facility queried (Manual).			UMK	UMKLP		24.85	24.85								
		Loop Makeup--With or Without Reservation, per working or spare facility queried (Mechanized)			UMK	UMKMQ		0.67	0.67								
LINE SHARING AND LINE SPLITTING																	
	NOTE 1: The Line Sharing monthly recurring rates for all installations completed from October 02, 2003 through midnight October 01, 2004 shall be billed as follows:																
	NOTE 1: 10/02/2003 – 10/01/2004: 25% of the rate for an unbundled copper loop non-designed ("UCLND")																
	NOTE 1: 10/02/2004 – 10/01/2005: 50% of the rate for UCLND																
	NOTE 1: 10/02/2005 – 10/01/2006: 75% of the rate for UCLND																
	NOTE 1: Above will apply to USOCS: ULSDT and ULSCT																
	****NOTE 2: The Line Sharing monthly recurring rates with USOCs ULSDC and ULSCC applies only to circuits installed and inservice on or before October 1, 2003**																
	LINE SHARING																
	SPLITTERS-CENTRAL OFFICE BASED																
		Line Sharing Splitter, per System 96 Line Capacity			ULS	ULSDA	198.83	379.05	0.00	358.55	0.00						
		Line Sharing Splitter, per System 24 Line Capacity			ULS	ULSDB	49.71	379.05	0.00	358.55	0.00						
		Line Sharing Splitter, Per System, 8 Line Capacity			ULS	ULSD8	16.94	377.71	0.00	357.29	0.00						
		Line Sharing-DLEC Owned Splitter in CO-CFA activaton-deactivation (per LSOD)			ULS	ULSDG		173.62	0.00	100.40	0.00						
	END USER ORDERING-CENTRAL OFFICE BASED LINE SHARING																
		Line Sharing - per Line Activation (BST Owned splitter) - OBSOLETE see **NOTE 2			ULS	ULSDC	0.61	37.16	21.28	20.17	9.90						
		Line Share Service, TRO per line activation, BST owned splitter - Central Office Located (25% of UCLND) - please see NOTE 1 (E:10/2/2003)			ULS	ULSDT	2.65	37.16	21.28	20.17	9.90						
		Line Share Service, TRO per line activation, BST owned splitter - Central Office Located (50% of UCLND) - please see NOTE 1 (E:10/2/2004)			ULS	ULSDT	5.29	37.16	21.28	20.17	9.90						
		Line Share Service, TRO per line activation, BST owned splitter - Central Office Located (75% of UCLND) - please see NOTE 1 (E:10/2/2005)			ULS	ULSDT	7.94	37.16	21.28	20.17	9.90						
		Line Sharing - per Subsequent Activity per Line Rearrangement(BST Owned Splitter)			ULS	ULSDS		32.90	16.43								
		Line Sharing - per Subsequent Activity per Line Rearrangement(DLEC Owned Splitter)			ULS	ULSCS		32.90	16.43								
		Line Sharing - per Line Activation (DLEC owned Splitter) - OBSOLETE see **NOTE 2			ULS	ULSCC	0.61	47.44	19.31	20.67	12.74						

UNBUNDLED NETWORK ELEMENTS - Kentucky														Attachment: 2		Exhibit: A	
CATEGORY		RATE ELEMENTS	Interim	Zone	BCS	USOC	RATES ($)					Svc Order Submitted Elec per LSR	Svc Order Submitted Manually per LSR	Incremental Charge - Manual Svc Order vs. Electronic-1st	Incremental Charge - Manual Svc Order vs. Electronic-Add'l	Incremental Charge - Manual Svc Order vs. Electronic-Disc 1st	Incremental Charge - Manual Svc Order vs. Electronic-Disc Add'l
							Rec	Nonrecurring		Nonrecurring Disconnect		OSS Rates ($)					
								First	Add'l	First	Add'l	SOMEC	SOMAN	SOMAN	SOMAN	SOMAN	SOMAN
		Line Share Service, TRO per line activation, CLEC owned splitter - Central Office Located (25% of UCLND) - please see NOTE 1 (E:10/2/2003)			ULS	ULSCT	2.65	47.44	19.31	20.67	12.74						
		Line Share Service, TRO per line activation, CLEC owned splitter - Central Office Located (50% of UCLND) - please see NOTE 1 (E:10/2/2004)			ULS	ULSCT	5.29	47.44	19.31	20.67	12.74						
		Line Share Service, TRO per line activation, CLEC owned splitter - Central Office Located (75% of UCLND) - please see NOTE 1 (E:10/2/2005)			ULS	ULSCT	7.94	47.44	19.31	20.67	12.74						
	LINE SPLITTING																
	END USER ORDERING-CENTRAL OFFICE BASED																
		Line Splitting - per line activation DLEC owned splitter			UEPSR UEPSB	UREOS	0.61										
		Line Splitting - per line activation BST owned - physical			UEPSR UEPSB	UREBP	0.61	37.02	21.20	21.10	9.87						
		Line Splitting - per line activation BST owned - virtual			UEPSR UEPSB	UREBV	0.61	37.02	21.20	21.10	9.87						
	MAINTENANCE																
		No Trouble Found - per 1/2 hour increments - Basic						80.00	55.00								
		No Trouble Found - per 1/2 hour increments - Overtime						120.00	82.50								
		No Trouble Found - per 1/2 hour increments - Premium						160.00	110.00								
UNBUNDLED DEDICATED TRANSPORT																	
	INTEROFFICE CHANNEL - DEDICATED TRANSPORT																
		Interoffice Channel - Dedicated Transport - 2-Wire Voice Grade - Per Mile per month			U1TVX	1L5XX	0.01										
		Interoffice Channel - Dedicated Transport- 2- Wire Voice Grade - Facility Termination			U1TVX	U1TV2	29.11	47.34	31.78	22.77	8.75						
		Interoffice Channel - Dedicated Transpor t- 2-Wire Voice Grade Rev Bat. - Per Mile per month			U1TVX	1L5XX	0.01										
		Interoffice Channel - Dedicated Transport- 2- Wire VG Rev Bat. - Facility Termination			U1TVX	U1TR2	29.11	47.34	31.78	22.77	8.75						
		Interoffice Channel - Dedicated Transport - 4-Wire Voice Grade - Per Mile per month			U1TVX	1L5XX	0.01										
		Interoffice Channel - Dedicated Transport - 4- Wire Voice Grade - Facility Termination			U1TVX	U1TV4	25.86	47.34	31.78	22.77	8.75						
		Interoffice Channel - Dedicated Transport - 56 kbps - per mile per month			U1TDX	1L5XX	0.0115										
		Interoffice Channel - Dedicated Transport - 56 kbps - Facility Termination			U1TDX	U1TD5	20.97	47.35	31.78	22.77	8.75						
		Interoffice Channel - Dedicated Transport - 64 kbps - per mile per month			U1TDX	1L5XX	0.0115										
		Interoffice Channel - Dedicated Transport - 64 kbps - Facility Termination			U1TDX	U1TD6	20.97	47.35	31.78	22.77	8.75						
		Interoffice Channel - Dedicated Channel - DS1 - Per Mile per month			U1TD1	1L5XX	0.23										
		Interoffice Channel - Dedicated Tranport - DS1 - Facility Termination			U1TD1	U1TF1	96.04	105.52	98.46	23.09	20.49						
		Interoffice Channel - Dedicated Transport - DS3 - Per Mile per month			U1TD3	1L5XX	4.97										
		Interoffice Channel - Dedicated Transport - DS3 - Facility Termination per month			U1TD3	U1TF3	1,175.15	335.40	219.24	89.57	87.75						
		Interoffice Channel - Dedicated Transport - STS-1 - Per Mile per month			U1TS1	1L5XX	4.97										
		Interoffice Channel - Dedicated Transport - STS-1 - Facility Termination			U1TS1	U1TFS	1,149.51	335.40	219.24	89.57	87.75						
DARK FIBER																	
		Dark Fiber, Four Fiber Strands, Per Route Mile or Fraction Thereof per month - Interoffice Channel			UDF, UDFCX	1L5DF	30.74										
		NRC Dark Fiber - Interoffice Channel			UDF, UDFCX	UDF14		732.53	192.67	377.27	241.67						
		Dark Fiber, Four Fiber Strands, Per Route Mile or Fraction Thereof per month - Local Loop			UDF, UDFCX	1L5DL	47.01										
		NRC Dark Fiber - Local Loop			UDF, UDFCX	UDFL4		732.53	192.67	377.27	241.67						

UNBUNDLED NETWORK ELEMENTS - Kentucky														Attachment: 2		Exhibit: A	
CATEGORY		RATE ELEMENTS	Interim	Zone	BCS	USOC	RATES ($)					Svc Order Submitted Elec per LSR	Svc Order Submitted Manually per LSR	Incremental Charge - Manual Svc Order vs. Electronic-1st	Incremental Charge - Manual Svc Order vs. Electronic-Add'l	Incremental Charge - Manual Svc Order vs. Electronic-Disc 1st	Incremental Charge - Manual Svc Order vs. Electronic-Disc Add'l
							Rec	Nonrecurring		Nonrecurring Disconnect		OSS Rates ($)					
								First	Add'l	First	Add'l	SOMEC	SOMAN	SOMAN	SOMAN	SOMAN	SOMAN
8XX ACCESS TEN DIGIT SCREENING																	
		8XX Access Ten Digit Screening, Per Call			OHD		0.0006478										
		8XX Access Ten Digit Screening, Reservation Charge Per 8XX Number Reserved			OHD	N8R1X		4.14	0.70								
		8XX Access Ten Digit Screening, Per 8XX No. Established W/O POTS Translations			OHD			8.78	1.18	7.08	0.86						
		8XX Access Ten Digit Screening, Per 8XX No. Established With POTS Translations			OHD	N8FTX		8.78	1.18	7.08	0.86						
		8XX Access Ten Digit Screening, Customized Area of Service Per 8XX Number			OHD	N8FCX		4.14	2.07								
		8XX Access Ten Digit Screening, Multiple InterLATA CXR Routing Per CXR Requested Per 8XX No.			OHD	N8FMX		4.85	2.78								
		8XX Access Ten Digit Screening, Change Charge Per Request			OHD	N8FAX		4.85	0.70								
		8XX Access Ten Digit Screening, Call Handling and Destination Features			OHD	N8FDX		4.14	4.14								
		8XX Access Ten Digit Screening w/ 8FL No. Delivery,			OHD		0.0006478										
		8XX Access Ten Digit Screening, w/ POTS No. Delivery,			OHD		0.0006478										
LINE INFORMATION DATA BASE ACCESS (LIDB)																	
		LIDB Common Transport Per Query			OQT		0.000023										
		LIDB Validation Per Query			OQU		0.0137322										
		LIDB Originating Point Code Establishment or Change			OQT, OQU	NRBPX		55.12		67.59							
SIGNALING (CCS7)																	
		CCS7 Signaling Connection, Per 56 Kbps Facility			UDB	TPP++	20.71	43.56	43.56	22.45	22.45						
		CCS7 Signaling Termination, Per STP Port			UDB	PT8SX	151.39										
		CCS7 Signaling Usage, Per TCAP Message			UDB		0.0000656										
		CCS7 Signaling Connection, Per link (A link)			UDB	TPP++	20.71	43.56	43.56	22.45	22.45						
		CCS7 Signaling Connection, Per link (B link) (also known as D link)			UDB	TPP++	20.71	43.56	43.56	22.45	22.45						
		CCS7 Signaling Usage, Per ISUP Message			UDB		0.0000164										
		CCS7 Signaling Usage Surrogate, per link per LATA			UDB	STU56	751.08										
		CCS7 Signaling Point Code, per Originating Point Code Establishment or Change, per STP affected			UDB	CCAPO		46.02	46.02	56.43	56.43						
		CCS7 Signaling Point Code, per Destination Point Code Establishment or Change, Per Stp Affected			UDB	CCAPD		46.02	46.02	56.43	56.43						
E911 SERVICE																	
		Local Channel - Dedicated - 2-wr Voice Grade					18.57	265.78	46.96	46.79	4.98						
		Interoffice Transport - Dedicated - 2-wr Voice Grade Per Mile					0.0115										
		Interoffice Transport - Dedicated - 2-wr Voice Grade Per Facility Termination					29.11	47.34	31.78	22.77	8.75						
		Local Channel - Dedicated - DS1 - Zone 1					40.46	209.60	176.51	30.21	21.07						
		Local Channel - Dedicated - DS1 - Zone 2					43.39	209.60	176.51	30.21	21.07						
		Local Channel - Dedicated - DS1 - Zone 3					164.50	209.60	176.51	30.21	21.07						
		Interoffice Transport - Dedicated - DS1 Per Mile					0.23										
		Interoffice Transport - Dedicated - DS1 Per Facility Termination					96.04	105.52	98.46	23.09	20.49						
CALLING NAME (CNAM) SERVICE																	
		CNAM For DB Owners - Service Establishment			OQV			25.34	25.34	23.30	23.30						
		CNAM For Non DB Owners - Service Establishment			OQV			25.34	25.34	23.30	23.30						
		CNAM For DB Owners - Service Provisioning With Point Code Establishment			OQV			1,591.54	1,177.08	431.95	317.61						
		CNAM For Non DB Owners - Service Provisioning With Point Code Establishment			OQV			546.40	393.74	438.93	317.61						
		CNAM for DB Owners, Per Query			OQV		0.0010348										
		CNAM for Non DB Owners, Per Query			OQV		0.0010348										
		CNAM (Non-Databs Owner), NRC, applies when using the Character Based User Interface (CHUI)			OQV	CDDCH		595.00	595.00								
SELECTIVE ROUTING																	
		Selective Routing Per Unique Line Class Code Per Request Per Switch						93.53	93.53	15.58	15.58						

UNBUNDLED NETWORK ELEMENTS - Kentucky														Attachment: 2		Exhibit: A	
CATEGORY		RATE ELEMENTS	Interim	Zone	BCS	USOC	RATES ($)					Svc Order Submitted Elec per LSR	Svc Order Submitted Manually per LSR	Incremental Charge - Manual Svc Order vs. Electronic-1st	Incremental Charge - Manual Svc Order vs. Electronic-Add'l	Incremental Charge - Manual Svc Order vs. Electronic-Disc 1st	Incremental Charge - Manual Svc Order vs. Electronic-Disc Add'l
							Rec	Nonrecurring		Nonrecurring Disconnect		OSS Rates ($)					
								First	Add'l	First	Add'l	SOMEC	SOMAN	SOMAN	SOMAN	SOMAN	SOMAN
VIRTUAL COLLOCATION																	
		Virtual Collocation-2 Wire Cross Connects (Loop) for Line Splitting			UEPSR UEPSB	VE1LS	0.0309	24.68	23.68	12.14	10.95						
PHYSICAL COLLOCATION																	
		Physical Collocation-2 Wire Cross Connects (Loop) for Line Splitting			UEPSR UEPSB	PE1LS	0.0333	24.68	23.68	12.14	10.95						
AIN SELECTIVE CARRIER ROUTING																	
		Regional Service Establishment			SRC	SRCEC		193,401.00	193,401.00	9,483.34	9,483.34						
		End Office Establishment			SRC	SRCEO		194.09	194.09	0.85	0.85						
		Line/Port NRC, per end user			SRC	SRCLP		2.06	2.06								
		Query NRC, per query			SRC		0.0037502										
AIN - BELLSOUTH AIN SMS ACCESS SERVICE																	
		AIN SMS Access Service - Service Establishment, Per State, Initial Setup			A1N	CAMSE		43.55	43.55	44.93	44.93						
		AIN SMS Access Service - Port Connection - Dial/Shared Access			A1N	CAMDP		8.64	8.64	10.03	10.03						
		AIN SMS Access Service - Port Connection - ISDN Access			A1N	CAM1P		8.64	8.64	10.03	10.03						
		AIN SMS Access Service - User Identification Codes - Per User ID Code			A1N	CAMAU		38.65	38.65	29.88	29.88						
		AIN SMS Access Service - Security Card, Per User ID Code, Initial or Replacement			A1N	CAMRC		75.08	75.08	12.93	12.93						
		AIN SMS Access Service - Storage, Per Unit (100 Kilobytes)					0.0025										
		AIN SMS Access Service - Session, Per Minute					0.666										
		AIN SMS Access Service - Company Performed Session, Per Minute					0.4608										
AIN - BELLSOUTH AIN TOOLKIT SERVICE																	
		AIN Toolkit Service - Service Establishment Charge, Per State, Initial Setup			CAM	BAPSC		43.55	43.55	44.93	44.93						
		AIN Toolkit Service - Training Session, Per Customer				BAPVX		8,436.93	8,436.93								
		AIN Toolkit Service - Trigger Access Charge, Per Trigger, Per DN, Term. Attempt				BAPTT		8.64	8.64	10.03	10.03						
		AIN Toolkit Service - Trigger Access Charge, Per Trigger, Per DN, Off-Hook Delay				BAPTD		8.64	8.64	10.03	10.03						
		AIN Toolkit Service - Trigger Access Charge, Per Trigger, Per DN, Off-Hook Immediate				BAPTM		8.64	8.64	10.03	10.03						
		AIN Toolkit Service - Trigger Access Charge, Per Trigger, Per DN, 10-Digit PODP				BAPTO		51.01	51.01	18.50	18.50						
		AIN Toolkit Service - Trigger Access Charge, Per Trigger, Per DN, CDP				BAPTC		51.01	51.01	18.50	18.50						
		AIN Toolkit Service - Trigger Access Charge, Per Trigger, Per DN, Feature Code				BAPTF		51.01	51.01	18.50	18.50						
		AIN Toolkit Service - Query Charge, Per Query					0.0549207										
		AIN Toolkit Service - Type 1 Node Charge, Per AIN Toolkit Subscription, Per Node, Per Query					0.0066492										
		AIN Toolkit Service - SCP Storage Charge, Per SMS Access Account, Per 100 Kilobytes					0.07										
		AIN Toolkit Service - Monthly report - Per AIN Toolkit Service Subscription			CAM	BAPMS	7.87	8.64	8.64	6.08	6.08						
		AIN Toolkit Service - Special Study - Per AIN Toolkit Service Subscription			CAM	BAPLS	3.26	9.56	9.56								
		AIN Toolkit Service - Call Event Report - Per AIN Toolkit Service Subscription			CAM	BAPDS	4.72	8.64	8.64	6.08	6.08						
		AIN Toolkit Service - Call Event Special Study - Per AIN Toolkit Service Subscription			CAM	BAPES	0.11	9.56	9.56								
ENHANCED EXTENDED LINK (EELs)																	
	NOTE: The monthly recurring and non-recurring charges below will apply and the Switch-As-Is Charge will not apply for UNE combinations provisioned as ' Ordinarily Combined' Network Elements.																
	NOTE: The monthly recurring and the Switch-As-Is Charge and not the non-recurring charges below will apply for UNE combinations provisioned as ' Currently Combined' Network Elements.																
	EXTENTED 2-WIRE VOICE GRADE EXTENDED LOOP WITH DEDICATED DS1 INTEROFFICE TRANSPORT																
		First 2-Wire VG Loop (SL2) in Combination - Zone 1		1	UNCVX	UEAL2	12.67	125.22	60.48	59.69	7.84						

UNBUNDLED NETWORK ELEMENTS - Kentucky														Attachment: 2		Exhibit: A	
CATEGORY		RATE ELEMENTS	Interim	Zone	BCS	USOC	RATES ($)					Svc Order Submitted Elec per LSR	Svc Order Submitted Manually per LSR	Incremental Charge - Manual Svc Order vs. Electronic-1st	Incremental Charge - Manual Svc Order vs. Electronic-Add'l	Incremental Charge - Manual Svc Order vs. Electronic-Disc 1st	Incremental Charge - Manual Svc Order vs. Electronic-Disc Add'l
							Rec	Nonrecurring		Nonrecurring Disconnect		OSS Rates ($)					
								First	Add'l	First	Add'l	SOMEC	SOMAN	SOMAN	SOMAN	SOMAN	SOMAN
		First 2-Wire VG Loop (SL2) in Combination - Zone 2		2	UNCVX	UEAL2	17.45	125.22	60.48	59.69	7.84						
		First 2-Wire VG Loop (SL2) in Combination - Zone 3		3	UNCVX	UEAL2	33.22	125.22	60.48	59.69	7.84						
		Interoffice Transport - Dedicated - DS1 combination - Per Mile per month			UNC1X	1L5XX	0.19										
		Interoffice Transport - Dedicated - DS1 combination - Facility Termination per month			UNC1X	U1TF1	79.02	181.24	123.53	56.72	22.32						
		1/0 Channelization System in combination Per Month			UNC1X	MQ1	113.33	57.26	14.74	1.86	1.67						
		Voice Grade COCI - Per Month			UNCVX	1D1VG	0.62	6.71	4.84								
		Each Additional 2-Wire VG Loop (SL 2) in Combination - Zone 1		1	UNCVX	UEAL2	12.67	125.22	60.48	59.69	7.84						
		Each Additional 2-Wire VG Loop (SL 2) in Combination - Zone 2		2	UNCVX	UEAL2	17.45	125.22	60.48	59.69	7.84						
		Each Additional 2-Wire VG Loop (SL 2) in Combination - Zone 3		3	UNCVX	UEAL2	33.22	125.22	60.48	59.69	7.84						
		Voice Grade COCI - Per Month			UNCVX	1D1VG	0.62	6.71	4.84								
		Nonrecurring Currently Combined Network Elements Switch -As-Is Charge			UNC1X	UNCCC		8.98	8.98	11.17	11.17						
	EXTENDED 4-WIRE VOICE GRADE EXTENDED LOOP WITH DEDICATED DS1 INTEROFFICE TRANSPORT																
		First 4-Wire Analog Voice Grade Loop in Combination - Zone 1		1	UNCVX	UEAL4	29.26	125.22	60.48	59.69	7.84						
		First 4-Wire Analog Voice Grade Loop in Combination - Zone 2		2	UNCVX	UEAL4	34.25	125.22	60.48	59.69	7.84						
		First 4-Wire Analog Voice Grade Loop in Combination - Zone 3		3	UNCVX	UEAL4	85.06	125.22	60.48	59.69	7.84						
		Interoffice Transport - Dedicated - DS1 combination - Per Mile Per Month			UNC1X	1L5XX	0.19										
		Interoffice Transport - Dedicated - DS1 - Facility Termination Per Month			UNC1X	U1TF1	79.02	181.24	123.53	56.72	22.32						
		1/0 Channel System in combination Per Month			UNC1X	MQ1	113.33	57.26	14.74	1.86	1.67						
		Voice Grade COCI in combination - per month			UNCVX	1D1VG	0.62	6.71	4.84								
		Additional 4-Wire Analog Voice Grade Loop in same DS1 Interoffice Transport Combination - Zone 1		1	UNCVX	UEAL4	29.26	125.22	60.48	59.69	7.84						
		Additional 4-Wire Analog Voice Grade Loop in same DS1 Interoffice Transport Combination - Zone 2		2	UNCVX	UEAL4	34.25	125.22	60.48	59.69	7.84						
		Additional 4-Wire Analog Voice Grade Loop in same DS1 Interoffice Transport Combination - Zone 3		3	UNCVX	UEAL4	85.06	125.22	60.48	59.69	7.84						
		Additional Voice Grade COCI in combination - per month			UNCVX	1D1VG	0.62	6.71	4.84								
		Nonrecurring Currently Combined Network Elements Switch -As-Is Charge			UNC1X	UNCCC		8.98	8.98	11.17	11.17						
	EXTENDED 4-WIRE 56 KBPS EXTENDED DIGITAL LOOP WITH DEDICATED DS1 INTEROFFICE TRANSPORT																
		First 4-Wire 56Kbps Digital Grade Loop in Combination - Zone 1		1	UNCDX	UDL56	27.59	125.22	60.48	59.69	7.84						
		First 4-Wire 56Kbps Digital Grade Loop in Combination - Zone 2		2	UNCDX	UDL56	32.48	125.22	60.48	59.69	7.84						
		First 4-Wire 56Kbps Digital Grade Loop in Combination - Zone 3		3	UNCDX	UDL56	36.37	125.22	60.48	59.69	7.84						
		Interoffice Transport - Dedicated - DS1 combination - Per Mile Per Month			UNC1X	1L5XX	0.19										
		Interoffice Transport - Dedicated - DS1 - combination Facility Termination Per Month			UNC1X	U1TF1	79.02	181.24	123.53	56.72	22.32						
		1/0 Channel System in combination Per Month			UNC1X	MQ1	113.33	57.26	14.74	1.86	1.67						
		OCU-DP COCI (data) per month (2.4-64kbs)			UNCDX	1D1DD	1.32	6.71	4.84								
		Additional 4-Wire 56Kbps Digital Grade Loop in same DS1 Interoffice Transport Combination - Zone 1		1	UNCDX	UDL56	27.59	125.22	60.48	59.69	7.84						
		Additional 4-Wire 56Kbps Digital Grade Loop in same DS1 Interoffice Transport Combination - Zone 2		2	UNCDX	UDL56	32.48	125.22	60.48	59.69	7.84						
		Additional 4-Wire 56Kbps Digital Grade Loop in same DS1 Interoffice Transport Combination - Zone 3		3	UNCDX	UDL56	36.37	125.22	60.48	59.69	7.84						

UNBUNDLED NETWORK ELEMENTS - Kentucky														Attachment: 2		Exhibit: A	
CATEGORY		RATE ELEMENTS	Interim	Zone	BCS	USOC	RATES ($)					Svc Order Submitted Elec per LSR	Svc Order Submitted Manually per LSR	Incremental Charge - Manual Svc Order vs. Electronic-1st	Incremental Charge - Manual Svc Order vs. Electronic-Add'l	Incremental Charge - Manual Svc Order vs. Electronic-Disc 1st	Incremental Charge - Manual Svc Order vs. Electronic-Disc Add'l
							Rec	Nonrecurring		Nonrecurring Disconnect		OSS Rates ($)					
								First	Add'l	First	Add'l	SOMEC	SOMAN	SOMAN	SOMAN	SOMAN	SOMAN
		Additional OCU-DP COCI (data) - in combination per month (2.4-64kbs)			UNCDX	1D1DD	1.32	6.71	4.84								
		Nonrecurring Currently Combined Network Elements Switch -As-Is Charge			UNC1X	UNCCC		8.98	8.98	11.17	11.17						
	EXTENDED 4-WIRE 64 KBPS EXTENDED DIGITAL LOOP WITH DEDICATED DS1 INTEROFFICE TRANSPORT																
		First 4-Wire 64Kbps Digital Grade Loop in Combination - Zone 1		1	UNCDX	UDL64	27.59	125.22	60.48	59.69	7.84						
		First 4-Wire 64Kbps Digital Grade Loop in Combination - Zone 2		2	UNCDX	UDL64	32.48	125.22	60.48	59.69	7.84						
		First 4-Wire 64Kbps Digital Grade Loop in Combination - Zone 3		3	UNCDX	UDL64	36.37	125.22	60.48	59.69	7.84						
		Interoffice Transport - Dedicated - DS1 combination - Per Mile Per Month			UNC1X	1L5XX	0.19										
		interoffice Transport - Dedicated - DS1 combination - Facility Termination Per Month			UNC1X	U1TF1	79.02	181.24	123.53	56.72	22.32						
		1/0 Channel System in combination Per Month			UNC1X	MQ1	113.33	57.26	14.74	1.86	1.67						
		OCU-DP COCI (data) - in combination - per month (2.4-64kbs)			UNCDX	1D1DD	1.32	6.71	4.84								
		Additional 4-Wire 64Kbps Digital Grade Loop in same DS1 Interoffice Transport Combination - Zone 1		1	UNCDX	UDL64	27.59	125.22	60.48	59.69	7.84						
		Additional 4-Wire 64Kbps Digital Grade Loop in same DS1 Interoffice Transport Combination - Zone 2		2	UNCDX	UDL64	32.48	125.22	60.48	59.69	7.84						
		Additional 4-Wire 64Kbps Digital Grade Loop in same DS1 Interoffice Transport Combination - Zone 3		3	UNCDX	UDL64	36.37	125.22	60.48	59.69	7.84						
		Additional OCU-DP COCI (data) - in combination - per month (2.4-64kbs)			UNCDX	1D1DD	1.32	6.71	4.84								
		Nonrecurring Currently Combined Network Elements Switch -As-Is Charge			UNC1X	UNCCC		8.98	8.98	11.17	11.17						
	EXTENDED 4-WIRE DS1 DIGITAL EXTENDED LOOP WITH DEDICATED DS1 INTEROFFICE TRANSPORT																
		4-Wire DS1 Digital Loop in Combination - Zone 1		1	UNC1X	USLXX	86.47	210.70	114.60	63.96	17.97						
		4-Wire DS1 Digital Loop in Combination - Zone 2		2	UNC1X	USLXX	114.10	210.70	114.60	63.96	17.97						
		4-Wire DS1 Digital Loop in Combination - Zone 3		3	UNC1X	USLXX	297.76	210.70	114.60	63.96	17.97						
		Interoffice Transport - Dedicated - DS1 combination - Per Mile Per Month			UNC1X	1L5XX	0.19										
		Interoffice Transport - Dedicated - DS1 combination - Facility Termination Per Month			UNC1X	U1TF1	79.02	181.24	123.53	56.72	22.32						
		Nonrecurring Currently Combined Network Elements Switch -As-Is Charge			UNC1X	UNCCC		8.98	8.98	11.17	11.17						
	EXTENDED 4-WIRE DS1 DIGITAL EXTENDED LOOP WITH DEDICATED DS3 INTEROFFICE TRANSPORT																
		First DS1Loop in Combination - Zone 1		1	UNC1X	USLXX	86.47	210.70	114.60	63.96	17.97						
		First DS1Loop in Combination - Zone 2		2	UNC1X	USLXX	114.10	210.70	114.60	63.96	17.97						
		First DS1Loop in Combination - Zone 3		3	UNC1X	USLXX	297.76	210.70	114.60	63.96	17.97						
		Interoffice Transport - Dedicated - DS3 combination - Per Mile Per Month			UNC3X	1L5XX	4.09										
		Interoffice Transport - Dedicated - DS3 - Facility Termination per month			UNC3X	U1TF3	966.89	350.56	141.58	48.00	23.39						
		3/1Channel System in combination per month			UNC3X	MQ3	158.20	115.48	56.53	15.12	5.30						
		DS1 COCI in combination per month			UNC1X	UC1D1	11.80	6.71	4.84								
		Additional DS1Loop in DS3 Interoffice Transport Combination - Zone 1		1	UNC1X	USLXX	86.47	210.70	114.60	63.96	17.97						
		Additional DS1Loop in DS3 Interoffice Transport Combination - Zone 2		2	UNC1X	USLXX	114.10	210.70	114.60	63.96	17.97						
		Additional DS1Loop in DS3 Interoffice Transport Combination - Zone 3		3	UNC1X	USLXX	297.76	210.70	114.60	63.96	17.97						
		Additoinal DS1 COCI in combination per month			UNC1X	UC1D1	11.80	6.71	4.84								
		Nonrecurring Currently Combined Network Elements Switch -As-Is Charge			UNC3X	UNCCC		8.98	8.98	11.17	11.17						
	EXTENDED 2-WIRE VOICE GRADE EXTENDED LOOP/ 2 WIRE VOICE GRADE INTEROFFICE TRANSPORT																
		2-WireVG Loop in combination - Zone 1		1	UNCVX	UEAL2	12.67	125.22	60.48	59.69	7.84						
		2-WireVG Loop in combination - Zone 2		2	UNCVX	UEAL2	17.45	125.22	60.48	59.69	7.84						

UNBUNDLED NETWORK ELEMENTS - Kentucky														Attachment: 2		Exhibit: A	
CATEGORY		RATE ELEMENTS	Interim	Zone	BCS	USOC	RATES ($)					Svc Order Submitted Elec per LSR	Svc Order Submitted Manually per LSR	Incremental Charge - Manual Svc Order vs. Electronic-1st	Incremental Charge - Manual Svc Order vs. Electronic-Add'l	Incremental Charge - Manual Svc Order vs. Electronic-Disc 1st	Incremental Charge - Manual Svc Order vs. Electronic-Disc Add'l
							Rec	Nonrecurring		Nonrecurring Disconnect		OSS Rates ($)					
								First	Add'l	First	Add'l	SOMEC	SOMAN	SOMAN	SOMAN	SOMAN	SOMAN
		2-WireVG Loop in combination - Zone 3		3	UNCVX	UEAL2	33.22	125.22	60.48	59.69	7.84						
		Interoffice Transport - 2-wire VG - Dedicated- Per Mile Per Month			UNCVX	1L5XX	0.01										
		Interoffice Transport - 2-wire VG - Dedicated - Facility Termination per month			UNCVX	U1TV2	23.95	98.09	53.67	56.31	22.42						
		Nonrecurring Currently Combined Network Elements Switch -As-Is Charge			UNCVX	UNCCC		8.98	8.98	11.17	11.17						
	EXTENDED 4-WIRE VOICE GRADE EXTENDED LOOP/ 4 WIRE VOICE GRADE INTEROFFICE TRANSPORT																
		4-WireVG Loop in combination - Zone 1		1	UNCVX	UEAL4	29.26	125.22	60.48	59.69	7.84						
		4-WireVG Loop in combination - Zone 2		2	UNCVX	UEAL4	34.25	125.22	60.48	59.69	7.84						
		4-WireVG Loop in combination - Zone 3		3	UNCVX	UEAL4	85.06	125.22	60.48	59.69	7.84						
		Interoffice Transport - 4-wire VG - Dedicated - Per Mile Per Month			UNCVX	1L5XX	0.01										
		Interoffice Transport - 4-wire VG - Dedicated - Facility Termination per month			UNCVX	U1TV4	21.28	98.09	53.67	56.31	22.42						
		Nonrecurring Currently Combined Network Elements Switch -As-Is Charge			UNCVX	UNCCC		8.98	8.98	11.17	11.17						
	EXTENDED DS3 DIGITAL EXTENDED LOOP WITH DEDICATED DS3 INTEROFFICE TRANSPORT																
		DS3 Local Loop in combination - per mile per month			UNC3X	1L5ND	9.25										
		DS3 Local Loop in combination - Facility Termination per month			UNC3X	UE3PX	308.31	237.36	147.69	83.43	32.67						
		Interoffice Transport - Dedicated - DS3 - Per Mile per month			UNC3X	1L5XX	4.09										
		Interoffice Transport - Dedicated - DS3 combination - Facility Termination per month			UNC3X	U1TF3	966.89	350.56	141.58	48.00	23.39						
		Nonrecurring Currently Combined Network Elements Switch -As-Is Charge			UNC3X	UNCCC		8.98	8.98	11.17	11.17						
	EXTENDED STS-1 DIGITAL EXTENDED LOOP WITH DEDICATED STS-1 INTEROFFICE TRANSPORT																
		STS-1 Local Lolp in combination - per mile per month			UNCSX	1L5ND	9.25										
		STS-1 Local Loop in combination - Facility Termination per month			UNCSX	UDLS1	320.51	237.36	147.69	83.43	32.67						
		Interoffice Transport - Dedicated - STS-1 combination - per mile per month			UNCSX	1L5XX	4.09										
		Interoffice Transport - Dedicated - STS-1 combination - Facility Termination per month			UNCSX	U1TFS	945.79	350.56	141.58	48.00	23.39						
		Nonrecurring Currently Combined Network Elements Switch -As-Is Charge			UNCSX	UNCCC		8.98	8.98	11.17	11.17						
	EXTENDED 2-WIRE ISDN EXTENDED LOOP WITH DS1 INTEROFFICE TRANSPORT																
		First 2-Wire ISDN Loop in Combination - Zone 1		1	UNCNX	U1L2X	18.44	125.22	60.48	59.69	7.84						
		First 2-Wire ISDN Loop in Combination - Zone 2		2	UNCNX	U1L2X	25.08	125.22	60.48	59.69	7.84						
		First 2-Wire ISDN Loop in Combination - Zone 3		3	UNCNX	U1L2X	42.87	125.22	60.48	59.69	7.84						
		Interoffice Transport - Dedicated - DS1 combination - per mile per month			UNC1X	1L5XX	0.19										
		Interoffice Transport - Dedicated - DS1 combination - Facility Termination per month			UNC1X	U1TF1	79.02	181.24	123.53	56.72	22.32						
		1/0 Channel System in combination - per month			UNC1X	MQ1	113.33	57.26	14.74	1.86	1.67						
		2-wire ISDN COCI (BRITE) - in combination - per month			UNCNX	UC1CA	2.84	6.71	4.84								
		Additional 2-wire ISDN Loop in same DS1Interoffice Transport Combination - Zone 1		1	UNCNX	U1L2X	18.44	125.22	60.48	59.69	7.84						
		Additional 2-wire ISDN Loop in same DS1Interoffice Transport Combination - Zone 2		2	UNCNX	U1L2X	25.08	125.22	60.48	59.69	7.84						
		Additional 2-wire ISDN Loop in same DS1Interoffice Transport Combination - Zone 3		3	UNCNX	U1L2X	42.87	125.22	60.48	59.69	7.84						
		Additional 2-wire ISDN COCI (BRITE) - in combination- per month			UNCNX	UC1CA	2.84	6.71	4.84								
		Nonrecurring Currently Combined Network Elements Switch -As-Is Charge			UNC1X	UNCCC		8.98	8.98	11.17	11.17						
	EXTENDED 4-WIRE DS1 DIGITAL EXTENDED LOOP WITH DEDICATED STS-1 INTEROFFICE TRANSPORT																
		First DS1 Loop Combination - Zone 1		1	UNC1X	USLXX	86.47	210.70	114.60	63.96	17.97						
		First DS1 Loop Combination - Zone 2		2	UNC1X	USLXX	114.10	210.70	114.60	63.96	17.97						

UNBUNDLED NETWORK ELEMENTS - Kentucky														Attachment: 2		Exhibit: A	
CATEGORY		RATE ELEMENTS	Interim	Zone	BCS	USOC	RATES ($)					Svc Order Submitted Elec per LSR	Svc Order Submitted Manually per LSR	Incremental Charge - Manual Svc Order vs. Electronic-1st	Incremental Charge - Manual Svc Order vs. Electronic-Add'l	Incremental Charge - Manual Svc Order vs. Electronic-Disc 1st	Incremental Charge - Manual Svc Order vs. Electronic-Disc Add'l
							Rec	Nonrecurring		Nonrecurring Disconnect		OSS Rates ($)					
								First	Add'l	First	Add'l	SOMEC	SOMAN	SOMAN	SOMAN	SOMAN	SOMAN
		First DS1 Loop Combination - Zone 3		3	UNC1X	USLXX	297.76	210.70	114.60	63.96	17.97						
		Interoffice Transport - Dedicated - STS-1 combination - Per Mile Per Month			UNCSX	1L5XX	4.09										
		Interoffice Transport - Dedicated - STS-1 combination - Facility Termination per month			UNCSX	U1TFS	945.79	350.56	141.58	48.00	23.39						
		3/1 Channel System in combination per month			UNCSX	MQ3	158.20	115.48	56.53	15.12	5.30						
		DS1 COCI in combination per month			UNC1X	UC1D1	11.80	6.71	4.84								
		Additional DS1Loop in the same STS-1 Interoffice Transport Combination - Zone 1		1	UNC1X	USLXX	86.47	210.70	114.60	63.96	17.97						
		Additional DS1Loop in the same STS-1 Interoffice Transport Combination - Zone 2		2	UNC1X	USLXX	114.10	210.70	114.60	63.96	17.97						
		Additional DS1Loop in the same STS-1 Interoffice Transport Combination - Zone 3		3	UNC1X	USLXX	297.76	210.70	114.60	63.96	17.97						
		DS1 COCI in combination per month			UNC1X	UC1D1	11.80	6.71	4.84								
		Nonrecurring Currently Combined Network Elements Switch -As-Is Charge			UNCSX	UNCCC		8.98	8.98	11.17	11.17						
	EXTENDED 4-WIRE 56 KBPS DIGITAL EXTENDED LOOP WITH 56 KBPS INTEROFFICE TRANSPORT																
		4-wire 56 kbps Local Loop in combination - Zone 1		1	UNCDX	UDL56	27.59	125.22	60.48	59.69	7.84						
		4-wire 56 kbps Local Loop in combination - Zone 2		2	UNCDX	UDL56	32.48	125.22	60.48	59.69	7.84						
		4-wire 56 kbps Local Loop in combination - Zone 3		3	UNCDX	UDL56	36.37	125.22	60.48	59.69	7.84						
		Interoffice Transport - Dedicated - 4-wire 56 kbps combination - Per Mile per month			UNCDX	1L5XX	0.01										
		Interoffice Transport - Dedicated - 4-wire 56 kbps combination - Facility Termination per month			UNCDX	U1TD5	17.25	98.09	53.67	56.31	22.42						
		Nonrecurring Currently Combined Network Elements Switch -As-Is Charge			UNCDX	UNCCC		8.98	8.98	11.17	11.17						
	EXTENDED 4-WIRE 64 KBPS DIGITAL EXTENDED LOOP WITH 64 KBPS INTEROFFICE TRANSPORT																
		4-wire 64 kbps Lcoal Loop in Combination - Zone 1		1	UNCDX	UDL64	27.59	125.22	60.48	59.69	7.84						
		4-wire 64 kbps Lcoal Loop in Combination - Zone 2		2	UNCDX	UDL64	32.48	125.22	60.48	59.69	7.84						
		4-wire 64 kbps Lcoal Loop in Combination - Zone 3		3	UNCDX	UDL64	36.37	125.22	60.48	59.69	7.84						
		Interoffice Transport - Dedicated - 4-wire 64 kbps combination - Per Mile per month			UNCDX	1L5XX	0.01										
		Interoffice Transport - Dedicated - 4-wire 64 kbps combination - Facility Termination per month			UNCDX	U1TD6	17.25	98.09	53.67	56.31	22.42						
		Nonrecurring Currently Combined Network Elements Switch -As-Is Charge			UNCDX	UNCCC		8.98	8.98	11.17	11.17						
	EXTENDED 2-WIRE VOICE GRADE LOOP WITH DS1 INTEROFFICE TRANSPORT w/ 3/1 MUX																
		First 2-wire VG Loop (SL2) in Combination - Zone 1		1	UNCVX	UEAL2	12.67	125.22	60.48	59.69	7.84						
		First 2-wire VG Loop (SL2) in Combination - Zone 2		2	UNCVX	UEAL2	17.45	125.22	60.48	59.69	7.84						
		First 2-wire VG Loop (SL2) in Combination - Zone 3		3	UNCVX	UEAL2	33.22	125.22	60.48	59.69	7.84						
		First Interoffice Transport - Dedicated - DS1 combination - Per Mile			UNC1X	1L5XX	0.19										
		First Interoffice Transport - Dedicated - DS1 combination - Facility Termination per month			UNC1X	U1TF1	79.02	181.24	123.53	56.72	22.32						
		Per each DS1 Channelization System Per Month			UNC1X	MQ1	113.33	57.26	14.74	1.86	1.67						
		Per each Voice Grade COCI - Per Month per month			UNCVX	1D1VG	0.62	6.71	4.84								
		3/1 Channel System in combination per month			UNC3X	MQ3	158.20	115.48	56.53	15.12	5.30						
		Per each DS1 COCI in combination per month			UNC1X	UC1D1	11.80	6.71	4.84								
		Each Additional 2-Wire VG Loop(SL 2) in the same DS1 Interoffice Transport Combination - Zone 1		1	UNCVX	UEAL2	12.67	125.22	60.48	59.69	7.84						
		Each Additional 2-Wire VG Loop(SL2) in the same DS1 Interoffice Transport Combination - Zone 2		2	UNCVX	UEAL2	17.45	125.22	60.48	59.69	7.84						
		Each Additional 2-Wire VG Loop(SL2) in the same DS1 Interoffice Transport Combination - Zone 3		3	UNCVX	UEAL2	33.22	125.22	60.48	59.69	7.84						
		Each Additional Voice Grade COCI in combination - per month			UNCVX	1D1VG	0.62	6.71	4.84								
		Each Additional DS1 Interoffice Channel per mile in same 3/1 Channel System per month			UNC1X	1L5XX	0.19										
		Each Additional DS1 Interoffice Channel Facility Termination in same 3/1 Channel System per month			UNC1X	U1TF1	79.02	181.24	123.53	56.72	22.32						

UNBUNDLED NETWORK ELEMENTS - Kentucky														Attachment: 2		Exhibit: A	
CATEGORY		RATE ELEMENTS	Interim	Zone	BCS	USOC	RATES ($)					Svc Order Submitted Elec per LSR	Svc Order Submitted Manually per LSR	Incremental Charge - Manual Svc Order vs. Electronic-1st	Incremental Charge - Manual Svc Order vs. Electronic-Add'l	Incremental Charge - Manual Svc Order vs. Electronic-Disc 1st	Incremental Charge - Manual Svc Order vs. Electronic-Disc Add'l
							Rec	Nonrecurring		Nonrecurring Disconnect		OSS Rates ($)					
								First	Add'l	First	Add'l	SOMEC	SOMAN	SOMAN	SOMAN	SOMAN	SOMAN
		Each Additional DS1 COCI combination per month			UNC1X	UC1D1	11.80	6.71	4.84								
		Nonrecurring Currently Combined Network Elements Switch -As-Is Charge			UNC1X	UNCCC		8.98	8.98	11.17	11.17						
	EXTENDED 4-WIRE VOICE GRADE LOOP WITH DEDICATED DS1 INTEROFFICE TRANSPORT w/ 3/1 MUX																
		First 4-Wire Analog Voice Grade Local Loop in Combination - Zone 1		1	UNCVX	UEAL4	29.26	125.22	60.48	59.69	7.84						
		First 4-Wire Analog Voice Grade Local Loop in Combination - Zone 2		2	UNCVX	UEAL4	34.25	125.22	60.48	59.69	7.84						
		First 4-Wire Analog Voice Grade Local Loop in Combination - Zone 3		3	UNCVX	UEAL4	85.06	125.22	60.48	59.69	7.84						
		First Interoffice Transport - Dedicated - DS1 combination - Per Mile Per Month			UNC1X	1L5XX	0.19										
		First Interoffice Transport - Dedicated - DS1 - Facility Termination Per Month			UNC1X	U1TF1	79.02	181.24	123.53	56.72	22.32						
		Per each 1/0 Channel System in combination Per Month			UNC1X	MQ1	113.33	57.26	14.74	1.86	1.67						
		Per each Voice Grade COCI in combination - per month			UNCVX	1D1VG	0.62	6.71	4.84								
		3/1 Channel System in combination per month			UNC3X	MQ3	158.20	115.48	56.53	15.12	5.30						
		Per each DS1 COCI in combination per month			UNC1X	UC1D1	11.80	6.71	4.84								
		Additional 4-Wire Analog Voice Grade Loop in same DS1 Interoffice Transport Combination - Zone 1		1	UNCVX	UEAL4	29.26	125.22	60.48	59.69	7.84						
		Additional 4-Wire Analog Voice Grade Loop in same DS1 Interoffice Transport Combination - Zone 2		2	UNCVX	UEAL4	34.25	125.22	60.48	59.69	7.84						
		Additional 4-Wire Analog Voice Grade Loop in same DS1 Interoffice Transport Combination - Zone 3		3	UNCVX	UEAL4	85.06	125.22	60.48	59.69	7.84						
		Each Additional DS1 Interoffice Channel per mile in same 3/1 Channel System per month			UNC1X	1L5XX	0.19										
		Each Additional DS1 Interoffice Channel Facility Termination in same 3/1 Channel System per month			UNC1X	U1TF1	79.02	181.24	123.53	56.72	22.32						
		Additional Voice Grade COCI - in combination - per month			UNCVX	1D1VG	0.62	6.71	4.84								
		Nonrecurring Currently Combined Network Elements Switch -As-Is Charge			UNC1X	UNCCC		8.98	8.98	11.17	11.17						
	EXTENDED 4-WIRE 56 KBPS DIGITAL LOOP WITH DEDICATED DS1 INTEROFFICE TRANSPORT w/ 3/1 MUX																
		First 4-Wire 56Kbps Digital Grade Local Loop in Combination - Zone 1		1	UNCDX	UDL56	27.59	125.22	60.48	59.69	7.84						
		First 4-Wire 56Kbps Digital Grade Local Loop in Combination - Zone 2		2	UNCDX	UDL56	32.48	125.22	60.48	59.69	7.84						
		First 4-Wire 56Kbps Digital Grade Local Loop in Combination - Zone 3		3	UNCDX	UDL56	36.37	125.22	60.48	59.69	7.84						
		First Interoffice Transport - Dedicated - DS1 combination - Per Mile Per Month			UNC1X	1L5XX	0.19										
		First Interoffice Transport - Dedicated - DS1 - combination Facility Termination Per Month			UNC1X	U1TF1	79.02	181.24	123.53	56.72	22.32						
		Per each 1/0 Channel System in combination Per Month			UNC1X	MQ1	113.33	57.26	14.74	1.86	1.67						
		Per each OCU-DP COCI (data) COCI per month (2.4-64kbs)			UNCDX	1D1DD	1.32	6.71	4.84								
		3/1 Channel System in combination per month			UNC3X	MQ3	158.20	115.48	56.53	15.12	5.30						
		Per each DS1 COCI in combination per month			UNC1X	UC1D1	11.80	6.71	4.84								
		Additional 4-Wire 56Kbps Digital Grade Loop in same DS1 Interoffice Transport Combination - Zone 1		1	UNCDX	UDL56	27.59	125.22	60.48	59.69	7.84						
		Additional 4-Wire 56Kbps Digital Grade Loop in same DS1 Interoffice Transport Combination - Zone 2		2	UNCDX	UDL56	32.48	125.22	60.48	59.69	7.84						
		Additional 4-Wire 56Kbps Digital Grade Loop in same DS1 Interoffice Transport Combination - Zone 3		3	UNCDX	UDL56	36.37	125.22	60.48	59.69	7.84						
		OCU-DP COCI (data) COCI in combination per month (2.4-64kbs)			UNCDX	1D1DD	1.32	6.71	4.84								
		Each Additional DS1 Interoffice Channel per mile in same 3/1 Channel System per month			UNC1X	1L5XX	0.19										
		Each Additional DS1 Interoffice Channel Facility Termination in same 3/1 Channel System per month			UNC1X	U1TF1	79.02	181.24	123.53	56.72	22.32						

UNBUNDLED NETWORK ELEMENTS - Kentucky														Attachment: 2		Exhibit: A	
CATEGORY		RATE ELEMENTS	Interim	Zone	BCS	USOC	RATES ($)					Svc Order Submitted Elec per LSR	Svc Order Submitted Manually per LSR	Incremental Charge - Manual Svc Order vs. Electronic-1st	Incremental Charge - Manual Svc Order vs. Electronic-Add'l	Incremental Charge - Manual Svc Order vs. Electronic-Disc 1st	Incremental Charge - Manual Svc Order vs. Electronic-Disc Add'l
							Rec	Nonrecurring		Nonrecurring Disconnect		OSS Rates ($)					
								First	Add'l	First	Add'l	SOMEC	SOMAN	SOMAN	SOMAN	SOMAN	SOMAN
		Each Additional DS1 COCI in the same 3/1 channel system combination per month			UNC1X	UC1D1	11.80	6.71	4.84								
		Nonrecurring Currently Combined Network Elements Switch -As-Is Charge			UNC1X	UNCCC		8.98	8.98	11.17	11.17						
	EXTENDED 4-WIRE 64 KBPS DIGITAL LOOP WITH DEDICATED DS1 INTEROFFICE TRANSPORT w/ 3/1 MUX																
		First 4-Wire 64Kbps Digital Grade Loop in a DS1 Interoffice Transport Combination - Zone 1		1	UNCDX	UDL64	27.59	125.22	60.48	59.69	7.84						
		First 4-Wire 64Kbps Digital Grade Loop in a DS1 Interoffice Transport Combination - Zone 2		2	UNCDX	UDL64	32.48	125.22	60.48	59.69	7.84						
		First 4-Wire 64Kbps Digital Grade Loop in a DS1 Interoffice Transport Combination - Zone 3		3	UNCDX	UDL64	36.37	125.22	60.48	59.69	7.84						
		First Interoffice Transport - Dedicated - DS1 combination - Per Mile Per Month			UNC1X	1L5XX	0.19										
		First Interoffice Transport - Dedicated - DS1 combination - Facility Termination Per Month			UNC1X	U1TF1	79.02	181.24	123.53	56.72	22.32						
		Per each Channel System 1/0 in combination Per Month			UNC1X	MQ1	113.33	57.26	14.74	1.86	1.67						
		Per each OCU-DP COCI (data) in combination - per month (2.4-64kbs)			UNCDX	1D1DD	1.32	6.71	4.84								
		3/1 Channel System in combination per month			UNC3X	MQ3	158.20	115.48	56.53	15.12	5.30						
		Additional 4-Wire 64Kbps Digital Grade Loop in same DS1 Interoffice Transport Combination - Zone 1		1	UNCDX	UDL64	27.59	125.22	60.48	59.69	7.84						
		Additional 4-Wire 64Kbps Digital Grade Loop in same DS1 Interoffice Transport Combination - Zone 2		2	UNCDX	UDL64	32.48	125.22	60.48	59.69	7.84						
		Additional 4-Wire 64Kbps Digital Grade Loop in same DS1 Interoffice Transport Combination - Zone 3		3	UNCDX	UDL64	36.37	125.22	60.48	59.69	7.84						
		Additional OCU-DP COCI (data) - DS1 to DS0 Channel System combination - per month (2.4-64kbs)			UNCDX	1D1DD	1.32	6.71	4.84								
		Each Additional DS1 Interoffice Channel per mile in same 3/1 Channel System per month			UNC1X	1L5XX	0.19										
		Each Additional DS1 Interoffice Channel Facility Termination in same 3/1 Channel System per month			UNC1X	U1TF1	79.02	181.24	123.53	56.72	22.32						
		Each Additional DS1 COCI in the same 3/1 channel system combination per month			UNC1X	UC1D1	11.80	6.71	4.84								
		Nonrecurring Currently Combined Network Elements Switch -As-Is Charge			UNC1X	UNCCC		8.98	8.98	11.17	11.17						
	EXTENDED 2-WIRE ISDN LOOP WITH DS1 INTEROFFICE TRANSPORT w/ 3/1 MUX																
		First 2-Wire ISDN Loop in a DS1 Interoffice Combination Transport - Zone 1		1	UNCNX	U1L2X	18.44	125.22	60.48	59.69	7.84						
		First 2-Wire ISDN Loop in a DS1 Interoffice Combination Transport - Zone 2		2	UNCNX	U1L2X	25.08	125.22	60.48	59.69	7.84						
		First 2-Wire ISDN Loop in a DS1 Interoffice Combination Transport - Zone 3		3	UNCNX	U1L2X	42.87	125.22	60.48	59.69	7.84						
		First Interoffice Transport - Dedicated - DS1 combination - Per Mile per month			UNC1X	1L5XX	0.19										
		First Interoffice Transport - Dedicated - DS1 combination - Facility Termination per month			UNC1X	U1TF1	79.02	181.24	123.53	56.72	22.32						
		Per each Channel System 1/0 in combination - per month			UNC1X	MQ1	113.33	57.26	14.74	1.86	1.67						
		Per each 2-wire ISDN COCI (BRITE) in combination - per month			UNCNX	UC1CA	2.84	6.71	4.84								
		3/1 Channel System in combination per month			UNC3X	MQ3	158.20	115.48	56.53	15.12	5.30						
		Per each DS1 COCI in combination per month			UNC1X	UC1D1	11.80	6.71	4.84								
		Additional 2-wire ISDN Loop in same DS1Interoffice Transport Combination - Zone 1		1	UNCNX	U1L2X	18.44	125.22	60.48	59.69	7.84						
		Additional 2-wire ISDN Loop in same DS1Interoffice Transport Combination - Zone 2		2	UNCNX	U1L2X	25.08	125.22	60.48	59.69	7.84						
		Additional 2-wire ISDN Loop in same DS1Interoffice Transport Combination - Zone 3		3	UNCNX	U1L2X	42.87	125.22	60.48	59.69	7.84						
		Additional 2-wire ISDN COCI (BRITE) in same 1/0 channel system combination- per month			UNCNX	UC1CA	2.84	6.71	4.84								

UNBUNDLED NETWORK ELEMENTS - Kentucky														Attachment: 2		Exhibit: A	
CATEGORY		RATE ELEMENTS	Interim	Zone	BCS	USOC	RATES ($)					Svc Order Submitted Elec per LSR	Svc Order Submitted Manually per LSR	Incremental Charge - Manual Svc Order vs. Electronic-1st	Incremental Charge - Manual Svc Order vs. Electronic-Add'l	Incremental Charge - Manual Svc Order vs. Electronic-Disc 1st	Incremental Charge - Manual Svc Order vs. Electronic-Disc Add'l
							Rec	Nonrecurring		Nonrecurring Disconnect		OSS Rates ($)					
								First	Add'l	First	Add'l	SOMEC	SOMAN	SOMAN	SOMAN	SOMAN	SOMAN
		Each Additional DS1 Interoffice Channel per mile in same 3/1 Channel System per month			UNC1X	1L5XX	0.19										
		Each Additional DS1 Interoffice Channel Facility Termination in same 3/1 Channel System per month			UNC1X	U1TF1	79.02	181.24	123.53	56.72	22.32						
		Each Additional DS1 COCI in the same 3/1 channel system combination per month			UNC1X	UC1D1	11.80	6.71	4.84								
		Nonrecurring Currently Combined Network Elements Switch -As-Is Charge			UNC1X	UNCCC		8.98	8.98	11.17	11.17						
	EXTENDED 4-WIRE DS1 LOOP WITH DEDICATED DS1 INTEROFFICE TRANSPORT w/ 3/1 MUX																
		First 4-wire DS1 Digital Lcoal Loop in Combination - Zone 1		1	UNC1X	USLXX	86.47	210.70	114.60	63.96	17.97						
		First 4-wire DS1 Digital Lcoal Loop in Combination - Zone 2		2	UNC1X	USLXX	114.10	210.70	114.60	63.96	17.97						
		First 4-wire DS1 Digital Lcoal Loop in Combination - Zone 3		3	UNC1X	USLXX	297.76	210.70	114.60	63.96	17.97						
		First Interoffice Transport - Dedicated - DS1 combination - Per Mile Per Month			UNC1X	1L5XX	0.19										
		First Interoffice Transport - Dedicated - DS1 combination - Facility Termination Per Month			UNC1X	U1TF1	79.02	181.24	123.53	56.72	22.32						
		3/1 Channel System in combination per month			UNC3X	MQ3	158.20	115.48	56.53	15.12	5.30						
		Per each DS1 COCI combination per month			UNC1X	UC1D1	11.80	6.71	4.84								
		Each Additional DS1 Interoffice Channel per mile in same 3/1 Channel System per month			UNC1X	1L5XX	0.19										
		Each Additional DS1 Interoffice Channel Facility Termination in same 3/1 Channel System per month			UNC1X	U1TF1	79.02	181.24	123.53	56.72	22.32						
		Each Additional DS1 COCI in the same 3/1 channel system combination per month			UNC1X	UC1D1	11.80	6.71	4.84								
		Additional 4-Wire DS1 Digital Local Loop in Combination - Zone 1		1	UNC1X	USLXX	86.47	210.70	114.60	63.96	17.97						
		Additional 4-Wire DS1 Digital Local Loop in Combination - Zone 2		2	UNC1X	USLXX	114.10	210.70	114.60	63.96	17.97						
		Additional 4-Wire DS1 Digital Local Loop in Combination - Zone 3		3	UNC1X	USLXX	297.76	210.70	114.60	63.96	17.97						
		Nonrecurring Currently Combined Network Elements Switch -As-Is Charge			UNC1X	UNCCC		8.98	8.98	11.17	11.17						
	EXTENDED 4-WIRE 56 KBPS DIGITAL EXTENDED LOOP WITH DS0 INTEROFFICE TRANSPORT																
		First 4-wire 56 kbps Local Loop in combination - Zone 1		1	UNCDX	UDL56	27.59	125.22	60.48	59.69	7.84						
		First 4-wire 56 kbps Local Loop in combination - Zone 2		2	UNCDX	UDL56	32.48	125.22	60.48	59.69	7.84						
		First 4-wire 56 kbps Local Loop in combination - Zone 3		3	UNCDX	UDL56	36.37	125.22	60.48	59.69	7.84						
		First 4-wiree 56 kbps Interoffice Transport - Dedicated - Per Mile per month			UNCDX	1L5XX	0.01										
		First 4-wire 56 kbps Interoffice Transport - Dedicated - Facility Termination per month			UNCDX	U1TD5	17.25	98.09	53.67	56.31	22.42						
		Nonrecurring Currently Combined Network Elements Switch -As-Is Charge			UNCDX	UNCCC		8.98	8.98	11.17	11.17						
	EXTENDED 4-WIRE 64 KBPS DIGITAL EXTENDED LOOP WITH DS0 INTEROFFICE TRANSPORT																
		First 4-wire 64 kbps Local Loop in combination - Zone 1		1	UNCDX	UDL64	27.59	125.22	60.48	59.69	7.84						
		First 4-wire 64 kbps Local Loop in combination - Zone 2		2	UNCDX	UDL64	32.48	125.22	60.48	59.69	7.84						
		First 4-wire 64 kbps Local Loop in combination - Zone 3		3	UNCDX	UDL64	36.37	125.22	60.48	59.69	7.84						
		First I4-wire 65 kbps Interoffice Transport - Dedicated - Per Mile per month			UNCDX	1L5XX	0.01										
		First 4-wire 64 kbps Interoffice Transport - Dedicated - Facility Termination per month			UNCDX	U1TD6	17.25	98.09	53.67	56.31	22.42						
		Nonrecurring Currently Combined Network Elements Switch -As-Is Charge			UNCDX	UNCCC		8.98	8.98	11.17	11.17						
ADDITIONAL NETWORK ELEMENTS																	
	When used as a part of a currently combined facility, the non-recurrng charges do not apply, but a Switch As Is charge does apply.																
	When used as ordinarily combined network elements in All States, the non-recurring charges apply and the Switch As Is Charge does not.																
	Nonrecurring Currently Combined Network Elements "Switch As Is" Charge (One applies to each combination)																
		Nonrecurring Currently Combined Network Elements Switch -As-Is Charge - 2 wire/4-Wire VG			UNCVX	UNCCC		8.98	8.98	11.17	11.17						

UNBUNDLED NETWORK ELEMENTS - Kentucky														Attachment: 2		Exhibit: A	
CATEGORY		RATE ELEMENTS	Interim	Zone	BCS	USOC	RATES ($)					Svc Order Submitted Elec per LSR	Svc Order Submitted Manually per LSR	Incremental Charge - Manual Svc Order vs. Electronic-1st	Incremental Charge - Manual Svc Order vs. Electronic-Add'l	Incremental Charge - Manual Svc Order vs. Electronic-Disc 1st	Incremental Charge - Manual Svc Order vs. Electronic-Disc Add'l
							Rec	Nonrecurring		Nonrecurring Disconnect		OSS Rates ($)					
								First	Add'l	First	Add'l	SOMEC	SOMAN	SOMAN	SOMAN	SOMAN	SOMAN
		Nonrecurring Currently Combined Network Elements Switch -As-Is Charge - 56/64 kbps			UNCDX	UNCCC		8.98	8.98	11.17	11.17						
		Nonrecurring Currently Combined Network Elements Switch -As-Is Charge - DS1			UNC1X	UNCCC		8.98	8.98	11.17	11.17						
		Nonrecurring Currently Combined Network Elements Switch -As-Is Charge - DS3			UNC3X	UNCCC		8.98	8.98	11.17	11.17						
		Nonrecurring Currently Combined Network Elements Switch -As-Is Charge - STS1			UNCSX	UNCCC		8.98	8.98	11.17	11.17						
	Optional Features & Functions:																
		Clear Channel Capability Extended Frame Option - per DS1	I		U1TD1, ULDD1,UNC1X	CCOEF		0I	0I	0I	0I						
		Clear Channel Capability Super FrameOption - per DS1	I		U1TD1, ULDD1,UNC1X	CCOSF		0I	0I	0I	0I						
		Clear Channel Capability (SF/ESF) Option - Subsequent Activity - per DS1	I		ULDD1, U1TD1, UNC1X, USL	NRCCC		184.91S	23.82S	1.99S	0.78S						
		C-bit Parity Option - Subsequent Activity - per DS3	i		U1TD3, ULDD3, UE3, UNC3X	NRCC3		205.70S	7.20S	.6924S	0S						
	MULTIPLEXERS																
		DS1 to DS0 Channel System per month			UNC1X	MQ1	113.33	57.26	14.74	1.86	1.67						
		OCU-DP COCI (data) - DS1 to DS0 Channel System - per month (2.4-64kbs) used for a Local Loop			UDL	1D1DD	1.32	10.07	7.08								
		OCU-DP COCI (data) - DS1 to DS0 Channel System - per month (2.4-64kbs) used for connection to a channelized DS1 Local Channel in the same SWC as collocation			U1TUD	1D1DD	1.32	10.07	7.08								
		2-wire ISDN COCI (BRITE) - DS1 to DS0 Channel Systsem - per month for a Local Loop			UDN	UC1CA	2.84	10.07	7.08								
		2-wire ISDN COCI (BRITE) - DS1 to DS0 Channel Systsem - per month used for connection to a channelized DS1 Local Channel in the same SWC as collocation			U1TUB	UC1CA	2.84	10.07	7.08								
		Voice Grade COCI - DS1 to DS0 Channel System - per month used for a Local Loop			UEA	1D1VG	0.6228	10.07	7.08								
		Voice Grade COCI - DS1 to DS0 Channel System - per month used for connection to a channelized DS1 Local Channel in the same SWC as collocation			U1TUC	1D1VG	0.6228	10.07	7.08								
		DS3 to DS1 Channel System per month			UNC3X	MQ3	158.20	115.48	56.53	15.12	5.30						
		STS-1 to DS1 Channel System per month			UNCSX	MQ3	158.20	115.48	56.53	15.12	5.30						
		DS1 COCI used with Loop per month			USL	UC1D1	11.80	10.07	7.08								
		DS1 COCI (used for connection to a channelized DS1 Local Channel in the same SWC as collocation) per month			U1TUA	UC1D1	11.80	10.07	7.08								
		DS1 COCI used with Interoffice Channel per month			U1TD1	UC1D1	11.80	10.07	7.08								
		DS3 Interface Unit (DS1 COCI) used with Local Channel per month			ULDD1	UC1D1	11.80	10.07	7.08								
UNBUNDLED LOCAL EXCHANGE SWITCHING(PORTS)																	
	Exchange Ports																
	NOTE: Although the Port Rate includes all available features in GA, KY, LA & TN, the desired features will need to be ordered using retail USOCs																
	2-WIRE VOICE GRADE LINE PORT RATES (RES)																
		Exchange Ports - 2-Wire Analog Line Port- Res.			UEPSR	UEPRL	1.49	3.74	3.63	2.23	2.13						
		Exchange Ports - 2-Wire Analog Line Port with Caller ID - Res.			UEPSR	UEPRC	1.49	3.74	3.63	2.23	2.13						
		Exchange Ports - 2-Wire Analog Line Port outgoing only - Res.			UEPSR	UEPRO	1.49	3.74	3.63	2.23	2.13						
		Exchange Ports - 2-Wire VG unbundled KY extended local dialing parity Port with Caller ID - Res.			UEPSR	UEPRM	1.49	3.74	3.63	2.23	2.13						
		Exchange Ports - 2-Wire VG unbundled res, low usage line port with Caller ID (LUM)			UEPSR	UEPAP	1.49	3.74	3.63	2.23	2.13						
		Exchange Ports - 2-Wire Voice Kentucky Residence Dialing Plan without Caller ID			UEPSR	UEPWE	1.49	3.74	3.63	2.23	2.13						
		2-Wire voice unbundled Low Usage Line Port without Caller ID Capability			UEPSR	UEPRT	1.49	3.74	3.63	2.23	2.13						

UNBUNDLED NETWORK ELEMENTS - Kentucky														Attachment: 2		Exhibit: A	
CATEGORY	RATE ELEMENTS	Interim	Zone	BCS	USOC	RATES ($)					Svc Order Submitted Elec per LSR	Svc Order Submitted Manually per LSR	Incremental Charge - Manual Svc Order vs. Electronic-1st	Incremental Charge - Manual Svc Order vs. Electronic-Add'l	Incremental Charge - Manual Svc Order vs. Electronic-Disc 1st	Incremental Charge - Manual Svc Order vs. Electronic-Disc Add'l
						Rec	Nonrecurring		Nonrecurring Disconnect		OSS Rates ($)					
							First	Add'l	First	Add'l	SOMEC	SOMAN	SOMAN	SOMAN	SOMAN	SOMAN
	Subsequent Activity			UEPSR	USASC	0.00	0.00	0.00								
FEATURES																
	All Available Vertical Features			UEPSR	UEPVF	0.00	0.00	0.00								
2-WIRE VOICE GRADE LINE PORT RATES (BUS)																
	Exchange Ports - 2-Wire Analog Line Port without Caller ID - Bus			UEPSB	UEPBL	1.49	3.74	3.63	2.23	2.13						
	Exchange Ports - 2-Wire VG unbundled Line Port with unbundled port with Caller+E484 ID - Bus.			UEPSB	UEPBC	1.49	3.74	3.63	2.23	2.13						
	Exchange Ports - 2-Wire Analog Line Port outgoing only - Bus.			UEPSB	UEPBO	1.49	3.74	3.63	2.23	2.13						
	Exchange Ports - 2-Wire VG unbundled KY extended local dialing parity Port with Caller ID - Bus.			UEPSB	UEPBM	1.49	3.74	3.63	2.23	2.13						
	Exhange Ports - 2-Wire VG unbundled incoming only port with Caller ID - Bus			UEPSB	UEPB1	1.49	3.74	3.63	2.23	2.13						
	Exchange Ports - 2-Wire Voice Kentucky Business Dialing Plan without Caller ID			UEPSB	UEPWF	1.49	3.74	3.63	2.23	2.13						
	2-Wire voice unbundled Incoming Only Port without Caller ID Capability			UEPSB	UEPBE	1.49	3.74	3.63	2.23	2.13						
	Subsequent Activity			UEPSB	USASC	0.00	0.00	0.00								
FEATURES																
	All Available Vertical Features			UEPSB	UEPVF	0.00	0.00	0.00								
EXCHANGE PORT RATES (DID & PBX)																
	2-Wire VG Unbundled 2-Way PBX Trunk - Res			UEPSE	UEPRD	1.49	39.05	18.17	15.38	0.89						
	2-Wire VG Line Side Unbundled 2-Way PBX Trunk - Bus			UEPSP	UEPPC	1.49	39.05	18.17	15.38	0.89						
	2-Wire VG Line Side Unbundled Outward PBX Trunk - Bus			UEPSP	UEPPO	1.49	39.05	18.17	15.38	0.89						
	2-Wire VG Line Side Unbundled Incoming PBX Trunk - Bus			UEPSP	UEPP1	1.49	39.05	18.17	15.38	0.89						
	2-Wire Analog Long Distance Terminal PBX Trunk - Bus			UEPSP	UEPLD	1.49	39.05	18.17	15.38	0.89						
	2-Wire Voice Unbundled PBX LD Terminal Ports			UEPSP	UEPLD	1.49	39.05	18.17	15.38	0.89						
	2-Wire Vice Unbundled 2-Way PBX Usage Port			UEPSP	UEPXA	1.49	39.05	18.17	15.38	0.89						
	2-Wire Voice Unbundled PBX Toll Terminal Hotel Ports			UEPSP	UEPXB	1.49	39.05	18.17	15.38	0.89						
	2-Wire Voice Unbundled PBX LD DDD Terminals Port			UEPSP	UEPXC	1.49	39.05	18.17	15.38	0.89						
	2-Wire Voice Unbundled PBX LD Terminal Switchboard Port			UEPSP	UEPXD	1.49	39.05	18.17	15.38	0.89						
	2-Wire Voice Unbundled PBX LD Terminal Switchboard IDD Capable Port			UEPSP	UEPXE	1.49	39.05	18.17	15.38	0.89						
	2-Wire Voice Unbundled 2-Way PBX Kentucky Room Area Calling Port Without LUD			UEPSP	UEPXF	1.49	39.05	18.17	15.38	0.89						
	2-Wire Voice Unbundled PBX Kentucky LUD Area Calling Port			UEPSP	UEPXG	1.49	39.05	18.17	15.38	0.89						
	2-Wire Voice Unbundled PBX Kentucky Premium Callling Port			UEPSP	UEPXH	1.49	39.05	18.17	15.38	0.89						
	2-Wire Voice Unbundled 2-Way PBX Kentucky Area Callling Port Without LUD			UEPSP	UEPXJ	1.49	39.05	18.17	15.38	0.89						
	2-Wire Voice Unbundled 2-Way PBX Hotel/Hospital Economy Administrative Calling Port			UEPSP	UEPXL	1.49	39.05	18.17	15.38	0.89						
	2-Wire Voice Unbundled 2-Way PBX Hotel/Hospital Economy Room Calling Port			UEPSP	UEPXM	1.49	39.05	18.17	15.38	0.89						
	2-Wire Voice Unbundled 1-Way Outgoing PBX Hotel/Hospital Discount Room Calling Port			UEPSP	UEPXO	1.49	39.05	18.17	15.38	0.89						
	2-Wire Voice Unbundled 1-Way Outgoing PBX Measured Port			UEPSP	UEPXS	1.49	39.05	18.17	15.38	0.89						
	Subsequent Activity			UEPSP	USASC	0.00	0.00	0.00								
FEATURES																
	All Available Vertical Features			UEPSP UEPSE	UEPVF	0.00	0.00	0.00								
EXCHANGE PORT RATES (COIN)																
	Exchange Ports - Coin Port					1.49	3.74	3.63	2.23	2.13						
Local Switching Features offered with Port																
NOTE: Transmission/usage charges associated with POTS circuit switched usage will also apply to circuit switched voice and/or circuit switched data transmission by B-Channels associated with 2-wire ISDN ports.																
NOTE: Access to B Channel or D Channel Packet capabilities will be available only through BFR/New Business Request Process. Rates for the packet capabilities will be determined via the Bona Fide Request/New Business Request Process.																
	Exchange port - 4-wire ISDN trunk port -all available features included				UEPEX	101.60	188.36	95.15	61.92	22.67						
UNBUNDLED LOCAL EXCHANGE SWITCHING(PORTS)																
EXCHANGE PORT RATES																

UNBUNDLED NETWORK ELEMENTS - Kentucky														Attachment: 2		Exhibit: A	
CATEGORY	RATE ELEMENTS	Interim	Zone	BCS	USOC	RATES ($)					Svc Order Submitted Elec per LSR	Svc Order Submitted Manually per LSR	Incremental Charge - Manual Svc Order vs. Electronic-1st	Incremental Charge - Manual Svc Order vs. Electronic-Add'l	Incremental Charge - Manual Svc Order vs. Electronic-Disc 1st	Incremental Charge - Manual Svc Order vs. Electronic-Disc Add'l
						Rec	Nonrecurring		Nonrecurring Disconnect		OSS Rates ($)					
							First	Add'l	First	Add'l	SOMEC	SOMAN	SOMAN	SOMAN	SOMAN	SOMAN
	The DS1 Port rates below for 4-Wire DDITS Trunk Port and 4-Wire ISDN Port in this rate exhibit apply to the embedded base in place as of 10/2/03 until 4/1/04. After 4/1/04 these rates shall revert to tariff rates or a separate agreement.															
	Requests for 4-Wire DDITS Trunk Ports with 4-Wire ISDN DS1 Ports after the effective date of this amendment shall be provided pursuant to a separate agreement or tariff at BellSouth's discretion.															
	Exchange Ports - 2-Wire DID Port			UEPEX	UEPP2	10.51	92.18	15.82	52.16	5.30						
	Exchange Ports - DDITS Port - 4-Wire DS1 Port with DID capability (E:4/1/2004)			UEPDD	UEPDD	74.77	164.86	77.74	60.69	3.86						
	Exchange Ports - 2-Wire ISDN Port (See Notes below.)			UEPTX, UEPSX	U1PMA	13.46	60.60	50.67	32.83	14.17						
	All Features Offered			UEPTX, UEPSX	UEPVF	0.00	0.00	0.00								
	Exchange Ports - 2-Wire ISDN Port -- Channel Profiles			UEPTX, UEPSX	U1UMA	0.00	0.00	0.00								
	NOTE: Transmission/usage charges associated with POTS circuit switched usage will also apply to circuit switched voice and/or circuit switched data transmission by B-Channels associated with 2-wire ISDN ports.															
	NOTE: Access to B Channel or D Channel Packet capabilities will be available only through BFR/New Business Request Process. Rates for the packet capabilities will be determined via the Bona Fide Request/New Business Request Process.															
	EXCHANGE PORT RATES (continued)															
	Exchange Ports - 4-Wire ISDN DS1 Port with Detailed E911 Locator Capability (E:4/1/2004)			UEPEX	UEPEX	101.60	188.36	95.15	61.92	22.67						
	Exchange Ports - 4-Wire ISDN DS1 Port (E:4/1/2004)			UEPDX	UEPDX	101.60	188.36	95.15	61.92	22.67						
	Physical Collocation - DS1 Cross-Connects			UEPEX UEPDX	PE1P1	1.48	44.23	31.98	12.81	11.57						
	Virtual collocation - Special Access & UNE, cross-connect per DS1			UEPEX UEPDX	CNC1X	1.48	44.23	31.98	12.81	11.57						
	Detailed E911 with Locator Capability (required with UEPEX port)															
	Unbundled Exchange Ports, 4-Wire ISDN DS1 Port - E911 Locator Capability - Initial Profile Establishment per CLEC per State			UEPEX	UEP1A	0.00	1,811.00		156.69							
	Unbundled Exchange Ports, 4-Wire ISDN DS1 Port - E911 Locator Capability - Subsequent Profile Changes, Additions, Deletions			UEPEX	UEP1B	0.00	175.82									
	New or Additional PRI Telephone Numbers															
	Unbundled Exchange Ports, 4-Wire ISDN DS1 Port - E911 Locator Capability 2-way Telephone Numbers, per number in E911 profile [New or Additional]			UEPEX	UEP1C	0.07	0.54									
	Unbundled Exchange Ports, 4-Wire ISDN DS1 Port - E911 Locator Capability - Outdial Telephone Numbers, per number in E911 profile [New or Additional]			UEPEX	UEP1D	0.07	12.71	12.71								
	Unbundled Exchange Ports, 4-Wire ISDN DS1 Port - Inward Telephone Numbers - Inward Data Only Option [New or Additional]			UEPDX	UEP1E	0.00	0.54									
	Exchange Ports - 4-Wire ISDN DS1 Port - Subsequent [New] Inward Tel Numbers [Customer Testing Purposes]			UEPEX	PR7ZT	0.00	25.41	25.41								
	LOCAL NUMBER PORTABILITY															
	Local Number Portability (1 per port)			UEPEX UEPDX	LNPCN	1.75										
	INTERFACE (Provsioning Only)															
	Voice/Data			UEPEX	PR71V	0.00	0.00	0.00								
	Digital Data			UEPEX	PR71D	0.00	0.00	0.00								
	Inward Data			UEPDX	PR71E	0.00	0.00	0.00								
	New or Additional Channel															
	New or Additional - Voice/Data "B" Channel			UEPEX	PR7BV	0.00	15.48									
	New or Additional - Digital Data "B" Channel			UEPEX	PR7BF	0.00	15.48									
	New or Additional Inward Data "B" Channel			UEPDX	PR7BD	0.00	15.48									
	New or Additional Useage Sensitive Voice Data "B" Channel			UEPEX	PR7BS	0.00	15.48									
	New or Additional Useage Sensitive Digital Data "B" Channel			UEPEX	PR7BU	0.00	15.48									
	New or Additional PRI "D" Channel			UEPEX	PR7EX	0.00	15.48									
	CALL TYPES															
	Inward			UEPEX UEPDX	PR7C1	0.00	0.00	0.00								
	Outward			UEPEX	PR7CO	0.00	0.00	0.00								
	Two-way			UEPEX	PR7CC	0.00	0.00	0.00								
	UNBUNDLED PORT with REMOTE CALL FORWARDING CAPABILITY															
	UNBUNDLED REMOTE CALL FORWARDING SERVICE - RESIDENCE															
	Unbundled Remote Call Forwarding Service, Area Calling, Res			UEPVR	UERAC	1.49	3.74	3.63								
	Unbundled Remote Call Forwarding Service, Local Calling - Res			UEPVR	UERLC	1.49	3.74	3.63								
	Unbundled Remote Call Forwarding Service, InterLATA - Res			UEPVR	UERTE	1.49	3.74	3.63								

UNBUNDLED NETWORK ELEMENTS - Kentucky														Attachment: 2		Exhibit: A	
CATEGORY		RATE ELEMENTS	Interim	Zone	BCS	USOC	RATES ($)					Svc Order Submitted Elec per LSR	Svc Order Submitted Manually per LSR	Incremental Charge - Manual Svc Order vs. Electronic-1st	Incremental Charge - Manual Svc Order vs. Electronic-Add'l	Incremental Charge - Manual Svc Order vs. Electronic-Disc 1st	Incremental Charge - Manual Svc Order vs. Electronic-Disc Add'l
							Rec	Nonrecurring		Nonrecurring Disconnect		OSS Rates ($)					
								First	Add'l	First	Add'l	SOMEC	SOMAN	SOMAN	SOMAN	SOMAN	SOMAN
		Unbundled Remote Call Forwarding Service, IntraLATA - Res			UEPVR	UERTR	1.49	3.74	3.63								
	Non-Recurring																
		Unbundled Remote Call Forwarding Service - Conversion - Switch-as-is			UEPVR	USAC2		0.10	0.10								
		Unbundled Remote Call Forwarding Service - Conversion with allowed change (PIC and LPIC)			UEPVR	USACC		0.10	0.10								
	UNBUNDLED REMOTE CALL FORWARDING - Bus																
		Unbundled Remote Call Forwarding Service, Area Calling - Bus			UEPVB	UERAC	1.49	3.74	3.63								
		Unbundled Remote Call Forwarding Service, Local Calling - Bus			UEPVB	UERLC	1.49	3.74	3.63								
		Unbundled Remote Call Forwarding Service, InterLATA - Bus			UEPVB	UERTE	1.49	3.74	3.63								
		Unbundled Remote Call Forwarding Service, IntraLATA - Bus			UEPVB	UERTR	1.49	3.74	3.63								
		Unbundled Remote Call Forwarding Service Expanded and Exception Local Calling			UEPVB	UERVJ	1.49	3.74	3.63								
	Non-Recurring																
		Unbundled Remote Call Forwarding Service - Conversion - Switch-as-is			UEPVB	USAC2		0.10	0.10								
		Unbundled Remote Call Forwarding Service - Conversion with allowed change (PIC and LPIC)			UEPVB	USACC		0.10	0.10								
UNBUNDLED LOCAL SWITCHING, PORT USAGE																	
	End Office Switching (Port Usage)																
		End Office Switching Function, Per MOU					0.0011971										
		End Office Trunk Port - Shared, Per MOU					0.0002112										
	Tandem Switching (Port Usage) (Local or Access Tandem)																
		Tandem Switching Function Per MOU					0.000194										
		Tandem Trunk Port - Shared, Per MOU					0.0002416										
		Tandem Switching Function Per MOU (Melded)					0.000094381										
		Tandem Trunk Port - Shared, Per MOU (Melded)					0.000117538										
		Melded Factor: 48.65% of the Tandem Rate															
	Common Transport																
		Common Transport - Per Mile, Per MOU					0.000003										
		Common Transport - Facilities Termination Per MOU					0.0007466										
UNBUNDLED PORT/LOOP COMBINATIONS - COST BASED RATES																	
	Cost Based Rates are applied where BellSouth is required by FCC and/or State Commission rule to provide Unbundled Local Switching or Switch Ports.																
	Features shall apply to the Unbundled Port/Loop Combination - Cost Based Rate section in the same manner as they are applied to the Stand-Alone Unbundled Port section of this Rate Exhibit.																
	End Office and Tandem Switching Usage and Common Transport Usage rates in the Port section of this rate exhibit shall apply to all combinations of loop/port network elements except for UNE Coin Port/Loop Combinations.																
	The first and additional Port nonrecurring charges apply to Not Currently Combined Combos. For Currently Combined Combos the nonrecurring charges shall be those identified in the Nonrecurring - Currently Combined sections.																
	2-WIRE VOICE GRADE LOOP WITH 2-WIRE LINE PORT (RES)																
	UNE Port/Loop Combination Rates																
		2-Wire VG Loop/Port Combo - Zone 1		1			10.79										
		2-Wire VG Loop/Port Combo - Zone 2		2			15.52										
		2-Wire VG Loop/Port Combo - Zone 3		3			31.74										
	UNE Loop Rates																
		2-Wire Voice Grade Loop (SL1) - Zone 1		1	UEPRX	UEPLX	9.64										
		2-Wire Voice Grade Loop (SL1) - Zone 2		2	UEPRX	UEPLX	14.37										
		2-Wire Voice Grade Loop (SL1) - Zone 3		3	UEPRX	UEPLX	30.59										
	2-Wire Voice Grade Line Port Rates (Res)																
		2-Wire voice unbundled port - residence			UEPRX	UEPRL	1.15	21.29	15.49	2.85	2.67						
		2-Wire voice unbundled port with Caller ID - res			UEPRX	UEPRC	1.15	21.29	15.49	2.85	2.67						
		2-Wire voice unbundled port outgoing only - res			UEPRX	UEPRO	1.15	21.29	15.49	2.85	2.67						
		2-Wire voice Grade unbundled Kentucky extended local dialing parity port with Caller ID - res			UEPRX	UEPRM	1.15	21.29	15.49	2.85	2.67						
		2-Wire voice unbundles res, low usage line port with Caller ID (LUM)			UEPRX	UEPAP	1.15	21.29	15.49	2.85	2.67						
		2-Wire Voice Unbundled Kentucky Residence Dialing Plan without Caller ID			UEPRX	UEPWE	1.15	21.29	15.49	2.85	2.67						
		2-Wire voice unbundled Low Usage Line Port without Caller ID Capability			UEPRX	UEPRT	1.15	21.29	15.49	2.85	2.67						

UNBUNDLED NETWORK ELEMENTS - Kentucky														Attachment: 2		Exhibit: A	
CATEGORY	RATE ELEMENTS	Interim	Zone	BCS	USOC	RATES ($)					Svc Order Submitted Elec per LSR	Svc Order Submitted Manually per LSR	Incremental Charge - Manual Svc Order vs. Electronic-1st	Incremental Charge - Manual Svc Order vs. Electronic-Add'l	Incremental Charge - Manual Svc Order vs. Electronic-Disc 1st	Incremental Charge - Manual Svc Order vs. Electronic-Disc Add'l
						Rec	Nonrecurring		Nonrecurring Disconnect		OSS Rates ($)					
							First	Add'l	First	Add'l	SOMEC	SOMAN	SOMAN	SOMAN	SOMAN	SOMAN
FEATURES																
	All Features Offered			UEPRX	UEPVF	0.00	0.00	0.00								
LOCAL NUMBER PORTABILITY																
	Local Number Portability (1 per port)			UEPRX	LNPCX	0.35										
NONRECURRING CHARGES (NRCs) - CURRENTLY COMBINED																
	2-Wire Voice Grade Loop / Line Port Combination - Conversion - Switch-as-is			UEPRX	USAC2		0.10	0.10								
	2-Wire Voice Grade Loop / Line Port Combination - Conversion - Switch with change			UEPRX	USACC		0.10	0.10								
ADDITIONAL NRCs																
	2-Wire Voice Grade Loop/Line Port Combination - Subsequent Activity			UEPRX	USAS2	0.00	0.00	0.00								
	Unbundled Miscellaneous Rate Element, Tag Loop at End User Premise			UEPRX	URETL		8.33	0.83								
OFF/ON PREMISES EXTENSION CHANNELS																
	2 Wire Analog Voice Grade Extension Loop – Non-Design		1	UEPRX	UEAEN	10.56	46.66	22.57	26.65	7.65						
	2 Wire Analog Voice Grade Extension Loop – Non-Design		2	UEPRX	UEAEN	15.34	46.66	22.57	26.65	7.65						
	2 Wire Analog Voice Grade Extension Loop – Non-Design		3	UEPRX	UEAEN	31.11	46.66	22.57	26.65	7.65						
	2 Wire Analog Voice Grade Extension Loop – Design		1	UEPRX	UEAED	12.67	134.89	81.87	73.65	14.88						
	2 Wire Analog Voice Grade Extension Loop – Design		2	UEPRX	UEAED	17.45	134.89	81.87	73.65	14.88						
	2 Wire Analog Voice Grade Extension Loop – Design		3	UEPRX	UEAED	33.22	134.89	81.87	73.65	14.88						
INTEROFFICE TRANSPORT																
	Interoffice Transport - Dedicated - 2 Wire Voice Grade - Facility Termination			UEPRX	U1TV2	23.95	98.09	53.67	56.31	22.42						
	Interoffice Transport - Dedicated - 2 Wire Voice Grade - Per Mile or Fraction Mile			UEPRX	U1TVM	0.0095	0.00	0.00								
2-WIRE VOICE GRADE LOOP WITH 2-WIRE LINE PORT (BUS)																
UNE Port/Loop Combination Rates																
	2-Wire VG Loop/Port Combo - Zone 1		1			10.79										
	2-Wire VG Loop/Port Combo - Zone 2		2			15.52										
	2-Wire VG Loop/Port Combo - Zone 3		3			31.74										
UNE Loop Rates																
	2-Wire Voice Grade Loop (SL1) - Zone 1		1	UEPBX	UEPLX	9.64										
	2-Wire Voice Grade Loop (SL1) - Zone 2		2	UEPBX	UEPLX	14.37										
	2-Wire Voice Grade Loop (SL1) - Zone 3		3	UEPBX	UEPLX	30.59										
2-Wire Voice Grade Line Port (Bus)																
	2-Wire voice unbundled port without Caller ID - bus			UEPBX	UEPBL	1.15	21.29	15.49	2.85	2.67						
	2-Wire voice unbundled port with Caller + E484 ID - bus			UEPBX	UEPBC	1.15	21.29	15.49	2.85	2.67						
	2-Wire voice unbundled port outgoing only - bus			UEPBX	UEPBO	1.15	21.29	15.49	2.85	2.67						
	2-Wire voice Grade unbundled Kentucky extended local dialing parity port with Caller ID - bus			UEPBX	UEPBM	1.15	21.29	15.49	2.85	2.67						
	2-Wire voice unbundled incoming only port with Caller ID - Bus			UEPBX	UEPB1	1.15	21.29	15.49	2.85	2.67						
	2-Wire Voice Unbundled Kentucky Business Dialing Plan without Caller ID			UEPBX	UEPWF	1.15	21.29	15.49	2.85	2.67						
	2-Wire voice unbundled Incoming Only Port without Caller ID Capability			UEPBX	UEPBE	1.15	21.29	15.49	2.85	2.67						
LOCAL NUMBER PORTABILITY																
	Local Number Portability (1 per port)			UEPBX	LNPCX	0.35										
FEATURES																
	All Features Offered			UEPBX	UEPVF	0.00	0.00	0.00								
NONRECURRING CHARGES (NRCs) - CURRENTLY COMBINED																
	2-Wire Voice Grade Loop / Line Port Combination - Conversion - Switch-as-is			UEPBX	USAC2		0.10	0.10								
	2-Wire Voice Grade Loop / Line Port Combination - Conversion - Switch with change			UEPBX	USACC		0.10	0.10								
ADDITIONAL NRCs																
	2-Wire Voice Grade Loop/Line Port Combination - Subsequent Activity			UEPBX	USAS2		0.00	0.00								

UNBUNDLED NETWORK ELEMENTS - Kentucky													Attachment: 2		Exhibit: A	
CATEGORY	RATE ELEMENTS	Interim	Zone	BCS	USOC	RATES ($)					Svc Order Submitted Elec per LSR	Svc Order Submitted Manually per LSR	Incremental Charge - Manual Svc Order vs. Electronic-1st	Incremental Charge - Manual Svc Order vs. Electronic-Add'l	Incremental Charge - Manual Svc Order vs. Electronic-Disc 1st	Incremental Charge - Manual Svc Order vs. Electronic-Disc Add'l
						Rec	Nonrecurring		Nonrecurring Disconnect		OSS Rates ($)					
							First	Add'l	First	Add'l	SOMEC	SOMAN	SOMAN	SOMAN	SOMAN	SOMAN
	Unbundled Miscellaneous Rate Element, Tag Loop at End User Premise			UEPBX	URETL		8.33	0.83								
OFF/ON PREMISES EXTENSION CHANNELS																
	2 Wire Analog Voice Grade Extension Loop – Non-Design		1	UEPBX	UEAEN	10.56	46.66	22.57	26.65	7.65						
	2 Wire Analog Voice Grade Extension Loop – Non-Design		2	UEPBX	UEAEN	15.34	46.66	22.57	26.65	7.65						
	2 Wire Analog Voice Grade Extension Loop – Non-Design		3	UEPBX	UEAEN	31.11	46.66	22.57	26.65	7.65						
	2 Wire Analog Voice Grade Extension Loop – Design		1	UEPBX	UEAED	12.67	134.89	81.87	73.65	14.88						
	2 Wire Analog Voice Grade Extension Loop – Design		2	UEPBX	UEAED	17.45	134.89	81.87	73.65	14.88						
	2 Wire Analog Voice Grade Extension Loop – Design		3	UEPBX	UEAED	33.22	134.89	81.87	73.65	14.88						
INTEROFFICE TRANSPORT																
	Interoffice Transport - Dedicated - 2 Wire Voice Grade - Facility Termination			UEPBX	U1TV2	23.95	98.09	53.67	56.31	22.42						
	Interoffice Transport - Dedicated - 2 Wire Voice Grade - Per Mile or Fraction Mile			UEPBX	U1TVM	0.0095	0.00	0.00								
2-WIRE VOICE GRADE LOOP WITH 2-WIRE LINE PORT (RES - PBX)																
UNE Port/Loop Combination Rates																
	2-Wire VG Loop/Port Combo - Zone 1		1			10.79										
	2-Wire VG Loop/Port Combo - Zone 2		2			15.52										
	2-Wire VG Loop/Port Combo - Zone 3		3			31.74										
UNE Loop Rates																
	2-Wire Voice Grade Loop (SL 1) - Zone 1		1	UEPRG	UEPLX	9.64										
	2-Wire Voice Grade Loop (SL 1) - Zone 2		2	UEPRG	UEPLX	14.37										
	2-Wire Voice Grade Loop (SL 1) - Zone 3		3	UEPRG	UEPLX	30.59										
2-Wire Voice Grade Line Port Rates (RES - PBX)																
	2-Wire VG Unbundled Combination 2-Way PBX Trunk Port - Res			UEPRG	UEPRD	1.15	21.29	15.49	2.85	2.67						
LOCAL NUMBER PORTABILITY																
	Local Number Portability (1 per port)			UEPRG	LNPCP	3.15	0.00	0.00								
FEATURES																
	All Features Offered			UEPRG	UEPVF	0.00	0.00	0.00								
NONRECURRING CHARGES (NRCs) - CURRENTLY COMBINED																
	2-Wire Voice Grade Loop/ Line Port Combination (PBX) - Conversion - Switch-As-Is			UEPRG	USAC2		8.45	1.91								
	2-Wire Voice Grade Loop/ Line Port Combination (PBX) - Conversion - Switch with Change			UEPRG	USACC		8.45	1.91								
ADDITIONAL NRCs																
	2-Wire Voice Grade Loop/ Line Port Combination (PBX) - Subsequent Activity			UEPRG	USAS2	0.00	0.00	0.00								
	PBX Subsequent Activity - Change/Rearrange Multiline Hunt Group						7.86	7.86								
	Unbundled Miscellaneous Rate Element, Tag Loop at End User Premise			UEPRG	URETL		8.33	0.83								
OFF/ON PREMISES EXTENSION CHANNELS																
	Local Channel Voice grade, per termination		1	UEPRG	P2JHX	12.67	134.89	81.87	73.65	14.88						
	Local Channel Voice grade, per termination		2	UEPRG	P2JHX	17.45	134.89	81.87	73.65	14.88						
	Local Channel Voice grade, per termination		3	UEPRG	P2JHX	33.22	134.89	81.87	73.65	14.88						
	Non-Wire Direct Serve Channel Voice Grade		1	UEPRG	SDD2X	12.68	170.06	78.10	119.62	15.80						
	Non-Wire Direct Serve Channel Voice Grade		2	UEPRG	SDD2X	18.12	170.06	78.10	119.62	15.80						
	Non-Wire Direct Serve Channel Voice Grade		3	UEPRG	SDD2X	29.64	170.06	78.10	119.62	15.00						
INTEROFFICE TRANSPORT																
	Interoffice Transport - Dedicated - 2 Wire Voice Grade - Facility Termination			UEPRG	U1TV2	23.95	98.09	53.67	56.31	22.42						
	Interoffice Transport - Dedicated - 2 Wire Voice Grade - Per Mile or Fraction Mile			UEPRG	U1TVM	0.0095	0.00	0.00								
2-WIRE VOICE GRADE LOOP WITH 2-WIRE LINE PORT (BUS - PBX)																
UNE Port/Loop Combination Rates																
	2-Wire VG Loop/Port Combo - Zone 1		1			10.79										
	2-Wire VG Loop/Port Combo - Zone 2		2			15.52										
	2-Wire VG Loop/Port Combo - Zone 3		3			31.74										

UNBUNDLED NETWORK ELEMENTS - Kentucky														Attachment: 2		Exhibit: A	
CATEGORY		RATE ELEMENTS	Interim	Zone	BCS	USOC	RATES ($)					Svc Order Submitted Elec per LSR	Svc Order Submitted Manually per LSR	Incremental Charge - Manual Svc Order vs. Electronic-1st	Incremental Charge - Manual Svc Order vs. Electronic-Add'l	Incremental Charge - Manual Svc Order vs. Electronic-Disc 1st	Incremental Charge - Manual Svc Order vs. Electronic-Disc Add'l
							Rec	Nonrecurring		Nonrecurring Disconnect		OSS Rates ($)					
								First	Add'l	First	Add'l	SOMEC	SOMAN	SOMAN	SOMAN	SOMAN	SOMAN
	UNE Loop Rates																
		2-Wire Voice Grade Loop (SL 1) - Zone 1		1	UEPPX	UEPLX	9.64										
		2-Wire Voice Grade Loop (SL 1) - Zone 2		2	UEPPX	UEPLX	14.37										
		2-Wire Voice Grade Loop (SL 1) - Zone 3		3	UEPPX	UEPLX	30.59										
	2-Wire Voice Grade Line Port Rates (BUS - PBX)																
		Line Side Unbundled Combination 2-Way PBX Trunk Port - Bus			UEPPX	UEPPC	1.15	21.29	15.49	2.85	2.67						
		Line Side Unbundled Outward PBX Trunk Port - Bus			UEPPX	UEPPO	1.15	21.29	15.49	2.85	2.67						
		Line Side Unbundled Incoming PBX Trunk Port - Bus			UEPPX	UEPP1	1.15	21.29	15.49	2.85	2.67						
		2-Wire Voice Unbundled OutDial Alabama NAR Area Calling Port			UEPPX	UEPOA											
		2-Wire Voice Unbundled PBX LD Terminal Ports			UEPPX	UEPLD	1.15	21.29	15.49	2.85	2.67						
		2-Wire Voice Unbundled 2-Way Combination PBX Usage Port			UEPPX	UEPXA	1.15	21.29	15.49	2.85	2.67						
		2-Wire Voice Unbundled PBX Toll Terminal Hotel Ports			UEPPX	UEPXB	1.15	21.29	15.49	2.85	2.67						
		2-Wire Voice Unbundled PBX LD DDD Terminals Port			UEPPX	UEPXC	1.15	21.29	15.49	2.85	2.67						
		2-Wire Voice Unbundled PBX LD Terminal Switchboard Port			UEPPX	UEPXD	1.15	21.29	15.49	2.85	2.67						
		2-Wire Voice Unbundled PBX LD Terminal Switchboard IDD Capable Port			UEPPX	UEPXE	1.15	21.29	15.49	2.85	2.67						
		2-Wire Voice Unbundled 2-Way PBX Kentucky Room Area Calling Port without LUD			UEPPX	UEPXF	1.15	21.29	15.49	2.85	2.67						
		2-Wire Voice Unbundled PBX Kentucky LUD Area Calling Port			UEPPX	UEPXG	1.15	21.29	15.49	2.85	2.67						
		2-Wire Voice Unbundled PBX Kentucky Premium Calling Port			UEPPX	UEPXH	1.15	21.29	15.49	2.85	2.67						
		2-Wire Voice Unbundled 2-Way Kentucky Area Calling Port without LUD			UEPPX	UEPXJ	1.15	21.29	15.49	2.85	2.67						
		2-Wire Voice Unbundled OutDial Kentucky NAR Area Calling Port			UEPPX	UEPOK	1.15	21.29	15.49	2.85	2.67						
		2-Wire Voice Unbundled 2-Way PBX Hotel/Hospital Economy Administrative Calling Port			UEPPX	UEPXL	1.15	21.29	15.49	2.85	2.67						
		2-Wire Voice Unbundled 2-Way PBX Hotel/Hospital Economy Room Calling Port			UEPPX	UEPXM	1.15	21.29	15.49	2.85	2.67						
		2-Wire Voice Unbundled 1-Way Outgoing PBX Hotel/Hospital Discount Room Calling Port			UEPPX	UEPXO	1.15	21.29	15.49	2.85	2.67						
		2-Wire Voice Unbundled 1-Way Outgoing PBX Measured Port			UEPPX	UEPXS	1.15	21.29	15.49	2.85	2.67						
	LOCAL NUMBER PORTABILITY																
		Local Number Portability (1 per port)			UEPPX	LNPCP	3.15	0.00	0.00								
	FEATURES																
		All Features Offered			UEPPX	UEPVF	0.00	0.00	0.00								
	NONRECURRING CHARGES (NRCs) - CURRENTLY COMBINED																
		2-Wire Voice Grade Loop/ Line Port Combination (PBX) - Conversion - Switch-As-Is			UEPPX	USAC2		8.45	1.91								
		2-Wire Voice Grade Loop/ Line Port Combination (PBX) - Conversion - Switch with Change			UEPPX	USACC		8.45	1.91								
	ADDITIONAL NRCs																
		2-Wire Voice Grade Loop/ Line Port Combination (PBX) - Subsequent Activity			UEPPX	USAS2	0.00	0.00	0.00								
		PBX Subsequent Activity - Change/Rearrange Multiline Hunt Group						7.86	7.86								
		Unbundled Miscellaneous Rate Element, Tag Loop at End User Premise			UEPPX	URETL		8.33	0.83								
	OFF/ON PREMISES EXTENSION CHANNELS																
		Local Channel Voice grade, per termination		1	UEPPX	P2JHX	12.67	134.89	81.87	73.65	14.88						
		Local Channel Voice grade, per termination		2	UEPPX	P2JHX	17.45	134.89	81.87	73.65	14.88						
		Local Channel Voice grade, per termination		3	UEPPX	P2JHX	33.22	134.89	81.87	73.65	14.88						
		Non-Wire Direct Serve Channel Voice Grade		1	UEPPX	SDD2X	12.68	170.06	78.10	119.62	15.80						
		Non-Wire Direct Serve Channel Voice Grade		2	UEPPX	SDD2X	18.12	170.06	78.10	119.62	15.80						
		Non-Wire Direct Serve Channel Voice Grade		3	UEPPX	SDD2X	29.64	170.06	78.10	119.62	15.00						
	INTEROFFICE TRANSPORT																
		Interoffice Transport - Dedicated - 2 Wire Voice Grade - Facility Termination			UEPPX	U1TV2	23.95	98.09	53.67	56.31	22.42						

UNBUNDLED NETWORK ELEMENTS - Kentucky														Attachment: 2		Exhibit: A	
CATEGORY		RATE ELEMENTS	Interim	Zone	BCS	USOC	RATES ($)					Svc Order Submitted Elec per LSR	Svc Order Submitted Manually per LSR	Incremental Charge - Manual Svc Order vs. Electronic-1st	Incremental Charge - Manual Svc Order vs. Electronic-Add'l	Incremental Charge - Manual Svc Order vs. Electronic-Disc 1st	Incremental Charge - Manual Svc Order vs. Electronic-Disc Add'l
							Rec	Nonrecurring		Nonrecurring Disconnect		OSS Rates ($)					
								First	Add'l	First	Add'l	SOMEC	SOMAN	SOMAN	SOMAN	SOMAN	SOMAN
		Interoffice Transport - Dedicated - 2 Wire Voice Grade - Per Mile or Fraction Mile			UEPPX	U1TVM	0.0095	0.00	0.00								
	2-WIRE VOICE GRADE LOOP WITH 2-WIRE ANALOG LINE COIN PORT																
	UNE Port/Loop Combination Rates																
		2-Wire VG Coin Port/Loop Combo – Zone 1		1			10.79										
		2-Wire VG Coin Port/Loop Combo – Zone 2		2			15.52										
		2-Wire VG Coin Port/Loop Combo – Zone 3		3			31.74										
	UNE Loop Rates																
		2-Wire Voice Grade Loop (SL1) - Zone 1		1	UEPCO	UEPLX	9.64										
		2-Wire Voice Grade Loop (SL1) - Zone 2		2	UEPCO	UEPLX	14.37										
		2-Wire Voice Grade Loop (SL1) - Zone 3		3	UEPCO	UEPLX	30.59										
	2-Wire Voice Grade Line Ports (COIN)																
		2-Wire Coin 2-Way without Operator Screening and without Blocking (AL, KY, LA, MS)			UEPCO	UEPRF	1.15	21.29	15.49	2.85	2.67						
		2-Wire Coin 2-Way with Operator Screening (AL, KY)			UEPCO	UEPRE	1.15	21.29	15.49	2.85	2.67						
		2-Wire Coin 2-Way with Operator Screening and Blocking: 011, 900/976, 1+DDD (AL, KY, LA, MS)			UEPCO	UEPRA	1.15	21.29	15.49	2.85	2.67						
		2-Wire Coin 2-Way with Operator Screening and 011 Blocking (KY)			UEPCO	UEPKA	1.15	21.29	15.49	2.85	2.67						
		2-Wire Coin 2-Way with Operator Screening & Blocking: 900/976, 1+DDD, 011+, & Local (AL, KY, LA, MS)			UEPCO	UEPCD	1.15	21.29	15.49	2.85	2.67						
		2-Wire Coin Outward without Blocking and without Operator Screening (KY, LA, MS)			UEPCO	UEPRN	1.15	21.29	15.49	2.85	2.67						
		2-Wire Coin Outward with Operator Screening and 011 Blocking (GA, KY, MS)			UEPCO	UEPRJ	1.15	21.29	15.49	2.85	2.67						
		2-Wire Coin Outward with Operator Screening and Blocking: 011, 900/976, 1+DDD (AL, KY, LA, MS)			UEPCO	UEPRH	1.15	21.29	15.49	2.85	2.67						
		2-Wire Coin Outward Operator Screening & Blocking: 900/976, 1+DDD, 011+, and Local (AL, KY, LA, MS)			UEPCO	UEPCN	1.15	21.29	15.49	2.85	2.67						
		2-Wire 2-Way Smartline with 900/976 (all states except LA)			UEPCO	UEPCK	1.15	21.29	15.49	2.85	2.67						
		2-Wire Coin Outward Smartline with 900/976 (all states except LA)			UEPCO	UEPCR	1.15	21.29	15.49	2.85	2.67						
	ADDITIONAL UNE COIN PORT/LOOP (RC)																
		UNE Coin Port/Loop Combo Usage (Flat Rate)			UEPCO	URECU	2.57	0.00	0.00	0.00	0.00						
	LOCAL NUMBER PORTABILITY																
		Local Number Portability (1 per port)			UEPCO	LNPCX	0.35										
	NONRECURRING CHARGES - CURRENTLY COMBINED																
		2-Wire Voice Grade Loop / Line Port Combination - Conversion - Switch-as-is			UEPCO	USAC2		0.10	0.10								
		2-Wire Voice Grade Loop / Line Port Combination - Conversion - Switch with change			UEPCO	USACC		0.10	0.10								
	ADDITIONAL NRCs																
		2-Wire Voice Grade Loop/Line Port Combination - Subsequent Activity			UEPCO	USAS2		0.00	0.00								
		Unbundled Miscellaneous Rate Element, Tag Loop at End User Premise			UEPCO	URETL		8.33	0.83								
	2-WIRE VOICE LOOP/ 2WIRE VOICE GRADE IO TRANSPORT/ 2-WIRE LINE PORT (RES)																
	UNE Port/Loop Combination Rates																
		2-Wire VG Loop/IO Tranport/Port Combo - Zone 1		1			13.90										
		2-Wire VG Loop/IO Tranport/Port Combo - Zone 2		2			18.68										
		2-Wire VG Loop/IO Tranport/Port Combo - Zone 3		3			34.45										
	UNE Loop Rates																
		2-Wire Voice Grade Loop (SL2) - Zone 1		1	UEPFR	UECF2	12.67										
		2-Wire Voice Grade Loop (SL2) - Zone 2		2	UEPFR	UECF2	17.45										
		2-Wire Voice Grade Loop (SL2) - Zone 3		3	UEPFR	UECF2	33.22										
	2-Wire Voice Grade Line Port Rates (Res)																
		2-Wire voice unbundled port - residence			UEPFR	UEPRL	1.23	128.96	64.11	61.92	9.97						
		2-Wire voice unbundled port with Caller ID - res			UEPFR	UEPRC	1.23	128.96	64.11	61.92	9.97						
		2-Wire voice unbundled port outgoing only - res			UEPFR	UEPRO	1.23	128.96	64.11	61.92	9.97						

UNBUNDLED NETWORK ELEMENTS - Kentucky														Attachment: 2		Exhibit: A	
CATEGORY		RATE ELEMENTS	Interim	Zone	BCS	USOC	RATES ($)					Svc Order Submitted Elec per LSR	Svc Order Submitted Manually per LSR	Incremental Charge - Manual Svc Order vs. Electronic-1st	Incremental Charge - Manual Svc Order vs. Electronic-Add'l	Incremental Charge - Manual Svc Order vs. Electronic-Disc 1st	Incremental Charge - Manual Svc Order vs. Electronic-Disc Add'l
							Rec	Nonrecurring		Nonrecurring Disconnect		OSS Rates ($)					
								First	Add'l	First	Add'l	SOMEC	SOMAN	SOMAN	SOMAN	SOMAN	SOMAN
		2-Wire voice Grade unbundled Kentucky extended local dialing parity port with Caller ID - res			UEPFR	UEPRM	1.23	128.96	64.11	61.92	9.97						
		2-Wire voice unbundles res, low usage line port with Caller ID (LUM)			UEPFR	UEPAP	1.23	128.96	64.11	61.92	9.97						
		2-Wire Voice Unbundled Kentucky Residence Dialing Plan without Caller ID			UEPFR	UEPWE	1.23	128.96	64.11	61.92	9.97						
	INTEROFFICE TRANSPORT																
		Interoffice Transport - Dedicated - 2 Wire Voice Grade - Facility Termination			UEPFR	U1TV2	23.95	98.09	53.67	56.31	22.42						
		Interoffice Transport - Dedicated - 2 Wire Voice Grade - Per Mile or Fraction Mile			UEPFR	1L5XX	0.0095										
	FEATURES																
		All Features Offered			UEPFR	UEPVF	0.00	0.00	0.00								
	LOCAL NUMBER PORTABILITY																
		Local Number Portability (1 per port)			UEPFR	LNPCX	0.35										
	NONRECURRING CHARGES (NRCs) - CURRENTLY COMBINED																
		2-Wire Loop / Dedicated IO Transport / 2 Wire Line Port Combination - Conversion - Switch-as-is			UEPFR	USAC2		9.03	1.87								
		2-Wire Loop / Dedicated IO Transport / 2 Wire Line Port Combination - Conversion - Switch-With-Change			UEPFR	USACC		9.03	1.87								
		Unbundled Miscellaneous Rate Element, Tag Designed Loop at End User Premise			UEPFR	URETN		11.21	1.10								
	2-WIRE VOICE LOOP/ 2WIRE VOICE GRADE IO TRANSPORT/ 2-WIRE LINE PORT (BUS)																
	UNE Port/Loop Combination Rates																
		2-Wire VG Loop/IO Tranport/Port Combo - Zone 1		1			13.90										
		2-Wire VG Loop/IO Tranport/Port Combo - Zone 2		2			18.68										
		2-Wire VG Loop/IO Tranport/Port Combo - Zone 3		3			34.45										
	UNE Loop Rates																
		2-Wire Voice Grade Loop (SL2) - Zone 1		1	UEPFB	UECF2	12.67										
		2-Wire Voice Grade Loop (SL2) - Zone 2		2	UEPFB	UECF2	17.45										
		2-Wire Voice Grade Loop (SL2) - Zone 3		3	UEPFB	UECF2	33.22										
	2-Wire Voice Grade Line Port (Bus)																
		2-Wire voice unbundled port without Caller ID - bus			UEPFB	UEPBL	1.23	128.96	64.11	61.92	9.97						
		2-Wire voice unbundled port with Caller + E484 ID - bus			UEPFB	UEPBC	1.23	128.96	64.11	61.92	9.97						
		2-Wire voice unbundled port outgoing only - bus			UEPFB	UEPBO	1.23	128.96	64.11	61.92	9.97						
		2-Wire voice Grade unbundled Kentucky extended local dialing parity port with Caller ID - bus			UEPFB	UEPBM	1.23	128.96	64.11	61.92	9.97						
		2-Wire voice unbundled incoming only port with Caller ID - Bus			UEPFB	UEPB1	1.23	128.96	64.11	61.92	9.97						
		2-Wire Voice Unbundled Kentucky Business Dialing Plan without Caller ID			UEPFB	UEPWF	1.23	128.96	64.11	61.92	9.97						
	LOCAL NUMBER PORTABILITY																
		Local Number Portability (1 per port)			UEPFB	LNPCX	0.35										
	INTEROFFICE TRANSPORT																
		Interoffice Transport - Dedicated - 2 Wire Voice Grade - Facility Termination			UEPFB	U1TV2	23.95	98.09	53.67	56.31	22.42						
		Interoffice Transport - Dedicated - 2 Wire Voice Grade - Per Mile or Fraction Mile			UEPFB	1L5XX	0.0095										
	FEATURES																
		All Features Offered			UEPFB	UEPVF	0.00	0.00	0.00								
	NONRECURRING CHARGES (NRCs) - CURRENTLY COMBINED																
		2-Wire Loop / Dedicated IO Transport / 2 Wire Line Port Combination - Conversion - Switch-as-is			UEPFB	USAC2		9.03	1.87								
		2-Wire Loop / Dedicated IO Transport / 2 Wire Line Port Combination - Conversion - Switch with change			UEPFB	USACC		9.03	1.87								
		Unbundled Miscellaneous Rate Element, Tag Designed Loop at End User Premise			UEPFB	URETN		11.21	1.10								
	2-WIRE VOICE LOOP/ 2WIRE VOICE GRADE IO TRANSPORT/ 2-WIRE LINE PORT (PBX)																
	UNE Port/Loop Combination Rates																
		2-Wire VG Loop/IO Tranport/Port Combo - Zone 1		1			13.90										

UNBUNDLED NETWORK ELEMENTS - Kentucky														Attachment: 2		Exhibit: A	
CATEGORY		RATE ELEMENTS	Interim	Zone	BCS	USOC	RATES ($)					Svc Order Submitted Elec per LSR	Svc Order Submitted Manually per LSR	Incremental Charge - Manual Svc Order vs. Electronic-1st	Incremental Charge - Manual Svc Order vs. Electronic-Add'l	Incremental Charge - Manual Svc Order vs. Electronic-Disc 1st	Incremental Charge - Manual Svc Order vs. Electronic-Disc Add'l
							Rec	Nonrecurring		Nonrecurring Disconnect		OSS Rates ($)					
								First	Add'l	First	Add'l	SOMEC	SOMAN	SOMAN	SOMAN	SOMAN	SOMAN
		2-Wire VG Loop/IO Tranport/Port Combo - Zone 2		2			18.68										
		2-Wire VG Loop/IO Tranport/Port Combo - Zone 3		3			34.45										
	UNE Loop Rates																
		2-Wire Voice Grade Loop (SL2) - Zone 1		1	UEPFP	UECF2	12.67										
		2-Wire Voice Grade Loop (SL2) - Zone 2		2	UEPFP	UECF2	17.45										
		2-Wire Voice Grade Loop (SL2) - Zone 3		3	UEPFP	UECF2	33.22										
	2-Wire Voice Grade Line Port Rates (BUS - PBX)																
		Line Side Unbundled Combination 2-Way PBX Trunk Port - Bus			UEPFP	UEPPC	1.23	164.27	78.65	75.05	8.73						
		Line Side Unbundled Outward PBX Trunk Port - Bus			UEPFP	UEPPO	1.23	164.27	78.65	75.05	8.73						
		Line Side Unbundled Incoming PBX Trunk Port - Bus			UEPFP	UEPP1	1.23	164.27	78.65	75.05	8.73						
		2-Wire Voice Unbundled PBX LD Terminal Ports			UEPFP	UEPLD	1.23	164.27	78.65	75.05	8.73						
		2-Wire Voice Unbundled 2-Way Combination PBX Usage Port			UEPFP	UEPXA	1.23	164.27	78.65	75.05	8.73						
		2-Wire Voice Unbundled PBX Toll Terminal Hotel Ports			UEPFP	UEPXB	1.23	164.27	78.65	75.05	8.73						
		2-Wire Voice Unbundled PBX LD DDD Terminals Port			UEPFP	UEPXC	1.23	164.27	78.65	75.05	8.73						
		2-Wire Voice Unbundled PBX LD Terminal Switchboard Port			UEPFP	UEPXD	1.23	164.27	78.65	75.05	8.73						
		2-Wire Voice Unbundled PBX LD Terminal Switchboard IDD Capable Port			UEPFP	UEPXE	1.23	164.27	78.65	75.05	8.73						
		2-Wire Voice Unbundled 2-Way PBX Kentucky Room Area Calling Port without LUD			UEPFP	UEPXF	1.23	164.27	78.65	75.05	8.73						
		2-Wire Voice Unbundled PBX Kentucky LUD Area Calling Port			UEPFP	UEPXG	1.23	164.27	78.65	75.05	8.73						
		2-Wire Voice Unbundled PBX Kentucky Premium Calling Port			UEPFP	UEPXH	1.23	164.27	78.65	75.05	8.73						
		2-Wire Voice Unbundled 2-Way Kentucky Area Calling Port without LUD			UEPFP	UEPXJ	1.23	164.27	78.65	75.05	8.73						
		2-Wire Voice Unbundled 2-Way PBX Hotel/Hospital Economy Administrative Calling Port			UEPFP	UEPXL	1.23	164.27	78.65	75.05	8.73						
		2-Wire Voice Unbundled 2-Way PBX Hotel/Hospital Economy Room Calling Port			UEPFP	UEPXM	1.23	164.27	78.65	75.05	8.73						
		2-Wire Voice Unbundled 1-Way Outgoing PBX Hotel/Hospital Discount Room Calling Port			UEPFP	UEPXO	1.23	164.27	78.65	75.05	8.73						
		2-Wire Voice Unbundled 1-Way Outgoing PBX Measured Port			UEPFP	UEPXS	1.23	164.27	78.65	75.05	8.73						
	LOCAL NUMBER PORTABILITY																
		Local Number Portability (1 per port)			UEPFP	LNPCP	3.15	0.00	0.00								
	INTEROFFICE TRANSPORT																
		Interoffice Transport - Dedicated - 2 Wire Voice Grade - Facility Termination			UEPFP	U1TV2	23.95	98.09	53.67	56.31	22.42						
		Interoffice Transport - Dedicated - 2 Wire Voice Grade - Per Mile or Fraction Mile			UEPFP	1L5XX	0.0095										
	FEATURES																
		All Features Offered			UEPFP	UEPVF	0.00	0.00	0.00								
	NONRECURRING CHARGES (NRCs) - CURRENTLY COMBINED																
		2-Wire Loop / Dedicated IO Transport / 2 Wire Line Port Combination - Conversion - Switch-as-is			UEPFP	USAC2		9.03	1.87								
		2-Wire Loop / Dedicated IO Transport / 2 Wire Line Port Combination - Conversion - Switch with change			UEPFP	USACC		9.03	1.87								
		Unbundled Miscellaneous Rate Element, Tag Designed Loop at End User Premise			UEPFP	URETN		11.21	1.10								
UNBUNDLED PORT/LOOP COMBINATIONS - COST BASED RATES																	
	2-WIRE VOICE GRADE LOOP- BUS ONLY - WITH 2-WIRE DID TRUNK PORT																
	UNE Port/Loop Combination Rates																
		2-Wire VG Loop/2-Wire DID Trunk Port Combo - UNE Zone 1		1			21.30										
		2-Wire VG Loop/2-Wire DID Trunk Port Combo - UNE Zone 2		2			26.08										
		2-Wire VG Loop/2-Wire DID Trunk Port Combo - UNE Zone 3		3			41.85										
	UNE Loop Rates																
		2-Wire Analog Voice Grade Loop - (SL2) - UNE Zone 1		1	UEPPX	UECD1	12.67										
		2-Wire Analog Voice Grade Loop - (SL2) - UNE Zone 2		2	UEPPX	UECD1	17.45										
		2-Wire Analog Voice Grade Loop - (SL2) - UNE Zone 3		3	UEPPX	UECD1	33.22										
	UNE Port Rate																
		Exchange Ports - 2-Wire DID Port			UEPPX	UEPD1	8.63	336.11	27.75	132.37	9.31						

UNBUNDLED NETWORK ELEMENTS - Kentucky													Attachment: 2		Exhibit: A	
CATEGORY	RATE ELEMENTS	Interim	Zone	BCS	USOC	RATES ($)					Svc Order Submitted Elec per LSR	Svc Order Submitted Manually per LSR	Incremental Charge - Manual Svc Order vs. Electronic-1st	Incremental Charge - Manual Svc Order vs. Electronic-Add'l	Incremental Charge - Manual Svc Order vs. Electronic-Disc 1st	Incremental Charge - Manual Svc Order vs. Electronic-Disc Add'l
						Rec	Nonrecurring		Nonrecurring Disconnect		OSS Rates ($)					
							First	Add'l	First	Add'l	SOMEC	SOMAN	SOMAN	SOMAN	SOMAN	SOMAN
	NONRECURRING CHARGES - CURRENTLY COMBINED															
	2-Wire Voice Grade Loop / 2-Wire DID Trunk Port Conversion with BellSouth Allowable Changes			UEPPX	USA1C		7.85	1.87								
	ADDITIONAL NRCs															
	2-Wire DID Subsequent Activity - Add Trunks, Per Trunk			UEPPX	USAS1		32.25	32.25								
	Unbundled Miscellaneous Rate Element, Tag Designed Loop at End User Premise			UEPPX	URETN		11.21	1.10								
	Telephone Number/Trunk Group Establisment Charges															
	DID Trunk Termination (One Per Port)			UEPPX	NDT	0.00	0.00	0.00								
	Additional DID Numbers for each Group of 20 DID Numbers			UEPPX	ND4	0.00	0.00	0.00								
	DID Numbers, Non- consecutive DID Numbers , Per Number			UEPPX	ND5	0.00	0.00	0.00								
	Reserve Non-Consecutive DID numbers			UEPPX	ND6	0.00	0.00	0.00								
	Reserve DID Numbers			UEPPX	NDV	0.00	0.00	0.00								
	LOCAL NUMBER PORTABILITY															
	Local Number Portability (1 per port)			UEPPX	LNPCP	3.15	0.00	0.00								
	2-WIRE ISDN DIGITAL GRADE LOOP WITH 2-WIRE ISDN DIGITAL LINE SIDE PORT															
	UNE Port/Loop Combination Rates															
	2W ISDN Digital Grade Loop/2W ISDN Digital Line Side Port - UNE Zone 1		1	UEPPB UEPPR		25.69										
	2W ISDN Digital Grade Loop/2W ISDN Digital Line Side Port - UNE Zone 2		2	UEPPB UEPPR		31.92										
	2W ISDN Digital Grade Loop/2W ISDN Digital Line Side Port - UNE Zone 3		3	UEPPB UEPPR		50.21										
	UNE Loop Rates															
	2-Wire ISDN Digital Grade Loop - UNE Zone 1		1	UEPPB UEPPR	USL2X	16.10										
	2-Wire ISDN Digital Grade Loop - UNE Zone 2		2	UEPPB UEPPR	USL2X	22.33										
	2-Wire ISDN Digital Grade Loop - UNE Zone 3		3	UEPPB UEPPR	USL2X	40.63										
	UNE Port Rate															
	Exchange Port - 2-Wire ISDN Line Side Port			UEPPB UEPPR	UEPPB	9.59	320.53	289.13	92.19	17.56						
	NONRECURRING CHARGES - CURRENTLY COMBINED															
	2-Wire ISDN Digital Grade Loop / 2-Wire ISDN Line Side Port Combination - Conversion			UEPPB UEPPR	USACB	0.00	22.77	17.00								
	ADDITIONAL NRCs															
	Unbundled Miscellaneous Rate Element, Tag Designed Loop at End User Premise			UEPPB UEPPR	URETN		11.21	1.10								
	Unbundled Miscellaneous Rate Element, Tag Loop at End User Premise			UEPPB UEPPR	URETL		8.33	0.83								
	LOCAL NUMBER PORTABILITY															
	Local Number Portability (1 per port)			UEPPB UEPPR	LNPCX	0.35	0.00	0.00								
	B-CHANNEL USER PROFILE ACCESS:															
	CVS/CSD (DMS/5ESS)			UEPPB UEPPR	U1UCA	0.00	0.00	0.00								
	CVS (EWSD)			UEPPB UEPPR	U1UCB	0.00	0.00	0.00								
	CSD			UEPPB UEPPR	U1UCC	0.00	0.00	0.00								
	B-CHANNEL AREA PLUS USER PROFILE ACCESS: (AL,KY,LA,MS SC,MS, & TN)															
	CVS/CSD (DMS/5ESS)			UEPPB UEPPR	U1UCD	0.00	0.00	0.00								
	CVS (EWSD)			UEPPB UEPPR	U1UCE	0.00	0.00	0.00								
	CSD			UEPPB UEPPR	U1UCF	0.00	0.00	0.00								
	USER TERMINAL PROFILE															
	User Terminal Profile (EWSD only)			UEPPB UEPPR	U1UMA	0.00	0.00	0.00								
	VERTICAL FEATURES															
	All Vertical Features - One per Channel B User Profile			UEPPB UEPPR	UEPVF	0.00	0.00	0.00								
	INTEROFFICE CHANNEL MILEAGE															
	Interoffice Channel mileage each, including first mile and facilities termination			UEPPB UEPPR	M1GNC	29.12	47.34	31.78	22.77	8.75						
	Interoffice Channel mileage each, additional mile			UEPPB UEPPR	M1GNM	0.01	0.00	0.00								
	4-WIRE DS1 DIGITAL LOOP WITH 4-WIRE ISDN DS1 DIGITAL TRUNK PORT															
	The UNE-P DS1 combination rates below for in this rate exhibit apply to the embedded base in place as of 10/2/03 until 4/1/04. After 4/1/04 these rates shall revert to tariff rates or a separate commercial agreement.															
	Requests for 4-Wire DS1 Digital Loop with 4-Wire ISDN DS1 Digital Trunk Port after the effective date of this amendment shall be provided pursuant to a separate agreement or tariff at BellSouth's discretion.															

UNBUNDLED NETWORK ELEMENTS - Kentucky													Attachment: 2		Exhibit: A	
CATEGORY	RATE ELEMENTS	Interim	Zone	BCS	USOC	RATES ($)					Svc Order Submitted Elec per LSR	Svc Order Submitted Manually per LSR	Incremental Charge - Manual Svc Order vs. Electronic-1st	Incremental Charge - Manual Svc Order vs. Electronic-Add'l	Incremental Charge - Manual Svc Order vs. Electronic-Disc 1st	Incremental Charge - Manual Svc Order vs. Electronic-Disc Add'l
						Rec	Nonrecurring		Nonrecurring Disconnect		OSS Rates ($)					
							First	Add'l	First	Add'l	SOMEC	SOMAN	SOMAN	SOMAN	SOMAN	SOMAN
	UNE Port/Loop Combination Rates															
	4W DS1 Digital Loop/4W ISDN DS1 Digital Trunk Port - UNE Zone 1		1	UEPPP		170.06										
	4W DS1 Digital Loop/4W ISDN DS1 Digital Trunk Port - UNE Zone 2		2	UEPPP		197.70										
	4W DS1 Digital Loop/4W ISDN DS1 Digital Trunk Port - UNE Zone 3		3	UEPPP		381.35										
	UNE Loop Rates															
	4-Wire DS1 Digital Loop - UNE Zone 1		1	UEPPP	USL4P	86.47										
	4-Wire DS1 Digital Loop - UNE Zone 2		2	UEPPP	USL4P	114.10										
	4-Wire DS1 Digital Loop - UNE Zone 3		3	UEPPP	USL4P	297.76										
	UNE Port Rate															
	Exchange Ports - 4-Wire ISDN DS1 Port (E:4/1/2004)			UEPPP	UEPPP	83.59	736.16	382.74	159.48	48.82						
	NONRECURRING CHARGES - CURRENTLY COMBINED															
	4-Wire DS1 Digital Loop / 4-Wire ISDN DS1 Digital Trunk Port Combination - Conversion -Switch-as-is (E:4/1/2004)			UEPPP	USACP	0.00	81.70	61.37								
	ADDITIONAL NRCs															
	4-Wire DS1 Loop/4-W ISDN Digtl Trk Port - Subsqt Actvy-Inward/two way Tel Nos. (except NC)			UEPPP	PR7TF		0.54									
	4-Wire DS1 Loop / 4-Wire ISDN DS1 Digital Trunk Port - Outward Tel Numbers (All States except NC)			UEPPP	PR7TO		12.71	12.71								
	4-Wire DS1 Loop / 4-Wire ISDN DS1 Digital Trk Port - Subsequent Inward Tel Numbers			UEPPP	PR7ZT		25.41	25.41								
	LOCAL NUMBER PORTABILITY															
	Local Number Portability (1 per port)			UEPPP	LNPCN	1.75										
	INTERFACE (Provsioning Only)															
	Voice/Data			UEPPP	PR71V	0.00	0.00	0.00								
	Digital Data			UEPPP	PR71D	0.00	0.00	0.00								
	Inward Data			UEPPP	PR71E	0.00	0.00	0.00								
	New or Additional "B" Channel															
	New or Additional - Voice/Data B Channel			UEPPP	PR7BV	0.00	15.48									
	New or Additional - Digital Data B Channel			UEPPP	PR7BF	0.00	15.48									
	New or Additional Inward Data B Channel			UEPPP	PR7BD	0.00	15.48									
	CALL TYPES															
	Inward			UEPPP	PR7C1	0.00	0.00	0.00								
	Outward			UEPPP	PR7CO	0.00	0.00	0.00								
	Two-way			UEPPP	PR7CC	0.00	0.00	0.00								
	Interoffice Channel Mileage															
	Fixed Each Including First Mile			UEPPP	1LN1A	96.27	105.52	98.46	23.09	20.49						
	Each Airline-Fractional Additional Mile			UEPPP	1LN1B	0.23										
	4-WIRE DS1 DIGITAL LOOP WITH 4-WIRE DDITS TRUNK PORT															
	The UNE-P DS1 combination rates below for in this rate exhibit apply to the embedded base in place as of 10/2/03 until 4/1/04. After 4/1/04 these rates shall revert to tariff rates or a separate commercial agreement.															
	Requests for 4-Wire DS1 Digital Loop with 4-Wire DDITS after the effective date of this amendment shall be provided pursuant to a separate agreement or tariff at BellSouth's discretion.															
	UNE Port/Loop Combination Rates															
	4W DS1 Digital Loop/4W DDITS Trunk Port - UNE Zone 1		1	UEPDC		147.99										
	4W DS1 Digital Loop/4W DDITS Trunk Port - UNE Zone 2		2	UEPDC		175.62										
	4W DS1 Digital Loop/4W DDITS Trunk Port - UNE Zone 3		3	UEPDC		359.28										
	UNE Loop Rates															
	4-Wire DS1 Digital Loop - UNE Zone 1		1	UEPDC	USLDC	86.47										
	4-Wire DS1 Digital Loop - UNE Zone 2		2	UEPDC	USLDC	114.10										
	4-Wire DS1 Digital Loop - UNE Zone 3		3	UEPDC	USLDC	297.76										
	UNE Port Rate															
	4-Wire DDITS Digital Trunk Port (E:4/1/2004)			UEPDC	UDD1T	61.52	780.61	375.52	176.19	16.98						
	NONRECURRING CHARGES - CURRENTLY COMBINED															
	4-Wire DS1 Digital Loop / 4-Wire DDITS Trunk Port Combination - Switch-as-is (E:4/1/2004)			UEPDC	USAC4		92.84	46.70								
	4-Wire DS1 Digital Loop / 4-Wire DDITS Trunk Port Combination - Conversion with DS1 Changes (E:4/1/2004)			UEPDC	USAWA		92.84	46.70								

UNBUNDLED NETWORK ELEMENTS - Kentucky													Attachment: 2		Exhibit: A	
CATEGORY	RATE ELEMENTS	Interim	Zone	BCS	USOC	RATES ($)					Svc Order Submitted Elec per LSR	Svc Order Submitted Manually per LSR	Incremental Charge - Manual Svc Order vs. Electronic-1st	Incremental Charge - Manual Svc Order vs. Electronic-Add'l	Incremental Charge - Manual Svc Order vs. Electronic-Disc 1st	Incremental Charge - Manual Svc Order vs. Electronic-Disc Add'l
						Rec	Nonrecurring		Nonrecurring Disconnect		OSS Rates ($)					
							First	Add'l	First	Add'l	SOMEC	SOMAN	SOMAN	SOMAN	SOMAN	SOMAN
	4-Wire DS1 Digital Loop / 4-Wire DDITS Trunk Port Combination - Conversion with Change - Trunk (E:4/1/2004)			UEPDC	USAWB		92.84	46.70								
ADDITIONAL NRCs																
	4-Wire DS1 Loop / 4-Wire DDITS Trunk Port - NRC - Subsequent Channel Activation/Chan - 2-Way Trunk			UEPDC	UDTTA		15.09	15.09								
	4-Wire DS1 Loop / 4-Wire DDITS Trunk Port - Subsequent Channel Activation/Chan - 1-Way Outward Trunk			UEPDC	UDTTB		15.09	15.09								
	4-Wire DS1 Loop / 4-Wire DDITS Trunk Port - Subsqnt Channel Activation/Chan Inward Trunk w/out DID			UEPDC	UDTTC		15.09	15.09								
	4-Wire DS1 Loop / 4-Wire DDITS Trunk Port - Subsqnt Chan Activation Per Chan - Inward Trunk with DID			UEPDC	UDTTD		15.09	15.09								
	4-Wire DS1 Loop / 4-Wire DDITS Trunk Port - Subsqnt Chan Activation / Chan - 2-Way DID w User Trans			UEPDC	UDTTE		15.09	15.09								
BIPOLAR 8 ZERO SUBSTITUTION																
	B8ZS -Superframe Format			UEPDC	CCOSF		0.00i	730.00s								
	B8ZS - Extended Superframe Format			UEPDC	CCOEF		0.00i	730.00s								
Alternate Mark Inversion																
	AMI -Superframe Format			UEPDC	MCOSF		0.00	0.00								
	AMI - Extended SuperFrame Format			UEPDC	MCOPO		0.00	0.00								
Telephone Number/Trunk Group Establisment Charges																
	Telephone Number for 2-Way Trunk Group			UEPDC	UDTGX	0.00	0.00	0.00								
	Telephone Number for 1-Way Outward Trunk Group			UEPDC	UDTGY	0.00		0.00								
	Telephone Number for 1-Way Inward Trunk Group Without DID			UEPDC	UDTGZ	0.00	0.00	0.00								
	DID Numbers for each Group of 20 DID Numbers			UEPDC	ND4	0.00	0.00	0.00								
	DID Numbers, Non- consecutive DID Numbers , Per Number			UEPDC	ND5	0.00	0.00	0.00								
	Reserve Non-Consecutive DID Nos.			UEPDC	ND6	0.00	0.00	0.00								
	Reserve DID Numbers			UEPDC	NDV	0.00	0.00	0.00								
Dedicated DS1 (Interoffice Channel Mileage) - FX/FCO for 4-Wire DS1 Digital Loop with 4-Wire DDITS Trunk Port																
	Interoffice Channel Mileage - Fixed rate 0-8 miles (Facilities Termination)			UEPDC	1LNO1	96.04	105.52	98.46	23.09	20.49						
	Interoffice Channel Mileage - Additional rate per mile - 0-8 miles			UEPDC	1LNOA	0.23	0.00	0.00								
	Interoffice Channel Mileage - Fixed rate 9-25 miles (Facilities Termination)			UEPDC	1LNO2	0.00	0.00	0.00								
	Interoffice Channel Mileage - Additional rate per mile - 9-25 miles			UEPDC	1LNOB	0.45	0.00	0.00								
	Interoffice Channel Mileage - Fixed rate 25+ miles (Facilities Termination)			UEPDC	1LNO3	0.00	0.00	0.00								
	Interoffice Channel Mileage - Additional rate per mile - 25+ miles			UEPDC	1LNOC	0.45	0.00	0.00								
	Local Number Portability, per DS0 Activated			UEPDC	LNPCP	3.15	0.00	0.00								
	Central Office Termininating Point			UEPDC	CTG	0.00										
4-WIRE DS1 LOOP WITH CHANNELIZATION WITH PORT																
System is 1 DS1 Loop, 1 D4 Channel Bank, and up to 24 Feature Activations																
Each System can have up to 24 combinations of rates depending on type and number of ports used																
The UNE-P DS1 combination rates below for 4-Wire DS1 Loop with Channelization with Port in this rate exhibit apply to the embedded base in place as of 10/2/03 until 4/1/04. After 4/1/04 these rates shall revert to tariff rates or a separate agreement.																
Requests for 4-Wire DS1 Loop with Channelization with Port after the effective date of this amendment shall be provided pursuant to a separate agreement or tariff at BellSouth's discretion.																
UNE DS1 Loop																
	4-Wire DS1 Loop - UNE Zone 1		1	UEPMG	USLDC	86.47	0.00	0.00								
	4-Wire DS1 Loop - UNE Zone 2		2	UEPMG	USLDC	114.10	0.00	0.00								
	4-Wire DS1 Loop - UNE Zone 3		3	UEPMG	USLDC	297.76	0.00	0.00								
UNE DSO Channelization Capacities (D4 Channel Bank Configurations)																
	24 DSO Channel Capacity - 1 per DS1			UEPMG	VUM24	111.16	0.00	0.00								
	48 DSO Channel Capacity - 1 per 2 DS1s			UEPMG	VUM48	222.32	0.00	0.00								
	96 DSO Channel Capacity -1per 4 DS1s			UEPMG	VUM96	444.64	0.00	0.00								
	144 DS0 Channel Capacity - 1 per 6 DS1s			UEPMG	VUM14	666.96	0.00	0.00								
	192 DS0 Channel Capacity -1 per 8 DS1s			UEPMG	VUM19	889.28	0.00	0.00								
	240 DS0 Channel Capacity - 1 per 10 DS1s			UEPMG	VUM2O	1,111.60	0.00	0.00								
	288 DS0 Channel Capacity - 1 per 12 DS1s			UEPMG	VUM28	1,333.92	0.00	0.00								

UNBUNDLED NETWORK ELEMENTS - Kentucky														Attachment: 2		Exhibit: A	
CATEGORY	RATE ELEMENTS	Interim	Zone	BCS	USOC	RATES ($)					Svc Order Submitted Elec per LSR	Svc Order Submitted Manually per LSR	Incremental Charge - Manual Svc Order vs. Electronic-1st	Incremental Charge - Manual Svc Order vs. Electronic-Add'l	Incremental Charge - Manual Svc Order vs. Electronic-Disc 1st	Incremental Charge - Manual Svc Order vs. Electronic-Disc Add'l
						Rec	Nonrecurring		Nonrecurring Disconnect		OSS Rates ($)					
							First	Add'l	First	Add'l	SOMEC	SOMAN	SOMAN	SOMAN	SOMAN	SOMAN
	384 DS0 Channel Capacity - 1 per 16 DS1s			UEPMG	VUM38	1,778.56	0.00	0.00								
	480 DS0 Channel Capacity - 1 per 20 DS1s			UEPMG	VUM4O	2,223.20	0.00	0.00								
	576 DS0 Channel Capacity -1 per 24 DS1s			UEPMG	VUM57	2,667.84	0.00	0.00								
	672 DS0 Channel Capacity - 1 per 28 DS1s			UEPMG	VUM67	3,112.48	0.00	0.00								
Non-Recurring Charges (NRC) Associated with 4-Wire DS1 Loop with Channeliztion with Port - Conversion Charge Based on a System																
A Minimum System configuration is One (1) DS1, One (1) D4 Channel Bank, and Up To 24 DSO Ports with Feature Activations.																
Multiples of this configuration functioning as one are considered Add'l after the minimum system configuration is counted.																
	NRC - Conversion (Currently Combined) with or without BellSouth Allowed Changes			UEPMG	USAC4	0.00	94.30	4.24								
System Additions at End User Locations Where 4-Wire DS1 Loop with Channelization with Port Combination Currently Exists and																
New (Not Currently Combined) in all states, except in Density Zone 1 of Top 8 MSA's																
	1 DS1/D4 Channel Bank - Additionally Add NRC for each Port and Assoc Fea Activation (E:4/1/2004)			UEPMG	VUMD4	0.00	718.89	469.86	149.83	17.77						
Bipolar 8 Zero Substitution																
	Clear Channel Capability Format, superframe - Subsequent Activity Only			UEPMG	CCOSF	0.00	0.00i	730.00s								
	Clear Channel Capability Format - Extended Superframe - Subsequent Activity Only			UEPMG	CCOEF	0.00	0.00i	730.00s								
Alternate Mark Inversion (AMI)																
	Superframe Format			UEPMG	MCOSF	0.00	0.00	0.00								
	Extended Superframe Format			UEPMG	MCOPO	0.00	0.00	0.00								
Exchange Ports Associated with 4-Wire DS1 Loop with Channelization with Port																
Exchange Ports																
	Line Side Combination Channelized PBX Trunk Port - Business (E:4/1/2004)			UEPPX	UEPCX	1.15	0.00	0.00	0.00	0.00						
	Line Side Outward Channelized PBX Trunk Port - Business (E:4/1/2004)			UEPPX	UEPOX	1.15	0.00	0.00	0.00	0.00						
	Line Side Inward Only Channelized PBX Trunk Port without DID (E:4/1/2004)			UEPPX	UEP1X	1.15	0.00	0.00	0.00	0.00						
	2-Wire Trunk Side Unbundled Channelized DID Trunk Port (E:4/1/2004)			UEPPX	UEPDM	8.65	0.00	0.00	0.00	0.00						
	Unbundled Exchange Ports, 2-Wire Channelized – Outdial – (AL, KY, LA, MS, & TN)(Conversion from Network Access Service) (E:4/1/2004)			UEPPX	UEPCY	1.15	0.00	0.00	0.00	0.00						
	Unbundled Exchange Ports, 2-Wire Channelized – Combination (AL, KY, LA, MS, & TN) (Conversion from Network Access Service) (E:4/1/2004)			UEPPX	UEPCT	1.15	0.00	0.00	0.00	0.00						
	Unbundled Exchange Ports, 2-Wire Channelized – Outdial – Kentucky Only – Calling Plan (E:4/1/2004)			UEPPX	UEPCV	1.15	0.00	0.00	0.00	0.00						
	Unbundled Exchange Ports, 2-Wire Channelized – Two Way - Kentucky Only – Calling Plan (E:4/1/2004)			UEPPX	UEPCW	1.15	0.00	0.00	0.00	0.00						
Feature Activations - Unbundled Loop Concentration																
	Feature (Service) Activation for each Line Port Terminated in D4 Bank			UEPPX	1PQWM	0.62	25.40	13.41	4.17	4.15						
	Feature (Service) Activation for each Trunk Port Terminated in D4 Bank			UEPPX	1PQWU	0.62	78.15	19.68	59.05	11.54						
Telephone Number/ Group Establishment Charges for DID Service																
	DID Trunk Termination (1 per Port)			UEPPX	NDT	0.00	0.00	0.00								
	DID Numbers - groups of 20 - Valid all States			UEPPX	ND4	0.00	0.00	0.00								
	Non-Consecutive DID Numbers - per number			UEPPX	ND5	0.00	0.00	0.00								
	Reserve Non-Consecutive DID Numbers			UEPPX	ND6	0.00	0.00	0.00								
	Reserve DID Numbers			UEPPX	NDV	0.00	0.00	0.00								
Local Number Portability																
	Local Number Portability - 1 per port			UEPPX	LNPCP	3.15	0.00	0.00								
FEATURES - Vertical and Optional																
Local Switching Features Offered with Line Side Ports Only																
	All Features Available			UEPPX	UEPVF	0.00	0.00	0.00								
UNBUNDLED CENTREX PORT/LOOP COMBINATIONS - COST BASED RATES																
1. Cost Based Rates are applied where BellSouth is required by FCC and/or State Commission rule to provide Unbundled Local Switching or Switch Ports.																

UNBUNDLED NETWORK ELEMENTS - Kentucky													Attachment: 2		Exhibit: A	
CATEGORY	RATE ELEMENTS	Interim	Zone	BCS	USOC	RATES ($)					Svc Order Submitted Elec per LSR	Svc Order Submitted Manually per LSR	Incremental Charge - Manual Svc Order vs. Electronic-1st	Incremental Charge - Manual Svc Order vs. Electronic-Add'l	Incremental Charge - Manual Svc Order vs. Electronic-Disc 1st	Incremental Charge - Manual Svc Order vs. Electronic-Disc Add'l
						Rec	Nonrecurring		Nonrecurring Disconnect		OSS Rates ($)					
							First	Add'l	First	Add'l	SOMEC	SOMAN	SOMAN	SOMAN	SOMAN	SOMAN
	2. Features shall apply to the Unbundled Port/Loop Combination - Cost Based Rate section in the same manner as they are applied to the Stand-Alone Unbundled Port section of this Rate Exhibit.															
	3. End Office and Tandem Switching Usage and Common Transport Usage rates in the Port section of this rate exhibit shall apply to all combinations of loop/port network elements except for UNE Coin Port/Loop Combinations.															
	4. The first and additional Port nonrecurring charges apply to Not Currently Combined Combos. For Currently Combined Combos, the nonrecurring charges shall be those identified in the Nonrecurring - Currently Combined sections. Additional NRCs may apply also and are categorized accordingly.															
	5. Market Rates for Unbundled Centrex Port/Loop Combination will be negotiated on an Individual Case Basis, until further notice.															
	UNE-P CENTREX - 1AESS - (Valid in AL,FL,GA,KY,LA,MS,&TN only)															
	2-Wire VG Loop/2-Wire Voice Grade Port (Centrex) Combo															
	UNE Port/Loop Combination Rates (Non-Design)															
	2-Wire VG Loop/2-Wire Voice Grade Port (Centrex) Port Combo - Non-Design		1	UEP91		10.79										
	2-Wire VG Loop/2-Wire Voice Grade Port (Centrex)Port Combo - Non-Design		2	UEP91		15.52										
	2-Wire VG Loop/2-Wire Voice Grade Port (Centrex)Port Combo - Non-Design		3	UEP91		31.74										
	UNE Port/Loop Combination Rates (Design)															
	2-Wire VG Loop/2-Wire Voice Grade Port (Centrex) Port Combo - Design		1	UEP91		13.82										
	2-Wire VG Loop/2-Wire Voice Grade Port (Centrex)Port Combo - Design		2	UEP91		18.60										
	2-Wire VG Loop/2-Wire Voice Grade Port (Centrex)Port Combo - Design		3	UEP91		34.37										
	UNE Loop Rate															
	2-Wire Voice Grade Loop (SL 1) - Zone 1		1	UEP91	UECS1	9.64										
	2-Wire Voice Grade Loop (SL 1) - Zone 2		2	UEP91	UECS1	14.37										
	2-Wire Voice Grade Loop (SL 1) - Zone 3		3	UEP91	UECS1	30.59										
	2-Wire Voice Grade Loop (SL 2) - Zone 1		1	UEP91	UECS2	12.67										
	2-Wire Voice Grade Loop (SL 2) - Zone 2		2	UEP91	UECS2	17.45										
	2-Wire Voice Grade Loop (SL 2) - Zone 3		3	UEP91	UECS2	33.22										
	UNE Ports															
	All States (Except North Carolina and Sout Carolina)															
	2-Wire Voice Grade Port (Centrex) Basic Local Area			UEP91	UEPYA	1.15	21.29	15.49	2.85	2.67						
	2-Wire Voice Grade Port (Centrex 800 termination)Basic Local Area			UEP91	UEPYB	1.15	21.29	15.49	2.85	2.67						
	2-Wire Voice Grade Port (Centrex with Caller ID)Note1 Basic Local Area			UEP91	UEPYH	1.15	21.29	15.49	2.85	2.67						
	2-Wire Voice Grade Port (Centrex from diff Serving Wire Center) Note 2, 3 Basic Local Area			UEP91	UEPYM	1.15	21.29	15.49	2.85	2.67						
	2-Wire Voice Grade Port, Diff Serving Wire Center - 800 Service Term - Basic Local Area			UEP91	UEPYZ	1.15	21.29	15.49	2.85	2.67						
	2-Wire Voice Grade Port terminated in on Megalink or equivalent - Basic Local Area			UEP91	UEPY9	1.15	21.29	15.49	2.85	2.67						
	2-Wire Voice Grade Port Terminated on 800 Service Term - Basic Local Area			UEP91	UEPY2	1.15	21.29	15.49	2.85	2.67						
	AL, KY, LA, MS, & TN Only															
	2-Wire Voice Grade Port (Centrex)			UEP91	UEPQA	1.15	21.29	15.49	2.85	2.67						
	2-Wire Voice Grade Port (Centrex 800 termination)			UEP91	UEPQB	1.15	21.29	15.49	2.85	2.67						
	2-Wire Voice Grade Port (Centrex with Caller ID)1			UEP91	UEPQH	1.15	21.29	15.49	2.85	2.67						
	2-Wire Voice Grade Port (Centrex from diff Serving Wire Center)2,3			UEP91	UEPQM	1.15	21.29	15.49	2.85	2.67						
	2-Wire Voice Grade Port, Diff Serving Wire Center - 2,3 - 800 Service Term			UEP91	UEPQZ	1.15	21.29	15.49	2.85	2.67						
	2-Wire Voice Grade Port terminated in on Megalink or equivalent			UEP91	UEPQ9	1.15	21.29	15.49	2.85	2.67						
	2-Wire Voice Grade Port Terminated on 800 Service Term			UEP91	UEPQ2	1.15	21.29	15.49	2.85	2.67						
	Local Switching															
	Centrex Intercom Funtionality, per port			UEP91	URECS	0.8873										
	Local Number Portability															
	Local Number Portability (1 per port)			UEP91	LNPCC	0.35										
	Features															

UNBUNDLED NETWORK ELEMENTS - Kentucky														Attachment: 2		Exhibit: A	
CATEGORY		RATE ELEMENTS	Interim	Zone	BCS	USOC	RATES ($)					Svc Order Submitted Elec per LSR	Svc Order Submitted Manually per LSR	Incremental Charge - Manual Svc Order vs. Electronic-1st	Incremental Charge - Manual Svc Order vs. Electronic-Add'l	Incremental Charge - Manual Svc Order vs. Electronic-Disc 1st	Incremental Charge - Manual Svc Order vs. Electronic-Disc Add'l
							Rec	Nonrecurring		Nonrecurring Disconnect		OSS Rates ($)					
								First	Add'l	First	Add'l	SOMEC	SOMAN	SOMAN	SOMAN	SOMAN	SOMAN
		All Standard Features Offered, per port			UEP91	UEPVF	0.00										
		All Select Features Offered, per port			UEP91	UEPVS	0.00	405.66									
		All Centrex Control Features Offered, per port			UEP91	UEPVC	0.00										
	NARS																
		Unbundled Network Access Register - Combination			UEP91	UARCX	0.00	0.00	0.00	0.00	0.00						
		Unbundled Network Access Register - Indial			UEP91	UAR1X	0.00	0.00	0.00	0.00	0.00						
		Unbundled Network Access Register - Outdial			UEP91	UAROX	0.00	0.00	0.00	0.00	0.00						
	Miscellaneous Terminations																
	2-Wire Trunk Side																
		Trunk Side Terminations, each			UEP91	CENA6	10.51	92.18	15.82	52.16	5.30						
	Interoffice Channel Mileage - 2-Wire																
		Interoffice Channel Facilities Termination - Voice Grade			UEP91	M1GBC	29.11										
		Interoffice Channel mileage, per mile or fraction of mile			UEP91	M1GBM	0.01										
	Feature Activations (DS0) Centrex Loops on Channelized DS1 Service																
	D4 Channel Bank Feature Activations																
		Feature Activation on D-4 Channel Bank Centrex Loop Slot			UEP91	1PQWS	0.62										
		Feature Activation on D-4 Channel Bank FX line Side Loop Slot			UEP91	1PQW6	0.62										
		Feature Activation on D-4 Channel Bank FX Trunk Side Loop Slot			UEP91	1PQW7	0.62										
		Feature Activation on D-4 Channel Bank Centrex Loop Slot - Different Wire Center			UEP91	1PQWP	0.62										
		Feature Activation on D-4 Channel Bank Private Line Loop Slot			UEP91	1PQWV	0.62										
		Feature Activation on D-4 Channel Bank Tjie Line/Trunk Loop Slot			UEP91	1PQWQ	0.62										
		Feature Activation on D-4 Channel Bank WATS Loop Slot			UEP91	1PQWA	0.62										
	Non-Recurring Charges (NRC) Associated with UNE-P Centrex																
		Conversion - Currently Combined Switch-As-Is with allowed changes, per port			UEP91	USAC2		0.102	0.102								
		Conversion of Existing Centrex Common Block			UEP91	USACN		18.95	8.32								
		New Centrex Standard Common Block			UEP91	M1ACS	0.00	669.80	78.32	111.05	13.27						
		New Centrex Customized Common Block			UEP91	M1ACC	0.00	669.80	78.32	111.05	13.27						
		Secondary Block, per Block			UEP91	M2CC1	0.00	78.32	78.32	13.27	13.27						
		NAR Establishment Charge, Per Occasion			UEP91	URECA	0.00	72.75									
	Additional Non-Recurring Charges (NRC)																
		Unbundled Miscellaneous Rate Element, Tag Loop at End Use Premise			UEP91	URETL		8.33	0.83								
		Unbundled Miscellaneous Rate Element, Tag Design Loop at End Use Premise			UEP91	URETN		11.21	1.10								
	UNE-P CENTREX - 5ESS (Valid in All States)																
	2-Wire VG Loop/2-Wire Voice Grade Port (Centrex) Combo																
	UNE Port/Loop Combination Rates (Non-Design)																
		2-Wire VG Loop/2-Wire Voice Grade Port (Centrex) Port Combo - Non-Design		1	UEP95		10.79										
		2-Wire VG Loop/2-Wire Voice Grade Port (Centrex)Port Combo - Non-Design		2	UEP95		15.52										
		2-Wire VG Loop/2-Wire Voice Grade Port (Centrex)Port Combo - Non-Design		3	UEP95		31.74										
	UNE Port/Loop Combination Rates (Design)																
		2-Wire VG Loop/2-Wire Voice Grade Port (Centrex) Port Combo - Design		1	UEP95		13.82										
		2-Wire VG Loop/2-Wire Voice Grade Port (Centrex)Port Combo - Design		2	UEP95		18.60										
		2-Wire VG Loop/2-Wire Voice Grade Port (Centrex)Port Combo - Design		3	UEP95		34.37										
	UNE Loop Rate																
		2-Wire Voice Grade Loop (SL 1) - Zone 1		1	UEP95	UECS1	9.64										
		2-Wire Voice Grade Loop (SL 1) - Zone 2		2	UEP95	UECS1	14.37										

UNBUNDLED NETWORK ELEMENTS - Kentucky														Attachment: 2		Exhibit: A	
CATEGORY		RATE ELEMENTS	Interim	Zone	BCS	USOC	RATES ($)					Svc Order Submitted Elec per LSR	Svc Order Submitted Manually per LSR	Incremental Charge - Manual Svc Order vs. Electronic-1st	Incremental Charge - Manual Svc Order vs. Electronic-Add'l	Incremental Charge - Manual Svc Order vs. Electronic-Disc 1st	Incremental Charge - Manual Svc Order vs. Electronic-Disc Add'l
							Rec	Nonrecurring		Nonrecurring Disconnect		OSS Rates ($)					
								First	Add'l	First	Add'l	SOMEC	SOMAN	SOMAN	SOMAN	SOMAN	SOMAN
		2-Wire Voice Grade Loop (SL 1) - Zone 3		3	UEP95	UECS1	30.59										
		2-Wire Voice Grade Loop (SL 2) - Zone 1		1	UEP95	UECS2	12.67										
		2-Wire Voice Grade Loop (SL 2) - Zone 2		2	UEP95	UECS2	17.45										
		2-Wire Voice Grade Loop (SL 2) - Zone 3		3	UEP95	UECS2	33.22										
	UNE Port Rate																
	All States																
		2-Wire Voice Grade Port (Centrex) Basic Local Area			UEP95	UEPYA	1.15	21.29	15.49	2.85	2.67						
		2-Wire Voice Grade Port (Centrex 800 termination)			UEP95	UEPYB	1.15	21.29	15.49	2.85	2.67						
		2-Wire Voice Grade Port (Centrex with Caller ID)1Basic Local Area			UEP95	UEPYH	1.15	21.29	15.49	2.85	2.67						
		2-Wire Voice Grade Port (Centrex from diff Serving Wire Center)2,3 Basic Local Area			UEP95	UEPYM	1.15	21.29	15.49	2.85	2.67						
		2-Wire Voice Grade Port, Diff Serving Wire Center 2,3 - 800 Service Term - Basic Local Area			UEP95	UEPYZ	1.15	21.29	15.49	2.85	2.67						
		2-Wire Voice Grade Port terminated in on Megalink or equivalent - Basic Local Area			UEP95	UEPY9	1.15	21.29	15.49	2.85	2.67						
		2-Wire Voice Grade Port Terminated on 800 Service Term - Basic Local Area			UEP95	UEPY2	1.15	21.29	15.49	2.85	2.67						
	AL, KY, LA, MS, SC, & TN Only																
		2-Wire Voice Grade Port (Centrex)			UEP95	UEPQA	1.15	21.29	15.49	2.85	2.67						
		2-Wire Voice Grade Port (Centrex 800 termination)			UEP95	UEPQB	1.15	21.29	15.49	2.85	2.67						
		2-Wire Voice Grade Port (Centrex with Caller ID)1			UEP95	UEPQH	1.15	21.29	15.49	2.85	2.67						
		2-Wire Voice Grade Port (Centrex from diff Serving Wire Center)2,3			UEP95	UEPQM	1.15	21.29	15.49	2.85	2.67						
		2-Wire Voice Grade Port, Diff Serving Wire Center - 800 Service Term 2,3			UEP95	UEPQZ	1.15	21.29	15.49	2.85	2.67						
		2-Wire Voice Grade Port terminated in on Megalink or equivalent			UEP95	UEPQ9	1.15	21.29	15.49	2.85	2.67						
		2-Wire Voice Grade Port Terminated on 800 Service Term			UEP95	UEPQ2	1.15	21.29	15.49	2.85	2.67						
	Local Switching																
		Centrex Intercom Funtionality, per port			UEP95	URECS	0.8873										
	Local Number Portability																
		Local Number Portability (1 per port)			UEP95	LNPCC	0.35										
	Features																
		All Standard Features Offered, per port			UEP95	UEPVF	0.00										
		All Select Features Offered, per port			UEP95	UEPVS	0.00	405.66									
		All Centrex Control Features Offered, per port			UEP95	UEPVC	0.00										
	NARS																
		Unbundled Network Access Register - Combination			UEP95	UARCX	0.00	0.00	0.00	0.00	0.00						
		Unbundled Network Access Register - Indial			UEP95	UAR1X	0.00	0.00	0.00	0.00	0.00						
		Unbundled Network Access Register - Outdial			UEP95	UAROX	0.00	0.00	0.00	0.00	0.00						
	Miscellaneous Terminations																
	2-Wire Trunk Side																
		Trunk Side Terminations, each			UEP95	CEND6	10.51	92.18	15.82	52.16	5.30						
	4-Wire Digital (1.544 Megabits)																
		DS1 Circuit Terminations, each			UEP95	M1HD1	74.77	164.86	77.74	60.69	3.86						
		DS0 Channels Activated, each			UEP95	M1HDO	0.00	15.09									
	Interoffice Channel Mileage - 2-Wire																
		Interoffice Channel Facilities Termination			UEP95	M1GBC	29.11										
		Interoffice Channel mileage, per mile or fraction of mile			UEP95	M1GBM	0.01										
	Feature Activations (DS0) Centrex Loops on Channelized DS1 Service																
	D4 Channel Bank Feature Activations																
		Feature Activation on D-4 Channel Bank Centrex Loop Slot			UEP95	1PQWS	0.62										
		Feature Activation on D-4 Channel Bank FX line Side Loop Slot			UEP95	1PQW6	0.62										
		Feature Activation on D-4 Channel Bank FX Trunk Side Loop Slot			UEP95	1PQW7	0.62										
		Feature Activation on D-4 Channel Bank Centrex Loop Slot - Different Wire Center			UEP95	1PQWP	0.62										

UNBUNDLED NETWORK ELEMENTS - Kentucky														Attachment: 2		Exhibit: A	
CATEGORY		RATE ELEMENTS	Interim	Zone	BCS	USOC	RATES ($)					Svc Order Submitted Elec per LSR	Svc Order Submitted Manually per LSR	Incremental Charge - Manual Svc Order vs. Electronic-1st	Incremental Charge - Manual Svc Order vs. Electronic-Add'l	Incremental Charge - Manual Svc Order vs. Electronic-Disc 1st	Incremental Charge - Manual Svc Order vs. Electronic-Disc Add'l
							Rec	Nonrecurring		Nonrecurring Disconnect		OSS Rates ($)					
								First	Add'l	First	Add'l	SOMEC	SOMAN	SOMAN	SOMAN	SOMAN	SOMAN
		Feature Activation on D-4 Channel Bank Private Line Loop Slot			UEP95	1PQWV	0.62										
		Feature Activation on D-4 Channel Bank Tjie Line/Trunk Loop Slot			UEP95	1PQWQ	0.62										
		Feature Activation on D-4 Channel Bank WATS Loop Slot			UEP95	1PQWA	0.62										
	Non-Recurring Charges (NRC) Associated with UNE-P Centrex																
		NRC Conversion Currently Combined Switch-As-Is with allowed changes, per port			UEP95	USAC2		0.102	0.102								
		Conversion of Existing Centrex Common Block, each			UEP95	USACN		18.95	8.32								
		New Centrex Standard Common Block			UEP95	M1ACS	0.00	669.80	78.32	111.05	13.27						
		New Centrex Customized Common Block			UEP95	M1ACC	0.00	669.80	78.32	111.05	13.27						
		NAR Establishment Charge, Per Occasion			UEP95	URECA	0.00	72.75									
	Additional Non-Recurring Charges (NRC)																
		Unbundled Miscellaneous Rate Element, Tag Loop at End Use Premise			UEP95	URETL		8.33	0.83								
		Unbundled Miscellaneous Rate Element, Tag Design Loop at End Use Premise			UEP95	URETN		11.21	1.10								
	UNE-P CENTREX - DMS100 (Valid in All States)																
	2-Wire VG Loop/2-Wire Voice Grade Port (Centrex) Combo																
	UNE Port/Loop Combination Rates (Non-Design)																
		2-Wire VG Loop/2-Wire Voice Grade Port (Centrex) Port Combo - Non-Design		1	UEP9D		10.79										
		2-Wire VG Loop/2-Wire Voice Grade Port (Centrex)Port Combo - Non-Design		2	UEP9D		15.52										
		2-Wire VG Loop/2-Wire Voice Grade Port (Centrex)Port Combo - Non-Design		3	UEP9D		31.74										
	UNE Port/Loop Combination Rates (Design)																
		2-Wire VG Loop/2-Wire Voice Grade Port (Centrex) Port Combo - Design		1	UEP9D		13.82										
		2-Wire VG Loop/2-Wire Voice Grade Port (Centrex)Port Combo - Design		2	UEP9D		18.60										
		2-Wire VG Loop/2-Wire Voice Grade Port (Centrex)Port Combo - Design		3	UEP9D		34.37										
	UNE Loop Rate																
		2-Wire Voice Grade Loop (SL 1) - Zone 1		1	UEP9D	UECS1	9.64										
		2-Wire Voice Grade Loop (SL 1) - Zone 2		2	UEP9D	UECS1	14.37										
		2-Wire Voice Grade Loop (SL 1) - Zone 3		3	UEP9D	UECS1	30.59										
		2-Wire Voice Grade Loop (SL 2) - Zone 1		1	UEP9D	UECS2	12.67										
		2-Wire Voice Grade Loop (SL 2) - Zone 2		2	UEP9D	UECS2	17.45										
		2-Wire Voice Grade Loop (SL 2) - Zone 3		3	UEP9D	UECS2	33.22										
	UNE Port Rate																
	ALL STATES																
		2-Wire Voice Grade Port (Centrex) Basic Local Area			UEP9D	UEPYA	1.15	21.29	15.49	2.85	2.67						
		2-Wire Voice Grade Port (Centrex 800 termination)Basic Local Area			UEP9D	UEPYB	1.15	21.29	15.49	2.85	2.67						
		2-Wire Voice Grade Port (Centrex / EBS-PSET)3Basic Local Area			UEP9D	UEPYC	1.15	21.29	15.49	2.85	2.67						
		2-Wire Voice Grade Port (Centrex / EBS-M5009)3Basic Local Area			UEP9D	UEPYD	1.15	21.29	15.49	2.85	2.67						
		2-Wire Voice Grade Port (Centrex / EBS-M5209))3 Basic Local Area			UEP9D	UEPYE	1.15	21.29	15.49	2.85	2.67						
		2-Wire Voice Grade Port (Centrex / EBS-M5112))3 Basic Local Area			UEP9D	UEPYF	1.15	21.29	15.49	2.85	2.67						
		2-Wire Voice Grade Port (Centrex / EBS-M5312))3Basic Local Area			UEP9D	UEPYG	1.15	21.29	15.49	2.85	2.67						
		2-Wire Voice Grade Port (Centrex / EBS-M5008))3 Basic Local Area			UEP9D	UEPYT	1.15	21.29	15.49	2.85	2.67						
		2-Wire Voice Grade Port (Centrex / EBS-M5208))3 Basic Local Area			UEP9D	UEPYU	1.15	21.29	15.49	2.85	2.67						

UNBUNDLED NETWORK ELEMENTS - Kentucky														Attachment: 2		Exhibit: A	
CATEGORY		RATE ELEMENTS	Interim	Zone	BCS	USOC	RATES ($)					Svc Order Submitted Elec per LSR	Svc Order Submitted Manually per LSR	Incremental Charge - Manual Svc Order vs. Electronic-1st	Incremental Charge - Manual Svc Order vs. Electronic-Add'l	Incremental Charge - Manual Svc Order vs. Electronic-Disc 1st	Incremental Charge - Manual Svc Order vs. Electronic-Disc Add'l
							Rec	Nonrecurring		Nonrecurring Disconnect		OSS Rates ($)					
								First	Add'l	First	Add'l	SOMEC	SOMAN	SOMAN	SOMAN	SOMAN	SOMAN
		2-Wire Voice Grade Port (Centrex / EBS-M5216))3 Basic Local Area			UEP9D	UEPYV	1.15	21.29	15.49	2.85	2.67						
		2-Wire Voice Grade Port (Centrex / EBS-M5316))3 Basic Local Area			UEP9D	UEPY3	1.15	21.29	15.49	2.85	2.67						
		2-Wire Voice Grade Port (Centrex with Caller ID) Basic Local Area			UEP9D	UEPYH	1.15	21.29	15.49	2.85	2.67						
		2-Wire Voice Grade Port (Centrex/Caller ID/Msg Wtg Lamp Indication))4 Basic Local Area			UEP9D	UEPYW	1.15	21.29	15.49	2.85	2.67						
		2-Wire Voice Grade Port (Centrex/Msg Wtg Lamp Indication))4 Basic Local Area			UEP9D	UEPYJ	1.15	21.29	15.49	2.85	2.67						
		2-Wire Voice Grade Port (Centrex from diff Serving Wire Center) 2,3-Basic Local Area			UEP9D	UEPYM	1.15	21.29	15.49	2.85	2.67						
		2-Wire Voice Grade Port (Centrex/differ SWC /EBS-PSET)2,3,4 Basic Local Area			UEP9D	UEPYO	1.15	21.29	15.49	2.85	2.67						
		2-Wire Voice Grade Port (Centrex/differ SWC /EBS-M5009)2,3,4 Basic Local Area			UEP9D	UEPYP	1.15	21.29	15.49	2.85	2.67						
		2-Wire Voice Grade Port (Centrex/differ SWC /EBS-5209)2,3,4 Basic Local Area			UEP9D	UEPYQ	1.15	21.29	15.49	2.85	2.67						
		2-Wire Voice Grade Port (Centrex/differ SWC /EBS-M5112)2,3,4 Basic Local Area			UEP9D	UEPYR	1.15	21.29	15.49	2.85	2.67						
		2-Wire Voice Grade Port (Centrex/differ SWC /EBS-M5312)2,3,4 Basic Local Area			UEP9D	UEPYS	1.15	21.29	15.49	2.85	2.67						
		2-Wire Voice Grade Port (Centrex/differ SWC /EBS-M5008)2,3,4 Basic Local Area			UEP9D	UEPY4	1.15	21.29	15.49	2.85	2.67						
		2-Wire Voice Grade Port (Centrex/differ SWC /EBS-M5208)2, 3 Basic Local Area			UEP9D	UEPY5	1.15	21.29	15.49	2.85	2.67						
		2-Wire Voice Grade Port (Centrex/differ SWC /EBS-M5216)2,3,4 Basic Local Area			UEP9D	UEPY6	1.15	21.29	15.49	2.85	2.67						
		2-Wire Voice Grade Port (Centrex/differ SWC /EBS-M5316)2,3,4 Basic Local Area			UEP9D	UEPY7	1.15	21.29	15.49	2.85	2.67						
		2-Wire Voice Grade Port, Diff Serving Wire Center - 800 Service Term 2,3			UEP9D	UEPYZ	1.15	21.29	15.49	2.85	2.67						
		2-Wire Voice Grade Port terminated in on Megalink or equivalent Basic Local Area			UEP9D	UEPY9	1.15	21.29	15.49	2.85	2.67						
		2-Wire Voice Grade Port Terminated on 800 Service Term Basic Local Area			UEP9D	UEPY2	1.15	21.29	15.49	2.85	2.67						
	AL, KY, LA, MS, SC, & TN Only																
		2-Wire Voice Grade Port (Centrex)			UEP9D	UEPQA	1.15	21.29	15.49	2.85	2.67						
		2-Wire Voice Grade Port (Centrex 800 termination)			UEP9D	UEPQB	1.15	21.29	15.49	2.85	2.67						
		2-Wire Voice Grade Port (Centrex / EBS-PSET)4			UEP9D	UEPQC	1.15	21.29	15.49	2.85	2.67						
		2-Wire Voice Grade Port (Centrex / EBS-M5009)4			UEP9D	UEPQD	1.15	21.29	15.49	2.85	2.67						
		2-Wire Voice Grade Port (Centrex / EBS-M5209)4			UEP9D	UEPQE	1.15	21.29	15.49	2.85	2.67						
		2-Wire Voice Grade Port (Centrex / EBS-M5112)4			UEP9D	UEPQF	1.15	21.29	15.49	2.85	2.67						
		2-Wire Voice Grade Port (Centrex / EBS-M5312)4			UEP9D	UEPQG	1.15	21.29	15.49	2.85	2.67						
		2-Wire Voice Grade Port (Centrex / EBS-M5008)4			UEP9D	UEPQT	1.15	21.29	15.49	2.85	2.67						
		2-Wire Voice Grade Port (Centrex / EBS-M5208)4			UEP9D	UEPQU	1.15	21.29	15.49	2.85	2.67						
		2-Wire Voice Grade Port (Centrex / EBS-M5216)4			UEP9D	UEPQV	1.15	21.29	15.49	2.85	2.67						
		2-Wire Voice Grade Port (Centrex / EBS-M5316)4			UEP9D	UEPQ3	1.15	21.29	15.49	2.85	2.67						
		2-Wire Voice Grade Port (Centrex with Caller ID)			UEP9D	UEPQH	1.15	21.29	15.49	2.85	2.67						
		2-Wire Voice Grade Port (Centrex/Caller ID/Msg Wtg Lamp Indication)4			UEP9D	UEPQW	1.15	21.29	15.49	2.85	2.67						
		2-Wire Voice Grade Port (Centrex/Msg Wtg Lamp Indication)4			UEP9D	UEPQJ	1.15	21.29	15.49	2.85	2.67						
		2-Wire Voice Grade Port (Centrex from diff Serving Wire Center) 2,3			UEP9D	UEPQM	1.15	21.29	15.49	2.85	2.67						
		2-Wire Voice Grade Port (Centrex/differ SWC /EBS-PSET)2,3,4			UEP9D	UEPQO	1.15	21.29	15.49	2.85	2.67						
		2-Wire Voice Grade Port (Centrex/differ SWC /EBS-M5009)2,3,4			UEP9D	UEPQP	1.15	21.29	15.49	2.85	2.67						

UNBUNDLED NETWORK ELEMENTS - Kentucky														Attachment: 2		Exhibit: A	
CATEGORY	RATE ELEMENTS	Interim	Zone	BCS	USOC	RATES ($)					Svc Order Submitted Elec per LSR	Svc Order Submitted Manually per LSR	Incremental Charge - Manual Svc Order vs. Electronic-1st	Incremental Charge - Manual Svc Order vs. Electronic-Add'l	Incremental Charge - Manual Svc Order vs. Electronic-Disc 1st	Incremental Charge - Manual Svc Order vs. Electronic-Disc Add'l
						Rec	Nonrecurring		Nonrecurring Disconnect		OSS Rates ($)					
							First	Add'l	First	Add'l	SOMEC	SOMAN	SOMAN	SOMAN	SOMAN	SOMAN
	2-Wire Voice Grade Port (Centrex/differ SWC /EBS-5209)2,3,4			UEP9D	UEPQQ	1.15	21.29	15.49	2.85	2.67						
	2-Wire Voice Grade Port (Centrex/differ SWC /EBS-M5112)2,3,4			UEP9D	UEPQR	1.15	21.29	15.49	2.85	2.67						
	2-Wire Voice Grade Port (Centrex/differ SWC /EBS-M5312)2,3,4			UEP9D	UEPQS	1.15	21.29	15.49	2.85	2.67						
	2-Wire Voice Grade Port (Centrex/differ SWC /EBS-M5008)2,3,4			UEP9D	UEPQ4	1.15	21.29	15.49	2.85	2.67						
	2-Wire Voice Grade Port (Centrex/differ SWC /EBS-M5208)2,3,4			UEP9D	UEPQ5	1.15	21.29	15.49	2.85	2.67						
	2-Wire Voice Grade Port (Centrex/differ SWC /EBS-M5216)2,3,4			UEP9D	UEPQ6	1.15	21.29	15.49	2.85	2.67						
	2-Wire Voice Grade Port (Centrex/differ SWC /EBS-M5316)2,3,4			UEP9D	UEPQ7	1.15	21.29	15.49	2.85	2.67						
	2-Wire Voice Grade Port, Diff Serving Wire Center - 800 Service Term 2,3			UEP9D	UEPQZ	1.15	21.29	15.49	2.85	2.67						
	2-Wire Voice Grade Port terminated in on Megalink or equivalent			UEP9D	UEPQ9	1.15	21.29	15.49	2.85	2.67						
	2-Wire Voice Grade Port Terminated on 800 Service Term			UEP9D	UEPQ2	1.15	21.29	15.49	2.85	2.67						
Local Switching																
	Centrex Intercom Funtionality, per port			UEP9D	URECS	0.8873										
Local Number Portability																
	Local Number Portability (1 per port)			UEP9D	LNPCC	0.35										
Features																
	All Standard Features Offered, per port			UEP9D	UEPVF	0.00										
	All Select Features Offered, per port			UEP9D	UEPVS	0.00	405.66									
	All Centrex Control Features Offered, per port			UEP9D	UEPVC	0.00										
NARS																
	Unbundled Network Access Register - Combination			UEP9D	UARCX	0.00	0.00	0.00	0.00	0.00						
	Unbundled Network Access Register - Inward			UEP9D	UAR1X	0.00	0.00	0.00	0.00	0.00						
	Unbundled Network Access Register - Outdial			UEP9D	UAROX	0.00	0.00	0.00	0.00	0.00						
Miscellaneous Terminations																
2-Wire Trunk Side																
	Trunk Side Terminations, each			UEP9D	CEND6	10.51	92.18	15.82	52.16	5.30						
4-Wire Digital (1.544 Megabits)																
	DS1 Circuit Terminations, each			UEP9D	M1HD1	74.77	164.86	77.74	60.69	3.86						
	DS0 Channels Activiated per Channel			UEP9D	M1HDO	0.00	15.09									
Interoffice Channel Mileage - 2-Wire																
	Interoffice Channel Facilities Termination			UEP9D	M1GBC	29.11										
	Interoffice Channel mileage, per mile or fraction of mile			UEP9D	M1GBM	0.01										
Feature Activations (DS0) Centrex Loops on Channelized DS1 Service																
D4 Channel Bank Feature Activations																
	Feature Activation on D-4 Channel Bank Centrex Loop Slot			UEP9D	1PQWS	0.62										
	Feature Activation on D-4 Channel Bank FX line Side Loop Slot			UEP9D	1PQW6	0.62										
	Feature Activation on D-4 Channel Bank FX Trunk Side Loop Slot			UEP9D	1PQW7	0.62										
	Feature Activation on D-4 Channel Bank Centrex Loop Slot - Different Wire Center			UEP9D	1PQWP	0.62										
	Feature Activation on D-4 Channel Bank Private Line Loop Slot			UEP9D	1PQWV	0.62										
	Feature Activation on D-4 Channel Bank Tjie Line/Trunk Loop Slot			UEP9D	1PQWQ	0.62										
	Feature Activation on D-4 Channel Bank WATS Loop Slot			UEP9D	1PQWA	0.62										
Non-Recurring Charges (NRC) Associated with UNE-P Centrex																
	NRC Conversion Currently Combined Switch-As-Is with allowed changes, per port			UEP9D	USAC2		0.102	0.102								
	Conversion of existing Centrex Common Block, each			UEP9D	USACN		18.95	8.32								
	New Centrex Standard Common Block			UEP9D	M1ACS	0.00	669.80	78.32	111.05	13.27						

UNBUNDLED NETWORK ELEMENTS - Kentucky														Attachment: 2		Exhibit: A	
CATEGORY	RATE ELEMENTS	Interim	Zone	BCS	USOC	RATES ($)					Svc Order Submitted Elec per LSR	Svc Order Submitted Manually per LSR	Incremental Charge - Manual Svc Order vs. Electronic-1st	Incremental Charge - Manual Svc Order vs. Electronic-Add'l	Incremental Charge - Manual Svc Order vs. Electronic-Disc 1st	Incremental Charge - Manual Svc Order vs. Electronic-Disc Add'l
						Rec	Nonrecurring		Nonrecurring Disconnect		OSS Rates ($)					
							First	Add'l	First	Add'l	SOMEC	SOMAN	SOMAN	SOMAN	SOMAN	SOMAN
	New Centrex Customized Common Block			UEP9D	M1ACC	0.00	669.80	78.32	111.05	13.27						
	NAR Establishment Charge, Per Occasion			UEP9D	URECA	0.00	72.75									
Additional Non-Recurring Charges (NRC)																
	Unbundled Miscellaneous Rate Element, Tag Loop at End Use Premise			UEP9D	URETL		8.33	0.83								
	Unbundled Miscellaneous Rate Element, Tag Design Loop at End Use Premise			UEP9D	URETN		11.21	1.10								
UNE-P CENTREX - EWSD (Valid in AL, FL, KY, LA, MS & TN)																
2-Wire VG Loop/2-Wire Voice Grade Port (Centrex) Combo																
UNE Port/Loop Combination Rates (Non-Design)																
	2-Wire VG Loop/2-Wire Voice Grade Port (Centrex) Port Combo - Non-Design		1	UEP9E		10.79										
	2-Wire VG Loop/2-Wire Voice Grade Port (Centrex)Port Combo - Non-Design		2	UEP9E		15.52										
	2-Wire VG Loop/2-Wire Voice Grade Port (Centrex)Port Combo - Non-Design		3	UEP9E		31.74										
UNE Port/Loop Combination Rates (Design)																
	2-Wire VG Loop/2-Wire Voice Grade Port (Centrex) Port Combo - Design		1	UEP9E		13.82										
	2-Wire VG Loop/2-Wire Voice Grade Port (Centrex)Port Combo - Design		2	UEP9E		18.60										
	2-Wire VG Loop/2-Wire Voice Grade Port (Centrex)Port Combo - Design		3	UEP9E		34.37										
UNE Loop Rate																
	2-Wire Voice Grade Loop (SL 1) - Zone 1		1	UEP9E	UECS1	9.64										
	2-Wire Voice Grade Loop (SL 1) - Zone 2		2	UEP9E	UECS1	14.37										
	2-Wire Voice Grade Loop (SL 1) - Zone 3		3	UEP9E	UECS1	30.59										
	2-Wire Voice Grade Loop (SL 2) - Zone 1		1	UEP9E	UECS2	12.67										
	2-Wire Voice Grade Loop (SL 2) - Zone 2		2	UEP9E	UECS2	17.45										
	2-Wire Voice Grade Loop (SL 2) - Zone 3		3	UEP9E	UECS2	33.22										
UNE Port Rate																
AL, FL, KY, LA, MS, & TN only																
	2-Wire Voice Grade Port (Centrex) Basic Local Area			UEP9E	UEPYA	1.15	21.29	15.49	2.85	2.67						
	2-Wire Voice Grade Port (Centrex 800 termination)Basic Local Area			UEP9E	UEPYB	1.15	21.29	15.49	2.85	2.67						
	2-Wire Voice Grade Port (Centrex with Caller ID)1Basic Local Area			UEP9E	UEPYH	1.15	21.29	15.49	2.85	2.67						
	2-Wire Voice Grade Port (Centrex from diff Serving Wire Center)2,3 Basic Local Area			UEP9E	UEPYM	1.15	21.29	15.49	2.85	2.67						
	2-Wire Voice Grade Port, Diff Serving Wire Center 2,3 - 800 Service Term - Basic Local Area			UEP9E	UEPYZ	1.15	21.29	15.49	2.85	2.67						
	2-Wire Voice Grade Port terminated in on Megalink or equivalent - Basic Local Area			UEP9E	UEPY9	1.15	21.29	15.49	2.85	2.67						
	2-Wire Voice Grade Port Terminated on 800 Service Term - Basic Local Area			UEP9E	UEPY2	1.15	21.29	15.49	2.85	2.67						
AL, KY, LA, MS, & TN Only																
	2-Wire Voice Grade Port (Centrex)			UEP9E	UEPQA	1.15	21.29	15.49	2.85	2.67						
	2-Wire Voice Grade Port (Centrex 800 termination)			UEP9E	UEPQB	1.15	21.29	15.49	2.85	2.67						
	2-Wire Voice Grade Port (Centrex with Caller ID)1			UEP9E	UEPQH	1.15	21.29	15.49	2.85	2.67						
	2-Wire Voice Grade Port (Centrex from diff Serving Wire Center)2,3			UEP9E	UEPQM	1.15	21.29	15.49	2.85	2.67						
	2-Wire Voice Grade Port, Diff Serving Wire Center 2,3 - 800 Service Term			UEP9E	UEPQZ	1.15	21.29	15.49	2.85	2.67						
	2-Wire Voice Grade Port terminated in on Megalink or equivalent			UEP9E	UEPQ9	1.15	21.29	15.49	2.85	2.67						
	2-Wire Voice Grade Port Terminated on 800 Service Term			UEP9E	UEPQ2	1.15	21.29	15.49	2.85	2.67						
Local Switching																
	Centrex Intercom Funtionality, per port			UEP9E	URECS	0.8873										
Local Number Portability																

UNBUNDLED NETWORK ELEMENTS - Kentucky														Attachment: 2		Exhibit: A	
CATEGORY		RATE ELEMENTS	Interim	Zone	BCS	USOC	RATES ($)					Svc Order Submitted Elec per LSR	Svc Order Submitted Manually per LSR	Incremental Charge - Manual Svc Order vs. Electronic-1st	Incremental Charge - Manual Svc Order vs. Electronic-Add'l	Incremental Charge - Manual Svc Order vs. Electronic-Disc 1st	Incremental Charge - Manual Svc Order vs. Electronic-Disc Add'l
							Rec	Nonrecurring		Nonrecurring Disconnect		OSS Rates ($)					
								First	Add'l	First	Add'l	SOMEC	SOMAN	SOMAN	SOMAN	SOMAN	SOMAN
		Local Number Portability (1 per port)			UEP9E	LNPCC	0.35										
	Features																
		All Standard Features Offered, per port			UEP9E	UEPVF	0.00										
		All Select Features Offered, per port			UEP9E	UEPVS	0.00	405.66									
		All Centrex Control Features Offered, per port			UEP9E	UEPVC	0.00										
	NARS																
		Unbundled Network Access Register - Combination			UEP9E	UARCX	0.00	0.00	0.00	0.00	0.00						
		Unbundled Network Access Register - Indial			UEP9E	UAR1X	0.00	0.00	0.00	0.00	0.00						
		Unbundled Network Access Register - Outdial			UEP9E	UAROX	0.00	0.00	0.00	0.00	0.00						
	Miscellaneous Terminations																
	2-Wire Trunk Side																
		Trunk Side Terminations, each			UEP9E	CEND6	10.51	92.18	15.82	52.16	5.30						
	4-Wire Digital (1.544 Megabits)																
		DS1 Circuit Terminations, each			UEP9E	M1HD1	74.77	164.86	77.74	60.69	3.86						
		DS0 Channel Activated Per Channel			UEP9E	M1HDO	0.00	15.09									
	Interoffice Channel Mileage - 2-Wire																
		Interoffice Channel Facilities Termination			UEP9E	M1GBC	29.11										
		Interoffice Channel mileage, per mile or fraction of mile			UEP9E	M1GBM	0.01										
	Feature Activations (DS0) Centrex Loops on Channelized DS1 Service																
	D4 Channel Bank Feature Activations																
		Feature Activation on D-4 Channel Bank Centrex Loop Slot			UEP9E	1PQWS	0.62										
		Feature Activation on D-4 Channel Bank FX line Side Loop Slot			UEP9E	1PQW6	0.62										
		Feature Activation on D-4 Channel Bank FX Trunk Side Loop Slot			UEP9E	1PQW7	0.62										
		Feature Activation on D-4 Channel Bank Centrex Loop Slot - Different Wire Center			UEP9E	1PQWP	0.62										
		Feature Activation on D-4 Channel Bank Private Line Loop Slot			UEP9E	1PQWV	0.62										
		Feature Activation on D-4 Channel Bank Tjie Line/Trunk Loop Slot			UEP9E	1PQWQ	0.62										
		Feature Activation on D-4 Channel Bank WATS Loop Slot			UEP9E	1PQWA	0.62										
	Non-Recurring Charges (NRC) Associated with UNE-P Centrex																
		NRC Conversion Currently Combined Switch-As-Is with allowed changes, per port			UEP9E	USAC2		0.102	0.102								
		Conversion of Existing Centrex Common Block, each			UEP9E	USACN		18.95	8.32								
		New Centrex Standard Common Block			UEP9E	M1ACS	0.00	669.80	78.32	111.05	13.27						
		New Centrex Customized Common Block			UEP9E	M1ACC	0.00	669.80	78.32	111.05	13.27						
		NAR Establishment Charge, Per Occasion			UEP9E	URECA	0.00	72.75									
	Additional Non-Recurring Charges (NRC)																
		Unbundled Miscellaneous Rate Element, Tag Loop at End Use Premise			UEP9E	URETL		8.33	0.83								
		Unbundled Miscellaneous Rate Element, Tag Design Loop at End Use Premise			UEP9E	URETN		11.21	1.10								
	UNE-P CENTREX - DCO - Valid in AL, KY, LA, MS, & TN)																
	2-Wire VG Loop/2-Wire Voice Grade Port (Centrex) Combo																
	UNE Port/Loop Combination Rates (Non-Design)																
		2-Wire VG Loop/2-Wire Voice Grade Port (Centrex) Port Combo - Non-Design		1	UEP93		10.79										
		2-Wire VG Loop/2-Wire Voice Grade Port (Centrex)Port Combo - Non-Design		2	UEP93		15.52										
		2-Wire VG Loop/2-Wire Voice Grade Port (Centrex)Port Combo - Non-Design		3	UEP93		31.74										
	UNE Port/Loop Combination Rates (Design)																
		2-Wire VG Loop/2-Wire Voice Grade Port (Centrex) Port Combo - Design		1	UEP93		13.82										
		2-Wire VG Loop/2-Wire Voice Grade Port (Centrex)Port Combo - Design		2	UEP93		18.60										

UNBUNDLED NETWORK ELEMENTS - Kentucky														Attachment: 2		Exhibit: A	
CATEGORY		RATE ELEMENTS	Interim	Zone	BCS	USOC	RATES ($)					Svc Order Submitted Elec per LSR	Svc Order Submitted Manually per LSR	Incremental Charge - Manual Svc Order vs. Electronic-1st	Incremental Charge - Manual Svc Order vs. Electronic-Add'l	Incremental Charge - Manual Svc Order vs. Electronic-Disc 1st	Incremental Charge - Manual Svc Order vs. Electronic-Disc Add'l
							Rec	Nonrecurring		Nonrecurring Disconnect		OSS Rates ($)					
								First	Add'l	First	Add'l	SOMEC	SOMAN	SOMAN	SOMAN	SOMAN	SOMAN
		2-Wire VG Loop/2-Wire Voice Grade Port (Centrex)Port Combo - Design		3	UEP93		34.37										
	UNE Loop Rate																
		2-Wire Voice Grade Loop (SL 1) - Zone 1		1	UEP93	UECS1	9.64										
		2-Wire Voice Grade Loop (SL 1) - Zone 2		2	UEP93	UECS1	14.37										
		2-Wire Voice Grade Loop (SL 1) - Zone 3		3	UEP93	UECS1	30.59										
		2-Wire Voice Grade Loop (SL 2) - Zone 1		1	UEP93	UECS2	12.67										
		2-Wire Voice Grade Loop (SL 2) - Zone 2		2	UEP93	UECS2	17.45										
		2-Wire Voice Grade Loop (SL 2) - Zone 3		3	UEP93	UECS2	33.22										
	UNE Port Rate																
	AL, KY, LA, MS, & TN only																
		2-Wire Voice Grade Port (Centrex) Basic Local Area			UEP93	UEPYA	1.15	21.29	15.49	2.85	2.67						
		2-Wire Voice Grade Port (Centrex 800 termination)Basic Local Area			UEP93	UEPYB	1.15	21.29	15.49	2.85	2.67						
		2-Wire Voice Grade Port (Centrex with Caller ID)1Basic Local Area			UEP93	UEPYH	1.15	21.29	15.49	2.85	2.67						
		2-Wire Voice Grade Port (Centrex from diff Serving Wire Center)2,3 Basic Local Area			UEP93	UEPYM	1.15	21.29	15.49	2.85	2.67						
		2-Wire Voice Grade Port, Diff Serving Wire Center - 2,3 - 800 Service Term - Basic Local Area			UEP93	UEPYZ	1.15	21.29	15.49	2.85	2.67						
		2-Wire Voice Grade Port terminated in on Megalink or equivalent - Basic Local Area			UEP93	UEPY9	1.15	21.29	15.49	2.85	2.67						
		2-Wire Voice Grade Port Terminated on 800 Service Term - Basic Local Area			UEP93	UEPY2	1.15	21.29	15.49	2.85	2.67						
		2-Wire Voice Grade Port (Centrex)			UEP93	UEPQA	1.15	21.29	15.49	2.85	2.67						
		2-Wire Voice Grade Port (Centrex 800 termination)			UEP93	UEPQB	1.15	21.29	15.49	2.85	2.67						
		2-Wire Voice Grade Port (Centrex with Caller ID)1			UEP93	UEPQH	1.15	21.29	15.49	2.85	2.67						
		2-Wire Voice Grade Port (Centrex from diff Serving Wire Center)2,3			UEP93	UEPQM	1.15	21.29	15.49	2.85	2.67						
		2-Wire Voice Grade Port, Diff Serving Wire Center - 2,3 -800 Service Term			UEP93	UEPQZ	1.15	21.29	15.49	2.85	2.67						
		2-Wire Voice Grade Port terminated in on Megalink or equivalent			UEP93	UEPQ9	1.15	21.29	15.49	2.85	2.67						
		2-Wire Voice Grade Port Terminated on 800 Service Term			UEP93	UEPQ2	1.15	21.29	15.49	2.85	2.67						
	Local Switching																
		Centrex Intercom Funtionality, per port			UEP93	URECS	0.8873										
	Local Number Portability																
		Local Number Portability (1 per port)			UEP93	LNPCC	0.35										
	Features																
		All Standard Features Offered, per port			UEP93	UEPVF	0.00										
		All Centrex Control Features Offered, per port			UEP93	UEPVC	0.00										
	NARS																
		Unbundled Network Access Register - Combination			UEP93	UARCX	0.00	0.00	0.00	0.00	0.00						
		Unbundled Network Access Register - Indial			UEP93	UAR1X	0.00	0.00	0.00	0.00	0.00						
		Unbundled Network Access Register - Outdial			UEP93	UAROX	0.00	0.00	0.00	0.00	0.00						
	Miscellaneous Terminations																
	2-Wire Trunk Side																
		Trunk Side Terminations, each			UEP93	CEND6	10.51	92.18	15.82	52.16	5.30						
	4-Wire Digital (1.544 Megabits)																
		DS1 Circuit Terminations, each			UEP93	M1HD1	74.77	164.86	77.74	60.69	3.86						
		DS0 Channels Activated, Per Channel			UEP93	M1HDO	0.00	15.09									
	Interoffice Channel Mileage - 2-Wire																
		Interoffice Channel Facilities Termination			UEP93	M1GBC	29.11										
		Interoffice Channel mileage, per mile or fraction of mile			UEP93	M1GBM	0.01										
	Feature Activations (DS0) Centrex Loops on Channelized DS1 Service																
	D4 Channel Bank Feature Activations																
		Feature Activation on D-4 Channel Bank Centrex Loop Slot			UEP93	1PQWS	0.62										
		Feature Activation on D-4 Channel Bank FX Line Side Loop Slot			UEP93	1PQW6	0.62										

UNBUNDLED NETWORK ELEMENTS - Kentucky														Attachment: 2		Exhibit: A	
CATEGORY	RATE ELEMENTS	Interim	Zone	BCS	USOC	RATES ($)					Svc Order Submitted Elec per LSR	Svc Order Submitted Manually per LSR	Incremental Charge - Manual Svc Order vs. Electronic-1st	Incremental Charge - Manual Svc Order vs. Electronic-Add'l	Incremental Charge - Manual Svc Order vs. Electronic-Disc 1st	Incremental Charge - Manual Svc Order vs. Electronic-Disc Add'l
						Rec	Nonrecurring		Nonrecurring Disconnect		OSS Rates ($)					
							First	Add'l	First	Add'l	SOMEC	SOMAN	SOMAN	SOMAN	SOMAN	SOMAN
	Feature Activation on D-4 Channel Bank FX Trunk Side Loop Slot			UEP93	1PQW7	0.62										
	Feature Activation on D-4 Channel Bank Centrex Loop Slot - Different Wire Center			UEP93	1PQWP	0.62										
	Feature Activation on D-4 Channel Bank Private Line Loop Slot			UEP93	1PQWV	0.62										
	Feature Activation on D-4 Channel Bank Tie Line/Trunk Loop Slot			UEP93	1PQWQ	0.62										
	Feature Activation on D-4 Channel Bank WATS Loop Slot			UEP93	1PQWA	0.62										
Non-Recurring Charges (NRC) Associated with UNE-P Centrex																
	NRC Conversion Currently Combined Switch-As-Is with allowed changes, per port			UEP93	USAC2		0.102	0.102								
	Conversion of Existing Centrex Common Block, each			UEP93	USACN		18.95	8.32								
	New Centrex Standard Common Block			UEP93	M1ACS	0.00	669.80	78.32	111.05	13.27						
	New Centrex Customized Common Block			UEP93	M1ACC	0.00	669.80	78.32	111.05	13.27						
	NAR Establishment Charge, Per Occasion			UEP93	URECA	0.00	72.75									
Additional Non-Recurring Charges (NRC)																
	Unbundled Miscellaneous Rate Element, Tag Loop at End Use Premise			UEP93	URETL		8.33	0.83								
	Unbundled Miscellaneous Rate Element, Tag Design Loop at End Use Premise			UEP93	URETN		11.21	1.10								
Note 1 - Required Port for Centrex Control in 1AESS, 5ESS & EWSD																
Note 2 - Requres Interoffice Channel Mileage																
Note 3 - Installation is combination of Installation charge for SL2 Loop and Port																
Note 4 - Requires Specific Customer Premises Equipment																
Note: Rates displaying an "R" in Interim column are interim and subject to rate true-up as set forth in General Terms and Conditions.																

UNBUNDLED NETWORK ELEMENTS - Louisiana														Attachment: 2		Exhibit: A	
CATEGORY		RATE ELEMENTS	Interim	Zone	BCS	USOC	RATES ($)					Svc Order Submitted Elec per LSR	Svc Order Submitted Manually per LSR	Incremental Charge - Manual Svc Order vs. Electronic-1st	Incremental Charge - Manual Svc Order vs. Electronic-Add'l	Incremental Charge - Manual Svc Order vs. Electronic-Disc 1st	Incremental Charge - Manual Svc Order vs. Electronic-Disc Add'l
							Rec	Nonrecurring		Nonrecurring Disconnect		OSS Rates ($)					
								First	Add'l	First	Add'l	SOMEC	SOMAN	SOMAN	SOMAN	SOMAN	SOMAN
	The "Zone" shown in the sections for stand-alone loops or loops as part of a combination refers to Geographically Deaveraged UNE Zones. To view Geographically Deaveraged UNE Zone Designations by Central Office, refer to internet Website: http://www.interconnection.bellsouth.com/become_a_clec/html/interconnection.htm																
OPERATIONAL SUPPORT SYSTEMS (OSS) - "REGIONAL RATES"																	
	NOTE: (1) CLEC should contact its contract negotiator if it prefers the "state specific" OSS charges as ordered by the State Commissions. The OSS charges currently contained in this rate exhibit are the BellSouth "regional" service ordering charges. CLEC may elect either the state specific Commission ordered rates for the service ordering charges, or CLEC may elect the regional service ordering charge, however, CLEC can not obtain a mixture of the two regardless if CLEC has a interconnection contract established in each of the 9 states.																
	NOTE: (2) Any element that can be ordered electronically will be billed according to the SOMEC rate listed in this category. Please refer to BellSouth's Local Ordering Handbook (LOH) to determine if a product can be ordered electronically. For those elements that cannot be ordered electronically at present per the LOH, the listed SOMEC rate in this category reflects the charge that would be billed to a CLEC once electronic ordering capabilities come on-line for that element. Otherwise, the manual ordering charge, SOMAN, will be applied to a CLECs bill when it submits an LSR to BellSouth.																
		OSS - Electronic Service Order Charge, Per Local Service Request (LSR) - UNE Only				SOMEC		3.50	0.00	3.50	0.00						
		OSS - Manual Service Order Charge, Per Local Service Request (LSR) - UNE Only				SOMAN		15.20	0.00	15.20	0.00						
UNE SERVICE DATE ADVANCEMENT CHARGE																	
	NOTE: The Expedite charge will be maintained commensurate with BellSouth's FCC No.1 Tariff, Section 5 as applicable.																
		UNE Expedite Charge per Circuit or Line Assignable USOC, per Day			UAL, UEANL, UCL, UEF, UDF, UEQ, UDL, UENTW, UDN, UEA, UHL, ULC, USL, U1T12, U1T48, U1TD1, U1TD3, U1TDX, U1TO3, U1TS1, U1TVX, UC1BC, UC1BL, UC1CC, UC1CL, UC1DC, UC1DL, UC1EC, UC1EL, UC1FC, UC1FL, UC1GC, UC1GL, UC1HC, UC1HL, UDL12, UDL48, UDLO3, UDLSX, UE3, ULD12, ULD48, ULDD1, ULDD3, ULDDX, ULDO3, ULDS1, ULDVX, UNC1X, UNC3X, UNCDX, UNCNX, UNCSX, UNCVX, UNLD1, UNLD3, UXTD1, UXTD3, UXTS1, U1TUC, U1TUD, U1TUB, U1TUA	SDASP		200.00									
UNBUNDLED EXCHANGE ACCESS LOOP																	
	2-WIRE ANALOG VOICE GRADE LOOP																
		2-Wire Analog Voice Grade Loop - Service Level 1- Zone 1		1	UEANL	UEAL2	12.90	36.54	16.87								
		2-Wire Analog Voice Grade Loop - Service Level 1- Zone 2		2	UEANL	UEAL2	23.33	36.54	16.87								
		2-Wire Analog Voice Grade Loop - Service Level 1- Zone 3		3	UEANL	UEAL2	48.43	36.54	16.87								
		2-Wire Analog Voice Grade Loop - Service Level 1- Zone 1		1	UEANL	UEASL	12.90	36.54	16.87								
		2-Wire Analog Voice Grade Loop - Service Level 1- Zone 2		2	UEANL	UEASL	23.33	36.54	16.87								
		2-Wire Analog Voice Grade Loop - Service Level 1- Zone 3		3	UEANL	UEASL	48.43	36.54	16.87								
		Unbundled Miscellaneous Rate Element, Tag Loop at End User Premise			UEANL	URETL		8.33	0.83								
		Loop Testing - Basic 1st Half Hour			UEANL	URET1		33.17	33.17								
		Loop Testing - Basic Additional Half Hour			UEANL	URETA		19.28	19.28								

UNBUNDLED NETWORK ELEMENTS - Louisiana														Attachment: 2		Exhibit: A	
CATEGORY		RATE ELEMENTS	Interim	Zone	BCS	USOC	RATES ($)					Svc Order Submitted Elec per LSR	Svc Order Submitted Manually per LSR	Incremental Charge - Manual Svc Order vs. Electronic-1st	Incremental Charge - Manual Svc Order vs. Electronic-Add'l	Incremental Charge - Manual Svc Order vs. Electronic-Disc 1st	Incremental Charge - Manual Svc Order vs. Electronic-Disc Add'l
							Rec	Nonrecurring		Nonrecurring Disconnect		OSS Rates ($)					
								First	Add'l	First	Add'l	SOMEC	SOMAN	SOMAN	SOMAN	SOMAN	SOMAN
		CLEC to CLEC Conversion Charge Without Outside Dispatch (UVL-SL1)			UEANL	UREWO		15.75	8.93								
		Unbundled Voice Loop, Non-Design Voice Loop, billing for BST providing make-up (Engineering Information - E.I.)			UEANL	UEANM		13.04	13.04								
		Manual Order Coordination for UVL-SL1s (per loop)			UEANL	UEAMC		7.92	7.92								
		Order Coordination for Specified Conversion Time for UVL-SL1 (per LSR)			UEANL	OCOSL		17.56	17.56								
	2-WIRE Unbundled COPPER LOOP																
		2-Wire Unbundled Copper Loop - Non-Designed Zone 1	I	1	UEQ	UEQ2X	12.40	35.27	15.60								
		2 Wire Unbundled Copper Loop - Non-Designed - Zone 2	I	2	UEQ	UEQ2X	14.32	35.27	15.60								
		2 Wire Unbundled Copper Loop - Non-Designed - Zone 3	I	3	UEQ	UEQ2X	16.87	35.27	15.60								
		Unbundled Miscellaneous Rate Element, Tag Loop at End User Premise			UEQ	URETL		8.33	0.83								
		Manual Order Coordination 2 Wire Unbundled Copper Loop - Non-Designed (per loop)			UEQ	USBMC		7.92	7.92								
		Unbundled Copper Loop, Non-Design Copper Loop, billing for BST providing make-up (Engineering Information - E.I.)			UEQ	UEQMU		13.04	13.04								
		Loop Testing - Basic 1st Half Hour			UEQ	URET1		33.17	33.17								
		Loop Testing - Basic Additional Half Hour			UEQ	URETA		19.28	19.28								
		CLEC to CLEC Conversion Charge Without Outside Dispatch (UCL-ND)			UEQ	UREWO		14.25	7.42								
UNBUNDLED EXCHANGE ACCESS LOOP																	
	2-WIRE ANALOG VOICE GRADE LOOP																
		2 Wire Analog Voice Grade Loop-Service Level 1-Line Splitting-Zone 1		1	UEPSR UEPSB	UEALS	12.90	36.54	16.87	0.00	0.00						
		2 Wire Analog Voice Grade Loop-Service Level 1-Line Splitting-Zone 1		1	UEPSR UEPSB	UEABS	12.90	36.54	16.87	0.00	0.00						
		2 Wire Analog Voice Grade Loop- Service Level 1-Line Splitting-Zone 2		2	UEPSR UEPSB	UEALS	23.33	36.54	16.87	0.00	0.00						
		2 Wire Analog Voice Grade Loop- Service Level 1-Line Splitting-Zone 2		2	UEPSR UEPSB	UEABS	23.33	36.54	16.87	0.00	0.00						
		2 Wire Analog Voice Grade Loop-Service Level 1-Line Splitting-Zone 3		3	UEPSR UEPSB	UEALS	48.43	36.54	16.87	0.00	0.00						
		2 Wire Analog Voice Grade Loop-Service Level 1-Line Splitting-Zone 3		3	UEPSR UEPSB	UEABS	48.43	36.54	16.87	0.00	0.00						
UNBUNDLED EXCHANGE ACCESS LOOP																	
	2-WIRE ANALOG VOICE GRADE LOOP																
		2-Wire Analog Voice Grade Loop - Service Level 2 w/Loop or Ground Start Signaling - Zone 1		1	UEA	UEAL2	14.93	102.10	65.72								
		2-Wire Analog Voice Grade Loop - Service Level 2 w/Loop or Ground Start Signaling - Zone 2		2	UEA	UEAL2	25.35	102.10	65.72								
		2-Wire Analog Voice Grade Loop - Service Level 2 w/Loop or Ground Start Signaling - Zone 3		3	UEA	UEAL2	50.46	102.10	65.72								
		Order Coordination for Specified Conversion Time (per LSR)			UEA	OCOSL		17.56									
		2-Wire Analog Voice Grade Loop - Service Level 2 w/Reverse Battery Signaling - Zone 1		1	UEA	UEAR2	14.93	102.10	65.72								
		2-Wire Analog Voice Grade Loop - Service Level 2 w/Reverse Battery Signaling - Zone 2		2	UEA	UEAR2	25.35	102.10	65.72								
		2-Wire Analog Voice Grade Loop - Service Level 2 w/Reverse Battery Signaling - Zone 3		3	UEA	UEAR2	50.46	102.10	65.72								
		Order Coordination for Specified Conversion Time (per LSR)			UEA	OCOSL		17.56									
		CLEC to CLEC Conversion Charge without outside dispatch			UEA	UREWO		87.59	36.30								
		Loop Tagging - Service Level 2 (SL2)			UEA	URETL		11.20	1.10								
	4-WIRE ANALOG VOICE GRADE LOOP																
		4-Wire Analog Voice Grade Loop - Zone 1		1	UEA	UEAL4	30.81	127.40	91.02								
		4-Wire Analog Voice Grade Loop - Zone 2		2	UEA	UEAL4	38.32	127.40	91.02								
		4-Wire Analog Voice Grade Loop - Zone 3		3	UEA	UEAL4	60.39	127.40	91.02								
		Order Coordination for Specified Conversion Time (per LSR)			UEA	OCOSL		17.56									
		CLEC to CLEC Conversion Charge without outside dispatch			UEA	UREWO		87.59	36.30								

UNBUNDLED NETWORK ELEMENTS - Louisiana														Attachment: 2		Exhibit: A	
CATEGORY		RATE ELEMENTS	Interim	Zone	BCS	USOC	RATES ($)					Svc Order Submitted Elec per LSR	Svc Order Submitted Manually per LSR	Incremental Charge - Manual Svc Order vs. Electronic-1st	Incremental Charge - Manual Svc Order vs. Electronic-Add'l	Incremental Charge - Manual Svc Order vs. Electronic-Disc 1st	Incremental Charge - Manual Svc Order vs. Electronic-Disc Add'l
							Rec	Nonrecurring		Nonrecurring Disconnect		OSS Rates ($)					
								First	Add'l	First	Add'l	SOMEC	SOMAN	SOMAN	SOMAN	SOMAN	SOMAN
	2-WIRE ISDN DIGITAL GRADE LOOP																
		2-Wire ISDN Digital Grade Loop - Zone 1		1	UDN	U1L2X	22.09	113.34	76.96								
		2-Wire ISDN Digital Grade Loop - Zone 2		2	UDN	U1L2X	35.28	113.34	76.96								
		2-Wire ISDN Digital Grade Loop - Zone 3		3	UDN	U1L2X	65.18	113.34	76.96								
		Order Coordination For Specified Conversion Time (per LSR)			UDN	OCOSL		17.56									
		CLEC to CLEC Conversion Charge without outside dispatch			UDN	UREWO		91.49	44.09								
	2-WIRE ASYMMETRICAL DIGITAL SUBSCRIBER LINE (ADSL) COMPATIBLE LOOP																
		2 Wire Unbundled ADSL Loop including manual service inquiry & facility reservation - Zone 1		1	UAL	UAL2X	12.29	117.08	68.36								
		2 Wire Unbundled ADSL Loop including manual service inquiry & facility reservation - Zone 2		2	UAL	UAL2X	14.09	117.08	68.36								
		2 Wire Unbundled ADSL Loop including manual service inquiry & facility reservation - Zone 3		3	UAL	UAL2X	15.75	117.08	68.36								
		Order Coordination for Specified Conversion Time (per LSR)			UAL	OCOSL		17.56									
		2 Wire Unbundled ADSL Loop without manual service inquiry & facility reservaton - Zone 1		1	UAL	UAL2W	12.29	92.83	56.02								
		2 Wire Unbundled ADSL Loop without manual service inquiry & facility reservaton - Zone 2		2	UAL	UAL2W	14.09	92.83	56.02								
		2 Wire Unbundled ADSL Loop without manual service inquiry & facility reservaton - Zone 3		3	UAL	UAL2W	15.75	92.83	56.02								
		Order Coordination for Specified Conversion Time (per LSR)			UAL	OCOSL		17.56									
		CLEC to CLEC Conversion Charge without outside dispatch			UAL	UREWO		86.07	40.34								
	2-WIRE HIGH BIT RATE DIGITAL SUBSCRIBER LINE (HDSL) COMPATIBLE LOOP																
		2 Wire Unbundled HDSL Loop including manual service inquiry & facility reservation - Zone 1		1	UHL	UHL2X	9.79	125.50	76.77								
		2 Wire Unbundled HDSL Loop including manual service inquiry & facility reservation - Zone 2		2	UHL	UHL2X	11.52	125.50	76.77								
		2 Wire Unbundled HDSL Loop including manual service inquiry & facility reservation - Zone 3		3	UHL	UHL2X	12.74	125.50	76.77								
		Order Coordination for Specified Conversion Time (per LSR)			UHL	OCOSL		17.56									
		2 Wire Unbundled HDSL Loop without manual service inquiry and facility reservation - Zone 1		1	UHL	UHL2W	9.79	101.24	64.43								
		2 Wire Unbundled HDSL Loop without manual service inquiry and facility reservation - Zone 2		2	UHL	UHL2W	11.52	101.24	64.43								
		2 Wire Unbundled HDSL Loop without manual service inquiry and facility reservation - Zone 3		3	UHL	UHL2W	12.74	101.24	64.43								
		Order Coordination for Specified Conversion Time (per LSR)			UHL	OCOSL		17.56									
		CLEC to CLEC Conversion Charge without outside dispatch			UHL	UREWO		86.00	40.34								
	4-WIRE HIGH BIT RATE DIGITAL SUBSCRIBER LINE (HDSL) COMPATIBLE LOOP																
		4 Wire Unbundled HDSL Loop including manual service inquiry and facility reservation - Zone 1		1	UHL	UHL4X	16.24	153.26	104.54								
		4-Wire Unbundled HDSL Loop including manual service inquiry and facility reservation - Zone 2		2	UHL	UHL4X	16.65	153.26	104.54								
		4-Wire Unbundled HDSL Loop including manual service inquiry and facility reservation - Zone 3		3	UHL	UHL4X	17.34	153.26	104.54								
		Order Coordination for Specified Conversion Time (per LSR)			UHL	OCOSL		17.56									
		4-Wire Unbundled HDSL Loop without manual service inquiry and facility reservation - Zone 1		1	UHL	UHL4W	16.24	129.00	92.20								
		4-Wire Unbundled HDSL Loop without manual service inquiry and facility reservation - Zone 2		2	UHL	UHL4W	16.65	129.00	92.20								
		4-Wire Unbundled HDSL Loop without manual service inquiry and facility reservation - Zone 3		3	UHL	UHL4W	17.34	129.00	92.20								
		Order Coordination for Specified Conversion Time (per LSR)			UHL	OCOSL		17.56									
		CLEC to CLEC Conversion Charge without outside dispatch			UHL	UREWO		86.00	40.34								
	4-WIRE DS1 DIGITAL LOOP																
		4-Wire DS1 Digital Loop - Zone 1		1	USL	USLXX	85.70	245.16	152.98								
		4-Wire DS1 Digital Loop - Zone 2		2	USL	USLXX	194.96	245.16	152.98								
		4-Wire DS1 Digital Loop - Zone 3		3	USL	USLXX	491.94	245.16	152.98								
		Order Coordination for Specified Conversion Time (per LSR)			USL	OCOSL		17.56									

UNBUNDLED NETWORK ELEMENTS - Louisiana														Attachment: 2		Exhibit: A	
CATEGORY		RATE ELEMENTS	Interim	Zone	BCS	USOC	RATES ($)					Svc Order Submitted Elec per LSR	Svc Order Submitted Manually per LSR	Incremental Charge - Manual Svc Order vs. Electronic-1st	Incremental Charge - Manual Svc Order vs. Electronic-Add'l	Incremental Charge - Manual Svc Order vs. Electronic-Disc 1st	Incremental Charge - Manual Svc Order vs. Electronic-Disc Add'l
							Rec	Nonrecurring		Nonrecurring Disconnect		OSS Rates ($)					
								First	Add'l	First	Add'l	SOMEC	SOMAN	SOMAN	SOMAN	SOMAN	SOMAN
		CLEC to CLEC Conversion Charge without outside dispatch			USL	UREWO		100.93	42.98								
	4-WIRE 19.2, 56 OR 64 KBPS DIGITAL GRADE LOOP																
		4 Wire Unbundled Digital 19.2 Kbps		1	UDL	UDL19	30.99	121.86	85.48								
		4 Wire Unbundled Digital 19.2 Kbps		2	UDL	UDL19	36.78	121.86	85.48								
		4 Wire Unbundled Digital 19.2 Kbps		3	UDL	UDL19	38.92	121.86	85.48								
		4 Wire Unbundled Digital Loop 56 Kbps - Zone 1		1	UDL	UDL56	30.99	121.86	85.48								
		4 Wire Unbundled Digital Loop 56 Kbps - Zone 2		2	UDL	UDL56	36.78	121.86	85.48								
		4 Wire Unbundled Digital Loop 56 Kbps - Zone 3		3	UDL	UDL56	38.92	121.86	85.48								
		Order Coordination for Specified Conversion Time (per LSR)			UDL	OCOSL		17.56									
		4 Wire Unbundled Digital Loop 64 Kbps - Zone 1		1	UDL	UDL64	30.99	121.86	85.48								
		4 Wire Unbundled Digital Loop 64 Kbps - Zone 2		2	UDL	UDL64	36.78	121.86	85.48								
		4 Wire Unbundled Digital Loop 64 Kbps - Zone 3		3	UDL	UDL64	38.92	121.86	85.48								
		Order Coordination for Specified Conversion Time (per LSR)			UDL	OCOSL		17.56									
		CLEC to CLEC Conversion Charge without outside dispatch			UDL	UREWO		101.97	49.67								
	2-WIRE Unbundled COPPER LOOP																
		2-Wire Unbundled Copper Loop-Designed including manual service inquiry & facility reservation - Zone 1		1	UCL	UCLPB	12.29	116.18	67.46								
		2-Wire Unbundled Copper Loop-Designed including manual service inquiry & facility reservation - Zone 2		2	UCL	UCLPB	14.09	116.18	67.46								
		2 Wire Unbundled Copper Loop-Designed including manual service inquiry & facility reservation - Zone 3		3	UCL	UCLPB	15.75	116.18	67.46								
		Order Coordination for Unbundled Copper Loops (per loop)			UCL	UCLMC		7.92	7.92								
		2-Wire Unbundled Copper Loop-Designed without manual service inquiry and facility reservation - Zone 1		1	UCL	UCLPW	12.29	91.92	55.12								
		2-Wire Unbundled Copper Loop-Designed without manual service inquiry and facility reservation - Zone 2		2	UCL	UCLPW	14.09	91.92	55.12								
		2-Wire Unbundled Copper Loop-Designed without manual service inquiry and facility reservation - Zone 3		3	UCL	UCLPW	15.75	91.92	55.12								
		Order Coordination for Unbundled Copper Loops (per loop)			UCL	UCLMC		7.92	7.92								
		CLEC to CLEC Conversion Charge without outside dispatch (UCL-Des)			UCL	UREWO		91.92	42.47								
	4-WIRE COPPER LOOP																
		4-Wire Copper Loop-Designed including manual service inquiry and facility reservation - Zone 1		1	UCL	UCL4S	22.27	139.69	90.96								
		4-Wire Copper Loop-Designed including manual service inquiry and facility reservation - Zone 2		2	UCL	UCL4S	18.95	139.69	90.96								
		4-Wire Copper Loop-Designed including manual service inquiry and facility reservation - Zone 3		3	UCL	UCL4S	10.99	139.69	90.96								
		Order Coordination for Unbundled Copper Loops (per loop)			UCL	UCLMC		7.92	7.92								
		4-Wire Copper Loop-Designed without manual service inquiry and facility reservation - Zone 1		1	UCL	UCL4W	22.27	115.43	78.63								
		4-Wire Copper Loop-Designed without manual service inquiry and facility reservation - Zone 2		2	UCL	UCL4W	18.95	115.43	78.63								
		4-Wire Copper Loop-Designed without manual service inquiry and facility reservation - Zone 3		3	UCL	UCL4W	10.99	115.43	78.63								
		Order Coordination for Unbundled Copper Loops (per loop)			UCL	UCLMC		7.92	7.92								
		CLEC to CLEC Conversion Charge without outside dispatch (UCL-Des)			UCL	UREWO		91.92	42.47								
LOOP MODIFICATION																	
		Unbundled Loop Modification, Removal of Load Coils - 2 Wire pair less than or equal to 18k ft, per Unbundled Loop			UAL, UHL, UCL, UEQ, ULS, UEA, UEANL, UEPSR, UEPSB	ULM2L		0.00	0.00								
		Unbundled Loop Modification Removal of Load Coils - 4 Wire less than or equal to 18K ft, per Unbundled Loop			UHL, UCL, UEA	ULM4L		0.00	0.00								
		Unbundled Loop Modification Removal of Bridged Tap Removal, per unbundled loop			UAL, UHL, UCL, UEQ, ULS, UEA, UEANL, UEPSR, UEPSB	ULMBT		12.15	12.15								

UNBUNDLED NETWORK ELEMENTS - Louisiana														Attachment: 2		Exhibit: A	
CATEGORY		RATE ELEMENTS	Interim	Zone	BCS	USOC	RATES ($)					Svc Order Submitted Elec per LSR	Svc Order Submitted Manually per LSR	Incremental Charge - Manual Svc Order vs. Electronic-1st	Incremental Charge - Manual Svc Order vs. Electronic-Add'l	Incremental Charge - Manual Svc Order vs. Electronic-Disc 1st	Incremental Charge - Manual Svc Order vs. Electronic-Disc Add'l
							Rec	Nonrecurring		Nonrecurring Disconnect		OSS Rates ($)					
								First	Add'l	First	Add'l	SOMEC	SOMAN	SOMAN	SOMAN	SOMAN	SOMAN
SUB-LOOPS																	
	Sub-Loop Distribution																
		Sub-Loop - Per Cross Box Location - CLEC Feeder Facility Set-Up	I		UEANL	USBSA		144.09	144.09								
		Sub-Loop - Per Cross Box Location - Per 25 Pair Panel Set-Up	I		UEANL	USBSB		10.99	10.99								
		Sub-Loop - Per Building Equipment Room - CLEC Feeder Facility Set-Up	I		UEANL	USBSC		86.16	86.16								
		Sub-Loop - Per Building Equipment Room - Per 25 Pair Panel Set-Up	I		UEANL	USBSD		27.13	27.13								
		Sub-Loop Distribution Per 2-Wire Analog Voice Grade Loop - Zone 1	I	1	UEANL	USBN2	7.57	63.89	30.06								
		Sub-Loop Distribution Per 2-Wire Analog Voice Grade Loop - Zone 2	I	2	UEANL	USBN2	12.75	63.89	30.06								
		Sub-Loop Distribution Per 2-Wire Analog Voice Grade Loop - Zone 3	I	3	UEANL	USBN2	21.45	63.89	30.06								
		Order Coordination for Unbundled Sub-Loops, per sub-loop pair			UEANL	USBMC		7.92	7.92								
		Sub-Loop Distribution Per 4-Wire Analog Voice Grade Loop - Zone 1		1	UEANL	USBN4	11.76	76.75	42.92								
		Sub-Loop Distribution Per 4-Wire Analog Voice Grade Loop - Zone 2		2	UEANL	USBN4	16.84	76.75	42.92								
		Sub-Loop Distribution Per 4-Wire Analog Voice Grade Loop - Zone 3		3	UEANL	USBN4	19.27	76.75	42.92								
		Order Coordination for Unbundled Sub-Loops, per sub-loop pair			UEANL	USBMC		7.92	7.92								
		Sub-Loop 2-Wire Intrabuilding Network Cable (INC)	I		UEANL	USBR2	2.91	51.48	17.65								
		Order Coordination for Unbundled Sub-Loops, per sub-loop pair			UEANL	USBMC		7.92	7.92								
		Sub-Loop 4-Wire Intrabuilding Network Cable (INC)	I		UEANL	USBR4	6.58	57.54	23.71								
		Order Coordination for Unbundled Sub-Loops, per sub-loop pair			UEANL	USBMC		7.92	7.92								
		Loop Testing - Basic 1st Half Hour			UEANL	URET1		33.17	33.17								
		Loop Testing - Basic Additional Half Hour			UEANL	URETA		19.28	19.28								
		2 Wire Copper Unbundled Sub-Loop Distribution - Zone 1	I	1	UEF	UCS2X	6.26	63.89	30.06								
		2 Wire Copper Unbundled Sub-Loop Distribution - Zone 2	I	2	UEF	UCS2X	10.07	63.89	30.06								
		2 Wire Copper Unbundled Sub-Loop Distribution - Zone 3	I	3	UEF	UCS2X	12.70	63.89	30.06								
		Order Coordination for Unbundled Sub-Loops, per sub-loop pair			UEF	USBMC		7.92	7.92								
		4 Wire Copper Unbundled Sub-Loop Distribution - Zone 1	I	1	UEF	UCS4X	8.03	76.75	42.92								
		4 Wire Copper Unbundled Sub-Loop Distribution - Zone 2	I	2	UEF	UCS4X	10.71	76.75	42.92								
		4 Wire Copper Unbundled Sub-Loop Distribution - Zone 3	I	3	UEF	UCS4X	6.08	76.75	42.92								
		Order Coordination for Unbundled Sub-Loops, per sub-loop pair			UEF	USBMC		7.92	7.92								
		Loop Testing - Basic 1st Half Hour			UEF	URET1		33.17	33.17								
		Loop Testing - Basic Additional Half Hour			UEF	URETA		19.28	19.28								
	Unbundled Network Terminating Wire (UNTW)																
		Unbundled Network Terminating Wire (UNTW) per Pair			UENTW	UENPP	0.3454	14.72	14.72								
	Network Interface Device (NID)																
		Network Interface Device (NID) - 1-2 lines			UENTW	UND12		42.26	27.83								
		Network Interface Device (NID) - 1-6 lines			UENTW	UND16		62.86	48.43								
		Network Interface Device Cross Connect - 2 W			UENTW	UNDC2		5.73	5.73								
		Network Interface Device Cross Connect - 4W			UENTW	UNDC4		5.73	5.73								
UNE OTHER, PROVISIONING ONLY - NO RATE																	
		NID - Dispatch and Service Order for NID installation			UENTW	UNDBX	0.00	0.00									
		UNTW Circuit Id Establishment, Provisioning Only - No Rate			UENTW	UENCE	0.00	0.00									
		Unbundled Contract Name, Provisioning Only - No Rate			UEANL,UEF,UEQ,UENTW	UNECN	0.00	0.00									
UNE OTHER, PROVISIONING ONLY - NO RATE																	

UNBUNDLED NETWORK ELEMENTS - Louisiana														Attachment: 2		Exhibit: A	
CATEGORY		RATE ELEMENTS	Interim	Zone	BCS	USOC	RATES ($)					Svc Order Submitted Elec per LSR	Svc Order Submitted Manually per LSR	Incremental Charge - Manual Svc Order vs. Electronic-1st	Incremental Charge - Manual Svc Order vs. Electronic-Add'l	Incremental Charge - Manual Svc Order vs. Electronic-Disc 1st	Incremental Charge - Manual Svc Order vs. Electronic-Disc Add'l
							Rec	Nonrecurring		Nonrecurring Disconnect		OSS Rates ($)					
								First	Add'l	First	Add'l	SOMEC	SOMAN	SOMAN	SOMAN	SOMAN	SOMAN
		Unbundled Contact Name, Provisioning Only - no rate			UAL,UCL,UDC,UDL, UDN,UEA,UHL,ULC	UNECN	0.00	0.00									
		Unbundled Sub-Loop Feeder-2 Wire Cross Box Jumper - no rate			UEA,UDN,UCL,UDC	USBFQ	0.00	0.00									
		Unbundled Sub-Loop Feeder-4 Wire Cross Box Jumper - no rate			UEA,USL,UCL,UDL	USBFR	0.00	0.00									
		Unbundled DS1 Loop - Superframe Format Option - no rate			USL	CCOSF	0.00	0.00									
		Unbundled DS1 Loop - Expanded Superframe Format option - no rate			USL	CCOEF	0.00	0.00									
HIGH CAPACITY UNBUNDLED LOCAL LOOP																	
		High Capacity Unbundled Local Loop - DS3 - Per Mile per month			UE3	1L5ND	10.04										
		High Capacity Unbundled Local Loop - DS3 - Facility Termination per month			UE3	UE3PX	362.34	438.46	256.30								
		High Capacity Unbundled Local Loop - STS-1 - Per Mile per month			UDLSX	1L5ND	10.04										
		High Capacity Unbundled Local Loop - STS-1 - Facility Termination per month			UDLSX	UDLS1	374.56	438.46	256.30								
LOOP MAKE-UP																	
		Loop Makeup - Preordering Without Reservation, per working or spare facility queried (Manual).			UMK	UMKLW		23.29	23.29								
		Loop Makeup - Preordering With Reservation, per spare facility queried (Manual).			UMK	UMKLP		24.70	24.70								
		Loop Makeup--With or Without Reservation, per working or spare facility queried (Mechanized)			UMK	UMKMQ		0.19	0.19								
LINE SHARING AND LINE SPLITTING																	
	NOTE 1: The Line Sharing monthly recurring rates for all installations completed from October 02, 2003 through midnight October 01, 2004 shall be billed as follows:																
	NOTE 1: 10/02/2003 – 10/01/2004: 25% of the rate for an unbundled copper loop non-designed ("UCLND")																
	NOTE 1: 10/02/2004 – 10/01/2005: 50% of the rate for UCLND																
	NOTE 1: 10/02/2005 – 10/01/2006: 75% of the rate for UCLND																
	NOTE 1: Above will apply to USOCS: ULSDT and ULSCT																
	****NOTE 2: The Line Sharing monthly recurring rates with USOCs ULSDC and ULSCC applies only to circuits installed and inservice on or before October 1, 2003**																
	LINE SHARING																
	SPLITTERS-CENTRAL OFFICE BASED																
		Line Sharing Splitter, per System 96 Line Capacity			ULS	ULSDA	187.17	183.33	0.00								
		Line Sharing Splitter, per System 24 Line Capacity			ULS	ULSDB	46.79	183.33	0.00								
		Line Sharing Splitter, Per System, 8 Line Capacity			ULS	ULSD8	15.59	183.33	0.00								
		Line Sharing-DLEC Owned Splitter in CO-CFA activaton-deactivation (per LSOD)			ULS	ULSDG		83.98	0.00								
	END USER ORDERING-CENTRAL OFFICE BASED LINE SHARING																
		Line Sharing - per Line Activation (BST Owned splitter) - OBSOLETE see **NOTE 2			ULS	ULSDC	0.61	17.97	10.29								
		Line Share Service, TRO per line activation, BST owned splitter - Central Office Located (25% of UCLND) - please see NOTE 1 (E:10/2/2003)			ULS	ULSDT	3.10	17.97	10.29								
		Line Share Service, TRO per line activation, BST owned splitter - Central Office Located (50% of UCLND) - please see NOTE 1 (E:10/2/2004)			ULS	ULSDT	6.20	17.97	10.29								
		Line Share Service, TRO per line activation, BST owned splitter - Central Office Located (75% of UCLND) - please see NOTE 1 (E:10/2/2005)			ULS	ULSDT	9.30	17.97	10.29								
		Line Sharing - per Subsequent Activity per Line Rearrangement(BST Owned Splitter)			ULS	ULSDS		15.91	7.95								
		Line Sharing - per Subsequent Activity per Line Rearrangement(DLEC Owned Splitter)			ULS	ULSCS		15.91	7.95								
		Line Sharing - per Line Activation (DLEC owned Splitter) - OBSOLETE see **NOTE 2			ULS	ULSCC	0.61	47.44	19.31								

UNBUNDLED NETWORK ELEMENTS - Louisiana														Attachment: 2		Exhibit: A	
CATEGORY		RATE ELEMENTS	Interim	Zone	BCS	USOC	RATES ($)					Svc Order Submitted Elec per LSR	Svc Order Submitted Manually per LSR	Incremental Charge - Manual Svc Order vs. Electronic-1st	Incremental Charge - Manual Svc Order vs. Electronic-Add'l	Incremental Charge - Manual Svc Order vs. Electronic-Disc 1st	Incremental Charge - Manual Svc Order vs. Electronic-Disc Add'l
							Rec	Nonrecurring		Nonrecurring Disconnect		OSS Rates ($)					
								First	Add'l	First	Add'l	SOMEC	SOMAN	SOMAN	SOMAN	SOMAN	SOMAN
		Line Share Service, TRO per line activation, CLEC owned splitter - Central Office Located (25% of UCLND) - please see NOTE 1 (E:10/2/2003)			ULS	ULSCT	3.10	47.44	19.31								
		Line Share Service, TRO per line activation, CLEC owned splitter - Central Office Located (50% of UCLND) - please see NOTE 1 (E:10/2/2004)			ULS	ULSCT	6.20	47.44	19.31								
		Line Share Service, TRO per line activation, CLEC owned splitter - Central Office Located (75% of UCLND) - please see NOTE 1 (E:10/2/2005)			ULS	ULSCT	9.30	47.44	19.31								
	LINE SPLITTING																
	END USER ORDERING-CENTRAL OFFICE BASED																
		Line Splitting - per line activation DLEC owned splitter			UEPSR UEPSB	UREOS	0.61										
		Line Splitting - per line activation BST owned - physical			UEPSR UEPSB	UREBP	0.61	17.97	10.29								
		Line Splitting - per line activation BST owned - virtual			UEPSR UEPSB	UREBV	0.61	17.97	10.29								
	MAINTENANCE																
		No Trouble Found - per 1/2 hour increments - Basic						80.00	55.00								
		No Trouble Found - per 1/2 hour increments - Overtime						120.00	82.50								
		No Trouble Found - per 1/2 hour increments - Premium						160.00	110.00								
UNBUNDLED DEDICATED TRANSPORT																	
	INTEROFFICE CHANNEL - DEDICATED TRANSPORT																
		Interoffice Channel - Dedicated Transport - 2-Wire Voice Grade - Per Mile per month			U1TVX	1L5XX	0.013										
		Interoffice Channel - Dedicated Transport- 2- Wire Voice Grade - Facility Termination			U1TVX	U1TV2	22.60	39.36	26.62								
		Interoffice Channel - Dedicated Transpor t- 2-Wire Voice Grade Rev Bat. - Per Mile per month			U1TVX	1L5XX	0.013										
		Interoffice Channel - Dedicated Transport- 2- Wire VG Rev Bat. - Facility Termination			U1TVX	U1TR2	22.60	39.36	26.62								
		Interoffice Channel - Dedicated Transport - 4-Wire Voice Grade - Per Mile per month			U1TVX	1L5XX	0.013										
		Interoffice Channel - Dedicated Transport - 4- Wire Voice Grade - Facility Termination			U1TVX	U1TV4	19.81	39.36	26.62								
		Interoffice Channel - Dedicated Transport - 56 kbps - per mile per month			U1TDX	1L5XX	0.013										
		Interoffice Channel - Dedicated Transport - 56 kbps - Facility Termination			U1TDX	U1TD5	15.61	39.37	26.62								
		Interoffice Channel - Dedicated Transport - 64 kbps - per mile per month			U1TDX	1L5XX	0.013										
		Interoffice Channel - Dedicated Transport - 64 kbps - Facility Termination			U1TDX	U1TD6	15.61	39.37	26.62								
		Interoffice Channel - Dedicated Channel - DS1 - Per Mile per month			U1TD1	1L5XX	0.2652										
		Interoffice Channel - Dedicated Tranport - DS1 - Facility Termination			U1TD1	U1TF1	70.47	86.69	79.44								
		Interoffice Channel - Dedicated Transport - DS3 - Per Mile per month			U1TD3	1L5XX	6.04										
		Interoffice Channel - Dedicated Transport - DS3 - Facility Termination per month			U1TD3	U1TF3	850.45	270.69	158.05								
		Interoffice Channel - Dedicated Transport - STS-1 - Per Mile per month			U1TS1	1L5XX	6.04										
		Interoffice Channel - Dedicated Transport - STS-1 - Facility Termination			U1TS1	U1TFS	830.19	270.69	158.05								
DARK FIBER																	
		Dark Fiber, Four Fiber Strands, Per Route Mile or Fraction Thereof per month - Interoffice Channel			UDF, UDFCX	1L5DF	25.28										
		NRC Dark Fiber - Interoffice Channel			UDF, UDFCX	UDF14		620.60	133.88								
		Dark Fiber, Four Fiber Strands, Per Route Mile or Fraction Thereof per month - Local Loop			UDF, UDFCX	1L5DL	52.23										
		NRC Dark Fiber - Local Loop			UDF, UDFCX	UDFL4		620.60	133.88								

UNBUNDLED NETWORK ELEMENTS - Louisiana														Attachment: 2		Exhibit: A	
CATEGORY		RATE ELEMENTS	Interim	Zone	BCS	USOC	RATES ($)					Svc Order Submitted Elec per LSR	Svc Order Submitted Manually per LSR	Incremental Charge - Manual Svc Order vs. Electronic-1st	Incremental Charge - Manual Svc Order vs. Electronic-Add'l	Incremental Charge - Manual Svc Order vs. Electronic-Disc 1st	Incremental Charge - Manual Svc Order vs. Electronic-Disc Add'l
							Rec	Nonrecurring		Nonrecurring Disconnect		OSS Rates ($)					
								First	Add'l	First	Add'l	SOMEC	SOMAN	SOMAN	SOMAN	SOMAN	SOMAN
8XX ACCESS TEN DIGIT SCREENING																	
		8XX Access Ten Digit Screening, Per Call			OHD		0.0006387										
		8XX Access Ten Digit Screening, Reservation Charge Per 8XX Number Reserved			OHD	N8R1X		2.51	0.43								
		8XX Access Ten Digit Screening, Per 8XX No. Established W/O POTS Translations			OHD			5.77	0.78								
		8XX Access Ten Digit Screening, Per 8XX No. Established With POTS Translations			OHD	N8FTX		5.77	0.78								
		8XX Access Ten Digit Screening, Customized Area of Service Per 8XX Number			OHD	N8FCX		2.51	1.26								
		8XX Access Ten Digit Screening, Multiple InterLATA CXR Routing Per CXR Requested Per 8XX No.			OHD	N8FMX		2.93	1.68								
		8XX Access Ten Digit Screening, Change Charge Per Request			OHD	N8FAX		2.93	0.43								
		8XX Access Ten Digit Screening, Call Handling and Destination Features			OHD	N8FDX		2.51									
		8XX Access Ten Digit Screening, w/ 8XX No. Delivery, per query			OHD		0.0006387										
		8XX Access Ten Digit Screening, w/ POTS No. Delivery, per query			OHD		0.0006387										
LINE INFORMATION DATA BASE ACCESS (LIDB)																	
		LIDB Common Transport Per Query			OQT		0.0000221										
		LIDB Validation Per Query			OQU		0.0135077										
		LIDB Originating Point Code Establishment or Change			OQT, OQU	NRBPX		33.33									
SIGNALING (CCS7)																	
		CCS7 Signaling Termination, Per STP Port			UDB	PT8SX	147.60										
		CCS7 Signaling Usage, Per TCAP Message			UDB		0.000064										
		CCS7 Signaling Connection, Per link (A link)			UDB	TPP++	15.77	34.50	34.50								
		CCS7 Signaling Connection, Per link (B link) (also known as D link)			UDB	TPP++	15.77	34.50	34.50								
		CCS7 Signaling Usage, Per ISUP Message			UDB		0.000016										
		CCS7 Signaling Usage Surrogate, per link per LATA			UDB	STU56	732.10										
		CCS7 Signaling Point Code, per Originating Point Code Establishment or Change, per STP affected			UDB	CCAPO		28.17	28.17								
		CCS7 Signaling Point Code, per Destination Point Code Establishment or Change, Per Stp Affected			UDB	CCAPD		28.17	28.17								
E911 SERVICE																	
		Local Channel - Dedicated - 2-wr Voice Grade - Zone 1					18.32	187.51	32.21								
		Local Channel - Dedicated - 2-wr Voice Grade - Zone 2					18.32	187.51	32.21								
		Local Channel - Dedicated - 2-wr Voice Grade - Zone 3					18.32	187.51	32.21								
		Interoffice Transport - Dedicated - 2-wr Voice Grade Per Mile					0.013										
		Interoffice Transport - Dedicated - 2-wr Voice Grade Per Facility Termination					22.60	39.36	26.62								
		Local Channel - Dedicated - DS1 - Zone 1					39.18	172.34	149.27								
		Local Channel - Dedicated - DS1 - Zone 2					121.58	172.34	149.27								
		Local Channel - Dedicated - DS1 - Zone 3					70.02	172.34	149.27								
		Interoffice Transport - Dedicated - DS1 Per Mile					0.2652										
		Interoffice Transport - Dedicated - DS1 Per Facility Termination					70.47	86.69	79.44								
CALLING NAME (CNAM) SERVICE																	
		CNAM For DB Owners - Service Establishment			OQV			22.29									
		CNAM For Non DB Owners - Service Establishment			OQV			22.29									
		CNAM For DB Owners - Service Provisioning With Point Code Establishment			OQV			962.22	711.64								
		CNAM For Non DB Owners - Service Provisioning With Point Code Establishment			OQV			332.43	238.05								
		CNAM for DB Owners, Per Query			OQV		0.0010217										
		CNAM for Non DB Owners, Per Query			OQV		0.0010217										
SELECTIVE ROUTING																	

UNBUNDLED NETWORK ELEMENTS - Louisiana														Attachment: 2		Exhibit: A	
CATEGORY		RATE ELEMENTS	Interim	Zone	BCS	USOC	RATES ($)					Svc Order Submitted Elec per LSR	Svc Order Submitted Manually per LSR	Incremental Charge - Manual Svc Order vs. Electronic-1st	Incremental Charge - Manual Svc Order vs. Electronic-Add'l	Incremental Charge - Manual Svc Order vs. Electronic-Disc 1st	Incremental Charge - Manual Svc Order vs. Electronic-Disc Add'l
							Rec	Nonrecurring		Nonrecurring Disconnect		OSS Rates ($)					
								First	Add'l	First	Add'l	SOMEC	SOMAN	SOMAN	SOMAN	SOMAN	SOMAN
		Selective Routing Per Unique Line Class Code Per Request Per Switch						82.25	82.25								
VIRTUAL COLLOCATION																	
		Virtual Collocation-2 Wire Cross Connects (Loop) for Line Splitting			UEPSR UEPSB	VE1LS	0.0296	11.94	11.46	0.00	0.00						
PHYSICAL COLLOCATION																	
		Physical Collocation-2 Wire Cross Connects (Loop) for Line Splitting			UEPSR UEPSB	PE1LS	0.0318	11.94	11.46	0.00	0.00						
AIN SELECTIVE CARRIER ROUTING																	
		Regional Service Establishment			UEBIB	SRCEC		100,209.33									
		End Office Establishment			UEBIB	SRCEO		164.29	164.29								
		Query NRC, per query			UEBIB		0.0030293										
AIN - BELLSOUTH AIN SMS ACCESS SERVICE																	
		AIN SMS Access Service - Service Establishment, Per State, Initial Setup			A1N	CAMSE		38.30	38.30								
		AIN SMS Access Service - Port Connection - Dial/Shared Access			A1N	CAMDP		7.60	7.60								
		AIN SMS Access Service - Port Connection - ISDN Access			A1N	CAM1P		7.60	7.60								
		AIN SMS Access Service - User Identification Codes - Per User ID Code			A1N	CAMAU		33.99	33.99								
		AIN SMS Access Service - Security Card, Per User ID Code, Initial or Replacement			A1N	CAMRC		41.39	41.39								
		AIN SMS Access Service - Storage, Per Unit (100 Kilobytes)					0.0022										
		AIN SMS Access Service - Session, Per Minute					0.5795										
		AIN SMS Access Service - Company Performed Session, Per Minute					0.8104										
AIN - BELLSOUTH AIN TOOLKIT SERVICE																	
		AIN Toolkit Service - Service Establishment Charge, Per State, Initial Setup			CAM	BAPSC		38.30	38.30								
		AIN Toolkit Service - Training Session, Per Customer				BAPVX		4,175.10	4,175.10								
		AIN Toolkit Service - Trigger Access Charge, Per Trigger, Per DN, Term. Attempt				BAPTT		7.60	7.60								
		AIN Toolkit Service - Trigger Access Charge, Per Trigger, Per DN, Off-Hook Delay				BAPTD		7.60	7.60								
		AIN Toolkit Service - Trigger Access Charge, Per Trigger, Per DN, Off-Hook Immediate				BAPTM		7.60	7.60								
		AIN Toolkit Service - Trigger Access Charge, Per Trigger, Per DN, 10-Digit PODP				BAPTO		33.47	33.47								
		AIN Toolkit Service - Trigger Access Charge, Per Trigger, Per DN, CDP				BAPTC		33.47	33.47								
		AIN Toolkit Service - Trigger Access Charge, Per Trigger, Per DN, Feature Code				BAPTF		33.47	33.47								
		AIN Toolkit Service - Query Charge, Per Query					0.0536446										
		AIN Toolkit Service - Type 1 Node Charge, Per AIN Toolkit Subscription, Per Node, Per Query					0.006569										
		AIN Toolkit Service - SCP Storage Charge, Per SMS Access Account, Per 100 Kilobytes					0.06										
		AIN Toolkit Service - Monthly report - Per AIN Toolkit Service Subscription			CAM	BAPMS	10.90	7.60	7.60								
		AIN Toolkit Service - Special Study - Per AIN Toolkit Service Subscription			CAM	BAPLS	2.80	8.41	8.41								
		AIN Toolkit Service - Call Event Report - Per AIN Toolkit Service Subscription			CAM	BAPDS	8.20	7.60	7.60								
		AIN Toolkit Service - Call Event Special Study - Per AIN Toolkit Service Subscription			CAM	BAPES	0.09	8.41	8.41								
ENHANCED EXTENDED LINK (EELs)																	
	NOTE: The monthly recurring and non-recurring charges below will apply and the Switch-As-Is Charge will not apply for UNE combinations provisioned as ' Ordinarily Combined' Network Elements.																
	NOTE: The monthly recurring and the Switch-As-Is Charge and not the non-recurring charges below will apply for UNE combinations provisioned as ' Currently Combined' Network Elements.																
	EXTENTED 2-WIRE VOICE GRADE EXTENDED LOOP WITH DEDICATED DS1 INTEROFFICE TRANSPORT																

UNBUNDLED NETWORK ELEMENTS - Louisiana														Attachment: 2		Exhibit: A	
CATEGORY		RATE ELEMENTS	Interim	Zone	BCS	USOC	RATES ($)					Svc Order Submitted Elec per LSR	Svc Order Submitted Manually per LSR	Incremental Charge - Manual Svc Order vs. Electronic-1st	Incremental Charge - Manual Svc Order vs. Electronic-Add'l	Incremental Charge - Manual Svc Order vs. Electronic-Disc 1st	Incremental Charge - Manual Svc Order vs. Electronic-Disc Add'l
							Rec	Nonrecurring		Nonrecurring Disconnect		OSS Rates ($)					
								First	Add'l	First	Add'l	SOMEC	SOMAN	SOMAN	SOMAN	SOMAN	SOMAN
		First 2-Wire VG Loop (SL2) in Combination - Zone 1		1	UNCVX	UEAL2	14.93	94.21	45.09								
		First 2-Wire VG Loop (SL2) in Combination - Zone 2		2	UNCVX	UEAL2	25.35	94.21	45.09								
		First 2-Wire VG Loop (SL2) in Combination - Zone 3		3	UNCVX	UEAL2	50.46	94.21	45.09								
		Interoffice Transport - Dedicated - DS1 combination - Per Mile per month			UNC1X	1L5XX	0.2652										
		Interoffice Transport - Dedicated - DS1 combination - Facility Termination per month			UNC1X	U1TF1	70.47	143.58	103.88								
		1/0 Channelization System in combination Per Month			UNC1X	MQ1	105.09	59.97	12.96								
		Voice Grade COCI - Per Month			UNCVX	1D1VG	0.6497	5.91	4.26								
		Each Additional 2-Wire VG Loop (SL 2) in Combination - Zone 1		1	UNCVX	UEAL2	14.93	94.21	45.09								
		Each Additional 2-Wire VG Loop (SL 2) in Combination - Zone 2		2	UNCVX	UEAL2	25.35	94.21	45.09								
		Each Additional 2-Wire VG Loop (SL 2) in Combination - Zone 3		3	UNCVX	UEAL2	50.46	94.21	45.09								
		Voice Grade COCI - Per Month			UNCVX	1D1VG	0.6497	5.91	4.26								
		Nonrecurring Currently Combined Network Elements Switch -As-Is Charge			UNC1X	UNCCC		5.43	5.43								
	EXTENDED 4-WIRE VOICE GRADE EXTENDED LOOP WITH DEDICATED DS1 INTEROFFICE TRANSPORT																
		First 4-Wire Analog Voice Grade Loop in Combination - Zone 1		1	UNCVX	UEAL4	30.81	94.21	45.09								
		First 4-Wire Analog Voice Grade Loop in Combination - Zone 2		2	UNCVX	UEAL4	38.32	94.21	45.09								
		First 4-Wire Analog Voice Grade Loop in Combination - Zone 3		3	UNCVX	UEAL4	60.39	94.21	45.09								
		Interoffice Transport - Dedicated - DS1 combination - Per Mile Per Month			UNC1X	1L5XX	0.2652										
		Interoffice Transport - Dedicated - DS1 - Facility Termination Per Month			UNC1X	U1TF1	70.47	143.58	103.88								
		1/0 Channel System in combination Per Month			UNC1X	MQ1	105.09	59.97	12.96								
		Voice Grade COCI in combination - per month			UNCVX	1D1VG	0.6497	5.91	4.26								
		Additional 4-Wire Analog Voice Grade Loop in same DS1 Interoffice Transport Combination - Zone 1		1	UNCVX	UEAL4	30.81	94.21	45.09								
		Additional 4-Wire Analog Voice Grade Loop in same DS1 Interoffice Transport Combination - Zone 2		2	UNCVX	UEAL4	38.32	94.21	45.09								
		Additional 4-Wire Analog Voice Grade Loop in same DS1 Interoffice Transport Combination - Zone 3		3	UNCVX	UEAL4	60.39	94.21	45.09								
		Additional Voice Grade COCI in combination - per month			UNCVX	1D1VG	0.6497	5.91	4.26								
		Nonrecurring Currently Combined Network Elements Switch -As-Is Charge			UNC1X	UNCCC		5.43	5.43								
	EXTENDED 4-WIRE 56 KBPS EXTENDED DIGITAL LOOP WITH DEDICATED DS1 INTEROFFICE TRANSPORT																
		First 4-Wire 56Kbps Digital Grade Loop in Combination - Zone 1		1	UNCDX	UDL56	30.99	94.21	45.09								
		First 4-Wire 56Kbps Digital Grade Loop in Combination - Zone 2		2	UNCDX	UDL56	36.78	94.21	45.09								
		First 4-Wire 56Kbps Digital Grade Loop in Combination - Zone 3		3	UNCDX	UDL56	38.92	94.21	45.09								
		Interoffice Transport - Dedicated - DS1 combination - Per Mile Per Month			UNC1X	1L5XX	0.2652										
		Interoffice Transport - Dedicated - DS1 - combination Facility Termination Per Month			UNC1X	U1TF1	70.47	143.58	103.88								
		1/0 Channel System in combination Per Month			UNC1X	MQ1	105.09	59.97	12.96								
		OCU-DP COCI (data) per month (2.4-64kbs)			UNCDX	1D1DD	1.38	5.91	4.26								
		Additional 4-Wire 56Kbps Digital Grade Loop in same DS1 Interoffice Transport Combination - Zone 1		1	UNCDX	UDL56	30.99	94.21	45.09								
		Additional 4-Wire 56Kbps Digital Grade Loop in same DS1 Interoffice Transport Combination - Zone 2		2	UNCDX	UDL56	36.78	94.21	45.09								
		Additional 4-Wire 56Kbps Digital Grade Loop in same DS1 Interoffice Transport Combination - Zone 3		3	UNCDX	UDL56	38.92	94.21	45.09								

UNBUNDLED NETWORK ELEMENTS - Louisiana														Attachment: 2		Exhibit: A	
CATEGORY		RATE ELEMENTS	Interim	Zone	BCS	USOC	RATES ($)					Svc Order Submitted Elec per LSR	Svc Order Submitted Manually per LSR	Incremental Charge - Manual Svc Order vs. Electronic-1st	Incremental Charge - Manual Svc Order vs. Electronic-Add'l	Incremental Charge - Manual Svc Order vs. Electronic-Disc 1st	Incremental Charge - Manual Svc Order vs. Electronic-Disc Add'l
							Rec	Nonrecurring		Nonrecurring Disconnect		OSS Rates ($)					
								First	Add'l	First	Add'l	SOMEC	SOMAN	SOMAN	SOMAN	SOMAN	SOMAN
		Additional OCU-DP COCI (data) - in combination per month (2.4-64kbs)			UNCDX	1D1DD	1.38	5.91	4.26								
		Nonrecurring Currently Combined Network Elements Switch -As-Is Charge			UNC1X	UNCCC		5.43	5.43								
	EXTENDED 4-WIRE 64 KBPS EXTENDED DIGITAL LOOP WITH DEDICATED DS1 INTEROFFICE TRANSPORT																
		First 4-Wire 64Kbps Digital Grade Loop in Combination - Zone 1		1	UNCDX	UDL64	30.99	94.21	45.09								
		First 4-Wire 64Kbps Digital Grade Loop in Combination - Zone 2		2	UNCDX	UDL64	36.78	94.21	45.09								
		First 4-Wire 64Kbps Digital Grade Loop in Combination - Zone 3		3	UNCDX	UDL64	38.92	94.21	45.09								
		Interoffice Transport - Dedicated - DS1 combination - Per Mile Per Month			UNC1X	1L5XX	0.2652										
		interoffice Transport - Dedicated - DS1 combination - Facility Termination Per Month			UNC1X	U1TF1	70.47	143.58	103.88								
		1/0 Channel System in combination Per Month			UNC1X	MQ1	105.09	59.97	12.96								
		OCU-DP COCI (data) - in combination - per month (2.4-64kbs)			UNCDX	1D1DD	1.38	5.91	4.26								
		Additional 4-Wire 64Kbps Digital Grade Loop in same DS1 Interoffice Transport Combination - Zone 1		1	UNCDX	UDL64	30.99	94.21	45.09								
		Additional 4-Wire 64Kbps Digital Grade Loop in same DS1 Interoffice Transport Combination - Zone 2		2	UNCDX	UDL64	36.78	94.21	45.09								
		Additional 4-Wire 64Kbps Digital Grade Loop in same DS1 Interoffice Transport Combination - Zone 3		3	UNCDX	UDL64	38.92	94.21	45.09								
		Additional OCU-DP COCI (data) - in combination - per month (2.4-64kbs)			UNCDX	1D1DD	1.38	5.91	4.26								
		Nonrecurring Currently Combined Network Elements Switch -As-Is Charge			UNC1X	UNCCC		5.43	5.43								
	EXTENDED 4-WIRE DS1 DIGITAL EXTENDED LOOP WITH DEDICATED DS1 INTEROFFICE TRANSPORT																
		4-Wire DS1 Digital Loop in Combination - Zone 1		1	UNC1X	USLXX	85.70	169.22	100.89								
		4-Wire DS1 Digital Loop in Combination - Zone 2		2	UNC1X	USLXX	194.96	169.22	100.89								
		4-Wire DS1 Digital Loop in Combination - Zone 3		3	UNC1X	USLXX	491.94	169.22	100.89								
		Interoffice Transport - Dedicated - DS1 combination - Per Mile Per Month			UNC1X	1L5XX	0.2652										
		Interoffice Transport - Dedicated - DS1 combination - Facility Termination Per Month			UNC1X	U1TF1	70.47	143.58	103.88								
		Nonrecurring Currently Combined Network Elements Switch -As-Is Charge			UNC1X	UNCCC		5.43	5.43								
	EXTENDED 4-WIRE DS1 DIGITAL EXTENDED LOOP WITH DEDICATED DS3 INTEROFFICE TRANSPORT																
		First DS1Loop in Combination - Zone 1		1	UNC1X	USLXX	85.70	169.22	100.89								
		First DS1Loop in Combination - Zone 2		2	UNC1X	USLXX	194.96	169.22	100.89								
		First DS1Loop in Combination - Zone 3		3	UNC1X	USLXX	491.94	169.22	100.89								
		Interoffice Transport - Dedicated - DS3 combination - Per Mile Per Month			UNC3X	1L5XX	6.04										
		Interoffice Transport - Dedicated - DS3 - Facility Termination per month			UNC3X	U1TF3	850.45	296.68	121.16								
		3/1Channel System in combination per month			UNC3X	MQ3	201.48	107.05	91.25								
		DS1 COCI in combination per month			UNC1X	UC1D1	11.78	5.91	4.26								
		Additional DS1Loop in DS3 Interoffice Transport Combination - Zone 1		1	UNC1X	USLXX	85.70	169.22	100.89								
		Additional DS1Loop in DS3 Interoffice Transport Combination - Zone 2		2	UNC1X	USLXX	194.96	169.22	100.89								
		Additional DS1Loop in DS3 Interoffice Transport Combination - Zone 3		3	UNC1X	USLXX	491.94	169.22	100.89								
		Additoinal DS1 COCI in combination per month			UNC1X	UC1D1	11.78	5.91	4.26								
		Nonrecurring Currently Combined Network Elements Switch -As-Is Charge			UNC3X	UNCCC		5.43	5.43								
	EXTENDED 2-WIRE VOICE GRADE EXTENDED LOOP/ 2 WIRE VOICE GRADE INTEROFFICE TRANSPORT																
		2-WireVG Loop in combination - Zone 1		1	UNCVX	UEAL2	14.93	94.21	45.09								
		2-WireVG Loop in combination - Zone 2		2	UNCVX	UEAL2	25.35	94.21	45.09								

UNBUNDLED NETWORK ELEMENTS - Louisiana														Attachment: 2		Exhibit: A	
CATEGORY		RATE ELEMENTS	Interim	Zone	BCS	USOC	RATES ($)					Svc Order Submitted Elec per LSR	Svc Order Submitted Manually per LSR	Incremental Charge - Manual Svc Order vs. Electronic-1st	Incremental Charge - Manual Svc Order vs. Electronic-Add'l	Incremental Charge - Manual Svc Order vs. Electronic-Disc 1st	Incremental Charge - Manual Svc Order vs. Electronic-Disc Add'l
							Rec	Nonrecurring		Nonrecurring Disconnect		OSS Rates ($)					
								First	Add'l	First	Add'l	SOMEC	SOMAN	SOMAN	SOMAN	SOMAN	SOMAN
		2-WireVG Loop in combination - Zone 3		3	UNCVX	UEAL2	50.46	94.21	45.09								
		Interoffice Transport - 2-wire VG - Dedicated- Per Mile Per Month			UNCVX	1L5XX	0.013										
		Interoffice Transport - 2-wire VG - Dedicated - Facility Termination per month			UNCVX	U1TV2	22.60	72.60	41.75								
		Nonrecurring Currently Combined Network Elements Switch -As-Is Charge			UNCVX	UNCCC		5.43	5.43								
	EXTENDED 4-WIRE VOICE GRADE EXTENDED LOOP/ 4 WIRE VOICE GRADE INTEROFFICE TRANSPORT																
		4-WireVG Loop in combination - Zone 1		1	UNCVX	UEAL4	30.81	94.21	45.09								
		4-WireVG Loop in combination - Zone 2		2	UNCVX	UEAL4	38.32	94.21	45.09								
		4-WireVG Loop in combination - Zone 3		3	UNCVX	UEAL4	60.39	94.21	45.09								
		Interoffice Transport - 4-wire VG - Dedicated - Per Mile Per Month			UNCVX	1L5XX	0.013										
		Interoffice Transport - 4-wire VG - Dedicated - Facility Termination per month			UNCVX	U1TV4	19.81	72.60	41.75								
		Nonrecurring Currently Combined Network Elements Switch -As-Is Charge			UNCVX	UNCCC		5.43	5.43								
	EXTENDED DS3 DIGITAL EXTENDED LOOP WITH DEDICATED DS3 INTEROFFICE TRANSPORT																
		DS3 Local Loop in combination - per mile per month			UNC3X	1L5ND	10.04										
		DS3 Local Loop in combination - Facility Termination per month			UNC3X	UE3PX	362.34	188.45	125.51								
		Interoffice Transport - Dedicated - DS3 - Per Mile per month			UNC3X	1L5XX	6.04										
		Interoffice Transport - Dedicated - DS3 combination - Facility Termination per month			UNC3X	U1TF3	850.45	296.68	121.16								
		Nonrecurring Currently Combined Network Elements Switch -As-Is Charge			UNC3X	UNCCC		5.43	5.43								
	EXTENDED STS-1 DIGITAL EXTENDED LOOP WITH DEDICATED STS-1 INTEROFFICE TRANSPORT																
		STS-1 Local Lolp in combination - per mile per month			UNCSX	1L5ND	10.04										
		STS-1 Local Loop in combination - Facility Termination per month			UNCSX	UDLS1	374.56	188.45	125.51								
		Interoffice Transport - Dedicated - STS-1 combination - per mile per month			UNCSX	1L5XX	6.04										
		Interoffice Transport - Dedicated - STS-1 combination - Facility Termination per month			UNCSX	U1TFS	830.19	296.68	121.16								
		Nonrecurring Currently Combined Network Elements Switch -As-Is Charge			UNCSX	UNCCC		5.43	5.43								
	EXTENDED 2-WIRE ISDN EXTENDED LOOP WITH DS1 INTEROFFICE TRANSPORT																
		First 2-Wire ISDN Loop in Combination - Zone 1		1	UNCNX	U1L2X	22.09	94.21	45.09								
		First 2-Wire ISDN Loop in Combination - Zone 2		2	UNCNX	U1L2X	35.28	94.21	45.09								
		First 2-Wire ISDN Loop in Combination - Zone 3		3	UNCNX	U1L2X	65.18	94.21	45.09								
		Interoffice Transport - Dedicated - DS1 combination - per mile per month			UNC1X	1L5XX	0.2652										
		Interoffice Transport - Dedicated - DS1 combination - Facility Termination per month			UNC1X	U1TF1	70.47	143.58	103.88								
		1/0 Channel System in combination - per month			UNC1X	MQ1	105.09	59.97	12.96								
		2-wire ISDN COCI (BRITE) - in combination - per month			UNCNX	UC1CA	2.96	5.91	4.26								
		Additional 2-wire ISDN Loop in same DS1Interoffice Transport Combination - Zone 1		1	UNCNX	U1L2X	22.09	94.21	45.09								
		Additional 2-wire ISDN Loop in same DS1Interoffice Transport Combination - Zone 2		2	UNCNX	U1L2X	35.28	94.21	45.09								
		Additional 2-wire ISDN Loop in same DS1Interoffice Transport Combination - Zone 3		3	UNCNX	U1L2X	65.18	94.21	45.09								
		Additional 2-wire ISDN COCI (BRITE) - in combination- per month			UNCNX	UC1CA	2.96	5.91	4.26								
		Nonrecurring Currently Combined Network Elements Switch -As-Is Charge			UNC1X	UNCCC		5.43	5.43								
	EXTENDED 4-WIRE DS1 DIGITAL EXTENDED LOOP WITH DEDICATED STS-1 INTEROFFICE TRANSPORT																
		First DS1 Loop Combination - Zone 1		1	UNC1X	USLXX	85.70	169.22	100.89								
		First DS1 Loop Combination - Zone 2		2	UNC1X	USLXX	194.96	169.22	100.89								

UNBUNDLED NETWORK ELEMENTS - Louisiana														Attachment: 2		Exhibit: A	
CATEGORY		RATE ELEMENTS	Interim	Zone	BCS	USOC	RATES ($)					Svc Order Submitted Elec per LSR	Svc Order Submitted Manually per LSR	Incremental Charge - Manual Svc Order vs. Electronic-1st	Incremental Charge - Manual Svc Order vs. Electronic-Add'l	Incremental Charge - Manual Svc Order vs. Electronic-Disc 1st	Incremental Charge - Manual Svc Order vs. Electronic-Disc Add'l
							Rec	Nonrecurring		Nonrecurring Disconnect		OSS Rates ($)					
								First	Add'l	First	Add'l	SOMEC	SOMAN	SOMAN	SOMAN	SOMAN	SOMAN
		First DS1 Loop Combination - Zone 3		3	UNC1X	USLXX	491.94	169.22	100.89								
		Interoffice Transport - Dedicated - STS-1 combination - Per Mile Per Month			UNCSX	1L5XX	6.04										
		Interoffice Transport - Dedicated - STS-1 combination - Facility Termination per month			UNCSX	U1TFS	830.19	296.68	121.16								
		3/1 Channel System in combination per month			UNCSX	MQ3	201.48	107.05	91.25								
		DS1 COCI in combination per month			UNC1X	UC1D1	11.78	5.91	4.26								
		Additional DS1Loop in the same STS-1 Interoffice Transport Combination - Zone 1		1	UNC1X	USLXX	85.70	169.22	100.89								
		Additional DS1Loop in the same STS-1 Interoffice Transport Combination - Zone 2		2	UNC1X	USLXX	194.96	169.22	100.89								
		Additional DS1Loop in the same STS-1 Interoffice Transport Combination - Zone 3		3	UNC1X	USLXX	491.94	169.22	100.89								
		DS1 COCI in combination per month			UNC1X	UC1D1	11.78	5.91	4.26								
		Nonrecurring Currently Combined Network Elements Switch -As-Is Charge			UNCSX	UNCCC		5.43	5.43								
	EXTENDED 4-WIRE 56 KBPS DIGITAL EXTENDED LOOP WITH 56 KBPS INTEROFFICE TRANSPORT																
		4-wire 56 kbps Local Loop in combination - Zone 1		1	UNCDX	UDL56	30.99	94.21	45.09								
		4-wire 56 kbps Local Loop in combination - Zone 2		2	UNCDX	UDL56	36.78	94.21	45.09								
		4-wire 56 kbps Local Loop in combination - Zone 3		3	UNCDX	UDL56	38.92	94.21	45.09								
		Interoffice Transport - Dedicated - 4-wire 56 kbps combination - Per Mile per month			UNCDX	1L5XX	0.013										
		Interoffice Transport - Dedicated - 4-wire 56 kbps combination - Facility Termination per month			UNCDX	U1TD5	15.61	72.60	41.75								
		Nonrecurring Currently Combined Network Elements Switch -As-Is Charge			UNCDX	UNCCC		5.43	5.43								
	EXTENDED 4-WIRE 64 KBPS DIGITAL EXTENDED LOOP WITH 64 KBPS INTEROFFICE TRANSPORT																
		4-wire 64 kbps Lcoal Loop in Combination - Zone 1		1	UNCDX	UDL64	30.99	94.21	45.09								
		4-wire 64 kbps Lcoal Loop in Combination - Zone 2		2	UNCDX	UDL64	36.78	94.21	45.09								
		4-wire 64 kbps Lcoal Loop in Combination - Zone 3		3	UNCDX	UDL64	38.92	94.21	45.09								
		Interoffice Transport - Dedicated - 4-wire 64 kbps combination - Per Mile per month			UNCDX	1L5XX	0.013										
		Interoffice Transport - Dedicated - 4-wire 64 kbps combination - Facility Termination per month			UNCDX	U1TD6	15.61	72.60	41.75								
		Nonrecurring Currently Combined Network Elements Switch -As-Is Charge			UNCDX	UNCCC		5.43	5.43								
	EXTENDED 2-WIRE VOICE GRADE LOOP WITH DS1 INTEROFFICE TRANSPORT w/ 3/1 MUX																
		First 2-wire VG Loop (SL2) in Combination - Zone 1		1	UNCVX	UEAL2	14.93	94.21	45.09								
		First 2-wire VG Loop (SL2) in Combination - Zone 2		2	UNCVX	UEAL2	25.35	94.21	45.09								
		First 2-wire VG Loop (SL2) in Combination - Zone 3		3	UNCVX	UEAL2	50.46	94.21	45.09								
		First Interoffice Transport - Dedicated - DS1 combination - Per Mile			UNC1X	1L5XX	0.2652										
		First Interoffice Transport - Dedicated - DS1 combination - Facility Termination per month			UNC1X	U1TF1	70.47	143.58	103.88								
		Per each DS1 Channelization System Per Month			UNC1X	MQ1	105.09	59.97	12.96								
		Per each Voice Grade COCI - Per Month per month			UNCVX	1D1VG	0.6497	5.91	4.26								
		3/1 Channel System in combination per month			UNC3X	MQ3	201.48	107.05	91.25								
		Per each DS1 COCI in combination per month			UNC1X	UC1D1	11.78	5.91	4.26								
		Each Additional 2-Wire VG Loop(SL 2) in the same DS1 Interoffice Transport Combination - Zone 1		1	UNCVX	UEAL2	14.93	94.21	45.09								
		Each Additional 2-Wire VG Loop(SL2) in the same DS1 Interoffice Transport Combination - Zone 2		2	UNCVX	UEAL2	25.35	94.21	45.09								
		Each Additional 2-Wire VG Loop(SL2) in the same DS1 Interoffice Transport Combination - Zone 3		3	UNCVX	UEAL2	50.46	94.21	45.09								
		Each Additional Voice Grade COCI in combination - per month			UNCVX	1D1VG	0.6497	5.91	4.26								
		Each Additional DS1 Interoffice Channel per mile in same 3/1 Channel System per month			UNC1X	1L5XX	0.2652										
		Each Additional DS1 Interoffice Channel Facility Termination in same 3/1 Channel System per month			UNC1X	U1TF1	70.47	143.58	103.88								

UNBUNDLED NETWORK ELEMENTS - Louisiana														Attachment: 2		Exhibit: A	
CATEGORY		RATE ELEMENTS	Interim	Zone	BCS	USOC	RATES ($)					Svc Order Submitted Elec per LSR	Svc Order Submitted Manually per LSR	Incremental Charge - Manual Svc Order vs. Electronic-1st	Incremental Charge - Manual Svc Order vs. Electronic-Add'l	Incremental Charge - Manual Svc Order vs. Electronic-Disc 1st	Incremental Charge - Manual Svc Order vs. Electronic-Disc Add'l
							Rec	Nonrecurring		Nonrecurring Disconnect		OSS Rates ($)					
								First	Add'l	First	Add'l	SOMEC	SOMAN	SOMAN	SOMAN	SOMAN	SOMAN
		Each Additional DS1 COCI combination per month			UNC1X	UC1D1	11.78	5.91	4.26								
		Nonrecurring Currently Combined Network Elements Switch -As-Is Charge			UNC1X	UNCCC		5.43	5.43								
	EXTENDED 4-WIRE VOICE GRADE LOOP WITH DEDICATED DS1 INTEROFFICE TRANSPORT w/ 3/1 MUX																
		First 4-Wire Analog Voice Grade Local Loop in Combination - Zone 1		1	UNCVX	UEAL4	30.81	94.21	45.09								
		First 4-Wire Analog Voice Grade Local Loop in Combination - Zone 2		2	UNCVX	UEAL4	38.32	94.21	45.09								
		First 4-Wire Analog Voice Grade Local Loop in Combination - Zone 3		3	UNCVX	UEAL4	60.39	94.21	45.09								
		First Interoffice Transport - Dedicated - DS1 combination - Per Mile Per Month			UNC1X	1L5XX	0.2652										
		First Interoffice Transport - Dedicated - DS1 - Facility Termination Per Month			UNC1X	U1TF1	70.47	143.58	103.88								
		Per each 1/0 Channel System in combination Per Month			UNC1X	MQ1	105.09	59.97	12.96								
		Per each Voice Grade COCI in combination - per month			UNCVX	1D1VG	0.6497	5.91	4.26								
		3/1 Channel System in combination per month			UNC3X	MQ3	201.48	107.05	91.25								
		Per each DS1 COCI in combination per month			UNC1X	UC1D1	11.78	5.91	4.26								
		Additional 4-Wire Analog Voice Grade Loop in same DS1 Interoffice Transport Combination - Zone 1		1	UNCVX	UEAL4	30.81	94.21	45.09								
		Additional 4-Wire Analog Voice Grade Loop in same DS1 Interoffice Transport Combination - Zone 2		2	UNCVX	UEAL4	38.32	94.21	45.09								
		Additional 4-Wire Analog Voice Grade Loop in same DS1 Interoffice Transport Combination - Zone 3		3	UNCVX	UEAL4	60.39	94.21	45.09								
		Each Additional DS1 Interoffice Channel per mile in same 3/1 Channel System per month			UNC1X	1L5XX	0.2652										
		Each Additional DS1 Interoffice Channel Facility Termination in same 3/1 Channel System per month			UNC1X	U1TF1	70.47	143.58	103.88								
		Additional Voice Grade COCI - in combination - per month			UNCVX	1D1VG	0.6497	5.91	4.26								
		Nonrecurring Currently Combined Network Elements Switch -As-Is Charge			UNC1X	UNCCC		5.43	5.43								
	EXTENDED 4-WIRE 56 KBPS DIGITAL LOOP WITH DEDICATED DS1 INTEROFFICE TRANSPORT w/ 3/1 MUX																
		First 4-Wire 56Kbps Digital Grade Local Loop in Combination - Zone 1		1	UNCDX	UDL56	30.99	94.21	45.09								
		First 4-Wire 56Kbps Digital Grade Local Loop in Combination - Zone 2		2	UNCDX	UDL56	36.78	94.21	45.09								
		First 4-Wire 56Kbps Digital Grade Local Loop in Combination - Zone 3		3	UNCDX	UDL56	38.92	94.21	45.09								
		First Interoffice Transport - Dedicated - DS1 combination - Per Mile Per Month			UNC1X	1L5XX	0.2652										
		First Interoffice Transport - Dedicated - DS1 - combination Facility Termination Per Month			UNC1X	U1TF1	70.47	143.58	103.88								
		Per each 1/0 Channel System in combination Per Month			UNC1X	MQ1	105.09	59.97	12.96								
		Per each OCU-DP COCI (data) COCI per month (2.4-64kbs)			UNCDX	1D1DD	1.38	5.91	4.26								
		3/1 Channel System in combination per month			UNC3X	MQ3	201.48	107.05	91.25								
		Per each DS1 COCI in combination per month			UNC1X	UC1D1	11.78	5.91	4.26								
		Additional 4-Wire 56Kbps Digital Grade Loop in same DS1 Interoffice Transport Combination - Zone 1		1	UNCDX	UDL56	30.99	94.21	45.09								
		Additional 4-Wire 56Kbps Digital Grade Loop in same DS1 Interoffice Transport Combination - Zone 2		2	UNCDX	UDL56	36.78	94.21	45.09								
		Additional 4-Wire 56Kbps Digital Grade Loop in same DS1 Interoffice Transport Combination - Zone 3		3	UNCDX	UDL56	38.92	94.21	45.09								
		OCU-DP COCI (data) COCI in combination per month (2.4-64kbs)			UNCDX	1D1DD	1.38	5.91	4.26								
		Each Additional DS1 Interoffice Channel per mile in same 3/1 Channel System per month			UNC1X	1L5XX	0.2652										
		Each Additional DS1 Interoffice Channel Facility Termination in same 3/1 Channel System per month			UNC1X	U1TF1	70.47	143.58	103.88								

UNBUNDLED NETWORK ELEMENTS - Louisiana														Attachment: 2		Exhibit: A	
CATEGORY		RATE ELEMENTS	Interim	Zone	BCS	USOC	RATES ($)					Svc Order Submitted Elec per LSR	Svc Order Submitted Manually per LSR	Incremental Charge - Manual Svc Order vs. Electronic-1st	Incremental Charge - Manual Svc Order vs. Electronic-Add'l	Incremental Charge - Manual Svc Order vs. Electronic-Disc 1st	Incremental Charge - Manual Svc Order vs. Electronic-Disc Add'l
							Rec	Nonrecurring		Nonrecurring Disconnect		OSS Rates ($)					
								First	Add'l	First	Add'l	SOMEC	SOMAN	SOMAN	SOMAN	SOMAN	SOMAN
		Each Additional DS1 COCI in the same 3/1 channel system combination per month			UNC1X	UC1D1	11.78	5.91	4.26								
		Nonrecurring Currently Combined Network Elements Switch -As-Is Charge			UNC1X	UNCCC		5.43	5.43								
	EXTENDED 4-WIRE 64 KBPS DIGITAL LOOP WITH DEDICATED DS1 INTEROFFICE TRANSPORT w/ 3/1 MUX																
		First 4-Wire 64Kbps Digital Grade Loop in a DS1 Interoffice Transport Combination - Zone 1		1	UNCDX	UDL64	30.99	94.21	45.09								
		First 4-Wire 64Kbps Digital Grade Loop in a DS1 Interoffice Transport Combination - Zone 2		2	UNCDX	UDL64	36.78	94.21	45.09								
		First 4-Wire 64Kbps Digital Grade Loop in a DS1 Interoffice Transport Combination - Zone 3		3	UNCDX	UDL64	38.92	94.21	45.09								
		First Interoffice Transport - Dedicated - DS1 combination - Per Mile Per Month			UNC1X	1L5XX	0.2652										
		First Interoffice Transport - Dedicated - DS1 combination - Facility Termination Per Month			UNC1X	U1TF1	70.47	143.58	103.88								
		Per each Channel System 1/0 in combination Per Month			UNC1X	MQ1	105.09	59.97	12.96								
		Per each OCU-DP COCI (data) in combination - per month (2.4-64kbs)			UNCDX	1D1DD	1.38	5.91	4.26								
		3/1 Channel System in combination per month			UNC3X	MQ3	201.48	107.05	91.25								
		Per each DS1 COCI in combination per month			UNC1X	UC1D1	11.78	5.91	4.26								
		Additional 4-Wire 64Kbps Digital Grade Loop in same DS1 Interoffice Transport Combination - Zone 1		1	UNCDX	UDL64	30.99	94.21	45.09								
		Additional 4-Wire 64Kbps Digital Grade Loop in same DS1 Interoffice Transport Combination - Zone 2		2	UNCDX	UDL64	36.78	94.21	45.09								
		Additional 4-Wire 64Kbps Digital Grade Loop in same DS1 Interoffice Transport Combination - Zone 3		3	UNCDX	UDL64	38.92	94.21	45.09								
		Additional OCU-DP COCI (data) - DS1 to DS0 Channel System combination - per month (2.4-64kbs)			UNCDX	1D1DD	1.38	5.91	4.26								
		Each Additional DS1 Interoffice Channel per mile in same 3/1 Channel System per month			UNC1X	1L5XX	0.2652										
		Each Additional DS1 Interoffice Channel Facility Termination in same 3/1 Channel System per month			UNC1X	U1TF1	70.47	143.58	103.88								
		Each Additional DS1 COCI in the same 3/1 channel system combination per month			UNC1X	UC1D1	11.78	5.91	4.26								
		Nonrecurring Currently Combined Network Elements Switch -As-Is Charge			UNC1X	UNCCC		5.43	5.43								
	EXTENDED 2-WIRE ISDN LOOP WITH DS1 INTEROFFICE TRANSPORT w/ 3/1 MUX																
		First 2-Wire ISDN Loop in a DS1 Interoffice Combination Transport - Zone 1		1	UNCNX	U1L2X	22.09	94.21	45.09								
		First 2-Wire ISDN Loop in a DS1 Interoffice Combination Transport - Zone 2		2	UNCNX	U1L2X	35.28	94.21	45.09								
		First 2-Wire ISDN Loop in a DS1 Interoffice Combination Transport - Zone 3		3	UNCNX	U1L2X	65.18	94.21	45.09								
		First Interoffice Transport - Dedicated - DS1 combination - Per Mile per month			UNC1X	1L5XX	0.2652										
		First Interoffice Transport - Dedicated - DS1 combination - Facility Termination per month			UNC1X	U1TF1	70.47	143.58	103.88								
		Per each Channel System 1/0 in combination - per month			UNC1X	MQ1	105.09	59.97	12.96								
		Per each 2-wire ISDN COCI (BRITE) in combination - per month			UNCNX	UC1CA	2.96	5.91	4.26								
		3/1 Channel System in combination per month			UNC3X	MQ3	201.48	107.05	91.25								
		Per each DS1 COCI in combination per month			UNC1X	UC1D1	11.78	5.91	4.26								
		Additional 2-wire ISDN Loop in same DS1Interoffice Transport Combination - Zone 1		1	UNCNX	U1L2X	22.09	94.21	45.09								
		Additional 2-wire ISDN Loop in same DS1Interoffice Transport Combination - Zone 2		2	UNCNX	U1L2X	35.28	94.21	45.09								
		Additional 2-wire ISDN Loop in same DS1Interoffice Transport Combination - Zone 3		3	UNCNX	U1L2X	65.18	94.21	45.09								

UNBUNDLED NETWORK ELEMENTS - Louisiana														Attachment: 2		Exhibit: A	
CATEGORY		RATE ELEMENTS	Interim	Zone	BCS	USOC	RATES ($)					Svc Order Submitted Elec per LSR	Svc Order Submitted Manually per LSR	Incremental Charge - Manual Svc Order vs. Electronic-1st	Incremental Charge - Manual Svc Order vs. Electronic-Add'l	Incremental Charge - Manual Svc Order vs. Electronic-Disc 1st	Incremental Charge - Manual Svc Order vs. Electronic-Disc Add'l
							Rec	Nonrecurring		Nonrecurring Disconnect		OSS Rates ($)					
								First	Add'l	First	Add'l	SOMEC	SOMAN	SOMAN	SOMAN	SOMAN	SOMAN
		Additional 2-wire ISDN COCI (BRITE) in same 1/0 channel system combination- per month			UNCNX	UC1CA	2.96	5.91	4.26								
		Each Additional DS1 Interoffice Channel per mile in same 3/1 Channel System per month			UNC1X	1L5XX	0.2652										
		Each Additional DS1 Interoffice Channel Facility Termination in same 3/1 Channel System per month			UNC1X	U1TF1	70.47	143.58	103.88								
		Each Additional DS1 COCI in the same 3/1 channel system combination per month			UNC1X	UC1D1	11.78	5.91	4.26								
		Nonrecurring Currently Combined Network Elements Switch -As-Is Charge			UNC1X	UNCCC		5.43	5.43								
	EXTENDED 4-WIRE DS1 LOOP WITH DEDICATED DS1 INTEROFFICE TRANSPORT w/ 3/1 MUX																
		First 4-wire DS1 Digital Lcoal Loop in Combination - Zone 1		1	UNC1X	USLXX	85.70	169.22	100.89								
		First 4-wire DS1 Digital Lcoal Loop in Combination - Zone 2		2	UNC1X	USLXX	194.96	169.22	100.89								
		First 4-wire DS1 Digital Lcoal Loop in Combination - Zone 3		3	UNC1X	USLXX	491.94	169.22	100.89								
		First Interoffice Transport - Dedicated - DS1 combination - Per Mile Per Month			UNC1X	1L5XX	0.2652										
		First Interoffice Transport - Dedicated - DS1 combination - Facility Termination Per Month			UNC1X	U1TF1	70.47	143.58	103.88								
		3/1 Channel System in combination per month			UNC3X	MQ3	201.48	107.05	91.25								
		Per each DS1 COCI combination per month			UNC1X	UC1D1	11.78	5.91	4.26								
		Each Additional DS1 Interoffice Channel per mile in same 3/1 Channel System per month			UNC1X	1L5XX	0.2652										
		Each Additional DS1 Interoffice Channel Facility Termination in same 3/1 Channel System per month			UNC1X	U1TF1	70.47	143.58	103.88								
		Each Additional DS1 COCI in the same 3/1 channel system combination per month			UNC1X	UC1D1	11.78	5.91	4.26								
		Additional 4-Wire DS1 Digital Local Loop in Combination - Zone 1		1	UNC1X	USLXX	85.70	169.22	100.89								
		Additional 4-Wire DS1 Digital Local Loop in Combination - Zone 2		2	UNC1X	USLXX	194.96	169.22	100.89								
		Additional 4-Wire DS1 Digital Local Loop in Combination - Zone 3		3	UNC1X	USLXX	491.94	169.22	100.89								
		Nonrecurring Currently Combined Network Elements Switch -As-Is Charge			UNC1X	UNCCC		5.43	5.43								
	EXTENDED 4-WIRE 56 KBPS DIGITAL EXTENDED LOOP WITH DS0 INTEROFFICE TRANSPORT																
		First 4-wire 56 kbps Local Loop in combination - Zone 1		1	UNCDX	UDL56	30.99	94.21	45.09								
		First 4-wire 56 kbps Local Loop in combination - Zone 2		2	UNCDX	UDL56	36.78	94.21	45.09								
		First 4-wire 56 kbps Local Loop in combination - Zone 3		3	UNCDX	UDL56	38.92	94.21	45.09								
		First 4-wiree 56 kbps Interoffice Transport - Dedicated - Per Mile per month			UNCDX	1L5XX	0.013										
		First 4-wire 56 kbps Interoffice Transport - Dedicated - Facility Termination per month			UNCDX	U1TD5	15.61	72.60	41.75								
		Nonrecurring Currently Combined Network Elements Switch -As-Is Charge			UNCDX	UNCCC		5.43	5.43								
	EXTENDED 4-WIRE 64 KBPS DIGITAL EXTENDED LOOP WITH DS0 INTEROFFICE TRANSPORT																
		First 4-wire 64 kbps Local Loop in combination - Zone 1		1	UNCDX	UDL64	30.99	94.21	45.09								
		First 4-wire 64 kbps Local Loop in combination - Zone 2		2	UNCDX	UDL64	36.78	94.21	45.09								
		First 4-wire 64 kbps Local Loop in combination - Zone 3		3	UNCDX	UDL64	38.92	94.21	45.09								
		First l4-wire 65 kbps Interoffice Transport - Dedicated - Per Mile per month			UNCDX	1L5XX	0.013										
		First 4-wire 64 kbps Interoffice Transport - Dedicated - Facility Termination per month			UNCDX	U1TD6	15.61	72.60	41.75								
		Nonrecurring Currently Combined Network Elements Switch -As-Is Charge			UNCDX	UNCCC		5.43	5.43								
ADDITIONAL NETWORK ELEMENTS																	
	When used as a part of a currently combined facility, the non-recurrng charges do not apply, but a Switch As Is charge does apply.																
	When used as ordinarily combined network elements in All States, the non-recurring charges apply and the Switch As Is Charge does not.																
	Nonrecurring Currently Combined Network Elements "Switch As Is" Charge (One applies to each combination)																

UNBUNDLED NETWORK ELEMENTS - Louisiana														Attachment: 2		Exhibit: A	
CATEGORY		RATE ELEMENTS	Interim	Zone	BCS	USOC	RATES ($)					Svc Order Submitted Elec per LSR	Svc Order Submitted Manually per LSR	Incremental Charge - Manual Svc Order vs. Electronic-1st	Incremental Charge - Manual Svc Order vs. Electronic-Add'l	Incremental Charge - Manual Svc Order vs. Electronic-Disc 1st	Incremental Charge - Manual Svc Order vs. Electronic-Disc Add'l
							Rec	Nonrecurring		Nonrecurring Disconnect		OSS Rates ($)					
								First	Add'l	First	Add'l	SOMEC	SOMAN	SOMAN	SOMAN	SOMAN	SOMAN
		Nonrecurring Currently Combined Network Elements Switch -As-Is Charge - 2 wire/4-Wire VG			UNCVX	UNCCC		5.43	5.43								
		Nonrecurring Currently Combined Network Elements Switch -As-Is Charge - 56/64 kbps			UNCDX	UNCCC		5.43	5.43								
		Nonrecurring Currently Combined Network Elements Switch -As-Is Charge - DS1			UNC1X	UNCCC		5.43	5.43								
		Nonrecurring Currently Combined Network Elements Switch -As-Is Charge - DS3			UNC3X	UNCCC		5.43	5.43								
		Nonrecurring Currently Combined Network Elements Switch -As-Is Charge - STS1			UNCSX	UNCCC		5.43	5.43								
	Optional Features & Functions:																
		Clear Channel Capability Extended Frame Option - per DS1	I		U1TD1, ULDD1,UNC1X	CCOEF		0I	0I	0I	0I						
		Clear Channel Capability Super FrameOption - per DS1	I		U1TD1, ULDD1,UNC1X	CCOSF		0I	0I	0I	0I						
		Clear Channel Capability (SF/ESF) Option - Subsequent Activity - per DS1	I		ULDD1, U1TD1, UNC1X, USL	NRCCC		184.65S	23.79S	1.97S	0.77S						
		C-bit Parity Option - Subsequent Activity - per DS3	i		U1TD3, ULDD3, UE3, UNC3X	NRCC3		218.78S	7.66S	.7263S	0S						
	MULTIPLEXERS																
		DS1 to DS0 Channel System per month			UNC1X	MQ1	105.09	59.97	12.96								
		OCU-DP COCI (data) - DS1 to DS0 Channel System - per month (2.4-64kbs) used for a Local Loop			UDL	1D1DD	1.38	6.39	4.58								
		OCU-DP COCI (data) - DS1 to DS0 Channel System - per month (2.4-64kbs) used for connection to a channelized DS1 Local Channel in the same SWC as collocation			U1TUD	1D1DD	1.38	6.39	4.58								
		2-wire ISDN COCI (BRITE) - DS1 to DS0 Channel Systsem - per month for a Local Loop			UDN	UC1CA	2.96	6.39	4.58								
		2-wire ISDN COCI (BRITE) - DS1 to DS0 Channel Systsem - per month used for connection to a channelized DS1 Local Channel in the same SWC as collocation			U1TUB	UC1CA	2.96	6.39	4.58								
		Voice Grade COCI - DS1 to DS0 Channel System - per month used for a Local Loop			UEA	1D1VG	0.6497	6.39	4.58								
		Voice Grade COCI - DS1 to DS0 Channel System - per month used for connection to a channelized DS1 Local Channel in the same SWC as collocation			U1TUC	1D1VG	0.6497	6.39	4.58								
		DS3 to DS1 Channel System per month			UNC3X	MQ3	201.48	107.05	91.25								
		STS-1 to DS1 Channel System per month			UNCSX	MQ3	201.48	107.05	91.25								
		DS1 COCI used with Loop per month			USL	UC1D1	11.78	6.39	4.58								
		DS1 COCI (used for connection to a channelized DS1 Local Channel in the same SWC as collocation) per month			U1TUA	UC1D1	11.78	6.39	4.58								
		DS1 COCI used with Interoffice Channel per month			U1TD1	UC1D1	11.78	6.39	4.58								
		DS3 Interface Unit (DS1 COCI) used with Local Channel per month			ULDD1	UC1D1	11.78	6.39	4.58								
UNBUNDLED LOCAL EXCHANGE SWITCHING(PORTS)																	
	Exchange Ports																
	NOTE: Although the Port Rate includes all available features in GA, KY, LA & TN, the desired features will need to be ordered using retail USOCs																
	2-WIRE VOICE GRADE LINE PORT RATES (RES)																
		Exchange Ports - 2-Wire Analog Line Port- Res.			UEPSR	UEPRL	1.52	2.31	2.21								
		Exchange Ports - 2-Wire Analog Line Port with Caller ID - Res.			UEPSR	UEPRC	1.52	2.31	2.21								
		Exchange Ports - 2-Wire Analog Line Port outgoing only - Res.			UEPSR	UEPRO	1.52	2.31	2.21								
		Exchange Ports - 2-Wire VG unbundled LA extended local dialing parity Port with Caller ID - Res.			UEPSR	UEPAS	1.52	2.31	2.21								
		Exchange Ports - 2-Wire VG unbundled Louisiana Area Plus with Caller ID - Res (RUL)			UEPSR	UEPAG	1.52	2.31	2.21								
		Exchange Ports - 2-Wire VG unbundled res, low usage line port with Caller ID (LUM)			UEPSR	UEPAP	1.52	2.31	2.21								

UNBUNDLED NETWORK ELEMENTS - Louisiana														Attachment: 2		Exhibit: A	
CATEGORY		RATE ELEMENTS	Interim	Zone	BCS	USOC	RATES ($)					Svc Order Submitted Elec per LSR	Svc Order Submitted Manually per LSR	Incremental Charge - Manual Svc Order vs. Electronic-1st	Incremental Charge - Manual Svc Order vs. Electronic-Add'l	Incremental Charge - Manual Svc Order vs. Electronic-Disc 1st	Incremental Charge - Manual Svc Order vs. Electronic-Disc Add'l
							Rec	Nonrecurring		Nonrecurring Disconnect		OSS Rates ($)					
								First	Add'l	First	Add'l	SOMEC	SOMAN	SOMAN	SOMAN	SOMAN	SOMAN
		Exchange Ports - 2-Wire VG Louisiana Residence Dialing Plan without Caller ID			UEPSR	UEPWG	1.52	2.31	2.21								
		Exchange Ports - 2-Wire VG Louisiana Residence Area Plus without Caller ID			UEPSR	UEPRQ	1.52	2.31	2.21								
		2-Wire voice unbundled Low Usage Line Port without Caller ID Capability			UEPSR	UEPRT	1.52	2.31	2.21								
		Subsequent Activity			UEPSR	USASC	0.00	0.00	0.00								
	FEATURES																
		All Available Vertical Features			UEPSR	UEPVF	0.00	0.00	0.00								
	2-WIRE VOICE GRADE LINE PORT RATES (BUS)																
		Exchange Ports - 2-Wire Analog Line Port without Caller ID - Bus			UEPSB	UEPBL	1.52	2.31	2.21								
		Exchange Ports - 2-Wire VG unbundled Line Port with unbundled port with Caller+E484 ID - Bus.			UEPSB	UEPBC	1.52	2.31	2.21								
		Exchange Ports - 2-Wire Analog Line Port outgoing only - Bus.			UEPSB	UEPBO	1.52	2.31	2.21								
		Exchange Ports - 2-Wire VG unbundled LA extended local dialing parity Port with Caller ID - Bus.			UEPSB	UEPAX	1.52	2.31	2.21								
		Exhange Ports - 2-Wire VG unbundled incoming only port with Caller ID - Bus			UEPSB	UEPB1	1.52	2.31	2.21								
		Exchange Ports - 2-Wire VG unbundled Louisiana Bus Area Calling Port with Caller ID - Bus (BUC)			UEPSB	UEPAA	1.52	2.31	2.21								
		Exchange Ports - 2-Wire Voice Louisiana Business Dialing Plan without Caller ID			UEPSB	UEPWH	1.52	2.31	2.21								
		Exchange Ports - 2-Wire Voice Louisiana Business Area Calling Port without Caller ID			UEPSB	UEPBA	1.52	2.31	2.21								
		2-Wire voice unbundled Incoming Only Port without Caller ID Capability			UEPSB	UEPBE	1.52	2.31	2.21								
		Subsequent Activity			UEPSB	USASC	0.00	0.00	0.00								
	FEATURES																
		All Available Vertical Features			UEPSB	UEPVF	0.00	0.00	0.00								
	EXCHANGE PORT RATES (DID & PBX)																
		2-Wire VG Unbundled 2-Way PBX Trunk - Res			UEPSE	UEPRD	1.52	30.37	14.42								
		2-Wire VG Line Side Unbundled 2-Way PBX Trunk - Bus			UEPSP	UEPPC	1.52	30.37	14.42								
		2-Wire VG Line Side Unbundled Outward PBX Trunk - Bus			UEPSP	UEPPO	1.52	30.37	14.42								
		2-Wire VG Line Side Unbundled Incoming PBX Trunk - Bus			UEPSP	UEPP1	1.52	30.37	14.42								
		2-Wire Analog Long Distance Terminal PBX Trunk - Bus			UEPSP	UEPLD	1.52	30.37	14.42								
		2-Wire Voice Unbundled 2-Way PBX Louisiana Calling Port			UEPSP	UEPL2	1.52	30.37	14.42								
		2-Wire Voice Unbundled PBX LD Terminal Ports			UEPSP	UEPLD	1.52	30.37	14.42								
		2-Wire Vice Unbundled 2-Way PBX Usage Port			UEPSP	UEPXA	1.52	30.37	14.42								
		2-Wire Voice Unbundled PBX Toll Terminal Hotel Ports			UEPSP	UEPXB	1.52	30.37	14.42								
		2-Wire Voice Unbundled PBX LD DDD Terminals Port			UEPSP	UEPXC	1.52	30.37	14.42								
		2-Wire Voice Unbundled PBX LD Terminal Switchboard Port			UEPSP	UEPXD	1.52	30.37	14.42								
		2-Wire Voice Unbundled PBX LD Terminal Switchboard IDD Capable Port			UEPSP	UEPXE	1.52	30.37	14.42								
		2-Wire Voice Unbundled 2-Way PBX Louisiana Local Optional Callling Port			UEPSP	UEPXK	1.52	30.37	14.42								
		2-Wire Voice Unbundled 2-Way PBX Hotel/Hospital Economy Administrative Calling Port			UEPSP	UEPXL	1.52	30.37	14.42								
		2-Wire Voice Unbundled 2-Way PBX Hotel/Hospital Economy Room Calling Port			UEPSP	UEPXM	1.52	30.37	14.42								
		2-Wire Voice Unbundled 1-Way Outgoing PBX Hotel/Hospital Discount Room Calling Port			UEPSP	UEPXO	1.52	30.37	14.42								
		2-Wire Voice Unbundled 1-Way Outgoing PBX Louisiana Local Discount Calling Port			UEPSP	UEPXP	1.52	30.37	14.42								
		2-Wire Voice Unbundled 1-Way Outgoing PBX Measured Port			UEPSP	UEPXS	1.52	30.37	14.42								
		Subsequent Activity			UEPSP	USASC	0.00	0.00	0.00								
	FEATURES																
		All Available Vertical Features			UEPSP UEPSE	UEPVF	0.00	0.00	0.00								

UNBUNDLED NETWORK ELEMENTS - Louisiana														Attachment: 2		Exhibit: A	
CATEGORY	RATE ELEMENTS	Interim	Zone	BCS	USOC	RATES ($)					Svc Order Submitted Elec per LSR	Svc Order Submitted Manually per LSR	Incremental Charge - Manual Svc Order vs. Electronic-1st	Incremental Charge - Manual Svc Order vs. Electronic-Add'l	Incremental Charge - Manual Svc Order vs. Electronic-Disc 1st	Incremental Charge - Manual Svc Order vs. Electronic-Disc Add'l
						Rec	Nonrecurring		Nonrecurring Disconnect		OSS Rates ($)					
							First	Add'l	First	Add'l	SOMEC	SOMAN	SOMAN	SOMAN	SOMAN	SOMAN
	EXCHANGE PORT RATES (COIN)															
	Exchange Ports - Coin Port					1.52	2.31	2.21								
	NOTE: Transmission/usage charges associated with POTS circuit switched usage will also apply to circuit switched voice and/or circuit switched data transmission by B-Channels associated with 2-wire ISDN ports.															
	NOTE: Access to B Channel or D Channel Packet capabilities will be available only through BFR/New Business Request Process. Rates for the packet capabilities will be determined via the Bona Fide Request/New Business Request Process.															
UNBUNDLED LOCAL EXCHANGE SWITCHING(PORTS)																
	EXCHANGE PORT RATES															
	The DS1 Port rates below for 4-Wire DDITS Trunk Port and 4-Wire ISDN Port in this rate exhibit apply to the embedded base in place as of 10/2/03 until 4/1/04. After 4/1/04 these rates shall revert to tariff rates or a separate agreement.															
	Requests for 4-Wire DDITS Trunk Ports with 4-Wire ISDN DS1 Ports after the effective date of this amendment shall be provided pursuant to a separate agreement or tariff at BellSouth's discretion.															
	Exchange Ports - 2-Wire DID Port			UEPEX	UEPP2	8.29	115.85	18.20								
	Exchange Ports - DDITS Port - 4-Wire DS1 Port with DID capability (E:4/1/2004)			UEPDD	UEPDD	68.47	196.18	92.92								
	Exchange Ports - 2-Wire ISDN Port (See Notes below.)			UEPTX, UEPSX	U1PMA	10.07	70.76	51.46								
	All Features Offered			UEPTX, UEPSX	UEPVF	0.00	0.00	0.00								
	Exchange Ports - 2-Wire ISDN Port -- Channel Profiles			UEPTX, UEPSX	U1UMA	0.00	0.00	0.00								
	NOTE: Transmission/usage charges associated with POTS circuit switched usage will also apply to circuit switched voice and/or circuit switched data transmission by B-Channels associated with 2-wire ISDN ports.															
	NOTE: Access to B Channel or D Channel Packet capabilities will be available only through BFR/New Business Request Process. Rates for the packet capabilities will be determined via the Bona Fide Request/New Business Request Process.															
	EXCHANGE PORT RATES (continued)															
	Exchange Ports - 4-Wire ISDN DS1 Port with Detailed E911 Locator Capability (E:4/1/2004)			UEPEX	UEPEX	94.82	197.92	98.62								
	Exchange Ports - 4-Wire ISDN DS1 Port (E:4/1/2004)			UEPDX	UEPDX	94.82	197.92	98.62								
	Physical Collocation - DS1 Cross-Connects			UEPEX UEPDX	PE1P1	1.04	21.39	15.47								
	Virtual collocation - Special Access & UNE, cross-connect per DS1			UEPEX UEPDX	CNC1X	1.04	21.39	15.47								
	Detailed E911 with Locator Capability (required with UEPEX port)															
	Unbundled Exchange Ports, 4-Wire ISDN DS1 Port - E911 Locator Capability - Initial Profile Establishment per CLEC per State			UEPEX	UEP1A	0.00	1,792.00									
	Unbundled Exchange Ports, 4-Wire ISDN DS1 Port - E911 Locator Capability - Subsequent Profile Changes, Additions, Deletions			UEPEX	UEP1B	0.00	174.03									
	New or Additional PRI Telephone Numbers															
	Unbundled Exchange Ports, 4-Wire ISDN DS1 Port - E911 Locator Capability 2-way Telephone Numbers, per number in E911 profile [New or Additional]			UEPEX	UEP1C	0.0692	0.48									
	Unbundled Exchange Ports, 4-Wire ISDN DS1 Port - E911 Locator Capability - Outdial Telephone Numbers, per number in E911 profile [New or Additional]			UEPEX	UEP1D	0.0692	11.18	11.18								
	Unbundled Exchange Ports, 4-Wire ISDN DS1 Port - Inward Telephone Numbers - Inward Data Only Option [New or Additional]			UEPDX	UEP1E	0.00	0.48									
	Exchange Ports - 4-Wire ISDN DS1 Port - Subsequent [New] Inward Tel Numbers [Customer Testing Purposes]			UEPEX	PR7ZT	0.00	22.35	22.35								
	LOCAL NUMBER PORTABILITY															
	Local Number Portability (1 per port)			UEPEX UEPDX	LNPCN	1.75										
	INTERFACE (Provsioning Only)															
	Voice/Data			UEPEX	PR71V	0.00	0.00	0.00								
	Digital Data			UEPEX	PR71D	0.00	0.00	0.00								
	Inward Data			UEPDX	PR71E	0.00	0.00	0.00								
	New or Additional Channel															
	New or Additional - Voice/Data "B" Channel			UEPEX	PR7BV	0.00	14.11									
	New or Additional - Digital Data "B" Channel			UEPEX	PR7BF	0.00	14.11									
	New or Additional Inward Data "B" Channel			UEPDX	PR7BD	0.00	14.11									
	New or Additional Useage Sensitive Voice Data "B" Channel			UEPEX	PR7BS	0.00	14.11									
	New or Additional Useage Sensitive Digital Data "B" Channel			UEPEX	PR7BU	0.00	14.11									
	New or Additional PRI "D" Channel			UEPEX	PR7EX	0.00	14.11									
	CALL TYPES															
	Inward			UEPEX UEPDX	PR7C1	0.00	0.00	0.00								
	Outward			UEPEX	PR7CO	0.00	0.00	0.00								
	Two-way			UEPEX	PR7CC	0.00	0.00	0.00								

UNBUNDLED NETWORK ELEMENTS - Louisiana														Attachment: 2		Exhibit: A	
CATEGORY	RATE ELEMENTS	Interim	Zone	BCS	USOC	RATES ($)					Svc Order Submitted Elec per LSR	Svc Order Submitted Manually per LSR	Incremental Charge - Manual Svc Order vs. Electronic-1st	Incremental Charge - Manual Svc Order vs. Electronic-Add'l	Incremental Charge - Manual Svc Order vs. Electronic-Disc 1st	Incremental Charge - Manual Svc Order vs. Electronic-Disc Add'l
						Rec	Nonrecurring		Nonrecurring Disconnect		OSS Rates ($)					
							First	Add'l	First	Add'l	SOMEC	SOMAN	SOMAN	SOMAN	SOMAN	SOMAN
	UNBUNDLED PORT with REMOTE CALL FORWARDING CAPABILITY															
	UNBUNDLED REMOTE CALL FORWARDING SERVICE - RESIDENCE															
	Unbundled Remote Call Forwarding Service, Area Calling, Res			UEPVR	UERAC	1.52	2.31	2.21								
	Unbundled Remote Call Forwarding Service, Local Calling - Res			UEPVR	UERLC	1.52	2.31	2.21								
	Unbundled Remote Call Forwarding Service, InterLATA - Res			UEPVR	UERTE	1.52	2.31	2.21								
	Unbundled Remote Call Forwarding Service, IntraLATA - Res			UEPVR	UERTR	1.52	2.31	2.21								
	Non-Recurring															
	Unbundled Remote Call Forwarding Service - Conversion - Switch-as-is			UEPVR	USAC2		0.10	0.10								
	Unbundled Remote Call Forwarding Service - Conversion with allowed change (PIC and LPIC)			UEPVR	USACC		0.10	0.10								
	UNBUNDLED REMOTE CALL FORWARDING - Bus															
	Unbundled Remote Call Forwarding Service, Area Calling - Bus			UEPVB	UERAC	1.52	2.31	2.21								
	Unbundled Remote Call Forwarding Service, Local Calling - Bus			UEPVB	UERLC	1.52	2.31	2.21								
	Unbundled Remote Call Forwarding Service, InterLATA - Bus			UEPVB	UERTE	1.52	2.31	2.21								
	Unbundled Remote Call Forwarding Service, IntraLATA - Bus			UEPVB	UERTR	1.52	2.31	2.21								
	Unbundled Remote Call Forwarding Service Expanded and Exception Local Calling			UEPVB	UERVJ	1.52	2.31	2.21								
	Non-Recurring															
	Unbundled Remote Call Forwarding Service - Conversion - Switch-as-is			UEPVB	USAC2		0.10	0.10								
	Unbundled Remote Call Forwarding Service - Conversion with allowed change (PIC and LPIC)			UEPVB	USACC		0.10	0.10								
UNBUNDLED LOCAL SWITCHING, PORT USAGE																
	End Office Switching (Port Usage)															
	End Office Switching Function, Per MOU					0.001868										
	End Office Trunk Port - Shared, Per MOU					0.00018										
	Tandem Switching (Port Usage) (Local or Access Tandem)															
	Tandem Switching Function Per MOU					0.0001067										
	Tandem Trunk Port - Shared, Per MOU					0.000222										
	Tandem Switching Function Per MOU (Melded)					0.000035296										
	Tandem Trunk Port - Shared, Per MOU (Melded)					0.000073438										
	Melded Factor: 33.08% of the Tandem Rate															
	Common Transport															
	Common Transport - Per Mile, Per MOU					0.0000032										
	Common Transport - Facilities Termination Per MOU					0.0003748										
UNBUNDLED PORT/LOOP COMBINATIONS - COST BASED RATES																
	Cost Based Rates are applied where BellSouth is required by FCC and/or State Commission rule to provide Unbundled Local Switching or Switch Ports.															
	Features shall apply to the Unbundled Port/Loop Combination - Cost Based Rate section in the same manner as they are applied to the Stand-Alone Unbundled Port section of this Rate Exhibit.															
	End Office and Tandem Switching Usage and Common Transport Usage rates in the Port section of this rate exhibit shall apply to all combinations of loop/port network elements except for UNE Coin Port/Loop Combinations.															
	The first and additional Port nonrecurring charges apply to Not Currently Combined Combos. For Currently Combined Combos the nonrecurring charges shall be those identified in the Nonrecurring - Currently Combined sections.															
	2-WIRE VOICE GRADE LOOP WITH 2-WIRE LINE PORT (RES)															
	UNE Port/Loop Combination Rates															
	2-Wire VG Loop/Port Combo - Zone 1		1			13.13										
	2-Wire VG Loop/Port Combo - Zone 2		2			23.75										
	2-Wire VG Loop/Port Combo - Zone 3		3			49.62										
	UNE Loop Rates															
	2-Wire Voice Grade Loop (SL1) - Zone 1		1	UEPRX	UEPLX	11.77										
	2-Wire Voice Grade Loop (SL1) - Zone 2		2	UEPRX	UEPLX	22.39										
	2-Wire Voice Grade Loop (SL1) - Zone 3		3	UEPRX	UEPLX	48.26										
	2-Wire Voice Grade Line Port Rates (Res)															
	2-Wire voice unbundled port - residence			UEPRX	UEPRL	1.36	38.85	19.08								
	2-Wire voice unbundled port with Caller ID - res			UEPRX	UEPRC	1.36	38.85	19.08								
	2-Wire voice unbundled port outgoing only - res			UEPRX	UEPRO	1.36	38.85	19.08								
	2-Wire voice Grade unbundled Louisiana extended local dialing parity port with Caller ID - res			UEPRX	UEPAS	1.36	38.85	19.08								

UNBUNDLED NETWORK ELEMENTS - Louisiana														Attachment: 2		Exhibit: A	
CATEGORY		RATE ELEMENTS	Interim	Zone	BCS	USOC	RATES ($)					Svc Order Submitted Elec per LSR	Svc Order Submitted Manually per LSR	Incremental Charge - Manual Svc Order vs. Electronic-1st	Incremental Charge - Manual Svc Order vs. Electronic-Add'l	Incremental Charge - Manual Svc Order vs. Electronic-Disc 1st	Incremental Charge - Manual Svc Order vs. Electronic-Disc Add'l
							Rec	Nonrecurring		Nonrecurring Disconnect		OSS Rates ($)					
								First	Add'l	First	Add'l	SOMEC	SOMAN	SOMAN	SOMAN	SOMAN	SOMAN
		2-Wire voice unbundled Louisiana Area Plus with Caller ID - res (RUL)			UEPRX	UEPAG	1.36	38.85	19.08								
		2-Wire voice unbundles res, low usage line port with Caller ID (LUM)			UEPRX	UEPAP	1.36	38.85	19.08								
		2-Wire Voice Unbundled Louisiana Residence Dialing Plan without Caller ID			UEPRX	UEPWG	1.36	38.85	19.08								
		2-Wire voice unbundled Louisiana Area Plus Port without Caller ID Capability			UEPRX	UEPRQ	1.36	38.85	19.08								
		2-Wire voice unbundled Low Usage Line Port without Caller ID Capability			UEPRX	UEPRT	1.36	38.85	19.08								
	FEATURES																
		All Features Offered			UEPRX	UEPVF	0.00	0.00	0.00								
	LOCAL NUMBER PORTABILITY																
		Local Number Portability (1 per port)			UEPRX	LNPCX	0.35										
	NONRECURRING CHARGES (NRCs) - CURRENTLY COMBINED																
		2-Wire Voice Grade Loop / Line Port Combination - Conversion - Switch-as-is			UEPRX	USAC2		0.10	0.10								
		2-Wire Voice Grade Loop / Line Port Combination - Conversion - Switch with change			UEPRX	USACC		0.10	0.10								
	ADDITIONAL NRCs																
		2-Wire Voice Grade Loop/Line Port Combination - Subsequent Activity			UEPRX	USAS2	0.00	0.00	0.00								
		Unbundled Miscellaneous Rate Element, Tag Loop at End User Premise			UEPRX	URETL		8.33	0.83								
	OFF/ON PREMISES EXTENSION CHANNELS																
		2 Wire Analog Voice Grade Extension Loop – Non-Design		1	UEPRX	UEAEN	12.90	36.54	16.87								
		2 Wire Analog Voice Grade Extension Loop – Non-Design		2	UEPRX	UEAEN	23.33	36.54	16.87								
		2 Wire Analog Voice Grade Extension Loop – Non-Design		3	UEPRX	UEAEN	48.43	36.54	16.87								
		2 Wire Analog Voice Grade Extension Loop – Design		1	UEPRX	UEAED	14.93	102.10	65.72								
		2 Wire Analog Voice Grade Extension Loop – Design		2	UEPRX	UEAED	25.35	102.10	65.72								
		2 Wire Analog Voice Grade Extension Loop – Design		3	UEPRX	UEAED	50.46	102.10	65.72								
	INTEROFFICE TRANSPORT																
		Interoffice Transport - Dedicated - 2 Wire Voice Grade - Facility Termination			UEPRX	U1TV2	22.60	39.36	26.62								
		Interoffice Transport - Dedicated - 2 Wire Voice Grade - Per Mile or Fraction Mile			UEPRX	U1TVM	0.013	0.00	0.00								
	2-WIRE VOICE GRADE LOOP WITH 2-WIRE LINE PORT (BUS)																
	UNE Port/Loop Combination Rates																
		2-Wire VG Loop/Port Combo - Zone 1		1			13.13										
		2-Wire VG Loop/Port Combo - Zone 2		2			23.75										
		2-Wire VG Loop/Port Combo - Zone 3		3			49.62										
	UNE Loop Rates																
		2-Wire Voice Grade Loop (SL1) - Zone 1		1	UEPBX	UEPLX	11.77										
		2-Wire Voice Grade Loop (SL1) - Zone 2		2	UEPBX	UEPLX	22.39										
		2-Wire Voice Grade Loop (SL1) - Zone 3		3	UEPBX	UEPLX	48.26										
	2-Wire Voice Grade Line Port (Bus)																
		2-Wire voice unbundled port without Caller ID - bus			UEPBX	UEPBL	1.36	38.85	19.08								
		2-Wire voice unbundled port with Caller + E484 ID - bus			UEPBX	UEPBC	1.36	38.85	19.08								
		2-Wire voice unbundled port outgoing only - bus			UEPBX	UEPBO	1.36	38.85	19.08								
		2-Wire voice Grade unbundled Louisiana extended local dialing parity port with Caller ID - bus			UEPBX	UEPAX	1.36	38.85	19.08								
		2-Wire voice unbundled incoming only port with Caller ID - Bus			UEPBX	UEPB1	1.36	38.85	19.08								
		2-Wire voice unbundled Louisiana Bus Area Calling Port with Caller ID (BUC)			UEPBX	UEPAA	1.36	38.85	19.08								
		2-Wire Voice Unbundled Louisiana Business Dialing Plan without Caller ID			UEPBX	UEPWH	1.36	38.85	19.08								
		2-Wire voice unbundled Louisiana Business Area Calling Port without Caller ID Capability			UEPBX	UEPBA	1.36	38.85	19.08								

UNBUNDLED NETWORK ELEMENTS - Louisiana														Attachment: 2		Exhibit: A	
CATEGORY	RATE ELEMENTS	Interim	Zone	BCS	USOC	RATES ($)					Svc Order Submitted Elec per LSR	Svc Order Submitted Manually per LSR	Incremental Charge - Manual Svc Order vs. Electronic-1st	Incremental Charge - Manual Svc Order vs. Electronic-Add'l	Incremental Charge - Manual Svc Order vs. Electronic-Disc 1st	Incremental Charge - Manual Svc Order vs. Electronic-Disc Add'l
						Rec	Nonrecurring		Nonrecurring Disconnect		OSS Rates ($)					
							First	Add'l	First	Add'l	SOMEC	SOMAN	SOMAN	SOMAN	SOMAN	SOMAN
	2-Wire voice unbundled Incoming Only Port without Caller ID Capability			UEPBX	UEPBE	1.36	38.85	19.08								
	LOCAL NUMBER PORTABILITY															
	Local Number Portability (1 per port)			UEPBX	LNPCX	0.35										
	FEATURES															
	All Features Offered			UEPBX	UEPVF	0.00	0.00	0.00								
	NONRECURRING CHARGES (NRCs) - CURRENTLY COMBINED															
	2-Wire Voice Grade Loop / Line Port Combination - Conversion - Switch-as-is			UEPBX	USAC2		0.10	0.10								
	2-Wire Voice Grade Loop / Line Port Combination - Conversion - Switch with change			UEPBX	USACC		0.10	0.10								
	ADDITIONAL NRCs															
	2-Wire Voice Grade Loop/Line Port Combination - Subsequent Activity			UEPBX	USAS2		0.00	0.00								
	Unbundled Miscellaneous Rate Element, Tag Loop at End User Premise			UEPBX	URETL		8.33	0.83								
	OFF/ON PREMISES EXTENSION CHANNELS															
	2 Wire Analog Voice Grade Extension Loop – Non-Design		1	UEPBX	UEAEN	12.90	36.54	16.87								
	2 Wire Analog Voice Grade Extension Loop – Non-Design		2	UEPBX	UEAEN	23.33	36.54	16.87								
	2 Wire Analog Voice Grade Extension Loop – Non-Design		3	UEPBX	UEAEN	48.43	36.54	16.87								
	2 Wire Analog Voice Grade Extension Loop – Design		1	UEPBX	UEAED	14.93	102.10	65.72								
	2 Wire Analog Voice Grade Extension Loop – Design		2	UEPBX	UEAED	25.35	102.10	65.72								
	2 Wire Analog Voice Grade Extension Loop – Design		3	UEPBX	UEAED	50.46	102.10	65.72								
	INTEROFFICE TRANSPORT															
	Interoffice Transport - Dedicated - 2 Wire Voice Grade - Facility Termination			UEPBX	U1TV2	22.60	39.36	26.62								
	Interoffice Transport - Dedicated - 2 Wire Voice Grade - Per Mile or Fraction Mile			UEPBX	U1TVM	0.013	0.00	0.00								
	2-WIRE VOICE GRADE LOOP WITH 2-WIRE LINE PORT (RES - PBX)															
	UNE Port/Loop Combination Rates															
	2-Wire VG Loop/Port Combo - Zone 1		1			13.13										
	2-Wire VG Loop/Port Combo - Zone 2		2			23.75										
	2-Wire VG Loop/Port Combo - Zone 3		3			49.62										
	UNE Loop Rates															
	2-Wire Voice Grade Loop (SL 1) - Zone 1		1	UEPRG	UEPLX	11.77										
	2-Wire Voice Grade Loop (SL 1) - Zone 2		2	UEPRG	UEPLX	22.39										
	2-Wire Voice Grade Loop (SL 1) - Zone 3		3	UEPRG	UEPLX	48.26										
	2-Wire Voice Grade Line Port Rates (RES - PBX)															
	2-Wire VG Unbundled Combination 2-Way PBX Trunk Port - Res			UEPRG	UEPRD	1.36	66.91	31.29								
	LOCAL NUMBER PORTABILITY															
	Local Number Portability (1 per port)			UEPRG	LNPCP	3.15	0.00	0.00								
	FEATURES															
	All Features Offered			UEPRG	UEPVF	0.00	0.00	0.00								
	NONRECURRING CHARGES (NRCs) - CURRENTLY COMBINED															
	2-Wire Voice Grade Loop/ Line Port Combination (PBX) - Conversion - Switch-As-Is			UEPRG	USAC2		7.68	1.85								
	2-Wire Voice Grade Loop/ Line Port Combination (PBX) - Conversion - Switch with Change			UEPRG	USACC		7.68	1.85								
	ADDITIONAL NRCs															
	2-Wire Voice Grade Loop/ Line Port Combination (PBX) - Subsequent Activity			UEPRG	USAS2	0.00	0.00	0.00								
	PBX Subsequent Activity - Change/Rearrange Multiline Hunt Group						7.11	7.11								
	Unbundled Miscellaneous Rate Element, Tag Loop at End User Premise			UEPRG	URETL		8.33	0.83								
	OFF/ON PREMISES EXTENSION CHANNELS															
	Local Channel Voice grade, per termination		1	UEPRG	P2JHX	14.93	102.10	65.72								
	Local Channel Voice grade, per termination		2	UEPRG	P2JHX	25.35	102.10	65.72								

UNBUNDLED NETWORK ELEMENTS - Louisiana														Attachment: 2		Exhibit: A	
CATEGORY		RATE ELEMENTS	Interim	Zone	BCS	USOC	RATES ($)					Svc Order Submitted Elec per LSR	Svc Order Submitted Manually per LSR	Incremental Charge - Manual Svc Order vs. Electronic-1st	Incremental Charge - Manual Svc Order vs. Electronic-Add'l	Incremental Charge - Manual Svc Order vs. Electronic-Disc 1st	Incremental Charge - Manual Svc Order vs. Electronic-Disc Add'l
							Rec	Nonrecurring		Nonrecurring Disconnect		OSS Rates ($)					
								First	Add'l	First	Add'l	SOMEC	SOMAN	SOMAN	SOMAN	SOMAN	SOMAN
		Local Channel Voice grade, per termination		3	UEPRG	P2JHX	50.46	102.10	65.72								
	INTEROFFICE TRANSPORT																
		Interoffice Transport - Dedicated - 2 Wire Voice Grade - Facility Termination			UEPRG	U1TV2	22.60	39.36	26.62								
		Interoffice Transport - Dedicated - 2 Wire Voice Grade - Per Mile or Fraction Mile			UEPRG	U1TVM	0.013	0.00	0.00								
	2-WIRE VOICE GRADE LOOP WITH 2-WIRE LINE PORT (BUS - PBX)																
	UNE Port/Loop Combination Rates																
		2-Wire VG Loop/Port Combo - Zone 1		1			13.13										
		2-Wire VG Loop/Port Combo - Zone 2		2			23.75										
		2-Wire VG Loop/Port Combo - Zone 3		3			49.62										
	UNE Loop Rates																
		2-Wire Voice Grade Loop (SL 1) - Zone 1		1	UEPPX	UEPLX	11.77										
		2-Wire Voice Grade Loop (SL 1) - Zone 2		2	UEPPX	UEPLX	22.39										
		2-Wire Voice Grade Loop (SL 1) - Zone 3		3	UEPPX	UEPLX	48.26										
	2-Wire Voice Grade Line Port Rates (BUS - PBX)																
		Line Side Unbundled Combination 2-Way PBX Trunk Port - Bus			UEPPX	UEPPC	1.36	66.91	31.29								
		Line Side Unbundled Outward PBX Trunk Port - Bus			UEPPX	UEPPO	1.36	66.91	31.29								
		Line Side Unbundled Incoming PBX Trunk Port - Bus			UEPPX	UEPP1	1.36	66.91	31.29								
		2-Wire Voice Unbundled 2-Way Combination PBX Louisiana Calling Port			UEPPX	UEPL2	1.36	66.91	31.29								
		2-Wire Voice Unbundled PBX LD Terminal Ports			UEPPX	UEPLD	1.36	66.91	31.29								
		2-Wire Voice Unbundled 2-Way Combination PBX Usage Port			UEPPX	UEPXA	1.36	66.91	31.29								
		2-Wire Voice Unbundled PBX Toll Terminal Hotel Ports			UEPPX	UEPXB	1.36	66.91	31.29								
		2-Wire Voice Unbundled PBX LD DDD Terminals Port			UEPPX	UEPXC	1.36	66.91	31.29								
		2-Wire Voice Unbundled PBX LD Terminal Switchboard Port			UEPPX	UEPXD	1.36	66.91	31.29								
		2-Wire Voice Unbundled PBX LD Terminal Switchboard IDD Capable Port			UEPPX	UEPXE	1.36	66.91	31.29								
		2-Wire Voice Unbundled 2-Way PBX Louisiana Local Optional Calling Port			UEPPX	UEPXK	1.36	66.91	31.29								
		2-Wire Voice Unbundled 2-Way PBX Hotel/Hospital Economy Administrative Calling Port			UEPPX	UEPXL	1.36	66.91	31.29								
		2-Wire Voice Unbundled 2-Way PBX Hotel/Hospital Economy Room Calling Port			UEPPX	UEPXM	1.36	66.91	31.29								
		2-Wire Voice Unbundled 1-Way Outgoing PBX Hotel/Hospital Discount Room Calling Port			UEPPX	UEPXO	1.36	66.91	31.29								
		2-Wire Voice Unbundled 1-Way Outgoing PBX Louisiana Local Discount Calling Port			UEPPX	UEPXP	1.36	66.91	31.29								
		2-Wire Voice Unbundled 1-Way Outgoing PBX Measured Port			UEPPX	UEPXS	1.36	66.91	31.29								
	LOCAL NUMBER PORTABILITY																
		Local Number Portability (1 per port)			UEPPX	LNPCP	3.15	0.00	0.00								
	FEATURES																
		All Features Offered			UEPPX	UEPVF	0.00	0.00	0.00								
	NONRECURRING CHARGES (NRCs) - CURRENTLY COMBINED																
		2-Wire Voice Grade Loop/ Line Port Combination (PBX) - Conversion - Switch-As-Is			UEPPX	USAC2		7.68	1.85								
		2-Wire Voice Grade Loop/ Line Port Combination (PBX) - Conversion - Switch with Change			UEPPX	USACC		7.68	1.85								
	ADDITIONAL NRCs																
		2-Wire Voice Grade Loop/ Line Port Combination (PBX) - Subsequent Activity			UEPPX	USAS2	0.00	0.00	0.00								
		PBX Subsequent Activity - Change/Rearrange Multiline Hunt Group						7.11	7.11								
		Unbundled Miscellaneous Rate Element, Tag Loop at End User Premise			UEPPX	URETL		8.33	0.83								
	OFF/ON PREMISES EXTENSION CHANNELS																
		Local Channel Voice grade, per termination		1	UEPPX	P2JHX	14.93	102.10	65.72								
		Local Channel Voice grade, per termination		2	UEPPX	P2JHX	25.35	102.10	65.72								

UNBUNDLED NETWORK ELEMENTS - Louisiana														Attachment: 2		Exhibit: A	
CATEGORY	RATE ELEMENTS	Interim	Zone	BCS	USOC	RATES ($)					Svc Order Submitted Elec per LSR	Svc Order Submitted Manually per LSR	Incremental Charge - Manual Svc Order vs. Electronic-1st	Incremental Charge - Manual Svc Order vs. Electronic-Add'l	Incremental Charge - Manual Svc Order vs. Electronic-Disc 1st	Incremental Charge - Manual Svc Order vs. Electronic-Disc Add'l
						Rec	Nonrecurring		Nonrecurring Disconnect		OSS Rates ($)					
							First	Add'l	First	Add'l	SOMEC	SOMAN	SOMAN	SOMAN	SOMAN	SOMAN
	Local Channel Voice grade, per termination		3	UEPPX	P2JHX	50.46	102.10	65.72								
INTEROFFICE TRANSPORT																
	Interoffice Transport - Dedicated - 2 Wire Voice Grade - Facility Termination			UEPPX	U1TV2	22.60	39.36	26.62								
	Interoffice Transport - Dedicated - 2 Wire Voice Grade - Per Mile or Fraction Mile			UEPPX	U1TVM	0.013	0.00	0.00								
2-WIRE VOICE GRADE LOOP WITH 2-WIRE ANALOG LINE COIN PORT																
UNE Port/Loop Combination Rates																
	2-Wire VG Coin Port/Loop Combo – Zone 1		1			13.13										
	2-Wire VG Coin Port/Loop Combo – Zone 2		2			23.75										
	2-Wire VG Coin Port/Loop Combo – Zone 3		3			49.62										
UNE Loop Rates																
	2-Wire Voice Grade Loop (SL1) - Zone 1		1	UEPCO	UEPLX	11.77										
	2-Wire Voice Grade Loop (SL1) - Zone 2		2	UEPCO	UEPLX	22.39										
	2-Wire Voice Grade Loop (SL1) - Zone 3		3	UEPCO	UEPLX	48.26										
2-Wire Voice Grade Line Ports (COIN)																
	2-Wire Coin 2-Way without Operator Screening and without Blocking (AL, KY, LA, MS)			UEPCO	UEPRF	1.36	38.85	19.08								
	2-Wire Coin 2-Way with Operator Screening and Blocking: 011, 900/976, 1+DDD (AL, KY, LA, MS)			UEPCO	UEPRA	1.36	38.85	19.08								
	2-Wire Coin 2-Way with Operator Screening and 011 Blocking (AL, LA, MS)			UEPCO	UEPRB	1.36	38.85	19.08								
	2-Wire Coin 2-Way with Operator Screening & Blocking: 900/976, 1+DDD, 011+, & Local (AL, KY, LA, MS)			UEPCO	UEPCD	1.36	38.85	19.08								
	2-Wire Coin Outward without Blocking and without Operator Screening (KY, LA, MS)			UEPCO	UEPRN	1.36	38.85	19.08								
	2-Wire Coin Outward with Operator Screening and 011 Blocking (LA)			UEPCO	UEPLA	1.36	38.85	19.08								
	2-Wire Coin Outward with Operator Screening and Blocking: 011, 900/976, 1+DDD (AL, KY, LA, MS)			UEPCO	UEPRH	1.36	38.85	19.08								
	2-Wire Coin Outward Operator Screening & Blocking: 900/976, 1+DDD, 011+, and Local (AL, KY, LA, MS)			UEPCO	UEPCN	1.36	38.85	19.08								
	2-Wire Coin 2-Way Smartline with 900/976 (Louisiana only)			UEPCO	UEPNA	1.36	38.85	19.08								
	2-Wire Coin Outward Smartline with 900/976 (Louisiana only)			UEPCO	UEPCB	1.36	38.85	19.08								
ADDITIONAL UNE COIN PORT/LOOP (RC)																
	UNE Coin Port/Loop Combo Usage (Flat Rate)			UEPCO	URECU	1.81	0.00	0.00	0.00	0.00						
LOCAL NUMBER PORTABILITY																
	Local Number Portability (1 per port)			UEPCO	LNPCX	0.35										
NONRECURRING CHARGES - CURRENTLY COMBINED																
	2-Wire Voice Grade Loop / Line Port Combination - Conversion - Switch-as-is			UEPCO	USAC2		0.10	0.10								
	2-Wire Voice Grade Loop / Line Port Combination - Conversion - Switch with change			UEPCO	USACC		0.10	0.10								
ADDITIONAL NRCs																
	2-Wire Voice Grade Loop/Line Port Combination - Subsequent Activity			UEPCO	USAS2		0.00	0.00								
	Unbundled Miscellaneous Rate Element, Tag Loop at End User Premise			UEPCO	URETL		8.33	0.83								
2-WIRE VOICE LOOP/ 2WIRE VOICE GRADE IO TRANSPORT/ 2-WIRE LINE PORT (RES)																
UNE Port/Loop Combination Rates																
	2-Wire VG Loop/IO Tranport/Port Combo - Zone 1		1			16.45										
	2-Wire VG Loop/IO Tranport/Port Combo - Zone 2		2			26.87										
	2-Wire VG Loop/IO Tranport/Port Combo - Zone 3		3			51.98										
UNE Loop Rates																
	2-Wire Voice Grade Loop (SL2) - Zone 1		1	UEPFR	UECF2	14.93										
	2-Wire Voice Grade Loop (SL2) - Zone 2		2	UEPFR	UECF2	25.35										
	2-Wire Voice Grade Loop (SL2) - Zone 3		3	UEPFR	UECF2	50.46										
2-Wire Voice Grade Line Port Rates (Res)																
	2-Wire voice unbundled port - residence			UEPFR	UEPRL	1.52	104.41	67.93								

UNBUNDLED NETWORK ELEMENTS - Louisiana														Attachment: 2		Exhibit: A	
CATEGORY	RATE ELEMENTS	Interim	Zone	BCS	USOC	RATES ($)					Svc Order Submitted Elec per LSR	Svc Order Submitted Manually per LSR	Incremental Charge - Manual Svc Order vs. Electronic-1st	Incremental Charge - Manual Svc Order vs. Electronic-Add'l	Incremental Charge - Manual Svc Order vs. Electronic-Disc 1st	Incremental Charge - Manual Svc Order vs. Electronic-Disc Add'l
						Rec	Nonrecurring		Nonrecurring Disconnect		OSS Rates ($)					
							First	Add'l	First	Add'l	SOMEC	SOMAN	SOMAN	SOMAN	SOMAN	SOMAN
	2-Wire voice unbundled port with Caller ID - res			UEPFR	UEPRC	1.52	104.41	67.93								
	2-Wire voice unbundled port outgoing only - res			UEPFR	UEPRO	1.52	104.41	67.93								
	2-Wire voice Grade unbundled Louisiana extended local dialing parity port with Caller ID - res			UEPFR	UEPAS	1.52	104.41	67.93								
	2-Wire voice unbundled Louisiana Area Plus with Caller ID - res (RUL)			UEPFR	UEPAG	1.52	104.41	67.93								
	2-Wire voice unbundles res, low usage line port with Caller ID (LUM)			UEPFR	UEPAP	1.52	104.41	67.93								
	2-Wire Voice Unbundled Louisiana Residence Dialing Plan without Caller ID			UEPFR	UEPWG	1.52	104.41	67.93								
INTEROFFICE TRANSPORT																
	Interoffice Transport - Dedicated - 2 Wire Voice Grade - Facility Termination			UEPFR	U1TV2	22.60	39.36	26.62								
	Interoffice Transport - Dedicated - 2 Wire Voice Grade - Per Mile or Fraction Mile			UEPFR	1L5XX	0.013										
FEATURES																
	All Features Offered			UEPFR	UEPVF	0.00	0.00	0.00								
LOCAL NUMBER PORTABILITY																
	Local Number Portability (1 per port)			UEPFR	LNPCX	0.35										
NONRECURRING CHARGES (NRCs) - CURRENTLY COMBINED																
	2-Wire Loop / Dedicated IO Transport / 2 Wire Line Port Combination - Conversion - Switch-as-is			UEPFR	USAC2		8.24	1.81								
	2-Wire Loop / Dedicated IO Transport / 2 Wire Line Port Combination - Conversion - Switch-With-Change			UEPFR	USACC		8.24	1.81								
	Unbundled Miscellaneous Rate Element, Tag Designed Loop at End User Premise			UEPFR	URETN		11.20	1.10								
2-WIRE VOICE LOOP/ 2WIRE VOICE GRADE IO TRANSPORT/ 2-WIRE LINE PORT (BUS)																
UNE Port/Loop Combination Rates																
	2-Wire VG Loop/IO Tranport/Port Combo - Zone 1		1			16.45										
	2-Wire VG Loop/IO Tranport/Port Combo - Zone 2		2			26.87										
	2-Wire VG Loop/IO Tranport/Port Combo - Zone 3		3			51.98										
UNE Loop Rates																
	2-Wire Voice Grade Loop (SL2) - Zone 1		1	UEPFB	UECF2	14.93										
	2-Wire Voice Grade Loop (SL2) - Zone 2		2	UEPFB	UECF2	25.35										
	2-Wire Voice Grade Loop (SL2) - Zone 3		3	UEPFB	UECF2	50.46										
2-Wire Voice Grade Line Port (Bus)																
	2-Wire voice unbundled port without Caller ID - bus			UEPFB	UEPBL	1.52	104.41	67.93								
	2-Wire voice unbundled port with Caller + E484 ID - bus			UEPFB	UEPBC	1.52	104.41	67.93								
	2-Wire voice unbundled port outgoing only - bus			UEPFB	UEPBO	1.52	104.41	67.93								
	2-Wire voice Grade unbundled Alabama extended local dialing parity port with Caller ID - bus			UEPFB	UEPAW											
	2-Wire voice Grade unbundled Louisiana extended local dialing parity port with Caller ID - bus			UEPFB	UEPAX	1.52	104.41	67.93								
	2-Wire voice unbundled incoming only port with Caller ID - Bus			UEPFB	UEPB1	1.52	104.41	67.93								
	2-Wire voice unbundled Louisiana Bus Area Calling Port with Caller ID (BUC)			UEPFB	UEPAA	1.52	104.41	67.93								
	2-Wire Voice Unbundled Louisiana Business Dialing Plan without Caller ID			UEPFB	UEPWH	1.52	104.41	67.93								
LOCAL NUMBER PORTABILITY																
	Local Number Portability (1 per port)			UEPFB	LNPCX	0.35										
INTEROFFICE TRANSPORT																
	Interoffice Transport - Dedicated - 2 Wire Voice Grade - Facility Termination			UEPFB	U1TV2	22.60	39.36	26.62								
	Interoffice Transport - Dedicated - 2 Wire Voice Grade - Per Mile or Fraction Mile			UEPFB	1L5XX	0.013										
FEATURES																
	All Features Offered			UEPFB	UEPVF	0.00	0.00	0.00								
NONRECURRING CHARGES (NRCs) - CURRENTLY COMBINED																

UNBUNDLED NETWORK ELEMENTS - Louisiana														Attachment: 2		Exhibit: A	
CATEGORY		RATE ELEMENTS	Interim	Zone	BCS	USOC	RATES ($)					Svc Order Submitted Elec per LSR	Svc Order Submitted Manually per LSR	Incremental Charge - Manual Svc Order vs. Electronic-1st	Incremental Charge - Manual Svc Order vs. Electronic-Add'l	Incremental Charge - Manual Svc Order vs. Electronic-Disc 1st	Incremental Charge - Manual Svc Order vs. Electronic-Disc Add'l
							Rec	Nonrecurring		Nonrecurring Disconnect		OSS Rates ($)					
								First	Add'l	First	Add'l	SOMEC	SOMAN	SOMAN	SOMAN	SOMAN	SOMAN
		2-Wire Loop / Dedicated IO Transport / 2 Wire Line Port Combination - Conversion - Switch-as-is			UEPFB	USAC2		8.24	1.81								
		2-Wire Loop / Dedicated IO Transport / 2 Wire Line Port Combination - Conversion - Switch with change			UEPFB	USACC		8.24	1.81								
		Unbundled Miscellaneous Rate Element, Tag Designed Loop at End User Premise			UEPFB	URETN		11.20	1.10								
	2-WIRE VOICE LOOP/ 2WIRE VOICE GRADE IO TRANSPORT/ 2-WIRE LINE PORT (PBX)																
	UNE Port/Loop Combination Rates																
		2-Wire VG Loop/IO Tranport/Port Combo - Zone 1		1			16.45										
		2-Wire VG Loop/IO Tranport/Port Combo - Zone 2		2			26.87										
		2-Wire VG Loop/IO Tranport/Port Combo - Zone 3		3			51.98										
	UNE Loop Rates																
		2-Wire Voice Grade Loop (SL2) - Zone 1		1	UEPFP	UECF2	14.93										
		2-Wire Voice Grade Loop (SL2) - Zone 2		2	UEPFP	UECF2	25.35										
		2-Wire Voice Grade Loop (SL2) - Zone 3		3	UEPFP	UECF2	50.46										
	2-Wire Voice Grade Line Port Rates (BUS - PBX)																
		Line Side Unbundled Combination 2-Way PBX Trunk Port - Bus			UEPFP	UEPPC	1.52	132.47	82.14								
		Line Side Unbundled Outward PBX Trunk Port - Bus			UEPFP	UEPPO	1.52	132.47	82.14								
		Line Side Unbundled Incoming PBX Trunk Port - Bus			UEPFP	UEPP1	1.52	132.47	82.14								
		2-Wire Voice Unbundled 2-Way Combination PBX Louisiana Calling Port			UEPFP	UEPL2	1.52	132.47	82.14								
		2-Wire Voice Unbundled PBX LD Terminal Ports			UEPFP	UEPLD	1.52	132.47	82.14								
		2-Wire Voice Unbundled 2-Way Combination PBX Usage Port			UEPFP	UEPXA	1.52	132.47	82.14								
		2-Wire Voice Unbundled PBX Toll Terminal Hotel Ports			UEPFP	UEPXB	1.52	132.47	82.14								
		2-Wire Voice Unbundled PBX LD DDD Terminals Port			UEPFP	UEPXC	1.52	132.47	82.14								
		2-Wire Voice Unbundled PBX LD Terminal Switchboard Port			UEPFP	UEPXD	1.52	132.47	82.14								
		2-Wire Voice Unbundled PBX LD Terminal Switchboard IDD Capable Port			UEPFP	UEPXE	1.52	132.47	82.14								
		2-Wire Voice Unbundled 2-Way PBX Louisiana Local Optional Calling Port			UEPFP	UEPXK	1.52	132.47	82.14								
		2-Wire Voice Unbundled 2-Way PBX Hotel/Hospital Economy Administrative Calling Port			UEPFP	UEPXL	1.52	132.47	82.14								
		2-Wire Voice Unbundled 2-Way PBX Hotel/Hospital Economy Room Calling Port			UEPFP	UEPXM	1.52	132.47	82.14								
		2-Wire Voice Unbundled 1-Way Outgoing PBX Hotel/Hospital Discount Room Calling Port			UEPFP	UEPXO	1.52	132.47	82.14								
		2-Wire Voice Unbundled 1-Way Outgoing PBX Louisiana Local Discount Calling Port			UEPFP	UEPXP	1.52	132.47	82.14								
		2-Wire Voice Unbundled 1-Way Outgoing PBX Measured Port			UEPFP	UEPXS	1.52	132.47	82.14								
	LOCAL NUMBER PORTABILITY																
		Local Number Portability (1 per port)			UEPFP	LNPCP	3.15	0.00	0.00								
	INTEROFFICE TRANSPORT																
		Interoffice Transport - Dedicated - 2 Wire Voice Grade - Facility Termination			UEPFP	U1TV2	22.60	39.36	26.62								
		Interoffice Transport - Dedicated - 2 Wire Voice Grade - Per Mile or Fraction Mile			UEPFP	1L5XX	0.013										
	FEATURES																
		All Features Offered			UEPFP	UEPVF	0.00	0.00	0.00								
	NONRECURRING CHARGES (NRCs) - CURRENTLY COMBINED																
		2-Wire Loop / Dedicated IO Transport / 2 Wire Line Port Combination - Conversion - Switch-as-is			UEPFP	USAC2		8.24	1.81								
		2-Wire Loop / Dedicated IO Transport / 2 Wire Line Port Combination - Conversion - Switch with change			UEPFP	USACC		8.24	1.81								
		Unbundled Miscellaneous Rate Element, Tag Designed Loop at End User Premise			UEPFP	URETN		11.20	1.10								
UNBUNDLED PORT/LOOP COMBINATIONS - COST BASED RATES																	
	2-WIRE VOICE GRADE LOOP- BUS ONLY - WITH 2-WIRE DID TRUNK PORT																
	UNE Port/Loop Combination Rates																

UNBUNDLED NETWORK ELEMENTS - Louisiana														Attachment: 2		Exhibit: A	
CATEGORY	RATE ELEMENTS	Interim	Zone	BCS	USOC	RATES ($)					Svc Order Submitted Elec per LSR	Svc Order Submitted Manually per LSR	Incremental Charge - Manual Svc Order vs. Electronic-1st	Incremental Charge - Manual Svc Order vs. Electronic-Add'l	Incremental Charge - Manual Svc Order vs. Electronic-Disc 1st	Incremental Charge - Manual Svc Order vs. Electronic-Disc Add'l
						Rec	Nonrecurring		Nonrecurring Disconnect		OSS Rates ($)					
							First	Add'l	First	Add'l	SOMEC	SOMAN	SOMAN	SOMAN	SOMAN	SOMAN
	2-Wire VG Loop/2-Wire DID Trunk Port Combo - UNE Zone 1		1			23.20										
	2-Wire VG Loop/2-Wire DID Trunk Port Combo - UNE Zone 2		2			33.62										
	2-Wire VG Loop/2-Wire DID Trunk Port Combo - UNE Zone 3		3			58.73										
UNE Loop Rates																
	2-Wire Analog Voice Grade Loop - (SL2) - UNE Zone 1		1	UEPPX	UECD1	14.93										
	2-Wire Analog Voice Grade Loop - (SL2) - UNE Zone 2		2	UEPPX	UECD1	25.35										
	2-Wire Analog Voice Grade Loop - (SL2) - UNE Zone 3		3	UEPPX	UECD1	50.46										
UNE Port Rate																
	Exchange Ports - 2-Wire DID Port			UEPPX	UEPD1	8.27	217.95	83.92								
NONRECURRING CHARGES - CURRENTLY COMBINED																
	2-Wire Voice Grade Loop / 2-Wire DID Trunk Port Combination - Switch-as-is			UEPPX	USAC1		7.10	1.81								
	2-Wire Voice Grade Loop / 2-Wire DID Trunk Port Conversion with BellSouth Allowable Changes			UEPPX	USA1C		7.10	1.81								
ADDITIONAL NRCs																
	2-Wire DID Subsequent Activity - Add Trunks, Per Trunk			UEPPX	USAS1		26.01	26.01								
	Unbundled Miscellaneous Rate Element, Tag Designed Loop at End User Premise			UEPPX	URETN		11.20	1.10								
Telephone Number/Trunk Group Establisment Charges																
	DID Trunk Termination (One Per Port)			UEPPX	NDT	0.00	0.00	0.00								
	Additional DID Numbers for each Group of 20 DID Numbers			UEPPX	ND4	0.00	0.00	0.00								
	DID Numbers, Non- consecutive DID Numbers , Per Number			UEPPX	ND5	0.00	0.00	0.00								
	Reserve Non-Consecutive DID numbers			UEPPX	ND6	0.00	0.00	0.00								
	Reserve DID Numbers			UEPPX	NDV	0.00	0.00	0.00								
LOCAL NUMBER PORTABILITY																
	Local Number Portability (1 per port)			UEPPX	LNPCP	3.15	0.00	0.00								
2-WIRE ISDN DIGITAL GRADE LOOP WITH 2-WIRE ISDN DIGITAL LINE SIDE PORT																
UNE Port/Loop Combination Rates																
	2W ISDN Digital Grade Loop/2W ISDN Digital Line Side Port - UNE Zone 1		1	UEPPB UEPPR		27.48										
	2W ISDN Digital Grade Loop/2W ISDN Digital Line Side Port - UNE Zone 2		2	UEPPB UEPPR		40.34										
	2W ISDN Digital Grade Loop/2W ISDN Digital Line Side Port - UNE Zone 3		3	UEPPB UEPPR		70.99										
UNE Loop Rates																
	2-Wire ISDN Digital Grade Loop - UNE Zone 1		1	UEPPB UEPPR	USL2X	19.09										
	2-Wire ISDN Digital Grade Loop - UNE Zone 2		2	UEPPB UEPPR	USL2X	31.95										
	2-Wire ISDN Digital Grade Loop - UNE Zone 3		3	UEPPB UEPPR	USL2X	62.60										
UNE Port Rate																
	Exchange Port - 2-Wire ISDN Line Side Port			UEPPB UEPPR	UEPPB	8.39	184.10	128.42								
NONRECURRING CHARGES - CURRENTLY COMBINED																
	2-Wire ISDN Digital Grade Loop / 2-Wire ISDN Line Side Port Combination - Conversion			UEPPB UEPPR	USACB	0.00	37.40	26.23								
ADDITIONAL NRCs																
	Unbundled Miscellaneous Rate Element, Tag Designed Loop at End User Premise			UEPPB UEPPR	URETN		11.20	1.10								
	Unbundled Miscellaneous Rate Element, Tag Loop at End User Premise			UEPPB UEPPR	URETL		8.33	0.83								
LOCAL NUMBER PORTABILITY																
	Local Number Portability (1 per port)			UEPPB UEPPR	LNPCX	0.35	0.00	0.00								
B-CHANNEL USER PROFILE ACCESS:																
	CVS/CSD (DMS/5ESS)			UEPPB UEPPR	U1UCA	0.00	0.00	0.00								
	CVS (EWSD)			UEPPB UEPPR	U1UCB	0.00	0.00	0.00								
	CSD			UEPPB UEPPR	U1UCC	0.00	0.00	0.00								
B-CHANNEL AREA PLUS USER PROFILE ACCESS: (AL,KY,LA,MS SC,MS, & TN)																
	CVS/CSD (DMS/5ESS)			UEPPB UEPPR	U1UCD	0.00	0.00	0.00								
	CVS (EWSD)			UEPPB UEPPR	U1UCE	0.00	0.00	0.00								
	CSD			UEPPB UEPPR	U1UCF	0.00	0.00	0.00								

UNBUNDLED NETWORK ELEMENTS - Louisiana													Attachment: 2		Exhibit: A	
CATEGORY	RATE ELEMENTS	Interim	Zone	BCS	USOC	RATES ($)					Svc Order Submitted Elec per LSR	Svc Order Submitted Manually per LSR	Incremental Charge - Manual Svc Order vs. Electronic-1st	Incremental Charge - Manual Svc Order vs. Electronic-Add'l	Incremental Charge - Manual Svc Order vs. Electronic-Disc 1st	Incremental Charge - Manual Svc Order vs. Electronic-Disc Add'l
						Rec	Nonrecurring		Nonrecurring Disconnect		OSS Rates ($)					
							First	Add'l	First	Add'l	SOMEC	SOMAN	SOMAN	SOMAN	SOMAN	SOMAN
USER TERMINAL PROFILE																
	User Terminal Profile (EWSD only)			UEPPB UEPPR	U1UMA	0.00	0.00	0.00								
VERTICAL FEATURES																
	All Vertical Features - One per Channel B User Profile			UEPPB UEPPR	UEPVF	0.00	0.00	0.00								
INTEROFFICE CHANNEL MILEAGE																
	Interoffice Channel mileage each, including first mile and facilities termination			UEPPB UEPPR	M1GNC	22.613	39.36	26.62								
	Interoffice Channel mileage each, additional mile			UEPPB UEPPR	M1GNM	0.013	0.00	0.00								
4-WIRE DS1 DIGITAL LOOP WITH 4-WIRE ISDN DS1 DIGITAL TRUNK PORT																
The UNE-P DS1 combination rates below for in this rate exhibit apply to the embedded base in place as of 10/2/03 until 4/1/04. After 4/1/04 these rates shall revert to tariff rates or a separate commercial agreement.																
Requests for 4-Wire DS1 Digital Loop with 4-Wire ISDN DS1 Digital Trunk Port after the effective date of this amendment shall be provided pursuant to a separate agreement or tariff at BellSouth's discretion.																
UNE Port/Loop Combination Rates																
	4W DS1 Digital Loop/4W ISDN DS1 Digital Trunk Port - UNE Zone 1		1	UEPPP		180.52										
	4W DS1 Digital Loop/4W ISDN DS1 Digital Trunk Port - UNE Zone 2		2	UEPPP		289.78										
	4W DS1 Digital Loop/4W ISDN DS1 Digital Trunk Port - UNE Zone 3		3	UEPPP		586.76										
UNE Loop Rates																
	4-Wire DS1 Digital Loop - UNE Zone 1		1	UEPPP	USL4P	85.70										
	4-Wire DS1 Digital Loop - UNE Zone 2		2	UEPPP	USL4P	194.96										
	4-Wire DS1 Digital Loop - UNE Zone 3		3	UEPPP	USL4P	491.94										
UNE Port Rate																
	Exchange Ports - 4-Wire ISDN DS1 Port (E:4/1/2004)			UEPPP	UEPPP	94.82	443.08	251.60								
NONRECURRING CHARGES - CURRENTLY COMBINED																
	4-Wire DS1 Digital Loop / 4-Wire ISDN DS1 Digital Trunk Port Combination - Conversion -Switch-as-is (E:4/1/2004)			UEPPP	USACP	0.00	115.63	76.29								
ADDITIONAL NRCs																
	4-Wire DS1 Loop/4-W ISDN Digtl Trk Port - Subsqt Actvy-Inward/two way Tel Nos. (except NC)			UEPPP	PR7TF		0.48									
	4-Wire DS1 Loop / 4-Wire ISDN DS1 Digital Trunk Port - Outward Tel Numbers (All States except NC)			UEPPP	PR7TO		11.18	11.18								
	4-Wire DS1 Loop / 4-Wire ISDN DS1 Digital Trk Port - Subsequent Inward Tel Numbers			UEPPP	PR7ZT		22.35	22.35								
LOCAL NUMBER PORTABILITY																
	Local Number Portability (1 per port)			UEPPP	LNPCN	1.75										
INTERFACE (Provsioning Only)																
	Voice/Data			UEPPP	PR71V	0.00	0.00	0.00								
	Digital Data			UEPPP	PR71D	0.00	0.00	0.00								
	Inward Data			UEPPP	PR71E	0.00	0.00	0.00								
New or Additional "B" Channel																
	New or Additional - Voice/Data B Channel			UEPPP	PR7BV	0.00	14.11									
	New or Additional - Digital Data B Channel			UEPPP	PR7BF	0.00	14.11									
	New or Additional Inward Data B Channel			UEPPP	PR7BD	0.00	14.11									
CALL TYPES																
	Inward			UEPPP	PR7C1	0.00	0.00	0.00								
	Outward			UEPPP	PR7CO	0.00	0.00	0.00								
	Two-way			UEPPP	PR7CC	0.00	0.00	0.00								
Interoffice Channel Mileage																
	Fixed Each Including First Mile			UEPPP	1LN1A	70.7352	86.69	79.44								
	Each Airline-Fractional Additional Mile			UEPPP	1LN1B	0.2652										
4-WIRE DS1 DIGITAL LOOP WITH 4-WIRE DDITS TRUNK PORT																
The UNE-P DS1 combination rates below for in this rate exhibit apply to the embedded base in place as of 10/2/03 until 4/1/04. After 4/1/04 these rates shall revert to tariff rates or a separate commercial agreement.																
Requests for 4-Wire DS1 Digital Loop with 4-Wire DDITS after the effective date of this amendment shall be provided pursuant to a separate agreement or tariff at BellSouth's discretion.																
UNE Port/Loop Combination Rates																
	4W DS1 Digital Loop/4W DDITS Trunk Port - UNE Zone 1		1	UEPDC		154.17										
	4W DS1 Digital Loop/4W DDITS Trunk Port - UNE Zone 2		2	UEPDC		263.43										
	4W DS1 Digital Loop/4W DDITS Trunk Port - UNE Zone 3		3	UEPDC		560.41										
UNE Loop Rates																

UNBUNDLED NETWORK ELEMENTS - Louisiana														Attachment: 2		Exhibit: A	
CATEGORY	RATE ELEMENTS	Interim	Zone	BCS	USOC	RATES ($)					Svc Order Submitted Elec per LSR	Svc Order Submitted Manually per LSR	Incremental Charge - Manual Svc Order vs. Electronic-1st	Incremental Charge - Manual Svc Order vs. Electronic-Add'l	Incremental Charge - Manual Svc Order vs. Electronic-Disc 1st	Incremental Charge - Manual Svc Order vs. Electronic-Disc Add'l
						Rec	Nonrecurring		Nonrecurring Disconnect		OSS Rates ($)					
							First	Add'l	First	Add'l	SOMEC	SOMAN	SOMAN	SOMAN	SOMAN	SOMAN
	4-Wire DS1 Digital Loop - UNE Zone 1		1	UEPDC	USLDC	85.70										
	4-Wire DS1 Digital Loop - UNE Zone 2		2	UEPDC	USLDC	194.96										
	4-Wire DS1 Digital Loop - UNE Zone 3		3	UEPDC	USLDC	491.94										
UNE Port Rate																
	4-Wire DDITS Digital Trunk Port (E:4/1/2004)			UEPDC	UDD1T	68.47	441.34	245.90								
NONRECURRING CHARGES - CURRENTLY COMBINED																
	4-Wire DS1 Digital Loop / 4-Wire DDITS Trunk Port Combination - Switch-as-is (E:4/1/2004)			UEPDC	USAC4		125.75	65.08								
	4-Wire DS1 Digital Loop / 4-Wire DDITS Trunk Port Combination - Conversion with DS1 Changes (E:4/1/2004)			UEPDC	USAWA		125.75	65.08								
	4-Wire DS1 Digital Loop / 4-Wire DDITS Trunk Port Combination - Conversion with Change - Trunk (E:4/1/2004)			UEPDC	USAWB		125.75	65.08								
ADDITIONAL NRCs																
	4-Wire DS1 Loop / 4-Wire DDITS Trunk Port - NRC - Subsequent Channel Activation/Chan - 2-Way Trunk			UEPDC	UDTTA		14.06	14.06								
	4-Wire DS1 Loop / 4-Wire DDITS Trunk Port - Subsequent Channel Activation/Chan - 1-Way Outward Trunk			UEPDC	UDTTB		14.06	14.06								
	4-Wire DS1 Loop / 4-Wire DDITS Trunk Port - Subsqnt Channel Activation/Chan Inward Trunk w/out DID			UEPDC	UDTTC		14.06	14.06								
	4-Wire DS1 Loop / 4-Wire DDITS Trunk Port - Subsqnt Chan Activation Per Chan - Inward Trunk with DID			UEPDC	UDTTD		14.06	14.06								
	4-Wire DS1 Loop / 4-Wire DDITS Trunk Port - Subsqnt Chan Activation / Chan - 2-Way DID w User Trans			UEPDC	UDTTE		14.06	14.06								
BIPOLAR 8 ZERO SUBSTITUTION																
	B8ZS -Superframe Format			UEPDC	CCOSF		0.00i	605.00s								
	B8ZS - Extended Superframe Format			UEPDC	CCOEF		0.00i	605.00s								
Alternate Mark Inversion																
	AMI -Superframe Format			UEPDC	MCOSF		0.00	0.00								
	AMI - Extended SuperFrame Format			UEPDC	MCOPO		0.00	0.00								
Telephone Number/Trunk Group Establisment Charges																
	Telephone Number for 2-Way Trunk Group			UEPDC	UDTGX	0.00										
	Telephone Number for 1-Way Outward Trunk Group			UEPDC	UDTGY	0.00										
	Telephone Number for 1-Way Inward Trunk Group Without DID			UEPDC	UDTGZ	0.00										
	DID Numbers for each Group of 20 DID Numbers			UEPDC	ND4	0.00										
	DID Numbers, Non- consecutive DID Numbers , Per Number			UEPDC	ND5	0.00										
	Reserve Non-Consecutive DID Nos.			UEPDC	ND6	0.00	0.00	0.00								
	Reserve DID Numbers			UEPDC	NDV	0.00	0.00	0.00								
Dedicated DS1 (Interoffice Channel Mileage) - FX/FCO for 4-Wire DS1 Digital Loop with 4-Wire DDITS Trunk Port																
	Interoffice Channel Mileage - Fixed rate 0-8 miles (Facilities Termination)			UEPDC	1LNO1	70.47	86.69	79.44								
	Interoffice Channel Mileage - Additional rate per mile - 0-8 miles			UEPDC	1LNOA	0.2652	0.00	0.00								
	Interoffice Channel Mileage - Fixed rate 9-25 miles (Facilities Termination)			UEPDC	1LNO2	0.00	0.00	0.00								
	Interoffice Channel Mileage - Additional rate per mile - 9-25 miles			UEPDC	1LNOB	0.2652	0.00	0.00								
	Interoffice Channel Mileage - Fixed rate 25+ miles (Facilities Termination)			UEPDC	1LNO3	0.00	0.00	0.00	0.00							
	Interoffice Channel Mileage - Additional rate per mile - 25+ miles			UEPDC	1LNOC	0.2652	0.00	0.00								
	Local Number Portability, per DS0 Activated			UEPDC	LNPCP	3.15	0.00	0.00	0.00							
	Central Office Termininating Point			UEPDC	CTG	0.00										
4-WIRE DS1 LOOP WITH CHANNELIZATION WITH PORT																
System is 1 DS1 Loop, 1 D4 Channel Bank, and up to 24 Feature Activations																
Each System can have up to 24 combinations of rates depending on type and number of ports used																
The UNE-P DS1 combination rates below for 4-Wire DS1 Loop with Channelization with Port in this rate exhibit apply to the embedded base in place as of 10/2/03 until 4/1/04. After 4/1/04 these rates shall revert to tariff rates or a separate agreement.																
Requests for 4-Wire DS1 Loop with Channelization with Port after the effective date of this amendment shall be provided pursuant to a separate agreement or tariff at BellSouth's discretion.																
UNE DS1 Loop																
	4-Wire DS1 Loop - UNE Zone 1		1	UEPMG	USLDC	85.70	0.00	0.00								

UNBUNDLED NETWORK ELEMENTS - Louisiana													Attachment: 2		Exhibit: A	
CATEGORY	RATE ELEMENTS	Interim	Zone	BCS	USOC	RATES ($)					Svc Order Submitted Elec per LSR	Svc Order Submitted Manually per LSR	Incremental Charge - Manual Svc Order vs. Electronic-1st	Incremental Charge - Manual Svc Order vs. Electronic-Add'l	Incremental Charge - Manual Svc Order vs. Electronic-Disc 1st	Incremental Charge - Manual Svc Order vs. Electronic-Disc Add'l
						Rec	Nonrecurring		Nonrecurring Disconnect		OSS Rates ($)					
							First	Add'l	First	Add'l	SOMEC	SOMAN	SOMAN	SOMAN	SOMAN	SOMAN
	4-Wire DS1 Loop - UNE Zone 2		2	UEPMG	USLDC	194.96	0.00	0.00								
	4-Wire DS1 Loop - UNE Zone 3		3	UEPMG	USLDC	491.94	0.00	0.00								
UNE DSO Channelization Capacities (D4 Channel Bank Configurations)																
	24 DSO Channel Capacity - 1 per DS1			UEPMG	VUM24	97.35	0.00	0.00								
	48 DSO Channel Capacity - 1 per 2 DS1s			UEPMG	VUM48	194.70	0.00	0.00								
	96 DSO Channel Capacity -1per 4 DS1s			UEPMG	VUM96	389.40	0.00	0.00								
	144 DS0 Channel Capacity - 1 per 6 DS1s			UEPMG	VUM14	584.10	0.00	0.00								
	192 DS0 Channel Capacity -1 per 8 DS1s			UEPMG	VUM19	778.80	0.00	0.00								
	240 DS0 Channel Capacity - 1 per 10 DS1s			UEPMG	VUM2O	973.50	0.00	0.00								
	288 DS0 Channel Capacity - 1 per 12 DS1s			UEPMG	VUM28	1,168.20	0.00	0.00								
	384 DS0 Channel Capacity - 1 per 16 DS1s			UEPMG	VUM38	1,557.60	0.00	0.00								
	480 DS0 Channel Capacity - 1 per 20 DS1s			UEPMG	VUM4O	1,947.00	0.00	0.00								
	576 DS0 Channel Capacity -1 per 24 DS1s			UEPMG	VUM57	2,336.40	0.00	0.00								
	672 DS0 Channel Capacity - 1 per 28 DS1s			UEPMG	VUM67	2,725.80	0.00	0.00								
Non-Recurring Charges (NRC) Associated with 4-Wire DS1 Loop with Channeliztion with Port - Conversion Charge Based on a System																
A Minimum System configuration is One (1) DS1, One (1) D4 Channel Bank, and Up To 24 DSO Ports with Feature Activations.																
Multiples of this configuration functioning as one are considered Add'l after the minimum system configuration is counted.																
	NRC - Conversion (Currently Combined) with or without BellSouth Allowed Changes			UEPMG	USAC4	0.00	146.13	8.12								
System Additions at End User Locations Where 4-Wire DS1 Loop with Channelization with Port Combination Currently Exists and																
New (Not Currently Combined) in all states, except in Density Zone 1 of Top 8 MSA's																
	1 DS1/D4 Channel Bank - Additionally Add NRC for each Port and Assoc Fea Activation (E:4/1/2004)			UEPMG	VUMD4	0.00	715.54	467.54								
Bipolar 8 Zero Substitution																
	Clear Channel Capability Format, superframe - Subsequent Activity Only			UEPMG	CCOSF	0.00	0.00i	605.00s								
	Clear Channel Capability Format - Extended Superframe - Subsequent Activity Only			UEPMG	CCOEF	0.00	0.00i	605.00s								
Alternate Mark Inversion (AMI)																
	Superframe Format			UEPMG	MCOSF	0.00	0.00	0.00								
	Extended Superframe Format			UEPMG	MCOPO	0.00	0.00	0.00								
Exchange Ports Associated with 4-Wire DS1 Loop with Channelization with Port																
Exchange Ports																
	Line Side Combination Channelized PBX Trunk Port - Business (E:4/1/2004)			UEPPX	UEPCX	1.52	0.00	0.00	0.00	0.00						
	Line Side Outward Channelized PBX Trunk Port - Business (E:4/1/2004)			UEPPX	UEPOX	1.52	0.00	0.00	0.00	0.00						
	Line Side Inward Only Channelized PBX Trunk Port without DID (E:4/1/2004)			UEPPX	UEP1X	1.52	0.00	0.00	0.00	0.00						
	2-Wire Trunk Side Unbundled Channelized DID Trunk Port (E:4/1/2004)			UEPPX	UEPDM	8.29	0.00	0.00	0.00	0.00						
	Unbundled Exchange Ports, 2-Wire Channelized – Outdial – (AL, KY, LA, MS, & TN)(Conversion from Network Access Service) (E:4/1/2004)			UEPPX	UEPCY	1.52	0.00	0.00	0.00	0.00						
	Unbundled Exchange Ports, 2-Wire Channelized – Combination (AL, KY, LA, MS, & TN) (Conversion from Network Access Service) (E:4/1/2004)			UEPPX	UEPCT	1.52	0.00	0.00	0.00	0.00						
	Unbundled Exchange Ports, 2-Wire Channelized – Outdial – Louisiana Only – Calling Plan (E:4/1/2004)			UEPPX	UEPC2	1.52	0.00	0.00	0.00	0.00						
	Unbundled Exchange Ports, 2-Wire Channelized – Two Way - Louisiana Only – Calling Plan (E:4/1/2004)			UEPPX	UEPC3	1.52	0.00	0.00	0.00	0.00						
Feature Activations - Unbundled Loop Concentration																
	Feature (Service) Activation for each Line Port Terminated in D4 Bank			UEPPX	1PQWM	0.6497	25.36	13.40								
	Feature (Service) Activation for each Trunk Port Terminated in D4 Bank			UEPPX	1PQWU	0.6497	78.05	18.40								
Telephone Number/ Group Establishment Charges for DID Service																
	DID Trunk Termination (1 per Port)			UEPPX	NDT	0.00	0.00	0.00								
	DID Numbers - groups of 20 - Valid all States			UEPPX	ND4	0.00	0.00	0.00								

UNBUNDLED NETWORK ELEMENTS - Louisiana													Attachment: 2		Exhibit: A	
CATEGORY	RATE ELEMENTS	Interim	Zone	BCS	USOC	RATES ($)					Svc Order Submitted Elec per LSR	Svc Order Submitted Manually per LSR	Incremental Charge - Manual Svc Order vs. Electronic-1st	Incremental Charge - Manual Svc Order vs. Electronic-Add'l	Incremental Charge - Manual Svc Order vs. Electronic-Disc 1st	Incremental Charge - Manual Svc Order vs. Electronic-Disc Add'l
						Rec	Nonrecurring		Nonrecurring Disconnect		OSS Rates ($)					
							First	Add'l	First	Add'l	SOMEC	SOMAN	SOMAN	SOMAN	SOMAN	SOMAN
	Non-Consecutive DID Numbers - per number			UEPPX	ND5	0.00	0.00	0.00								
	Reserve Non-Consecutive DID Numbers			UEPPX	ND6	0.00	0.00	0.00								
	Reserve DID Numbers			UEPPX	NDV	0.00	0.00	0.00								
Local Number Portability																
	Local Number Portability - 1 per port			UEPPX	LNPCP	3.15	0.00	0.00								
FEATURES - Vertical and Optional																
Local Switching Features Offered with Line Side Ports Only																
	All Features Available			UEPPX	UEPVF	0.00	0.00	0.00								
UNBUNDLED CENTREX PORT/LOOP COMBINATIONS - COST BASED RATES																
1. Cost Based Rates are applied where BellSouth is required by FCC and/or State Commission rule to provide Unbundled Local Switching or Switch Ports.																
2. Features shall apply to the Unbundled Port/Loop Combination - Cost Based Rate section in the same manner as they are applied to the Stand-Alone Unbundled Port section of this Rate Exhibit.																
3. End Office and Tandem Switching Usage and Common Transport Usage rates in the Port section of this rate exhibit shall apply to all combinations of loop/port network elements except for UNE Coin Port/Loop Combinations.																
4. The first and additional Port nonrecurring charges apply to Not Currently Combined Combos. For Currently Combined Combos, the nonrecurring charges shall be those identified in the Nonrecurring - Currently Combined sections. Additional NRCs may apply also and are categorized accordingly.																
5. Market Rates for Unbundled Centrex Port/Loop Combination will be negotiated on an Individual Case Basis, until further notice.																
UNE-P CENTREX - 1AESS - (Valid in AL,FL,GA,KY,LA,MS,&TN only)																
2-Wire VG Loop/2-Wire Voice Grade Port (Centrex) Combo																
UNE Port/Loop Combination Rates (Non-Design)																
	2-Wire VG Loop/2-Wire Voice Grade Port (Centrex) Port Combo - Non-Design		1	UEP91		13.13										
	2-Wire VG Loop/2-Wire Voice Grade Port (Centrex)Port Combo - Non-Design		2	UEP91		23.75										
	2-Wire VG Loop/2-Wire Voice Grade Port (Centrex)Port Combo - Non-Design		3	UEP91		49.62										
UNE Port/Loop Combination Rates (Design)																
	2-Wire VG Loop/2-Wire Voice Grade Port (Centrex) Port Combo - Design		1	UEP91		16.29										
	2-Wire VG Loop/2-Wire Voice Grade Port (Centrex)Port Combo - Design		2	UEP91		26.71										
	2-Wire VG Loop/2-Wire Voice Grade Port (Centrex)Port Combo - Design		3	UEP91		48.26										
UNE Loop Rate																
	2-Wire Voice Grade Loop (SL 1) - Zone 1		1	UEP91	UECS1	11.77										
	2-Wire Voice Grade Loop (SL 1) - Zone 2		2	UEP91	UECS1	22.39										
	2-Wire Voice Grade Loop (SL 1) - Zone 3		3	UEP91	UECS1	48.26										
	2-Wire Voice Grade Loop (SL 2) - Zone 1		1	UEP91	UECS2	14.93										
	2-Wire Voice Grade Loop (SL 2) - Zone 2		2	UEP91	UECS2	25.35										
	2-Wire Voice Grade Loop (SL 2) - Zone 3		3	UEP91	UECS2	50.46										
UNE Ports																
All States (Except North Carolina and Sout Carolina)																
	2-Wire Voice Grade Port (Centrex) Basic Local Area			UEP91	UEPYA	1.36	38.85	19.08								
	2-Wire Voice Grade Port (Centrex 800 termination)Basic Local Area			UEP91	UEPYB	1.36	38.85	19.08								
	2-Wire Voice Grade Port (Centrex with Caller ID)Note1 Basic Local Area			UEP91	UEPYH	1.36	38.85	19.08								
	2-Wire Voice Grade Port (Centrex from diff Serving Wire Center) Note 2, 3 Basic Local Area			UEP91	UEPYM	1.36	104.41	67.93								
	2-Wire Voice Grade Port, Diff Serving Wire Center - 800 Service Term - Basic Local Area			UEP91	UEPYZ	1.36	104.41	67.93								
	2-Wire Voice Grade Port terminated in on Megalink or equivalent - Basic Local Area			UEP91	UEPY9	1.36	38.85	19.08								
	2-Wire Voice Grade Port Terminated on 800 Service Term - Basic Local Area			UEP91	UEPY2	1.36	38.85	19.08								
AL, KY, LA, MS, & TN Only																
	2-Wire Voice Grade Port (Centrex)			UEP91	UEPQA	1.36	38.85	19.08								
	2-Wire Voice Grade Port (Centrex 800 termination)			UEP91	UEPQB	1.36	38.85	19.08								
	2-Wire Voice Grade Port (Centrex with Caller ID)1			UEP91	UEPQH	1.36	38.85	19.08								
	2-Wire Voice Grade Port (Centrex from diff Serving Wire Center)2,3			UEP91	UEPQM	1.36	104.41	67.93								

UNBUNDLED NETWORK ELEMENTS - Louisiana														Attachment: 2		Exhibit: A	
CATEGORY		RATE ELEMENTS	Interim	Zone	BCS	USOC	RATES ($)					Svc Order Submitted Elec per LSR	Svc Order Submitted Manually per LSR	Incremental Charge - Manual Svc Order vs. Electronic-1st	Incremental Charge - Manual Svc Order vs. Electronic-Add'l	Incremental Charge - Manual Svc Order vs. Electronic-Disc 1st	Incremental Charge - Manual Svc Order vs. Electronic-Disc Add'l
							Rec	Nonrecurring		Nonrecurring Disconnect		OSS Rates ($)					
								First	Add'l	First	Add'l	SOMEC	SOMAN	SOMAN	SOMAN	SOMAN	SOMAN
		2-Wire Voice Grade Port, Diff Serving Wire Center - 2,3 - 800 Service Term			UEP91	UEPQZ	1.36	104.41	67.93								
		2-Wire Voice Grade Port terminated in on Megalink or equivalent			UEP91	UEPQ9	1.36	38.85	19.08								
		2-Wire Voice Grade Port Terminated on 800 Service Term			UEP91	UEPQ2	1.36	38.85	19.08								
	Local Switching																
		Centrex Intercom Funtionality, per port			UEP91	URECS	0.8577										
	Local Number Portability																
		Local Number Portability (1 per port)			UEP91	LNPCC	0.35										
	Features																
		All Standard Features Offered, per port			UEP91	UEPVF	0.00										
		All Select Features Offered, per port			UEP91	UEPVS	0.00	412.25									
		All Centrex Control Features Offered, per port			UEP91	UEPVC	0.00										
	NARS																
		Unbundled Network Access Register - Combination			UEP91	UARCX	0.00	0.00	0.00	0.00	0.00						
		Unbundled Network Access Register - Indial			UEP91	UAR1X	0.00	0.00	0.00	0.00	0.00						
		Unbundled Network Access Register - Outdial			UEP91	UAROX	0.00	0.00	0.00	0.00	0.00						
	Miscellaneous Terminations																
	2-Wire Trunk Side																
		Trunk Side Terminations, each			UEP91	CENA6	8.29	115.85	18.20								
	Interoffice Channel Mileage - 2-Wire																
		Interoffice Channel Facilities Termination - Voice Grade			UEP91	M1GBC	22.60	39.36	26.62								
		Interoffice Channel mileage, per mile or fraction of mile			UEP91	M1GBM	0.013										
	Feature Activations (DS0) Centrex Loops on Channelized DS1 Service																
	D4 Channel Bank Feature Activations																
		Feature Activation on D-4 Channel Bank Centrex Loop Slot			UEP91	1PQWS	0.6497										
		Feature Activation on D-4 Channel Bank FX line Side Loop Slot			UEP91	1PQW6	0.6497										
		Feature Activation on D-4 Channel Bank FX Trunk Side Loop Slot			UEP91	1PQW7	0.6497										
		Feature Activation on D-4 Channel Bank Centrex Loop Slot - Different Wire Center			UEP91	1PQWP	0.6497										
		Feature Activation on D-4 Channel Bank Private Line Loop Slot			UEP91	1PQWV	0.6497										
		Feature Activation on D-4 Channel Bank Tjie Line/Trunk Loop Slot			UEP91	1PQWQ	0.6497										
		Feature Activation on D-4 Channel Bank WATS Loop Slot			UEP91	1PQWA	0.6497										
	Non-Recurring Charges (NRC) Associated with UNE-P Centrex																
		Conversion - Currently Combined Switch-As-Is with allowed changes, per port			UEP91	USAC2		0.10	0.10								
		Conversion of Existing Centrex Common Block			UEP91	USACN	0.00	36.66	16.10								
		New Centrex Standard Common Block			UEP91	M1ACS	0.00	680.40									
		New Centrex Customized Common Block			UEP91	M1ACC	0.00	680.40									
		Secondary Block, per Block			UEP91	M2CC1	0.00	79.31									
		NAR Establishment Charge, Per Occasion			UEP91	URECA	0.00	73.93									
	Additional Non-Recurring Charges (NRC)																
		Unbundled Miscellaneous Rate Element, Tag Loop at End Use Premise			UEP91	URETL		8.33	0.83								
		Unbundled Miscellaneous Rate Element, Tag Design Loop at End Use Premise			UEP91	URETN		11.20	1.10								
	UNE-P CENTREX - 5ESS (Valid in All States)																
	2-Wire VG Loop/2-Wire Voice Grade Port (Centrex) Combo																
	UNE Port/Loop Combination Rates (Non-Design)																
		2-Wire VG Loop/2-Wire Voice Grade Port (Centrex) Port Combo - Non-Design		1	UEP95		13.13										
		2-Wire VG Loop/2-Wire Voice Grade Port (Centrex)Port Combo - Non-Design		2	UEP95		23.75										
		2-Wire VG Loop/2-Wire Voice Grade Port (Centrex)Port Combo - Non-Design		3	UEP95		49.62										

UNBUNDLED NETWORK ELEMENTS - Louisiana													Attachment: 2		Exhibit: A	
CATEGORY	RATE ELEMENTS	Interim	Zone	BCS	USOC	RATES ($)					Svc Order Submitted Elec per LSR	Svc Order Submitted Manually per LSR	Incremental Charge - Manual Svc Order vs. Electronic-1st	Incremental Charge - Manual Svc Order vs. Electronic-Add'l	Incremental Charge - Manual Svc Order vs. Electronic-Disc 1st	Incremental Charge - Manual Svc Order vs. Electronic-Disc Add'l
						Rec	Nonrecurring		Nonrecurring Disconnect		OSS Rates ($)					
							First	Add'l	First	Add'l	SOMEC	SOMAN	SOMAN	SOMAN	SOMAN	SOMAN
UNE Port/Loop Combination Rates (Design)																
	2-Wire VG Loop/2-Wire Voice Grade Port (Centrex) Port Combo - Design		1	UEP95		16.29										
	2-Wire VG Loop/2-Wire Voice Grade Port (Centrex)Port Combo - Design		2	UEP95		26.71										
	2-Wire VG Loop/2-Wire Voice Grade Port (Centrex)Port Combo - Design		3	UEP95		51.82										
UNE Loop Rate																
	2-Wire Voice Grade Loop (SL 1) - Zone 1		1	UEP95	UECS1	11.77										
	2-Wire Voice Grade Loop (SL 1) - Zone 2		2	UEP95	UECS1	22.39										
	2-Wire Voice Grade Loop (SL 1) - Zone 3		3	UEP95	UECS1	48.26										
	2-Wire Voice Grade Loop (SL 2) - Zone 1		1	UEP95	UECS2	14.93										
	2-Wire Voice Grade Loop (SL 2) - Zone 2		2	UEP95	UECS2	25.35										
	2-Wire Voice Grade Loop (SL 2) - Zone 3		3	UEP95	UECS2	50.46										
UNE Port Rate																
All States																
	2-Wire Voice Grade Port (Centrex) Basic Local Area			UEP95	UEPYA	1.36	38.85	19.08								
	2-Wire Voice Grade Port (Centrex 800 termination)			UEP95	UEPYB	1.36	38.85	19.08								
	2-Wire Voice Grade Port (Centrex with Caller ID)1Basic Local Area			UEP95	UEPYH	1.36	38.85	19.08								
	2-Wire Voice Grade Port (Centrex from diff Serving Wire Center)2,3 Basic Local Area			UEP95	UEPYM	1.36	104.41	67.93								
	2-Wire Voice Grade Port, Diff Serving Wire Center 2,3 - 800 Service Term - Basic Local Area			UEP95	UEPYZ	1.36	104.41	67.93								
	2-Wire Voice Grade Port terminated in on Megalink or equivalent - Basic Local Area			UEP95	UEPY9	1.36	38.85	19.08								
	2-Wire Voice Grade Port Terminated on 800 Service Term - Basic Local Area			UEP95	UEPY2	1.36	38.85	19.08								
AL, KY, LA, MS, SC, & TN Only																
	2-Wire Voice Grade Port (Centrex)			UEP95	UEPQA	1.36	38.85	19.08								
	2-Wire Voice Grade Port (Centrex 800 termination)			UEP95	UEPQB	1.36	38.85	19.08								
	2-Wire Voice Grade Port (Centrex with Caller ID)1			UEP95	UEPQH	1.36	38.85	19.08								
	2-Wire Voice Grade Port (Centrex from diff Serving Wire Center)2,3			UEP95	UEPQM	1.36	104.41	67.93								
	2-Wire Voice Grade Port, Diff Serving Wire Center - 800 Service Term 2,3			UEP95	UEPQZ	1.36	104.41	67.93								
	2-Wire Voice Grade Port terminated in on Megalink or equivalent			UEP95	UEPQ9	1.36	38.85	19.08								
	2-Wire Voice Grade Port Terminated on 800 Service Term			UEP95	UEPQ2	1.36	38.85	19.08								
Local Switching																
	Centrex Intercom Funtionality, per port			UEP95	URECS	0.8577										
Local Number Portability																
	Local Number Portability (1 per port)			UEP95	LNPCC	0.35										
Features																
	All Standard Features Offered, per port			UEP95	UEPVF	0.00										
	All Select Features Offered, per port			UEP95	UEPVS	0.00	412.25									
	All Centrex Control Features Offered, per port			UEP95	UEPVC	0.00										
NARS																
	Unbundled Network Access Register - Combination			UEP95	UARCX	0.00	0.00	0.00	0.00	0.00						
	Unbundled Network Access Register - Indial			UEP95	UAR1X	0.00	0.00	0.00	0.00	0.00						
	Unbundled Network Access Register - Outdial			UEP95	UAROX	0.00	0.00	0.00	0.00	0.00						
Miscellaneous Terminations																
2-Wire Trunk Side																
	Trunk Side Terminations, each			UEP95	CEND6	8.29	115.85	18.20								
4-Wire Digital (1.544 Megabits)																
	DS1 Circuit Terminations, each			UEP95	M1HD1	68.47	196.18	92.92								
	DS0 Channels Activated, each			UEP95	M1HDO	0.00	14.06									
Interoffice Channel Mileage - 2-Wire																
	Interoffice Channel Facilities Termination			UEP95	M1GBC	22.60	39.36	26.62								

UNBUNDLED NETWORK ELEMENTS - Louisiana														Attachment: 2		Exhibit: A	
CATEGORY		RATE ELEMENTS	Interim	Zone	BCS	USOC	RATES ($)					Svc Order Submitted Elec per LSR	Svc Order Submitted Manually per LSR	Incremental Charge - Manual Svc Order vs. Electronic-1st	Incremental Charge - Manual Svc Order vs. Electronic-Add'l	Incremental Charge - Manual Svc Order vs. Electronic-Disc 1st	Incremental Charge - Manual Svc Order vs. Electronic-Disc Add'l
							Rec	Nonrecurring		Nonrecurring Disconnect		OSS Rates ($)					
								First	Add'l	First	Add'l	SOMEC	SOMAN	SOMAN	SOMAN	SOMAN	SOMAN
		Interoffice Channel mileage, per mile or fraction of mile			UEP95	M1GBM	0.013										
	Feature Activations (DS0) Centrex Loops on Channelized DS1 Service																
	D4 Channel Bank Feature Activations																
		Feature Activation on D-4 Channel Bank Centrex Loop Slot			UEP95	1PQWS	0.6497										
		Feature Activation on D-4 Channel Bank FX line Side Loop Slot			UEP95	1PQW6	0.6497										
		Feature Activation on D-4 Channel Bank FX Trunk Side Loop Slot			UEP95	1PQW7	0.6497										
		Feature Activation on D-4 Channel Bank Centrex Loop Slot - Different Wire Center			UEP95	1PQWP	0.6497										
		Feature Activation on D-4 Channel Bank Private Line Loop Slot			UEP95	1PQWV	0.6497										
		Feature Activation on D-4 Channel Bank Tjie Line/Trunk Loop Slot			UEP95	1PQWQ	0.6497										
		Feature Activation on D-4 Channel Bank WATS Loop Slot			UEP95	1PQWA	0.6497										
	Non-Recurring Charges (NRC) Associated with UNE-P Centrex																
		NRC Conversion Currently Combined Switch-As-Is with allowed changes, per port			UEP95	USAC2		0.10	0.10								
		Conversion of Existing Centrex Common Block, each			UEP95	USACN		36.66	16.10								
		New Centrex Standard Common Block			UEP95	M1ACS	0.00	680.40									
		New Centrex Customized Common Block			UEP95	M1ACC	0.00	680.40									
		NAR Establishment Charge, Per Occasion			UEP95	URECA	0.00	73.93									
	Additional Non-Recurring Charges (NRC)																
		Unbundled Miscellaneous Rate Element, Tag Loop at End Use Premise			UEP95	URETL		8.33	0.83								
		Unbundled Miscellaneous Rate Element, Tag Design Loop at End Use Premise			UEP95	URETN		11.20	1.10								
	UNE-P CENTREX - DMS100 (Valid in All States)																
	2-Wire VG Loop/2-Wire Voice Grade Port (Centrex) Combo																
	UNE Port/Loop Combination Rates (Non-Design)																
		2-Wire VG Loop/2-Wire Voice Grade Port (Centrex) Port Combo - Non-Design		1	UEP9D		13.13										
		2-Wire VG Loop/2-Wire Voice Grade Port (Centrex)Port Combo - Non-Design		2	UEP9D		23.75										
		2-Wire VG Loop/2-Wire Voice Grade Port (Centrex)Port Combo - Non-Design		3	UEP9D		49.62										
	UNE Port/Loop Combination Rates (Design)																
		2-Wire VG Loop/2-Wire Voice Grade Port (Centrex) Port Combo - Design		1	UEP9D		16.29										
		2-Wire VG Loop/2-Wire Voice Grade Port (Centrex)Port Combo - Design		2	UEP9D		26.71										
		2-Wire VG Loop/2-Wire Voice Grade Port (Centrex)Port Combo - Design		3	UEP9D		51.82										
	UNE Loop Rate																
		2-Wire Voice Grade Loop (SL 1) - Zone 1		1	UEP9D	UECS1	11.77										
		2-Wire Voice Grade Loop (SL 1) - Zone 2		2	UEP9D	UECS1	22.39										
		2-Wire Voice Grade Loop (SL 1) - Zone 3		3	UEP9D	UECS1	48.26										
		2-Wire Voice Grade Loop (SL 2) - Zone 1		1	UEP9D	UECS2	14.93										
		2-Wire Voice Grade Loop (SL 2) - Zone 2		2	UEP9D	UECS2	25.35										
		2-Wire Voice Grade Loop (SL 2) - Zone 3		3	UEP9D	UECS2	50.46										
	UNE Port Rate																
	ALL STATES																
		2-Wire Voice Grade Port (Centrex) Basic Local Area			UEP9D	UEPYA	1.36	38.85	19.08								
		2-Wire Voice Grade Port (Centrex 800 termination)Basic Local Area			UEP9D	UEPYB	1.36	38.85	19.08								
		2-Wire Voice Grade Port (Centrex / EBS-PSET)3Basic Local Area			UEP9D	UEPYC	1.36	38.85	19.08								
		2-Wire Voice Grade Port (Centrex / EBS-M5009)3Basic Local Area			UEP9D	UEPYD	1.36	38.85	19.08								

UNBUNDLED NETWORK ELEMENTS - Louisiana														Attachment: 2		Exhibit: A	
CATEGORY		RATE ELEMENTS	Interim	Zone	BCS	USOC	RATES ($)					Svc Order Submitted Elec per LSR	Svc Order Submitted Manually per LSR	Incremental Charge - Manual Svc Order vs. Electronic-1st	Incremental Charge - Manual Svc Order vs. Electronic-Add'l	Incremental Charge - Manual Svc Order vs. Electronic-Disc 1st	Incremental Charge - Manual Svc Order vs. Electronic-Disc Add'l
							Rec	Nonrecurring		Nonrecurring Disconnect		OSS Rates ($)					
								First	Add'l	First	Add'l	SOMEC	SOMAN	SOMAN	SOMAN	SOMAN	SOMAN
		2-Wire Voice Grade Port (Centrex / EBS-M5209))3 Basic Local Area			UEP9D	UEPYE	1.36	38.85	19.08								
		2-Wire Voice Grade Port (Centrex / EBS-M5112))3 Basic Local Area			UEP9D	UEPYF	1.36	38.85	19.08								
		2-Wire Voice Grade Port (Centrex / EBS-M5312))3Basic Local Area			UEP9D	UEPYG	1.36	38.85	19.08								
		2-Wire Voice Grade Port (Centrex / EBS-M5008))3 Basic Local Area			UEP9D	UEPYT	1.36	38.85	19.08								
		2-Wire Voice Grade Port (Centrex / EBS-M5208))3 Basic Local Area			UEP9D	UEPYU	1.36	38.85	19.08								
		2-Wire Voice Grade Port (Centrex / EBS-M5216))3 Basic Local Area			UEP9D	UEPYV	1.36	38.85	19.08								
		2-Wire Voice Grade Port (Centrex / EBS-M5316))3 Basic Local Area			UEP9D	UEPY3	1.36	38.85	19.08								
		2-Wire Voice Grade Port (Centrex with Caller ID) Basic Local Area			UEP9D	UEPYH	1.36	38.85	19.08								
		2-Wire Voice Grade Port (Centrex/Caller ID/Msg Wtg Lamp Indication))4 Basic Local Area			UEP9D	UEPYW	1.36	38.85	19.08								
		2-Wire Voice Grade Port (Centrex/Msg Wtg Lamp Indication))4 Basic Local Area			UEP9D	UEPYJ	1.36	38.85	19.08								
		2-Wire Voice Grade Port (Centrex from diff Serving Wire Center) 2,3-Basic Local Area			UEP9D	UEPYM	1.36	104.41	67.93								
		2-Wire Voice Grade Port (Centrex/differ SWC /EBS-PSET)2,3,4 Basic Local Area			UEP9D	UEPYO	1.36	104.41	67.93								
		2-Wire Voice Grade Port (Centrex/differ SWC /EBS-M5009)2,3,4 Basic Local Area			UEP9D	UEPYP	1.36	104.41	67.93								
		2-Wire Voice Grade Port (Centrex/differ SWC /EBS-5209)2,3,4 Basic Local Area			UEP9D	UEPYQ	1.36	104.41	67.93								
		2-Wire Voice Grade Port (Centrex/differ SWC /EBS-M5112)2,3,4 Basic Local Area			UEP9D	UEPYR	1.36	104.41	67.93								
		2-Wire Voice Grade Port (Centrex/differ SWC /EBS-M5312)2,3,4 Basic Local Area			UEP9D	UEPYS	1.36	104.41	67.93								
		2-Wire Voice Grade Port (Centrex/differ SWC /EBS-M5008)2,3,4 Basic Local Area			UEP9D	UEPY4	1.36	104.41	67.93								
		2-Wire Voice Grade Port (Centrex/differ SWC /EBS-M5208)2, 3 Basic Local Area			UEP9D	UEPY5	1.36	104.41	67.93								
		2-Wire Voice Grade Port (Centrex/differ SWC /EBS-M5216)2,3,4 Basic Local Area			UEP9D	UEPY6	1.36	104.41	67.93								
		2-Wire Voice Grade Port (Centrex/differ SWC /EBS-M5316)2,3,4 Basic Local Area			UEP9D	UEPY7	1.36	104.41	67.93								
		2-Wire Voice Grade Port, Diff Serving Wire Center - 800 Service Term 2,3			UEP9D	UEPYZ	1.36	104.41	67.93								
		2-Wire Voice Grade Port terminated in on Megalink or equivalent Basic Local Area			UEP9D	UEPY9	1.36	38.85	19.08								
		2-Wire Voice Grade Port Terminated on 800 Service Term Basic Local Area			UEP9D	UEPY2	1.36	38.85	19.08								
	AL, KY, LA, MS, SC, & TN Only																
		2-Wire Voice Grade Port (Centrex)			UEP9D	UEPQA	1.36	38.85	19.08								
		2-Wire Voice Grade Port (Centrex 800 termination)			UEP9D	UEPQB	1.36	38.85	19.08								
		2-Wire Voice Grade Port (Centrex / EBS-PSET)4			UEP9D	UEPQC	1.36	38.85	19.08								
		2-Wire Voice Grade Port (Centrex / EBS-M5009)4			UEP9D	UEPQD	1.36	38.85	19.08								
		2-Wire Voice Grade Port (Centrex / EBS-M5209)4			UEP9D	UEPQE	1.36	38.85	19.08								
		2-Wire Voice Grade Port (Centrex / EBS-M5112)4			UEP9D	UEPQF	1.36	38.85	19.08								
		2-Wire Voice Grade Port (Centrex / EBS-M5312)4			UEP9D	UEPQG	1.36	38.85	19.08								
		2-Wire Voice Grade Port (Centrex / EBS-M5008)4			UEP9D	UEPQT	1.36	38.85	19.08								
		2-Wire Voice Grade Port (Centrex / EBS-M5208)4			UEP9D	UEPQU	1.36	38.85	19.08								
		2-Wire Voice Grade Port (Centrex / EBS-M5216)4			UEP9D	UEPQV	1.36	38.85	19.08								
		2-Wire Voice Grade Port (Centrex / EBS-M5316)4			UEP9D	UEPQ3	1.36	38.85	19.08								
		2-Wire Voice Grade Port (Centrex with Caller ID)			UEP9D	UEPQH	1.36	38.85	19.08								

UNBUNDLED NETWORK ELEMENTS - Louisiana														Attachment: 2		Exhibit: A	
CATEGORY		RATE ELEMENTS	Interim	Zone	BCS	USOC	RATES ($)					Svc Order Submitted Elec per LSR	Svc Order Submitted Manually per LSR	Incremental Charge - Manual Svc Order vs. Electronic-1st	Incremental Charge - Manual Svc Order vs. Electronic-Add'l	Incremental Charge - Manual Svc Order vs. Electronic-Disc 1st	Incremental Charge - Manual Svc Order vs. Electronic-Disc Add'l
							Rec	Nonrecurring		Nonrecurring Disconnect		OSS Rates ($)					
								First	Add'l	First	Add'l	SOMEC	SOMAN	SOMAN	SOMAN	SOMAN	SOMAN
		2-Wire Voice Grade Port (Centrex/Caller ID/Msg Wtg Lamp Indication)4			UEP9D	UEPQW	1.36	38.85	19.08								
		2-Wire Voice Grade Port (Centrex/Msg Wtg Lamp Indication)4			UEP9D	UEPQJ	1.36	38.85	19.08								
		2-Wire Voice Grade Port (Centrex from diff Serving Wire Center) 2,3			UEP9D	UEPQM	1.36	104.41	67.93								
		2-Wire Voice Grade Port (Centrex/differ SWC /EBS-PSET)2,3,4			UEP9D	UEPQO	1.36	104.41	67.93								
		2-Wire Voice Grade Port (Centrex/differ SWC /EBS-M5009)2,3,4			UEP9D	UEPQP	1.36	104.41	67.93								
		2-Wire Voice Grade Port (Centrex/differ SWC /EBS-5209)2,3,4			UEP9D	UEPQQ	1.36	104.41	67.93								
		2-Wire Voice Grade Port (Centrex/differ SWC /EBS-M5112)2,3,4			UEP9D	UEPQR	1.36	104.41	67.93								
		2-Wire Voice Grade Port (Centrex/differ SWC /EBS-M5312)2,3,4			UEP9D	UEPQS	1.36	104.41	67.93								
		2-Wire Voice Grade Port (Centrex/differ SWC /EBS-M5008)2,3,4			UEP9D	UEPQ4	1.36	104.41	67.93								
		2-Wire Voice Grade Port (Centrex/differ SWC /EBS-M5208)2,3,4			UEP9D	UEPQ5	1.36	104.41	67.93								
		2-Wire Voice Grade Port (Centrex/differ SWC /EBS-M5216)2,3,4			UEP9D	UEPQ6	1.36	104.41	67.93								
		2-Wire Voice Grade Port (Centrex/differ SWC /EBS-M5316)2,3,4			UEP9D	UEPQ7	1.36	104.41	67.93								
		2-Wire Voice Grade Port, Diff Serving Wire Center - 800 Service Term 2,3			UEP9D	UEPQZ	1.36	104.41	67.93								
		2-Wire Voice Grade Port terminated in on Megalink or equivalent			UEP9D	UEPQ9	1.36	38.85	19.08								
		2-Wire Voice Grade Port Terminated on 800 Service Term			UEP9D	UEPQ2	1.36	38.85	19.08								
	Local Switching																
		Centrex Intercom Funtionality, per port			UEP9D	URECS	0.8577										
	Local Number Portability																
		Local Number Portability (1 per port)			UEP9D	LNPCC	0.35										
	Features																
		All Standard Features Offered, per port			UEP9D	UEPVF	0.00										
		All Select Features Offered, per port			UEP9D	UEPVS	0.00	412.25									
		All Centrex Control Features Offered, per port			UEP9D	UEPVC	0.00										
	NARS																
		Unbundled Network Access Register - Combination			UEP9D	UARCX	0.00	0.00	0.00	0.00	0.00						
		Unbundled Network Access Register - Inward			UEP9D	UAR1X	0.00	0.00	0.00	0.00	0.00						
		Unbundled Network Access Register - Outdial			UEP9D	UAROX	0.00	0.00	0.00	0.00	0.00						
	Miscellaneous Terminations																
	2-Wire Trunk Side																
		Trunk Side Terminations, each			UEP9D	CEND6	8.29	115.85	18.20								
	4-Wire Digital (1.544 Megabits)																
		DS1 Circuit Terminations, each			UEP9D	M1HD1	68.47	196.18	98.62								
		DS0 Channels Activiated per Channel			UEP9D	M1HDO	0.00	14.06									
	Interoffice Channel Mileage - 2-Wire																
		Interoffice Channel Facilities Termination			UEP9D	M1GBC	22.60	39.36	26.62								
		Interoffice Channel mileage, per mile or fraction of mile			UEP9D	M1GBM	0.013										
	Feature Activations (DS0) Centrex Loops on Channelized DS1 Service																
	D4 Channel Bank Feature Activations																
		Feature Activation on D-4 Channel Bank Centrex Loop Slot			UEP9D	1PQWS	0.6497										
		Feature Activation on D-4 Channel Bank FX line Side Loop Slot			UEP9D	1PQW6	0.6497										
		Feature Activation on D-4 Channel Bank FX Trunk Side Loop Slot			UEP9D	1PQW7	0.6497										
		Feature Activation on D-4 Channel Bank Centrex Loop Slot - Different Wire Center			UEP9D	1PQWP	0.6497										

UNBUNDLED NETWORK ELEMENTS - Louisiana														Attachment: 2		Exhibit: A	
CATEGORY		RATE ELEMENTS	Interim	Zone	BCS	USOC	RATES ($)					Svc Order Submitted Elec per LSR	Svc Order Submitted Manually per LSR	Incremental Charge - Manual Svc Order vs. Electronic-1st	Incremental Charge - Manual Svc Order vs. Electronic-Add'l	Incremental Charge - Manual Svc Order vs. Electronic-Disc 1st	Incremental Charge - Manual Svc Order vs. Electronic-Disc Add'l
							Rec	Nonrecurring		Nonrecurring Disconnect		OSS Rates ($)					
								First	Add'l	First	Add'l	SOMEC	SOMAN	SOMAN	SOMAN	SOMAN	SOMAN
		Feature Activation on D-4 Channel Bank Private Line Loop Slot			UEP9D	1PQWV	0.6497										
		Feature Activation on D-4 Channel Bank Tjie Line/Trunk Loop Slot			UEP9D	1PQWQ	0.6497										
		Feature Activation on D-4 Channel Bank WATS Loop Slot			UEP9D	1PQWA	0.6497										
	Non-Recurring Charges (NRC) Associated with UNE-P Centrex																
		NRC Conversion Currently Combined Switch-As-Is with allowed changes, per port			UEP9D	USAC2		0.10	0.10								
		Conversion of existing Centrex Common Block, each			UEP9D	USACN		36.66	16.10								
		New Centrex Standard Common Block			UEP9D	M1ACS	0.00	680.40									
		New Centrex Customized Common Block			UEP9D	M1ACC	0.00	680.40									
		NAR Establishment Charge, Per Occasion			UEP9D	URECA	0.00	73.93									
	Additional Non-Recurring Charges (NRC)																
		Unbundled Miscellaneous Rate Element, Tag Loop at End Use Premise			UEP9D	URETL		8.33	0.83								
		Unbundled Miscellaneous Rate Element, Tag Design Loop at End Use Premise			UEP9D	URETN		11.20	1.10								
	UNE-P CENTREX - EWSD (Valid in AL, FL, KY, LA, MS & TN)																
	2-Wire VG Loop/2-Wire Voice Grade Port (Centrex) Combo																
	UNE Port/Loop Combination Rates (Non-Design)																
		2-Wire VG Loop/2-Wire Voice Grade Port (Centrex) Port Combo - Non-Design		1	UEP9E		13.13										
		2-Wire VG Loop/2-Wire Voice Grade Port (Centrex)Port Combo - Non-Design		2	UEP9E		23.75										
		2-Wire VG Loop/2-Wire Voice Grade Port (Centrex)Port Combo - Non-Design		3	UEP9E		49.62										
	UNE Port/Loop Combination Rates (Design)																
		2-Wire VG Loop/2-Wire Voice Grade Port (Centrex) Port Combo - Design		1	UEP9E		16.29										
		2-Wire VG Loop/2-Wire Voice Grade Port (Centrex)Port Combo - Design		2	UEP9E		26.71										
		2-Wire VG Loop/2-Wire Voice Grade Port (Centrex)Port Combo - Design		3	UEP9E		51.82										
	UNE Loop Rate																
		2-Wire Voice Grade Loop (SL 1) - Zone 1		1	UEP9E	UECS1	11.77										
		2-Wire Voice Grade Loop (SL 1) - Zone 2		2	UEP9E	UECS1	22.39										
		2-Wire Voice Grade Loop (SL 1) - Zone 3		3	UEP9E	UECS1	48.26										
		2-Wire Voice Grade Loop (SL 2) - Zone 1		1	UEP9E	UECS2	14.93										
		2-Wire Voice Grade Loop (SL 2) - Zone 2		2	UEP9E	UECS2	25.35										
		2-Wire Voice Grade Loop (SL 2) - Zone 3		3	UEP9E	UECS2	50.46										
	UNE Port Rate																
	AL, FL, KY, LA, MS, & TN only																
		2-Wire Voice Grade Port (Centrex) Basic Local Area			UEP9E	UEPYA	1.36	38.85	19.08								
		2-Wire Voice Grade Port (Centrex 800 termination)Basic Local Area			UEP9E	UEPYB	1.36	38.85	19.08								
		2-Wire Voice Grade Port (Centrex with Caller ID)1Basic Local Area			UEP9E	UEPYH	1.36	38.85	19.08								
		2-Wire Voice Grade Port (Centrex from diff Serving Wire Center)2,3 Basic Local Area			UEP9E	UEPYM	1.36	104.41	67.93								
		2-Wire Voice Grade Port, Diff Serving Wire Center 2,3 - 800 Service Term - Basic Local Area			UEP9E	UEPYZ	1.36	104.41	67.93								
		2-Wire Voice Grade Port terminated in on Megalink or equivalent - Basic Local Area			UEP9E	UEPY9	1.36	38.85	19.08								
		2-Wire Voice Grade Port Terminated on 800 Service Term - Basic Local Area			UEP9E	UEPY2	1.36	38.85	19.08								
	AL, KY, LA, MS, & TN Only																
		2-Wire Voice Grade Port (Centrex)			UEP9E	UEPQA	1.36	38.85	19.08								
		2-Wire Voice Grade Port (Centrex 800 termination)			UEP9E	UEPQB	1.36	38.85	19.08								
		2-Wire Voice Grade Port (Centrex with Caller ID)1			UEP9E	UEPQH	1.36	38.85	19.08								

UNBUNDLED NETWORK ELEMENTS - Louisiana														Attachment: 2		Exhibit: A	
CATEGORY		RATE ELEMENTS	Interim	Zone	BCS	USOC	RATES ($)					Svc Order Submitted Elec per LSR	Svc Order Submitted Manually per LSR	Incremental Charge - Manual Svc Order vs. Electronic-1st	Incremental Charge - Manual Svc Order vs. Electronic-Add'l	Incremental Charge - Manual Svc Order vs. Electronic-Disc 1st	Incremental Charge - Manual Svc Order vs. Electronic-Disc Add'l
							Rec	Nonrecurring		Nonrecurring Disconnect		OSS Rates ($)					
								First	Add'l	First	Add'l	SOMEC	SOMAN	SOMAN	SOMAN	SOMAN	SOMAN
		2-Wire Voice Grade Port (Centrex from diff Serving Wire Center)2,3			UEP9E	UEPQM	1.36	104.41	67.93								
		2-Wire Voice Grade Port, Diff Serving Wire Center 2,3 - 800 Service Term			UEP9E	UEPQZ	1.36	104.41	67.93								
		2-Wire Voice Grade Port terminated in on Megalink or equivalent			UEP9E	UEPQ9	1.36	38.85	19.08								
		2-Wire Voice Grade Port Terminated on 800 Service Term			UEP9E	UEPQ2	1.36	38.85	19.08								
	Local Switching																
		Centrex Intercom Funtionality, per port			UEP9E	URECS	0.8577										
	Local Number Portability																
		Local Number Portability (1 per port)			UEP9E	LNPCC	0.35										
	Features																
		All Standard Features Offered, per port			UEP9E	UEPVF	0.00										
		All Select Features Offered, per port			UEP9E	UEPVS	0.00	412.25									
		All Centrex Control Features Offered, per port			UEP9E	UEPVC	0.00										
	NARS																
		Unbundled Network Access Register - Combination			UEP9E	UARCX	0.00	0.00	0.00	0.00	0.00						
		Unbundled Network Access Register - Indial			UEP9E	UAR1X	0.00	0.00	0.00	0.00	0.00						
		Unbundled Network Access Register - Outdial			UEP9E	UAROX	0.00	0.00	0.00	0.00	0.00						
	Miscellaneous Terminations																
	2-Wire Trunk Side																
		Trunk Side Terminations, each			UEP9E	CEND6	8.29	115.85	18.20								
	4-Wire Digital (1.544 Megabits)																
		DS1 Circuit Terminations, each			UEP9E	M1HD1	68.47	196.18	92.92								
		DS0 Channel Activated Per Channel			UEP9E	M1HDO	0.00	14.06									
	Interoffice Channel Mileage - 2-Wire																
		Interoffice Channel Facilities Termination			UEP9E	M1GBC	22.60	39.36	26.62								
		Interoffice Channel mileage, per mile or fraction of mile			UEP9E	M1GBM	0.013										
	Feature Activations (DS0) Centrex Loops on Channelized DS1 Service																
	D4 Channel Bank Feature Activations																
		Feature Activation on D-4 Channel Bank Centrex Loop Slot			UEP9E	1PQWS	0.6497										
		Feature Activation on D-4 Channel Bank FX line Side Loop Slot			UEP9E	1PQW6	0.6497										
		Feature Activation on D-4 Channel Bank FX Trunk Side Loop Slot			UEP9E	1PQW7	0.6497										
		Feature Activation on D-4 Channel Bank Centrex Loop Slot - Different Wire Center			UEP9E	1PQWP	0.6497										
		Feature Activation on D-4 Channel Bank Private Line Loop Slot			UEP9E	1PQWV	0.6497										
		Feature Activation on D-4 Channel Bank Tjie Line/Trunk Loop Slot			UEP9E	1PQWQ	0.6497										
		Feature Activation on D-4 Channel Bank WATS Loop Slot			UEP9E	1PQWA	0.6497										
	Non-Recurring Charges (NRC) Associated with UNE-P Centrex																
		NRC Conversion Currently Combined Switch-As-Is with allowed changes, per port			UEP9E	USAC2		0.10	0.10								
		Conversion of Existing Centrex Common Block, each			UEP9E	USACN		36.66	16.10								
		New Centrex Standard Common Block			UEP9E	M1ACS	0.00	680.40									
		New Centrex Customized Common Block			UEP9E	M1ACC	0.00	680.40									
		NAR Establishment Charge, Per Occasion			UEP9E	URECA	0.00	73.93									
	Additional Non-Recurring Charges (NRC)																
		Unbundled Miscellaneous Rate Element, Tag Loop at End Use Premise			UEP9E	URETL		8.33	0.83								
		Unbundled Miscellaneous Rate Element, Tag Design Loop at End Use Premise			UEP9E	URETN		11.20	1.10								
	UNE-P CENTREX - DCO - Valid in AL, KY, LA, MS, & TN)																
	2-Wire VG Loop/2-Wire Voice Grade Port (Centrex) Combo																
	UNE Port/Loop Combination Rates (Non-Design)																
		2-Wire VG Loop/2-Wire Voice Grade Port (Centrex) Port Combo - Non-Design		1	UEP93		13.13										

UNBUNDLED NETWORK ELEMENTS - Louisiana														Attachment: 2		Exhibit: A	
CATEGORY	RATE ELEMENTS	Interim	Zone	BCS	USOC	RATES ($)					Svc Order Submitted Elec per LSR	Svc Order Submitted Manually per LSR	Incremental Charge - Manual Svc Order vs. Electronic-1st	Incremental Charge - Manual Svc Order vs. Electronic-Add'l	Incremental Charge - Manual Svc Order vs. Electronic-Disc 1st	Incremental Charge - Manual Svc Order vs. Electronic-Disc Add'l
						Rec	Nonrecurring		Nonrecurring Disconnect		OSS Rates ($)					
							First	Add'l	First	Add'l	SOMEC	SOMAN	SOMAN	SOMAN	SOMAN	SOMAN
	2-Wire VG Loop/2-Wire Voice Grade Port (Centrex)Port Combo - Non-Design		2	UEP93		23.75										
	2-Wire VG Loop/2-Wire Voice Grade Port (Centrex)Port Combo - Non-Design		3	UEP93		49.62										
UNE Port/Loop Combination Rates (Design)																
	2-Wire VG Loop/2-Wire Voice Grade Port (Centrex) Port Combo - Design		1	UEP93		16.29										
	2-Wire VG Loop/2-Wire Voice Grade Port (Centrex)Port Combo - Design		2	UEP93		26.71										
	2-Wire VG Loop/2-Wire Voice Grade Port (Centrex)Port Combo - Design		3	UEP93		51.82										
UNE Loop Rate																
	2-Wire Voice Grade Loop (SL 1) - Zone 1		1	UEP93	UECS1	11.77										
	2-Wire Voice Grade Loop (SL 1) - Zone 2		2	UEP93	UECS1	22.36										
	2-Wire Voice Grade Loop (SL 1) - Zone 3		3	UEP93	UECS1	48.26										
	2-Wire Voice Grade Loop (SL 2) - Zone 1		1	UEP93	UECS2	14.93										
	2-Wire Voice Grade Loop (SL 2) - Zone 2		2	UEP93	UECS2	25.35										
	2-Wire Voice Grade Loop (SL 2) - Zone 3		3	UEP93	UECS2	50.46										
UNE Port Rate																
AL, KY, LA, MS, & TN only																
	2-Wire Voice Grade Port (Centrex) Basic Local Area			UEP93	UEPYA	1.36	38.85	19.08								
	2-Wire Voice Grade Port (Centrex 800 termination)Basic Local Area			UEP93	UEPYB	1.36	38.85	19.08								
	2-Wire Voice Grade Port (Centrex with Caller ID)1Basic Local Area			UEP93	UEPYH	1.36	38.85	19.08								
	2-Wire Voice Grade Port (Centrex from diff Serving Wire Center)2,3 Basic Local Area			UEP93	UEPYM	1.36	104.41	67.93								
	2-Wire Voice Grade Port, Diff Serving Wire Center - 2,3 - 800 Service Term - Basic Local Area			UEP93	UEPYZ	1.36	104.41	67.93								
	2-Wire Voice Grade Port terminated in on Megalink or equivalent - Basic Local Area			UEP93	UEPY9	1.36	38.85	19.08								
	2-Wire Voice Grade Port Terminated on 800 Service Term - Basic Local Area			UEP93	UEPY2	1.36	38.85	19.08								
	2-Wire Voice Grade Port (Centrex)			UEP93	UEPQA	1.36	38.85	19.08								
	2-Wire Voice Grade Port (Centrex 800 termination)			UEP93	UEPQB	1.36	38.85	19.08								
	2-Wire Voice Grade Port (Centrex with Caller ID)1			UEP93	UEPQH	1.36	38.85	19.08								
	2-Wire Voice Grade Port (Centrex from diff Serving Wire Center)2,3			UEP93	UEPQM	1.36	104.41	67.93								
	2-Wire Voice Grade Port, Diff Serving Wire Center - 2,3 -800 Service Term			UEP93	UEPQZ	1.36	104.41	67.93								
	2-Wire Voice Grade Port terminated in on Megalink or equivalent			UEP93	UEPQ9	1.36	38.85	19.08								
	2-Wire Voice Grade Port Terminated on 800 Service Term			UEP93	UEPQ2	1.36	38.85	19.08								
Local Switching																
	Centrex Intercom Funtionality, per port			UEP93	URECS	0.8577										
Local Number Portability																
	Local Number Portability (1 per port)			UEP93	LNPCC	0.35										
Features																
	All Standard Features Offered, per port			UEP93	UEPVF	0.00	73.93	27.14								
	All Centrex Control Features Offered, per port			UEP93	UEPVC	0.00	73.93	27.14								
NARS																
	Unbundled Network Access Register - Combination			UEP93	UARCX	0.00	0.00	0.00	0.00	0.00						
	Unbundled Network Access Register - Indial			UEP93	UAR1X	0.00	0.00	0.00	0.00	0.00						
	Unbundled Network Access Register - Outdial			UEP93	UAROX	0.00	0.00	0.00	0.00	0.00						
Miscellaneous Terminations																
2-Wire Trunk Side																
	Trunk Side Terminations, each			UEP93	CEND6	8.27	115.85	18.20								
4-Wire Digital (1.544 Megabits)																
	DS1 Circuit Terminations, each			UEP93	M1HD1	68.47	196.18	92.92								

UNBUNDLED NETWORK ELEMENTS - Louisiana														Attachment: 2		Exhibit: A	
CATEGORY		RATE ELEMENTS	Interim	Zone	BCS	USOC	RATES ($)					Svc Order Submitted Elec per LSR	Svc Order Submitted Manually per LSR	Incremental Charge - Manual Svc Order vs. Electronic-1st	Incremental Charge - Manual Svc Order vs. Electronic-Add'l	Incremental Charge - Manual Svc Order vs. Electronic-Disc 1st	Incremental Charge - Manual Svc Order vs. Electronic-Disc Add'l
							Rec	Nonrecurring		Nonrecurring Disconnect		OSS Rates ($)					
								First	Add'l	First	Add'l	SOMEC	SOMAN	SOMAN	SOMAN	SOMAN	SOMAN
		DS0 Channels Activated, Per Channel			UEP93	M1HDO	0.00	14.06									
	Interoffice Channel Mileage - 2-Wire																
		Interoffice Channel Facilities Termination			UEP93	M1GBC	22.60	39.36	26.62								
		Interoffice Channel mileage, per mile or fraction of mile			UEP93	M1GBM	0.013										
	Feature Activations (DS0) Centrex Loops on Channelized DS1 Service																
	D4 Channel Bank Feature Activations																
		Feature Activation on D-4 Channel Bank Centrex Loop Slot			UEP93	1PQWS	0.6497										
		Feature Activation on D-4 Channel Bank FX Line Side Loop Slot			UEP93	1PQW6	0.6497										
		Feature Activation on D-4 Channel Bank FX Trunk Side Loop Slot			UEP93	1PQW7	0.6497										
		Feature Activation on D-4 Channel Bank Centrex Loop Slot - Different Wire Center			UEP93	1PQWP	0.6497										
		Feature Activation on D-4 Channel Bank Private Line Loop Slot			UEP93	1PQWV	0.6497										
		Feature Activation on D-4 Channel Bank Tie Line/Trunk Loop Slot			UEP93	1PQWQ	0.6497										
		Feature Activation on D-4 Channel Bank WATS Loop Slot			UEP93	1PQWA	0.6497										
	Non-Recurring Charges (NRC) Associated with UNE-P Centrex																
		NRC Conversion Currently Combined Switch-As-Is with allowed changes, per port			UEP93	USAC2		0.10	0.10								
		Conversion of Existing Centrex Common Block, each			UEP93	USACN		36.66	16.10								
		New Centrex Standard Common Block			UEP93	M1ACS	0.00	680.40									
		New Centrex Customized Common Block			UEP93	M1ACC	0.00	680.40									
		NAR Establishment Charge, Per Occasion			UEP93	URECA	0.00	73.93									
	Additional Non-Recurring Charges (NRC)																
		Unbundled Miscellaneous Rate Element, Tag Loop at End Use Premise			UEP93	URETL		8.33	0.83								
		Unbundled Miscellaneous Rate Element, Tag Design Loop at End Use Premise			UEP93	URETN		11.20	1.10								
	Note 1 - Required Port for Centrex Control in 1AESS, 5ESS & EWSD																
	Note 2 - Requres Interoffice Channel Mileage																
	Note 3 - Installation is combination of Installation charge for SL2 Loop and Port																
	Note 4 - Requires Specific Customer Premises Equipment																
	Note: Rates displaying an "R" in Interim column are interim and subject to rate true-up as set forth in General Terms and Conditions.																

UNBUNDLED NETWORK ELEMENTS - Mississippi														Attachment: 2		Exhibit: A	
CATEGORY		RATE ELEMENTS	Interim	Zone	BCS	USOC	RATES ($)					Svc Order Submitted Elec per LSR	Svc Order Submitted Manually per LSR	Incremental Charge - Manual Svc Order vs. Electronic-1st	Incremental Charge - Manual Svc Order vs. Electronic-Add'l	Incremental Charge - Manual Svc Order vs. Electronic-Disc 1st	Incremental Charge - Manual Svc Order vs. Electronic-Disc Add'l
							Rec	Nonrecurring		Nonrecurring Disconnect		OSS Rates ($)					
								First	Add'l	First	Add'l	SOMEC	SOMAN	SOMAN	SOMAN	SOMAN	SOMAN
	The "Zone" shown in the sections for stand-alone loops or loops as part of a combination refers to Geographically Deaveraged UNE Zones. To view Geographically Deaveraged UNE Zone Designations by Central Office, refer to internet Website: http://www.interconnection.bellsouth.com/become_a_clec/html/interconnection.htm																
OPERATIONAL SUPPORT SYSTEMS (OSS) - "REGIONAL RATES"																	
	NOTE: (1) CLEC should contact its contract negotiator if it prefers the "state specific" OSS charges as ordered by the State Commissions. The OSS charges currently contained in this rate exhibit are the BellSouth "regional" service ordering charges. CLEC may elect either the state specific Commission ordered rates for the service ordering charges, or CLEC may elect the regional service ordering charge, however, CLEC can not obtain a mixture of the two regardless if CLEC has a interconnection contract established in each of the 9 states.																
	NOTE: (2) Any element that can be ordered electronically will be billed according to the SOMEC rate listed in this category. Please refer to BellSouth's Local Ordering Handbook (LOH) to determine if a product can be ordered electronically. For those elements that cannot be ordered electronically at present per the LOH, the listed SOMEC rate in this category reflects the charge that would be billed to a CLEC once electronic ordering capabilities come on-line for that element. Otherwise, the manual ordering charge, SOMAN, will be applied to a CLECs bill when it submits an LSR to BellSouth.																
		OSS - Electronic Service Order Charge, Per Local Service Request (LSR) - UNE Only				SOMEC		3.50	0.00	3.50	0.00						
		OSS - Manual Service Order Charge, Per Local Service Request (LSR) - UNE Only				SOMAN		15.75	0.00	1.97	0.00						
UNE SERVICE DATE ADVANCEMENT CHARGE																	
	NOTE: The Expedite charge will be maintained commensurate with BellSouth's FCC No.1 Tariff, Section 5 as applicable.																
		UNE Expedite Charge per Circuit or Line Assignable USOC, per Day			UAL, UEANL, UCL, UEF, UDF, UEQ, UDL, UENTW, UDN, UEA, UHL, ULC, USL, U1T12, U1T48, U1TD1, U1TD3, U1TDX, U1TO3, U1TS1, U1TVX, UC1BC, UC1BL, UC1CC, UC1CL, UC1DC, UC1DL, UC1EC, UC1EL, UC1FC, UC1FL, UC1GC, UC1GL, UC1HC, UC1HL, UDL12, UDL48, UDLO3, UDLSX, UE3, ULD12, ULD48, ULDD1, ULDD3, ULDDX, ULDO3, ULDS1, ULDVX, UNC1X, UNC3X, UNCDX, UNCNX, UNCSX, UNCVX, UNLD1, UNLD3, UXTD1, UXTD3, UXTS1, U1TUC, U1TUD, U1TUB, U1TUA	SDASP		200.00									
UNBUNDLED EXCHANGE ACCESS LOOP																	
	2-WIRE ANALOG VOICE GRADE LOOP																
		2-Wire Analog Voice Grade Loop - Service Level 1- Zone 1		1	UEANL	UEAL2	12.03	37.92	17.55	23.48	5.25						
		2-Wire Analog Voice Grade Loop - Service Level 1- Zone 2		2	UEANL	UEAL2	16.87	37.92	17.55	23.48	5.25						
		2-Wire Analog Voice Grade Loop - Service Level 1- Zone 3		3	UEANL	UEAL2	25.68	37.92	17.55	23.48	5.25						
		2-Wire Analog Voice Grade Loop - Service Level 1-Zone 4		4	UEANL	UEAL2	43.85	37.92	17.55	23.48	5.25						
		2-Wire Analog Voice Grade Loop - Service Level 1- Zone 1		1	UEANL	UEASL	12.03	37.92	17.55	23.48	5.25						
		2-Wire Analog Voice Grade Loop - Service Level 1- Zone 2		2	UEANL	UEASL	16.87	37.92	17.55	23.48	5.25						
		2-Wire Analog Voice Grade Loop - Service Level 1- Zone 3		3	UEANL	UEASL	25.68	37.92	17.55	23.48	5.25						
		2-Wire Analog Voice Grade Loop - Service Level 1-Zone 4		4	UEANL	UEASL	43.85	37.92	17.55	23.48	5.25						
		Unbundled Miscellaneous Rate Element, Tag Loop at End User Premise			UEANL	URETL		8.33	0.83								
		Loop Testing - Basic 1st Half Hour			UEANL	URET1		34.36	34.36								

UNBUNDLED NETWORK ELEMENTS - Mississippi														Attachment: 2		Exhibit: A	
CATEGORY		RATE ELEMENTS	Interim	Zone	BCS	USOC	RATES ($)					Svc Order Submitted Elec per LSR	Svc Order Submitted Manually per LSR	Incremental Charge - Manual Svc Order vs. Electronic-1st	Incremental Charge - Manual Svc Order vs. Electronic-Add'l	Incremental Charge - Manual Svc Order vs. Electronic-Disc 1st	Incremental Charge - Manual Svc Order vs. Electronic-Disc Add'l
							Rec	Nonrecurring		Nonrecurring Disconnect		OSS Rates ($)					
								First	Add'l	First	Add'l	SOMEC	SOMAN	SOMAN	SOMAN	SOMAN	SOMAN
		Loop Testing - Basic Additional Half Hour			UEANL	URETA		19.97	19.97								
		CLEC to CLEC Conversion Charge Without Outside Dispatch			UEANL	UREWO		15.75	8.92								
		Unbundled Voice Loop, Non-Design Voice Loop, billing for BST providing make-up (Engineering Information - E.I.)			UEANL	UEANM		13.51	13.51								
		Manual Order Coordination for UVL-SL1s (per loop)			UEANL	UEAMC		8.20	8.20								
		Order Coordination for Specified Conversion Time for UVL-SL1 (per LSR)			UEANL	OCOSL		18.19	18.19								
	2-WIRE Unbundled COPPER LOOP																
		2-Wire Unbundled Copper Loop - Non-Designed Zone 1	I	1	UEQ	UEQ2X	11.01	36.53	16.16	22.66	4.42						
		2 Wire Unbundled Copper Loop - Non-Designed - Zone 2	I	2	UEQ	UEQ2X	11.51	36.53	16.16	22.66	4.42						
		2 Wire Unbundled Copper Loop - Non-Designed - Zone 3	I	3	UEQ	UEQ2X	11.57	36.53	16.16	22.66	4.42						
		2 Wire Unbundled Copper Loop - Non-Designed - Zone 4	I	4	UEQ	UEQ2X	13.10	36.53	16.16	22.66	4.42						
		Unbundled Miscellaneous Rate Element, Tag Loop at End User Premise			UEQ	URETL		8.33	0.83								
		Manual Order Coordination 2 Wire Unbundled Copper Loop - Non-Designed (per loop)			UEQ	USBMC		8.20	8.20								
		Unbundled Copper Loop, Non-Design Copper Loop, billing for BST providing make-up (Engineering Information - E.I.)			UEQ	UEQMU		13.51	13.51								
		Loop Testing - Basic 1st Half Hour			UEQ	URET1		34.36	34.36								
		Loop Testing - Basic Additional Half Hour			UEQ	URETA		19.97	19.97								
		CLEC to CLEC Conversion Charge Without Outside Dispatch			UEQ	UREWO		14.24	7.42								
UNBUNDLED EXCHANGE ACCESS LOOP																	
	2-WIRE ANALOG VOICE GRADE LOOP																
		2 Wire Analog Voice Grade Loop-Service Level 1-Line Splitting-Zone 1		1	UEPSR UEPSB	UEALS	12.03	37.92	17.55	23.48	5.25						
		2 Wire Analog Voice Grade Loop-Service Level 1-Line Splitting-Zone 1		1	UEPSR UEPSB	UEABS	12.03	37.92	17.55	23.48	5.25						
		2 Wire Analog Voice Grade Loop- Service Level 1-Line Splitting-Zone 2		2	UEPSR UEPSB	UEALS	16.87	37.92	17.55	23.48	5.25						
		2 Wire Analog Voice Grade Loop- Service Level 1-Line Splitting-Zone 2		2	UEPSR UEPSB	UEABS	16.87	37.92	17.55	23.48	5.25						
		2 Wire Analog Voice Grade Loop-Service Level 1-Line Splitting-Zone 3		3	UEPSR UEPSB	UEALS	25.68	37.92	17.55	23.48	5.25						
		2 Wire Analog Voice Grade Loop-Service Level 1-Line Splitting-Zone 3		3	UEPSR UEPSB	UEABS	25.68	37.92	17.55	23.48	5.25						
		2 Wire Analog Voice Grade Loop-Service Level 1-Line Splitting-Zone 4		4	UEPSR UEPSB	UEALS	43.85	37.92	17.55	23.48	5.25						
		2 Wire Analog Voice Grade Loop-Service Level 1-Line Splitting-Zone 4		4	UEPSR UEPSB	UEABS	43.85	37.92	17.55	23.48	5.25						
UNBUNDLED EXCHANGE ACCESS LOOP																	
	2-WIRE ANALOG VOICE GRADE LOOP																
		2-Wire Analog Voice Grade Loop - Service Level 2 w/Loop or Ground Start Signaling - Zone 1		1	UEA	UEAL2	13.89	105.96	68.28	52.82	10.37						
		2-Wire Analog Voice Grade Loop - Service Level 2 w/Loop or Ground Start Signaling - Zone 2		2	UEA	UEAL2	18.75	105.96	68.28	52.82	10.37						
		2-Wire Analog Voice Grade Loop - Service Level 2 w/Loop or Ground Start Signaling - Zone 3		3	UEA	UEAL2	27.55	105.96	68.28	52.82	10.37						
		2-Wire Analog Voice Grade Loop - Service Level 2 w/Loop or Ground Start Signaling - Zone 4		4	UEA	UEAL2	45.72	105.96	68.28	52.82	10.37						
		Order Coordination for Specified Conversion Time (per LSR)			UEA	OCOSL		18.19									
		2-Wire Analog Voice Grade Loop - Service Level 2 w/Reverse Battery Signaling - Zone 1		1	UEA	UEAR2	13.89	105.96	68.28	52.82	10.37						
		2-Wire Analog Voice Grade Loop - Service Level 2 w/Reverse Battery Signaling - Zone 2		2	UEA	UEAR2	18.75	105.96	68.28	52.82	10.37						
		2-Wire Analog Voice Grade Loop - Service Level 2 w/Reverse Battery Signaling - Zone 3		3	UEA	UEAR2	27.55	105.96	68.28	52.82	10.37						
		2-Wire Analog Voice Grade Loop - Service Level 2 w/Reverse Battery Signaling - Zone 4		4	UEA	UEAR2	45.72	105.96	68.28	52.82	10.37						
		Order Coordination for Specified Conversion Time (per LSR)			UEA	OCOSL		18.19									

UNBUNDLED NETWORK ELEMENTS - Mississippi														Attachment: 2		Exhibit: A	
CATEGORY	RATE ELEMENTS	Interim	Zone	BCS	USOC	RATES ($)					Svc Order Submitted Elec per LSR	Svc Order Submitted Manually per LSR	Incremental Charge - Manual Svc Order vs. Electronic-1st	Incremental Charge - Manual Svc Order vs. Electronic-Add'l	Incremental Charge - Manual Svc Order vs. Electronic-Disc 1st	Incremental Charge - Manual Svc Order vs. Electronic-Disc Add'l
						Rec	Nonrecurring		Nonrecurring Disconnect		OSS Rates ($)					
							First	Add'l	First	Add'l	SOMEC	SOMAN	SOMAN	SOMAN	SOMAN	SOMAN
	CLEC to CLEC Conversion Charge without outside dispatch			UEA	UREWO		87.56	36.29								
	Loop Tagging - Service Level 2 (SL2)			UEA	URETL		11.19	1.10								
4-WIRE ANALOG VOICE GRADE LOOP																
	4-Wire Analog Voice Grade Loop - Zone 1		1	UEA	UEAL4	27.47	132.27	94.59	60.68	14.64						
	4-Wire Analog Voice Grade Loop - Zone 2		2	UEA	UEAL4	38.26	132.27	94.59	60.68	14.64						
	4-Wire Analog Voice Grade Loop - Zone 3		3	UEA	UEAL4	50.03	132.27	94.59	60.68	14.64						
	4-Wire Analog Voice Grade Loop - Zone 4		4	UEA	UEAL4	50.03	132.27	94.59	60.68	14.64						
	Order Coordination for Specified Conversion Time (per LSR)			UEA	OCOSL		18.19									
	CLEC to CLEC Conversion Charge without outside dispatch			UEA	UREWO		87.56	36.29								
2-WIRE ISDN DIGITAL GRADE LOOP																
	2-Wire ISDN Digital Grade Loop - Zone 1		1	UDN	U1L2X	21.01	117.61	79.92	52.82	10.37						
	2-Wire ISDN Digital Grade Loop - Zone 2		2	UDN	U1L2X	27.59	117.61	79.92	52.82	10.37						
	2-Wire ISDN Digital Grade Loop - Zone 3		3	UDN	U1L2X	37.34	117.61	79.92	52.82	10.37						
	2-Wire ISDN Digital Grade Loop - Zone 4		4	UDN	U1L2X	59.18	117.61	79.92	52.82	10.37						
	Order Coordination For Specified Conversion Time (per LSR)			UDN	OCOSL		18.19									
	CLEC to CLEC Conversion Charge without outside dispatch			UDN	UREWO		91.46	44.07								
2-WIRE ASYMMETRICAL DIGITAL SUBSCRIBER LINE (ADSL) COMPATIBLE LOOP																
	2 Wire Unbundled ADSL Loop including manual service inquiry & facility reservation - Zone 1		1	UAL	UAL2X	11.11	121.27	70.81	50.38	7.93						
	2 Wire Unbundled ADSL Loop including manual service inquiry & facility reservation - Zone 2		2	UAL	UAL2X	11.47	121.27	70.81	50.38	7.93						
	2 Wire Unbundled ADSL Loop including manual service inquiry & facility reservation - Zone 3		3	UAL	UAL2X	11.74	121.27	70.81	50.38	7.93						
	2 Wire Unbundled ADSL Loop including manual service inquiry & facility reservation - Zone 4		4	UAL	UAL2X	12.69	121.27	70.81	50.38	7.93						
	Order Coordination for Specified Conversion Time (per LSR)			UAL	OCOSL		18.19									
	2 Wire Unbundled ADSL Loop without manual service inquiry & facility reservaton - Zone 1		1	UAL	UAL2W	11.11	96.15	58.03	50.38	7.93						
	2 Wire Unbundled ADSL Loop without manual service inquiry & facility reservaton - Zone 2		2	UAL	UAL2W	11.47	96.15	58.03	50.38	7.93						
	2 Wire Unbundled ADSL Loop without manual service inquiry & facility reservaton - Zone 3		3	UAL	UAL2W	11.74	96.15	58.03	50.38	7.93						
	2 Wire Unbundled ADSL Loop without manual service inquiry & facility reservaton - Zone 4		4	UAL	UAL2W	12.69	96.15	58.03	50.38	7.93						
	Order Coordination for Specified Conversion Time (per LSR)			UAL	OCOSL		18.19									
	CLEC to CLEC Conversion Charge without outside dispatch			UAL	UREWO		86.04	40.33								
2-WIRE HIGH BIT RATE DIGITAL SUBSCRIBER LINE (HDSL) COMPATIBLE LOOP																
	2 Wire Unbundled HDSL Loop including manual service inquiry & facility reservation - Zone 1		1	UHL	UHL2X	8.75	129.98	79.52	50.38	7.93						
	2 Wire Unbundled HDSL Loop including manual service inquiry & facility reservation - Zone 2		2	UHL	UHL2X	9.22	129.98	79.52	50.38	7.93						
	2 Wire Unbundled HDSL Loop including manual service inquiry & facility reservation - Zone 3		3	UHL	UHL2X	9.87	129.98	79.52	50.38	7.93						
	2 Wire Unbundled HDSL Loop including manual service inquiry & facility reservation - Zone 4		4	UHL	UHL2X	10.46	129.98	79.52	50.38	7.93						
	Order Coordination for Specified Conversion Time (per LSR)			UHL	OCOSL		18.19									
	2 Wire Unbundled HDSL Loop without manual service inquiry and facility reservation - Zone 1		1	UHL	UHL2W	8.75	104.86	66.74	50.38	7.93						
	2 Wire Unbundled HDSL Loop without manual service inquiry and facility reservation - Zone 2		2	UHL	UHL2W	9.22	104.86	66.74	50.38	7.93						
	2 Wire Unbundled HDSL Loop without manual service inquiry and facility reservation - Zone 3		3	UHL	UHL2W	9.87	104.86	66.74	50.38	7.93						
	2 Wire Unbundled HDSL Loop without manual service inquiry and facility reservation - Zone 4		4	UHL	UHL2W	10.46	104.86	66.74	50.38	7.93						
	Order Coordination for Specified Conversion Time (per LSR)			UHL	OCOSL		18.19									
	CLEC to CLEC Conversion Charge without outside dispatch			UHL	UREWO		85.98	40.33								
4-WIRE HIGH BIT RATE DIGITAL SUBSCRIBER LINE (HDSL) COMPATIBLE LOOP																
	4 Wire Unbundled HDSL Loop including manual service inquiry and facility reservation - Zone 1		1	UHL	UHL4X	13.78	158.74	108.28	56.72	10.68						

UNBUNDLED NETWORK ELEMENTS - Mississippi														Attachment: 2		Exhibit: A	
CATEGORY		RATE ELEMENTS	Interim	Zone	BCS	USOC	RATES ($)					Svc Order Submitted Elec per LSR	Svc Order Submitted Manually per LSR	Incremental Charge - Manual Svc Order vs. Electronic-1st	Incremental Charge - Manual Svc Order vs. Electronic-Add'l	Incremental Charge - Manual Svc Order vs. Electronic-Disc 1st	Incremental Charge - Manual Svc Order vs. Electronic-Disc Add'l
							Rec	Nonrecurring		Nonrecurring Disconnect		OSS Rates ($)					
								First	Add'l	First	Add'l	SOMEC	SOMAN	SOMAN	SOMAN	SOMAN	SOMAN
		4-Wire Unbundled HDSL Loop including manual service inquiry and facility reservation - Zone 2		2	UHL	UHL4X	13.43	158.74	108.28	56.72	10.68						
		4-Wire Unbundled HDSL Loop including manual service inquiry and facility reservation - Zone 3		3	UHL	UHL4X	15.59	158.74	108.28	56.72	10.68						
		4-Wire Unbundled HDSL Loop including manual service inquiry and facility reservation - Zone 4		4	UHL	UHL4X	14.46	158.74	108.28	56.72	10.68						
		Order Coordination for Specified Conversion Time (per LSR)			UHL	OCOSL		18.19									
		4-Wire Unbundled HDSL Loop without manual service inquiry and facility reservation - Zone 1		1	UHL	UHL4W	13.78	133.62	95.50	56.72	10.68						
		4-Wire Unbundled HDSL Loop without manual service inquiry and facility reservation - Zone 2		2	UHL	UHL4W	13.43	133.62	95.50	56.72	10.68						
		4-Wire Unbundled HDSL Loop without manual service inquiry and facility reservation - Zone 3		3	UHL	UHL4W	15.59	133.62	95.50	56.72	10.68						
		4-Wire Unbundled HDSL Loop without manual service inquiry and facility reservation - Zone 4		4	UHL	UHL4W	14.46	133.62	95.50	56.72	10.68						
		Order Coordination for Specified Conversion Time (per LSR)			UHL	OCOSL		18.19									
		CLEC to CLEC Conversion Charge without outside dispatch			UHL	UREWO		85.98	40.33								
	4-WIRE DS1 DIGITAL LOOP																
		4-Wire DS1 Digital Loop - Zone 1		1	USL	USLXX	79.08	253.93	158.45	46.10	12.07						
		4-Wire DS1 Digital Loop - Zone 2		2	USL	USLXX	129.38	253.93	158.45	46.10	12.07						
		4-Wire DS1 Digital Loop - Zone 3		3	USL	USLXX	206.74	253.93	158.45	46.10	12.07						
		4-Wire DS1 Digital Loop - Zone 4		4	USL	USLXX	458.46	253.93	158.45	46.10	12.07						
		Order Coordination for Specified Conversion Time (per LSR)			USL	OCOSL		18.19									
		CLEC to CLEC Conversion Charge without outside dispatch			USL	UREWO		100.90	42.96								
	4-WIRE 19.2, 56 OR 64 KBPS DIGITAL GRADE LOOP																
		4 Wire Unbundled Digital 19.2 Kbps		1	UDL	UDL19	27.44	126.53	88.85	60.68	14.64						
		4 Wire Unbundled Digital 19.2 Kbps		2	UDL	UDL19	34.55	126.53	88.85	60.68	14.64						
		4 Wire Unbundled Digital 19.2 Kbps		3	UDL	UDL19	40.76	126.53	88.85	60.68	14.64						
		4 Wire Unbundled Digital 19.2 Kbps		4	UDL	UDL19	32.25	126.53	88.85	60.68	14.64						
		4 Wire Unbundled Digital Loop 56 Kbps - Zone 1		1	UDL	UDL56	27.44	126.53	88.85	60.68	14.64						
		4 Wire Unbundled Digital Loop 56 Kbps - Zone 2		2	UDL	UDL56	34.55	126.53	88.85	60.68	14.64						
		4 Wire Unbundled Digital Loop 56 Kbps - Zone 3		3	UDL	UDL56	40.76	126.53	88.85	60.68	14.64						
		4 Wire Unbundled Digital Loop 56 Kbps - Zone 4		4	UDL	UDL56	32.25	126.53	88.85	60.68	14.64						
		Order Coordination for Specified Conversion Time (per LSR)			UDL	OCOSL		18.19									
		4 Wire Unbundled Digital Loop 64 Kbps - Zone 1		1	UDL	UDL64	27.44	126.53	88.85	60.68	14.64						
		4 Wire Unbundled Digital Loop 64 Kbps - Zone 2		2	UDL	UDL64	34.55	126.53	88.85	60.68	14.64						
		4 Wire Unbundled Digital Loop 64 Kbps - Zone 3		3	UDL	UDL64	40.76	126.53	88.85	60.68	14.64						
		4 Wire Unbundled Digital Loop 64 Kbps - Zone 4		4	UDL	UDL64	32.25	126.53	88.85	60.68	14.64						
		Order Coordination for Specified Conversion Time (per LSR)			UDL	OCOSL		18.19									
		CLEC to CLEC Conversion Charge without outside dispatch			UDL	UREWO		101.94	49.66								
	2-WIRE Unbundled COPPER LOOP																
		2-Wire Unbundled Copper Loop-Designed including manual service inquiry & facility reservation - Zone 1		1	UCL	UCLPB	11.11	120.34	69.87	50.38	7.93						
		2-Wire Unbundled Copper Loop-Designed including manual service inquiry & facility reservation - Zone 2		2	UCL	UCLPB	11.47	120.34	69.87	50.38	7.93						
		2 Wire Unbundled Copper Loop-Designed including manual service inquiry & facility reservation - Zone 3		3	UCL	UCLPB	11.74	120.34	69.87	50.38	7.93						
		2 Wire Unbundled Copper Loop-Designed including manual service inquiry & facility reservation - Zone 4		4	UCL	UCLPB	12.69	120.34	69.87	50.38	7.93						
		Order Coordination for Unbundled Copper Loops (per loop)			UCL	UCLMC		8.20	8.20								
		2-Wire Unbundled Copper Loop-Designed without manual service inquiry and facility reservation - Zone 1		1	UCL	UCLPW	11.11	95.21	57.09	50.38	7.93						
		2-Wire Unbundled Copper Loop-Designed without manual service inquiry and facility reservation - Zone 2		2	UCL	UCLPW	11.47	95.21	57.09	50.38	7.93						
		2-Wire Unbundled Copper Loop-Designed without manual service inquiry and facility reservation - Zone 3		3	UCL	UCLPW	11.74	95.21	57.09	50.38	7.93						
		2-Wire Unbundled Copper Loop-Designed without manual service inquiry and facility reservation - Zone 4		4	UCL	UCLPW	12.69	95.21	57.09	50.38	7.93						
		Order Coordination for Unbundled Copper Loops (per loop)			UCL	UCLMC		8.20	8.20								

UNBUNDLED NETWORK ELEMENTS - Mississippi														Attachment: 2		Exhibit: A	
CATEGORY		RATE ELEMENTS	Interim	Zone	BCS	USOC	RATES ($)					Svc Order Submitted Elec per LSR	Svc Order Submitted Manually per LSR	Incremental Charge - Manual Svc Order vs. Electronic-1st	Incremental Charge - Manual Svc Order vs. Electronic-Add'l	Incremental Charge - Manual Svc Order vs. Electronic-Disc 1st	Incremental Charge - Manual Svc Order vs. Electronic-Disc Add'l
							Rec	Nonrecurring		Nonrecurring Disconnect		OSS Rates ($)					
								First	Add'l	First	Add'l	SOMEC	SOMAN	SOMAN	SOMAN	SOMAN	SOMAN
		CLEC to CLEC Conversion Charge without outside dispatch (UCL-Des)			UCL	UREWO		95.21	42.40								
	4-WIRE COPPER LOOP																
		4-Wire Copper Loop-Designed including manual service inquiry and facility reservation - Zone 1		1	UCL	UCL4S	17.30	144.68	94.22	56.72	10.68						
		4-Wire Copper Loop-Designed including manual service inquiry and facility reservation - Zone 2		2	UCL	UCL4S	18.84	144.68	94.22	56.72	10.68						
		4-Wire Copper Loop-Designed including manual service inquiry and facility reservation - Zone 3		3	UCL	UCL4S	21.33	144.68	94.22	56.72	10.68						
		4-Wire Copper Loop-Designed including manual service inquiry and facility reservation - Zone 4		4	UCL	UCL4S	21.33	144.68	94.22	56.72	10.68						
		Order Coordination for Unbundled Copper Loops (per loop)			UCL	UCLMC		8.20	8.20								
		4-Wire Copper Loop-Designed without manual service inquiry and facility reservation - Zone 1		1	UCL	UCL4W	17.30	119.56	81.44	56.72	10.68						
		4-Wire Copper Loop-Designed without manual service inquiry and facility reservation - Zone 2		2	UCL	UCL4W	18.84	119.56	81.44	56.72	10.68						
		4-Wire Copper Loop-Designed without manual service inquiry and facility reservation - Zone 3		3	UCL	UCL4W	21.33	119.56	81.44	56.72	10.68						
		4-Wire Copper Loop-Designed without manual service inquiry and facility reservation - Zone 4		4	UCL	UCL4W	21.33	119.56	81.44	56.72	10.68						
		Order Coordination for Unbundled Copper Loops (per loop)			UCL	UCLMC		8.20	8.20								
		CLEC to CLEC Conversion Charge without outside dispatch (UCL-Des)			UCL	UREWO		95.21	42.40								
LOOP MODIFICATION																	
		Unbundled Loop Modification, Removal of Load Coils - 2 Wire pair less than or equal to 18k ft, per Unbundled Loop			UAL, UHL, UCL, UEQ, ULS, UEA, UEANL, UEPSR, UEPSB	ULM2L		32.57	32.57								
		Unbundled Loop Modification Removal of Load Coils - 4 Wire less than or equal to 18K ft, per Unbundled Loop			UHL, UCL, UEA	ULM4L		32.57	32.57								
		Unbundled Loop Modification Removal of Bridged Tap Removal, per unbundled loop			UAL, UHL, UCL, UEQ, ULS, UEA, UEANL, UEPSR, UEPSB	ULMBT		32.59	32.59								
SUB-LOOPS																	
	Sub-Loop Distribution																
		Sub-Loop - Per Cross Box Location - CLEC Feeder Facility Set-Up	I		UEANL	USBSA		259.69									
		Sub-Loop - Per Cross Box Location - Per 25 Pair Panel Set-Up	I		UEANL	USBSB		22.77									
		Sub-Loop - Per Building Equipment Room - CLEC Feeder Facility Set-Up	I		UEANL	USBSC		178.47									
		Sub-Loop - Per Building Equipment Room - Per 25 Pair Panel Set-Up	I		UEANL	USBSD		56.39									
		Sub-Loop Distribution Per 2-Wire Analog Voice Grade Loop - Zone 1	I	1	UEANL	USBN2	7.15	66.18	31.14	45.36	6.71						
		Sub-Loop Distribution Per 2-Wire Analog Voice Grade Loop - Zone 2	I	2	UEANL	USBN2	9.51	66.18	31.14	45.36	6.71						
		Sub-Loop Distribution Per 2-Wire Analog Voice Grade Loop - Zone 3	I	3	UEANL	USBN2	12.45	66.18	31.14	45.36	6.71						
		Sub-Loop Distribution Per 2-Wire Analog Voice Grade Loop - Zone 4		4	UEANL	USBN2	18.26	66.18	31.14	45.36	6.71						
		Order Coordination for Unbundled Sub-Loops, per sub-loop pair			UEANL	USBMC		8.20	8.20								
		Sub-Loop Distribution Per 4-Wire Analog Voice Grade Loop - Zone 1		1	UEANL	USBN4	7.30	79.49	44.45	51.27	9.35						
		Sub-Loop Distribution Per 4-Wire Analog Voice Grade Loop - Zone 2		2	UEANL	USBN4	13.92	79.49	44.45	51.27	9.35						

UNBUNDLED NETWORK ELEMENTS - Mississippi														Attachment: 2		Exhibit: A	
CATEGORY		RATE ELEMENTS	Interim	Zone	BCS	USOC	RATES ($)					Svc Order Submitted Elec per LSR	Svc Order Submitted Manually per LSR	Incremental Charge - Manual Svc Order vs. Electronic-1st	Incremental Charge - Manual Svc Order vs. Electronic-Add'l	Incremental Charge - Manual Svc Order vs. Electronic-Disc 1st	Incremental Charge - Manual Svc Order vs. Electronic-Disc Add'l
							Rec	Nonrecurring		Nonrecurring Disconnect		OSS Rates ($)					
								First	Add'l	First	Add'l	SOMEC	SOMAN	SOMAN	SOMAN	SOMAN	SOMAN
		Sub-Loop Distribution Per 4-Wire Analog Voice Grade Loop - Zone 3		3	UEANL	USBN4	16.73	79.49	44.45	51.27	9.35						
		Sub-Loop Distribution Per 4-Wire Analog Voice Grade Loop - Zone 4		4	UEANL	USBN4	16.73	79.49	44.45	51.27	9.35						
		Order Coordination for Unbundled Sub-Loops, per sub-loop pair			UEANL	USBMC		8.20	8.20								
		Sub-Loop 2-Wire Intrabuilding Network Cable (INC)	I		UEANL	USBR2	2.29	53.32	18.28	45.36	6.71						
		Order Coordination for Unbundled Sub-Loops, per sub-loop pair			UEANL	USBMC		8.20	8.20								
		Sub-Loop 4-Wire Intrabuilding Network Cable (INC)	I		UEANL	USBR4	4.40	59.60	24.55	51.27	9.35						
		Order Coordination for Unbundled Sub-Loops, per sub-loop pair			UEANL	USBMC		8.20	8.20								
		Loop Testing - Basic 1st Half Hour			UEANL	URET1		34.36	34.36								
		Loop Testing - Basic Additional Half Hour			UEANL	URETA		19.97	19.97								
		2 Wire Copper Unbundled Sub-Loop Distribution - Zone 1	I	1	UEF	UCS2X	6.06	66.18	31.14	45.36	6.71						
		2 Wire Copper Unbundled Sub-Loop Distribution - Zone 2	I	2	UEF	UCS2X	7.09	66.18	31.14	45.36	6.71						
		2 Wire Copper Unbundled Sub-Loop Distribution - Zone 3	I	3	UEF	UCS2X	8.16	66.18	31.14	45.36	6.71						
		2 Wire Copper Unbundled Sub-Loop Distribution - Zone 4		4	UEF	UCS2X	9.90	66.18	31.14	45.36	6.71						
		Order Coordination for Unbundled Sub-Loops, per sub-loop pair			UEF	USBMC		8.20	8.20								
		4 Wire Copper Unbundled Sub-Loop Distribution - Zone 1	I	1	UEF	UCS4X	5.10	79.49	44.45	51.27	9.35						
		4 Wire Copper Unbundled Sub-Loop Distribution - Zone 2	I	2	UEF	UCS4X	9.11	79.49	44.45	51.27	9.35						
		4 Wire Copper Unbundled Sub-Loop Distribution - Zone 3	I	3	UEF	UCS4X	14.00	79.49	44.45	51.27	9.35						
		4 Wire Copper Unbundled Sub-Loop Distribution - Zone 4		4	UEF	UCS4X	14.00	79.49	44.45	51.27	9.35						
		Order Coordination for Unbundled Sub-Loops, per sub-loop pair			UEF	USBMC		8.20	8.20								
		Loop Testing - Basic 1st Half Hour			UEF	URET1		34.36	34.36								
		Loop Testing - Basic Additional Half Hour			UEF	URETA		19.97	19.97								
	Unbundled Network Terminating Wire (UNTW)																
		Unbundled Network Terminating Wire (UNTW) per Pair			UENTW	UENPP	0.3366	30.55									
	Network Interface Device (NID)																
		Network Interface Device (NID) - 1-2 lines			UENTW	UND12		43.84	28.90								
		Network Interface Device (NID) - 1-6 lines			UENTW	UND16		65.30	50.36								
		Network Interface Device Cross Connect - 2 W			UENTW	UNDC2		5.94	5.94								
		Network Interface Device Cross Connect - 4W			UENTW	UNDC4		5.94	5.94								
UNE OTHER, PROVISIONING ONLY - NO RATE																	
		NID - Dispatch and Service Order for NID installation			UENTW	UNDBX	0.00	0.00									
		UNTW Circuit Id Establishment, Provisioning Only - No Rate			UENTW	UENCE	0.00	0.00									
		Unbundled Contract Name, Provisioning Only - No Rate			UEANL,UEF,UEQ,UENTW	UNECN	0.00	0.00									
UNE OTHER, PROVISIONING ONLY - NO RATE																	
		Unbundled Contact Name, Provisioning Only - no rate			UAL,UCL,UDC,UDL,UDN,UEA,UHL,ULC	UNECN	0.00	0.00									
		Unbundled Sub-Loop Feeder-2 Wire Cross Box Jumper - no rate			UEA,UDN,UCL,UDC	USBFQ	0.00	0.00									
		Unbundled Sub-Loop Feeder-4 Wire Cross Box Jumper - no rate			UEA,USL,UCL,UDL	USBFR	0.00	0.00									
		Unbundled DS1 Loop - Superframe Format Option - no rate			USL	CCOSF	0.00	0.00									
		Unbundled DS1 Loop - Expanded Superframe Format option - no rate			USL	CCOEF	0.00	0.00									
HIGH CAPACITY UNBUNDLED LOCAL LOOP																	
		High Capacity Unbundled Local Loop - DS3 - Per Mile per month			UE3	1L5ND	11.20										
		High Capacity Unbundled Local Loop - DS3 - Facility Termination per month			UE3	UE3PX	326.15	454.13	265.47	123.23	86.19						
		High Capacity Unbundled Local Loop - STS-1 - Per Mile per month			UDLSX	1L5ND	11.20										

UNBUNDLED NETWORK ELEMENTS - Mississippi														Attachment: 2		Exhibit: A	
CATEGORY		RATE ELEMENTS	Interim	Zone	BCS	USOC	RATES ($)					Svc Order Submitted Elec per LSR	Svc Order Submitted Manually per LSR	Incremental Charge - Manual Svc Order vs. Electronic-1st	Incremental Charge - Manual Svc Order vs. Electronic-Add'l	Incremental Charge - Manual Svc Order vs. Electronic-Disc 1st	Incremental Charge - Manual Svc Order vs. Electronic-Disc Add'l
							Rec	Nonrecurring		Nonrecurring Disconnect		OSS Rates ($)					
								First	Add'l	First	Add'l	SOMEC	SOMAN	SOMAN	SOMAN	SOMAN	SOMAN
		High Capacity Unbundled Local Loop - STS-1 - Facility Termination per month			UDLSX	UDLS1	338.55	454.13	265.47	123.23	86.19						
LOOP MAKE-UP																	
		Loop Makeup - Preordering Without Reservation, per working or spare facility queried (Manual).			UMK	UMKLW		24.12	24.12								
		Loop Makeup - Preordering With Reservation, per spare facility queried (Manual).			UMK	UMKLP		25.58	25.58								
		Loop Makeup--With or Without Reservation, per working or spare facility queried (Mechanized)			UMK	UMKMQ		0.6652	0.6652								
LINE SHARING AND LINE SPLITTING																	
	NOTE 1: The Line Sharing monthly recurring rates for all installations completed from October 02, 2003 through midnight October 01, 2004 shall be billed as follows:																
	NOTE 1: 10/02/2003 – 10/01/2004: 25% of the rate for an unbundled copper loop non-designed (“UCLND”)																
	NOTE 1: 10/02/2004 – 10/01/2005: 50% of the rate for UCLND																
	NOTE 1: 10/02/2005 – 10/01/2006: 75% of the rate for UCLND																
	NOTE 1: Above will apply to USOCS: ULSDT and ULSCT																
	**NOTE 2: The Line Sharing monthly recurring rates with USOCs ULSDC and ULSCC applies only to circuits installed and inservice on or before October 1, 2003																
	LINE SHARING																
	SPLITTERS-CENTRAL OFFICE BASED																
		Line Sharing Splitter, per System 96 Line Capacity			ULS	ULSDA	186.67	189.89	0.00	178.41	0.00						
		Line Sharing Splitter, per System 24 Line Capacity			ULS	ULSDB	46.67	189.89	0.00	178.41	0.00						
		Line Sharing Splitter, Per System, 8 Line Capacity			ULS	ULSD8	15.55	189.89	0.00	178.41	0.00						
		Line Sharing-DLEC Owned Splitter in CO-CFA activaton-deactivation (per LSOD)			ULS	ULSDG		86.98	0.00	49.96	0.00						
	END USER ORDERING-CENTRAL OFFICE BASED LINE SHARING																
		Line Sharing - per Line Activation (BST Owned splitter) - OBSOLETE see **NOTE 2			ULS	ULSDC	0.61	18.62	10.66	10.04	4.93						
		Line Share Service, TRO per line activation, BST owned splitter - Central Office Located (25% of UCLND) - please see NOTE 1 (E:10/2/2003)			ULS	ULSDT	2.75	18.62	10.66	10.04	4.93						
		Line Share Service, TRO per line activation, BST owned splitter - Central Office Located (50% of UCLND) - please see NOTE 1 (E:10/2/2004)			ULS	ULSDT	5.51	18.62	10.66	10.04	4.93						
		Line Share Service, TRO per line activation, BST owned splitter - Central Office Located (75% of UCLND) - please see NOTE 1 (E:10/2/2005)			ULS	ULSDT	8.26	18.62	10.66	10.04	4.93						
		Line Sharing - per Subsequent Activity per Line Rearrangement(BST Owned Splitter)			ULS	ULSDS		16.48	8.24								
		Line Sharing - per Subsequent Activity per Line Rearrangement(DLEC Owned Splitter)			ULS	ULSCS		16.48	8.24								
		Line Sharing - per Line Activation (DLEC owned Splitter) - OBSOLETE see **NOTE 2			ULS	ULSCC	0.61	47.44	19.31	20.67	12.74						
		Line Share Service, TRO per line activation, CLEC owned splitter - Central Office Located (25% of UCLND) - please see NOTE 1 (E:10/2/2003)			ULS	ULSCT	2.75	47.44	19.31	20.67	12.74						
		Line Share Service, TRO per line activation, CLEC owned splitter - Central Office Located (50% of UCLND) - please see NOTE 1 (E:10/2/2004)			ULS	ULSCT	5.51	47.44	19.31	20.67	12.74						
		Line Share Service, TRO per line activation, CLEC owned splitter - Central Office Located (75% of UCLND) - please see NOTE 1 (E:10/2/2005)			ULS	ULSCT	8.26	47.44	19.31	20.67	12.74						
	LINE SPLITTING																
	END USER ORDERING-CENTRAL OFFICE BASED																
		Line Splitting - per line activation DLEC owned splitter			UEPSR UEPSB	UREOS	0.61										
		Line Splitting - per line activation BST owned - physical			UEPSR UEPSB	UREBP	0.61	18.62	10.66	10.04	4.93						
		Line Splitting - per line activation BST owned - virtual			UEPSR UEPSB	UREBV	0.61	18.62	10.66	10.04	4.93						
	MAINTENANCE																
		No Trouble Found - per 1/2 hour increments - Basic						80.00	55.00								
		No Trouble Found - per 1/2 hour increments - Overtime						120.00	82.50								
		No Trouble Found - per 1/2 hour increments - Premium						160.00	110.00								

UNBUNDLED NETWORK ELEMENTS - Mississippi														Attachment: 2		Exhibit: A	
CATEGORY		RATE ELEMENTS	Interim	Zone	BCS	USOC	RATES ($)					Svc Order Submitted Elec per LSR	Svc Order Submitted Manually per LSR	Incremental Charge - Manual Svc Order vs. Electronic-1st	Incremental Charge - Manual Svc Order vs. Electronic-Add'l	Incremental Charge - Manual Svc Order vs. Electronic-Disc 1st	Incremental Charge - Manual Svc Order vs. Electronic-Disc Add'l
							Rec	Nonrecurring		Nonrecurring Disconnect		OSS Rates ($)					
								First	Add'l	First	Add'l	SOMEC	SOMAN	SOMAN	SOMAN	SOMAN	SOMAN
UNBUNDLED DEDICATED TRANSPORT																	
	INTEROFFICE CHANNEL - DEDICATED TRANSPORT																
		Interoffice Channel - Dedicated Transport - 2-Wire Voice Grade - Per Mile per month			U1TVX	1L5XX	0.0098										
		Interoffice Channel - Dedicated Transport- 2- Wire Voice Grade - Facility Termination			U1TVX	U1TV2	22.52	40.77	27.57	17.26	7.11						
		Interoffice Channel - Dedicated Transpor t- 2-Wire Voice Grade Rev Bat. - Per Mile per month			U1TVX	1L5XX	0.0098										
		Interoffice Channel - Dedicated Transport- 2- Wire VG Rev Bat. - Facility Termination			U1TVX	U1TR2	22.52	40.77	27.57	17.26	7.11						
		Interoffice Channel - Dedicated Transport - 4-Wire Voice Grade - Per Mile per month			U1TVX	1L5XX	0.0098										
		Interoffice Channel - Dedicated Transport - 4- Wire Voice Grade - Facility Termination			U1TVX	U1TV4	19.79	40.77	27.57	17.26	7.11						
		Interoffice Channel - Dedicated Transport - 56 kbps - per mile per month			U1TDX	1L5XX	0.0098										
		Interoffice Channel - Dedicated Transport - 56 kbps - Facility Termination			U1TDX	U1TD5	15.68	40.78	27.57	17.26	7.11						
		Interoffice Channel - Dedicated Transport - 64 kbps - per mile per month			U1TDX	1L5XX	0.0098										
		Interoffice Channel - Dedicated Transport - 64 kbps - Facility Termination			U1TDX	U1TD6	15.68	40.78	27.57	17.26	7.11						
		Interoffice Channel - Dedicated Channel - DS1 - Per Mile per month			U1TD1	1L5XX	0.201										
		Interoffice Channel - Dedicated Tranport - DS1 - Facility Termination			U1TD1	U1TF1	57.33	89.79	82.28	16.86	14.90						
		Interoffice Channel - Dedicated Transport - DS3 - Per Mile per month			U1TD3	1L5XX	4.76										
		Interoffice Channel - Dedicated Transport - DS3 - Facility Termination per month			U1TD3	U1TF3	641.90	280.37	163.70	62.08	60.29						
		Interoffice Channel - Dedicated Transport - STS-1 - Per Mile per month			U1TS1	1L5XX	4.76										
		Interoffice Channel - Dedicated Transport - STS-1 - Facility Termination			U1TS1	U1TFS	644.21	280.37	163.70	62.08	60.29						
DARK FIBER																	
		Dark Fiber, Four Fiber Strands, Per Route Mile or Fraction Thereof per month - Interoffice Channel			UDF, UDFCX	1L5DF	28.27										
		NRC Dark Fiber - Interoffice Channel			UDF, UDFCX	UDF14		642.79	138.67	326.97	203.85						
		Dark Fiber, Four Fiber Strands, Per Route Mile or Fraction Thereof per month - Local Loop			UDF, UDFCX	1L5DL	59.95										
		NRC Dark Fiber - Local Loop			UDF, UDFCX	UDFL4		642.79	138.67	326.97	203.85						
8XX ACCESS TEN DIGIT SCREENING																	
		8XX Access Ten Digit Screening, Per Call			OHD		0.0006216										
		8XX Access Ten Digit Screening, Reservation Charge Per 8XX Number Reserved			OHD	N8R1X		2.60	0.44								
		8XX Access Ten Digit Screening, Per 8XX No. Established W/O POTS Translations			OHD			5.97	0.81	4.60	0.54						
		8XX Access Ten Digit Screening, Per 8XX No. Established With POTS Translations			OHD	N8FTX		5.97	0.81	4.60	0.54						
		8XX Access Ten Digit Screening, Customized Area of Service Per 8XX Number			OHD	N8FCX		2.60	1.30								
		8XX Access Ten Digit Screening, Multiple InterLATA CXR Routing Per CXR Requested Per 8XX No.			OHD	N8FMX		3.04	1.74								
		8XX Access Ten Digit Screening, Change Charge Per Request			OHD	N8FAX		3.04	0.44								
		8XX Access Ten Digit Screening, Call Handling and Destination Features			OHD	N8FDX		2.60									
		8XX Access Ten Digit Screening, w/ 8FL No. Delivery, per query			OHD		0.0006216										

UNBUNDLED NETWORK ELEMENTS - Mississippi														Attachment: 2		Exhibit: A	
CATEGORY		RATE ELEMENTS	Interim	Zone	BCS	USOC	RATES ($)					Svc Order Submitted Elec per LSR	Svc Order Submitted Manually per LSR	Incremental Charge - Manual Svc Order vs. Electronic-1st	Incremental Charge - Manual Svc Order vs. Electronic-Add'l	Incremental Charge - Manual Svc Order vs. Electronic-Disc 1st	Incremental Charge - Manual Svc Order vs. Electronic-Disc Add'l
							Rec	Nonrecurring		Nonrecurring Disconnect		OSS Rates ($)					
								First	Add'l	First	Add'l	SOMEC	SOMAN	SOMAN	SOMAN	SOMAN	SOMAN
		8XX Access Ten Digit Screening, w/ POTS No. Delivery, per query			OHD		0.0006216										
LINE INFORMATION DATA BASE ACCESS (LIDB)																	
		LIDB Common Transport Per Query			OQT		0.0000197										
		LIDB Validation Per Query			OQU		0.0137053										
		LIDB Originating Point Code Establishment or Change			OQT, OQU	NRBPX		34.52	34.52	42.33	42.33						
SIGNALING (CCS7)																	
		CCS7 Signaling Termination, Per STP Port			UDB	PT8SX	132.21										
		CCS7 Signaling Usage, Per TCAP Message			UDB		0.0000597										
		CCS7 Signaling Connection, Per link (A link)			UDB	TPP++	16.55	35.74	35.74	16.53	16.53						
		CCS7 Signaling Connection, Per link (B link) (also known as D link)			UDB	TPP++	16.55	35.74	35.74	16.53	16.53						
		CCS7 Signaling Usage, Per ISUP Message			UDB		0.0000149										
		CCS7 Signaling Usage Surrogate, per link per LATA			UDB	STU56	683.55										
		CCS7 Signaling Point Code, per Originating Point Code Establishment or Change, per STP affected			UDB	CCAPO		29.18	29.18	35.78	35.78						
E911 SERVICE																	
		Local Channel - Dedicated - 2-wr Voice Grade					14.91	194.22	33.36	37.79	3.30						
		Interoffice Transport - Dedicated - 2-wr Voice Grade Per Mile					0.0098										
		Interoffice Transport - Dedicated - 2-wr Voice Grade Per Facility Termination					22.52	40.77	27.57	17.26	7.11						
		Local Channel - Dedicated - DS1 - Zone 1					36.83	178.50	154.61	22.89	15.74						
		Local Channel - Dedicated - DS1 - Zone 2					35.99	178.50	154.61	22.89	15.74						
		Local Channel - Dedicated - DS1 - Zone 3					221.63	178.50	154.61	22.89	15.74						
		Local Channel - Dedicated - DS1 - Zone 4					221.63	178.50	154.61	22.89	15.74						
		Interoffice Transport - Dedicated - DS1 Per Mile					0.2010										
		Interoffice Transport - Dedicated - DS1 Per Facility Termination					57.33	89.79	82.28	16.86	14.90						
CALLING NAME (CNAM) SERVICE																	
		CNAM For DB Owners - Service Establishment			OQV			23.09	23.09	21.23	21.23						
		CNAM For Non DB Owners - Service Establishment			OQV			23.09	23.09	21.23	21.23						
		CNAM For DB Owners - Service Provisioning With Point Code Establishment			OQV			996.62	737.08	270.49	198.89						
		CNAM For Non DB Owners - Service Provisioning With Point Code Establishment			OQV			344.32	246.56	276.85	198.89						
		CNAM for DB Owners, Per Query			OQV		0.0010231										
		CNAM for Non DB Owners, Per Query			OQV		0.0010231										
SELECTIVE ROUTING																	
		Selective Routing Per Unique Line Class Code Per Request Per Switch						85.19	85.19	14.19	14.19						
VIRTUAL COLLOCATION																	
		Virtual Collocation-2 Wire Cross Connects (Loop) for Line Splitting			UEPSR UEPSB	VE1LS	0.0268	12.37	11.87	6.04	5.45						
PHYSICAL COLLOCATION																	
		Physical Collocation-2 Wire Cross Connects (Loop) for Line Splitting			UEPSR UEPSB	PE1LS	0.0288	12.37	11.87	6.04	5.45						
AIN SELECTIVE CARRIER ROUTING																	
		Regional Service Establishment			SRC	SRCEC		101,685.12		8,640.51							
		End Office Establishment			SRC	SRCEO		167.49	167.49	1.71	1.71						
		Query NRC, per query			SRC		0.0030502										
AIN - BELLSOUTH AIN SMS ACCESS SERVICE																	
		AIN SMS Access Service - Service Establishment, Per State, Initial Setup			A1N	CAMSE		39.67	39.67	40.92	40.92						
		AIN SMS Access Service - Port Connection - Dial/Shared Access			A1N	CAMDP		7.87	7.87	9.14	9.14						
		AIN SMS Access Service - Port Connection - ISDN Access			A1N	CAM1P		7.87	7.87	9.14	9.14						
		AIN SMS Access Service - User Identification Codes - Per User ID Code			A1N	CAMAU		35.21	35.21	27.21	27.21						

UNBUNDLED NETWORK ELEMENTS - Mississippi														Attachment: 2		Exhibit: A	
CATEGORY		RATE ELEMENTS	Interim	Zone	BCS	USOC	RATES ($)					Svc Order Submitted Elec per LSR	Svc Order Submitted Manually per LSR	Incremental Charge - Manual Svc Order vs. Electronic-1st	Incremental Charge - Manual Svc Order vs. Electronic-Add'l	Incremental Charge - Manual Svc Order vs. Electronic-Disc 1st	Incremental Charge - Manual Svc Order vs. Electronic-Disc Add'l
							Rec	Nonrecurring		Nonrecurring Disconnect		OSS Rates ($)					
								First	Add'l	First	Add'l	SOMEC	SOMAN	SOMAN	SOMAN	SOMAN	SOMAN
		AIN SMS Access Service - Security Card, Per User ID Code, Initial or Replacement			A1N	CAMRC		42.13	42.13	11.78	11.78						
		AIN SMS Access Service - Storage, Per Unit (100 Kilobytes)					0.0021										
		AIN SMS Access Service - Session, Per Minute					0.5649										
		AIN SMS Access Service - Company Performed Session, Per Minute					0.8393										
AIN - BELLSOUTH AIN TOOLKIT SERVICE																	
		AIN Toolkit Service - Service Establishment Charge, Per State, Initial Setup			CAM	BAPSC		39.67	39.67	40.92	40.92						
		AIN Toolkit Service - Training Session, Per Customer				BAPVX		4,226.54	4,226.54								
		AIN Toolkit Service - Trigger Access Charge, Per Trigger, Per DN, Term. Attempt				BAPTT		7.87	7.87	9.14	9.14						
		AIN Toolkit Service - Trigger Access Charge, Per Trigger, Per DN, Off-Hook Delay				BAPTD		7.87	7.87	9.14	9.14						
		AIN Toolkit Service - Trigger Access Charge, Per Trigger, Per DN, Off-Hook Immediate				BAPTM		7.87	7.87	9.14	9.14						
		AIN Toolkit Service - Trigger Access Charge, Per Trigger, Per DN, 10-Digit PODP				BAPTO		34.67	34.67	14.44	14.44						
		AIN Toolkit Service - Trigger Access Charge, Per Trigger, Per DN, CDP				BAPTC		34.67	34.67	14.44	14.44						
		AIN Toolkit Service - Trigger Access Charge, Per Trigger, Per DN, Feature Code				BAPTF		34.67	34.67	14.44	14.44						
		AIN Toolkit Service - Query Charge, Per Query					0.0535577										
		AIN Toolkit Service - Type 1 Node Charge, Per AIN Toolkit Subscription, Per Node, Per Query					0.0063509										
		AIN Toolkit Service - SCP Storage Charge, Per SMS Access Account, Per 100 Kilobytes					0.06										
		AIN Toolkit Service - Monthly report - Per AIN Toolkit Service Subscription			CAM	BAPMS	11.11	7.87	7.87	5.54	5.54						
		AIN Toolkit Service - Special Study - Per AIN Toolkit Service Subscription			CAM	BAPLS	2.71	8.71	8.71								
		AIN Toolkit Service - Call Event Report - Per AIN Toolkit Service Subscription			CAM	BAPDS	8.48	7.87	7.87	5.54	5.54						
		AIN Toolkit Service - Call Event Special Study - Per AIN Toolkit Service Subscription			CAM	BAPES	0.09	8.71	8.71								
ENHANCED EXTENDED LINK (EELs)																	
	NOTE: The monthly recurring and non-recurring charges below will apply and the Switch-As-Is Charge will not apply for UNE combinations provisioned as ' Ordinarily Combined' Network Elements.																
	NOTE: The monthly recurring and the Switch-As-Is Charge and not the non-recurring charges below will apply for UNE combinations provisioned as ' Currently Combined' Network Elements.																
	EXTENTED 2-WIRE VOICE GRADE EXTENDED LOOP WITH DEDICATED DS1 INTEROFFICE TRANSPORT																
		First 2-Wire VG Loop (SL2) in Combination - Zone 1		1	UNCVX	UEAL2	13.89	105.96	68.28	52.82	10.37						
		First 2-Wire VG Loop (SL2) in Combination - Zone 2		2	UNCVX	UEAL2	18.75	105.96	68.28	52.82	10.37						
		First 2-Wire VG Loop (SL2) in Combination - Zone 3		3	UNCVX	UEAL2	27.55	105.96	68.28	52.82	10.37						
		First 2-Wire VG Loop (SL2) in Combination - Zone 4		4	UNCVX	UEAL2	45.72	105.96	68.28	52.82	10.37						
		Interoffice Transport - Dedicated - DS1 combination - Per Mile per month			UNC1X	1L5XX	0.1813										
		Interoffice Transport - Dedicated - DS1 combination - Facility Termination per month			UNC1X	U1TF1	51.72	89.79	82.28	16.86	14.90						
		1/0 Channelization System in combination Per Month			UNC1X	MQ1	102.85	91.57	62.94	10.87	10.10						
		Voice Grade COCI - Per Month			UNCVX	1D1VG	0.5737	6.62	4.74								
		Each Additional 2-Wire VG Loop (SL 2) in Combination - Zone 1		1	UNCVX	UEAL2	13.89	105.96	68.28	52.82	10.37						
		Each Additional 2-Wire VG Loop (SL 2) in Combination - Zone 2		2	UNCVX	UEAL2	18.75	105.96	68.28	52.82	10.37						
		Each Additional 2-Wire VG Loop (SL 2) in Combination - Zone 3		3	UNCVX	UEAL2	27.55	105.96	68.28	52.82	10.37						
		Each Additional 2-Wire VG Loop (SL 2) in Combination - Zone 4		4	UNCVX	UEAL2	45.72	105.96	68.28	52.82	10.37						
		Voice Grade COCI - Per Month			UNCVX	1D1VG	0.5737	6.62	4.74								

UNBUNDLED NETWORK ELEMENTS - Mississippi														Attachment: 2		Exhibit: A	
CATEGORY		RATE ELEMENTS	Interim	Zone	BCS	USOC	RATES ($)					Svc Order Submitted Elec per LSR	Svc Order Submitted Manually per LSR	Incremental Charge - Manual Svc Order vs. Electronic-1st	Incremental Charge - Manual Svc Order vs. Electronic-Add'l	Incremental Charge - Manual Svc Order vs. Electronic-Disc 1st	Incremental Charge - Manual Svc Order vs. Electronic-Disc Add'l
							Rec	Nonrecurring		Nonrecurring Disconnect		OSS Rates ($)					
								First	Add'l	First	Add'l	SOMEC	SOMAN	SOMAN	SOMAN	SOMAN	SOMAN
		Nonrecurring Currently Combined Network Elements Switch -As-Is Charge			UNC1X	UNCCC		5.63	5.63	7.20	7.20						
	EXTENDED 4-WIRE VOICE GRADE EXTENDED LOOP WITH DEDICATED DS1 INTEROFFICE TRANSPORT																
		First 4-Wire Analog Voice Grade Loop in Combination - Zone 1		1	UNCVX	UEAL4	27.47	132.27	94.59	60.68	14.64						
		First 4-Wire Analog Voice Grade Loop in Combination - Zone 2		2	UNCVX	UEAL4	38.26	132.27	94.59	60.68	14.64						
		First 4-Wire Analog Voice Grade Loop in Combination - Zone 3		3	UNCVX	UEAL4	50.03	132.27	94.59	60.68	14.64						
		First 4-Wire Analog Voice Grade Loop in Combination - Zone 4		4	UNCVX	UEAL4	50.03	132.27	94.59	60.68	14.64						
		Interoffice Transport - Dedicated - DS1 combination - Per Mile Per Month			UNC1X	1L5XX	0.1813										
		Interoffice Transport - Dedicated - DS1 - Facility Termination Per Month			UNC1X	U1TF1	51.72	89.79	82.28	16.86	14.90						
		1/0 Channel System in combination Per Month			UNC1X	MQ1	102.85	91.57	62.94	10.87	10.10						
		Voice Grade COCI in combination - per month			UNCVX	1D1VG	0.5737	6.62	4.74								
		Additional 4-Wire Analog Voice Grade Loop in same DS1 Interoffice Transport Combination - Zone 1		1	UNCVX	UEAL4	27.47	132.27	94.59	60.68	14.64						
		Additional 4-Wire Analog Voice Grade Loop in same DS1 Interoffice Transport Combination - Zone 2		2	UNCVX	UEAL4	38.26	132.27	94.59	60.68	14.64						
		Additional 4-Wire Analog Voice Grade Loop in same DS1 Interoffice Transport Combination - Zone 3		3	UNCVX	UEAL4	50.03	132.27	94.59	60.68	14.64						
		Additional 4-Wire Analog Voice Grade Loop in same DS1 Interoffice Transport Combination - Zone 4		4	UNCVX	UEAL4	50.03	132.27	94.59	60.68	14.64						
		Additional Voice Grade COCI in combination - per month			UNCVX	1D1VG	0.5737	6.62	4.74								
		Nonrecurring Currently Combined Network Elements Switch -As-Is Charge			UNC1X	UNCCC		5.63	5.63	7.20	7.20						
	EXTENDED 4-WIRE 56 KBPS EXTENDED DIGITAL LOOP WITH DEDICATED DS1 INTEROFFICE TRANSPORT																
		First 4-Wire 56Kbps Digital Grade Loop in Combination - Zone 1		1	UNCDX	UDL56	27.44	126.53	88.85	60.68	14.64						
		First 4-Wire 56Kbps Digital Grade Loop in Combination - Zone 2		2	UNCDX	UDL56	34.55	126.53	88.85	60.68	14.64						
		First 4-Wire 56Kbps Digital Grade Loop in Combination - Zone 3		3	UNCDX	UDL56	40.76	126.53	88.85	60.68	14.64						
		First 4-Wire 56Kbps Digital Grade Loop in Combination - Zone 4		4	UNCDX	UDL56	32.25	126.53	88.85	60.68	14.64						
		Interoffice Transport - Dedicated - DS1 combination - Per Mile Per Month			UNC1X	1L5XX	0.1813										
		Interoffice Transport - Dedicated - DS1 - combination Facility Termination Per Month			UNC1X	U1TF1	51.72	89.79	82.28	16.86	14.90						
		1/0 Channel System in combination Per Month			UNC1X	MQ1	102.85	91.57	62.94	10.87	10.10						
		OCU-DP COCI (data) per month (2.4-64kbs)			UNCDX	1D1DD	1.22	6.62	4.74	0.00	0.00						
		Additional 4-Wire 56Kbps Digital Grade Loop in same DS1 Interoffice Transport Combination - Zone 1		1	UNCDX	UDL56	27.44	126.53	88.85	60.68	14.64						
		Additional 4-Wire 56Kbps Digital Grade Loop in same DS1 Interoffice Transport Combination - Zone 2		2	UNCDX	UDL56	34.55	126.53	88.85	60.68	14.64						
		Additional 4-Wire 56Kbps Digital Grade Loop in same DS1 Interoffice Transport Combination - Zone 3		3	UNCDX	UDL56	40.76	126.53	88.85	60.68	14.64						
		Additional 4-Wire 56Kbps Digital Grade Loop in same DS1 Interoffice Transport Combination - Zone 4		4	UNCDX	UDL56	32.25	126.53	88.85	60.68	14.64						
		Additional OCU-DP COCI (data) - in combination per month (2.4-64kbs)			UNCDX	1D1DD	1.22	6.62	4.74	0.00	0.00						
		Nonrecurring Currently Combined Network Elements Switch -As-Is Charge			UNC1X	UNCCC		5.63	5.63	7.20	7.20						
	EXTENDED 4-WIRE 64 KBPS EXTENDED DIGITAL LOOP WITH DEDICATED DS1 INTEROFFICE TRANSPORT																
		First 4-Wire 64Kbps Digital Grade Loop in Combination - Zone 1		1	UNCDX	UDL64	27.44	126.53	88.85	60.68	14.64						

UNBUNDLED NETWORK ELEMENTS - Mississippi														Attachment: 2		Exhibit: A	
CATEGORY		RATE ELEMENTS	Interim	Zone	BCS	USOC	RATES ($)					Svc Order Submitted Elec per LSR	Svc Order Submitted Manually per LSR	Incremental Charge - Manual Svc Order vs. Electronic-1st	Incremental Charge - Manual Svc Order vs. Electronic-Add'l	Incremental Charge - Manual Svc Order vs. Electronic-Disc 1st	Incremental Charge - Manual Svc Order vs. Electronic-Disc Add'l
							Rec	Nonrecurring		Nonrecurring Disconnect		OSS Rates ($)					
								First	Add'l	First	Add'l	SOMEC	SOMAN	SOMAN	SOMAN	SOMAN	SOMAN
		First 4-Wire 64Kbps Digital Grade Loop in Combination - Zone 2		2	UNCDX	UDL64	34.55	126.53	88.85	60.68	14.64						
		First 4-Wire 64Kbps Digital Grade Loop in Combination - Zone 3		3	UNCDX	UDL64	40.76	126.53	88.85	60.68	14.64						
		First 4-Wire 64Kbps Digital Grade Loop in Combination - Zone 4		4	UNCDX	UDL64	32.25	126.53	88.85	60.68	14.64						
		Interoffice Transport - Dedicated - DS1 combination - Per Mile Per Month			UNC1X	1L5XX	0.1813										
		interoffice Transport - Dedicated - DS1 combination - Facility Termination Per Month			UNC1X	U1TF1	51.72	89.79	82.28	16.86	14.90						
		1/0 Channel System in combination Per Month			UNC1X	MQ1	102.85	91.57	62.94	10.87	10.10						
		OCU-DP COCI (data) - in combination - per month (2.4-64kbs)			UNCDX	1D1DD	1.22	6.62	4.74	0.00	0.00						
		Additional 4-Wire 64Kbps Digital Grade Loop in same DS1 Interoffice Transport Combination - Zone 1		1	UNCDX	UDL64	27.44	126.53	88.85	60.68	14.64						
		Additional 4-Wire 64Kbps Digital Grade Loop in same DS1 Interoffice Transport Combination - Zone 2		2	UNCDX	UDL64	34.55	126.53	88.85	60.68	14.64						
		Additional 4-Wire 64Kbps Digital Grade Loop in same DS1 Interoffice Transport Combination - Zone 3		3	UNCDX	UDL64	40.76	126.53	88.85	60.68	14.64						
		Additional 4-Wire 64Kbps Digital Grade Loop in same DS1 Interoffice Transport Combination - Zone 4		4	UNCDX	UDL64	32.25	126.53	88.85	60.68	14.64						
		Additional OCU-DP COCI (data) - in combination - per month (2.4-64kbs)			UNCDX	1D1DD	1.22	6.62	4.74	0.00	0.00						
		Nonrecurring Currently Combined Network Elements Switch -As-Is Charge			UNC1X	UNCCC		5.63	5.63	7.20	7.20						
	EXTENDED 4-WIRE DS1 DIGITAL EXTENDED LOOP WITH DEDICATED DS1 INTEROFFICE TRANSPORT																
		4-Wire DS1 Digital Loop in Combination - Zone 1		1	UNC1X	USLXX	79.08	253.93	158.45	46.10	12.07						
		4-Wire DS1 Digital Loop in Combination - Zone 2		2	UNC1X	USLXX	129.38	253.93	158.45	46.10	12.07						
		4-Wire DS1 Digital Loop in Combination - Zone 3		3	UNC1X	USLXX	206.74	253.93	158.45	46.10	12.07						
		4-Wire DS1 Digital Loop in Combination - Zone 4		4	UNC1X	USLXX	458.46	253.93	158.45	46.10	12.07						
		Interoffice Transport - Dedicated - DS1 combination - Per Mile Per Month			UNC1X	1L5XX	0.1813										
		Interoffice Transport - Dedicated - DS1 combination - Facility Termination Per Month			UNC1X	U1TF1	51.72	89.79	82.28	16.86	14.90						
		Nonrecurring Currently Combined Network Elements Switch -As-Is Charge			UNC1X	UNCCC		5.63	5.63	7.20	7.20						
	EXTENDED 4-WIRE DS1 DIGITAL EXTENDED LOOP WITH DEDICATED DS3 INTEROFFICE TRANSPORT																
		First DS1Loop in Combination - Zone 1		1	UNC1X	USLXX	79.08	253.93	158.45	46.10	12.07						
		First DS1Loop in Combination - Zone 2		2	UNC1X	USLXX	129.38	253.93	158.45	46.10	12.07						
		First DS1Loop in Combination - Zone 3		3	UNC1X	USLXX	206.74	253.93	158.45	46.10	12.07						
		First DS1Loop in Combination - Zone 4		4	UNC1X	USLXX	458.46	253.93	158.45	46.10	12.07						
		Interoffice Transport - Dedicated - DS3 combination - Per Mile Per Month			UNC3X	1L5XX	4.29										
		Interoffice Transport - Dedicated - DS3 - Facility Termination per month			UNC3X	U1TF3	641.90	280.37	163.70	62.08	60.29						
		3/1Channel System in combination per month			UNC3X	MQ3	170.63	179.17	94.52	34.30	32.82						
		DS1 COCI in combination per month			UNC1X	UC1D1	2.62	6.62	4.74	0.00	0.00						
		Additional DS1Loop in DS3 Interoffice Transport Combination - Zone 1		1	UNC1X	USLXX	79.08	253.93	158.45	46.10	12.07						
		Additional DS1Loop in DS3 Interoffice Transport Combination - Zone 2		2	UNC1X	USLXX	129.38	253.93	158.45	46.10	12.07						
		Additional DS1Loop in DS3 Interoffice Transport Combination - Zone 3		3	UNC1X	USLXX	206.74	253.93	158.45	46.10	12.07						
		Additional DS1Loop in DS3 Interoffice Transport Combination - Zone 4		4	UNC1X	USLXX	458.46	253.93	158.45	46.10	12.07						
		Additoinal DS1 COCI in combination per month			UNC1X	UC1D1	2.62	6.62	4.74	0.00	0.00						
		Nonrecurring Currently Combined Network Elements Switch -As-Is Charge			UNC3X	UNCCC		5.63	5.63	7.20	7.20						
	EXTENDED 2-WIRE VOICE GRADE EXTENDED LOOP/ 2 WIRE VOICE GRADE INTEROFFICE TRANSPORT																
		2-WireVG Loop in combination - Zone 1		1	UNCVX	UEAL2	13.89	105.96	68.28	52.82	10.37						

UNBUNDLED NETWORK ELEMENTS - Mississippi														Attachment: 2		Exhibit: A	
CATEGORY		RATE ELEMENTS	Interim	Zone	BCS	USOC	RATES ($)					Svc Order Submitted Elec per LSR	Svc Order Submitted Manually per LSR	Incremental Charge - Manual Svc Order vs. Electronic-1st	Incremental Charge - Manual Svc Order vs. Electronic-Add'l	Incremental Charge - Manual Svc Order vs. Electronic-Disc 1st	Incremental Charge - Manual Svc Order vs. Electronic-Disc Add'l
							Rec	Nonrecurring		Nonrecurring Disconnect		OSS Rates ($)					
								First	Add'l	First	Add'l	SOMEC	SOMAN	SOMAN	SOMAN	SOMAN	SOMAN
		2-WireVG Loop in combination - Zone 2		2	UNCVX	UEAL2	18.75	105.96	68.28	52.82	10.37						
		2-WireVG Loop in combination - Zone 3		3	UNCVX	UEAL2	27.55	105.96	68.28	52.82	10.37						
		2-WireVG Loop in combination - Zone 4		4	UNCVX	UEAL2	45.72	105.96	68.28	52.82	10.37						
		Interoffice Transport - 2-wire VG - Dedicated- Per Mile Per Month			UNCVX	1L5XX	0.00088										
		Interoffice Transport - 2-wire VG - Dedicated - Facility Termination per month			UNCVX	U1TV2	20.32	40.77	27.57	17.26	7.11						
		Nonrecurring Currently Combined Network Elements Switch -As-Is Charge			UNCVX	UNCCC		5.63	5.63	7.20	7.20						
	EXTENDED 4-WIRE VOICE GRADE EXTENDED LOOP/ 4 WIRE VOICE GRADE INTEROFFICE TRANSPORT																
		4-WireVG Loop in combination - Zone 1		1	UNCVX	UEAL4	27.47	132.27	94.59	60.68	14.64						
		4-WireVG Loop in combination - Zone 2		2	UNCVX	UEAL4	38.26	132.27	94.59	60.68	14.64						
		4-WireVG Loop in combination - Zone 3		3	UNCVX	UEAL4	50.03	132.27	94.59	60.68	14.64						
		4-WireVG Loop in combination - Zone 4		4	UNCVX	UEAL4	50.03	132.27	94.59	60.68	14.64						
		Interoffice Transport - 4-wire VG - Dedicated - Per Mile Per Month			UNCVX	1L5XX	0.00088										
		Interoffice Transport - 4-wire VG - Dedicated - Facility Termination per month			UNCVX	U1TV4	17.86	40.77	27.57	17.26	7.11						
		Nonrecurring Currently Combined Network Elements Switch -As-Is Charge			UNCVX	UNCCC		5.63	5.63	7.20	7.20						
	EXTENDED DS3 DIGITAL EXTENDED LOOP WITH DEDICATED DS3 INTEROFFICE TRANSPORT																
		DS3 Local Loop in combination - per mile per month			UNC3X	1L5ND	11.20										
		DS3 Local Loop in combination - Facility Termination per month			UNC3X	UE3PX	252.17	454.13	265.47	123.23	86.19						
		Interoffice Transport - Dedicated - DS3 - Per Mile per month			UNC3X	1L5XX	4.29										
		Interoffice Transport - Dedicated - DS3 combination - Facility Termination per month			UNC3X	U1TF3	641.90	280.37	163.70	62.08	60.29						
		Nonrecurring Currently Combined Network Elements Switch -As-Is Charge			UNC3X	UNCCC		5.63	5.63	7.20	7.20						
	EXTENDED STS-1 DIGITAL EXTENDED LOOP WITH DEDICATED STS-1 INTEROFFICE TRANSPORT																
		STS-1 Local Lolp in combination - per mile per month			UNCSX	1L5ND	11.20										
		STS-1 Local Loop in combination - Facility Termination per month			UNCSX	UDLS1	264.35	454.13	265.47	123.23	86.19						
		Interoffice Transport - Dedicated - STS-1 combination - per mile per month			UNCSX	1L5XX	4.29										
		Interoffice Transport - Dedicated - STS-1 combination - Facility Termination per month			UNCSX	U1TFS	644.21	280.37	163.70	62.08	60.29						
		Nonrecurring Currently Combined Network Elements Switch -As-Is Charge			UNCSX	UNCCC		5.63	5.63	7.20	7.20						
	EXTENDED 2-WIRE ISDN EXTENDED LOOP WITH DS1 INTEROFFICE TRANSPORT																
		First 2-Wire ISDN Loop in Combination - Zone 1		1	UNCNX	U1L2X	21.01	117.61	79.92	52.82	10.37						
		First 2-Wire ISDN Loop in Combination - Zone 2		2	UNCNX	U1L2X	27.59	117.61	79.92	52.82	10.37						
		First 2-Wire ISDN Loop in Combination - Zone 3		3	UNCNX	U1L2X	37.34	117.61	79.92	52.82	10.37						
		First 2-Wire ISDN Loop in Combination - Zone 4		4	UNCNX	U1L2X	59.18	117.61	79.92	52.82	10.37						
		Interoffice Transport - Dedicated - DS1 combination - per mile per month			UNC1X	1L5XX	0.1813										
		Interoffice Transport - Dedicated - DS1 combination - Facility Termination per month			UNC1X	U1TF1	51.72	89.79	82.28	16.86	14.90						
		1/0 Channel System in combination - per month			UNC1X	MQ1	102.85	91.57	62.94	10.87	10.10						
		2-wire ISDN COCI (BRITE) - in combination - per month			UNCNX	UC1CA	2.62	6.62	4.74	0.00	0.00						
		Additional 2-wire ISDN Loop in same DS1Interoffice Transport Combination - Zone 1		1	UNCNX	U1L2X	21.01	117.61	79.92	52.82	10.37						
		Additional 2-wire ISDN Loop in same DS1Interoffice Transport Combination - Zone 2		2	UNCNX	U1L2X	27.59	117.61	79.92	52.82	10.37						
		Additional 2-wire ISDN Loop in same DS1Interoffice Transport Combination - Zone 3		3	UNCNX	U1L2X	37.34	117.61	79.92	52.82	10.37						
		Additional 2-wire ISDN Loop in same DS1Interoffice Transport Combination - Zone 4		4	UNCNX	U1L2X	59.18	117.61	79.92	52.82	10.37						

UNBUNDLED NETWORK ELEMENTS - Mississippi														Attachment: 2		Exhibit: A	
CATEGORY		RATE ELEMENTS	Interim	Zone	BCS	USOC	RATES ($)					Svc Order Submitted Elec per LSR	Svc Order Submitted Manually per LSR	Incremental Charge - Manual Svc Order vs. Electronic-1st	Incremental Charge - Manual Svc Order vs. Electronic-Add'l	Incremental Charge - Manual Svc Order vs. Electronic-Disc 1st	Incremental Charge - Manual Svc Order vs. Electronic-Disc Add'l
							Rec	Nonrecurring		Nonrecurring Disconnect		OSS Rates ($)					
								First	Add'l	First	Add'l	SOMEC	SOMAN	SOMAN	SOMAN	SOMAN	SOMAN
		Additional 2-wire ISDN COCI (BRITE) - in combination- per month			UNCNX	UC1CA	2.62	6.62	4.74	0.00	0.00						
		Nonrecurring Currently Combined Network Elements Switch -As-Is Charge			UNC1X	UNCCC		5.63	5.63	7.20	7.20						
	EXTENDED 4-WIRE DS1 DIGITAL EXTENDED LOOP WITH DEDICATED STS-1 INTEROFFICE TRANSPORT																
		First DS1 Loop Combination - Zone 1		1	UNC1X	USLXX	79.08	253.93	158.45	46.10	12.07						
		First DS1 Loop Combination - Zone 2		2	UNC1X	USLXX	129.38	253.93	158.45	46.10	12.07						
		First DS1 Loop Combination - Zone 3		3	UNC1X	USLXX	206.74	253.93	158.45	46.10	12.07						
		First DS1 Loop Combination - Zone 4		4	UNC1X	USLXX	458.46	253.93	158.45	46.10	12.07						
		Interoffice Transport - Dedicated - STS-1 combination - Per Mile Per Month			UNCSX	1L5XX	4.29										
		Interoffice Transport - Dedicated - STS-1 combination - Facility Termination per month			UNCSX	U1TFS	644.21	280.37	163.70	62.08	60.29						
		3/1 Channel System in combination per month			UNCSX	MQ3	170.63	179.17	94.52	34.30	32.82						
		DS1 COCI in combination per month			UNC1X	UC1D1	2.62	6.62	4.74	0.00	0.00						
		Additional DS1Loop in the same STS-1 Interoffice Transport Combination - Zone 1		1	UNC1X	USLXX	79.08	253.93	158.45	46.10	12.07						
		Additional DS1Loop in the same STS-1 Interoffice Transport Combination - Zone 2		2	UNC1X	USLXX	129.38	253.93	158.45	46.10	12.07						
		Additional DS1Loop in the same STS-1 Interoffice Transport Combination - Zone 3		3	UNC1X	USLXX	206.74	253.93	158.45	46.10	12.07						
		Additional DS1Loop in the same STS-1 Interoffice Transport Combination - Zone 4		4	UNC1X	USLXX	458.46	253.93	158.45	46.10	12.07						
		DS1 COCI in combination per month			UNC1X	UC1D1	2.62	6.62	4.74	0.00	0.00						
		Nonrecurring Currently Combined Network Elements Switch -As-Is Charge			UNCSX	UNCCC		5.63	5.63	7.20	7.20						
	EXTENDED 4-WIRE 56 KBPS DIGITAL EXTENDED LOOP WITH 56 KBPS INTEROFFICE TRANSPORT																
		4-wire 56 kbps Local Loop in combination - Zone 1		1	UNCDX	UDL56	27.44	126.53	88.85	60.68	14.64						
		4-wire 56 kbps Local Loop in combination - Zone 2		2	UNCDX	UDL56	34.55	126.53	88.85	60.68	14.64						
		4-wire 56 kbps Local Loop in combination - Zone 3		3	UNCDX	UDL56	40.76	126.53	88.85	60.68	14.64						
		4-wire 56 kbps Local Loop in combination - Zone 4		4	UNCDX	UDL56	32.25	126.53	88.85	60.68	14.64						
		Interoffice Transport - Dedicated - 4-wire 56 kbps combination - Per Mile per month			UNCDX	1L5XX	0.0098										
		Interoffice Transport - Dedicated - 4-wire 56 kbps combination - Facility Termination per month			UNCDX	U1TD5	22.52	40.78	27.57	17.26	7.11						
		Nonrecurring Currently Combined Network Elements Switch -As-Is Charge			UNCDX	UNCCC		5.63	5.63	7.20	7.20						
	EXTENDED 4-WIRE 64 KBPS DIGITAL EXTENDED LOOP WITH 64 KBPS INTEROFFICE TRANSPORT																
		4-wire 64 kbps Lcoal Loop in Combination - Zone 1		1	UNCDX	UDL64	27.44	126.53	88.85	60.68	14.64						
		4-wire 64 kbps Lcoal Loop in Combination - Zone 2		2	UNCDX	UDL64	34.55	126.53	88.85	60.68	14.64						
		4-wire 64 kbps Lcoal Loop in Combination - Zone 3		3	UNCDX	UDL64	40.76	126.53	88.85	60.68	14.64						
		4-wire 64 kbps Lcoal Loop in Combination - Zone 4		4	UNCDX	UDL64	32.25	126.53	88.85	60.68	14.64						
		Interoffice Transport - Dedicated - 4-wire 64 kbps combination - Per Mile per month			UNCDX	1L5XX	0.0098										
		Interoffice Transport - Dedicated - 4-wire 64 kbps combination - Facility Termination per month			UNCDX	U1TD6	22.52	40.78	27.57	17.26	7.11						
		Nonrecurring Currently Combined Network Elements Switch -As-Is Charge			UNCDX	UNCCC		5.63	5.63	7.20	7.20						
	EXTENDED 2-WIRE VOICE GRADE LOOP WITH DS1 INTEROFFICE TRANSPORT w/ 3/1 MUX																
		First 2-wire VG Loop (SL2) in Combination - Zone 1		1	UNCVX	UEAL2	13.89	105.96	68.28	52.82	10.37						
		First 2-wire VG Loop (SL2) in Combination - Zone 2		2	UNCVX	UEAL2	18.75	105.96	68.28	52.82	10.37						
		First 2-wire VG Loop (SL2) in Combination - Zone 3		3	UNCVX	UEAL2	27.55	105.96	68.28	52.82	10.37						
		First 2-wire VG Loop (SL2) in Combination - Zone 4		4	UNCVX	UEAL2	45.72	105.96	68.28	52.82	10.37						
		First Interoffice Transport - Dedicated - DS1 combination - Per Mile			UNC1X	1L5XX	0.1813										
		First Interoffice Transport - Dedicated - DS1 combination - Facility Termination per month			UNC1X	U1TF1	51.72	89.79	82.28	16.86	14.90						
		Per each DS1 Channelization System Per Month			UNC1X	MQ1	102.85	91.57	62.94	10.87	10.10						
		Per each Voice Grade COCI - Per Month per month			UNCVX	1D1VG	0.5737	6.62	4.74								

UNBUNDLED NETWORK ELEMENTS - Mississippi														Attachment: 2		Exhibit: A	
CATEGORY		RATE ELEMENTS	Interim	Zone	BCS	USOC	RATES ($)					Svc Order Submitted Elec per LSR	Svc Order Submitted Manually per LSR	Incremental Charge - Manual Svc Order vs. Electronic-1st	Incremental Charge - Manual Svc Order vs. Electronic-Add'l	Incremental Charge - Manual Svc Order vs. Electronic-Disc 1st	Incremental Charge - Manual Svc Order vs. Electronic-Disc Add'l
							Rec	Nonrecurring		Nonrecurring Disconnect		OSS Rates ($)					
								First	Add'l	First	Add'l	SOMEC	SOMAN	SOMAN	SOMAN	SOMAN	SOMAN
		3/1 Channel System in combination per month			UNC3X	MQ3	170.63	179.17	94.52	34.30	32.82						
		Per each DS1 COCI in combination per month			UNC1X	UC1D1	2.62	6.62	4.74	0.00	0.00						
		Each Additional 2-Wire VG Loop(SL 2) in the same DS1 Interoffice Transport Combination - Zone 1		1	UNCVX	UEAL2	13.89	105.96	68.28	52.82	10.37						
		Each Additional 2-Wire VG Loop(SL2) in the same DS1 Interoffice Transport Combination - Zone 2		2	UNCVX	UEAL2	18.75	105.96	68.28	52.82	10.37						
		Each Additional 2-Wire VG Loop(SL2) in the same DS1 Interoffice Transport Combination - Zone 3		3	UNCVX	UEAL2	27.55	105.96	68.28	52.82	10.37						
		Each Additional 2-Wire VG Loop(SL2) in the same DS1 Interoffice Transport Combination - Zone 4		4	UNCVX	UEAL2	45.72	105.96	68.28	52.82	10.37						
		Each Additional Voice Grade COCI in combination - per month			UNCVX	1D1VG	0.5737	6.62	4.74								
		Each Additional DS1 Interoffice Channel per mile in same 3/1 Channel System per month			UNC1X	1L5XX	0.1813										
		Each Additional DS1 Interoffice Channel Facility Termination in same 3/1 Channel System per month			UNC1X	U1TF1	51.72	89.79	82.28	16.86	14.90						
		Each Additional DS1 COCI combination per month			UNC1X	UC1D1	2.62	6.62	4.74	0.00	0.00						
		Nonrecurring Currently Combined Network Elements Switch -As-Is Charge			UNC1X	UNCCC		5.63	5.63	7.20	7.20						
	EXTENDED 4-WIRE VOICE GRADE LOOP WITH DEDICATED DS1 INTEROFFICE TRANSPORT w/ 3/1 MUX																
		First 4-Wire Analog Voice Grade Local Loop in Combination - Zone 1		1	UNCVX	UEAL4	27.47	132.27	94.59	60.68	14.64						
		First 4-Wire Analog Voice Grade Local Loop in Combination - Zone 2		2	UNCVX	UEAL4	38.26	132.27	94.59	60.68	14.64						
		First 4-Wire Analog Voice Grade Local Loop in Combination - Zone 3		3	UNCVX	UEAL4	50.03	132.27	94.59	60.68	14.64						
		First 4-Wire Analog Voice Grade Local Loop in Combination - Zone 4		4	UNCVX	UEAL4	50.03	132.27	94.59	60.68	14.64						
		First Interoffice Transport - Dedicated - DS1 combination - Per Mile Per Month			UNC1X	1L5XX	0.1813										
		First Interoffice Transport - Dedicated - DS1 - Facility Termination Per Month			UNC1X	U1TF1	51.72	89.79	82.28	16.86	14.90						
		Per each 1/0 Channel System in combination Per Month			UNC1X	MQ1	102.85	91.57	62.94	10.87	10.10						
		Per each Voice Grade COCI in combination - per month			UNCVX	1D1VG	0.5737	6.62	4.74								
		3/1 Channel System in combination per month			UNC3X	MQ3	170.63	179.17	94.52	34.30	32.82						
		Per each DS1 COCI in combination per month			UNC1X	UC1D1	2.62	6.62	4.74	0.00	0.00						
		Additional 4-Wire Analog Voice Grade Loop in same DS1 Interoffice Transport Combination - Zone 1		1	UNCVX	UEAL4	27.47	132.27	94.59	60.68	14.64						
		Additional 4-Wire Analog Voice Grade Loop in same DS1 Interoffice Transport Combination - Zone 2		2	UNCVX	UEAL4	38.26	132.27	94.59	60.68	14.64						
		Additional 4-Wire Analog Voice Grade Loop in same DS1 Interoffice Transport Combination - Zone 3		3	UNCVX	UEAL4	50.03	132.27	94.59	60.68	14.64						
		Additional 4-Wire Analog Voice Grade Loop in same DS1 Interoffice Transport Combination - Zone 4		4	UNCVX	UEAL4	50.03	132.27	94.59	60.68	14.64						
		Each Additional DS1 Interoffice Channel per mile in same 3/1 Channel System per month			UNC1X	1L5XX	0.1813										
		Each Additional DS1 Interoffice Channel Facility Termination in same 3/1 Channel System per month			UNC1X	U1TF1	51.72	89.79	82.28	16.86	14.90						
		Additional Voice Grade COCI - in combination - per month			UNCVX	1D1VG	0.5737	6.62	4.74								
		Nonrecurring Currently Combined Network Elements Switch -As-Is Charge			UNC1X	UNCCC		5.63	5.63	7.20	7.20						
	EXTENDED 4-WIRE 56 KBPS DIGITAL LOOP WITH DEDICATED DS1 INTEROFFICE TRANSPORT w/ 3/1 MUX																
		First 4-Wire 56Kbps Digital Grade Local Loop in Combination - Zone 1		1	UNCDX	UDL56	27.44	126.53	88.85	60.68	14.64						
		First 4-Wire 56Kbps Digital Grade Local Loop in Combination - Zone 2		2	UNCDX	UDL56	34.55	126.53	88.85	60.68	14.64						
		First 4-Wire 56Kbps Digital Grade Local Loop in Combination - Zone 3		3	UNCDX	UDL56	40.76	126.53	88.85	60.68	14.64						
		First 4-Wire 56Kbps Digital Grade Local Loop in Combination - Zone 4		4	UNCDX	UDL56	32.25	126.53	88.85	60.68	14.64						

UNBUNDLED NETWORK ELEMENTS - Mississippi														Attachment: 2		Exhibit: A	
CATEGORY		RATE ELEMENTS	Interim	Zone	BCS	USOC	RATES ($)					Svc Order Submitted Elec per LSR	Svc Order Submitted Manually per LSR	Incremental Charge - Manual Svc Order vs. Electronic-1st	Incremental Charge - Manual Svc Order vs. Electronic-Add'l	Incremental Charge - Manual Svc Order vs. Electronic-Disc 1st	Incremental Charge - Manual Svc Order vs. Electronic-Disc Add'l
							Rec	Nonrecurring		Nonrecurring Disconnect		OSS Rates ($)					
								First	Add'l	First	Add'l	SOMEC	SOMAN	SOMAN	SOMAN	SOMAN	SOMAN
		First Interoffice Transport - Dedicated - DS1 combination - Per Mile Per Month			UNC1X	1L5XX	0.1813										
		First Interoffice Transport - Dedicated - DS1 - combination Facility Termination Per Month			UNC1X	U1TF1	51.72	89.79	82.28	16.86	14.90						
		Per each 1/0 Channel System in combination Per Month			UNC1X	MQ1	102.85	91.57	62.94	10.87	10.10						
		Per each OCU-DP COCI (data) COCI per month (2.4-64kbs)			UNCDX	1D1DD	1.22	6.62	4.74	0.00	0.00						
		3/1 Channel System in combination per month			UNC3X	MQ3	170.63	179.17	94.52	34.30	32.82						
		Per each DS1 COCI in combination per month			UNC1X	UC1D1	2.62	6.62	4.74	0.00	0.00						
		Additional 4-Wire 56Kbps Digital Grade Loop in same DS1 Interoffice Transport Combination - Zone 1		1	UNCDX	UDL56	27.44	126.53	88.85	60.68	14.64						
		Additional 4-Wire 56Kbps Digital Grade Loop in same DS1 Interoffice Transport Combination - Zone 2		2	UNCDX	UDL56	34.55	126.53	88.85	60.68	14.64						
		Additional 4-Wire 56Kbps Digital Grade Loop in same DS1 Interoffice Transport Combination - Zone 3		3	UNCDX	UDL56	40.76	126.53	88.85	60.68	14.64						
		Additional 4-Wire 56Kbps Digital Grade Loop in same DS1 Interoffice Transport Combination - Zone 4		4	UNCDX	UDL56	32.25	126.53	88.85	60.68	14.64						
		OCU-DP COCI (data) COCI in combination per month (2.4-64kbs)			UNCDX	1D1DD	1.22	6.62	4.74	0.00	0.00						
		Each Additional DS1 Interoffice Channel per mile in same 3/1 Channel System per month			UNC1X	1L5XX	0.1813										
		Each Additional DS1 Interoffice Channel Facility Termination in same 3/1 Channel System per month			UNC1X	U1TF1	51.72	89.79	82.28	16.86	14.90						
		Each Additional DS1 COCI in the same 3/1 channel system combination per month			UNC1X	UC1D1	2.62	6.62	4.74	0.00	0.00						
		Nonrecurring Currently Combined Network Elements Switch -As-Is Charge			UNC1X	UNCCC		5.63	5.63	7.20	7.20						
	EXTENDED 4-WIRE 64 KBPS DIGITAL LOOP WITH DEDICATED DS1 INTEROFFICE TRANSPORT w/ 3/1 MUX																
		First 4-Wire 64Kbps Digital Grade Loop in a DS1 Interoffice Transport Combination - Zone 1		1	UNCDX	UDL64	27.44	126.53	88.85	60.68	14.64						
		First 4-Wire 64Kbps Digital Grade Loop in a DS1 Interoffice Transport Combination - Zone 2		2	UNCDX	UDL64	34.55	126.53	88.85	60.68	14.64						
		First 4-Wire 64Kbps Digital Grade Loop in a DS1 Interoffice Transport Combination - Zone 3		3	UNCDX	UDL64	40.76	126.53	88.85	60.68	14.64						
		First 4-Wire 64Kbps Digital Grade Loop in a DS1 Interoffice Transport Combination - Zone 4		4	UNCDX	UDL64	32.25	126.53	88.85	60.68	14.64						
		First Interoffice Transport - Dedicated - DS1 combination - Per Mile Per Month			UNC1X	1L5XX	0.1813										
		First Interoffice Transport - Dedicated - DS1 combination - Facility Termination Per Month			UNC1X	U1TF1	51.72	89.79	82.28	16.86	14.90						
		Per each Channel System 1/0 in combination Per Month			UNC1X	MQ1	102.85	91.57	62.94	10.87	10.10						
		Per each OCU-DP COCI (data) in combination - per month (2.4-64kbs)			UNCDX	1D1DD	1.22	6.62	4.74	0.00	0.00						
		3/1 Channel System in combination per month			UNC3X	MQ3	170.63	179.17	94.52	34.30	32.82						
		Per each DS1 COCI in combination per month			UNC1X	UC1D1	2.62	6.62	4.74	0.00	0.00						
		Additional 4-Wire 64Kbps Digital Grade Loop in same DS1 Interoffice Transport Combination - Zone 1		1	UNCDX	UDL64	27.44	126.53	88.85	60.68	14.64						
		Additional 4-Wire 64Kbps Digital Grade Loop in same DS1 Interoffice Transport Combination - Zone 2		2	UNCDX	UDL64	34.55	126.53	88.85	60.68	14.64						
		Additional 4-Wire 64Kbps Digital Grade Loop in same DS1 Interoffice Transport Combination - Zone 3		3	UNCDX	UDL64	40.76	126.53	88.85	60.68	14.64						
		Additional 4-Wire 64Kbps Digital Grade Loop in same DS1 Interoffice Transport Combination - Zone 4		4	UNCDX	UDL64	32.25	126.53	88.85	60.68	14.64						
		Additional OCU-DP COCI (data) - DS1 to DS0 Channel System combination - per month (2.4-64kbs)			UNCDX	1D1DD	1.22	6.62	4.74	0.00	0.00						
		Each Additional DS1 Interoffice Channel per mile in same 3/1 Channel System per month			UNC1X	1L5XX	0.1813										
		Each Additional DS1 Interoffice Channel Facility Termination in same 3/1 Channel System per month			UNC1X	U1TF1	51.72	89.79	82.28	16.86	14.90						

UNBUNDLED NETWORK ELEMENTS - Mississippi														Attachment: 2		Exhibit: A	
CATEGORY		RATE ELEMENTS	Interim	Zone	BCS	USOC	RATES ($)					Svc Order Submitted Elec per LSR	Svc Order Submitted Manually per LSR	Incremental Charge - Manual Svc Order vs. Electronic-1st	Incremental Charge - Manual Svc Order vs. Electronic-Add'l	Incremental Charge - Manual Svc Order vs. Electronic-Disc 1st	Incremental Charge - Manual Svc Order vs. Electronic-Disc Add'l
							Rec	Nonrecurring		Nonrecurring Disconnect		OSS Rates ($)					
								First	Add'l	First	Add'l	SOMEC	SOMAN	SOMAN	SOMAN	SOMAN	SOMAN
		Each Additional DS1 COCI in the same 3/1 channel system combination per month			UNC1X	UC1D1	2.62	6.62	4.74	0.00	0.00						
		Nonrecurring Currently Combined Network Elements Switch -As-Is Charge			UNC1X	UNCCC		5.63	5.63	7.20	7.20						
	EXTENDED 2-WIRE ISDN LOOP WITH DS1 INTEROFFICE TRANSPORT w/ 3/1 MUX																
		First 2-Wire ISDN Loop in a DS1 Interoffice Combination Transport - Zone 1		1	UNCNX	U1L2X	21.01	117.61	79.92	52.82	10.37						
		First 2-Wire ISDN Loop in a DS1 Interoffice Combination Transport - Zone 2		2	UNCNX	U1L2X	27.59	117.61	79.92	52.82	10.37						
		First 2-Wire ISDN Loop in a DS1 Interoffice Combination Transport - Zone 3		3	UNCNX	U1L2X	37.34	117.61	79.92	52.82	10.37						
		First 2-Wire ISDN Loop in a DS1 Interoffice Combination Transport - Zone 4		4	UNCNX	U1L2X	59.18	117.61	79.92	52.82	10.37						
		First Interoffice Transport - Dedicated - DS1 combination - Per Mile per month			UNC1X	1L5XX	0.1813										
		First Interoffice Transport - Dedicated - DS1 combination - Facility Termination per month			UNC1X	U1TF1	51.72	89.79	82.28	16.86	14.90						
		Per each Channel System 1/0 in combination - per month			UNC1X	MQ1	102.85	91.57	62.94	10.87	10.10						
		Per each 2-wire ISDN COCI (BRITE) in combination - per month			UNCNX	UC1CA	2.62	6.62	4.74	0.00	0.00						
		3/1 Channel System in combination per month			UNC3X	MQ3	170.63	179.17	94.52	34.30	32.82						
		Per each DS1 COCI in combination per month			UNC1X	UC1D1	2.62	6.62	4.74	0.00	0.00						
		Additional 2-wire ISDN Loop in same DS1Interoffice Transport Combination - Zone 1		1	UNCNX	U1L2X	21.01	117.61	79.92	52.82	10.37						
		Additional 2-wire ISDN Loop in same DS1Interoffice Transport Combination - Zone 2		2	UNCNX	U1L2X	27.59	117.61	79.92	52.82	10.37						
		Additional 2-wire ISDN Loop in same DS1Interoffice Transport Combination - Zone 3		3	UNCNX	U1L2X	37.34	117.61	79.92	52.82	10.37						
		Additional 2-wire ISDN Loop in same DS1Interoffice Transport Combination - Zone 4		4	UNCNX	U1L2X	59.18	117.61	79.92	52.82	10.37						
		Additional 2-wire ISDN COCI (BRITE) in same 1/0 channel system combination- per month			UNCNX	UC1CA	2.62	6.62	4.74	0.00	0.00						
		Each Additional DS1 Interoffice Channel per mile in same 3/1 Channel System per month			UNC1X	1L5XX	0.1813										
		Each Additional DS1 Interoffice Channel Facility Termination in same 3/1 Channel System per month			UNC1X	U1TF1	51.72	89.79	82.28	16.86	14.90						
		Each Additional DS1 COCI in the same 3/1 channel system combination per month			UNC1X	UC1D1	2.62	6.62	4.74	0.00	0.00						
		Nonrecurring Currently Combined Network Elements Switch -As-Is Charge			UNC1X	UNCCC		5.63	5.63	7.20	7.20						
	EXTENDED 4-WIRE DS1 LOOP WITH DEDICATED DS1 INTEROFFICE TRANSPORT w/ 3/1 MUX																
		First 4-wire DS1 Digital Lcoal Loop in Combination - Zone 1		1	UNC1X	USLXX	79.08	253.93	158.45	46.10	12.07						
		First 4-wire DS1 Digital Lcoal Loop in Combination - Zone 2		2	UNC1X	USLXX	129.38	253.93	158.45	46.10	12.07						
		First 4-wire DS1 Digital Lcoal Loop in Combination - Zone 3		3	UNC1X	USLXX	206.74	253.93	158.45	46.10	12.07						
		First 4-wire DS1 Digital Lcoal Loop in Combination - Zone 4		4	UNC1X	USLXX	458.46	253.93	158.45	46.10	12.07						
		First Interoffice Transport - Dedicated - DS1 combination - Per Mile Per Month			UNC1X	1L5XX	0.1813										
		First Interoffice Transport - Dedicated - DS1 combination - Facility Termination Per Month			UNC1X	U1TF1	51.72	89.79	82.28	16.86	14.90						
		3/1 Channel System in combination per month			UNC3X	MQ3	170.63	179.17	94.52	34.30	32.82						
		Per each DS1 COCI combination per month			UNC1X	UC1D1	2.62	6.62	4.74	0.00	0.00						
		Each Additional DS1 Interoffice Channel per mile in same 3/1 Channel System per month			UNC1X	1L5XX	0.1813										
		Each Additional DS1 Interoffice Channel Facility Termination in same 3/1 Channel System per month			UNC1X	U1TF1	51.72	89.79	82.28	16.86	14.90						
		Each Additional DS1 COCI in the same 3/1 channel system combination per month			UNC1X	UC1D1	2.62	6.62	4.74	0.00	0.00						
		Additional 4-Wire DS1 Digital Local Loop in Combination - Zone 1		1	UNC1X	USLXX	79.08	253.93	158.45	46.10	12.07						

UNBUNDLED NETWORK ELEMENTS - Mississippi														Attachment: 2		Exhibit: A	
CATEGORY		RATE ELEMENTS	Interim	Zone	BCS	USOC	RATES ($)					Svc Order Submitted Elec per LSR	Svc Order Submitted Manually per LSR	Incremental Charge - Manual Svc Order vs. Electronic-1st	Incremental Charge - Manual Svc Order vs. Electronic-Add'l	Incremental Charge - Manual Svc Order vs. Electronic-Disc 1st	Incremental Charge - Manual Svc Order vs. Electronic-Disc Add'l
							Rec	Nonrecurring		Nonrecurring Disconnect		OSS Rates ($)					
								First	Add'l	First	Add'l	SOMEC	SOMAN	SOMAN	SOMAN	SOMAN	SOMAN
		Additional 4-Wire DS1 Digital Local Loop in Combination - Zone 2		2	UNC1X	USLXX	129.38	253.93	158.45	46.10	12.07						
		Additional 4-Wire DS1 Digital Local Loop in Combination - Zone 3		3	UNC1X	USLXX	206.74	253.93	158.45	46.10	12.07						
		Additional 4-Wire DS1 Digital Local Loop in Combination - Zone 4		4	UNC1X	USLXX	458.46	253.93	158.45	46.10	12.07						
		Nonrecurring Currently Combined Network Elements Switch -As-Is Charge			UNC1X	UNCCC		5.63	5.63	7.20	7.20						
	EXTENDED 4-WIRE 56 KBPS DIGITAL EXTENDED LOOP WITH DS0 INTEROFFICE TRANSPORT																
		First 4-wire 56 kbps Local Loop in combination - Zone 1		1	UNCDX	UDL56	27.44	126.53	88.85	60.68	14.64						
		First 4-wire 56 kbps Local Loop in combination - Zone 2		2	UNCDX	UDL56	34.55	126.53	88.85	60.68	14.64						
		First 4-wire 56 kbps Local Loop in combination - Zone 3		3	UNCDX	UDL56	40.76	126.53	88.85	60.68	14.64						
		First 4-wire 56 kbps Local Loop in combination - Zone 4		4	UNCDX	UDL56	32.25	126.53	88.85	60.68	14.64						
		First 4-wiree 56 kbps Interoffice Transport - Dedicated - Per Mile per month			UNCDX	1L5XX	0.0098										
		First 4-wire 56 kbps Interoffice Transport - Dedicated - Facility Termination per month			UNCDX	U1TD5	22.52	40.78	27.57	17.26	7.11						
		Nonrecurring Currently Combined Network Elements Switch -As-Is Charge			UNCDX	UNCCC		5.63	5.63	7.20	7.20						
	EXTENDED 4-WIRE 64 KBPS DIGITAL EXTENDED LOOP WITH DS0 INTEROFFICE TRANSPORT																
		First 4-wire 64 kbps Local Loop in combination - Zone 1		1	UNCDX	UDL64	27.44	126.53	88.85	60.68	14.64						
		First 4-wire 64 kbps Local Loop in combination - Zone 2		2	UNCDX	UDL64	34.55	126.53	88.85	60.68	14.64						
		First 4-wire 64 kbps Local Loop in combination - Zone 3		3	UNCDX	UDL64	40.76	126.53	88.85	60.68	14.64						
		First 4-wire 64 kbps Local Loop in combination - Zone 4		4	UNCDX	UDL64	32.25	126.53	88.85	60.68	14.64						
		First I4-wire 65 kbps Interoffice Transport - Dedicated - Per Mile per month			UNCDX	1L5XX	0.0098										
		First 4-wire 64 kbps Interoffice Transport - Dedicated - Facility Termination per month			UNCDX	U1TD6	22.52	40.78	27.57	17.26	7.11						
		Nonrecurring Currently Combined Network Elements Switch -As-Is Charge			UNCDX	UNCCC		5.63	5.63	7.20	7.20						
ADDITIONAL NETWORK ELEMENTS																	
	When used as a part of a currently combined facility, the non-recurrng charges do not apply, but a Switch As Is charge does apply.																
	When used as ordinarily combined network elements in All States, the non-recurring charges apply and the Switch As Is Charge does not.																
	Nonrecurring Currently Combined Network Elements "Switch As Is" Charge (One applies to each combination)																
		Nonrecurring Currently Combined Network Elements Switch -As-Is Charge - 2 wire/4-Wire VG			UNCVX	UNCCC		5.63	5.63	7.20	7.20						
		Nonrecurring Currently Combined Network Elements Switch -As-Is Charge - 56/64 kbps			UNCDX	UNCCC		5.63	5.63	7.20	7.20						
		Nonrecurring Currently Combined Network Elements Switch -As-Is Charge - DS1			UNC1X	UNCCC		5.63	5.63	7.20	7.20						
		Nonrecurring Currently Combined Network Elements Switch -As-Is Charge - DS3			UNC3X	UNCCC		5.63	5.63	7.20	7.20						
		Nonrecurring Currently Combined Network Elements Switch -As-Is Charge - STS1			UNCSX	UNCCC		5.63	5.63	7.20	7.20						
	Optional Features & Functions:																
		Clear Channel Capability Extended Frame Option - per DS1	I		U1TD1, ULDD1,UNC1X	CCOEF		0I	0I	0I	0I						
		Clear Channel Capability Super FrameOption - per DS1	I		U1TD1, ULDD1,UNC1X	CCOSF		0I	0I	0I	0I						
		Clear Channel Capability (SF/ESF) Option - Subsequent Activity - per DS1	I		ULDD1, U1TD1, UNC1X, USL	NRCCC		184.6S	23.78S	1.96S	0.76S						
		C-bit Parity Option - Subsequent Activity - per DS3	i		U1TD3, ULDD3, UE3, UNC3X	NRCC3		218.72S	7.66S	.7201S	0S						
	MULTIPLEXERS																
		DS1 to DS0 Channel System per month			UNC1X	MQ1	102.85	91.57	62.94	10.87	10.10						
		OCU-DP COCI (data) - DS1 to DS0 Channel System - per month (2.4-64kbs) used for a Local Loop			UDL	1D1DD	1.22	6.62	4.74								

UNBUNDLED NETWORK ELEMENTS - Mississippi														Attachment: 2		Exhibit: A	
CATEGORY		RATE ELEMENTS	Interim	Zone	BCS	USOC	RATES ($)					Svc Order Submitted Elec per LSR	Svc Order Submitted Manually per LSR	Incremental Charge - Manual Svc Order vs. Electronic-1st	Incremental Charge - Manual Svc Order vs. Electronic-Add'l	Incremental Charge - Manual Svc Order vs. Electronic-Disc 1st	Incremental Charge - Manual Svc Order vs. Electronic-Disc Add'l
							Rec	Nonrecurring		Nonrecurring Disconnect		OSS Rates ($)					
								First	Add'l	First	Add'l	SOMEC	SOMAN	SOMAN	SOMAN	SOMAN	SOMAN
		OCU-DP COCI (data) - DS1 to DS0 Channel System - per month (2.4-64kbs) used for connection to a channelized DS1 Local Channel in the same SWC as collocation			U1TUD	1D1DD	1.22	6.62	4.74								
		2-wire ISDN COCI (BRITE) - DS1 to DS0 Channel Systsem - per month for a Local Loop			UDN	UC1CA	2.62	6.62	4.74								
		2-wire ISDN COCI (BRITE) - DS1 to DS0 Channel Systsem - per month used for connection to a channelized DS1 Local Channel in the same SWC as collocation			U1TUB	UC1CA	2.62	6.62	4.74								
		Voice Grade COCI - DS1 to DS0 Channel System - per month used for a Local Loop			UEA	1D1VG	0.5737	6.62	4.74								
		Voice Grade COCI - DS1 to DS0 Channel System - per month used for connection to a channelized DS1 Local Channel in the same SWC as collocation			U1TUC	1D1VG	0.5737	6.62	4.74								
		DS3 to DS1 Channel System per month			UNC3X	MQ3	170.63	179.17	94.52	34.30	32.82						
		STS-1 to DS1 Channel System per month			UNCSX	MQ3	170.63	179.17	94.52	34.30	32.82						
		DS1 COCI used with Loop per month			USL	UC1D1	12.96	6.62	4.74								
		DS1 COCI (used for connection to a channelized DS1 Local Channel in the same SWC as collocation) per month			U1TUA	UC1D1	12.96	6.62	4.74								
		DS1 COCI used with Interoffice Channel per month			U1TD1	UC1D1	12.96	6.62	4.74								
		DS3 Interface Unit (DS1 COCI) used with Local Channel per month			ULDD1	UC1D1	12.96	6.62	4.74								
UNBUNDLED LOCAL EXCHANGE SWITCHING(PORTS)																	
	Exchange Ports																
	NOTE: Although the Port Rate includes all available features in GA, KY, LA & TN, the desired features will need to be ordered using retail USOCs																
	2-WIRE VOICE GRADE LINE PORT RATES (RES)																
		Exchange Ports - 2-Wire Analog Line Port- Res.			UEPSR	UEPRL	1.41	2.39	2.29	1.42	1.33						
		Exchange Ports - 2-Wire Analog Line Port with Caller ID - Res.			UEPSR	UEPRC	1.41	2.39	2.29	1.42	1.33						
		Exchange Ports - 2-Wire Analog Line Port outgoing only - Res.			UEPSR	UEPRO	1.41	2.39	2.29	1.42	1.33						
		Exchange Ports - 2-Wire VG unbundled MS extended local dialing parity Port with Caller ID - Res.			UEPSR	UEPAT	1.41	2.39	2.29	1.42	1.33						
		Exchange Ports - 2-Wire VG unbundled res, low usage line port with Caller ID (LUM)			UEPSR	UEPAP	1.41	2.39	2.29	1.42	1.33						
		Exchange Ports - 2-Wire Voice Mississippi Residence Dialing Plan without Caller ID			UEPSR	UEPWJ	1.41	2.39	2.29	1.42	1.33						
		2-Wire voice unbundled Low Usage Line Port without Caller ID Capability			UEPSR	UEPRT	1.41	2.39	2.29	1.42	1.33						
		Subsequent Activity			UEPSR	USASC	0.00	0.00	0.00								
	FEATURES																
		All Available Vertical Features			UEPSR	UEPVF	2.56	0.00	0.00								
	2-WIRE VOICE GRADE LINE PORT RATES (BUS)																
		Exchange Ports - 2-Wire Analog Line Port without Caller ID - Bus			UEPSB	UEPBL	1.41	2.39	2.29	1.42	1.33						
		Exchange Ports - 2-Wire VG unbundled Line Port with unbundled port with Caller+E484 ID - Bus.			UEPSB	UEPBC	1.41	2.39	2.29	1.42	1.33						
		Exchange Ports - 2-Wire Analog Line Port outgoing only - Bus.			UEPSB	UEPBO	1.41	2.39	2.29	1.42	1.33						
		Exchange Ports - 2-Wire VG unbundled MS extended local dialing parity Port with Caller ID - Bus.			UEPSB	UEPAY	1.41	2.39	2.29	1.42	1.33						
		Exhange Ports - 2-Wire VG unbundled incoming only port with Caller ID - Bus			UEPSB	UEPB1	1.41	2.39	2.29	1.42	1.33						
		Exchange Ports - 2-Wire Voice Mississippi Business Dialing Plan without Caller ID			UEPSB	UEPWK	1.41	2.39	2.29	1.42	1.33						
		2-Wire voice unbundled Incoming Only Port without Caller ID Capability			UEPSB	UEPBE	1.41	2.39	2.29	1.42	1.33						
		Subsequent Activity			UEPSB	USASC	0.00	0.00	0.00								
	FEATURES																
		All Available Vertical Features			UEPSB	UEPVF	2.56	0.00	0.00								

UNBUNDLED NETWORK ELEMENTS - Mississippi														Attachment: 2		Exhibit: A	
CATEGORY	RATE ELEMENTS	Interim	Zone	BCS	USOC	RATES ($)					Svc Order Submitted Elec per LSR	Svc Order Submitted Manually per LSR	Incremental Charge - Manual Svc Order vs. Electronic-1st	Incremental Charge - Manual Svc Order vs. Electronic-Add'l	Incremental Charge - Manual Svc Order vs. Electronic-Disc 1st	Incremental Charge - Manual Svc Order vs. Electronic-Disc Add'l
						Rec	Nonrecurring		Nonrecurring Disconnect		OSS Rates ($)					
							First	Add'l	First	Add'l	SOMEC	SOMAN	SOMAN	SOMAN	SOMAN	SOMAN
	EXCHANGE PORT RATES (DID & PBX)															
	2-Wire VG Unbundled 2-Way PBX Trunk - Res			UEPSE	UEPRD	1.41	31.45	14.93	14.38	0.92						
	2-Wire VG Line Side Unbundled 2-Way PBX Trunk - Bus			UEPSP	UEPPC	1.41	31.45	14.93	14.38	0.92						
	2-Wire VG Line Side Unbundled Outward PBX Trunk - Bus			UEPSP	UEPPO	1.41	31.45	14.93	14.38	0.92						
	2-Wire VG Line Side Unbundled Incoming PBX Trunk - Bus			UEPSP	UEPP1	1.41	31.45	14.93	14.38	0.92						
	2-Wire Analog Long Distance Terminal PBX Trunk - Bus			UEPSP	UEPLD	1.41	31.45	14.93	14.38	0.92						
	2-Wire Voice Unbundled PBX LD Terminal Ports			UEPSP	UEPLD	1.41	31.45	14.93	14.38	0.92						
	2-Wire Vice Unbundled 2-Way PBX Usage Port			UEPSP	UEPXA	1.41	31.45	14.93	14.38	0.92						
	2-Wire Voice Unbundled PBX Toll Terminal Hotel Ports			UEPSP	UEPXB	1.41	31.45	14.93	14.38	0.92						
	2-Wire Voice Unbundled PBX LD DDD Terminals Port			UEPSP	UEPXC	1.41	31.45	14.93	14.38	0.92						
	2-Wire Voice Unbundled PBX LD Terminal Switchboard Port			UEPSP	UEPXD	1.41	31.45	14.93	14.38	0.92						
	2-Wire Voice Unbundled PBX LD Terminal Switchboard IDD Capable Port			UEPSP	UEPXE	1.41	31.45	14.93	14.38	0.92						
	2-Wire Voice Unbundled 2-Way PBX Hotel/Hospital Economy Administrative Calling Port			UEPSP	UEPXL	1.41	31.45	14.93	14.38	0.92						
	2-Wire Voice Unbundled 2-Way PBX Hotel/Hospital Economy Room Calling Port			UEPSP	UEPXM	1.41	31.45	14.93	14.38	0.92						
	2-Wire Voice Unbundled 1-Way Outgoing PBX Hotel/Hospital Discount Room Calling Port			UEPSP	UEPXO	1.41	31.45	14.93	14.38	0.92						
	2-Wire Voice Unbundled 2-Way PBX Mississippi Local Economy Calling Port			UEPSP	UEPXQ	1.41	31.45	14.93	14.38	0.92						
	2-Wire Voice Unbundled 2-Way PBX Mississippi Local Optional Calling Port			UEPSP	UEPXR	1.41	31.45	14.93	14.38	0.92						
	2-Wire Voice Unbundled PBX Port, Mississippi only			UEPSP	UEPA5	1.41	31.45	14.93	14.38	0.92						
	2-Wire Voice Unbundled 1-Way Outgoing PBX Measured Port			UEPSP	UEPXS	1.41	31.45	14.93	14.38	0.92						
	Subsequent Activity			UEPSP	USASC	0.00	0.00	0.00								
	FEATURES															
	All Available Vertical Features			UEPSP UEPSE	UEPVF	2.56	0.00	0.00								
	EXCHANGE PORT RATES (COIN)															
	Exchange Ports - Coin Port					1.41	2.39	2.29	1.42	1.33						
	NOTE: Transmission/usage charges associated with POTS circuit switched usage will also apply to circuit switched voice and/or circuit switched data transmission by B-Channels associated with 2-wire ISDN ports.															
	NOTE: Access to B Channel or D Channel Packet capabilities will be available only through BFR/New Business Request Process. Rates for the packet capabilities will be determined via the Bona Fide Request/New Business Request Process.															
UNBUNDLED LOCAL EXCHANGE SWITCHING(PORTS)																
	EXCHANGE PORT RATES															
	The DS1 Port rates below for 4-Wire DDITS Trunk Port and 4-Wire ISDN Port in this rate exhibit apply to the embedded base in place as of 10/2/03 until 4/1/04. After 4/1/04 these rates shall revert to tariff rates or a separate agreement.															
	Requests for 4-Wire DDITS Trunk Ports with 4-Wire ISDN DS1 Ports after the effective date of this amendment shall be provided pursuant to a separate agreement or tariff at BellSouth's discretion.															
	Exchange Ports - 2-Wire DID Port			UEPEX	UEPP2	8.25	120.00	18.85	61.77	3.88						
	Exchange Ports - DDITS Port - 4-Wire DS1 Port with DID capability (E:4/1/2004)			UEPDD	UEPDD	58.41	203.19	96.25	74.86	2.54						
	Exchange Ports - 2-Wire ISDN Port (See Notes below.)			UEPTX, UEPSX	U1PMA	13.69	73.19	53.30	47.90	10.76						
	All Features Offered			UEPTX, UEPSX	UEPVF	2.56	0.00	0.00								
	Exchange Ports - 2-Wire ISDN Port -- Channel Profiles			UEPTX, UEPSX	U1UMA	0.00	0.00	0.00								
	NOTE: Transmission/usage charges associated with POTS circuit switched usage will also apply to circuit switched voice and/or circuit switched data transmission by B-Channels associated with 2-wire ISDN ports.															
	NOTE: Access to B Channel or D Channel Packet capabilities will be available only through BFR/New Business Request Process. Rates for the packet capabilities will be determined via the Bona Fide Request/New Business Request Process.															
	EXCHANGE PORT RATES (continued)															
	Exchange Ports - 4-Wire ISDN DS1 Port with Detailed E911 Locator Capability (E:4/1/2004)			UEPEX	UEPEX	84.63	205.00	102.14	81.65	20.69						
	Exchange Ports - 4-Wire ISDN DS1 Port (E:4/1/2004)			UEPDX	UEPDX	84.63	205.00	102.14	81.65	20.69						
	Physical Collocation - DS1 Cross-Connects			UEPEX UEPDX	PE1P1	1.14	22.16	16.02	6.60	5.97						
	Virtual Collocation - Special Access & UNE, cross-connect per DS1			UEPEX UEPDX	CNC1X	1.14	22.16	16.02	6.60	5.97						
	Detailed E911 with Locator Capability (required with UEPEX port)															
	Unbundled Exchange Ports, 4-Wire ISDN DS1 Port - E911 Locator Capability - Initial Profile Establishment per CLEC per State			UEPEX	UEP1A	0.00	1,814.00		156.15							
	Unbundled Exchange Ports, 4-Wire ISDN DS1 Port - E911 Locator Capability - Subsequent Profile Changes, Additions, Deletions			UEPEX	UEP1B	0.00	176.15									
	New or Additional PRI Telephone Numbers															

UNBUNDLED NETWORK ELEMENTS - Mississippi														Attachment: 2		Exhibit: A	
CATEGORY	RATE ELEMENTS	Interim	Zone	BCS	USOC	RATES ($)					Svc Order Submitted Elec per LSR	Svc Order Submitted Manually per LSR	Incremental Charge - Manual Svc Order vs. Electronic-1st	Incremental Charge - Manual Svc Order vs. Electronic-Add'l	Incremental Charge - Manual Svc Order vs. Electronic-Disc 1st	Incremental Charge - Manual Svc Order vs. Electronic-Disc Add'l
						Rec	Nonrecurring		Nonrecurring Disconnect		OSS Rates ($)					
							First	Add'l	First	Add'l	SOMEC	SOMAN	SOMAN	SOMAN	SOMAN	SOMAN
	Unbundled Exchange Ports, 4-Wire ISDN DS1 Port - E911 Locator Capability 2-way Telephone Numbers, per number in E911 profile [New or Additional]			UEPEX	UEP1C	0.0701	0.49									
	Unbundled Exchange Ports, 4-Wire ISDN DS1 Port - E911 Locator Capability - Outdial Telephone Numbers, per number in E911 profile [New or Additional]			UEPEX	UEP1D	0.0701	11.58	11.58								
	Unbundled Exchange Ports, 4-Wire ISDN DS1 Port - Inward Telephone Numbers - Inward Data Only Option [New or Additional]			UEPDX	UEP1E	0.00	0.49									
	Exchange Ports - 4-Wire ISDN DS1 Port - Subsequent [New] Inward Tel Numbers [Customer Testing Purposes]			UEPEX	PR7ZT	0.00	23.15	23.15								
LOCAL NUMBER PORTABILITY																
	Local Number Portability (1 per port)			UEPEX UEPDX	LNPCN	1.75										
INTERFACE (Provsioning Only)																
	Voice/Data			UEPEX	PR71V	0.00	0.00	0.00								
	Digital Data			UEPEX	PR71D	0.00	0.00	0.00								
	Inward Data			UEPDX	PR71E	0.00	0.00	0.00								
New or Additional Channel																
	New or Additional - Voice/Data "B" Channel			UEPEX	PR7BV	0.00	14.61									
	New or Additional - Digital Data "B" Channel			UEPEX	PR7BF	0.00	14.61									
	New or Additional Inward Data "B" Channel			UEPDX	PR7BD	0.00	14.61									
	New or Additional Useage Sensitive Voice Data "B" Channel			UEPEX	PR7BS	0.00	14.61									
	New or Additional Useage Sensitive Digital Data "B" Channel			UEPEX	PR7BU	0.00	14.61									
	New or Additional PRI "D" Channel			UEPEX	PR7EX	0.00	14.61									
CALL TYPES																
	Inward			UEPEX UEPDX	PR7C1	0.00	0.00	0.00								
	Outward			UEPEX	PR7CO	0.00	0.00	0.00								
	Two-way			UEPEX	PR7CC	0.00	0.00	0.00								
UNBUNDLED PORT with REMOTE CALL FORWARDING CAPABILITY																
UNBUNDLED REMOTE CALL FORWARDING SERVICE - RESIDENCE																
	Unbundled Remote Call Forwarding Service, Area Calling, Res			UEPVR	UERAC	1.41	2.39	2.29	1.42	1.33						
	Unbundled Remote Call Forwarding Service, Local Calling - Res			UEPVR	UERLC	1.41	2.39	2.29	1.42	1.33						
	Unbundled Remote Call Forwarding Service, InterLATA - Res			UEPVR	UERTE	1.41	2.39	2.29	1.42	1.33						
	Unbundled Remote Call Forwarding Service, IntraLATA - Res			UEPVR	UERTR	1.41	2.39	2.29	1.42	1.33						
Non-Recurring																
	Unbundled Remote Call Forwarding Service - Conversion - Switch-as-is			UEPVR	USAC2		0.0988	0.0988								
	Unbundled Remote Call Forwarding Service - Conversion with allowed change (PIC and LPIC)			UEPVR	USACC		0.0988	0.0988								
UNBUNDLED REMOTE CALL FORWARDING - Bus																
	Unbundled Remote Call Forwarding Service, Area Calling - Bus			UEPVB	UERAC	1.41	2.39	2.29	1.42	1.33						
	Unbundled Remote Call Forwarding Service, Local Calling - Bus			UEPVB	UERLC	1.41	2.39	2.29	1.42	1.33						
	Unbundled Remote Call Forwarding Service, InterLATA - Bus			UEPVB	UERTE	1.41	2.39	2.29	1.42	1.33						
	Unbundled Remote Call Forwarding Service, IntraLATA - Bus			UEPVB	UERTR	1.41	2.39	2.29	1.42	1.33						
	Unbundled Remote Call Forwarding Service Expanded and Exception Local Calling			UEPVB	UERVJ	1.41	2.39	2.29	1.42	1.33						
Non-Recurring																
	Unbundled Remote Call Forwarding Service - Conversion - Switch-as-is			UEPVB	USAC2		0.0988	0.0988								
	Unbundled Remote Call Forwarding Service - Conversion with allowed change (PIC and LPIC)			UEPVB	USACC		0.0988	0.0988								
UNBUNDLED LOCAL SWITCHING, PORT USAGE																
End Office Switching (Port Usage)																
	End Office Switching Function, Per MOU					0.0010269										
	End Office Trunk Port - Shared, Per MOU					0.000161										
Tandem Switching (Port Usage) (Local or Access Tandem)																

UNBUNDLED NETWORK ELEMENTS - Mississippi														Attachment: 2		Exhibit: A	
CATEGORY		RATE ELEMENTS	Interim	Zone	BCS	USOC	RATES ($)					Svc Order Submitted Elec per LSR	Svc Order Submitted Manually per LSR	Incremental Charge - Manual Svc Order vs. Electronic-1st	Incremental Charge - Manual Svc Order vs. Electronic-Add'l	Incremental Charge - Manual Svc Order vs. Electronic-Disc 1st	Incremental Charge - Manual Svc Order vs. Electronic-Disc Add'l
							Rec	Nonrecurring		Nonrecurring Disconnect		OSS Rates ($)					
								First	Add'l	First	Add'l	SOMEC	SOMAN	SOMAN	SOMAN	SOMAN	SOMAN
		Tandem Switching Function Per MOU					0.0001723										
		Tandem Trunk Port - Shared, Per MOU					0.0001828										
		Tandem Switching Function Per MOU (Melded)					0.000063441										
		Tandem Trunk Port - Shared, Per MOU (Melded)					0.000067307										
		Melded Factor: 36.82% of the Tandem Rate															
	Common Transport																
		Common Transport - Per Mile, Per MOU					0.0000026										
		Common Transport - Facilities Termination Per MOU					0.0004541										
UNBUNDLED PORT/LOOP COMBINATIONS - COST BASED RATES																	
	Cost Based Rates are applied where BellSouth is required by FCC and/or State Commission rule to provide Unbundled Local Switching or Switch Ports.																
	Features shall apply to the Unbundled Port/Loop Combination - Cost Based Rate section in the same manner as they are applied to the Stand-Alone Unbundled Port section of this Rate Exhibit.																
	End Office and Tandem Switching Usage and Common Transport Usage rates in the Port section of this rate exhibit shall apply to all combinations of loop/port network elements except for UNE Coin Port/Loop Combinations.																
	The first and additional Port nonrecurring charges apply to Not Currently Combined Combos. For Currently Combined Combos the nonrecurring charges shall be those identified in the Nonrecurring - Currently Combined sections.																
	2-WIRE VOICE GRADE LOOP WITH 2-WIRE LINE PORT (RES)																
	UNE Port/Loop Combination Rates																
		2-Wire VG Loop/Port Combo - Zone 1		1			12.22										
		2-Wire VG Loop/Port Combo - Zone 2		2			17.13										
		2-Wire VG Loop/Port Combo - Zone 3		3			26.26										
		2-Wire VG Loop/Port Combo - Zone 4		4			44.91										
	UNE Loop Rates																
		2-Wire Voice Grade Loop (SL1) - Zone 1		1	UEPRX	UEPLX	10.98										
		2-Wire Voice Grade Loop (SL1) - Zone 2		2	UEPRX	UEPLX	15.91										
		2-Wire Voice Grade Loop (SL1) - Zone 3		3	UEPRX	UEPLX	25.04										
		2-Wire Voice Grade Loop (SL1) - Zone 4		4	UEPRX	UEPLX	43.68										
	2-Wire Voice Grade Line Port Rates (Res)																
		2-Wire voice unbundled port - residence			UEPRX	UEPRL	1.23	40.31	19.84	24.90	6.58						
		2-Wire voice unbundled port with Caller ID - res			UEPRX	UEPRC	1.23	40.31	19.84	24.90	6.58						
		2-Wire voice unbundled port outgoing only - res			UEPRX	UEPRO	1.23	40.31	19.84	24.90	6.58						
		2-Wire voice Grade unbundled Mississippi extended local dialing parity port with Caller ID - res			UEPRX	UEPAT	1.23	40.31	19.84	24.90	6.58						
		2-Wire voice unbundles res, low usage line port with Caller ID (LUM)			UEPRX	UEPAP	1.23	40.31	19.84	24.90	6.58						
		2-Wire Voice Unbundled Mississippi Residence Dialing Plan without Caller ID			UEPRX	UEPWJ	1.23	40.31	19.84	24.90	6.58						
		2-Wire voice unbundled Low Usage Line Port without Caller ID Capability			UEPRX	UEPRT	1.23	40.31	19.84	24.90	6.58						
	FEATURES																
		All Features Offered			UEPRX	UEPVF	2.56	0.00	0.00								
	LOCAL NUMBER PORTABILITY																
		Local Number Portability (1 per port)			UEPRX	LNPCX	0.35										
	NONRECURRING CHARGES (NRCs) - CURRENTLY COMBINED																
		2-Wire Voice Grade Loop / Line Port Combination - Conversion - Switch-as-is			UEPRX	USAC2		0.0988	0.0988								
		2-Wire Voice Grade Loop / Line Port Combination - Conversion - Switch with change			UEPRX	USACC		0.0988	0.0988								
		2-Wire Voice Grade Loop / Line Port Combination - Conversion - Subsequent Database Update						0.00	0.00								
	ADDITIONAL NRCs																
		2-Wire Voice Grade Loop/Line Port Combination - Subsequent Activity			UEPRX	USAS2	0.00	0.00	0.00								
		Unbundled Miscellaneous Rate Element, Tag Loop at End User Premise			UEPRX	URETL		8.33	0.83								
	OFF/ON PREMISES EXTENSION CHANNELS																
		2 Wire Analog Voice Grade Extension Loop – Non-Design		1	UEPRX	UEAEN	12.03	37.92	17.55	23.48	5.25						
		2 Wire Analog Voice Grade Extension Loop – Non-Design		2	UEPRX	UEAEN	16.87	37.92	17.55	23.48	5.25						
		2 Wire Analog Voice Grade Extension Loop – Non-Design		3	UEPRX	UEAEN	25.68	37.92	17.55	23.48	5.25						
		2 Wire Analog Voice Grade Extension Loop – Non-Design		4	UEPRX	UEAEN	43.85	37.92	17.55	23.48	5.25						
		2 Wire Analog Voice Grade Extension Loop – Design		1	UEPRX	UEAED	13.89	105.96	68.28	52.82	10.37						
		2 Wire Analog Voice Grade Extension Loop – Design		2	UEPRX	UEAED	18.75	105.96	68.28	52.82	10.37						

UNBUNDLED NETWORK ELEMENTS - Mississippi														Attachment: 2		Exhibit: A	
CATEGORY	RATE ELEMENTS	Interim	Zone	BCS	USOC	RATES ($)					Svc Order Submitted Elec per LSR	Svc Order Submitted Manually per LSR	Incremental Charge - Manual Svc Order vs. Electronic-1st	Incremental Charge - Manual Svc Order vs. Electronic-Add'l	Incremental Charge - Manual Svc Order vs. Electronic-Disc 1st	Incremental Charge - Manual Svc Order vs. Electronic-Disc Add'l
						Rec	Nonrecurring		Nonrecurring Disconnect		OSS Rates ($)					
							First	Add'l	First	Add'l	SOMEC	SOMAN	SOMAN	SOMAN	SOMAN	SOMAN
	2 Wire Analog Voice Grade Extension Loop – Design		3	UEPRX	UEAED	27.55	105.96	68.28	52.82	10.37						
	2 Wire Analog Voice Grade Extension Loop – Design		4	UEPRX	UEAED	45.72	105.96	68.28	52.82	10.37						
INTEROFFICE TRANSPORT																
	Interoffice Transport - Dedicated - 2 Wire Voice Grade - Facility Termination			UEPRX	U1TV2	20.32	40.77	27.57	17.26	7.11						
	Interoffice Transport - Dedicated - 2 Wire Voice Grade - Per Mile or Fraction Mile			UEPRX	U1TVM	0.0088	0.00	0.00								
2-WIRE VOICE GRADE LOOP WITH 2-WIRE LINE PORT (BUS)																
UNE Port/Loop Combination Rates																
	2-Wire VG Loop/Port Combo - Zone 1		1			12.22										
	2-Wire VG Loop/Port Combo - Zone 2		2			17.13										
	2-Wire VG Loop/Port Combo - Zone 3		3			26.26										
UNE Loop Rates																
	2-Wire Voice Grade Loop (SL1) - Zone 1		1	UEPBX	UEPLX	10.98										
	2-Wire Voice Grade Loop (SL1) - Zone 2		2	UEPBX	UEPLX	15.91										
	2-Wire Voice Grade Loop (SL1) - Zone 3		3	UEPBX	UEPLX	25.04										
	2-Wire Voice Grade Loop (SL1) - Zone 4		4	UEPBX	UEPLX	43.68										
2-Wire Voice Grade Line Port (Bus)																
	2-Wire voice unbundled port without Caller ID - bus			UEPBX	UEPBL	1.23	40.31	19.84	24.90	6.58						
	2-Wire voice unbundled port with Caller + E484 ID - bus			UEPBX	UEPBC	1.23	40.31	19.84	24.90	6.58						
	2-Wire voice unbundled port outgoing only - bus			UEPBX	UEPBO	1.23	40.31	19.84	24.90	6.58						
	2-Wire voice Grade unbundled Mississippi extended local dialing parity port with Caller ID - bus			UEPBX	UEPAY	1.23	40.31	19.84	24.90	6.58						
	2-Wire voice unbundled incoming only port with Caller ID - Bus			UEPBX	UEPB1	1.23	40.31	19.84	24.90	6.58						
	2-Wire Voice Unbundled Mississippi Business Dialing Plan without Caller ID			UEPBX	UEPWK	1.23	40.31	19.84	24.90	6.58						
	2-Wire voice unbundled Incoming Only Port without Caller ID Capability			UEPBX	UEPBE	1.23	40.31	19.84	24.90	6.58						
LOCAL NUMBER PORTABILITY																
	Local Number Portability (1 per port)			UEPBX	LNPCX	0.35										
FEATURES																
	All Features Offered			UEPBX	UEPVF	2.56	0.00	0.00								
NONRECURRING CHARGES (NRCs) - CURRENTLY COMBINED																
	2-Wire Voice Grade Loop / Line Port Combination - Conversion - Switch-as-is			UEPBX	USAC2		0.0988	0.0988								
	2-Wire Voice Grade Loop / Line Port Combination - Conversion - Switch with change			UEPBX	USACC		0.0988	0.0988								
	2-Wire Voice Grade Loop / Line Port Combination - Conversion - Subsequent Database Update						0.00	0.00								
ADDITIONAL NRCs																
	2-Wire Voice Grade Loop/Line Port Combination - Subsequent Activity			UEPBX	USAS2		0.00	0.00								
	Unbundled Miscellaneous Rate Element, Tag Loop at End User Premise			UEPBX	URETL		8.33	0.83								
OFF/ON PREMISES EXTENSION CHANNELS																
	2 Wire Analog Voice Grade Extension Loop – Non-Design		1	UEPBX	UEAEN	12.03	37.92	17.55	23.48	5.25						
	2 Wire Analog Voice Grade Extension Loop – Non-Design		2	UEPBX	UEAEN	16.87	37.92	17.55	23.48	5.25						
	2 Wire Analog Voice Grade Extension Loop – Non-Design		3	UEPBX	UEAEN	25.68	37.92	17.55	23.48	5.25						
	2 Wire Analog Voice Grade Extension Loop – Non-Design		4	UEPBX	UEAEN	43.85	37.92	17.55	23.48	5.25						
	2 Wire Analog Voice Grade Extension Loop – Design		1	UEPBX	UEAED	13.89	105.96	68.28	52.82	10.37						
	2 Wire Analog Voice Grade Extension Loop – Design		2	UEPBX	UEAED	18.75	105.96	68.28	52.82	10.37						
	2 Wire Analog Voice Grade Extension Loop – Design		3	UEPBX	UEAED	27.55	105.96	68.28	52.82	10.37						
	2 Wire Analog Voice Grade Extension Loop – Design		4	UEPBX	UEAED	45.72	105.96	68.28	52.82	10.37						
INTEROFFICE TRANSPORT																
	Interoffice Transport - Dedicated - 2 Wire Voice Grade - Facility Termination			UEPBX	U1TV2	20.32	40.77	27.57	17.26	7.11						
	Interoffice Transport - Dedicated - 2 Wire Voice Grade - Per Mile or Fraction Mile			UEPBX	U1TVM	0.0088	0.00	0.00								
2-WIRE VOICE GRADE LOOP WITH 2-WIRE LINE PORT (RES - PBX)																

UNBUNDLED NETWORK ELEMENTS - Mississippi														Attachment: 2		Exhibit: A	
CATEGORY	RATE ELEMENTS	Interim	Zone	BCS	USOC	RATES ($)					Svc Order Submitted Elec per LSR	Svc Order Submitted Manually per LSR	Incremental Charge - Manual Svc Order vs. Electronic-1st	Incremental Charge - Manual Svc Order vs. Electronic-Add'l	Incremental Charge - Manual Svc Order vs. Electronic-Disc 1st	Incremental Charge - Manual Svc Order vs. Electronic-Disc Add'l
						Rec	Nonrecurring		Nonrecurring Disconnect		OSS Rates ($)					
							First	Add'l	First	Add'l	SOMEC	SOMAN	SOMAN	SOMAN	SOMAN	SOMAN
UNE Port/Loop Combination Rates																
	2-Wire VG Loop/Port Combo - Zone 1		1			12.22										
	2-Wire VG Loop/Port Combo - Zone 2		2			17.13										
	2-Wire VG Loop/Port Combo - Zone 3		3			26.26										
	2-Wire VG Loop/Port Combo - Zone 4		4			44.91										
UNE Loop Rates																
	2-Wire Voice Grade Loop (SL 1) - Zone 1		1	UEPRG	UEPLX	10.98										
	2-Wire Voice Grade Loop (SL 1) - Zone 2		2	UEPRG	UEPLX	15.91										
	2-Wire Voice Grade Loop (SL 1) - Zone 3		3	UEPRG	UEPLX	25.04										
	2-Wire Voice Grade Loop (SL 1) - Zone 4		4	UEPRG	UEPLX	43.68										
2-Wire Voice Grade Line Port Rates (RES - PBX)																
	2-Wire VG Unbundled Combination 2-Way PBX Trunk Port - Res			UEPRG	UEPRD	1.23	69.37	32.48	37.86	6.17						
LOCAL NUMBER PORTABILITY																
	Local Number Portability (1 per port)			UEPRG	LNPCP	3.15	0.00	0.00								
FEATURES																
	All Features Offered			UEPRG	UEPVF	2.56	0.00	0.00								
NONRECURRING CHARGES (NRCs) - CURRENTLY COMBINED																
	2-Wire Voice Grade Loop/ Line Port Combination (PBX) - Conversion - Switch-As-Is			UEPRG	USAC2		7.96	1.91								
	2-Wire Voice Grade Loop/ Line Port Combination (PBX) - Conversion - Switch with Change			UEPRG	USACC		7.96	1.91								
	2-Wire Voice Grade Loop / Line Port Combination - Conversion - Subsequent Database Update						0.00	0.00								
ADDITIONAL NRCs																
	2-Wire Voice Grade Loop/ Line Port Combination (PBX) - Subsequent Activity			UEPRG	USAS2	0.00	0.00	0.00								
	PBX Subsequent Activity - Change/Rearrange Multiline Hunt Group						7.36	7.36								
	Unbundled Miscellaneous Rate Element, Tag Loop at End User Premise			UEPRG	URETL		8.33	0.83								
OFF/ON PREMISES EXTENSION CHANNELS																
	Local Channel Voice grade, per termination		1	UEPRG	P2JHX	13.89	105.96	68.28	52.82	10.37						
	Local Channel Voice grade, per termination		2	UEPRG	P2JHX	18.75	105.96	68.28	52.82	10.37						
	Local Channel Voice grade, per termination		3	UEPRG	P2JHX	27.55	105.96	68.28	52.82	10.37						
	Local Channel Voice grade, per termination		4	UEPRG	P2JHX	45.72	105.96	68.28	52.82	10.37						
INTEROFFICE TRANSPORT																
	Interoffice Transport - Dedicated - 2 Wire Voice Grade - Facility Termination			UEPRG	U1TV2	20.32	40.77	27.57	17.26	7.11						
	Interoffice Transport - Dedicated - 2 Wire Voice Grade - Per Mile or Fraction Mile			UEPRG	U1TVM	0.0088	0.00	0.00								
2-WIRE VOICE GRADE LOOP WITH 2-WIRE LINE PORT (BUS - PBX)																
UNE Port/Loop Combination Rates																
	2-Wire VG Loop/Port Combo - Zone 1		1			12.22										
	2-Wire VG Loop/Port Combo - Zone 2		2			17.13										
	2-Wire VG Loop/Port Combo - Zone 3		3			26.26										
	2-Wire VG Loop/Port Combo - Zone 4		4			44.91										
UNE Loop Rates																
	2-Wire Voice Grade Loop (SL 1) - Zone 1		1	UEPPX	UEPLX	10.98										
	2-Wire Voice Grade Loop (SL 1) - Zone 2		2	UEPPX	UEPLX	15.91										
	2-Wire Voice Grade Loop (SL 1) - Zone 3		3	UEPPX	UEPLX	25.04										
	2-Wire Voice Grade Loop (SL 1) - Zone 4		4	UEPPX	UEPLX	43.68										
2-Wire Voice Grade Line Port Rates (BUS - PBX)																
	Line Side Unbundled Combination 2-Way PBX Trunk Port - Bus			UEPPX	UEPPC	1.23	69.37	32.48	37.86	6.17						
	Line Side Unbundled Outward PBX Trunk Port - Bus			UEPPX	UEPPO	1.23	69.37	32.48	37.86	6.17						
	Line Side Unbundled Incoming PBX Trunk Port - Bus			UEPPX	UEPP1	1.23	69.37	32.48	37.86	6.17						
	2-Wire Voice Unbundled PBX LD Terminal Ports			UEPPX	UEPLD	1.23	69.37	32.48	37.86	6.17						
	2-Wire Voice Unbundled 2-Way Combination PBX Usage Port			UEPPX	UEPXA	1.23	69.37	32.48	37.86	6.17						

UNBUNDLED NETWORK ELEMENTS - Mississippi														Attachment: 2		Exhibit: A	
CATEGORY	RATE ELEMENTS	Interim	Zone	BCS	USOC	RATES ($)					Svc Order Submitted Elec per LSR	Svc Order Submitted Manually per LSR	Incremental Charge - Manual Svc Order vs. Electronic-1st	Incremental Charge - Manual Svc Order vs. Electronic-Add'l	Incremental Charge - Manual Svc Order vs. Electronic-Disc 1st	Incremental Charge - Manual Svc Order vs. Electronic-Disc Add'l
						Rec	Nonrecurring		Nonrecurring Disconnect		OSS Rates ($)					
							First	Add'l	First	Add'l	SOMEC	SOMAN	SOMAN	SOMAN	SOMAN	SOMAN
	2-Wire Voice Unbundled PBX Toll Terminal Hotel Ports			UEPPX	UEPXB	1.23	69.37	32.48	37.86	6.17						
	2-Wire Voice Unbundled PBX LD DDD Terminals Port			UEPPX	UEPXC	1.23	69.37	32.48	37.86	6.17						
	2-Wire Voice Unbundled PBX LD Terminal Switchboard Port			UEPPX	UEPXD	1.23	69.37	32.48	37.86	6.17						
	2-Wire Voice Unbundled PBX LD Terminal Switchboard IDD Capable Port			UEPPX	UEPXE	1.23	69.37	32.48	37.86	6.17						
	2-Wire Voice Unbundled 2-Way PBX Hotel/Hospital Economy Administrative Calling Port			UEPPX	UEPXL	1.23	69.37	32.48	37.86	6.17						
	2-Wire Voice Unbundled 2-Way PBX Hotel/Hospital Economy Room Calling Port			UEPPX	UEPXM	1.23	69.37	32.48	37.86	6.17						
	2-Wire Voice Unbundled 1-Way Outgoing PBX Hotel/Hospital Discount Room Calling Port			UEPPX	UEPXO	1.23	69.37	32.48	37.86	6.17						
	2-Wire Voice Unbundled 2-Way PBX Mississippi Local Economy Calling Port			UEPPX	UEPXQ	1.23	69.37	32.48	37.86	6.17						
	2-Wire Voice Unbundled 2-Way PBX Mississippi Local Optional Calling Port			UEPPX	UEPXR	1.23	69.37	32.48	37.86	6.17						
	2-Wire Voice Unbundled 1-Way Outgoing PBX Measured Port			UEPPX	UEPXS	1.23	69.37	32.48	37.86	6.17						
	Mississippi PBX 2-Way Combo Local Opt 2 Calling Port			UEPPX	UEPA5	1.23	69.37	32.48	37.86	6.17						
LOCAL NUMBER PORTABILITY																
	Local Number Portability (1 per port)			UEPPX	LNPCP	3.15	0.00	0.00								
FEATURES																
	All Features Offered			UEPPX	UEPVF	2.56	0.00	0.00								
NONRECURRING CHARGES (NRCs) - CURRENTLY COMBINED																
	2-Wire Voice Grade Loop/ Line Port Combination (PBX) - Conversion - Switch-As-Is			UEPPX	USAC2		7.96	1.91								
	2-Wire Voice Grade Loop/ Line Port Combination (PBX) - Conversion - Switch with Change			UEPPX	USACC		7.96	1.91								
	2-Wire Voice Grade Loop / Line Port Combination - Conversion - Subsequent Database Update						0.00	0.00								
ADDITIONAL NRCs																
	2-Wire Voice Grade Loop/ Line Port Combination (PBX) - Subsequent Activity			UEPPX	USAS2	0.00	0.00	0.00								
	PBX Subsequent Activity - Change/Rearrange Multiline Hunt Group						7.36	7.36								
	Unbundled Miscellaneous Rate Element, Tag Loop at End User Premise			UEPPX	URETL		8.33	0.83								
OFF/ON PREMISES EXTENSION CHANNELS																
	Local Channel Voice grade, per termination		1	UEPPX	P2JHX	13.89	105.96	68.28	52.82	10.37						
	Local Channel Voice grade, per termination		2	UEPPX	P2JHX	18.75	105.96	68.28	52.82	10.37						
	Local Channel Voice grade, per termination		3	UEPPX	P2JHX	27.55	105.96	68.28	52.82	10.37						
	Local Channel Voice grade, per termination		4	UEPPX	P2JHX	45.72	105.96	68.28	52.82	10.37						
INTEROFFICE TRANSPORT																
	Interoffice Transport - Dedicated - 2 Wire Voice Grade - Facility Termination			UEPPX	U1TV2	20.32	40.77	27.57	17.26	7.11						
	Interoffice Transport - Dedicated - 2 Wire Voice Grade - Per Mile or Fraction Mile			UEPPX	U1TVM	0.0088	0.00	0.00								
2-WIRE VOICE GRADE LOOP WITH 2-WIRE ANALOG LINE COIN PORT																
UNE Port/Loop Combination Rates																
	2-Wire VG Coin Port/Loop Combo – Zone 1		1			12.22										
	2-Wire VG Coin Port/Loop Combo – Zone 2		2			17.13										
	2-Wire VG Coin Port/Loop Combo – Zone 3		3			26.26										
	2-Wire VG Coin Port/Loop Combo – Zone 4		4			44.91										
UNE Loop Rates																
	2-Wire Voice Grade Loop (SL1) - Zone 1		1	UEPCO	UEPLX	10.98										
	2-Wire Voice Grade Loop (SL1) - Zone 2		2	UEPCO	UEPLX	15.91										
	2-Wire Voice Grade Loop (SL1) - Zone 3		3	UEPCO	UEPLX	25.04										
	2-Wire Voice Grade Loop (SL1) - Zone 4		4	UEPCO	UEPLX	43.68										
2-Wire Voice Grade Line Ports (COIN)																
	2-Wire Coin 2-Way without Operator Screening and without Blocking (AL, KY, LA, MS)			UEPCO	UEPRF	1.23	40.31	19.84	24.90	6.58						

UNBUNDLED NETWORK ELEMENTS - Mississippi														Attachment: 2		Exhibit: A	
CATEGORY		RATE ELEMENTS	Interim	Zone	BCS	USOC	RATES ($)					Svc Order Submitted Elec per LSR	Svc Order Submitted Manually per LSR	Incremental Charge - Manual Svc Order vs. Electronic-1st	Incremental Charge - Manual Svc Order vs. Electronic-Add'l	Incremental Charge - Manual Svc Order vs. Electronic-Disc 1st	Incremental Charge - Manual Svc Order vs. Electronic-Disc Add'l
							Rec	Nonrecurring		Nonrecurring Disconnect		OSS Rates ($)					
								First	Add'l	First	Add'l	SOMEC	SOMAN	SOMAN	SOMAN	SOMAN	SOMAN
		2-Wire Coin 2-Way without Operator Screening and without Blocking; with Dialing Parity (Note 3) (MS)			UEPCO	UEPMC	1.23	40.31	19.84	24.90	6.58						
		2-Wire Coin 2-Way with Operator Screening and Blocking: 011, 900/976, 1+DDD (AL, KY, LA, MS)			UEPCO	UEPRA	1.23	40.31	19.84	24.90	6.58						
		2-Wire Coin 2-W with Operator Screening and Blocking: 011, 900/976, 1+DDD; with Dialing Parity (MS)			UEPCO	UEPMA	1.23	40.31	19.84	24.90	6.58						
		2-Wire Coin 2-Way with Operator Screening and 011 Blocking (AL, LA, MS)			UEPCO	UEPRB	1.23	40.31	19.84	24.90	6.58						
		2-Wire Coin 2-Way with Operator Screening and 011 Blocking; with Dialing Parity (MS)			UEPCO	UEPMB	1.23	40.31	19.84	24.90	6.58						
		2-Wire Coin 2-Way with Operator Screening & Blocking: 900/976, 1+DDD, 011+, & Local (AL, KY, LA, MS)			UEPCO	UEPCD	1.23	40.31	19.84	24.90	6.58						
		2-Wire Coin 2-W Operator Screening: 900 Block: 900/976, 1+DDD, 011+, Local; with Dialing Parity (MS)			UEPCO	UEPCJ	1.23	40.31	19.84	24.90	6.58						
		2-Wire Coin Outward without Blocking and without Operator Screening (KY, LA, MS)			UEPCO	UEPRN	1.23	40.31	19.84	24.90	6.58						
		2-Wire Coin Outward without Blocking and without Operator Screening; With Dailing Parity (MS)			UEPCO	UEPME	1.23	40.31	19.84	24.90	6.58						
		2-Wire Coin Outward with Operator Screening and 011 Blocking (GA, KY, MS)			UEPCO	UEPRJ	1.23	40.31	19.84	24.90	6.58						
		2-Wire Coin Outward with Operator Screening and 011 Blocking; with Dialing Parity (MS)			UEPCO	UEPMD	1.23	40.31	19.84	24.90	6.58						
		2-Wire Coin Outward with Operator Screening and Blocking: 011, 900/976, 1+DDD (AL, KY, LA, MS)			UEPCO	UEPRH	1.23	40.31	19.84	24.90	6.58						
		2-Wire Coin Outward Operator Screening & Blocking: 900/976, 1+DDD, 011+, and Local (AL, KY, LA, MS)			UEPCO	UEPCN	1.23	40.31	19.84	24.90	6.58						
		2-Wire Coin Out Operator Screen & Block: 900/976, 1+DDD, 011+, and Local; with Dialing Parity (MS)			UEPCO	UEPCS	1.23	40.31	19.84	24.90	6.58						
		2-Wire 2-Way Smartline with 900/976 (all states except LA)			UEPCO	UEPCK	1.23	40.31	19.84	24.90	6.58						
		2-Wire Coin Outward Smartline with 900/976 (all states except LA)			UEPCO	UEPCR	1.23	40.31	19.84	24.90	6.58						
	ADDITIONAL UNE COIN PORT/LOOP (RC)																
		UNE Coin Port/Loop Combo Usage (Flat Rate)			UEPCO	URECU	4.62	0.00	0.00	0.00	0.00						
	LOCAL NUMBER PORTABILITY																
		Local Number Portability (1 per port)			UEPCO	LNPCX	0.35										
	NONRECURRING CHARGES - CURRENTLY COMBINED																
		2-Wire Voice Grade Loop / Line Port Combination - Conversion - Switch-as-is			UEPCO	USAC2		0.0988	0.0988								
		2-Wire Voice Grade Loop / Line Port Combination - Conversion - Switch with change			UEPCO	USACC		0.0988	0.0988								
	ADDITIONAL NRCs																
		2-Wire Voice Grade Loop/Line Port Combination - Subsequent Activity			UEPCO	USAS2		0.00	0.00								
		Unbundled Miscellaneous Rate Element, Tag Loop at End User Premise			UEPCO	URETL		8.33	0.83								
	2-WIRE VOICE LOOP/ 2WIRE VOICE GRADE IO TRANSPORT/ 2-WIRE LINE PORT (RES)																
	UNE Port/Loop Combination Rates																
		2-Wire VG Loop/IO Tranport/Port Combo - Zone 1		1			15.16										
		2-Wire VG Loop/IO Tranport/Port Combo - Zone 2		2			20.02										
		2-Wire VG Loop/IO Tranport/Port Combo - Zone 3		3			28.82										
		2-Wire VG Loop/IO Tranport/Port Combo - Zone 4		4			46.99										
	UNE Loop Rates																
		2-Wire Voice Grade Loop (SL2) - Zone 1		1	UEPFR	UECF2	13.89										
		2-Wire Voice Grade Loop (SL2) - Zone 2		2	UEPFR	UECF2	18.75										
		2-Wire Voice Grade Loop (SL2) - Zone 3		3	UEPFR	UECF2	27.55										
		2-Wire Voice Grade Loop (SL2) - Zone 4		4	UEPFR	UECF2	45.72										
	2-Wire Voice Grade Line Port Rates (Res)																
		2-Wire voice unbundled port - residence			UEPFR	UEPRL	1.27	108.35	70.57	54.24	11.70						
		2-Wire voice unbundled port with Caller ID - res			UEPFR	UEPRC	1.27	108.35	70.57	54.24	11.70						

UNBUNDLED NETWORK ELEMENTS - Mississippi														Attachment: 2		Exhibit: A	
CATEGORY	RATE ELEMENTS	Interim	Zone	BCS	USOC	RATES ($)					Svc Order Submitted Elec per LSR	Svc Order Submitted Manually per LSR	Incremental Charge - Manual Svc Order vs. Electronic-1st	Incremental Charge - Manual Svc Order vs. Electronic-Add'l	Incremental Charge - Manual Svc Order vs. Electronic-Disc 1st	Incremental Charge - Manual Svc Order vs. Electronic-Disc Add'l
						Rec	Nonrecurring		Nonrecurring Disconnect		OSS Rates ($)					
							First	Add'l	First	Add'l	SOMEC	SOMAN	SOMAN	SOMAN	SOMAN	SOMAN
	2-Wire voice unbundled port outgoing only - res			UEPFR	UEPRO	1.27	108.35	70.57	54.24	11.70						
	2-Wire voice Grade unbundled Mississippi extended local dialing parity port with Caller ID - res			UEPFR	UEPAT	1.27	108.35	70.57	54.24	11.70						
	2-Wire voice unbundles res, low usage line port with Caller ID (LUM)			UEPFR	UEPAP	1.27	108.35	70.57	54.24	11.70						
	2-Wire Voice Unbundled Mississippi Residence Dialing Plan without Caller ID			UEPFR	UEPWJ	1.27	108.35	70.57	54.24	11.70						
INTEROFFICE TRANSPORT																
	Interoffice Transport - Dedicated - 2 Wire Voice Grade - Facility Termination			UEPFR	U1TV2	20.32	40.77	27.57	17.26	7.11						
	Interoffice Transport - Dedicated - 2 Wire Voice Grade - Per Mile or Fraction Mile			UEPFR	1L5XX	0.0088										
FEATURES																
	All Features Offered			UEPFR	UEPVF	2.56	0.00	0.00								
LOCAL NUMBER PORTABILITY																
	Local Number Portability (1 per port)			UEPFR	LNPCX	0.35										
NONRECURRING CHARGES (NRCs) - CURRENTLY COMBINED																
	2-Wire Loop / Dedicated IO Transport / 2 Wire Line Port Combination - Conversion - Switch-as-is			UEPFR	USAC2		16.94	3.72								
	2-Wire Loop / Dedicated IO Transport / 2 Wire Line Port Combination - Conversion - Switch-With-Change			UEPFR	USACC		16.94	3.72								
	Unbundled Miscellaneous Rate Element, Tag Designed Loop at End User Premise			UEPFR	URETN		11.19	1.10								
2-WIRE VOICE LOOP/ 2WIRE VOICE GRADE IO TRANSPORT/ 2-WIRE LINE PORT (BUS)																
UNE Port/Loop Combination Rates																
	2-Wire VG Loop/IO Tranport/Port Combo - Zone 1		1			15.16										
	2-Wire VG Loop/IO Tranport/Port Combo - Zone 2		2			20.02										
	2-Wire VG Loop/IO Tranport/Port Combo - Zone 3		3			28.82										
	2-Wire VG Loop/IO Tranport/Port Combo - Zone 4		4			46.99										
UNE Loop Rates																
	2-Wire Voice Grade Loop (SL2) - Zone 1		1	UEPFB	UECF2	13.89										
	2-Wire Voice Grade Loop (SL2) - Zone 2		2	UEPFB	UECF2	18.75										
	2-Wire Voice Grade Loop (SL2) - Zone 3		3	UEPFB	UECF2	27.55										
	2-Wire Voice Grade Loop (SL2) - Zone 4		4	UEPFB	UECF2	45.72										
2-Wire Voice Grade Line Port (Bus)																
	2-Wire voice unbundled port without Caller ID - bus			UEPFB	UEPBL	1.27	108.35	70.57	54.24	11.70						
	2-Wire voice unbundled port with Caller + E484 ID - bus			UEPFB	UEPBC	1.27	108.35	70.57	54.24	11.70						
	2-Wire voice unbundled port outgoing only - bus			UEPFB	UEPBO	1.27	108.35	70.57	54.24	11.70						
	2-Wire voice Grade unbundled Mississippi extended local dialing parity port with Caller ID - bus			UEPFB	UEPAY	1.27	108.35	70.57	54.24	11.70						
	2-Wire voice unbundled incoming only port with Caller ID - Bus			UEPFB	UEPB1	1.27	108.35	70.57	54.24	11.70						
	2-Wire Voice Unbundled Mississippi Business Dialing Plan without Caller ID			UEPFB	UEPWK	1.27	108.35	70.57	54.24	11.70						
LOCAL NUMBER PORTABILITY																
	Local Number Portability (1 per port)			UEPFB	LNPCX	0.35										
INTEROFFICE TRANSPORT																
	Interoffice Transport - Dedicated - 2 Wire Voice Grade - Facility Termination			UEPFB	U1TV2	20.32	40.77	27.57	17.26	7.11						
	Interoffice Transport - Dedicated - 2 Wire Voice Grade - Per Mile or Fraction Mile			UEPFB	1L5XX	0.0088										
FEATURES																
	All Features Offered			UEPFB	UEPVF	2.56	0.00	0.00								
NONRECURRING CHARGES (NRCs) - CURRENTLY COMBINED																
	2-Wire Loop / Dedicated IO Transport / 2 Wire Line Port Combination - Conversion - Switch-as-is			UEPFB	USAC2		16.94	3.72								
	2-Wire Loop / Dedicated IO Transport / 2 Wire Line Port Combination - Conversion - Switch with change			UEPFB	USACC		16.94	3.72								
	Unbundled Miscellaneous Rate Element, Tag Designed Loop at End User Premise			UEPFB	URETN		11.19	1.10								

UNBUNDLED NETWORK ELEMENTS - Mississippi													Attachment: 2		Exhibit: A	
CATEGORY	RATE ELEMENTS	Interim	Zone	BCS	USOC	RATES ($)					Svc Order Submitted Elec per LSR	Svc Order Submitted Manually per LSR	Incremental Charge - Manual Svc Order vs. Electronic-1st	Incremental Charge - Manual Svc Order vs. Electronic-Add'l	Incremental Charge - Manual Svc Order vs. Electronic-Disc 1st	Incremental Charge - Manual Svc Order vs. Electronic-Disc Add'l
						Rec	Nonrecurring		Nonrecurring Disconnect		OSS Rates ($)					
							First	Add'l	First	Add'l	SOMEC	SOMAN	SOMAN	SOMAN	SOMAN	SOMAN
2-WIRE VOICE LOOP/ 2WIRE VOICE GRADE IO TRANSPORT/ 2-WIRE LINE PORT (PBX)																
UNE Port/Loop Combination Rates																
	2-Wire VG Loop/IO Tranport/Port Combo - Zone 1		1			15.16										
	2-Wire VG Loop/IO Tranport/Port Combo - Zone 2		2			20.02										
	2-Wire VG Loop/IO Tranport/Port Combo - Zone 3		3			28.82										
	2-Wire VG Loop/IO Tranport/Port Combo - Zone 4		4			46.99										
UNE Loop Rates																
	2-Wire Voice Grade Loop (SL2) - Zone 1		1	UEPFP	UECF2	13.89										
	2-Wire Voice Grade Loop (SL2) - Zone 2		2	UEPFP	UECF2	18.75										
	2-Wire Voice Grade Loop (SL2) - Zone 3		3	UEPFP	UECF2	27.55										
	2-Wire Voice Grade Loop (SL2) - Zone 4		4	UEPFP	UECF2	45.72										
2-Wire Voice Grade Line Port Rates (BUS - PBX)																
	Line Side Unbundled Combination 2-Way PBX Trunk Port - Bus			UEPFP	UEPPC	1.27	137.41	80.14	67.20	11.29						
	Line Side Unbundled Outward PBX Trunk Port - Bus			UEPFP	UEPPO	1.27	137.41	80.14	67.20	11.29						
	Line Side Unbundled Incoming PBX Trunk Port - Bus			UEPFP	UEPP1	1.27	137.41	80.14	67.20	11.29						
	2-Wire Voice Unbundled PBX LD Terminal Ports			UEPFP	UEPLD	1.27	137.41	80.14	67.20	11.29						
	2-Wire Voice Unbundled 2-Way Combination PBX Usage Port			UEPFP	UEPXA	1.27	137.41	80.14	67.20	11.29						
	2-Wire Voice Unbundled PBX Toll Terminal Hotel Ports			UEPFP	UEPXB	1.27	137.41	80.14	67.20	11.29						
	2-Wire Voice Unbundled PBX LD DDD Terminals Port			UEPFP	UEPXC	1.27	137.41	80.14	67.20	11.29						
	2-Wire Voice Unbundled PBX LD Terminal Switchboard Port			UEPFP	UEPXD	1.27	137.41	80.14	67.20	11.29						
	2-Wire Voice Unbundled PBX LD Terminal Switchboard IDD Capable Port			UEPFP	UEPXE	1.27	137.41	80.14	67.20	11.29						
	2-Wire Voice Unbundled 2-Way PBX Hotel/Hospital Economy Administrative Calling Port			UEPFP	UEPXL	1.27	137.41	80.14	67.20	11.29						
	2-Wire Voice Unbundled 2-Way PBX Hotel/Hospital Economy Room Calling Port			UEPFP	UEPXM	1.27	137.41	80.14	67.20	11.29						
	2-Wire Voice Unbundled 1-Way Outgoing PBX Hotel/Hospital Discount Room Calling Port			UEPFP	UEPXO	1.27	137.41	80.14	67.20	11.29						
	2-Wire Voice Unbundled 2-Way PBX Mississippi Local Economy Calling Port			UEPFP	UEPXQ	1.27	137.41	80.14	67.20	11.29						
	2-Wire Voice Unbundled 2-Way PBX Mississippi Local Optional Calling Port			UEPFP	UEPXR	1.27	137.41	80.14	67.20	11.29						
	2-Wire Voice Unbundled 1-Way Outgoing PBX Measured Port			UEPFP	UEPXS	1.27	137.41	80.14	67.20	11.29						
	Mississippi PBX 2-Way Combo Local Opt 2 Calling Port			UEPFP	UEPA5	1.27	137.41	80.14	67.20	11.29						
LOCAL NUMBER PORTABILITY																
	Local Number Portability (1 per port)			UEPFP	LNPCP	3.15	0.00	0.00								
INTEROFFICE TRANSPORT																
	Interoffice Transport - Dedicated - 2 Wire Voice Grade - Facility Termination			UEPFP	U1TV2	20.32	40.77	27.57	17.26	7.11						
	Interoffice Transport - Dedicated - 2 Wire Voice Grade - Per Mile or Fraction Mile			UEPFP	1L5XX	0.0088										
FEATURES																
	All Features Offered			UEPFP	UEPVF	2.56	0.00	0.00								
NONRECURRING CHARGES (NRCs) - CURRENTLY COMBINED																
	2-Wire Loop / Dedicated IO Transport / 2 Wire Line Port Combination - Conversion - Switch-as-is			UEPFP	USAC2		16.94	3.72								
	2-Wire Loop / Dedicated IO Transport / 2 Wire Line Port Combination - Conversion - Switch with change			UEPFP	USACC		16.94	3.72								
	Unbundled Miscellaneous Rate Element, Tag Designed Loop at End User Premise			UEPFP	URETN		11.19	1.10								
UNBUNDLED PORT/LOOP COMBINATIONS - COST BASED RATES																
2-WIRE VOICE GRADE LOOP- BUS ONLY - WITH 2-WIRE DID TRUNK PORT																
UNE Port/Loop Combination Rates																
	2-Wire VG Loop/2-Wire DID Trunk Port Combo - UNE Zone 1		1			21.32										
	2-Wire VG Loop/2-Wire DID Trunk Port Combo - UNE Zone 2		2			26.16										
	2-Wire VG Loop/2-Wire DID Trunk Port Combo - UNE Zone 3		3			34.98										
	2-Wire VG Loop/2-Wire DID Trunk Port Combo - UNE Zone 4		4			53.15										
UNE Loop Rates																

UNBUNDLED NETWORK ELEMENTS - Mississippi														Attachment: 2		Exhibit: A	
CATEGORY	RATE ELEMENTS	Interim	Zone	BCS		USOC	RATES ($)					Svc Order Submitted Elec per LSR	Svc Order Submitted Manually per LSR	Incremental Charge - Manual Svc Order vs. Electronic-1st	Incremental Charge - Manual Svc Order vs. Electronic-Add'l	Incremental Charge - Manual Svc Order vs. Electronic-Disc 1st	Incremental Charge - Manual Svc Order vs. Electronic-Disc Add'l
							Rec	Nonrecurring		Nonrecurring Disconnect		OSS Rates ($)					
								First	Add'l	First	Add'l	SOMEC	SOMAN	SOMAN	SOMAN	SOMAN	SOMAN
	2-Wire Analog Voice Grade Loop - (SL2) - UNE Zone 1		1	UEPPX		UECD1	13.89										
	2-Wire Analog Voice Grade Loop - (SL2) - UNE Zone 2		2	UEPPX		UECD1	18.75										
	2-Wire Analog Voice Grade Loop - (SL2) - UNE Zone 3		3	UEPPX		UECD1	27.55										
	2-Wire Analog Voice Grade Loop - (SL2) - UNE Zone 4		4	UEPPX		UECD1	45.72										
UNE Port Rate																	
	Exchange Ports - 2-Wire DID Port			UEPPX		UEPD1	7.43	225.96	87.13	114.59	14.25						
NONRECURRING CHARGES - CURRENTLY COMBINED																	
	2-Wire Voice Grade Loop / 2-Wire DID Trunk Port Combination - Switch-as-is			UEPPX		USAC1		7.35	1.88								
	2-Wire Voice Grade Loop / 2-Wire DID Trunk Port Conversion with BellSouth Allowable Changes			UEPPX		USA1C		7.35	1.88								
ADDITIONAL NRCs																	
	2-Wire DID Subsequent Activity - Add Trunks, Per Trunk			UEPPX		USAS1		26.94	26.94								
	Unbundled Miscellaneous Rate Element, Tag Designed Loop at End User Premise			UEPPX		URETN		11.19	1.10								
Telephone Number/Trunk Group Establisment Charges																	
	DID Trunk Termination (One Per Port)			UEPPX		NDT	0.00	0.00	0.00								
	Additional DID Numbers for each Group of 20 DID Numbers			UEPPX		ND4	0.00	0.00	0.00								
	DID Numbers, Non- consecutive DID Numbers , Per Number			UEPPX		ND5	0.00	0.00	0.00								
	Reserve Non-Consecutive DID numbers			UEPPX		ND6	0.00	0.00	0.00								
	Reserve DID Numbers			UEPPX		NDV	0.00	0.00	0.00								
LOCAL NUMBER PORTABILITY																	
	Local Number Portability (1 per port)			UEPPX		LNPCP	3.15	0.00	0.00								
2-WIRE ISDN DIGITAL GRADE LOOP WITH 2-WIRE ISDN DIGITAL LINE SIDE PORT																	
UNE Port/Loop Combination Rates																	
	2W ISDN Digital Grade Loop/2W ISDN Digital Line Side Port - UNE Zone 1		1	UEPPB	UEPPR		28.59										
	2W ISDN Digital Grade Loop/2W ISDN Digital Line Side Port - UNE Zone 2		2	UEPPB	UEPPR		35.00										
	2W ISDN Digital Grade Loop/2W ISDN Digital Line Side Port - UNE Zone 3		3	UEPPB	UEPPR		45.18										
	2W ISDN Digital Grade Loop/2W ISDN Digital Line Side Port - UNE Zone 4		4				67.61										
UNE Loop Rates																	
	2-Wire ISDN Digital Grade Loop - UNE Zone 1		1	UEPPB	UEPPR	USL2X	18.26										
	2-Wire ISDN Digital Grade Loop - UNE Zone 2		2	UEPPB	UEPPR	USL2X	24.67										
	2-Wire ISDN Digital Grade Loop - UNE Zone 3		3	UEPPB	UEPPR	USL2X	34.85										
	2-Wire ISDN Digital Grade Loop - UNE Zone 4		4	UEPPB	UEPPR	USL2X	57.28										
UNE Port Rate																	
	Exchange Port - 2-Wire ISDN Line Side Port			UEPPB	UEPPR	UEPPB	10.33	190.80	133.22	100.72	21.13						
NONRECURRING CHARGES - CURRENTLY COMBINED																	
	2-Wire ISDN Digital Grade Loop / 2-Wire ISDN Line Side Port Combination - Conversion			UEPPB	UEPPR	USACB	0.00	38.73	27.17								
ADDITIONAL NRCs																	
	Unbundled Miscellaneous Rate Element, Tag Designed Loop at End User Premise			UEPPB	UEPPR	URETN		11.19	1.10								
	Unbundled Miscellaneous Rate Element, Tag Loop at End User Premise			UEPPB	UEPPR	URETL		8.33	0.83								
LOCAL NUMBER PORTABILITY																	
	Local Number Portability (1 per port)			UEPPB	UEPPR	LNPCX	0.35	0.00	0.00								
B-CHANNEL USER PROFILE ACCESS:																	
	CVS/CSD (DMS/5ESS)			UEPPB	UEPPR	U1UCA	0.00	0.00	0.00								
	CVS (EWSD)			UEPPB	UEPPR	U1UCB	0.00	0.00	0.00								
	CSD			UEPPB	UEPPR	U1UCC	0.00	0.00	0.00								
B-CHANNEL AREA PLUS USER PROFILE ACCESS: (AL,KY,LA,MS SC,MS, & TN)																	
	CVS/CSD (DMS/5ESS)			UEPPB	UEPPR	U1UCD	0.00	0.00	0.00								
	CVS (EWSD)			UEPPB	UEPPR	U1UCE	0.00	0.00	0.00								
	CSD			UEPPB	UEPPR	U1UCF	0.00	0.00	0.00								

UNBUNDLED NETWORK ELEMENTS - Mississippi														Attachment: 2		Exhibit: A	
CATEGORY	RATE ELEMENTS	Interim	Zone	BCS	USOC	RATES ($)					Svc Order Submitted Elec per LSR	Svc Order Submitted Manually per LSR	Incremental Charge - Manual Svc Order vs. Electronic-1st	Incremental Charge - Manual Svc Order vs. Electronic-Add'l	Incremental Charge - Manual Svc Order vs. Electronic-Disc 1st	Incremental Charge - Manual Svc Order vs. Electronic-Disc Add'l
						Rec	Nonrecurring		Nonrecurring Disconnect		OSS Rates ($)					
							First	Add'l	First	Add'l	SOMEC	SOMAN	SOMAN	SOMAN	SOMAN	SOMAN
USER TERMINAL PROFILE																
	User Terminal Profile (EWSD only)			UEPPB UEPPR	U1UMA	0.00	0.00	0.00								
VERTICAL FEATURES																
	All Vertical Features - One per Channel B User Profile			UEPPB UEPPR	UEPVF	2.56	0.00	0.00								
INTEROFFICE CHANNEL MILEAGE																
	Interoffice Channel mileage each, including first mile and facilities termination			UEPPB UEPPR	M1GNC	22.5298	40.77	27.57	17.26	7.11						
	Interoffice Channel mileage each, additional mile			UEPPB UEPPR	M1GNM	0.0098	0.00	0.00								
4-WIRE DS1 DIGITAL LOOP WITH 4-WIRE ISDN DS1 DIGITAL TRUNK PORT																
The UNE-P DS1 combination rates below for in this rate exhibit apply to the embedded base in place as of 10/2/03 until 4/1/04. After 4/1/04 these rates shall revert to tariff rates or a separate commercial agreement.																
Requests for 4-Wire DS1 Digital Loop with 4-Wire ISDN DS1 Digital Trunk Port after the effective date of this amendment shall be provided pursuant to a separate agreement or tariff at BellSouth's discretion.																
UNE Port/Loop Combination Rates																
	4W DS1 Digital Loop/4W ISDN DS1 Digital Trunk Port - UNE Zone 1		1	UEPPP		155.43										
	4W DS1 Digital Loop/4W ISDN DS1 Digital Trunk Port - UNE Zone 2		2	UEPPP		205.74										
	4W DS1 Digital Loop/4W ISDN DS1 Digital Trunk Port - UNE Zone 3		3	UEPPP		283.10										
	4W DS1 Digital Loop/4W ISDN DS1 Digital Trunk Port - UNE Zone 4		4	UEPPP		534.81										
UNE Loop Rates																
	4-Wire DS1 Digital Loop - UNE Zone 1		1	UEPPP	USL4P	79.08										
	4-Wire DS1 Digital Loop - UNE Zone 2		2	UEPPP	USL4P	129.38										
	4-Wire DS1 Digital Loop - UNE Zone 3		3	UEPPP	USL4P	206.74										
	4-Wire DS1 Digital Loop - UNE Zone 4		4	UEPPP	USL4P	458.46										
UNE Port Rate																
	Exchange Ports - 4-Wire ISDN DS1 Port (E:4/1/2004)			UEPPP	UEPPP	76.35	458.93	260.59	127.75	32.76						
NONRECURRING CHARGES - CURRENTLY COMBINED																
	4-Wire DS1 Digital Loop / 4-Wire ISDN DS1 Digital Trunk Port Combination - Conversion -Switch-as-is (E:4/1/2004)			UEPPP	USACP	0.00	119.76	79.01								
ADDITIONAL NRCs																
	4-Wire DS1 Loop/4-W ISDN Digtl Trk Port - Subsqt Actvy-Inward/two way Tel Nos. (except NC)			UEPPP	PR7TF		0.49									
	4-Wire DS1 Loop / 4-Wire ISDN DS1 Digital Trunk Port - Outward Tel Numbers (All States except NC)			UEPPP	PR7TO		11.58	11.58								
	4-Wire DS1 Loop / 4-Wire ISDN DS1 Digital Trk Port - Subsequent Inward Tel Numbers			UEPPP	PR7ZT		23.15	23.15								
LOCAL NUMBER PORTABILITY																
	Local Number Portability (1 per port)			UEPPP	LNPCN	1.75										
INTERFACE (Provsioning Only)																
	Voice/Data			UEPPP	PR71V	0.00	0.00	0.00								
	Digital Data			UEPPP	PR71D	0.00	0.00	0.00								
	Inward Data			UEPPP	PR71E	0.00	0.00	0.00								
New or Additional "B" Channel																
	New or Additional - Voice/Data B Channel			UEPPP	PR7BV	0.00	14.61									
	New or Additional - Digital Data B Channel			UEPPP	PR7BF	0.00	14.61									
	New or Additional Inward Data B Channel			UEPPP	PR7BD	0.00	14.61									
CALL TYPES																
	Inward			UEPPP	PR7C1	0.00	0.00	0.00								
	Outward			UEPPP	PR7CO	0.00	0.00	0.00								
	Two-way			UEPPP	PR7CC	0.00	0.00	0.00								
Interoffice Channel Mileage																
	Fixed Each Including First Mile			UEPPP	1LN1A	57.53	89.79	82.28	16.66	14.90						
	Each Airline-Fractional Additional Mile			UEPPP	1LN1B	0.20										
4-WIRE DS1 DIGITAL LOOP WITH 4-WIRE DDITS TRUNK PORT																
The UNE-P DS1 combination rates below for in this rate exhibit apply to the embedded base in place as of 10/2/03 until 4/1/04. After 4/1/04 these rates shall revert to tariff rates or a separate commercial agreement.																
Requests for 4-Wire DS1 Digital Loop with 4-Wire DDITS after the effective date of this amendment shall be provided pursuant to a separate agreement or tariff at BellSouth's discretion.																
UNE Port/Loop Combination Rates																
	4W DS1 Digital Loop/4W DDITS Trunk Port - UNE Zone 1		1	UEPDC		131.78										

UNBUNDLED NETWORK ELEMENTS - Mississippi														Attachment: 2		Exhibit: A	
CATEGORY	RATE ELEMENTS	Interim	Zone	BCS	USOC	RATES ($)					Svc Order Submitted Elec per LSR	Svc Order Submitted Manually per LSR	Incremental Charge - Manual Svc Order vs. Electronic-1st	Incremental Charge - Manual Svc Order vs. Electronic-Add'l	Incremental Charge - Manual Svc Order vs. Electronic-Disc 1st	Incremental Charge - Manual Svc Order vs. Electronic-Disc Add'l
						Rec	Nonrecurring		Nonrecurring Disconnect		OSS Rates ($)					
							First	Add'l	First	Add'l	SOMEC	SOMAN	SOMAN	SOMAN	SOMAN	SOMAN
	4W DS1 Digital Loop/4W DDITS Trunk Port - UNE Zone 2		2	UEPDC		182.07										
	4W DS1 Digital Loop/4W DDITS Trunk Port - UNE Zone 3		3	UEPDC		259.44										
	4W DS1 Digital Loop/4W DDITS Trunk Port - UNE Zone 4		4	UEPDC		511.15										
UNE Loop Rates																
	4-Wire DS1 Digital Loop - UNE Zone 1		1	UEPDC	USLDC	79.08										
	4-Wire DS1 Digital Loop - UNE Zone 2		2	UEPDC	USLDC	129.38										
	4-Wire DS1 Digital Loop - UNE Zone 3		3	UEPDC	USLDC	206.74										
	4-Wire DS1 Digital Loop - UNE Zone 4		4	UEPDC	USLDC	458.46										
UNE Port Rate																
	4-Wire DDITS Digital Trunk Port (E:4/1/2004)			UEPDC	UDD1T	52.70	457.12	254.70	120.96	14.61						
NONRECURRING CHARGES - CURRENTLY COMBINED																
	4-Wire DS1 Digital Loop / 4-Wire DDITS Trunk Port Combination - Switch-as-is (E:4/1/2004)			UEPDC	USAC4		130.24	67.41								
	4-Wire DS1 Digital Loop / 4-Wire DDITS Trunk Port Combination - Conversion with DS1 Changes (E:4/1/2004)			UEPDC	USAWA		130.24	67.41								
	4-Wire DS1 Digital Loop / 4-Wire DDITS Trunk Port Combination - Conversion with Change - Trunk (E:4/1/2004)			UEPDC	USAWB		130.24	67.41								
ADDITIONAL NRCs																
	4-Wire DS1 Loop / 4-Wire DDITS Trunk Port - NRC - Subsequent Channel Activation/Chan - 2-Way Trunk			UEPDC	UDTTA		14.56	14.56								
	4-Wire DS1 Loop / 4-Wire DDITS Trunk Port - Subsequent Channel Activation/Chan - 1-Way Outward Trunk			UEPDC	UDTTB		14.56	14.56								
	4-Wire DS1 Loop / 4-Wire DDITS Trunk Port - Subsqnt Channel Activation/Chan Inward Trunk w/out DID			UEPDC	UDTTC		14.56	14.56								
	4-Wire DS1 Loop / 4-Wire DDITS Trunk Port - Subsqnt Chan Activation Per Chan - Inward Trunk with DID			UEPDC	UDTTD		14.56	14.56								
	4-Wire DS1 Loop / 4-Wire DDITS Trunk Port - Subsqnt Chan Activation / Chan - 2-Way DID w User Trans			UEPDC	UDTTE		14.56	14.56								
BIPOLAR 8 ZERO SUBSTITUTION																
	B8ZS -Superframe Format			UEPDC	CCOSF		0.00i	600.00s								
	B8ZS - Extended Superframe Format			UEPDC	CCOEF		0.00i	600.00s								
Alternate Mark Inversion																
	AMI -Superframe Format			UEPDC	MCOSF		0.00	0.00								
	AMI - Extended SuperFrame Format			UEPDC	MCOPO		0.00	0.00								
Telephone Number/Trunk Group Establisment Charges																
	Telephone Number for 2-Way Trunk Group			UEPDC	UDTGX	0.00										
	Telephone Number for 1-Way Outward Trunk Group			UEPDC	UDTGY	0.00										
	Telephone Number for 1-Way Inward Trunk Group Without DID			UEPDC	UDTGZ	0.00										
	DID Numbers for each Group of 20 DID Numbers			UEPDC	ND4	0.00										
	DID Numbers, Non- consecutive DID Numbers , Per Number			UEPDC	ND5	0.00										
	Reserve Non-Consecutive DID Nos.			UEPDC	ND6	0.00	0.00	0.00								
	Reserve DID Numbers			UEPDC	NDV	0.00	0.00	0.00								
Dedicated DS1 (Interoffice Channel Mileage) - FX/FCO for 4-Wire DS1 Digital Loop with 4-Wire DDITS Trunk Port																
	Interoffice Channel Mileage - Fixed rate 0-8 miles (Facilities Termination)			UEPDC	1LNO1	57.33	89.79	82.28	16.86	14.90						
	Interoffice Channel Mileage - Additional rate per mile - 0-8 miles			UEPDC	1LNOA	0.20	0.00	0.00								
	Interoffice Channel Mileage - Fixed rate 9-25 miles (Facilities Termination)			UEPDC	1LNO2	0.00	0.00	0.00								
	Interoffice Channel Mileage - Additional rate per mile - 9-25 miles			UEPDC	1LNOB	0.20	0.00	0.00								
	Interoffice Channel Mileage - Fixed rate 25+ miles (Facilities Termination)			UEPDC	1LNO3	0.00	0.00	0.00	0.00							
	Interoffice Channel Mileage - Additional rate per mile - 25+ miles			UEPDC	1LNOC	0.20	0.00	0.00								
	Local Number Portability, per DS0 Activated			UEPDC	LNPCP	3.15	0.00	0.00	0.00							
	Central Office Termininating Point			UEPDC	CTG	0.00										
4-WIRE DS1 LOOP WITH CHANNELIZATION WITH PORT																
System is 1 DS1 Loop, 1 D4 Channel Bank, and up to 24 Feature Activations																

UNBUNDLED NETWORK ELEMENTS - Mississippi													Attachment: 2		Exhibit: A	
CATEGORY	RATE ELEMENTS	Interim	Zone	BCS	USOC	RATES ($)					Svc Order Submitted Elec per LSR	Svc Order Submitted Manually per LSR	Incremental Charge - Manual Svc Order vs. Electronic-1st	Incremental Charge - Manual Svc Order vs. Electronic-Add'l	Incremental Charge - Manual Svc Order vs. Electronic-Disc 1st	Incremental Charge - Manual Svc Order vs. Electronic-Disc Add'l
						Rec	Nonrecurring		Nonrecurring Disconnect		OSS Rates ($)					
							First	Add'l	First	Add'l	SOMEC	SOMAN	SOMAN	SOMAN	SOMAN	SOMAN
	Each System can have up to 24 combinations of rates depending on type and number of ports used															
	The UNE-P DS1 combination rates below for 4-Wire DS1 Loop with Channelization with Port in this rate exhibit apply to the embedded base in place as of 10/2/03 until 4/1/04. After 4/1/04 these rates shall revert to tariff rates or a separate agreement.															
	Requests for 4-Wire DS1 Loop with Channelization with Port after the effective date of this amendment shall be provided pursuant to a separate agreement or tariff at BellSouth's discretion.															
	UNE DS1 Loop															
	4-Wire DS1 Loop - UNE Zone 1		1	UEPMG	USLDC	79.08	0.00	0.00								
	4-Wire DS1 Loop - UNE Zone 2		2	UEPMG	USLDC	129.38	0.00	0.00								
	4-Wire DS1 Loop - UNE Zone 3		3	UEPMG	USLDC	206.74	0.00	0.00								
	4-Wire DS1 Loop - UNE Zone 4		4	UEPMG	USLDC	458.46	0.00	0.00								
	UNE DSO Channelization Capacities (D4 Channel Bank Configurations)															
	24 DSO Channel Capacity - 1 per DS1			UEPMG	VUM24	95.06	0.00	0.00								
	48 DSO Channel Capacity - 1 per 2 DS1s			UEPMG	VUM48	190.12	0.00	0.00								
	96 DSO Channel Capacity -1per 4 DS1s			UEPMG	VUM96	380.24	0.00	0.00								
	144 DS0 Channel Capacity - 1 per 6 DS1s			UEPMG	VUM14	570.36	0.00	0.00								
	192 DS0 Channel Capacity -1 per 8 DS1s			UEPMG	VUM19	760.48	0.00	0.00								
	240 DS0 Channel Capacity - 1 per 10 DS1s			UEPMG	VUM2O	950.60	0.00	0.00								
	288 DS0 Channel Capacity - 1 per 12 DS1s			UEPMG	VUM28	1,140.72	0.00	0.00								
	384 DS0 Channel Capacity - 1 per 16 DS1s			UEPMG	VUM38	1,520.96	0.00	0.00								
	480 DS0 Channel Capacity - 1 per 20 DS1s			UEPMG	VUM4O	1,901.20	0.00	0.00								
	576 DS0 Channel Capacity -1 per 24 DS1s			UEPMG	VUM57	2,281.44	0.00	0.00								
	672 DS0 Channel Capacity - 1 per 28 DS1s			UEPMG	VUM67	2,661.68	0.00	0.00								
	Non-Recurring Charges (NRC) Associated with 4-Wire DS1 Loop with Channeliztion with Port - Conversion Charge Based on a System															
	A Minimum System configuration is One (1) DS1, One (1) D4 Channel Bank, and Up To 24 DSO Ports with Feature Activations.															
	Multiples of this configuration functioning as one are considered Add'l after the minimum system configuration is counted.															
	NRC - Conversion (Currently Combined) with or without BellSouth Allowed Changes			UEPMG	USAC4	0.00	151.35	8.41								
	System Additions at End User Locations Where 4-Wire DS1 Loop with Channelization with Port Combination Currently Exists and															
	New (Not Currently Combined) in all states, except in Density Zone 1 of Top 8 MSA's															
	1 DS1/D4 Channel Bank - Additionally Add NRC for each Port and Assoc Fea Activation (E:4/1/2004)			UEPMG	VUMD4	0.00	715.15	327.39	148.05	17.56						
	Bipolar 8 Zero Substitution															
	Clear Channel Capability Format, superframe - Subsequent Activity Only			UEPMG	CCOSF	0.00	0.00i	600.00s								
	Clear Channel Capability Format - Extended Superframe - Subsequent Activity Only			UEPMG	CCOEF	0.00	0.00i	600.00s								
	Alternate Mark Inversion (AMI)															
	Superframe Format			UEPMG	MCOSF	0.00	0.00	0.00								
	Extended Superframe Format			UEPMG	MCOPO	0.00	0.00	0.00								
	Exchange Ports Associated with 4-Wire DS1 Loop with Channelization with Port															
	Exchange Ports															
	Line Side Combination Channelized PBX Trunk Port - Business (E:4/1/2004)			UEPPX	UEPCX	1.23	0.00	0.00	0.00	0.00						
	Line Side Outward Channelized PBX Trunk Port - Business (E:4/1/2004)			UEPPX	UEPOX	1.23	0.00	0.00	0.00	0.00						
	Line Side Inward Only Channelized PBX Trunk Port without DID (E:4/1/2004)			UEPPX	UEP1X	1.23	0.00	0.00	0.00	0.00						
	2-Wire Trunk Side Unbundled Channelized DID Trunk Port (E:4/1/2004)			UEPPX	UEPDM	7.40	0.00	0.00	0.00	0.00						
	Unbundled Exchange Ports, 2-Wire Channelized – Outdial – (AL, KY, LA, MS, & TN)(Conversion from Network Access Service) (E:4/1/2004)			UEPPX	UEPCY	1.23	0.00	0.00	0.00	0.00						
	Unbundled Exchange Ports, 2-Wire Channelized – Combination (AL, KY, LA, MS, & TN) (Conversion from Network Access Service) (E:4/1/2004)			UEPPX	UEPCT	1.23	0.00	0.00	0.00	0.00						
	Unbundled Exchange Ports, 2-Wire Channelized – Outdial– Mississippi Only – Calling Plan (E:4/1/2004)			UEPPX	UEPC4	1.23	0.00	0.00	0.00	0.00						
	Unbundled Exchange Ports, 2-Wire Channelized – Two Way - Mississippi Only – Calling Plan (E:4/1/2004)			UEPPX	UEPC7	1.23	0.00	0.00	0.00	0.00						
	Feature Activations - Unbundled Loop Concentration															

UNBUNDLED NETWORK ELEMENTS - Mississippi														Attachment: 2		Exhibit: A	
CATEGORY		RATE ELEMENTS	Interim	Zone	BCS	USOC	RATES ($)					Svc Order Submitted Elec per LSR	Svc Order Submitted Manually per LSR	Incremental Charge - Manual Svc Order vs. Electronic-1st	Incremental Charge - Manual Svc Order vs. Electronic-Add'l	Incremental Charge - Manual Svc Order vs. Electronic-Disc 1st	Incremental Charge - Manual Svc Order vs. Electronic-Disc Add'l
							Rec	Nonrecurring		Nonrecurring Disconnect		OSS Rates ($)					
								First	Add'l	First	Add'l	SOMEC	SOMAN	SOMAN	SOMAN	SOMAN	SOMAN
		Feature (Service) Activation for each Line Port Terminated in D4 Bank			UEPPX	1PQWM	0.61	25.36	13.39	4.29	4.26						
		Feature (Service) Activation for each Trunk Port Terminated in D4 Bank			UEPPX	1PQWU	0.61	78.03	18.39	60.66	11.85						
	Telephone Number/ Group Establishment Charges for DID Service																
		DID Trunk Termination (1 per Port)			UEPPX	NDT	0.00	0.00	0.00								
		DID Numbers - groups of 20 - Valid all States			UEPPX	ND4	0.00	0.00	0.00								
		Non-Consecutive DID Numbers - per number			UEPPX	ND5	0.00	0.00	0.00								
		Reserve Non-Consecutive DID Numbers			UEPPX	ND6	0.00	0.00	0.00								
		Reserve DID Numbers			UEPPX	NDV	0.00	0.00	0.00								
	Local Number Portability																
		Local Number Portability - 1 per port			UEPPX	LNPCP	3.15	0.00	0.00								
	FEATURES - Vertical and Optional																
	Local Switching Features Offered with Line Side Ports Only																
		All Features Available			UEPPX	UEPVF	2.56	0.00	0.00								
UNBUNDLED CENTREX PORT/LOOP COMBINATIONS - COST BASED RATES																	
	1. Cost Based Rates are applied where BellSouth is required by FCC and/or State Commission rule to provide Unbundled Local Switching or Switch Ports.																
	2. Features shall apply to the Unbundled Port/Loop Combination - Cost Based Rate section in the same manner as they are applied to the Stand-Alone Unbundled Port section of this Rate Exhibit.																
	3. End Office and Tandem Switching Usage and Common Transport Usage rates in the Port section of this rate exhibit shall apply to all combinations of loop/port network elements except for UNE Coin Port/Loop Combinations.																
	4. The first and additional Port nonrecurring charges apply to Not Currently Combined Combos. For Currently Combined Combos, the nonrecurring charges shall be those identified in the Nonrecurring - Currently Combined sections. Additional NRCs may apply also and are categorized accordingly.																
	5. Market Rates for Unbundled Centrex Port/Loop Combination will be negotiated on an Individual Case Basis, until further notice.																
	UNE-P CENTREX - 1AESS - (Valid in AL,FL,GA,KY,LA,MS,&TN only)																
	2-Wire VG Loop/2-Wire Voice Grade Port (Centrex) Combo																
	UNE Port/Loop Combination Rates (Non-Design)																
		2-Wire VG Loop/2-Wire Voice Grade Port (Centrex) Port Combo - Non-Design		1	UEP91		12.22										
		2-Wire VG Loop/2-Wire Voice Grade Port (Centrex)Port Combo - Non-Design		2	UEP91		17.13										
		2-Wire VG Loop/2-Wire Voice Grade Port (Centrex)Port Combo - Non-Design		3	UEP91		26.26										
		2-Wire VG Loop/2-Wire Voice Grade Port (Centrex) Port Combo - Non-Design		4	UEP91		44.91										
	UNE Port/Loop Combination Rates (Design)																
		2-Wire VG Loop/2-Wire Voice Grade Port (Centrex) Port Combo - Design		1	UEP91		15.12										
		2-Wire VG Loop/2-Wire Voice Grade Port (Centrex)Port Combo - Design		2	UEP91		19.98										
		2-Wire VG Loop/2-Wire Voice Grade Port (Centrex)Port Combo - Design		3	UEP91		28.78										
		2-Wire VG Loop/2-Wire Voice Grade Port (Centrex) Port Combo - Design		4	UEP91		46.95										
	UNE Loop Rate																
		2-Wire Voice Grade Loop (SL 1) - Zone 1		1	UEP91	UECS1	10.98										
		2-Wire Voice Grade Loop (SL 1) - Zone 2		2	UEP91	UECS1	15.91										
		2-Wire Voice Grade Loop (SL 1) - Zone 3		3	UEP91	UECS1	25.04										
		2-Wire Voice Grade Loop (SL 1) - Zone 4		4	UEP91	UECS1	43.68										
		2-Wire Voice Grade Loop (SL 2) - Zone 1		1	UEP91	UECS2	13.89										
		2-Wire Voice Grade Loop (SL 2) - Zone 2		2	UEP91	UECS2	18.75										
		2-Wire Voice Grade Loop (SL 2) - Zone 3		3	UEP91	UECS2	27.55										
		2-Wire Voice Grade Loop (SL 2) - Zone 4		4	UEP91	UECS2	45.72										
	UNE Ports																
	All States (Except North Carolina and Sout Carolina)																
		2-Wire Voice Grade Port (Centrex) Basic Local Area			UEP91	UEPYA	1.23	40.31	19.84	24.90	6.58						
		2-Wire Voice Grade Port (Centrex 800 termination)Basic Local Area			UEP91	UEPYB	1.23	40.31	19.84	24.90	6.58						
		2-Wire Voice Grade Port (Centrex with Caller ID)Note1 Basic Local Area			UEP91	UEPYH	1.23	40.31	19.84	24.90	6.58						

UNBUNDLED NETWORK ELEMENTS - Mississippi														Attachment: 2		Exhibit: A	
CATEGORY		RATE ELEMENTS	Interim	Zone	BCS	USOC	RATES ($)					Svc Order Submitted Elec per LSR	Svc Order Submitted Manually per LSR	Incremental Charge - Manual Svc Order vs. Electronic-1st	Incremental Charge - Manual Svc Order vs. Electronic-Add'l	Incremental Charge - Manual Svc Order vs. Electronic-Disc 1st	Incremental Charge - Manual Svc Order vs. Electronic-Disc Add'l
							Rec	Nonrecurring		Nonrecurring Disconnect		OSS Rates ($)					
								First	Add'l	First	Add'l	SOMEC	SOMAN	SOMAN	SOMAN	SOMAN	SOMAN
		2-Wire Voice Grade Port (Centrex from diff Serving Wire Center) Note 2, 3 Basic Local Area			UEP91	UEPYM	1.23	108.35	70.57	54.24	11.70						
		2-Wire Voice Grade Port, Diff Serving Wire Center - 800 Service Term - Basic Local Area			UEP91	UEPYZ	1.23	108.35	70.57	54.24	11.70						
		2-Wire Voice Grade Port terminated in on Megalink or equivalent - Basic Local Area			UEP91	UEPY9	1.23	40.31	19.84	24.90	6.58						
		2-Wire Voice Grade Port Terminated on 800 Service Term - Basic Local Area			UEP91	UEPY2	1.23	40.31	19.84	24.90	6.58						
	AL, KY, LA, MS, & TN Only																
		2-Wire Voice Grade Port (Centrex)			UEP91	UEPQA	1.23	40.31	19.84	24.90	6.58						
		2-Wire Voice Grade Port (Centrex 800 termination)			UEP91	UEPQB	1.23	40.31	19.84	24.90	6.58						
		2-Wire Voice Grade Port (Centrex with Caller ID)1			UEP91	UEPQH	1.23	40.31	19.84	24.90	6.58						
		2-Wire Voice Grade Port (Centrex from diff Serving Wire Center)2,3			UEP91	UEPQM	1.23	108.35	70.57	54.24	11.70						
		2-Wire Voice Grade Port, Diff Serving Wire Center - 2,3 - 800 Service Term			UEP91	UEPQZ	1.23	108.35	70.57	54.24	11.70						
		2-Wire Voice Grade Port terminated in on Megalink or equivalent			UEP91	UEPQ9	1.23	40.31	19.84	24.90	6.58						
		2-Wire Voice Grade Port Terminated on 800 Service Term			UEP91	UEPQ2	1.23	40.31	19.84	24.90	6.58						
	Local Switching																
		Centrex Intercom Funtionality, per port			UEP91	URECS	0.7947										
	Local Number Portability																
		Local Number Portability (1 per port)			UEP91	LNPCC	0.35										
	Features																
		All Standard Features Offered, per port			UEP91	UEPVF	2.56										
		All Select Features Offered, per port			UEP91	UEPVS	0.00	404.98									
		All Centrex Control Features Offered, per port			UEP91	UEPVC	2.56										
	NARS																
		Unbundled Network Access Register - Combination			UEP91	UARCX	0.00	0.00	0.00	0.00	0.00						
		Unbundled Network Access Register - Indial			UEP91	UAR1X	0.00	0.00	0.00	0.00	0.00						
		Unbundled Network Access Register - Outdial			UEP91	UAROX	0.00	0.00	0.00	0.00	0.00						
	Miscellaneous Terminations																
	2-Wire Trunk Side																
		Trunk Side Terminations, each			UEP91	CENA6	8.25	120.00	18.85	61.77	3.88						
	Interoffice Channel Mileage - 2-Wire																
		Interoffice Channel Facilities Termination - Voice Grade			UEP91	M1GBC	22.52	40.77	27.57	17.26	7.11						
		Interoffice Channel mileage, per mile or fraction of mile			UEP91	M1GBM	0.0098										
	Feature Activations (DS0) Centrex Loops on Channelized DS1 Service																
	D4 Channel Bank Feature Activations																
		Feature Activation on D-4 Channel Bank Centrex Loop Slot			UEP91	1PQWS	0.57										
		Feature Activation on D-4 Channel Bank FX line Side Loop Slot			UEP91	1PQW6	0.57										
		Feature Activation on D-4 Channel Bank FX Trunk Side Loop Slot			UEP91	1PQW7	0.57										
		Feature Activation on D-4 Channel Bank Centrex Loop Slot - Different Wire Center			UEP91	1PQWP	0.57										
		Feature Activation on D-4 Channel Bank Private Line Loop Slot			UEP91	1PQWV	0.57										
		Feature Activation on D-4 Channel Bank Tjie Line/Trunk Loop Slot			UEP91	1PQWQ	0.57										
		Feature Activation on D-4 Channel Bank WATS Loop Slot			UEP91	1PQWA	0.57										
	Non-Recurring Charges (NRC) Associated with UNE-P Centrex																
		Conversion - Currently Combined Switch-As-Is with allowed changes, per port			UEP91	USAC2		0.10	0.10								
		Conversion of Existing Centrex Common Block			UEP91	USACN		37.97	16.68								
		New Centrex Standard Common Block			UEP91	M1ACS	0.00	666.32									
		New Centrex Customized Common Block			UEP91	M1ACC	0.00	666.32									
		Secondary Block, per Block			UEP91	M2CC1	0.00	77.91									
		NAR Establishment Charge, Per Occasion			UEP91	URECA	0.00	72.63									

UNBUNDLED NETWORK ELEMENTS - Mississippi														Attachment: 2		Exhibit: A	
CATEGORY		RATE ELEMENTS	Interim	Zone	BCS	USOC	RATES ($)					Svc Order Submitted Elec per LSR	Svc Order Submitted Manually per LSR	Incremental Charge - Manual Svc Order vs. Electronic-1st	Incremental Charge - Manual Svc Order vs. Electronic-Add'l	Incremental Charge - Manual Svc Order vs. Electronic-Disc 1st	Incremental Charge - Manual Svc Order vs. Electronic-Disc Add'l
							Rec	Nonrecurring		Nonrecurring Disconnect		OSS Rates ($)					
								First	Add'l	First	Add'l	SOMEC	SOMAN	SOMAN	SOMAN	SOMAN	SOMAN
	Additional Non-Recurring Charges (NRC)																
		Unbundled Miscellaneous Rate Element, Tag Loop at End Use Premise			UEP91	URETL		8.33	0.83								
		Unbundled Miscellaneous Rate Element, Tag Design Loop at End Use Premise			UEP91	URETN		11.19	1.10								
	UNE-P CENTREX - 5ESS (Valid in All States)																
	2-Wire VG Loop/2-Wire Voice Grade Port (Centrex) Combo																
	UNE Port/Loop Combination Rates (Non-Design)																
		2-Wire VG Loop/2-Wire Voice Grade Port (Centrex) Port Combo - Non-Design		1	UEP95		12.22										
		2-Wire VG Loop/2-Wire Voice Grade Port (Centrex)Port Combo - Non-Design		2	UEP95		17.13										
		2-Wire VG Loop/2-Wire Voice Grade Port (Centrex)Port Combo - Non-Design		3	UEP95		26.26										
		2-Wire VG Loop/2-Wire Voice Grade Port (Centrex) Port Combo - Non-Design		4	UEP95		44.91										
	UNE Port/Loop Combination Rates (Design)																
		2-Wire VG Loop/2-Wire Voice Grade Port (Centrex) Port Combo - Design		1	UEP95		15.12										
		2-Wire VG Loop/2-Wire Voice Grade Port (Centrex)Port Combo - Design		2	UEP95		19.98										
		2-Wire VG Loop/2-Wire Voice Grade Port (Centrex)Port Combo - Design		3	UEP95		28.78										
		2-Wire VG Loop/2-Wire Voice Grade Port (Centrex) Port Combo - Design		4	UEP95		46.95										
	UNE Loop Rate																
		2-Wire Voice Grade Loop (SL 1) - Zone 1		1	UEP95	UECS1	10.98										
		2-Wire Voice Grade Loop (SL 1) - Zone 2		2	UEP95	UECS1	15.91										
		2-Wire Voice Grade Loop (SL 1) - Zone 3		3	UEP95	UECS1	25.04										
		2-Wire Voice Grade Loop (SL 1) - Zone 4		4	UEP95	UECS1	43.68										
		2-Wire Voice Grade Loop (SL 2) - Zone 1		1	UEP95	UECS2	13.89										
		2-Wire Voice Grade Loop (SL 2) - Zone 2		2	UEP95	UECS2	18.75										
		2-Wire Voice Grade Loop (SL 2) - Zone 3		3	UEP95	UECS2	27.55										
		2-Wire Voice Grade Loop (SL 2) - Zone 4		4	UEP95	UECS2	45.72										
	UNE Port Rate																
	All States																
		2-Wire Voice Grade Port (Centrex) Basic Local Area			UEP95	UEPYA	1.23	40.31	19.84	24.90	6.58						
		2-Wire Voice Grade Port (Centrex 800 termination)			UEP95	UEPYB	1.23	40.31	19.84	24.90	6.58						
		2-Wire Voice Grade Port (Centrex with Caller ID)1Basic Local Area			UEP95	UEPYH	1.23	40.31	19.84	24.90	6.58						
		2-Wire Voice Grade Port (Centrex from diff Serving Wire Center)2,3 Basic Local Area			UEP95	UEPYM	1.23	108.35	70.57	54.24	11.70						
		2-Wire Voice Grade Port, Diff Serving Wire Center 2,3 - 800 Service Term - Basic Local Area			UEP95	UEPYZ	1.23	108.35	70.57	54.24	11.70						
		2-Wire Voice Grade Port terminated in on Megalink or equivalent - Basic Local Area			UEP95	UEPY9	1.23	40.31	19.84	24.90	6.58						
		2-Wire Voice Grade Port Terminated on 800 Service Term - Basic Local Area			UEP95	UEPY2	1.23	40.31	19.84	24.90	6.58						
	AL, KY, LA, MS, SC, & TN Only																
		2-Wire Voice Grade Port (Centrex)			UEP95	UEPQA	1.23	40.31	19.84	24.90	6.58						
		2-Wire Voice Grade Port (Centrex 800 termination)			UEP95	UEPQB	1.23	40.31	19.84	24.90	6.58						
		2-Wire Voice Grade Port (Centrex with Caller ID)1			UEP95	UEPQH	1.23	40.31	19.84	24.90	6.58						
		2-Wire Voice Grade Port (Centrex from diff Serving Wire Center)2,3			UEP95	UEPQM	1.23	108.35	70.57	54.24	11.70						
		2-Wire Voice Grade Port, Diff Serving Wire Center - 800 Service Term 2,3			UEP95	UEPQZ	1.23	108.35	70.57	54.24	11.70						
		2-Wire Voice Grade Port terminated in on Megalink or equivalent			UEP95	UEPQ9	1.23	40.31	19.84	24.90	6.58						
		2-Wire Voice Grade Port Terminated on 800 Service Term			UEP95	UEPQ2	1.23	40.31	19.84	24.90	6.58						

UNBUNDLED NETWORK ELEMENTS - Mississippi														Attachment: 2		Exhibit: A	
CATEGORY		RATE ELEMENTS	Interim	Zone	BCS	USOC	RATES ($)					Svc Order Submitted Elec per LSR	Svc Order Submitted Manually per LSR	Incremental Charge - Manual Svc Order vs. Electronic-1st	Incremental Charge - Manual Svc Order vs. Electronic-Add'l	Incremental Charge - Manual Svc Order vs. Electronic-Disc 1st	Incremental Charge - Manual Svc Order vs. Electronic-Disc Add'l
							Rec	Nonrecurring		Nonrecurring Disconnect		OSS Rates ($)					
								First	Add'l	First	Add'l	SOMEC	SOMAN	SOMAN	SOMAN	SOMAN	SOMAN
	FL & GA Only																
	Local Switching																
		Centrex Intercom Funtionality, per port			UEP95	URECS	0.7947										
	Local Number Portability																
		Local Number Portability (1 per port)			UEP95	LNPCC	0.35										
	Features																
		All Standard Features Offered, per port			UEP95	UEPVF	2.56										
		All Select Features Offered, per port			UEP95	UEPVS	0.00	404.98									
		All Centrex Control Features Offered, per port			UEP95	UEPVC	2.56										
	NARS																
		Unbundled Network Access Register - Combination			UEP95	UARCX	0.00	0.00	0.00	0.00	0.00						
		Unbundled Network Access Register - Indial			UEP95	UAR1X	0.00	0.00	0.00	0.00	0.00						
		Unbundled Network Access Register - Outdial			UEP95	UAROX	0.00	0.00	0.00	0.00	0.00						
	Miscellaneous Terminations																
	2-Wire Trunk Side																
		Trunk Side Terminations, each			UEP95	CEND6	8.25	120.00	18.85	61.77	3.88						
	4-Wire Digital (1.544 Megabits)																
		DS1 Circuit Terminations, each			UEP95	M1HD1	58.41	203.19	96.25	74.86	2.54						
		DS0 Channels Activated, each			UEP95	M1HDO	0.00	14.56									
	Interoffice Channel Mileage - 2-Wire																
		Interoffice Channel Facilities Termination			UEP95	M1GBC	22.52	40.77	27.57	17.26	7.11						
		Interoffice Channel mileage, per mile or fraction of mile			UEP95	M1GBM	0.0098										
	Feature Activations (DS0) Centrex Loops on Channelized DS1 Service																
	D4 Channel Bank Feature Activations																
		Feature Activation on D-4 Channel Bank Centrex Loop Slot			UEP95	1PQWS	0.57										
		Feature Activation on D-4 Channel Bank FX line Side Loop Slot			UEP95	1PQW6	0.57										
		Feature Activation on D-4 Channel Bank FX Trunk Side Loop Slot			UEP95	1PQW7	0.57										
		Feature Activation on D-4 Channel Bank Centrex Loop Slot - Different Wire Center			UEP95	1PQWP	0.57										
		Feature Activation on D-4 Channel Bank Private Line Loop Slot			UEP95	1PQWV	0.57										
		Feature Activation on D-4 Channel Bank Tjie Line/Trunk Loop Slot			UEP95	1PQWQ	0.57										
		Feature Activation on D-4 Channel Bank WATS Loop Slot			UEP95	1PQWA	0.57										
	Non-Recurring Charges (NRC) Associated with UNE-P Centrex																
		NRC Conversion Currently Combined Switch-As-Is with allowed changes, per port			UEP95	USAC2		0.10	0.10								
		Conversion of Existing Centrex Common Block, each			UEP95	USACN		37.97	16.68								
		New Centrex Standard Common Block			UEP95	M1ACS	0.00	666.32									
		New Centrex Customized Common Block			UEP95	M1ACC	0.00	666.32									
		NAR Establishment Charge, Per Occasion			UEP95	URECA	0.00	72.63									
	Additional Non-Recurring Charges (NRC)																
		Unbundled Miscellaneous Rate Element, Tag Loop at End Use Premise			UEP95	URETL		8.33	0.83								
		Unbundled Miscellaneous Rate Element, Tag Design Loop at End Use Premise			UEP95	URETN		11.19	1.10								
	UNE-P CENTREX - DMS100 (Valid in All States)																
	2-Wire VG Loop/2-Wire Voice Grade Port (Centrex) Combo																
	UNE Port/Loop Combination Rates (Non-Design)																
		2-Wire VG Loop/2-Wire Voice Grade Port (Centrex) Port Combo - Non-Design		1	UEP9D		12.22										
		2-Wire VG Loop/2-Wire Voice Grade Port (Centrex)Port Combo - Non-Design		2	UEP9D		17.13										
		2-Wire VG Loop/2-Wire Voice Grade Port (Centrex)Port Combo - Non-Design		3	UEP9D		26.26										
		2-Wire VG Loop/2-Wire Voice Grade Port (Centrex) Port Combo - Non-Design		4	UEP9D		44.91										

UNBUNDLED NETWORK ELEMENTS - Mississippi														Attachment: 2		Exhibit: A	
CATEGORY		RATE ELEMENTS	Interim	Zone	BCS	USOC	RATES ($)					Svc Order Submitted Elec per LSR	Svc Order Submitted Manually per LSR	Incremental Charge - Manual Svc Order vs. Electronic-1st	Incremental Charge - Manual Svc Order vs. Electronic-Add'l	Incremental Charge - Manual Svc Order vs. Electronic-Disc 1st	Incremental Charge - Manual Svc Order vs. Electronic-Disc Add'l
							Rec	Nonrecurring		Nonrecurring Disconnect		OSS Rates ($)					
								First	Add'l	First	Add'l	SOMEC	SOMAN	SOMAN	SOMAN	SOMAN	SOMAN
	UNE Port/Loop Combination Rates (Design)																
		2-Wire VG Loop/2-Wire Voice Grade Port (Centrex) Port Combo - Design		1	UEP9D		15.12										
		2-Wire VG Loop/2-Wire Voice Grade Port (Centrex)Port Combo - Design		2	UEP9D		19.98										
		2-Wire VG Loop/2-Wire Voice Grade Port (Centrex)Port Combo - Design		3	UEP9D		28.78										
		2-Wire VG Loop/2-Wire Voice Grade Port (Centrex) Port Combo - Design		4	UEP9D		46.95										
	UNE Loop Rate																
		2-Wire Voice Grade Loop (SL 1) - Zone 1		1	UEP9D	UECS1	10.98										
		2-Wire Voice Grade Loop (SL 1) - Zone 2		2	UEP9D	UECS1	15.91										
		2-Wire Voice Grade Loop (SL 1) - Zone 3		3	UEP9D	UECS1	25.04										
		2-Wire Voice Grade Loop (SL 1) - Zone 4		4	UEP9D	UECS1	43.68										
		2-Wire Voice Grade Loop (SL 2) - Zone 1		1	UEP9D	UECS2	13.89										
		2-Wire Voice Grade Loop (SL 2) - Zone 2		2	UEP9D	UECS2	18.75										
		2-Wire Voice Grade Loop (SL 2) - Zone 3		3	UEP9D	UECS2	27.55										
		2-Wire Voice Grade Loop (SL 2) - Zone 4		4	UEP9D	UECS2	45.72										
	UNE Port Rate																
	ALL STATES																
		2-Wire Voice Grade Port (Centrex) Basic Local Area			UEP9D	UEPYA	1.23	40.31	19.84	24.90	6.58						
		2-Wire Voice Grade Port (Centrex 800 termination)Basic Local Area			UEP9D	UEPYB	1.23	40.31	19.84	24.90	6.58						
		2-Wire Voice Grade Port (Centrex / EBS-PSET)3Basic Local Area			UEP9D	UEPYC	1.23	40.31	19.84	24.90	6.58						
		2-Wire Voice Grade Port (Centrex / EBS-M5009)3Basic Local Area			UEP9D	UEPYD	1.23	40.31	19.84	24.90	6.58						
		2-Wire Voice Grade Port (Centrex / EBS-M5209))3 Basic Local Area			UEP9D	UEPYE	1.23	40.31	19.84	24.90	6.58						
		2-Wire Voice Grade Port (Centrex / EBS-M5112))3 Basic Local Area			UEP9D	UEPYF	1.23	40.31	19.84	24.90	6.58						
		2-Wire Voice Grade Port (Centrex / EBS-M5312))3Basic Local Area			UEP9D	UEPYG	1.23	40.31	19.84	24.90	6.58						
		2-Wire Voice Grade Port (Centrex / EBS-M5008))3 Basic Local Area			UEP9D	UEPYT	1.23	40.31	19.84	24.90	6.58						
		2-Wire Voice Grade Port (Centrex / EBS-M5208))3 Basic Local Area			UEP9D	UEPYU	1.23	40.31	19.84	24.90	6.58						
		2-Wire Voice Grade Port (Centrex / EBS-M5216))3 Basic Local Area			UEP9D	UEPYV	1.23	40.31	19.84	24.90	6.58						
		2-Wire Voice Grade Port (Centrex / EBS-M5316))3 Basic Local Area			UEP9D	UEPY3	1.23	40.31	19.84	24.90	6.58						
		2-Wire Voice Grade Port (Centrex with Caller ID) Basic Local Area			UEP9D	UEPYH	1.23	40.31	19.84	24.90	6.58						
		2-Wire Voice Grade Port (Centrex/Caller ID/Msg Wtg Lamp Indication))4 Basic Local Area			UEP9D	UEPYW	1.23	40.31	19.84	24.90	6.58						
		2-Wire Voice Grade Port (Centrex/Msg Wtg Lamp Indication))4 Basic Local Area			UEP9D	UEPYJ	1.23	40.31	19.84	24.90	6.58						
		2-Wire Voice Grade Port (Centrex from diff Serving Wire Center) 2,3-Basic Local Area			UEP9D	UEPYM	1.23	108.35	70.57	54.24	11.70						
		2-Wire Voice Grade Port (Centrex/differ SWC /EBS-PSET)2,3,4 Basic Local Area			UEP9D	UEPYO	1.23	108.35	70.57	54.24	11.70						
		2-Wire Voice Grade Port (Centrex/differ SWC /EBS-M5009)2,3,4 Basic Local Area			UEP9D	UEPYP	1.23	108.35	70.57	54.24	11.70						
		2-Wire Voice Grade Port (Centrex/differ SWC /EBS-5209)2,3,4 Basic Local Area			UEP9D	UEPYQ	1.23	108.35	70.57	54.24	11.70						
		2-Wire Voice Grade Port (Centrex/differ SWC /EBS-M5112)2,3,4 Basic Local Area			UEP9D	UEPYR	1.23	108.35	70.57	54.24	11.70						
		2-Wire Voice Grade Port (Centrex/differ SWC /EBS-M5312)2,3,4 Basic Local Area			UEP9D	UEPYS	1.23	108.35	70.57	54.24	11.70						

UNBUNDLED NETWORK ELEMENTS - Mississippi														Attachment: 2		Exhibit: A	
CATEGORY		RATE ELEMENTS	Interim	Zone	BCS	USOC	RATES ($)					Svc Order Submitted Elec per LSR	Svc Order Submitted Manually per LSR	Incremental Charge - Manual Svc Order vs. Electronic-1st	Incremental Charge - Manual Svc Order vs. Electronic-Add'l	Incremental Charge - Manual Svc Order vs. Electronic-Disc 1st	Incremental Charge - Manual Svc Order vs. Electronic-Disc Add'l
							Rec	Nonrecurring		Nonrecurring Disconnect		OSS Rates ($)					
								First	Add'l	First	Add'l	SOMEC	SOMAN	SOMAN	SOMAN	SOMAN	SOMAN
		2-Wire Voice Grade Port (Centrex/differ SWC /EBS-M5008)2,3,4 Basic Local Area			UEP9D	UEPY4	1.23	108.35	70.57	54.24	11.70						
		2-Wire Voice Grade Port (Centrex/differ SWC /EBS-M5208)2, 3 Basic Local Area			UEP9D	UEPY5	1.23	108.35	70.57	54.24	11.70						
		2-Wire Voice Grade Port (Centrex/differ SWC /EBS-M5216)2,3,4 Basic Local Area			UEP9D	UEPY6	1.23	108.35	70.57	54.24	11.70						
		2-Wire Voice Grade Port (Centrex/differ SWC /EBS-M5316)2,3,4 Basic Local Area			UEP9D	UEPY7	1.23	108.35	70.57	54.24	11.70						
		2-Wire Voice Grade Port, Diff Serving Wire Center - 800 Service Term 2,3			UEP9D	UEPYZ	1.23	108.35	70.57	54.24	11.70						
		2-Wire Voice Grade Port terminated in on Megalink or equivalent Basic Local Area			UEP9D	UEPY9	1.23	40.31	19.84	24.90	6.58						
		2-Wire Voice Grade Port Terminated on 800 Service Term Basic Local Area			UEP9D	UEPY2	1.23	40.31	19.84	24.90	6.58						
	AL, KY, LA, MS, SC, & TN Only																
		2-Wire Voice Grade Port (Centrex)			UEP9D	UEPQA	1.23	40.31	19.84	24.90	6.58						
		2-Wire Voice Grade Port (Centrex 800 termination)			UEP9D	UEPQB	1.23	40.31	19.84	24.90	6.58						
		2-Wire Voice Grade Port (Centrex / EBS-PSET)4			UEP9D	UEPQC	1.23	40.31	19.84	24.90	6.58						
		2-Wire Voice Grade Port (Centrex / EBS-M5009)4			UEP9D	UEPQD	1.23	40.31	19.84	24.90	6.58						
		2-Wire Voice Grade Port (Centrex / EBS-M5209)4			UEP9D	UEPQE	1.23	40.31	19.84	24.90	6.58						
		2-Wire Voice Grade Port (Centrex / EBS-M5112)4			UEP9D	UEPQF	1.23	40.31	19.84	24.90	6.58						
		2-Wire Voice Grade Port (Centrex / EBS-M5312)4			UEP9D	UEPQG	1.23	40.31	19.84	24.90	6.58						
		2-Wire Voice Grade Port (Centrex / EBS-M5008)4			UEP9D	UEPQT	1.23	40.31	19.84	24.90	6.58						
		2-Wire Voice Grade Port (Centrex / EBS-M5208)4			UEP9D	UEPQU	1.23	40.31	19.84	24.90	6.58						
		2-Wire Voice Grade Port (Centrex / EBS-M5216)4			UEP9D	UEPQV	1.23	40.31	19.84	24.90	6.58						
		2-Wire Voice Grade Port (Centrex / EBS-M5316)4			UEP9D	UEPQ3	1.23	40.31	19.84	24.90	6.58						
		2-Wire Voice Grade Port (Centrex with Caller ID)			UEP9D	UEPQH	1.23	40.31	19.84	24.90	6.58						
		2-Wire Voice Grade Port (Centrex/Caller ID/Msg Wtg Lamp Indication)4			UEP9D	UEPQW	1.23	40.31	19.84	24.90	6.58						
		2-Wire Voice Grade Port (Centrex/Msg Wtg Lamp Indication)4			UEP9D	UEPQJ	1.23	40.31	19.84	24.90	6.58						
		2-Wire Voice Grade Port (Centrex from diff Serving Wire Center) 2,3			UEP9D	UEPQM	1.23	108.35	70.57	54.24	11.70						
		2-Wire Voice Grade Port (Centrex/differ SWC /EBS-PSET)2,3,4			UEP9D	UEPQO	1.23	108.35	70.57	54.24	11.70						
		2-Wire Voice Grade Port (Centrex/differ SWC /EBS-M5009)2,3,4			UEP9D	UEPQP	1.23	108.35	70.57	54.24	11.70						
		2-Wire Voice Grade Port (Centrex/differ SWC /EBS-5209)2,3,4			UEP9D	UEPQQ	1.23	108.35	70.57	54.24	11.70						
		2-Wire Voice Grade Port (Centrex/differ SWC /EBS-M5112)2,3,4			UEP9D	UEPQR	1.23	108.35	70.57	54.24	11.70						
		2-Wire Voice Grade Port (Centrex/differ SWC /EBS-M5312)2,3,4			UEP9D	UEPQS	1.23	108.35	70.57	54.24	11.70						
		2-Wire Voice Grade Port (Centrex/differ SWC /EBS-M5008)2,3,4			UEP9D	UEPQ4	1.23	108.35	70.57	54.24	11.70						
		2-Wire Voice Grade Port (Centrex/differ SWC /EBS-M5208)2,3,4			UEP9D	UEPQ5	1.23	108.35	70.57	54.24	11.70						
		2-Wire Voice Grade Port (Centrex/differ SWC /EBS-M5216)2,3,4			UEP9D	UEPQ6	1.23	108.35	70.57	54.24	11.70						
		2-Wire Voice Grade Port (Centrex/differ SWC /EBS-M5316)2,3,4			UEP9D	UEPQ7	1.23	108.35	70.57	54.24	11.70						
		2-Wire Voice Grade Port, Diff Serving Wire Center - 800 Service Term 2,3			UEP9D	UEPQZ	1.23	108.35	70.57	54.24	11.70						
		2-Wire Voice Grade Port terminated in on Megalink or equivalent			UEP9D	UEPQ9	1.23	40.31	19.84	24.90	6.58						
		2-Wire Voice Grade Port Terminated on 800 Service Term			UEP9D	UEPQ2	1.23	40.31	19.84	24.90	6.58						
	Local Switching																
		Centrex Intercom Funtionality, per port			UEP9D	URECS	0.7947										
	Local Number Portability																
		Local Number Portability (1 per port)			UEP9D	LNPCC	0.35										

UNBUNDLED NETWORK ELEMENTS - Mississippi														Attachment: 2		Exhibit: A	
CATEGORY		RATE ELEMENTS	Interim	Zone	BCS	USOC	RATES ($)					Svc Order Submitted Elec per LSR	Svc Order Submitted Manually per LSR	Incremental Charge - Manual Svc Order vs. Electronic-1st	Incremental Charge - Manual Svc Order vs. Electronic-Add'l	Incremental Charge - Manual Svc Order vs. Electronic-Disc 1st	Incremental Charge - Manual Svc Order vs. Electronic-Disc Add'l
							Rec	Nonrecurring		Nonrecurring Disconnect		OSS Rates ($)					
								First	Add'l	First	Add'l	SOMEC	SOMAN	SOMAN	SOMAN	SOMAN	SOMAN
	Features																
		All Standard Features Offered, per port			UEP9D	UEPVF	2.56										
		All Select Features Offered, per port			UEP9D	UEPVS	0.00	404.98									
		All Centrex Control Features Offered, per port			UEP9D	UEPVC	2.56										
	NARS																
		Unbundled Network Access Register - Combination			UEP9D	UARCX	0.00	0.00	0.00	0.00	0.00						
		Unbundled Network Access Register - Inward			UEP9D	UAR1X	0.00	0.00	0.00	0.00	0.00						
		Unbundled Network Access Register - Outdial			UEP9D	UAROX	0.00	0.00	0.00	0.00	0.00						
	Miscellaneous Terminations																
	2-Wire Trunk Side																
		Trunk Side Terminations, each			UEP9D	CEND6	8.25	120.00	18.85	61.77	3.88						
	4-Wire Digital (1.544 Megabits)																
		DS1 Circuit Terminations, each			UEP9D	M1HD1	58.41	203.19	96.25	74.86	2.54						
		DS0 Channels Activiated per Channel			UEP9D	M1HDO	0.00	14.56									
	Interoffice Channel Mileage - 2-Wire																
		Interoffice Channel Facilities Termination			UEP9D	M1GBC	22.52	40.77	27.57	17.26	7.11						
		Interoffice Channel mileage, per mile or fraction of mile			UEP9D	M1GBM	0.0098										
	Feature Activations (DS0) Centrex Loops on Channelized DS1 Service																
	D4 Channel Bank Feature Activations																
		Feature Activation on D-4 Channel Bank Centrex Loop Slot			UEP9D	1PQWS	0.57										
		Feature Activation on D-4 Channel Bank FX line Side Loop Slot			UEP9D	1PQW6	0.57										
		Feature Activation on D-4 Channel Bank FX Trunk Side Loop Slot			UEP9D	1PQW7	0.57										
		Feature Activation on D-4 Channel Bank Centrex Loop Slot - Different Wire Center			UEP9D	1PQWP	0.57										
		Feature Activation on D-4 Channel Bank Private Line Loop Slot			UEP9D	1PQWV	0.57										
		Feature Activation on D-4 Channel Bank Tjie Line/Trunk Loop Slot			UEP9D	1PQWQ	0.57										
		Feature Activation on D-4 Channel Bank WATS Loop Slot			UEP9D	1PQWA	0.57										
	Non-Recurring Charges (NRC) Associated with UNE-P Centrex																
		NRC Conversion Currently Combined Switch-As-Is with allowed changes, per port			UEP9D	USAC2		0.10	0.10								
		Conversion of existing Centrex Common Block, each			UEP9D	USACN		37.97	16.68								
		New Centrex Standard Common Block			UEP9D	M1ACS	0.00	666.32									
		New Centrex Customized Common Block			UEP9D	M1ACC	0.00	666.32									
		NAR Establishment Charge, Per Occasion			UEP9D	URECA	0.00	72.63									
	Additional Non-Recurring Charges (NRC)																
		Unbundled Miscellaneous Rate Element, Tag Loop at End Use Premise			UEP9D	URETL		8.33	0.83								
		Unbundled Miscellaneous Rate Element, Tag Design Loop at End Use Premise			UEP9D	URETN		11.19	1.10								
	UNE-P CENTREX - EWSD (Valid in AL, FL, KY, LA, MS & TN)																
	2-Wire VG Loop/2-Wire Voice Grade Port (Centrex) Combo																
	UNE Port/Loop Combination Rates (Non-Design)																
		2-Wire VG Loop/2-Wire Voice Grade Port (Centrex) Port Combo - Non-Design		1	UEP9E		12.22										
		2-Wire VG Loop/2-Wire Voice Grade Port (Centrex)Port Combo - Non-Design		2	UEP9E		17.13										
		2-Wire VG Loop/2-Wire Voice Grade Port (Centrex)Port Combo - Non-Design		3	UEP9E		26.26										
		2-Wire VG Loop/2-Wire Voice Grade Port (Centrex) Port Combo - Non-Design		4	UEP9E		44.91										
	UNE Port/Loop Combination Rates (Design)																
		2-Wire VG Loop/2-Wire Voice Grade Port (Centrex) Port Combo - Design		1	UEP9E		15.12										
		2-Wire VG Loop/2-Wire Voice Grade Port (Centrex)Port Combo - Design		2	UEP9E		19.98										

UNBUNDLED NETWORK ELEMENTS - Mississippi														Attachment: 2		Exhibit: A	
CATEGORY	RATE ELEMENTS	Interim	Zone	BCS	USOC	RATES ($)					Svc Order Submitted Elec per LSR	Svc Order Submitted Manually per LSR	Incremental Charge - Manual Svc Order vs. Electronic-1st	Incremental Charge - Manual Svc Order vs. Electronic-Add'l	Incremental Charge - Manual Svc Order vs. Electronic-Disc 1st	Incremental Charge - Manual Svc Order vs. Electronic-Disc Add'l
						Rec	Nonrecurring		Nonrecurring Disconnect		OSS Rates ($)					
							First	Add'l	First	Add'l	SOMEC	SOMAN	SOMAN	SOMAN	SOMAN	SOMAN
	2-Wire VG Loop/2-Wire Voice Grade Port (Centrex)Port Combo - Design		3	UEP9E		28.78										
	2-Wire VG Loop/2-Wire Voice Grade Port (Centrex) Port Combo - Design		4	UEP9E		46.95										
UNE Loop Rate																
	2-Wire Voice Grade Loop (SL 1) - Zone 1		1	UEP9E	UECS1	10.98										
	2-Wire Voice Grade Loop (SL 1) - Zone 2		2	UEP9E	UECS1	15.91										
	2-Wire Voice Grade Loop (SL 1) - Zone 3		3	UEP9E	UECS1	25.04										
	2-Wire Voice Grade Loop (SL 1) - Zone 4		4	UEP9E	UECS1	43.68										
	2-Wire Voice Grade Loop (SL 2) - Zone 1		1	UEP9E	UECS2	13.89										
	2-Wire Voice Grade Loop (SL 2) - Zone 2		2	UEP9E	UECS2	18.75										
	2-Wire Voice Grade Loop (SL 2) - Zone 3		3	UEP9E	UECS2	27.55										
	2-Wire Voice Grade Loop (SL 2) - Zone 4		4	UEP9E	UECS2	45.72										
UNE Port Rate																
AL, FL, KY, LA, MS, & TN only																
	2-Wire Voice Grade Port (Centrex) Basic Local Area			UEP9E	UEPYA	1.23	40.31	19.84	24.90	6.58						
	2-Wire Voice Grade Port (Centrex 800 termination)Basic Local Area			UEP9E	UEPYB	1.23	40.31	19.84	24.90	6.58						
	2-Wire Voice Grade Port (Centrex with Caller ID)1Basic Local Area			UEP9E	UEPYH	1.23	40.31	19.84	24.90	6.58						
	2-Wire Voice Grade Port (Centrex from diff Serving Wire Center)2,3 Basic Local Area			UEP9E	UEPYM	1.23	108.35	70.57	54.24	11.70						
	2-Wire Voice Grade Port, Diff Serving Wire Center 2,3 - 800 Service Term - Basic Local Area			UEP9E	UEPYZ	1.23	108.35	70.57	54.24	11.70						
	2-Wire Voice Grade Port terminated in on Megalink or equivalent - Basic Local Area			UEP9E	UEPY9	1.23	40.31	19.84	24.90	6.58						
	2-Wire Voice Grade Port Terminated on 800 Service Term - Basic Local Area			UEP9E	UEPY2	1.23	40.31	19.84	24.90	6.58						
AL, KY, LA, MS, & TN Only																
	2-Wire Voice Grade Port (Centrex)			UEP9E	UEPQA	1.23	40.31	19.84	24.90	6.58						
	2-Wire Voice Grade Port (Centrex 800 termination)			UEP9E	UEPQB	1.23	40.31	19.84	24.90	6.58						
	2-Wire Voice Grade Port (Centrex with Caller ID)1			UEP9E	UEPQH	1.23	40.31	19.84	24.90	6.58						
	2-Wire Voice Grade Port (Centrex from diff Serving Wire Center)2,3			UEP9E	UEPQM	1.23	108.35	70.57	54.24	11.70						
	2-Wire Voice Grade Port, Diff Serving Wire Center 2,3 - 800 Service Term			UEP9E	UEPQZ	1.23	108.35	70.57	54.24	11.70						
	2-Wire Voice Grade Port terminated in on Megalink or equivalent			UEP9E	UEPQ9	1.23	40.31	19.84	24.90	6.58						
	2-Wire Voice Grade Port Terminated on 800 Service Term			UEP9E	UEPQ2	1.23	40.31	19.84	24.90	6.58						
Local Switching																
	Centrex Intercom Funtionality, per port			UEP9E	URECS	0.7947										
Local Number Portability																
	Local Number Portability (1 per port)			UEP9E	LNPCC	0.35										
Features																
	All Standard Features Offered, per port			UEP9E	UEPVF	2.56										
	All Select Features Offered, per port			UEP9E	UEPVS	0.00	404.98									
	All Centrex Control Features Offered, per port			UEP9E	UEPVC	2.56										
NARS																
	Unbundled Network Access Register - Combination			UEP9E	UARCX	0.00	0.00	0.00	0.00	0.00						
	Unbundled Network Access Register - Indial			UEP9E	UAR1X	0.00	0.00	0.00	0.00	0.00						
	Unbundled Network Access Register - Outdial			UEP9E	UAROX	0.00	0.00	0.00	0.00	0.00						
Miscellaneous Terminations																
2-Wire Trunk Side																
	Trunk Side Terminations, each			UEP9E	CEND6	8.25	120.00	18.85	61.77	3.88						
4-Wire Digital (1.544 Megabits)																
	DS1 Circuit Terminations, each			UEP9E	M1HD1	58.41	203.19	96.25	74.86	2.54						
	DS0 Channel Activated Per Channel			UEP9E	M1HDO	0.00	14.56									
Interoffice Channel Mileage - 2-Wire																
	Interoffice Channel Facilities Termination			UEP9E	M1GBC	22.52	40.77	27.57	17.26	7.11						

UNBUNDLED NETWORK ELEMENTS - Mississippi														Attachment: 2		Exhibit: A	
CATEGORY	RATE ELEMENTS	Interim	Zone	BCS	USOC	RATES ($)					Svc Order Submitted Elec per LSR	Svc Order Submitted Manually per LSR	Incremental Charge - Manual Svc Order vs. Electronic-1st	Incremental Charge - Manual Svc Order vs. Electronic-Add'l	Incremental Charge - Manual Svc Order vs. Electronic-Disc 1st	Incremental Charge - Manual Svc Order vs. Electronic-Disc Add'l
						Rec	Nonrecurring		Nonrecurring Disconnect		OSS Rates ($)					
							First	Add'l	First	Add'l	SOMEC	SOMAN	SOMAN	SOMAN	SOMAN	SOMAN
	Interoffice Channel mileage, per mile or fraction of mile			UEP9E	M1GBM	0.0098										
Feature Activations (DS0) Centrex Loops on Channelized DS1 Service																
D4 Channel Bank Feature Activations																
	Feature Activation on D-4 Channel Bank Centrex Loop Slot			UEP9E	1PQWS	0.57										
	Feature Activation on D-4 Channel Bank FX line Side Loop Slot			UEP9E	1PQW6	0.57										
	Feature Activation on D-4 Channel Bank FX Trunk Side Loop Slot			UEP9E	1PQW7	0.57										
	Feature Activation on D-4 Channel Bank Centrex Loop Slot - Different Wire Center			UEP9E	1PQWP	0.57										
	Feature Activation on D-4 Channel Bank Private Line Loop Slot			UEP9E	1PQWV	0.57										
	Feature Activation on D-4 Channel Bank Tjie Line/Trunk Loop Slot			UEP9E	1PQWQ	0.57										
	Feature Activation on D-4 Channel Bank WATS Loop Slot			UEP9E	1PQWA	0.57										
Non-Recurring Charges (NRC) Associated with UNE-P Centrex																
	NRC Conversion Currently Combined Switch-As-Is with allowed changes, per port			UEP9E	USAC2		0.10	0.10								
	Conversion of Existing Centrex Common Block, each			UEP9E	USACN		37.97	16.68								
	New Centrex Standard Common Block			UEP9E	M1ACS	0.00	666.32									
	New Centrex Customized Common Block			UEP9E	M1ACC	0.00	666.32									
	NAR Establishment Charge, Per Occasion			UEP9E	URECA	0.00	72.63									
Additional Non-Recurring Charges (NRC)																
	Unbundled Miscellaneous Rate Element, Tag Loop at End Use Premise			UEP9E	URETL		8.33	0.83								
	Unbundled Miscellaneous Rate Element, Tag Design Loop at End Use Premise			UEP9E	URETN		11.19	1.10								
UNE-P CENTREX - DCO - Valid in AL, KY, LA, MS, & TN)																
2-Wire VG Loop/2-Wire Voice Grade Port (Centrex) Combo																
UNE Port/Loop Combination Rates (Non-Design)																
	2-Wire VG Loop/2-Wire Voice Grade Port (Centrex) Port Combo - Non-Design		1	UEP93		12.22										
	2-Wire VG Loop/2-Wire Voice Grade Port (Centrex)Port Combo - Non-Design		2	UEP93		17.13										
	2-Wire VG Loop/2-Wire Voice Grade Port (Centrex)Port Combo - Non-Design		3	UEP93		26.26										
	2-Wire VG Loop/2-Wire Voice Grade Port (Centrex) Port Combo - Non-Design		4	UEP93		44.91										
UNE Port/Loop Combination Rates (Design)																
	2-Wire VG Loop/2-Wire Voice Grade Port (Centrex) Port Combo - Design		1	UEP93		15.12										
	2-Wire VG Loop/2-Wire Voice Grade Port (Centrex)Port Combo - Design		2	UEP93		19.98										
	2-Wire VG Loop/2-Wire Voice Grade Port (Centrex)Port Combo - Design		3	UEP93		28.78										
	2-Wire VG Loop/2-Wire Voice Grade Port (Centrex) Port Combo - Design		4	UEP93		46.95										
UNE Loop Rate																
	2-Wire Voice Grade Loop (SL 1) - Zone 1		1	UEP93	UECS1	10.98										
	2-Wire Voice Grade Loop (SL 1) - Zone 2		2	UEP93	UECS1	15.91										
	2-Wire Voice Grade Loop (SL 1) - Zone 3		3	UEP93	UECS1	25.04										
	2-Wire Voice Grade Loop (SL 1) - Zone 4		4	UEP93	UECS1	43.68										
	2-Wire Voice Grade Loop (SL 2) - Zone 1		1	UEP93	UECS2	13.89										
	2-Wire Voice Grade Loop (SL 2) - Zone 2		2	UEP93	UECS2	18.75										
	2-Wire Voice Grade Loop (SL 2) - Zone 3		3	UEP93	UECS2	27.55										
	2-Wire Voice Grade Loop (SL 2) - Zone 4		4	UEP93	UECS2	45.72										
UNE Port Rate																
AL, KY, LA, MS, & TN only																
	2-Wire Voice Grade Port (Centrex) Basic Local Area			UEP93	UEPYA	1.23	40.31	19.84	24.90	6.58						

UNBUNDLED NETWORK ELEMENTS - Mississippi														Attachment: 2		Exhibit: A	
CATEGORY		RATE ELEMENTS	Interim	Zone	BCS	USOC	RATES ($)					Svc Order Submitted Elec per LSR	Svc Order Submitted Manually per LSR	Incremental Charge - Manual Svc Order vs. Electronic-1st	Incremental Charge - Manual Svc Order vs. Electronic-Add'l	Incremental Charge - Manual Svc Order vs. Electronic-Disc 1st	Incremental Charge - Manual Svc Order vs. Electronic-Disc Add'l
							Rec	Nonrecurring		Nonrecurring Disconnect		OSS Rates ($)					
								First	Add'l	First	Add'l	SOMEC	SOMAN	SOMAN	SOMAN	SOMAN	SOMAN
		2-Wire Voice Grade Port (Centrex 800 termination)Basic Local Area			UEP93	UEPYB	1.23	40.31	19.84	24.90	6.58						
		2-Wire Voice Grade Port (Centrex with Caller ID)1Basic Local Area			UEP93	UEPYH	1.23	40.31	19.84	24.90	6.58						
		2-Wire Voice Grade Port (Centrex from diff Serving Wire Center)2,3 Basic Local Area			UEP93	UEPYM	1.23	108.35	70.57	54.24	11.70						
		2-Wire Voice Grade Port, Diff Serving Wire Center - 2,3 - 800 Service Term - Basic Local Area			UEP93	UEPYZ	1.23	108.35	70.57	54.24	11.70						
		2-Wire Voice Grade Port terminated in on Megalink or equivalent - Basic Local Area			UEP93	UEPY9	1.23	40.31	19.84	24.90	6.58						
		2-Wire Voice Grade Port Terminated on 800 Service Term - Basic Local Area			UEP93	UEPY2	1.23	40.31	19.84	24.90	6.58						
		2-Wire Voice Grade Port (Centrex)			UEP93	UEPQA	1.23	40.31	19.84	24.90	6.58						
		2-Wire Voice Grade Port (Centrex 800 termination)			UEP93	UEPQB	1.23	40.31	19.84	24.90	6.58						
		2-Wire Voice Grade Port (Centrex with Caller ID)1			UEP93	UEPQH	1.23	40.31	19.84	24.90	6.58						
		2-Wire Voice Grade Port (Centrex from diff Serving Wire Center)2,3			UEP93	UEPQM	1.23	108.35	70.57	54.24	11.70						
		2-Wire Voice Grade Port, Diff Serving Wire Center - 2,3 -800 Service Term			UEP93	UEPQZ	1.23	108.35	70.57	54.24	11.70						
		2-Wire Voice Grade Port terminated in on Megalink or equivalent			UEP93	UEPQ9	1.23	40.31	19.84	24.90	6.58						
		2-Wire Voice Grade Port Terminated on 800 Service Term			UEP93	UEPQ2	1.23	40.31	19.84	24.90	6.58						
	Local Switching																
		Centrex Intercom Funtionality, per port			UEP93	URECS	0.7947										
	Local Number Portability																
		Local Number Portability (1 per port)			UEP93	LNPCC	0.35										
	Features																
		All Standard Features Offered, per port			UEP93	UEPVF	2.56										
		All Centrex Control Features Offered, per port			UEP93	UEPVC	2.56										
	NARS																
		Unbundled Network Access Register - Combination			UEP93	UARCX	0.00	0.00	0.00	0.00	0.00						
		Unbundled Network Access Register - Indial			UEP93	UAR1X	0.00	0.00	0.00	0.00	0.00						
		Unbundled Network Access Register - Outdial			UEP93	UAROX	0.00	0.00	0.00	0.00	0.00						
	Miscellaneous Terminations																
	2-Wire Trunk Side																
		Trunk Side Terminations, each			UEP93	CEND6	8.25	120.00	18.85	61.77	3.88						
	4-Wire Digital (1.544 Megabits)																
		DS1 Circuit Terminations, each			UEP93	M1HD1	58.41	203.19	96.25	74.86	2.54						
		DS0 Channels Activated, Per Channel			UEP93	M1HDO	0.00	14.56									
	Interoffice Channel Mileage - 2-Wire																
		Interoffice Channel Facilities Termination			UEP93	M1GBC	22.52	40.77	27.57	17.26	7.11						
		Interoffice Channel mileage, per mile or fraction of mile			UEP93	M1GBM	0.0098										
	Feature Activations (DS0) Centrex Loops on Channelized DS1 Service																
	D4 Channel Bank Feature Activations																
		Feature Activation on D-4 Channel Bank Centrex Loop Slot			UEP93	1PQWS	0.57										
		Feature Activation on D-4 Channel Bank FX Line Side Loop Slot			UEP93	1PQW6	0.57										
		Feature Activation on D-4 Channel Bank FX Trunk Side Loop Slot			UEP93	1PQW7	0.57										
		Feature Activation on D-4 Channel Bank Centrex Loop Slot - Different Wire Center			UEP93	1PQWP	0.57										
		Feature Activation on D-4 Channel Bank Private Line Loop Slot			UEP93	1PQWV	0.57										
		Feature Activation on D-4 Channel Bank Tie Line/Trunk Loop Slot			UEP93	1PQWQ	0.57										
		Feature Activation on D-4 Channel Bank WATS Loop Slot			UEP93	1PQWA	0.57										
	Non-Recurring Charges (NRC) Associated with UNE-P Centrex																
		NRC Conversion Currently Combined Switch-As-Is with allowed changes, per port			UEP93	USAC2		0.10	0.10								

UNBUNDLED NETWORK ELEMENTS - Mississippi														Attachment: 2		Exhibit: A	
CATEGORY		RATE ELEMENTS	Interim	Zone	BCS	USOC	RATES ($)					Svc Order Submitted Elec per LSR	Svc Order Submitted Manually per LSR	Incremental Charge - Manual Svc Order vs. Electronic-1st	Incremental Charge - Manual Svc Order vs. Electronic-Add'l	Incremental Charge - Manual Svc Order vs. Electronic-Disc 1st	Incremental Charge - Manual Svc Order vs. Electronic-Disc Add'l
							Rec	Nonrecurring		Nonrecurring Disconnect		OSS Rates ($)					
								First	Add'l	First	Add'l	SOMEC	SOMAN	SOMAN	SOMAN	SOMAN	SOMAN
		Conversion of Existing Centrex Common Block, each			UEP93	USACN		37.97	16.68								
		New Centrex Standard Common Block			UEP93	M1ACS	0.00	666.32									
		New Centrex Customized Common Block			UEP93	M1ACC	0.00	666.32									
		NAR Establishment Charge, Per Occasion			UEP93	URECA	0.00	72.63									
	Additional Non-Recurring Charges (NRC)																
		Unbundled Miscellaneous Rate Element, Tag Loop at End Use Premise			UEP93	URETL		8.33	0.83								
		Unbundled Miscellaneous Rate Element, Tag Design Loop at End Use Premise			UEP93	URETN		11.19	1.10								
	Note 1 - Required Port for Centrex Control in 1AESS, 5ESS & EWSD																
	Note 2 - Requres Interoffice Channel Mileage																
	Note 3 - Installation is combination of Installation charge for SL2 Loop and Port																
	Note 4 - Requires Specific Customer Premises Equipment																
	Note: Rates displaying an "R" in Interim column are interim and subject to rate true-up as set forth in General Terms and Conditions.																

UNBUNDLED NETWORK ELEMENTS - North Carolina														Attachment: 2		Exhibit: A	
CATEGORY	RATE ELEMENTS	Interim	Zone	BCS	USOC	RATES ($)					Svc Order Submitted Elec per LSR	Svc Order Submitted Manually per LSR	Incremental Charge - Manual Svc Order vs. Electronic-1st	Incremental Charge - Manual Svc Order vs. Electronic-Add'l	Incremental Charge - Manual Svc Order vs. Electronic-Disc 1st	Incremental Charge - Manual Svc Order vs. Electronic-Disc Add'l
						Rec	Nonrecurring		Nonrecurring Disconnect		OSS Rates ($)					
							First	Add'l	First	Add'l	SOMEC	SOMAN	SOMAN	SOMAN	SOMAN	SOMAN
	The "Zone" shown in the sections for stand-alone loops or loops as part of a combination refers to Geographically Deaveraged UNE Zones. To view Geographically Deaveraged UNE Zone Designations by Central Office, refer to internet Website: http://www.interconnection.bellsouth.com/become_a_clec/html/interconnection.htm															
OPERATIONAL SUPPORT SYSTEMS (OSS) - "REGIONAL RATES"																
	NOTE: (1) CLEC should contact its contract negotiator if it prefers the "state specific" OSS charges as ordered by the State Commissions. The OSS charges currently contained in this rate exhibit are the BellSouth "regional" service ordering charges. CLEC may elect either the state specific Commission ordered rates for the service ordering charges, or CLEC may elect the regional service ordering charge, however, CLEC can not obtain a mixture of the two regardless if CLEC has a interconnection contract established in each of the 9 states.															
	NOTE: (2) Any element that can be ordered electronically will be billed according to the SOMEC rate listed in this category. Please refer to BellSouth's Local Ordering Handbook (LOH) to determine if a product can be ordered electronically. For those elements that cannot be ordered electronically at present per the LOH, the listed SOMEC rate in this category reflects the charge that would be billed to a CLEC once electronic ordering capabilities come on-line for that element. Otherwise, the manual ordering charge, SOMAN, will be applied to a CLECs bill when it submits an LSR to BellSouth.															
	NOTE: (3) OSS - Manual Service Order Charge, Per Element - UNE Only **Please see applicable rate element for SOMAN charge**															
	OSS - Electronic Service Order Charge, Per Local Service Request (LSR) - UNE Only				SOMEC		3.50	0.00	3.50	0.00						
UNE SERVICE DATE ADVANCEMENT CHARGE																
	NOTE: The Expedite charge will be maintained commensurate with BellSouth's FCC No.1 Tariff, Section 5 as applicable.															
	UNE Expedite Charge per Circuit or Line Assignable USOC, per Day			UAL, UEANL, UCL, UEF, UDF, UEQ, UDL, UENTW, UDN, UEA, UHL, ULC, USL, U1T12, U1T48, U1TD1, U1TD3, U1TDX, U1TO3, U1TS1, U1TVX, UC1BC, UC1BL, UC1CC, UC1CL, UC1DC, UC1DL, UC1EC, UC1EL, UC1FC, UC1FL, UC1GC, UC1GL, UC1HC, UC1HL, UDL12, UDL48, UDLO3, UDLSX, UE3, ULD12, ULD48, ULDD1, ULDD3, ULDDX, ULDO3, ULDS1, ULDVX, UNC1X, UNC3X, UNCDX, UNCNX, UNCSX, UNCVX, UNLD1, UNLD3, UXTD1, UXTD3, UXTS1, U1TUC, U1TUD, U1TUB, U1TUA	SDASP		200.00									
UNBUNDLED EXCHANGE ACCESS LOOP																
	2-WIRE ANALOG VOICE GRADE LOOP															
	2-Wire Analog Voice Grade Loop - Service Level 1- Zone 1		1	UEANL	UEAL2	12.11	57.99	42.37					26.94	12.76	0.00	0.00
	2-Wire Analog Voice Grade Loop - Service Level 1- Zone 2		2	UEANL	UEAL2	21.24	57.99	42.37					26.94	12.76	0.00	0.00
	2-Wire Analog Voice Grade Loop - Service Level 1- Zone 3		3	UEANL	UEAL2	33.65	57.99	42.37					26.94	12.76	0.00	0.00
	2-Wire Analog Voice Grade Loop - Service Level 1- Zone 1		1	UEANL	UEASL	12.11	57.99	42.37					26.94	12.76	0.00	0.00
	2-Wire Analog Voice Grade Loop - Service Level 1- Zone 2		2	UEANL	UEASL	21.24	57.99	42.37					26.94	12.76	0.00	0.00
	2-Wire Analog Voice Grade Loop - Service Level 1- Zone 3		3	UEANL	UEASL	33.65	57.99	42.37					26.94	12.76	0.00	0.00
	Unbundled Miscellaneous Rate Element, Tag Loop at End User Premise			UEANL	URETL		8.33	0.83					26.94	12.76	0.00	0.00
	Loop Testing - Basic 1st Half Hour			UEANL	URET1		76.24	76.24					26.94	12.76	0.00	0.00
	Loop Testing - Basic Additional Half Hour			UEANL	URETA		39.51	39.51					26.94	12.76	0.00	0.00
	CLEC to CLEC Conversion Charge Without Outside Dispatch (UVL-SL1)			UEANL	UREWO		15.76	8.93					26.94	12.76	0.00	0.00

UNBUNDLED NETWORK ELEMENTS - North Carolina														Attachment: 2		Exhibit: A	
CATEGORY	RATE ELEMENTS	Interim	Zone	BCS	USOC	RATES ($)					Svc Order Submitted Elec per LSR	Svc Order Submitted Manually per LSR	Incremental Charge - Manual Svc Order vs. Electronic-1st	Incremental Charge - Manual Svc Order vs. Electronic-Add'l	Incremental Charge - Manual Svc Order vs. Electronic-Disc 1st	Incremental Charge - Manual Svc Order vs. Electronic-Disc Add'l
						Rec	Nonrecurring		Nonrecurring Disconnect		OSS Rates ($)					
							First	Add'l	First	Add'l	SOMEC	SOMAN	SOMAN	SOMAN	SOMAN	SOMAN
	Unbundled Voice Loop, Non-Design Voice Loop, billing for BST providing make-up (Engineering Information - E.I.)			UEANL	UEANM		28.74	28.74								
	Manual Order Coordination for UVL-SL1s (per loop)			UEANL	UEAMC		61.38	61.38								
	Order Coordination for Specified Conversion Time for UVL-SL1 (per LSR)			UEANL	OCOSL		45.34	45.34								
2-WIRE Unbundled COPPER LOOP																
	2-Wire Unbundled Copper Loop - Non-Designed Zone 1		1	UEQ	UEQ2X	10.16	35.27	15.60					26.94	12.76	0.00	0.00
	2 Wire Unbundled Copper Loop - Non-Designed - Zone 2		2	UEQ	UEQ2X	17.55	35.27	15.60					26.94	12.76	0.00	0.00
	2 Wire Unbundled Copper Loop - Non-Designed - Zone 3		3	UEQ	UEQ2X	27.58	35.27	15.60					26.94	12.76	0.00	0.00
	Unbundled Miscellaneous Rate Element, Tag Loop at End User Premise			UEQ	URETL		8.33	0.83					26.94	12.76	0.00	0.00
	Manual Order Coordination 2 Wire Unbundled Copper Loop - Non-Designed (per loop)			UEQ	USBMC		61.38	61.38								
	Unbundled Copper Loop, Non-Design Copper Loop, billing for BST providing make-up (Engineering Information - E.I.)			UEQ	UEQMU		28.74	28.74					26.94	12.76	0.00	0.00
	Loop Testing - Basic 1st Half Hour			UEQ	URET1		76.24	76.24					26.94	12.76	0.00	0.00
	Loop Testing - Basic Additional Half Hour			UEQ	URETA		39.51	39.51					26.94	12.76	0.00	0.00
	CLEC to CLEC Conversion Charge Without Outside Dispatch (UCL-ND)			UEQ	UREWO		14.26	7.42					26.94	12.76	0.00	0.00
UNBUNDLED EXCHANGE ACCESS LOOP																
2-WIRE ANALOG VOICE GRADE LOOP																
	2 Wire Analog Voice Grade Loop-Service Level 1-Line Splitting-Zone 1		1	UEPSR UEPSB	UEALS	12.11	57.99	42.37	0.00	0.00			26.94	12.76		
	2 Wire Analog Voice Grade Loop-Service Level 1-Line Splitting-Zone 1		1	UEPSR UEPSB	UEABS	12.11	57.99	42.37	0.00	0.00			26.94	12.76		
	2 Wire Analog Voice Grade Loop- Service Level 1-Line Splitting-Zone 2		2	UEPSR UEPSB	UEALS	21.24	57.99	42.37	0.00	0.00			26.94	12.76		
	2 Wire Analog Voice Grade Loop- Service Level 1-Line Splitting-Zone 2		2	UEPSR UEPSB	UEABS	21.24	57.99	42.37	0.00	0.00			26.94	12.76		
	2 Wire Analog Voice Grade Loop-Service Level 1-Line Splitting-Zone 3		3	UEPSR UEPSB	UEALS	33.65	57.99	42.37	0.00	0.00			26.94	12.76		
	2 Wire Analog Voice Grade Loop-Service Level 1-Line Splitting-Zone 3		3	UEPSR UEPSB	UEABS	33.65	57.99	42.37	0.00	0.00			26.94	12.76		
UNBUNDLED EXCHANGE ACCESS LOOP																
2-WIRE ANALOG VOICE GRADE LOOP																
	2-Wire Analog Voice Grade Loop - Service Level 2 w/Loop or Ground Start Signaling - Zone 1		1	UEA	UEAL2	14.97	142.97	106.56					26.94	12.76	0.00	0.00
	2-Wire Analog Voice Grade Loop - Service Level 2 w/Loop or Ground Start Signaling - Zone 2		2	UEA	UEAL2	25.93	142.97	106.56					26.94	12.76	0.00	0.00
	2-Wire Analog Voice Grade Loop - Service Level 2 w/Loop or Ground Start Signaling - Zone 3		3	UEA	UEAL2	40.81	142.97	106.56					26.94	12.76	0.00	0.00
	Order Coordination for Specified Conversion Time (per LSR)			UEA	OCOSL		45.34									
	2-Wire Analog Voice Grade Loop - Service Level 2 w/Reverse Battery Signaling - Zone 1		1	UEA	UEAR2	14.97	142.97	106.56					26.94	12.76	0.00	0.00
	2-Wire Analog Voice Grade Loop - Service Level 2 w/Reverse Battery Signaling - Zone 2		2	UEA	UEAR2	25.93	142.97	106.56					26.94	12.76	0.00	0.00
	2-Wire Analog Voice Grade Loop - Service Level 2 w/Reverse Battery Signaling - Zone 3		3	UEA	UEAR2	40.81	142.97	106.56					26.94	12.76	0.00	0.00
	Order Coordination for Specified Conversion Time (per LSR)			UEA	OCOSL		45.34									
	CLEC to CLEC Conversion Charge without outside dispatch			UEA	UREWO		87.64	36.33					26.94	12.76	0.00	0.00
	Loop Tagging - Service Level 2 (SL2)			UEA	URETL		11.20	1.10					26.94	12.76	0.00	0.00
4-WIRE ANALOG VOICE GRADE LOOP																
	4-Wire Analog Voice Grade Loop - Zone 1		1	UEA	UEAL4	21.32	288.47	237.45					26.94	12.76	0.00	0.00
	4-Wire Analog Voice Grade Loop - Zone 2		2	UEA	UEAL4	36.27	288.47	237.45					26.94	12.76	0.00	0.00
	4-Wire Analog Voice Grade Loop - Zone 3		3	UEA	UEAL4	56.57	288.47	237.45					26.94	12.76	0.00	0.00
	Order Coordination for Specified Conversion Time (per LSR)			UEA	OCOSL		45.34									
	CLEC to CLEC Conversion Charge without outside dispatch			UEA	UREWO		87.64	36.33					26.94	12.76	0.00	0.00
2-WIRE ISDN DIGITAL GRADE LOOP																
	2-Wire ISDN Digital Grade Loop - Zone 1		1	UDN	U1L2X	19.42	325.91	251.31					26.94	12.76	0.00	0.00

UNBUNDLED NETWORK ELEMENTS - North Carolina														Attachment: 2		Exhibit: A	
CATEGORY	RATE ELEMENTS	Interim	Zone	BCS	USOC	RATES ($)					Svc Order Submitted Elec per LSR	Svc Order Submitted Manually per LSR	Incremental Charge - Manual Svc Order vs. Electronic-1st	Incremental Charge - Manual Svc Order vs. Electronic-Add'l	Incremental Charge - Manual Svc Order vs. Electronic-Disc 1st	Incremental Charge - Manual Svc Order vs. Electronic-Disc Add'l
						Rec	Nonrecurring		Nonrecurring Disconnect		OSS Rates ($)					
							First	Add'l	First	Add'l	SOMEC	SOMAN	SOMAN	SOMAN	SOMAN	SOMAN
	2-Wire ISDN Digital Grade Loop - Zone 2		2	UDN	U1L2X	32.88	325.91	251.31					26.94	12.76	0.00	0.00
	2-Wire ISDN Digital Grade Loop - Zone 3		3	UDN	U1L2X	51.14	325.91	251.31					26.94	12.76	0.00	0.00
	Order Coordination For Specified Conversion Time (per LSR)			UDN	OCOSL		45.34									
	CLEC to CLEC Conversion Charge without outside dispatch			UDN	UREWO		91.55	44.12					26.94	12.76	0.00	0.00
2-WIRE ASYMMETRICAL DIGITAL SUBSCRIBER LINE (ADSL) COMPATIBLE LOOP																
	2 Wire Unbundled ADSL Loop including manual service inquiry & facility reservation - Zone 1		1	UAL	UAL2X	11.00	264.71	145.60					26.94	12.76	0.00	0.00
	2 Wire Unbundled ADSL Loop including manual service inquiry & facility reservation - Zone 2		2	UAL	UAL2X	18.39	264.71	145.60					26.94	12.76	0.00	0.00
	2 Wire Unbundled ADSL Loop including manual service inquiry & facility reservation - Zone 3		3	UAL	UAL2X	28.42	264.71	145.60					26.94	12.76	0.00	0.00
	Order Coordination for Specified Conversion Time (per LSR)			UAL	OCOSL		45.34									
	2 Wire Unbundled ADSL Loop without manual service inquiry & facility reservaton - Zone 1		1	UAL	UAL2W	11.00	190.25	114.82					26.94	12.76	0.00	0.00
	2 Wire Unbundled ADSL Loop without manual service inquiry & facility reservaton - Zone 2		2	UAL	UAL2W	18.39	190.25	114.82					26.94	12.76	0.00	0.00
	2 Wire Unbundled ADSL Loop without manual service inquiry & facility reservaton - Zone 3		3	UAL	UAL2W	28.42	190.25	114.82					26.94	12.76	0.00	0.00
	Order Coordination for Specified Conversion Time (per LSR)			UAL	OCOSL		45.34									
	CLEC to CLEC Conversion Charge without outside dispatch			UAL	UREWO		86.12	40.36					26.94	12.76	0.00	0.00
2-WIRE HIGH BIT RATE DIGITAL SUBSCRIBER LINE (HDSL) COMPATIBLE LOOP																
	2 Wire Unbundled HDSL Loop including manual service inquiry & facility reservation - Zone 1		1	UHL	UHL2X	9.01	284.74	163.54					26.94	12.76	0.00	0.00
	2 Wire Unbundled HDSL Loop including manual service inquiry & facility reservation - Zone 2		2	UHL	UHL2X	14.87	284.74	163.54					26.94	12.76	0.00	0.00
	2 Wire Unbundled HDSL Loop including manual service inquiry & facility reservation - Zone 3		3	UHL	UHL2X	22.82	284.74	163.54					26.94	12.76	0.00	0.00
	Order Coordination for Specified Conversion Time (per LSR)			UHL	OCOSL		45.34									
	2 Wire Unbundled HDSL Loop without manual service inquiry and facility reservation - Zone 1		1	UHL	UHL2W	9.01	207.48	132.05					26.94	12.76	0.00	0.00
	2 Wire Unbundled HDSL Loop without manual service inquiry and facility reservation - Zone 2		2	UHL	UHL2W	14.87	207.48	132.05					26.94	12.76	0.00	0.00
	2 Wire Unbundled HDSL Loop without manual service inquiry and facility reservation - Zone 3		3	UHL	UHL2W	22.82	207.48	132.05					26.94	12.76	0.00	0.00
	Order Coordination for Specified Conversion Time (per LSR)			UHL	OCOSL		45.34									
	CLEC to CLEC Conversion Charge without outside dispatch			UHL	UREWO		86.06	40.36					26.94	12.76	0.00	0.00
4-WIRE HIGH BIT RATE DIGITAL SUBSCRIBER LINE (HDSL) COMPATIBLE LOOP																
	4 Wire Unbundled HDSL Loop including manual service inquiry and facility reservation - Zone 1		1	UHL	UHL4X	10.62	341.65	220.45					26.94	12.76	0.00	0.00
	4-Wire Unbundled HDSL Loop including manual service inquiry and facility reservation - Zone 2		2	UHL	UHL4X	17.67	341.65	220.45					26.94	12.76	0.00	0.00
	4-Wire Unbundled HDSL Loop including manual service inquiry and facility reservation - Zone 3		3	UHL	UHL4X	27.24	341.65	220.45					26.94	12.76	0.00	0.00
	Order Coordination for Specified Conversion Time (per LSR)			UHL	OCOSL		45.34									
	4-Wire Unbundled HDSL Loop without manual service inquiry and facility reservation - Zone 1		1	UHL	UHL4W	10.62	264.39	188.96					26.94	12.76	0.00	0.00
	4-Wire Unbundled HDSL Loop without manual service inquiry and facility reservation - Zone 2		2	UHL	UHL4W	17.67	264.39	188.96					26.94	12.76	0.00	0.00
	4-Wire Unbundled HDSL Loop without manual service inquiry and facility reservation - Zone 3		3	UHL	UHL4W	27.24	264.39	188.96					26.94	12.76	0.00	0.00
	Order Coordination for Specified Conversion Time (per LSR)			UHL	OCOSL		45.34									
	CLEC to CLEC Conversion Charge without outside dispatch			UHL	UREWO		86.06	40.36					26.94	12.76	0.00	0.00
4-WIRE DS1 DIGITAL LOOP																
	4-Wire DS1 Digital Loop - Zone 1		1	USL	USLXX	47.60	714.84	421.47					42.19	12.76	0.00	0.00
	4-Wire DS1 Digital Loop - Zone 2		2	USL	USLXX	84.36	714.84	421.47					42.19	12.76	0.00	0.00
	4-Wire DS1 Digital Loop - Zone 3		3	USL	USLXX	134.29	714.84	421.47					42.19	12.76	0.00	0.00
	Order Coordination for Specified Conversion Time (per LSR)			USL	OCOSL		48.31									
	CLEC to CLEC Conversion Charge without outside dispatch			USL	UREWO		100.99	43.00					26.94	12.76	0.00	0.00
4-WIRE 19.2, 56 OR 64 KBPS DIGITAL GRADE LOOP																

UNBUNDLED NETWORK ELEMENTS - North Carolina														Attachment: 2		Exhibit: A	
CATEGORY		RATE ELEMENTS	Interim	Zone	BCS	USOC	RATES ($)					Svc Order Submitted Elec per LSR	Svc Order Submitted Manually per LSR	Incremental Charge - Manual Svc Order vs. Electronic-1st	Incremental Charge - Manual Svc Order vs. Electronic-Add'l	Incremental Charge - Manual Svc Order vs. Electronic-Disc 1st	Incremental Charge - Manual Svc Order vs. Electronic-Disc Add'l
							Rec	Nonrecurring		Nonrecurring Disconnect		OSS Rates ($)					
								First	Add'l	First	Add'l	SOMEC	SOMAN	SOMAN	SOMAN	SOMAN	SOMAN
		4 Wire Unbundled Digital 19.2 Kbps		1	UDL	UDL19	25.32	489.04	337.51					26.94	12.76	0.00	0.00
		4 Wire Unbundled Digital 19.2 Kbps		2	UDL	UDL19	43.11	489.04	337.51					26.94	12.76	0.00	0.00
		4 Wire Unbundled Digital 19.2 Kbps		3	UDL	UDL19	67.26	489.04	337.51					26.94	12.76	0.00	0.00
		4 Wire Unbundled Digital Loop 56 Kbps - Zone 1		1	UDL	UDL56	25.32	489.04	337.51					26.94	12.76	0.00	0.00
		4 Wire Unbundled Digital Loop 56 Kbps - Zone 2		2	UDL	UDL56	43.11	489.04	337.51					26.94	12.76	0.00	0.00
		4 Wire Unbundled Digital Loop 56 Kbps - Zone 3		3	UDL	UDL56	67.26	489.04	337.51					26.94	12.76	0.00	0.00
		Order Coordination for Specified Conversion Time (per LSR)			UDL	OCOSL		45.34									
		4 Wire Unbundled Digital Loop 64 Kbps - Zone 1		1	UDL	UDL64	25.32	489.04	337.51					26.94	12.76	0.00	0.00
		4 Wire Unbundled Digital Loop 64 Kbps - Zone 2		2	UDL	UDL64	43.11	489.04	337.51					26.94	12.76	0.00	0.00
		4 Wire Unbundled Digital Loop 64 Kbps - Zone 3		3	UDL	UDL64	67.26	489.04	337.51					26.94	12.76	0.00	0.00
		Order Coordination for Specified Conversion Time (per LSR)			UDL	OCOSL		45.34									
		CLEC to CLEC Conversion Charge without outside dispatch			UDL	UREWO		102.03	49.70					26.94	12.76	0.00	0.00
	2-WIRE Unbundled COPPER LOOP																
		2-Wire Unbundled Copper Loop-Designed including manual service inquiry & facility reservation - Zone 1		1	UCL	UCLPB	13.26	262.86	143.75					26.94	12.76	0.00	0.00
		2-Wire Unbundled Copper Loop-Designed including manual service inquiry & facility reservation - Zone 2		2	UCL	UCLPB	22.39	262.86	143.75					26.94	12.76	0.00	0.00
		2 Wire Unbundled Copper Loop-Designed including manual service inquiry & facility reservation - Zone 3		3	UCL	UCLPB	34.80	262.86	143.75					26.94	12.76	0.00	0.00
		Order Coordination for Unbundled Copper Loops (per loop)			UCL	UCLMC		61.38	61.38								
		2-Wire Unbundled Copper Loop-Designed without manual service inquiry and facility reservation - Zone 1		1	UCL	UCLPW	13.26	188.39	112.96					26.94	12.76	0.00	0.00
		2-Wire Unbundled Copper Loop-Designed without manual service inquiry and facility reservation - Zone 2		2	UCL	UCLPW	22.39	188.39	112.96					26.94	12.76	0.00	0.00
		2-Wire Unbundled Copper Loop-Designed without manual service inquiry and facility reservation - Zone 3		3	UCL	UCLPW	34.80	188.39	112.96					26.94	12.76	0.00	0.00
		Order Coordination for Unbundled Copper Loops (per loop)			UCL	UCLMC		61.38	61.38								
		CLEC to CLEC Conversion Charge without outside dispatch (UCL-Des)			UCL	UREWO		97.14	42.44					26.94	12.76	0.00	0.00
	4-WIRE COPPER LOOP																
		4-Wire Copper Loop including manual service inquiry and facility reservation - Zone 1		1	UCL	UCL4S	17.36	311.03	191.93					26.94	12.76	0.00	0.00
		4-Wire Copper Loop including manual service inquiry and facility reservation - Zone 2		2	UCL	UCL4S	29.61	311.03	191.93					26.94	12.76	0.00	0.00
		4-Wire Copper Loop including manual service inquiry and facility reservation - Zone 3		3	UCL	UCL4S	46.26	311.03	191.93					26.94	12.76	0.00	0.00
		Order Coordination for Unbundled Copper Loops (per loop)			UCL	UCLMC		61.38	61.38								
		4-Wire Copper Loop without manual service inquiry and facility reservation - Zone 1		1	UCL	UCL4W	17.36	236.57	161.14					26.94	12.76	0.00	0.00
		4-Wire Copper Loop without manual service inquiry and facility reservation - Zone 2		2	UCL	UCL4W	29.61	236.57	161.14					26.94	12.76	0.00	0.00
		4-Wire Copper Loop without manual service inquiry and facility reservation - Zone 3		3	UCL	UCL4W	46.26	236.57	161.14					26.94	12.76	0.00	0.00
		Order Coordination for Unbundled Copper Loops (per loop)			UCL	UCLMC		61.38	61.38								
		CLEC to CLEC Conversion Charge without outside dispatch (UCL-Des)			UCL	UREWO		97.14	42.44								
LOOP MODIFICATION																	
		Unbundled Loop Modification, Removal of Load Coils - 2 Wire pair less than or equal to 18k ft, per Unbundled Loop			UAL, UHL, UCL, UEQ, ULS, UEA, UEANL, UEPSR, UEPSB	ULM2L		21.24	21.24					26.94	12.76	0.00	0.00
		Unbundled Loop Modification Removal of Load Coils - 4 Wire less than or equal to 18K ft, per Unbundled Loop			UHL, UCL, UEA	ULM4L		21.24	21.24					26.94	12.76	0.00	0.00
		Unbundled Loop Modification Removal of Bridged Tap Removal, per unbundled loop			UAL, UHL, UCL, UEQ, ULS, UEA, UEANL, UEPSR, UEPSB	ULMBT		24.84	24.84					26.94	12.76	0.00	0.00
SUB-LOOPS																	
	Sub-Loop Distribution																

UNBUNDLED NETWORK ELEMENTS - North Carolina														Attachment: 2		Exhibit: A	
CATEGORY	RATE ELEMENTS	Interim	Zone	BCS	USOC	RATES ($)					Svc Order Submitted Elec per LSR	Svc Order Submitted Manually per LSR	Incremental Charge - Manual Svc Order vs. Electronic-1st	Incremental Charge - Manual Svc Order vs. Electronic-Add'l	Incremental Charge - Manual Svc Order vs. Electronic-Disc 1st	Incremental Charge - Manual Svc Order vs. Electronic-Disc Add'l
						Rec	Nonrecurring		Nonrecurring Disconnect		OSS Rates ($)					
							First	Add'l	First	Add'l	SOMEC	SOMAN	SOMAN	SOMAN	SOMAN	SOMAN
	Sub-Loop - Per Cross Box Location - CLEC Feeder Facility Set-Up	I		UEANL	USBSA		373.57						26.94	12.76	0.00	0.00
	Sub-Loop - Per Cross Box Location - Per 25 Pair Panel Set-Up	I		UEANL	USBSB		33.78						26.94	12.76	0.00	0.00
	Sub-Loop - Per Building Equipment Room - CLEC Feeder Facility Set-Up	I		UEANL	USBSC		234.76						26.94	12.76	0.00	0.00
	Sub-Loop - Per Building Equipment Room - Per 25 Pair Panel Set-Up	I		UEANL	USBSD		81.05						26.94	12.76	0.00	0.00
	Sub-Loop Distribution Per 2-Wire Analog Voice Grade Loop - Zone 1	I	1	UEANL	USBN2	7.31	126.03	54.54					26.94	12.76	0.00	0.00
	Sub-Loop Distribution Per 2-Wire Analog Voice Grade Loop - Zone 2	I	2	UEANL	USBN2	11.93	126.03	54.54					26.94	12.76	0.00	0.00
	Sub-Loop Distribution Per 2-Wire Analog Voice Grade Loop - Zone 3	I	3	UEANL	USBN2	18.20	126.03	54.54					26.94	12.76	0.00	0.00
	Order Coordination for Unbundled Sub-Loops, per sub-loop pair			UEANL	USBMC		61.38	61.38								
	Sub-Loop Distribution Per 4-Wire Analog Voice Grade Loop - Zone 1		1	UEANL	USBN4	8.44	156.52	79.66					26.94	12.76	0.00	0.00
	Sub-Loop Distribution Per 4-Wire Analog Voice Grade Loop - Zone 2		2	UEANL	USBN4	13.81	156.52	79.66					26.94	12.76	0.00	0.00
	Sub-Loop Distribution Per 4-Wire Analog Voice Grade Loop - Zone 3		3	UEANL	USBN4	21.10	156.52	79.66					26.94	12.76	0.00	0.00
	Order Coordination for Unbundled Sub-Loops, per sub-loop pair			UEANL	USBMC		61.38	61.38								
	Sub-Loop 2-Wire Intrabuilding Network Cable (INC)	I		UEANL	USBR2	2.79	114.05	37.20					26.94	12.76	0.00	0.00
	Order Coordination for Unbundled Sub-Loops, per sub-loop pair			UEANL	USBMC		61.38	61.38								
	Sub-Loop 4-Wire Intrabuilding Network Cable (INC)	I		UEANL	USBR4	3.74	127.67	50.82					26.94	12.76	0.00	0.00
	Order Coordination for Unbundled Sub-Loops, per sub-loop pair			UEANL	USBMC		61.38	61.38								
	Loop Testing - Basic 1st Half Hour			UEANL	URET1		76.24	76.24								
	Loop Testing - Basic Additional Half Hour			UEANL	URETA		39.51	39.51								
	2 Wire Copper Unbundled Sub-Loop Distribution - Zone 1	I	1	UEF	UCS2X	6.10	137.10	60.24					26.94	12.76	0.00	0.00
	2 Wire Copper Unbundled Sub-Loop Distribution - Zone 2	I	2	UEF	UCS2X	9.70	137.10	60.24					26.94	12.76	0.00	0.00
	2 Wire Copper Unbundled Sub-Loop Distribution - Zone 3	I	3	UEF	UCS2X	14.59	137.10	60.24					26.94	12.76	0.00	0.00
	Order Coordination for Unbundled Sub-Loops, per sub-loop pair			UEF	USBMC		61.38	61.38								
	4 Wire Copper Unbundled Sub-Loop Distribution - Zone 1	I	1	UEF	UCS4X	6.58	162.24	85.38					26.94	12.76	0.00	0.00
	4 Wire Copper Unbundled Sub-Loop Distribution - Zone 2	I	2	UEF	UCS4X	10.51	162.24	85.38					26.94	12.76	0.00	0.00
	4 Wire Copper Unbundled Sub-Loop Distribution - Zone 3	I	3	UEF	UCS4X	15.84	162.24	85.38					26.94	12.76	0.00	0.00
	Order Coordination for Unbundled Sub-Loops, per sub-loop pair			UEF	USBMC		61.38	61.38								
	Loop Testing - Basic 1st Half Hour			UEF	URET1		76.24	76.24								
	Loop Testing - Basic Additional Half Hour			UEF	URETA		39.51	39.51								
	Unbundled Network Terminating Wire (UNTW)															
	Unbundled Network Terminating Wire (UNTW) per Pair			UENTW	UENPP	0.4351	64.98						26.94	12.76	0.00	0.00
	Network Interface Device (NID)															
	Network Interface Device (NID) - 1-2 lines	I		UENTW	UND12		86.37	56.69					26.94	12.76	0.00	0.00
	Network Interface Device (NID) - 1-6 lines	I		UENTW	UND16		127.93	98.21					26.94	12.76	0.00	0.00
	Network Interface Device Cross Connect - 2 W	I		UENTW	UNDC2		11.68	11.68					26.94	12.76	0.00	0.00
	Network Interface Device Cross Connect - 4W	I		UENTW	UNDC4		11.68	11.68					26.94	12.76	0.00	0.00
UNE OTHER, PROVISIONING ONLY - NO RATE																
	NID - Dispatch and Service Order for NID installation			UENTW	UNDBX	0.00	0.00									
	UNTW Circuit Id Establishment, Provisioning Only - No Rate			UENTW	UENCE	0.00	0.00									
	Unbundled Contract Name, Provisioning Only - No Rate			UEANL,UEF,UEQ,UENTW	UNECN	0.00	0.00									
UNE OTHER, PROVISIONING ONLY - NO RATE																

UNBUNDLED NETWORK ELEMENTS - North Carolina														Attachment: 2		Exhibit: A	
CATEGORY		RATE ELEMENTS	Interim	Zone	BCS	USOC	RATES ($)					Svc Order Submitted Elec per LSR	Svc Order Submitted Manually per LSR	Incremental Charge - Manual Svc Order vs. Electronic-1st	Incremental Charge - Manual Svc Order vs. Electronic-Add'l	Incremental Charge - Manual Svc Order vs. Electronic-Disc 1st	Incremental Charge - Manual Svc Order vs. Electronic-Disc Add'l
							Rec	Nonrecurring		Nonrecurring Disconnect		OSS Rates ($)					
								First	Add'l	First	Add'l	SOMEC	SOMAN	SOMAN	SOMAN	SOMAN	SOMAN
		Unbundled Contact Name, Provisioning Only - no rate			UAL,UCL,UDC,UDL, UDN,UEA,UHL,ULC	UNECN	0.00	0.00									
		Unbundled Sub-Loop Feeder-2 Wire Cross Box Jumper - no rate			UEA,UDN,UCL,UDC	USBFQ	0.00	0.00									
		Unbundled Sub-Loop Feeder-4 Wire Cross Box Jumper - no rate			UEA,USL,UCL,UDL	USBFR	0.00	0.00									
		Unbundled DS1 Loop - Superframe Format Option - no rate			USL	CCOSF	0.00	0.00									
		Unbundled DS1 Loop - Expanded Superframe Format option - no rate			USL	CCOEF	0.00	0.00									
HIGH CAPACITY UNBUNDLED LOCAL LOOP																	
		High Capacity Unbundled Local Loop - DS3 - Per Mile per month			UE3	1L5ND	13.33										
		High Capacity Unbundled Local Loop - DS3 - Facility Termination per month			UE3	UE3PX	450.69	1,071.00	646.12					53.48	53.48		
		High Capacity Unbundled Local Loop - STS-1 - Per Mile per month			UDLSX	1L5ND	13.33										
		High Capacity Unbundled Local Loop - STS-1 - Facility Termination per month			UDLSX	UDLS1	464.26	1,071.00	646.12					53.48	53.48		
LOOP MAKE-UP																	
		Loop Makeup - Preordering Without Reservation, per working or spare facility queried (Manual).			UMK	UMKLW		55.44	55.44					19.99	19.99	19.99	19.99
		Loop Makeup - Preordering With Reservation, per spare facility queried (Manual).			UMK	UMKLP		55.73	55.73					19.99	19.99	19.99	19.99
		Loop Makeup--With or Without Reservation, per working or spare facility queried (Mechanized)			UMK	UMKMQ		0.6960821	0.6960821								
LINE SHARING AND LINE SPLITTING																	
	NOTE 1: The Line Sharing monthly recurring rates for all installations completed from October 02, 2003 through midnight October 01, 2004 shall be billed as follows:																
	NOTE 1: 10/02/2003 – 10/01/2004: 25% of the rate for an unbundled copper loop non-designed ("UCLND")																
	NOTE 1: 10/02/2004 – 10/01/2005: 50% of the rate for UCLND																
	NOTE 1: 10/02/2005 – 10/01/2006: 75% of the rate for UCLND																
	NOTE 1: Above will apply to USOCS: ULSDT and ULSCT																
	****NOTE 2: The Line Sharing monthly recurring rates with USOCs ULSDC and ULSCC applies only to circuits installed and inservice on or before October 1, 2003**																
	LINE SHARING																
	SPLITTERS-CENTRAL OFFICE BASED																
		Line Sharing Splitter, per System 96 Line Capacity			ULS	ULSDA	181.18	631.54	0.00					26.94	12.76		
		Line Sharing Splitter, per System 24 Line Capacity			ULS	ULSDB	38.99	631.54	0.00					26.94	12.76		
		Line Sharing Splitter, Per System, 8 Line Capacity			ULS	ULSD8	12.73	424.61	0.00					26.94	12.76		
		Line Sharing-DLEC Owned Splitter in CO-CFA activaton-deactivation (per LSOD)			ULS	ULSDG		146.32	31.27					26.94	12.76		
	END USER ORDERING-CENTRAL OFFICE BASED LINE SHARING																
		Line Sharing - per Line Activation (BST Owned splitter) - OBSOLETE see **NOTE 2			ULS	ULSDC	0.61	54.71	28.77					26.94	12.76		
		Line Share Service, TRO per line activation, BST owned splitter - Central Office Located (25% of UCLND) - please see NOTE 1 (E:10/2/2003)			ULS	ULSDT	3.49	54.71	28.77								
		Line Share Service, TRO per line activation, BST owned splitter - Central Office Located (50% of UCLND) - please see NOTE 1 (E:10/2/2004)			ULS	ULSDT	6.99	54.71	28.77								
		Line Share Service, TRO per line activation, BST owned splitter - Central Office Located (75% of UCLND) - please see NOTE 1 (E:10/2/2005)			ULS	ULSDT	10.48	54.71	28.77								
		Line Sharing - per Subsequent Activity per Line Rearrangement(BST Owned Splitter			ULS	ULSDS		35.42	16.57					26.94	12.76		
		Line Sharing - per Subsequent Activity per Line Rearrangement(DLEC Owned Splitter			ULS	ULSCS		35.14	16.29					26.94	12.76		
		Line Sharing - per Line Activation (DLEC owned Splitter) - OBSOLETE see **NOTE 2			ULS	ULSCC	0.61	47.44	19.31					26.94	12.76		

UNBUNDLED NETWORK ELEMENTS - North Carolina														Attachment: 2		Exhibit: A	
CATEGORY		RATE ELEMENTS	Interim	Zone	BCS	USOC	RATES ($)					Svc Order Submitted Elec per LSR	Svc Order Submitted Manually per LSR	Incremental Charge - Manual Svc Order vs. Electronic-1st	Incremental Charge - Manual Svc Order vs. Electronic-Add'l	Incremental Charge - Manual Svc Order vs. Electronic-Disc 1st	Incremental Charge - Manual Svc Order vs. Electronic-Disc Add'l
							Rec	Nonrecurring		Nonrecurring Disconnect		OSS Rates ($)					
								First	Add'l	First	Add'l	SOMEC	SOMAN	SOMAN	SOMAN	SOMAN	SOMAN
		Line Share Service, TRO per line activation, CLEC owned splitter - Central Office Located (25% of UCLND) - please see NOTE 1 (E:10/2/2003)			ULS	ULSCT	3.49	47.44	19.31								
		Line Share Service, TRO per line activation, CLEC owned splitter - Central Office Located (50% of UCLND) - please see NOTE 1 (E:10/2/2004)			ULS	ULSCT	6.99	47.44	19.31								
		Line Share Service, TRO per line activation, CLEC owned splitter - Central Office Located (75% of UCLND) - please see NOTE 1 (E:10/2/2005)			ULS	ULSCT	10.48	47.44	19.31								
	LINE SPLITTING																
	END USER ORDERING-CENTRAL OFFICE BASED																
		Line Splitting - per line activation DLEC owned splitter			UEPSR UEPSB	UREOS	0.61										
		Line Splitting - per line activation BST owned - physical			UEPSR UEPSB	UREBP	0.61	56.92	28.59					26.94	12.76		
		Line Splitting - per line activation BST owned - virtual			UEPSR UEPSB	UREBV	0.61	56.92	28.59					26.94	12.76		
	MAINTENANCE																
		No Trouble Found - per 1/2 hour increments - Basic						80.00	55.00								
		No Trouble Found - per 1/2 hour increments - Overtime						120.00	82.50								
		No Trouble Found - per 1/2 hour increments - Premium						160.00	110.00								
UNBUNDLED DEDICATED TRANSPORT																	
	INTEROFFICE CHANNEL - DEDICATED TRANSPORT																
		Interoffice Channel - Dedicated Transport - 2-Wire Voice Grade - Per Mile per month			U1TVX	1L5XX	0.0125										
		Interoffice Channel - Dedicated Transport- 2- Wire Voice Grade - Facility Termination			U1TVX	U1TV2	18.00	137.48	52.58					38.07	38.07		
		Interoffice Channel - Dedicated Transpor t- 2-Wire Voice Grade Rev Bat. - Per Mile per month			U1TVX	1L5XX	0.0125										
		Interoffice Channel - Dedicated Transport- 2- Wire VG Rev Bat. - Facility Termination			U1TVX	U1TR2	18.00	137.48	52.58					38.07	38.07		
		Interoffice Channel - Dedicated Transport - 4-Wire Voice Grade - Per Mile per month			U1TVX	1L5XX	0.0125										
		Interoffice Channel - Dedicated Transport - 4- Wire Voice Grade - Facility Termination			U1TVX	U1TV4	22.16	106.11	65.95					22.32	22.32		
		Interoffice Channel - Dedicated Transport - 56 kbps - per mile per month			U1TDX	1L5XX	0.0282										
		Interoffice Channel - Dedicated Transport - 56 kbps - Facility Termination			U1TDX	U1TD5	17.40	137.48	52.58					38.07	38.07		
		Interoffice Channel - Dedicated Transport - 64 kbps - per mile per month			U1TDX	1L5XX	0.0282										
		Interoffice Channel - Dedicated Transport - 64 kbps - Facility Termination			U1TDX	U1TD6	17.40	137.48	52.58					38.07	38.07		
		Interoffice Channel - Dedicated Channel - DS1 - Per Mile per month			U1TD1	1L5XX	0.5753										
		Interoffice Channel - Dedicated Tranport - DS1 - Facility Termination			U1TD1	U1TF1	71.29	217.17	163.75					38.07	38.07		
		Interoffice Channel - Dedicated Transport - DS3 - Per Mile per month			U1TD3	1L5XX	12.98										
		Interoffice Channel - Dedicated Transport - DS3 - Facility Termination per month			U1TD3	U1TF3	720.38	794.94	579.55					91.26	91.26		
		Interoffice Channel - Dedicated Transport - STS-1 - Per Mile per month			U1TS1	1L5XX	6.14										
		Interoffice Channel - Dedicated Transport - STS-1 - Facility Termination			U1TS1	U1TFS	790.37	642.23	408.89					53.48	53.48		
DARK FIBER																	
		Dark Fiber, Four Fiber Strands, Per Route Mile or Fraction Thereof per month - Interoffice Channel			UDF, UDFCX	1L5DF	27.71										
		NRC Dark Fiber - Interoffice Channel			UDF, UDFCX	UDF14		1,807.00	562.96								
		Dark Fiber, Four Fiber Strands, Per Route Mile or Fraction Thereof per month - Local Loop			UDF, UDFCX	1L5DL	64.04										
		NRC Dark Fiber - Local Loop			UDF, UDFCX	UDFL4		1,347.00	279.87								

UNBUNDLED NETWORK ELEMENTS - North Carolina														Attachment: 2		Exhibit: A	
CATEGORY		RATE ELEMENTS	Interim	Zone	BCS	USOC	RATES ($)					Svc Order Submitted Elec per LSR	Svc Order Submitted Manually per LSR	Incremental Charge - Manual Svc Order vs. Electronic-1st	Incremental Charge - Manual Svc Order vs. Electronic-Add'l	Incremental Charge - Manual Svc Order vs. Electronic-Disc 1st	Incremental Charge - Manual Svc Order vs. Electronic-Disc Add'l
							Rec	Nonrecurring		Nonrecurring Disconnect		OSS Rates ($)					
								First	Add'l	First	Add'l	SOMEC	SOMAN	SOMAN	SOMAN	SOMAN	SOMAN
8XX ACCESS TEN DIGIT SCREENING																	
		8XX Access Ten Digit Screening, Per Call			OHD		0.0005										
		8XX Access Ten Digit Screening, Reservation Charge Per 8XX Number Reserved			OHD	N8R1X		7.05	0.96					26.94			
		8XX Access Ten Digit Screening, Per 8XX No. Established W/O POTS Translations			OHD			23.82	2.73					41.35			
		8XX Access Ten Digit Screening, Per 8XX No. Established With POTS Translations			OHD	N8FTX		23.82	2.73					41.35			
		8XX Access Ten Digit Screening, Customized Area of Service Per 8XX Number			OHD	N8FCX		5.63	2.82								
		8XX Access Ten Digit Screening, Multiple InterLATA CXR Routing Per CXR Requested Per 8XX No.			OHD	N8FMX		6.59	3.77								
		8XX Access Ten Digit Screening, Change Charge Per Request			OHD	N8FAX		8.01	0.96					26.94			
		8XX Access Ten Digit Screening, Call Handling and Destination Features			OHD	N8FDX		5.63									
LINE INFORMATION DATA BASE ACCESS (LIDB)																	
		LIDB Common Transport Per Query			OQT		0.00003										
		LIDB Validation Per Query			OQU		0.0134										
		LIDB Originating Point Code Establishment or Change			OQT, OQU	NRBPX		62.26						26.94	26.94		
SIGNALING (CCS7)																	
		CCS7 Signaling Connection, Per link (A link)			UDB	TPP++	18.22	278.02	278.02					41.35	41.35		
		CCS7 Signaling Connection, Per link (B link) (also known as D link)			UDB	TPP++	18.22	278.02	278.02					41.35	41.35		
		CCS7 Signaling Termination, Per STP Port			UDB	PT8SX	132.83										
		CCS7 Signaling Usage, Per ISUP Message			UDB		0.00004										
		CCS7 Signaling Usage, Per TCAP Message			UDB		0.00009										
		CCS7 Signaling Usage Surrogate, per link per LATA			UDB	STU56	338.98										
		CCS7 Signaling Point Code, per Originating Point Code Establishment or Change, per STP affected			UDB	CCAPO		40.00	40.00					19.99	19.99		
		CCS7 Signaling Point Code, per Destination Point Code Establishment or Change, Per Stp Affected			UDB	CCAPD		8.00	8.00					19.99	19.99		
E911 SERVICE																	
		Local Channel - Dedicated - 2-wr Voice Grade - Zone 1		1			11.24	553.80	89.69					42.17	12.76		
		Local Channel - Dedicated - 2-wr Voice Grade - Zone 2		2			19.91	553.80	89.69					42.17	12.76		
		Local Channel - Dedicated - 2-wr Voice Grade - Zone 3		3			31.70	553.80	89.69					42.17	12.76		
		Interoffice Transport - Dedicated - 2-wr Voice Grade Per Mile					0.0282										
		Interoffice Transport - Dedicated - 2-wr Voice Grade Per Facility Termination					18.00	137.48	52.58					38.07	38.07		
		Local Channel - Dedicated - DS1 - Zone 1		1			27.05	534.48	462.69					86.15	1.77		
		Local Channel - Dedicated - DS1 - Zone 2		2			47.94	534.48	462.69					86.15	1.77		
		Local Channel - Dedicated - DS1 - Zone 3		3			76.32	534.48	462.69					86.15	1.77		
		Interoffice Transport - Dedicated - DS1 Per Mile					0.5753										
		Interoffice Transport - Dedicated - DS1 Per Facility Termination					71.29	217.17	163.75					38.07	38.07		
CALLING NAME (CNAM) SERVICE																	
		CNAM For DB Owners - Service Establishment			OQV			75.62									
		CNAM For Non DB Owners - Service Establishment			OQV			75.62									
		CNAM For DB Owners - Service Provisioning With Point Code Establishment (Initial)			OQV			2,354.00	2,354.00								
		CNAM For DB Owners - Service Provisioning With Point Code Establishment (Subsequent)			OQV			1,739.00	1,739.00								
		CNAM For Non DB Owners - Service Provisioning With Point Code Establishment (Initial)			OQV			1,072.00	1,072.00								
		CNAM For Non DB Owners - Service Provisioning With Point Code Establishment (Subsequent)			OQV			768.44	768.44								
		CNAM for DB & Non DB Owners, Per Query			OQV		0.0009592										
SELECTIVE ROUTING																	
		Selective Routing Per Unique Line Class Code Per Request Per Switch						188.59						26.94	12.76		

UNBUNDLED NETWORK ELEMENTS - North Carolina														Attachment: 2		Exhibit: A	
CATEGORY		RATE ELEMENTS	Interim	Zone	BCS	USOC	RATES ($)					Svc Order Submitted Elec per LSR	Svc Order Submitted Manually per LSR	Incremental Charge - Manual Svc Order vs. Electronic-1st	Incremental Charge - Manual Svc Order vs. Electronic-Add'l	Incremental Charge - Manual Svc Order vs. Electronic-Disc 1st	Incremental Charge - Manual Svc Order vs. Electronic-Disc Add'l
							Rec	Nonrecurring		Nonrecurring Disconnect		OSS Rates ($)					
								First	Add'l	First	Add'l	SOMEC	SOMAN	SOMAN	SOMAN	SOMAN	SOMAN
VIRTUAL COLLOCATION																	
		Virtual Collocation-2 Wire Cross Connects (Loop) for Line Splitting			UEPSR UEPSB	VE1LS	0.0287	33.96	32.08	0.00	0.00			19.99	19.99		
PHYSICAL COLLOCATION																	
		Physical Collocation-2 Wire Cross Connects (Loop) for Line Splitting			UEPSR UEPSB	PE1LS	0.0309	33.53	31.65	0.00	0.00			19.99	19.99		
AIN SELECTIVE CARRIER ROUTING																	
		Regional Service Establishment			SRC	SRCEC		215,597.00									
		End Office Establishment			SRC	SRCEO		347.27									
		Query NRC, per query			SRC		0.0053758										
AIN - BELLSOUTH AIN SMS ACCESS SERVICE																	
		AIN SMS Access Service - Service Establishment, Per State, Initial Setup			A1N	CAMSE		294.77									
		AIN SMS Access Service - Port Connection - Dial/Shared Access			A1N	CAMDP		86.94									
		AIN SMS Access Service - Port Connection - ISDN Access			A1N	CAM1P		86.94									
		AIN SMS Access Service - User Identification Codes - Per User ID Code			A1N	CAMAU		200.83									
		AIN SMS Access Service - Security Card, Per User ID Code, Initial or Replacement			A1N	CAMRC		172.05									
		AIN SMS Access Service - Storage, Per Unit (100 Kilobytes)					0.0023										
		AIN SMS Access Service - Session, Per Minute					0.0791										
		AIN SMS Access Service - Company Performed Session, Per Minute					2.08										
AIN - BELLSOUTH AIN TOOLKIT SERVICE																	
		AIN Toolkit Service - Service Establishment Charge, Per State, Initial Setup			CAM	BAPSC		290.05									
		AIN Toolkit Service - Training Session, Per Customer				BAPVX		8,363.00									
		AIN Toolkit Service - Trigger Access Charge, Per Trigger, Per DN, Term. Attempt				BAPTT		72.76									
		AIN Toolkit Service - Trigger Access Charge, Per Trigger, Per DN, Off-Hook Delay				BAPTD		72.76									
		AIN Toolkit Service - Trigger Access Charge, Per Trigger, Per DN, Off-Hook Immediate				BAPTM		72.76									
		AIN Toolkit Service - Trigger Access Charge, Per Trigger, Per DN, 10-Digit PODP				BAPTO		149.95									
		AIN Toolkit Service - Trigger Access Charge, Per Trigger, Per DN, CDP				BAPTC		149.95									
		AIN Toolkit Service - Trigger Access Charge, Per Trigger, Per DN, Feature Code				BAPTF		149.95									
		AIN Toolkit Service - Query Charge, Per Query					0.02										
		AIN Toolkit Service - Type 1 Node Charge, Per AIN Toolkit Subscription, Per Node, Per Query					0.005										
		AIN Toolkit Service - SCP Storage Charge, Per SMS Access Account, Per 100 Kilobytes					1.45										
		AIN Toolkit Service - Monthly report - Per AIN Toolkit Service Subscription			CAM	BAPMS	15.98	71.80									
		AIN Toolkit Service - Special Study - Per AIN Toolkit Service Subscription			CAM	BAPLS	0.08	47.20									
		AIN Toolkit Service - Call Event Report - Per AIN Toolkit Service Subscription			CAM	BAPDS	15.90	71.80									
		AIN Toolkit Service - Call Event Special Study - Per AIN Toolkit Service Subscription			CAM	BAPES	0.003	47.20									
ENHANCED EXTENDED LINK (EELs)																	
	NOTE: The monthly recurring and non-recurring charges below will apply and the Switch-As-Is Charge will not apply for UNE combinations provisioned as ' Ordinarily Combined' Network Elements.																
	NOTE: The monthly recurring and the Switch-As-Is Charge and not the non-recurring charges below will apply for UNE combinations provisioned as ' Currently Combined' Network Elements.																
	EXTENTED 2-WIRE VOICE GRADE EXTENDED LOOP WITH DEDICATED DS1 INTEROFFICE TRANSPORT																
		First 2-Wire VG Loop (SL2) in Combination - Zone 1		1	UNCVX	UEAL2	14.97	142.97	106.56					38.07	38.07		
		First 2-Wire VG Loop (SL2) in Combination - Zone 2		2	UNCVX	UEAL2	25.93	142.97	106.56					38.07	38.07		

UNBUNDLED NETWORK ELEMENTS - North Carolina														Attachment: 2		Exhibit: A	
CATEGORY		RATE ELEMENTS	Interim	Zone	BCS	USOC	RATES ($)					Svc Order Submitted Elec per LSR	Svc Order Submitted Manually per LSR	Incremental Charge - Manual Svc Order vs. Electronic-1st	Incremental Charge - Manual Svc Order vs. Electronic-Add'l	Incremental Charge - Manual Svc Order vs. Electronic-Disc 1st	Incremental Charge - Manual Svc Order vs. Electronic-Disc Add'l
							Rec	Nonrecurring		Nonrecurring Disconnect		OSS Rates ($)					
								First	Add'l	First	Add'l	SOMEC	SOMAN	SOMAN	SOMAN	SOMAN	SOMAN
		First 2-Wire VG Loop (SL2) in Combination - Zone 3		3	UNCVX	UEAL2	40.81	142.97	106.56					38.07	38.07		
		Interoffice Transport - Dedicated - DS1 combination - Per Mile per month			UNC1X	1L5XX	0.5753										
		Interoffice Transport - Dedicated - DS1 combination - Facility Termination per month			UNC1X	U1TF1	71.29	217.17	163.75					38.07	38.07		
		1/0 Channelization System in combination Per Month			UNC1X	MQ1	146.69	197.78	140.06								
		Voice Grade COCI - Per Month			UNCVX	1D1VG	1.27	13.09	9.38								
		Each Additional 2-Wire VG Loop (SL 2) in Combination - Zone 1		1	UNCVX	UEAL2	14.97	142.97	106.56					38.07	38.07		
		Each Additional 2-Wire VG Loop (SL 2) in Combination - Zone 2		2	UNCVX	UEAL2	25.93	142.97	106.56					38.07	38.07		
		Each Additional 2-Wire VG Loop (SL 2) in Combination - Zone 3		3	UNCVX	UEAL2	40.81	142.97	106.56					38.07	38.07		
		Voice Grade COCI - Per Month			UNCVX	1D1VG	1.27	13.09	9.38								
		Nonrecurring Currently Combined Network Elements Switch -As-Is Charge			UNC1X	UNCCC		21.75	21.75	32.28	10.96			38.07	38.07		
	EXTENDED 4-WIRE VOICE GRADE EXTENDED LOOP WITH DEDICATED DS1 INTEROFFICE TRANSPORT																
		First 4-Wire Analog Voice Grade Loop in Combination - Zone 1		1	UNCVX	UEAL4	21.32	288.47	237.45					38.07	38.07		
		First 4-Wire Analog Voice Grade Loop in Combination - Zone 2		2	UNCVX	UEAL4	36.27	288.47	237.45					38.07	38.07		
		First 4-Wire Analog Voice Grade Loop in Combination - Zone 3		3	UNCVX	UEAL4	56.57	288.47	237.45					38.07	38.07		
		Interoffice Transport - Dedicated - DS1 combination - Per Mile Per Month			UNC1X	1L5XX	0.5753										
		Interoffice Transport - Dedicated - DS1 - Facility Termination Per Month			UNC1X	U1TF1	71.29	217.17	163.75					38.07	38.07		
		1/0 Channel System in combination Per Month			UNC1X	MQ1	146.69	197.78	140.06								
		Voice Grade COCI in combination - per month			UNCVX	1D1VG	1.27	13.09	9.38								
		Additional 4-Wire Analog Voice Grade Loop in same DS1 Interoffice Transport Combination - Zone 1		1	UNCVX	UEAL4	21.32	288.47	237.45					38.07	38.07		
		Additional 4-Wire Analog Voice Grade Loop in same DS1 Interoffice Transport Combination - Zone 2		2	UNCVX	UEAL4	36.27	288.47	237.45					38.07	38.07		
		Additional 4-Wire Analog Voice Grade Loop in same DS1 Interoffice Transport Combination - Zone 3		3	UNCVX	UEAL4	56.57	288.47	237.45					38.07	38.07		
		Additional Voice Grade COCI in combination - per month			UNCVX	1D1VG	1.27	13.09	9.38								
		Nonrecurring Currently Combined Network Elements Switch -As-Is Charge			UNC1X	UNCCC		21.75	21.75	32.28	10.96			38.07	38.07		
	EXTENDED 4-WIRE 56 KBPS EXTENDED DIGITAL LOOP WITH DEDICATED DS1 INTEROFFICE TRANSPORT																
		First 4-Wire 56Kbps Digital Grade Loop in Combination - Zone 1		1	UNCDX	UDL56	25.32	489.04	337.51					38.07	38.07		
		First 4-Wire 56Kbps Digital Grade Loop in Combination - Zone 2		2	UNCDX	UDL56	43.11	489.04	337.51					38.07	38.07		
		First 4-Wire 56Kbps Digital Grade Loop in Combination - Zone 3		3	UNCDX	UDL56	67.26	489.04	337.51					38.07	38.07		
		Interoffice Transport - Dedicated - DS1 combination - Per Mile Per Month			UNC1X	1L5XX	0.5753										
		Interoffice Transport - Dedicated - DS1 - combination Facility Termination Per Month			UNC1X	U1TF1	71.29	217.17	163.75					38.07	38.07		
		1/0 Channel System in combination Per Month			UNC1X	MQ1	146.69	197.78	140.06								
		OCU-DP COCI (data) per month (2.4-64kbs)			UNCDX	1D1DD	2.00	15.76	11.28								
		Additional 4-Wire 56Kbps Digital Grade Loop in same DS1 Interoffice Transport Combination - Zone 1		1	UNCDX	UDL56	25.32	489.04	337.51					38.07	38.07		
		Additional 4-Wire 56Kbps Digital Grade Loop in same DS1 Interoffice Transport Combination - Zone 2		2	UNCDX	UDL56	43.11	489.04	337.51					38.07	38.07		
		Additional 4-Wire 56Kbps Digital Grade Loop in same DS1 Interoffice Transport Combination - Zone 3		3	UNCDX	UDL56	67.26	489.04	337.51					38.07	38.07		
		Additional OCU-DP COCI (data) - in combination per month (2.4-64kbs)			UNCDX	1D1DD	2.00	15.76	11.28								

UNBUNDLED NETWORK ELEMENTS - North Carolina														Attachment: 2		Exhibit: A	
CATEGORY		RATE ELEMENTS	Interim	Zone	BCS	USOC	RATES ($)					Svc Order Submitted Elec per LSR	Svc Order Submitted Manually per LSR	Incremental Charge - Manual Svc Order vs. Electronic-1st	Incremental Charge - Manual Svc Order vs. Electronic-Add'l	Incremental Charge - Manual Svc Order vs. Electronic-Disc 1st	Incremental Charge - Manual Svc Order vs. Electronic-Disc Add'l
							Rec	Nonrecurring		Nonrecurring Disconnect		OSS Rates ($)					
								First	Add'l	First	Add'l	SOMEC	SOMAN	SOMAN	SOMAN	SOMAN	SOMAN
		Nonrecurring Currently Combined Network Elements Switch -As-Is Charge			UNC1X	UNCCC		21.75	21.75	32.28	10.96			38.07	38.07		
	EXTENDED 4-WIRE 64 KBPS EXTENDED DIGITAL LOOP WITH DEDICATED DS1 INTEROFFICE TRANSPORT																
		First 4-Wire 64Kbps Digital Grade Loop in Combination - Zone 1		1	UNCDX	UDL64	25.32	489.04	337.51					38.07	38.07		
		First 4-Wire 64Kbps Digital Grade Loop in Combination - Zone 2		2	UNCDX	UDL64	43.11	489.04	337.51					38.07	38.07		
		First 4-Wire 64Kbps Digital Grade Loop in Combination - Zone 3		3	UNCDX	UDL64	67.26	489.04	337.51					38.07	38.07		
		Interoffice Transport - Dedicated - DS1 combination - Per Mile Per Month			UNC1X	1L5XX	0.5753										
		interoffice Transport - Dedicated - DS1 combination - Facility Termination Per Month			UNC1X	U1TF1	71.29	217.17	163.75					38.07	38.07		
		1/0 Channel System in combination Per Month			UNC1X	MQ1	146.69	197.78	140.06								
		OCU-DP COCI (data) - in combination - per month (2.4-64kbs)			UNCDX	1D1DD	2.00	15.76	11.28								
		Additional 4-Wire 64Kbps Digital Grade Loop in same DS1 Interoffice Transport Combination - Zone 1		1	UNCDX	UDL64	25.32	489.04	337.51					38.07	38.07		
		Additional 4-Wire 64Kbps Digital Grade Loop in same DS1 Interoffice Transport Combination - Zone 2		2	UNCDX	UDL64	43.11	489.04	337.51					38.07	38.07		
		Additional 4-Wire 64Kbps Digital Grade Loop in same DS1 Interoffice Transport Combination - Zone 3		3	UNCDX	UDL64	67.26	489.04	337.51					38.07	38.07		
		Additional OCU-DP COCI (data) - in combination - per month (2.4-64kbs)			UNCDX	1D1DD	2.00	15.76	11.28								
		Nonrecurring Currently Combined Network Elements Switch -As-Is Charge			UNC1X	UNCCC		21.75	21.75	32.28	10.96			38.07	38.07		
	EXTENDED 4-WIRE DS1 DIGITAL EXTENDED LOOP WITH DEDICATED DS1 INTEROFFICE TRANSPORT																
		4-Wire DS1 Digital Loop in Combination - Zone 1		1	UNC1X	USLXX	47.60	714.84	421.47					38.07	38.07		
		4-Wire DS1 Digital Loop in Combination - Zone 2		2	UNC1X	USLXX	84.36	714.84	421.47					38.07	38.07		
		4-Wire DS1 Digital Loop in Combination - Zone 3		3	UNC1X	USLXX	134.29	714.84	421.47					38.07	38.07		
		Interoffice Transport - Dedicated - DS1 combination - Per Mile Per Month			UNC1X	1L5XX	0.5753										
		Interoffice Transport - Dedicated - DS1 combination - Facility Termination Per Month			UNC1X	U1TF1	71.29	217.17	163.75					38.07	38.07		
		Nonrecurring Currently Combined Network Elements Switch -As-Is Charge			UNC1X	UNCCC		21.75	21.75	32.28	10.96			38.07	38.07		
	EXTENDED 4-WIRE DS1 DIGITAL EXTENDED LOOP WITH DEDICATED DS3 INTEROFFICE TRANSPORT																
		First DS1Loop in Combination - Zone 1		1	UNC1X	USLXX	47.60	714.84	421.47					38.07	38.07		
		First DS1Loop in Combination - Zone 2		2	UNC1X	USLXX	84.36	714.84	421.47					38.07	38.07		
		First DS1Loop in Combination - Zone 3		3	UNC1X	USLXX	134.29	714.84	421.47					38.07	38.07		
		Interoffice Transport - Dedicated - DS3 combination - Per Mile Per Month			UNC3X	1L5XX	12.98										
		Interoffice Transport - Dedicated - DS3 - Facility Termination per month			UNC3X	U1TF3	720.38	794.94	579.55					38.07	38.07		
		3/1Channel System in combination per month			UNC3X	MQ3	233.10	403.97	234.40								
		DS1 COCI in combination per month			UNC1X	UC1D1	16.07	13.09	9.38								
		Additional DS1Loop in DS3 Interoffice Transport Combination - Zone 1		1	UNC1X	USLXX	47.60	714.84	421.47					38.07	38.07		
		Additional DS1Loop in DS3 Interoffice Transport Combination - Zone 2		2	UNC1X	USLXX	84.36	714.84	421.47					38.07	38.07		
		Additional DS1Loop in DS3 Interoffice Transport Combination - Zone 3		3	UNC1X	USLXX	134.29	714.84	421.47					38.07	38.07		
		Additoinal DS1 COCI in combination per month			UNC1X	UC1D1	16.07	13.09	9.38								
		Nonrecurring Currently Combined Network Elements Switch -As-Is Charge			UNC3X	UNCCC		21.75	21.75	32.28	10.96			38.07	38.07		
	EXTENDED 2-WIRE VOICE GRADE EXTENDED LOOP/ 2 WIRE VOICE GRADE INTEROFFICE TRANSPORT																
		2-WireVG Loop in combination - Zone 1		1	UNCVX	UEAL2	14.97	142.97	106.56								
		2-WireVG Loop in combination - Zone 2		2	UNCVX	UEAL2	25.93	142.97	106.56								
		2-WireVG Loop in combination - Zone 3		3	UNCVX	UEAL2	40.81	142.97	106.56								

UNBUNDLED NETWORK ELEMENTS - North Carolina														Attachment: 2		Exhibit: A	
CATEGORY		RATE ELEMENTS	Interim	Zone	BCS	USOC	RATES ($)					Svc Order Submitted Elec per LSR	Svc Order Submitted Manually per LSR	Incremental Charge - Manual Svc Order vs. Electronic-1st	Incremental Charge - Manual Svc Order vs. Electronic-Add'l	Incremental Charge - Manual Svc Order vs. Electronic-Disc 1st	Incremental Charge - Manual Svc Order vs. Electronic-Disc Add'l
							Rec	Nonrecurring		Nonrecurring Disconnect		OSS Rates ($)					
								First	Add'l	First	Add'l	SOMEC	SOMAN	SOMAN	SOMAN	SOMAN	SOMAN
		Interoffice Transport - 2-wire VG - Dedicated- Per Mile Per Month			UNCVX	1L5XX	0.0282										
		Interoffice Transport - 2-wire VG - Dedicated - Facility Termination per month			UNCVX	U1TV2	18.00	137.48	52.58					38.07	38.07		
		Nonrecurring Currently Combined Network Elements Switch -As-Is Charge			UNCVX	UNCCC		21.75	21.75	32.28	10.96			38.07	38.07		
	EXTENDED 4-WIRE VOICE GRADE EXTENDED LOOP/ 4 WIRE VOICE GRADE INTEROFFICE TRANSPORT																
		4-WireVG Loop in combination - Zone 1		1	UNCVX	UEAL4	21.32	288.47	237.45								
		4-WireVG Loop in combination - Zone 2		2	UNCVX	UEAL4	36.27	288.47	237.45								
		4-WireVG Loop in combination - Zone 3		3	UNCVX	UEAL4	56.57	288.47	237.45								
		Interoffice Transport - 4-wire VG - Dedicated - Per Mile Per Month			UNCVX	1L5XX	0.0282										
		Interoffice Transport - 4-wire VG - Dedicated - Facility Termination per month			UNCVX	U1TV4	22.16	106.11	65.95					38.07	38.07		
		Nonrecurring Currently Combined Network Elements Switch -As-Is Charge			UNCVX	UNCCC		21.75	21.75	32.28	10.96			38.07	38.07		
	EXTENDED DS3 DIGITAL EXTENDED LOOP WITH DEDICATED DS3 INTEROFFICE TRANSPORT																
		DS3 Local Loop in combination - per mile per month			UNC3X	1L5ND	13.33										
		DS3 Local Loop in combination - Facility Termination per month			UNC3X	UE3PX	450.69	1,071.00	646.12								
		Interoffice Transport - Dedicated - DS3 - Per Mile per month			UNC3X	1L5XX	12.98										
		Interoffice Transport - Dedicated - DS3 combination - Facility Termination per month			UNC3X	U1TF3	720.38	794.94	579.55					38.07	38.07		
		Nonrecurring Currently Combined Network Elements Switch -As-Is Charge			UNC3X	UNCCC		21.75	21.75	32.28	10.96			38.07	38.07		
	EXTENDED STS-1 DIGITAL EXTENDED LOOP WITH DEDICATED STS-1 INTEROFFICE TRANSPORT																
		STS-1 Local Lolp in combination - per mile per month			UNCSX	1L5ND	13.33										
		STS-1 Local Loop in combination - Facility Termination per month			UNCSX	UDLS1	464.26	1,071.00	646.12								
		Interoffice Transport - Dedicated - STS-1 combination - per mile per month			UNCSX	1L5XX	6.14										
		Interoffice Transport - Dedicated - STS-1 combination - Facility Termination per month			UNCSX	U1TFS	790.37	642.23	408.89					38.07	38.07		
		Nonrecurring Currently Combined Network Elements Switch -As-Is Charge			UNCSX	UNCCC		21.75	21.75	32.28	10.96			38.07	38.07		
	EXTENDED 2-WIRE ISDN EXTENDED LOOP WITH DS1 INTEROFFICE TRANSPORT																
		First 2-Wire ISDN Loop in Combination - Zone 1		1	UNCNX	U1L2X	19.42	325.91	251.31					38.07	38.07		
		First 2-Wire ISDN Loop in Combination - Zone 2		2	UNCNX	U1L2X	32.88	325.91	251.31					38.07	38.07		
		First 2-Wire ISDN Loop in Combination - Zone 3		3	UNCNX	U1L2X	51.14	325.91	251.31					38.07	38.07		
		Interoffice Transport - Dedicated - DS1 combination - per mile per month			UNC1X	1L5XX	0.5753										
		Interoffice Transport - Dedicated - DS1 combination - Facility Termination per month			UNC1X	U1TF1	71.29	217.17	163.75					38.07	38.07		
		1/0 Channel System in combination - per month			UNC1X	MQ1	146.69	197.78	140.06								
		2-wire ISDN COCI (BRITE) - in combination - per month			UNCNX	UC1CA	3.59	15.76	11.28								
		Additional 2-wire ISDN Loop in same DS1Interoffice Transport Combination - Zone 1		1	UNCNX	U1L2X	19.42	325.91	251.31					38.07	38.07		
		Additional 2-wire ISDN Loop in same DS1Interoffice Transport Combination - Zone 2		2	UNCNX	U1L2X	32.88	325.91	251.31					38.07	38.07		
		Additional 2-wire ISDN Loop in same DS1Interoffice Transport Combination - Zone 3		3	UNCNX	U1L2X	51.14	325.91	251.31					38.07	38.07		
		Additional 2-wire ISDN COCI (BRITE) - in combination- per month			UNCNX	UC1CA	3.59	15.76	11.28								
		Nonrecurring Currently Combined Network Elements Switch -As-Is Charge			UNC1X	UNCCC		21.75	21.75	32.28	10.96			38.07	38.07		
	EXTENDED 4-WIRE DS1 DIGITAL EXTENDED LOOP WITH DEDICATED STS-1 INTEROFFICE TRANSPORT																
		First DS1 Loop Combination - Zone 1		1	UNC1X	USLXX	47.60	714.84	421.47					38.07	38.07		
		First DS1 Loop Combination - Zone 2		2	UNC1X	USLXX	84.36	714.84	421.47					38.07	38.07		
		First DS1 Loop Combination - Zone 3		3	UNC1X	USLXX	134.29	714.84	421.47					38.07	38.07		

UNBUNDLED NETWORK ELEMENTS - North Carolina														Attachment: 2		Exhibit: A	
CATEGORY		RATE ELEMENTS	Interim	Zone	BCS	USOC	RATES ($)					Svc Order Submitted Elec per LSR	Svc Order Submitted Manually per LSR	Incremental Charge - Manual Svc Order vs. Electronic-1st	Incremental Charge - Manual Svc Order vs. Electronic-Add'l	Incremental Charge - Manual Svc Order vs. Electronic-Disc 1st	Incremental Charge - Manual Svc Order vs. Electronic-Disc Add'l
							Rec	Nonrecurring		Nonrecurring Disconnect		OSS Rates ($)					
								First	Add'l	First	Add'l	SOMEC	SOMAN	SOMAN	SOMAN	SOMAN	SOMAN
		Interoffice Transport - Dedicated - STS-1 combination - Per Mile Per Month			UNCSX	1L5XX	6.14										
		Interoffice Transport - Dedicated - STS-1 combination - Facility Termination per month			UNCSX	U1TFS	790.37	642.23	408.89					38.07	38.07		
		3/1 Channel System in combination per month			UNCSX	MQ3	233.10	403.97	234.40								
		DS1 COCI in combination per month			UNC1X	UC1D1	16.07	13.09	9.38								
		Additional DS1Loop in the same STS-1 Interoffice Transport Combination - Zone 1		1	UNC1X	USLXX	47.60	714.84	421.47					38.07	38.07		
		Additional DS1Loop in the same STS-1 Interoffice Transport Combination - Zone 2		2	UNC1X	USLXX	84.36	714.84	421.47					38.07	38.07		
		Additional DS1Loop in the same STS-1 Interoffice Transport Combination - Zone 3		3	UNC1X	USLXX	134.29	714.84	421.47					38.07	38.07		
		DS1 COCI in combination per month			UNC1X	UC1D1	16.07	13.09	9.38								
		Nonrecurring Currently Combined Network Elements Switch -As-Is Charge			UNCSX	UNCCC		21.75	21.75	32.28	10.96			38.07	38.07		
	EXTENDED 4-WIRE 56 KBPS DIGITAL EXTENDED LOOP WITH 56 KBPS INTEROFFICE TRANSPORT																
		4-wire 56 kbps Local Loop in combination - Zone 1		1	UNCDX	UDL56	25.32	489.04	337.51								
		4-wire 56 kbps Local Loop in combination - Zone 2		2	UNCDX	UDL56	43.11	489.04	337.51								
		4-wire 56 kbps Local Loop in combination - Zone 3		3	UNCDX	UDL56	67.26	489.04	337.51								
		Interoffice Transport - Dedicated - 4-wire 56 kbps combination - Per Mile per month			UNCDX	1L5XX	0.0282										
		Interoffice Transport - Dedicated - 4-wire 56 kbps combination - Facility Termination per month			UNCDX	U1TD5	17.40	137.48	52.58					38.07	38.07		
		Nonrecurring Currently Combined Network Elements Switch -As-Is Charge			UNCDX	UNCCC		21.75	21.75	32.28	10.96			38.07	38.07		
	EXTENDED 4-WIRE 64 KBPS DIGITAL EXTENDED LOOP WITH 64 KBPS INTEROFFICE TRANSPORT																
		4-wire 64 kbps Lcoal Loop in Combination - Zone 1		1	UNCDX	UDL64	25.32	489.04	337.51								
		4-wire 64 kbps Lcoal Loop in Combination - Zone 2		2	UNCDX	UDL64	43.11	489.04	337.51								
		4-wire 64 kbps Lcoal Loop in Combination - Zone 3		3	UNCDX	UDL64	67.26	489.04	337.51								
		Interoffice Transport - Dedicated - 4-wire 64 kbps combination - Per Mile per month			UNCDX	1L5XX	0.0282										
		Interoffice Transport - Dedicated - 4-wire 64 kbps combination - Facility Termination per month			UNCDX	U1TD6	17.40	137.48	52.58					38.07	38.07		
		Nonrecurring Currently Combined Network Elements Switch -As-Is Charge			UNCDX	UNCCC		21.75	21.75	32.28	10.96			38.07	38.07		
	EXTENDED 2-WIRE VOICE GRADE LOOP WITH DS1 INTEROFFICE TRANSPORT w/ 3/1 MUX																
		First 2-wire VG Loop (SL2) in Combination - Zone 1		1	UNCVX	UEAL2	14.97	142.97	106.56					38.07	38.07		
		First 2-wire VG Loop (SL2) in Combination - Zone 2		2	UNCVX	UEAL2	25.93	142.97	106.56					38.07	38.07		
		First 2-wire VG Loop (SL2) in Combination - Zone 3		3	UNCVX	UEAL2	40.81	142.97	106.56					38.07	38.07		
		First Interoffice Transport - Dedicated - DS1 combination - Per Mile			UNC1X	1L5XX	0.5753										
		First Interoffice Transport - Dedicated - DS1 combination - Facility Termination per month			UNC1X	U1TF1	71.29	217.17	163.75					38.07	38.07		
		Per each DS1 Channelization System Per Month			UNC1X	MQ1	146.69	197.78	140.06								
		Per each Voice Grade COCI - Per Month per month			UNCVX	1D1VG	1.27	13.09	9.38								
		3/1 Channel System in combination per month			UNC3X	MQ3	233.10	403.97	234.40								
		Per each DS1 COCI in combination per month			UNC1X	UC1D1	16.07	13.09	9.38								
		Each Additional 2-Wire VG Loop(SL 2) in the same DS1 Interoffice Transport Combination - Zone 1		1	UNCVX	UEAL2	14.97	142.97	106.56					38.07	38.07		
		Each Additional 2-Wire VG Loop(SL2) in the same DS1 Interoffice Transport Combination - Zone 2		2	UNCVX	UEAL2	25.93	142.97	106.56					38.07	38.07		
		Each Additional 2-Wire VG Loop(SL2) in the same DS1 Interoffice Transport Combination - Zone 3		3	UNCVX	UEAL2	40.81	142.97	106.56					38.07	38.07		
		Each Additional Voice Grade COCI in combination - per month			UNCVX	1D1VG	1.27	13.09	9.38								
		Each Additional DS1 Interoffice Channel per mile in same 3/1 Channel System per month			UNC1X	1L5XX	0.5753										
		Each Additional DS1 Interoffice Channel Facility Termination in same 3/1 Channel System per month			UNC1X	U1TF1	71.29	217.17	163.75					38.07	38.07		
		Each Additional DS1 COCI combination per month			UNC1X	UC1D1	16.07	13.09	9.38								

UNBUNDLED NETWORK ELEMENTS - North Carolina														Attachment: 2		Exhibit: A	
CATEGORY		RATE ELEMENTS	Interim	Zone	BCS	USOC	RATES ($)					Svc Order Submitted Elec per LSR	Svc Order Submitted Manually per LSR	Incremental Charge - Manual Svc Order vs. Electronic-1st	Incremental Charge - Manual Svc Order vs. Electronic-Add'l	Incremental Charge - Manual Svc Order vs. Electronic-Disc 1st	Incremental Charge - Manual Svc Order vs. Electronic-Disc Add'l
							Rec	Nonrecurring		Nonrecurring Disconnect		OSS Rates ($)					
								First	Add'l	First	Add'l	SOMEC	SOMAN	SOMAN	SOMAN	SOMAN	SOMAN
		Nonrecurring Currently Combined Network Elements Switch -As-Is Charge			UNC1X	UNCCC		21.75	21.75	32.28	10.96			38.07	38.07		
	EXTENDED 4-WIRE VOICE GRADE LOOP WITH DEDICATED DS1 INTEROFFICE TRANSPORT w/ 3/1 MUX																
		First 4-Wire Analog Voice Grade Local Loop in Combination - Zone 1		1	UNCVX	UEAL4	21.32	288.47	237.45					38.07	38.07		
		First 4-Wire Analog Voice Grade Local Loop in Combination - Zone 2		2	UNCVX	UEAL4	36.27	288.47	237.45					38.07	38.07		
		First 4-Wire Analog Voice Grade Local Loop in Combination - Zone 3		3	UNCVX	UEAL4	56.57	288.47	237.45					38.07	38.07		
		First Interoffice Transport - Dedicated - DS1 combination - Per Mile Per Month			UNC1X	1L5XX	0.5753										
		First Interoffice Transport - Dedicated - DS1 - Facility Termination Per Month			UNC1X	U1TF1	71.29	217.17	163.75					38.07	38.07		
		Per each 1/0 Channel System in combination Per Month			UNC1X	MQ1	146.69	197.78	140.06								
		Per each Voice Grade COCI in combination - per month			UNCVX	1D1VG	1.27	13.09	9.38								
		3/1 Channel System in combination per month			UNC3X	MQ3	233.10	403.97	234.40								
		Per each DS1 COCI in combination per month			UNC1X	UC1D1	16.07	13.09	9.38								
		Additional 4-Wire Analog Voice Grade Loop in same DS1 Interoffice Transport Combination - Zone 1		1	UNCVX	UEAL4	21.32	288.47	237.45					38.07	38.07		
		Additional 4-Wire Analog Voice Grade Loop in same DS1 Interoffice Transport Combination - Zone 2		2	UNCVX	UEAL4	36.27	288.47	237.45					38.07	38.07		
		Additional 4-Wire Analog Voice Grade Loop in same DS1 Interoffice Transport Combination - Zone 3		3	UNCVX	UEAL4	56.57	288.47	237.45					38.07	38.07		
		Each Additional DS1 Interoffice Channel per mile in same 3/1 Channel System per month			UNC1X	1L5XX	0.5753										
		Each Additional DS1 Interoffice Channel Facility Termination in same 3/1 Channel System per month			UNC1X	U1TF1	71.29	217.17	163.75					38.07	38.07		
		Additional Voice Grade COCI - in combination - per month			UNCVX	1D1VG	1.27	13.09	9.38								
		Nonrecurring Currently Combined Network Elements Switch -As-Is Charge			UNC1X	UNCCC		21.75	21.75	32.28	10.96			38.07	38.07		
	EXTENDED 4-WIRE 56 KBPS DIGITAL LOOP WITH DEDICATED DS1 INTEROFFICE TRANSPORT w/ 3/1 MUX																
		First 4-Wire 56Kbps Digital Grade Local Loop in Combination - Zone 1		1	UNCDX	UDL56	25.32	489.04	337.51					38.07	38.07		
		First 4-Wire 56Kbps Digital Grade Local Loop in Combination - Zone 2		2	UNCDX	UDL56	43.11	489.04	337.51					38.07	38.07		
		First 4-Wire 56Kbps Digital Grade Local Loop in Combination - Zone 3		3	UNCDX	UDL56	67.26	489.04	337.51					38.07	38.07		
		First Interoffice Transport - Dedicated - DS1 combination - Per Mile Per Month			UNC1X	1L5XX	0.5753										
		First Interoffice Transport - Dedicated - DS1 - combination Facility Termination Per Month			UNC1X	U1TF1	71.29	217.17	163.75					38.07	38.07		
		Per each 1/0 Channel System in combination Per Month			UNC1X	MQ1	146.69	197.78	140.06								
		Per each OCU-DP COCI (data) COCI per month (2.4-64kbs)			UNCDX	1D1DD	2.00	15.76	11.28								
		3/1 Channel System in combination per month			UNC3X	MQ3	233.10	403.97	234.40								
		Per each DS1 COCI in combination per month			UNC1X	UC1D1	16.07	13.09	9.38								
		Additional 4-Wire 56Kbps Digital Grade Loop in same DS1 Interoffice Transport Combination - Zone 1		1	UNCDX	UDL56	25.32	489.04	337.51					38.07	38.07		
		Additional 4-Wire 56Kbps Digital Grade Loop in same DS1 Interoffice Transport Combination - Zone 2		2	UNCDX	UDL56	43.11	489.04	337.51					38.07	38.07		
		Additional 4-Wire 56Kbps Digital Grade Loop in same DS1 Interoffice Transport Combination - Zone 3		3	UNCDX	UDL56	67.26	489.04	337.51					38.07	38.07		
		OCU-DP COCI (data) COCI in combination per month (2.4-64kbs)			UNCDX	1D1DD	2.00	15.76	11.28								
		Each Additional DS1 Interoffice Channel per mile in same 3/1 Channel System per month			UNC1X	1L5XX	0.5753										
		Each Additional DS1 Interoffice Channel Facility Termination in same 3/1 Channel System per month			UNC1X	U1TF1	71.29	217.17	163.75					38.07	38.07		
		Each Additional DS1 COCI in the same 3/1 channel system combination per month			UNC1X	UC1D1	16.07	13.09	9.38								

UNBUNDLED NETWORK ELEMENTS - North Carolina														Attachment: 2		Exhibit: A	
CATEGORY		RATE ELEMENTS	Interim	Zone	BCS	USOC	RATES ($)					Svc Order Submitted Elec per LSR	Svc Order Submitted Manually per LSR	Incremental Charge - Manual Svc Order vs. Electronic-1st	Incremental Charge - Manual Svc Order vs. Electronic-Add'l	Incremental Charge - Manual Svc Order vs. Electronic-Disc 1st	Incremental Charge - Manual Svc Order vs. Electronic-Disc Add'l
							Rec	Nonrecurring		Nonrecurring Disconnect		OSS Rates ($)					
								First	Add'l	First	Add'l	SOMEC	SOMAN	SOMAN	SOMAN	SOMAN	SOMAN
		Nonrecurring Currently Combined Network Elements Switch -As-Is Charge			UNC1X	UNCCC		21.75	21.75	32.28	10.96			38.07	38.07		
	EXTENDED 4-WIRE 64 KBPS DIGITAL LOOP WITH DEDICATED DS1 INTEROFFICE TRANSPORT w/ 3/1 MUX																
		First 4-Wire 64Kbps Digital Grade Loop in a DS1 Interoffice Transport Combination - Zone 1		1	UNCDX	UDL64	25.32	489.04	337.51					38.07	38.07		
		First 4-Wire 64Kbps Digital Grade Loop in a DS1 Interoffice Transport Combination - Zone 2		2	UNCDX	UDL64	43.11	489.04	337.51					38.07	38.07		
		First 4-Wire 64Kbps Digital Grade Loop in a DS1 Interoffice Transport Combination - Zone 3		3	UNCDX	UDL64	67.26	489.04	337.51					38.07	38.07		
		First Interoffice Transport - Dedicated - DS1 combination - Per Mile Per Month			UNC1X	1L5XX	0.5753										
		First Interoffice Transport - Dedicated - DS1 combination - Facility Termination Per Month			UNC1X	U1TF1	71.29	217.17	163.75					38.07	38.07		
		Per each Channel System 1/0 in combination Per Month			UNC1X	MQ1	146.69	197.78	140.06								
		Per each OCU-DP COCI (data) in combination - per month (2.4-64kbs)			UNCDX	1D1DD	2.00	15.76	11.28								
		3/1 Channel System in combination per month			UNC3X	MQ3	233.10	403.97	234.40								
		Per each DS1 COCI in combination per month			UNC1X	UC1D1	16.07	13.09	9.38								
		Additional 4-Wire 64Kbps Digital Grade Loop in same DS1 Interoffice Transport Combination - Zone 1		1	UNCDX	UDL64	25.32	489.04	337.51					38.07	38.07		
		Additional 4-Wire 64Kbps Digital Grade Loop in same DS1 Interoffice Transport Combination - Zone 2		2	UNCDX	UDL64	43.11	489.04	337.51					38.07	38.07		
		Additional 4-Wire 64Kbps Digital Grade Loop in same DS1 Interoffice Transport Combination - Zone 3		3	UNCDX	UDL64	67.26	489.04	337.51					38.07	38.07		
		Additional OCU-DP COCI (data) - DS1 to DS0 Channel System combination - per month (2.4-64kbs)			UNCDX	1D1DD	2.00	15.76	11.28								
		Each Additional DS1 Interoffice Channel per mile in same 3/1 Channel System per month			UNC1X	1L5XX	0.5753										
		Each Additional DS1 Interoffice Channel Facility Termination in same 3/1 Channel System per month			UNC1X	U1TF1	71.29	217.17	163.75					38.07	38.07		
		Each Additional DS1 COCI in the same 3/1 channel system combination per month			UNC1X	UC1D1	16.07	13.09	9.38								
		Nonrecurring Currently Combined Network Elements Switch -As-Is Charge			UNC1X	UNCCC		21.75	21.75	32.28	10.96			38.07	38.07		
	EXTENDED 2-WIRE ISDN LOOP WITH DS1 INTEROFFICE TRANSPORT w/ 3/1 MUX																
		First 2-Wire ISDN Loop in a DS1 Interoffice Combination Transport - Zone 1		1	UNCNX	U1L2X	19.42	325.91	251.31					38.07	38.07		
		First 2-Wire ISDN Loop in a DS1 Interoffice Combination Transport - Zone 2		2	UNCNX	U1L2X	32.88	325.91	251.31					38.07	38.07		
		First 2-Wire ISDN Loop in a DS1 Interoffice Combination Transport - Zone 3		3	UNCNX	U1L2X	51.14	325.91	251.31					38.07	38.07		
		First Interoffice Transport - Dedicated - DS1 combination - Per Mile per month			UNC1X	1L5XX	0.5753										
		First Interoffice Transport - Dedicated - DS1 combination - Facility Termination per month			UNC1X	U1TF1	71.29	217.17	163.75					38.07	38.07		
		Per each Channel System 1/0 in combination - per month			UNC1X	MQ1	146.69	197.78	140.06								
		Per each 2-wire ISDN COCI (BRITE) in combination - per month			UNCNX	UC1CA	3.59	15.76	11.28								
		3/1 Channel System in combination per month			UNC3X	MQ3	233.10	403.97	234.40								
		Per each DS1 COCI in combination per month			UNC1X	UC1D1	16.07	13.09	9.38								
		Additional 2-wire ISDN Loop in same DS1Interoffice Transport Combination - Zone 1		1	UNCNX	U1L2X	19.42	325.91	251.31					38.07	38.07		
		Additional 2-wire ISDN Loop in same DS1Interoffice Transport Combination - Zone 2		2	UNCNX	U1L2X	32.88	325.91	251.31					38.07	38.07		
		Additional 2-wire ISDN Loop in same DS1Interoffice Transport Combination - Zone 3		3	UNCNX	U1L2X	51.14	325.91	251.31					38.07	38.07		
		Additional 2-wire ISDN COCI (BRITE) in same 1/0 channel system combination- per month			UNCNX	UC1CA	3.59	15.76	11.28								

UNBUNDLED NETWORK ELEMENTS - North Carolina														Attachment: 2		Exhibit: A	
CATEGORY		RATE ELEMENTS	Interim	Zone	BCS	USOC	RATES ($)					Svc Order Submitted Elec per LSR	Svc Order Submitted Manually per LSR	Incremental Charge - Manual Svc Order vs. Electronic-1st	Incremental Charge - Manual Svc Order vs. Electronic-Add'l	Incremental Charge - Manual Svc Order vs. Electronic-Disc 1st	Incremental Charge - Manual Svc Order vs. Electronic-Disc Add'l
							Rec	Nonrecurring		Nonrecurring Disconnect		OSS Rates ($)					
								First	Add'l	First	Add'l	SOMEC	SOMAN	SOMAN	SOMAN	SOMAN	SOMAN
		Each Additional DS1 Interoffice Channel per mile in same 3/1 Channel System per month			UNC1X	1L5XX	0.5753										
		Each Additional DS1 Interoffice Channel Facility Termination in same 3/1 Channel System per month			UNC1X	U1TF1	71.29	217.17	163.75					38.07	38.07		
		Each Additional DS1 COCI in the same 3/1 channel system combination per month			UNC1X	UC1D1	16.07	13.09	9.38								
		Nonrecurring Currently Combined Network Elements Switch -As-Is Charge			UNC1X	UNCCC		21.75	21.75	32.28	10.96			38.07	38.07		
	EXTENDED 4-WIRE DS1 LOOP WITH DEDICATED DS1 INTEROFFICE TRANSPORT w/ 3/1 MUX																
		First 4-wire DS1 Digital Lcoal Loop in Combination - Zone 1		1	UNC1X	USLXX	47.60	714.84	421.47					38.07	38.07		
		First 4-wire DS1 Digital Lcoal Loop in Combination - Zone 2		2	UNC1X	USLXX	84.36	714.84	421.47					38.07	38.07		
		First 4-wire DS1 Digital Lcoal Loop in Combination - Zone 3		3	UNC1X	USLXX	134.29	714.84	421.47					38.07	38.07		
		First Interoffice Transport - Dedicated - DS1 combination - Per Mile Per Month			UNC1X	1L5XX	0.5753										
		First Interoffice Transport - Dedicated - DS1 combination - Facility Termination Per Month			UNC1X	U1TF1	71.29	217.17	163.75					38.07	38.07		
		3/1 Channel System in combination per month			UNC3X	MQ3	233.10	403.97	234.40								
		Per each DS1 COCI combination per month			UNC1X	UC1D1	16.07	13.09	9.38								
		Each Additional DS1 Interoffice Channel per mile in same 3/1 Channel System per month			UNC1X	1L5XX	0.5753										
		Each Additional DS1 Interoffice Channel Facility Termination in same 3/1 Channel System per month			UNC1X	U1TF1	71.29	217.17	163.75					38.07	38.07		
		Each Additional DS1 COCI in the same 3/1 channel system combination per month			UNC1X	UC1D1	16.07	13.09	9.38								
		Additional 4-Wire DS1 Digital Local Loop in Combination - Zone 1		1	UNC1X	USLXX	47.60	714.84	421.47					38.07	38.07		
		Additional 4-Wire DS1 Digital Local Loop in Combination - Zone 2		2	UNC1X	USLXX	84.36	714.84	421.47					38.07	38.07		
		Additional 4-Wire DS1 Digital Local Loop in Combination - Zone 3		3	UNC1X	USLXX	134.29	714.84	421.47					38.07	38.07		
		Nonrecurring Currently Combined Network Elements Switch -As-Is Charge			UNC1X	UNCCC		21.75	21.75	32.28	10.96			38.07	38.07		
	EXTENDED 4-WIRE 56 KBPS DIGITAL EXTENDED LOOP WITH DS0 INTEROFFICE TRANSPORT																
		First 4-wire 56 kbps Local Loop in combination - Zone 1		1	UNCDX	UDL56	25.32	489.04	337.51								
		First 4-wire 56 kbps Local Loop in combination - Zone 2		2	UNCDX	UDL56	43.11	489.04	337.51								
		First 4-wire 56 kbps Local Loop in combination - Zone 3		3	UNCDX	UDL56	67.26	489.04	337.51								
		First 4-wiree 56 kbps Interoffice Transport - Dedicated - Per Mile per month			UNCDX	1L5XX	0.0282										
		First 4-wire 56 kbps Interoffice Transport - Dedicated - Facility Termination per month			UNCDX	U1TD5	17.40	137.48	52.58					38.07	38.07		
		Nonrecurring Currently Combined Network Elements Switch -As-Is Charge			UNCDX	UNCCC		21.75	21.75	32.28	10.96			38.07	38.07		
	EXTENDED 4-WIRE 64 KBPS DIGITAL EXTENDED LOOP WITH DS0 INTEROFFICE TRANSPORT																
		First 4-wire 64 kbps Local Loop in combination - Zone 1		1	UNCDX	UDL64	25.32	489.04	337.51								
		First 4-wire 64 kbps Local Loop in combination - Zone 2		2	UNCDX	UDL64	43.11	489.04	337.51								
		First 4-wire 64 kbps Local Loop in combination - Zone 3		3	UNCDX	UDL64	67.26	489.04	337.51								
		First I4-wire 65 kbps Interoffice Transport - Dedicated - Per Mile per month			UNCDX	1L5XX	0.0282										
		First 4-wire 64 kbps Interoffice Transport - Dedicated - Facility Termination per month			UNCDX	U1TD6	17.40	137.48	52.58					38.07	38.07		
		Nonrecurring Currently Combined Network Elements Switch -As-Is Charge			UNCDX	UNCCC		21.75	21.75	32.28	10.96			38.07	38.07		
ADDITIONAL NETWORK ELEMENTS																	
	When used as a part of a currently combined facility, the non-recurrng charges do not apply, but a Switch As Is charge does apply.																
	When used as ordinarily combined network elements in All States, the non-recurring charges apply and the Switch As Is Charge does not.																
	Nonrecurring Currently Combined Network Elements "Switch As Is" Charge (One applies to each combination)																
		Nonrecurring Currently Combined Network Elements Switch -As-Is Charge - 2 wire/4-Wire VG			UNCVX	UNCCC		21.75	21.75	32.28	10.96			26.94	12.76		

UNBUNDLED NETWORK ELEMENTS - North Carolina														Attachment: 2		Exhibit: A	
CATEGORY		RATE ELEMENTS	Interim	Zone	BCS	USOC	RATES ($)					Svc Order Submitted Elec per LSR	Svc Order Submitted Manually per LSR	Incremental Charge - Manual Svc Order vs. Electronic-1st	Incremental Charge - Manual Svc Order vs. Electronic-Add'l	Incremental Charge - Manual Svc Order vs. Electronic-Disc 1st	Incremental Charge - Manual Svc Order vs. Electronic-Disc Add'l
							Rec	Nonrecurring		Nonrecurring Disconnect		OSS Rates ($)					
								First	Add'l	First	Add'l	SOMEC	SOMAN	SOMAN	SOMAN	SOMAN	SOMAN
		Nonrecurring Currently Combined Network Elements Switch -As-Is Charge - 56/64 kbps			UNCDX	UNCCC		21.75	21.75	32.28	10.96			26.94	12.76		
		Nonrecurring Currently Combined Network Elements Switch -As-Is Charge - DS1			UNC1X	UNCCC		21.75	21.75	32.28	10.96			26.94	12.76		
		Nonrecurring Currently Combined Network Elements Switch -As-Is Charge - DS3			UNC3X	UNCCC		21.75	21.75	32.28	10.96			26.94	12.76		
		Nonrecurring Currently Combined Network Elements Switch -As-Is Charge - STS1			UNCSX	UNCCC		21.75	21.75	32.28	10.96			26.94	12.76		
	Optional Features & Functions:																
		Clear Channel Capability Extended Frame Option - per DS1	I		U1TD1, ULDD1,UNC1X	CCOEF		0I	0I	0I	0I						
		Clear Channel Capability Super FrameOption - per DS1	I		U1TD1, ULDD1,UNC1X	CCOSF		0I	0I	0I	0I						
		Clear Channel Capability (SF/ESF) Option - Subsequent Activity - per DS1	I		ULDD1, U1TD1, UNC1X, USL	NRCCC		184.76S	23.8S	1.99S	0.78S			26.94	12.76		
		C-bit Parity Option - Subsequent Activity - per DS3	i		U1TD3, ULDD3, UE3, UNC3X	NRCC3		218.92S	7.66S	.7576S	0S			26.94	12.76		
	MULTIPLEXERS																
		DS1 to DS0 Channel System per month			UNC1X	MQ1	146.69	197.78	140.06					26.94	12.76		
		OCU-DP COCI (data) - DS1 to DS0 Channel System - per month (2.4-64kbs) used for a Local Loop			UDL	1D1DD	2.00	13.09	9.38								
		OCU-DP COCI (data) - DS1 to DS0 Channel System - per month (2.4-64kbs) used for connection to a channelized DS1 Local Channel in the same SWC as collocation			U1TUD	1D1DD	2.00	13.09	9.38								
		2-wire ISDN COCI (BRITE) - DS1 to DS0 Channel Systsem - per month for a Local Loop			UDN	UC1CA	3.59	13.09	9.38								
		2-wire ISDN COCI (BRITE) - DS1 to DS0 Channel Systsem - per month used for connection to a channelized DS1 Local Channel in the same SWC as collocation			U1TUB	UC1CA	3.59	13.09	9.38								
		Voice Grade COCI - DS1 to DS0 Channel System - per month used for a Local Loop			UEA	1D1VG	1.27	13.09	9.38								
		Voice Grade COCI - DS1 to DS0 Channel System - per month used for connection to a channelized DS1 Local Channel in the same SWC as collocation			U1TUC	1D1VG	1.27	13.09	9.38								
		DS3 to DS1 Channel System per month			UNC3X	MQ3	233.10	403.97	234.40					26.94	12.76		
		STS-1 to DS1 Channel System per month			UNCSX	MQ3	233.10	403.97	234.40					26.94	12.76		
		DS1 COCI used with Loop per month			USL	UC1D1	16.07	13.09	9.38								
		DS1 COCI (used for connection to a channelized DS1 Local Channel in the same SWC as collocation) per month			U1TUA	UC1D1	16.07	13.09	9.38								
		DS1 COCI used with Interoffice Channel per month			U1TD1	UC1D1	16.07	13.09	9.38								
		DS3 Interface Unit (DS1 COCI) used with Local Channel per month			ULDD1	UC1D1	16.07	13.09	9.38								
														26.94	12.76		
														26.94	12.76		
UNBUNDLED LOCAL EXCHANGE SWITCHING(PORTS)																	
	Exchange Ports																
	NOTE: Although the Port Rate includes all available features in GA, KY, LA & TN, the desired features will need to be ordered using retail USOCs																
	2-WIRE VOICE GRADE LINE PORT RATES (RES)																
		Exchange Ports - 2-Wire Analog Line Port- Res.			UEPSR	UEPRL	2.19	21.60	21.60					26.94	12.76		
		Exchange Ports - 2-Wire Analog Line Port with Caller ID - Res.			UEPSR	UEPRC	2.19	21.60	21.60					26.94	12.76		
		Exchange Ports - 2-Wire Analog Line Port outgoing only - Res.			UEPSR	UEPRO	2.19	21.60	21.60					26.94	12.76		
		Exchange Ports - 2-Wire VG unbundled res, low usage line port with Caller ID (LUM)			UEPSR	UEPAP	2.19	21.60	21.60					26.94	12.76		
		2-Wire voice unbundled Low Usage Line Port without Caller ID Capability			UEPSR	UEPRT	2.19	21.60	21.60					26.94	12.76		
		2-Wire Voice Grade Unbundled Port without Caller ID capability, North Carolina			UEPSR	UEPRZ	2.19	21.60	21.60								

UNBUNDLED NETWORK ELEMENTS - North Carolina														Attachment: 2		Exhibit: A	
CATEGORY	RATE ELEMENTS	Interim	Zone	BCS	USOC	RATES ($)					Svc Order Submitted Elec per LSR	Svc Order Submitted Manually per LSR	Incremental Charge - Manual Svc Order vs. Electronic-1st	Incremental Charge - Manual Svc Order vs. Electronic-Add'l	Incremental Charge - Manual Svc Order vs. Electronic-Disc 1st	Incremental Charge - Manual Svc Order vs. Electronic-Disc Add'l
						Rec	Nonrecurring		Nonrecurring Disconnect		OSS Rates ($)					
							First	Add'l	First	Add'l	SOMEC	SOMAN	SOMAN	SOMAN	SOMAN	SOMAN
	2-Wire Voice Grade Unbundled Port with Caller ID capability, North Carolina			UEPSR	UEPRY	2.19	21.60	21.60								
	Subsequent Activity			UEPSR	USASC	0.00	0.00	0.00					26.94	12.76		
FEATURES																
	All Available Vertical Features			UEPSR	UEPVF	3.40	0.00	0.00					26.94	12.76		
2-WIRE VOICE GRADE LINE PORT RATES (BUS)																
	Exchange Ports - 2-Wire Analog Line Port without Caller ID - Bus			UEPSB	UEPBL	2.19	21.60	21.60					26.94	12.76		
	Exchange Ports - 2-Wire VG unbundled Line Port with unbundled port with Caller+E484 ID - Bus.			UEPSB	UEPBC	2.19	21.60	21.60					26.94	12.76		
	Exchange Ports - 2-Wire Analog Line Port outgoing only - Bus.			UEPSB	UEPBO	2.19	21.60	21.60					26.94	12.76		
	Exhange Ports - 2-Wire VG unbundled incoming only port with Caller ID - Bus			UEPSB	UEPB1	2.19	21.60	21.60					26.94	12.76		
	2-Wire voice unbundled Incoming Only Port without Caller ID Capability			UEPSB	UEPBE	2.19	21.60	21.60					26.94	12.76		
	Subsequent Activity			UEPSB	USASC	0.00	0.00	0.00								
FEATURES																
	All Available Vertical Features			UEPSB	UEPVF	3.40	0.00	0.00					26.94	12.76		
EXCHANGE PORT RATES (DID & PBX)																
	2-Wire VG Unbundled 2-Way PBX Trunk - Res			UEPSE	UEPRD	2.18	21.60	21.60					26.94	12.76		
	2-Wire VG Line Side Unbundled 2-Way PBX Trunk - Bus			UEPSP	UEPPC	2.18	21.60	21.60					26.94	12.76		
	2-Wire VG Line Side Unbundled Outward PBX Trunk - Bus			UEPSP	UEPPO	2.18	21.60	21.60					26.94	12.76		
	2-Wire VG Line Side Unbundled Incoming PBX Trunk - Bus			UEPSP	UEPP1	2.18	21.60	21.60					26.94	12.76		
	2-Wire Analog Long Distance Terminal PBX Trunk - Bus			UEPSP	UEPLD	2.18	21.60	21.60					26.94	12.76		
	2-Wire Voice Unbundled PBX LD Terminal Ports			UEPSP	UEPLD	2.18	21.60	21.60					26.94	12.76		
	2-Wire Vice Unbundled 2-Way PBX Usage Port			UEPSP	UEPXA	2.18	21.60	21.60					26.94	12.76		
	2-Wire Voice Unbundled PBX Toll Terminal Hotel Ports			UEPSP	UEPXB	2.18	21.60	21.60					26.94	12.76		
	2-Wire Voice Unbundled PBX LD DDD Terminals Port			UEPSP	UEPXC	2.18	21.60	21.60					26.94	12.76		
	2-Wire Voice Unbundled PBX LD Terminal Switchboard Port			UEPSP	UEPXD	2.18	21.60	21.60					26.94	12.76		
	2-Wire Voice Unbundled PBX LD Terminal Switchboard IDD Capable Port			UEPSP	UEPXE	2.18	21.60	21.60					26.94	12.76		
	2-Wire Voice Unbundled 2-Way PBX Hotel/Hospital Economy Administrative Calling Port			UEPSP	UEPXL	2.18	21.60	21.60					26.94	12.76		
	2-Wire Voice Unbundled 2-Way PBX Hotel/Hospital Economy Room Calling Port			UEPSP	UEPXM	2.18	21.60	21.60					26.94	12.76		
	2-Wire Voice Unbundled 1-Way Outgoing PBX Hotel/Hospital Discount Room Calling Port			UEPSP	UEPXO	2.18	21.60	21.60					26.94	12.76		
	2-Wire Voice Unbundled 1-Way Outgoing PBX Measured Port			UEPSP	UEPXS	2.18	21.60	21.60					26.94	12.76		
	Subsequent Activity			UEPSP	USASC	0.00	0.00	0.00					26.94	12.76		
FEATURES																
	All Available Vertical Features			UEPSP UEPSE	UEPVF	3.40	0.00	0.00					26.94	12.76		
EXCHANGE PORT RATES (COIN)																
	Exchange Ports - Coin Port					2.59	21.60	21.60					26.94	12.76		
NOTE: Transmission/usage charges associated with POTS circuit switched usage will also apply to circuit switched voice and/or circuit switched data transmission by B-Channels associated with 2-wire ISDN ports.																
NOTE: Access to B Channel or D Channel Packet capabilities will be available only through BFR/New Business Request Process. Rates for the packet capabilities will be determined via the Bona Fide Request/New Business Request Process.																
UNBUNDLED LOCAL EXCHANGE SWITCHING(PORTS)																
EXCHANGE PORT RATES																
The DS1 Port rates below for 4-Wire DDITS Trunk Port and 4-Wire ISDN Port in this rate exhibit apply to the embedded base in place as of 10/2/03 until 4/1/04. After 4/1/04 these rates shall revert to tariff rates or a separate agreement.																
Requests for 4-Wire DDITS Trunk Ports with 4-Wire ISDN DS1 Ports after the effective date of this amendment shall be provided pursuant to a separate agreement or tariff at BellSouth's discretion.																
	Exchange Ports - 2-Wire DID Port			UEPEX	UEPP2	12.36	81.84	81.84					26.94	12.76		
	Exchange Ports - DDITS Port - 4-Wire DS1 Port with DID capability (E:4/1/2004)			UEPDD	UEPDD	123.65	116.59	69.92					26.94	12.76		
	Exchange Ports - 2-Wire ISDN Port (See Notes below.)			UEPTX, UEPSX	U1PMA	24.50	62.29	62.29					55.30	55.30		
	All Features Offered			UEPTX, UEPSX	UEPVF	3.40	0.00	0.00								
	Exchange Ports - 2-Wire ISDN Port -- Channel Profiles			UEPTX, UEPSX	U1UMA	0.00	0.00	0.00								
NOTE: Transmission/usage charges associated with POTS circuit switched usage will also apply to circuit switched voice and/or circuit switched data transmission by B-Channels associated with 2-wire ISDN ports.																
NOTE: Access to B Channel or D Channel Packet capabilities will be available only through BFR/New Business Request Process. Rates for the packet capabilities will be determined via the Bona Fide Request/New Business Request Process.																
EXCHANGE PORT RATES (continued)																

UNBUNDLED NETWORK ELEMENTS - North Carolina														Attachment: 2		Exhibit: A	
CATEGORY		RATE ELEMENTS	Interim	Zone	BCS	USOC	RATES ($)					Svc Order Submitted Elec per LSR	Svc Order Submitted Manually per LSR	Incremental Charge - Manual Svc Order vs. Electronic-1st	Incremental Charge - Manual Svc Order vs. Electronic-Add'l	Incremental Charge - Manual Svc Order vs. Electronic-Disc 1st	Incremental Charge - Manual Svc Order vs. Electronic-Disc Add'l
							Rec	Nonrecurring		Nonrecurring Disconnect		OSS Rates ($)					
								First	Add'l	First	Add'l	SOMEC	SOMAN	SOMAN	SOMAN	SOMAN	SOMAN
		Exchange Ports - 4-Wire ISDN DS1 Port with Detailed E911 Locator Capability (E:4/1/2004)			UEPEX	UEPEX	179.75	241.63	241.63					53.89	53.89		
		Exchange Ports - 4-Wire ISDN DS1 Port (E:4/1/2004)			UEPDX	UEPDX	179.75	241.63	241.63					53.89	53.89		
		Physical Collocation - DS1 Cross-Connects	I		UEPEX UEPDX	PE1P1	2.34	71.02	51.08					26.94	12.76		
		Virtual collocation - Special Access & UNE, cross-connect per DS1			UEPEX UEPDX	CNC1X	0.97	71.02	51.08					26.94	12.76		
	Detailed E911 with Locator Capability (required with UEPEX port)																
		Unbundled Exchange Ports, 4-Wire ISDN DS1 Port - E911 Locator Capability - Initial Profile Establishment per CLEC per State			UEPEX	UEP1A	0.00	1,802.00						26.94	12.76		
		Unbundled Exchange Ports, 4-Wire ISDN DS1 Port - E911 Locator Capability - Subsequent Profile Changes, Additions, Deletions			UEPEX	UEP1B	0.00	174.99						26.94	12.76		
	New or Additional PRI Telephone Numbers																
		Unbundled Exchange Ports, 4-Wire ISDN DS1 Port - E911 Locator Capability 2-way Telephone Numbers, per number in E911 profile [New or Additional]			UEPEX	UEP1C		1.17	1.17					26.94	12.76		
		Unbundled Exchange Ports, 4-Wire ISDN DS1 Port - E911 Locator Capability - Outdial Telephone Numbers, per number in E911 profile [New or Additional]			UEPEX	UEP1D		28.17	28.17					26.94	12.76		
		Unbundled Exchange Ports, 4-Wire ISDN DS1 Port - Inward Telephone Numbers - Inward Data Only Option [New or Additional]			UEPDX	UEP1E	0.00	1.17	1.17					26.94	12.76		
		Exchange Ports - 4-Wire ISDN DS1 Port - Subsequent [New] Inward Tel Numbers [Customer Testing Purposes]			UEPEX	PR7ZT	0.00	56.33	56.33					26.94	12.76		
	LOCAL NUMBER PORTABILITY																
		Local Number Portability (1 per port)			UEPEX UEPDX	LNPCN	1.75										
	INTERFACE (Provsioning Only)																
		Voice/Data			UEPEX	PR71V	0.00	0.00	0.00					26.94	12.76		
		Digital Data			UEPEX	PR71D	0.00	0.00	0.00					26.94	12.76		
		Inward Data			UEPDX	PR71E	0.00	0.00	0.00					26.94	12.76		
	New or Additional Channel																
		New or Additional - Voice/Data "B" Channel			UEPEX	PR7BV	0.00	36.92						26.94	12.76		
		New or Additional - Digital Data "B" Channel			UEPEX	PR7BF	0.00	36.92						26.94	12.76		
		New or Additional Inward Data "B" Channel			UEPDX	PR7BD	0.00	36.92						26.94	12.76		
		New or Additional Useage Sensitive Voice Data "B" Channel			UEPEX	PR7BS	0.00							26.94	12.76		
		New or Additional Useage Sensitive Digital Data "B" Channel			UEPEX	PR7BU	0.00							26.94	12.76		
		New or Additional PRI "D" Channel			UEPEX	PR7EX	0.00	36.92						26.94	12.76		
	CALL TYPES																
		Inward			UEPEX UEPDX	PR7C1	0.00	0.00	0.00					26.94	12.76		
		Outward			UEPEX	PR7CO	0.00	0.00	0.00					26.94	12.76		
		Two-way			UEPEX	PR7CC	0.00	0.00	0.00					26.94	12.76		
	UNBUNDLED PORT with REMOTE CALL FORWARDING CAPABILITY																
	UNBUNDLED REMOTE CALL FORWARDING SERVICE - RESIDENCE																
		Unbundled Remote Call Forwarding Service, Area Calling, Res			UEPVR	UERAC	2.19	21.60	21.60					26.94	12.76		
		Unbundled Remote Call Forwarding Service, Local Calling - Res			UEPVR	UERLC	2.19	21.60	21.60					26.94	12.76		
		Unbundled Remote Call Forwarding Service, InterLATA - Res			UEPVR	UERTE	2.19	21.60	21.60					26.94	12.76		
		Unbundled Remote Call Forwarding Service, IntraLATA - Res			UEPVR	UERTR	2.19	21.60	21.60					26.94	12.76		
	Non-Recurring																
		Unbundled Remote Call Forwarding Service - Conversion - Switch-as-is			UEPVR	USAC2		2.77	0.40					26.94	12.76		
		Unbundled Remote Call Forwarding Service - Conversion with allowed change (PIC and LPIC)			UEPVR	USACC		2.77	0.40								
	UNBUNDLED REMOTE CALL FORWARDING - Bus																
		Unbundled Remote Call Forwarding Service, Area Calling - Bus			UEPVB	UERAC	2.19	21.60	21.60					26.94	12.76		
		Unbundled Remote Call Forwarding Service, Local Calling - Bus			UEPVB	UERLC	2.19	21.60	21.60					26.94	12.76		

UNBUNDLED NETWORK ELEMENTS - North Carolina														Attachment: 2		Exhibit: A	
CATEGORY	RATE ELEMENTS	Interim	Zone	BCS	USOC	RATES ($)					Svc Order Submitted Elec per LSR	Svc Order Submitted Manually per LSR	Incremental Charge - Manual Svc Order vs. Electronic-1st	Incremental Charge - Manual Svc Order vs. Electronic-Add'l	Incremental Charge - Manual Svc Order vs. Electronic-Disc 1st	Incremental Charge - Manual Svc Order vs. Electronic-Disc Add'l
						Rec	Nonrecurring		Nonrecurring Disconnect		OSS Rates ($)					
							First	Add'l	First	Add'l	SOMEC	SOMAN	SOMAN	SOMAN	SOMAN	SOMAN
	Unbundled Remote Call Forwarding Service, InterLATA - Bus			UEPVB	UERTE	2.19	21.60	21.60					26.94	12.76		
	Unbundled Remote Call Forwarding Service, IntraLATA - Bus			UEPVB	UERTR	2.19	21.60	21.60					26.94	12.76		
	Unbundled Remote Call Forwarding Service Expanded and Exception Local Calling			UEPVB	UERVJ	2.19	21.60	21.60					26.94	12.76		
Non-Recurring																
	Unbundled Remote Call Forwarding Service - Conversion - Switch-as-is			UEPVB	USAC2		2.77	0.40					26.94	12.76		
	Unbundled Remote Call Forwarding Service - Conversion with allowed change (PIC and LPIC)			UEPVB	USACC		2.77	0.40								
UNBUNDLED LOCAL SWITCHING, PORT USAGE																
End Office Switching (Port Usage)																
	End Office Switching Function, Per MOU					0.0015										
	End Office Trunk Port - Shared, Per MOU					0.00023										
Tandem Switching (Port Usage) (Local or Access Tandem)																
	Tandem Switching Function Per MOU					0.0006										
	Tandem Trunk Port - Shared, Per MOU					0.0003										
	Tandem Switching Function Per MOU (Melded)					0.00024618										
	Tandem Trunk Port - Shared, Per MOU (Melded)					0.00012309										
	Melded Factor: 41.03% of the Tandem Rate															
Common Transport																
	Common Transport - Per Mile, Per MOU					0.00001										
	Common Transport - Facilities Termination Per MOU					0.00034										
UNBUNDLED PORT/LOOP COMBINATIONS - COST BASED RATES																
Cost Based Rates are applied where BellSouth is required by FCC and/or State Commission rule to provide Unbundled Local Switching or Switch Ports.																
Features shall apply to the Unbundled Port/Loop Combination - Cost Based Rate section in the same manner as they are applied to the Stand-Alone Unbundled Port section of this Rate Exhibit.																
End Office and Tandem Switching Usage and Common Transport Usage rates in the Port section of this rate exhibit shall apply to all combinations of loop/port network elements except for UNE Coin Port/Loop Combinations.																
The first and additional Port nonrecurring charges apply to Not Currently Combined Combos. For Currently Combined Combos the nonrecurring charges shall be those identified in the Nonrecurring - Currently Combined sections.																
2-WIRE VOICE GRADE LOOP WITH 2-WIRE LINE PORT (RES)																
UNE Port/Loop Combination Rates																
	2-Wire VG Loop/Port Combo - Zone 1		1			13.03										
	2-Wire VG Loop/Port Combo - Zone 2		2			21.33										
	2-Wire VG Loop/Port Combo - Zone 3		3			32.61										
UNE Loop Rates																
	2-Wire Voice Grade Loop (SL1) - Zone 1		1	UEPRX	UEPLX	10.75										
	2-Wire Voice Grade Loop (SL1) - Zone 2		2	UEPRX	UEPLX	19.05										
	2-Wire Voice Grade Loop (SL1) - Zone 3		3	UEPRX	UEPLX	30.33										
2-Wire Voice Grade Line Port Rates (Res)																
	2-Wire voice unbundled port - residence			UEPRX	UEPRL	2.28	79.59	63.97					40.18	9.45		
	2-Wire voice unbundled port with Caller ID - res			UEPRX	UEPRC	2.28	79.59	63.97					40.18	9.45		
	2-Wire voice unbundled port outgoing only - res			UEPRX	UEPRO	2.28	79.59	63.97					40.18	9.45		
	2-Wire voice unbundles res, low usage line port with Caller ID (LUM)			UEPRX	UEPAP	2.28	79.59	63.97					40.18	9.45		
	2-Wire voice unbundled Low Usage Line Port without Caller ID Capability			UEPRX	UEPRT	2.28	79.59	63.97					40.18	9.45		
	2-Wire Voice Grade Unbundled Port without Caller ID capability, North Carolina			UEPRX	UEPRZ	2.28	79.59	63.97								
	2-Wire Voice Grade Unbundled Port without Caller ID capability, North Carolina			UEPRX	UEPRY	2.28	79.59	63.97								
FEATURES																
	All Features Offered			UEPRX	UEPVF	3.40	0.00	0.00					40.18	9.45		
LOCAL NUMBER PORTABILITY																
	Local Number Portability (1 per port)			UEPRX	LNPCX	0.35										
NONRECURRING CHARGES (NRCs) - CURRENTLY COMBINED																
	2-Wire Voice Grade Loop / Line Port Combination - Conversion - Switch-as-is			UEPRX	USAC2		2.77	0.40					40.18	9.45		
	2-Wire Voice Grade Loop / Line Port Combination - Conversion - Switch with change			UEPRX	USACC		2.77	0.40					40.18	9.45		
	2-Wire Voice Grade Loop / Line Port Combination - Conversion - Subsequent Database Update						1.42						10.27			

UNBUNDLED NETWORK ELEMENTS - North Carolina														Attachment: 2		Exhibit: A	
CATEGORY	RATE ELEMENTS	Interim	Zone	BCS	USOC	RATES ($)					Svc Order Submitted Elec per LSR	Svc Order Submitted Manually per LSR	Incremental Charge - Manual Svc Order vs. Electronic-1st	Incremental Charge - Manual Svc Order vs. Electronic-Add'l	Incremental Charge - Manual Svc Order vs. Electronic-Disc 1st	Incremental Charge - Manual Svc Order vs. Electronic-Disc Add'l
						Rec	Nonrecurring		Nonrecurring Disconnect		OSS Rates ($)					
							First	Add'l	First	Add'l	SOMEC	SOMAN	SOMAN	SOMAN	SOMAN	SOMAN
ADDITIONAL NRCs																
	2-Wire Voice Grade Loop/Line Port Combination - Subsequent Activity			UEPRX	USAS2	0.00	0.00	0.00					40.18	9.45		
	Unbundled Miscellaneous Rate Element, Tag Loop at End User Premise			UEPRX	URETL		8.33	0.83					26.94	12.76	0.00	0.00
OFF/ON PREMISES EXTENSION CHANNELS																
	2 Wire Analog Voice Grade Extension Loop – Non-Design		1	UEPRX	UEAEN	12.11	57.99	42.37					26.94	12.76	0.00	0.00
	2 Wire Analog Voice Grade Extension Loop – Non-Design		2	UEPRX	UEAEN	21.24	57.99	42.37					26.94	12.76	0.00	0.00
	2 Wire Analog Voice Grade Extension Loop – Non-Design		3	UEPRX	UEAEN	33.65	57.99	42.37					26.94	12.76	0.00	0.00
	2 Wire Analog Voice Grade Extension Loop – Design		1	UEPRX	UEAED	14.97	142.97	106.56					26.94	12.76	0.00	0.00
	2 Wire Analog Voice Grade Extension Loop – Design		2	UEPRX	UEAED	25.93	142.97	106.56					26.94	12.76	0.00	0.00
	2 Wire Analog Voice Grade Extension Loop – Design		3	UEPRX	UEAED	40.81	142.97	106.56					26.94	12.76	0.00	0.00
INTEROFFICE TRANSPORT																
	Interoffice Transport - Dedicated - 2 Wire Voice Grade - Facility Termination			UEPRX	U1TV2	18.00	137.48	52.58					38.07	38.07		
	Interoffice Transport - Dedicated - 2 Wire Voice Grade - Per Mile or Fraction Mile			UEPRX	U1TVM	0.0125	0.00	0.00								
2-WIRE VOICE GRADE LOOP WITH 2-WIRE LINE PORT (BUS)																
UNE Port/Loop Combination Rates																
	2-Wire VG Loop/Port Combo - Zone 1		1			13.03										
	2-Wire VG Loop/Port Combo - Zone 2		2			21.33										
	2-Wire VG Loop/Port Combo - Zone 3		3			32.61										
UNE Loop Rates																
	2-Wire Voice Grade Loop (SL1) - Zone 1		1	UEPBX	UEPLX	10.75										
	2-Wire Voice Grade Loop (SL1) - Zone 2		2	UEPBX	UEPLX	19.05										
	2-Wire Voice Grade Loop (SL1) - Zone 3		3	UEPBX	UEPLX	30.33										
2-Wire Voice Grade Line Port (Bus)																
	2-Wire voice unbundled port without Caller ID - bus			UEPBX	UEPBL	2.28	79.59	63.97					40.18	9.45		
	2-Wire voice unbundled port with Caller + E484 ID - bus			UEPBX	UEPBC	2.28	79.59	63.97					40.18	9.45		
	2-Wire voice unbundled port outgoing only - bus			UEPBX	UEPBO	2.28	79.59	63.97					40.18	9.45		
	2-Wire voice unbundled incoming only port with Caller ID - Bus			UEPBX	UEPB1	2.28	79.59	63.97					40.18	9.45		
	2-Wire voice unbundled Incoming Only Port without Caller ID Capability			UEPBX	UEPBE	2.28	79.59	63.97					40.18	9.45		
LOCAL NUMBER PORTABILITY																
	Local Number Portability (1 per port)			UEPBX	LNPCX	0.35										
FEATURES																
	All Features Offered			UEPBX	UEPVF	3.40	0.00	0.00					40.18	9.45		
NONRECURRING CHARGES (NRCs) - CURRENTLY COMBINED																
	2-Wire Voice Grade Loop / Line Port Combination - Conversion - Switch-as-is			UEPBX	USAC2		2.77	0.40					40.18	9.45		
	2-Wire Voice Grade Loop / Line Port Combination - Conversion - Switch with change			UEPBX	USACC		2.77	0.40					40.18	9.45		
	2-Wire Voice Grade Loop / Line Port Combination - Conversion - Subsequent Database Update						1.42						10.27			
ADDITIONAL NRCs																
	2-Wire Voice Grade Loop/Line Port Combination - Subsequent Activity			UEPBX	USAS2		0.00	0.00					40.18	9.45		
	Unbundled Miscellaneous Rate Element, Tag Loop at End User Premise			UEPBX	URETL		8.33	0.83					26.94	12.76	0.00	0.00
OFF/ON PREMISES EXTENSION CHANNELS																
	2 Wire Analog Voice Grade Extension Loop – Non-Design		1	UEPBX	UEAEN	12.11	57.99	42.37					26.94	12.76	0.00	0.00
	2 Wire Analog Voice Grade Extension Loop – Non-Design		2	UEPBX	UEAEN	21.24	57.99	42.37					26.94	12.76	0.00	0.00
	2 Wire Analog Voice Grade Extension Loop – Non-Design		3	UEPBX	UEAEN	33.65	57.99	42.37					26.94	12.76	0.00	0.00
	2 Wire Analog Voice Grade Extension Loop – Design		1	UEPBX	UEAED	14.97	142.97	106.56					26.94	12.76	0.00	0.00
	2 Wire Analog Voice Grade Extension Loop – Design		2	UEPBX	UEAED	25.93	142.97	106.56					26.94	12.76	0.00	0.00
	2 Wire Analog Voice Grade Extension Loop – Design		3	UEPBX	UEAED	40.81	142.97	106.56					26.94	12.76	0.00	0.00
INTEROFFICE TRANSPORT																
	Interoffice Transport - Dedicated - 2 Wire Voice Grade - Facility Termination			UEPBX	U1TV2	18.00	137.48	52.58					38.07	38.07		

UNBUNDLED NETWORK ELEMENTS - North Carolina														Attachment: 2		Exhibit: A	
CATEGORY	RATE ELEMENTS	Interim	Zone	BCS	USOC	RATES ($)					Svc Order Submitted Elec per LSR	Svc Order Submitted Manually per LSR	Incremental Charge - Manual Svc Order vs. Electronic-1st	Incremental Charge - Manual Svc Order vs. Electronic-Add'l	Incremental Charge - Manual Svc Order vs. Electronic-Disc 1st	Incremental Charge - Manual Svc Order vs. Electronic-Disc Add'l
						Rec	Nonrecurring		Nonrecurring Disconnect		OSS Rates ($)					
							First	Add'l	First	Add'l	SOMEC	SOMAN	SOMAN	SOMAN	SOMAN	SOMAN
	Interoffice Transport - Dedicated - 2 Wire Voice Grade - Per Mile or Fraction Mile			UEPBX	U1TVM	0.0125	0.00	0.00								
2-WIRE VOICE GRADE LOOP WITH 2-WIRE LINE PORT (RES - PBX)																
UNE Port/Loop Combination Rates																
	2-Wire VG Loop/Port Combo - Zone 1		1			13.03										
	2-Wire VG Loop/Port Combo - Zone 2		2			21.33										
	2-Wire VG Loop/Port Combo - Zone 3		3			32.61										
UNE Loop Rates																
	2-Wire Voice Grade Loop (SL 1) - Zone 1		1	UEPRG	UEPLX	10.75										
	2-Wire Voice Grade Loop (SL 1) - Zone 2		2	UEPRG	UEPLX	19.05										
	2-Wire Voice Grade Loop (SL 1) - Zone 3		3	UEPRG	UEPLX	30.33										
2-Wire Voice Grade Line Port Rates (RES - PBX)																
	2-Wire VG Unbundled Combination 2-Way PBX Trunk Port - Res			UEPRG	UEPRD	2.28	164.57	128.16					40.18	9.45		
LOCAL NUMBER PORTABILITY																
	Local Number Portability (1 per port)			UEPRG	LNPCP	3.15	0.00	0.00								
FEATURES																
	All Features Offered			UEPRG	UEPVF	3.40	0.00	0.00					40.18	9.45		
NONRECURRING CHARGES (NRCs) - CURRENTLY COMBINED																
	2-Wire Voice Grade Loop/ Line Port Combination (PBX) - Conversion - Switch-As-Is			UEPRG	USAC2		2.77	0.40					40.18	9.45		
	2-Wire Voice Grade Loop/ Line Port Combination (PBX) - Conversion - Switch with Change			UEPRG	USACC		2.77	0.40					40.18	9.45		
	2-Wire Voice Grade Loop / Line Port Combination - Conversion - Subsequent Database Update						1.42						10.27			
ADDITIONAL NRCs																
	2-Wire Voice Grade Loop/ Line Port Combination (PBX) - Subsequent Activity			UEPRG	USAS2	0.00	0.00	0.00					40.18	9.45		
	Unbundled Miscellaneous Rate Element, Tag Loop at End User Premise			UEPRG	URETL		8.33	0.83					26.94	12.76	0.00	0.00
OFF/ON PREMISES EXTENSION CHANNELS																
	Local Channel Voice grade, per termination		1	UEPRG	P2JHX	14.97	142.97	106.56					26.94	12.76	0.00	0.00
	Local Channel Voice grade, per termination		2	UEPRG	P2JHX	25.93	142.97	106.56					26.94	12.76	0.00	0.00
	Local Channel Voice grade, per termination		3	UEPRG	P2JHX	40.81	142.97	106.56					26.94	12.76	0.00	0.00
	Non-Wire Direct Serve Channel Voice Grade		1	UEPRG	SDD2X	14.62	252.06	109.08					26.94	12.76	0.00	0.00
	Non-Wire Direct Serve Channel Voice Grade		2	UEPRG	SDD2X	23.86	126.03	54.54					26.94	12.76	0.00	0.00
	Non-Wire Direct Serve Channel Voice Grade		3	UEPRG	SDD2X	36.40	126.03	54.54					26.94	12.76	0.00	0.00
INTEROFFICE TRANSPORT																
	Interoffice Transport - Dedicated - 2 Wire Voice Grade - Facility Termination			UEPRG	U1TV2	18.00	137.48	52.58					38.07	38.07		
	Interoffice Transport - Dedicated - 2 Wire Voice Grade - Per Mile or Fraction Mile			UEPRG	U1TVM	0.0125	0.00	0.00								
2-WIRE VOICE GRADE LOOP WITH 2-WIRE LINE PORT (BUS - PBX)																
UNE Port/Loop Combination Rates																
	2-Wire VG Loop/Port Combo - Zone 1		1			13.03										
	2-Wire VG Loop/Port Combo - Zone 2		2			21.33										
	2-Wire VG Loop/Port Combo - Zone 3		3			32.61										
UNE Loop Rates																
	2-Wire Voice Grade Loop (SL 1) - Zone 1		1	UEPPX	UEPLX	10.75										
	2-Wire Voice Grade Loop (SL 1) - Zone 2		2	UEPPX	UEPLX	19.05										
	2-Wire Voice Grade Loop (SL 1) - Zone 3		3	UEPPX	UEPLX	30.33										
2-Wire Voice Grade Line Port Rates (BUS - PBX)																
	Line Side Unbundled Combination 2-Way PBX Trunk Port - Bus			UEPPX	UEPPC	2.28	164.57	128.16					40.18	9.45		
	Line Side Unbundled Outward PBX Trunk Port - Bus			UEPPX	UEPPO	2.28	164.57	128.16					40.18	9.45		
	Line Side Unbundled Incoming PBX Trunk Port - Bus			UEPPX	UEPP1	2.28	164.57	128.16					40.18	9.45		
	2-Wire Voice Unbundled PBX LD Terminal Ports			UEPPX	UEPLD	2.28	164.57	128.16					40.18	9.45		
	2-Wire Voice Unbundled 2-Way Combination PBX Usage Port			UEPPX	UEPXA	2.28	164.57	128.16					40.18	9.45		
	2-Wire Voice Unbundled PBX Toll Terminal Hotel Ports			UEPPX	UEPXB	2.28	164.57	128.16					40.18	9.45		

UNBUNDLED NETWORK ELEMENTS - North Carolina														Attachment: 2		Exhibit: A	
CATEGORY	RATE ELEMENTS	Interim	Zone	BCS	USOC	RATES ($)					Svc Order Submitted Elec per LSR	Svc Order Submitted Manually per LSR	Incremental Charge - Manual Svc Order vs. Electronic-1st	Incremental Charge - Manual Svc Order vs. Electronic-Add'l	Incremental Charge - Manual Svc Order vs. Electronic-Disc 1st	Incremental Charge - Manual Svc Order vs. Electronic-Disc Add'l
						Rec	Nonrecurring		Nonrecurring Disconnect		OSS Rates ($)					
							First	Add'l	First	Add'l	SOMEC	SOMAN	SOMAN	SOMAN	SOMAN	SOMAN
	2-Wire Voice Unbundled PBX LD DDD Terminals Port			UEPPX	UEPXC	2.28	164.57	128.16					40.18	9.45		
	2-Wire Voice Unbundled PBX LD Terminal Switchboard Port			UEPPX	UEPXD	2.28	164.57	128.16					40.18	9.45		
	2-Wire Voice Unbundled PBX LD Terminal Switchboard IDD Capable Port			UEPPX	UEPXE	2.28	164.57	128.16					40.18	9.45		
	2-Wire Voice Unbundled 2-Way PBX Hotel/Hospital Economy Administrative Calling Port			UEPPX	UEPXL	2.28	164.57	128.16					40.18	9.45		
	2-Wire Voice Unbundled 2-Way PBX Hotel/Hospital Economy Room Calling Port			UEPPX	UEPXM	2.28	164.57	128.16					40.18	9.45		
	2-Wire Voice Unbundled 1-Way Outgoing PBX Hotel/Hospital Discount Room Calling Port			UEPPX	UEPXO	2.28	164.57	128.16					40.18	9.45		
	2-Wire Voice Unbundled 1-Way Outgoing PBX Measured Port			UEPPX	UEPXS	2.28	164.57	128.16					40.18	9.45		
LOCAL NUMBER PORTABILITY																
	Local Number Portability (1 per port)			UEPPX	LNPCP	3.15	0.00	0.00					40.18	9.45		
FEATURES																
	All Features Offered			UEPPX	UEPVF	3.40	0.00	0.00					40.18	9.45		
NONRECURRING CHARGES (NRCs) - CURRENTLY COMBINED																
	2-Wire Voice Grade Loop/ Line Port Combination (PBX) - Conversion - Switch-As-Is			UEPPX	USAC2		2.77	0.40					40.18	9.45		
	2-Wire Voice Grade Loop/ Line Port Combination (PBX) - Conversion - Switch with Change			UEPPX	USACC		2.77	0.40					40.18	9.45		
	2-Wire Voice Grade Loop / Line Port Combination - Conversion - Subsequent Database Update						1.42						10.27			
ADDITIONAL NRCs																
	2-Wire Voice Grade Loop/ Line Port Combination (PBX) - Subsequent Activity			UEPPX	USAS2	0.00	0.00	0.00					40.18	9.45		
	Unbundled Miscellaneous Rate Element, Tag Loop at End User Premise			UEPPX	URETL		8.33	0.83					26.94	12.76	0.00	0.00
OFF/ON PREMISES EXTENSION CHANNELS																
	Local Channel Voice grade, per termination		1	UEPPX	P2JHX	14.97	142.97	106.56					26.94	12.76	0.00	0.00
	Local Channel Voice grade, per termination		2	UEPPX	P2JHX	25.93	142.97	106.56					26.94	12.76	0.00	0.00
	Local Channel Voice grade, per termination		3	UEPPX	P2JHX	40.81	142.97	106.56					26.94	12.76	0.00	0.00
	Non-Wire Direct Serve Channel Voice Grade		1	UEPPX	SDD2X	14.62	252.06	109.08					26.94	12.76	0.00	0.00
	Non-Wire Direct Serve Channel Voice Grade		2	UEPPX	SDD2X	23.86	126.03	54.54					26.94	12.76	0.00	0.00
	Non-Wire Direct Serve Channel Voice Grade		3	UEPPX	SDD2X	36.40	126.03	54.54					26.94	12.76	0.00	0.00
INTEROFFICE TRANSPORT																
	Interoffice Transport - Dedicated - 2 Wire Voice Grade - Facility Termination			UEPPX	U1TV2	18.00	137.48	52.58					38.07	38.07		
	Interoffice Transport - Dedicated - 2 Wire Voice Grade - Per Mile or Fraction Mile			UEPPX	U1TVM	0.0125	0.00	0.00								
2-WIRE VOICE GRADE LOOP WITH 2-WIRE ANALOG LINE COIN PORT																
UNE Port/Loop Combination Rates																
	2-Wire VG Coin Port/Loop Combo – Zone 1		1			13.03										
	2-Wire VG Coin Port/Loop Combo – Zone 2		2			21.33										
	2-Wire VG Coin Port/Loop Combo – Zone 3		3			32.61										
UNE Loop Rates																
	2-Wire Voice Grade Loop (SL1) - Zone 1		1	UEPCO	UEPLX	10.75										
	2-Wire Voice Grade Loop (SL1) - Zone 2		2	UEPCO	UEPLX	19.05										
	2-Wire Voice Grade Loop (SL1) - Zone 3		3	UEPCO	UEPLX	30.33										
2-Wire Voice Grade Line Ports (COIN)																
	2-Wire Coin 2-Way without Operator Screening and without Blocking (NC)			UEPCO	UEPND	2.28	79.59	63.97					40.18	9.45		
	2-Wire Coin 2-Way with Operator Screening (NC)			UEPCO	UEPNC	2.28	79.59	63.97					40.18	9.45		
	2-Wire Coin 2-Way with Operator Screening and Blocking: 011, 900/976, 1+DDD (NC, TN)			UEPCO	UEPRP	2.28	79.59	63.97					40.18	9.45		
	2-Wire Coin 2-Way with Operator Screening and 011 Blocking (NC)			UEPCO	UEPNB	2.28	79.59	63.97					40.18	9.45		
	2-Wire Coin 2-Way with Operator Screening: 900 Blocking: 900/976, 1+DDD, 011+, and Local (NC, TN)			UEPCO	UEPCA	2.28	79.59	63.97					40.18	9.45		

UNBUNDLED NETWORK ELEMENTS - North Carolina														Attachment: 2		Exhibit: A	
CATEGORY	RATE ELEMENTS	Interim	Zone	BCS	USOC	RATES ($)					Svc Order Submitted Elec per LSR	Svc Order Submitted Manually per LSR	Incremental Charge - Manual Svc Order vs. Electronic-1st	Incremental Charge - Manual Svc Order vs. Electronic-Add'l	Incremental Charge - Manual Svc Order vs. Electronic-Disc 1st	Incremental Charge - Manual Svc Order vs. Electronic-Disc Add'l
						Rec	Nonrecurring		Nonrecurring Disconnect		OSS Rates ($)					
							First	Add'l	First	Add'l	SOMEC	SOMAN	SOMAN	SOMAN	SOMAN	SOMAN
	2-Wire Coin Outward with Operator Screening and 011 Blocking (NC)			UEPCO	UEPNE	2.28	79.59	63.97					40.18	9.45		
	2-Wire Coin Outward with Operator Screening and Blocking: 900/976, 1+DDD, 011+, and Local (NC)			UEPCO	UEPCL	2.28	79.59	63.97					40.18	9.45		
	2-Wire 2-Way Smartline with 900/976 (all states except LA)			UEPCO	UEPCK	2.28	79.59	63.97					40.18	9.45		
	2-Wire Coin Outward Smartline with 900/976 (all states except LA)			UEPCO	UEPCR	2.28	79.59	63.97					40.18	9.45		
ADDITIONAL UNE COIN PORT/LOOP (RC)																
	UNE Coin Port/Loop Combo Usage (Flat Rate)			UEPCO	URECU	3.70	0.00	0.00	0.00	0.00			40.18	9.45		
LOCAL NUMBER PORTABILITY																
	Local Number Portability (1 per port)			UEPCO	LNPCX	0.35										
NONRECURRING CHARGES - CURRENTLY COMBINED																
	2-Wire Voice Grade Loop / Line Port Combination - Conversion - Switch-as-is			UEPCO	USAC2		2.77	0.40					40.18	9.45		
	2-Wire Voice Grade Loop / Line Port Combination - Conversion - Switch with change			UEPCO	USACC		2.77	0.40					40.18	9.45		
	2-Wire Voice Grade Loop / Line Port Combination - Conversion - Subsequent Database Update						1.42									
ADDITIONAL NRCs																
	2-Wire Voice Grade Loop/Line Port Combination - Subsequent Activity			UEPCO	USAS2		0.00	0.00					40.18	9.45		
	Unbundled Miscellaneous Rate Element, Tag Loop at End User Premise			UEPCO	URETL		8.33	0.83					26.94	12.76	0.00	0.00
2-WIRE VOICE LOOP/ 2WIRE VOICE GRADE IO TRANSPORT/ 2-WIRE LINE PORT (RES)																
UNE Port/Loop Combination Rates																
	2-Wire VG Loop/IO Tranport/Port Combo - Zone 1		1			17.16										
	2-Wire VG Loop/IO Tranport/Port Combo - Zone 2		2			28.12										
	2-Wire VG Loop/IO Tranport/Port Combo - Zone 3		3			43.00										
UNE Loop Rates																
	2-Wire Voice Grade Loop (SL2) - Zone 1		1	UEPFR	UECF2	14.97										
	2-Wire Voice Grade Loop (SL2) - Zone 2		2	UEPFR	UECF2	25.93										
	2-Wire Voice Grade Loop (SL2) - Zone 3		3	UEPFR	UECF2	40.81										
2-Wire Voice Grade Line Port Rates (Res)																
	2-Wire voice unbundled port - residence			UEPFR	UEPRL	2.19	225.00	225.00					40.18	9.45		
	2-Wire voice unbundled port with Caller ID - res			UEPFR	UEPRC	2.19	225.00	225.00					40.18	9.45		
	2-Wire voice unbundled port outgoing only - res			UEPFR	UEPRO	2.19	225.00	225.00					40.18	9.45		
	2-Wire voice unbundles res, low usage line port with Caller ID (LUM)			UEPFR	UEPAP	2.19	225.00	225.00					40.18	9.45		
INTEROFFICE TRANSPORT																
	Interoffice Transport - Dedicated - 2 Wire Voice Grade - Facility Termination			UEPFR	U1TV2	18.00	140.00	71.00								
	Interoffice Transport - Dedicated - 2 Wire Voice Grade - Per Mile or Fraction Mile			UEPFR	1L5XX	0.0125										
FEATURES																
	All Features Offered			UEPFR	UEPVF	3.40	0.00	0.00					40.18	9.45		
LOCAL NUMBER PORTABILITY																
	Local Number Portability (1 per port)			UEPFR	LNPCX	0.35										
NONRECURRING CHARGES (NRCs) - CURRENTLY COMBINED																
	2-Wire Loop / Dedicated IO Transport / 2 Wire Line Port Combination - Conversion - Switch-as-is			UEPFR	USAC2		9.03	1.87					40.18	9.45		
	2-Wire Loop / Dedicated IO Transport / 2 Wire Line Port Combination - Conversion - Switch-With-Change			UEPFR	USACC		9.03	1.87					40.18	9.45		
	Unbundled Miscellaneous Rate Element, Tag Designed Loop at End User Premise			UEPFR	URETN		11.20	1.10					26.94	12.76	0.00	0.00
2-WIRE VOICE LOOP/ 2WIRE VOICE GRADE IO TRANSPORT/ 2-WIRE LINE PORT (BUS)																
UNE Port/Loop Combination Rates																
	2-Wire VG Loop/IO Tranport/Port Combo - Zone 1		1			17.16										
	2-Wire VG Loop/IO Tranport/Port Combo - Zone 2		2			28.12										
	2-Wire VG Loop/IO Tranport/Port Combo - Zone 3		3			43.00										

UNBUNDLED NETWORK ELEMENTS - North Carolina														Attachment: 2		Exhibit: A	
CATEGORY	RATE ELEMENTS	Interim	Zone	BCS	USOC	RATES ($)					Svc Order Submitted Elec per LSR	Svc Order Submitted Manually per LSR	Incremental Charge - Manual Svc Order vs. Electronic-1st	Incremental Charge - Manual Svc Order vs. Electronic-Add'l	Incremental Charge - Manual Svc Order vs. Electronic-Disc 1st	Incremental Charge - Manual Svc Order vs. Electronic-Disc Add'l
						Rec	Nonrecurring		Nonrecurring Disconnect		OSS Rates ($)					
							First	Add'l	First	Add'l	SOMEC	SOMAN	SOMAN	SOMAN	SOMAN	SOMAN
UNE Loop Rates																
	2-Wire Voice Grade Loop (SL2) - Zone 1		1	UEPFB	UECF2	14.97										
	2-Wire Voice Grade Loop (SL2) - Zone 2		2	UEPFB	UECF2	25.93										
	2-Wire Voice Grade Loop (SL2) - Zone 3		3	UEPFB	UECF2	40.81										
2-Wire Voice Grade Line Port (Bus)																
	2-Wire voice unbundled port without Caller ID - bus			UEPFB	UEPBL	2.19	225.00	225.00					40.18	9.45		
	2-Wire voice unbundled port with Caller + E484 ID - bus			UEPFB	UEPBC	2.19	225.00	225.00					40.18	9.45		
	2-Wire voice unbundled port outgoing only - bus			UEPFB	UEPBO	2.19	225.00	225.00					40.18	9.45		
	2-Wire voice unbundled incoming only port with Caller ID - Bus			UEPFB	UEPB1	2.19	225.00	225.00					40.18	9.45		
LOCAL NUMBER PORTABILITY																
	Local Number Portability (1 per port)			UEPFB	LNPCX	0.35										
INTEROFFICE TRANSPORT																
	Interoffice Transport - Dedicated - 2 Wire Voice Grade - Facility Termination			UEPFB	U1TV2	18.00	140.00	71.00								
	Interoffice Transport - Dedicated - 2 Wire Voice Grade - Per Mile or Fraction Mile			UEPFB	1L5XX	0.0125										
FEATURES																
	All Features Offered			UEPFB	UEPVF	3.40	0.00	0.00					40.18	9.45		
NONRECURRING CHARGES (NRCs) - CURRENTLY COMBINED																
	2-Wire Loop / Dedicated IO Transport / 2 Wire Line Port Combination - Conversion - Switch-as-is			UEPFB	USAC2		9.03	1.87					40.18	9.45		
	2-Wire Loop / Dedicated IO Transport / 2 Wire Line Port Combination - Conversion - Switch with change			UEPFB	USACC		9.03	1.87					40.18	9.45		
	Unbundled Miscellaneous Rate Element, Tag Designed Loop at End User Premise			UEPFB	URETN		11.20	1.10					26.94	12.76	0.00	0.00
2-WIRE VOICE LOOP/ 2WIRE VOICE GRADE IO TRANSPORT/ 2-WIRE LINE PORT (PBX)																
UNE Port/Loop Combination Rates																
	2-Wire VG Loop/IO Tranport/Port Combo - Zone 1		1			17.16										
	2-Wire VG Loop/IO Tranport/Port Combo - Zone 2		2			28.12										
	2-Wire VG Loop/IO Tranport/Port Combo - Zone 3		3			43.00										
UNE Loop Rates																
	2-Wire Voice Grade Loop (SL2) - Zone 1		1	UEPFP	UECF2	14.97										
	2-Wire Voice Grade Loop (SL2) - Zone 2		2	UEPFP	UECF2	25.93										
	2-Wire Voice Grade Loop (SL2) - Zone 3		3	UEPFP	UECF2	40.81										
2-Wire Voice Grade Line Port Rates (BUS - PBX)																
	Line Side Unbundled Combination 2-Way PBX Trunk Port - Bus			UEPFP	UEPPC	2.18	225.00	225.00					40.18	9.45		
	Line Side Unbundled Outward PBX Trunk Port - Bus			UEPFP	UEPPO	2.18	225.00	225.00					40.18	9.45		
	Line Side Unbundled Incoming PBX Trunk Port - Bus			UEPFP	UEPP1	2.18	225.00	225.00					40.18	9.45		
	2-Wire Voice Unbundled PBX LD Terminal Ports			UEPFP	UEPLD	2.18	225.00	225.00					40.18	9.45		
	2-Wire Voice Unbundled 2-Way Combination PBX Usage Port			UEPFP	UEPXA	2.18	225.00	225.00					40.18	9.45		
	2-Wire Voice Unbundled PBX Toll Terminal Hotel Ports			UEPFP	UEPXB	2.18	225.00	225.00					40.18	9.45		
	2-Wire Voice Unbundled PBX LD DDD Terminals Port			UEPFP	UEPXC	2.18	225.00	225.00					40.18	9.45		
	2-Wire Voice Unbundled PBX LD Terminal Switchboard Port			UEPFP	UEPXD	2.18	225.00	225.00					40.18	9.45		
	2-Wire Voice Unbundled PBX LD Terminal Switchboard IDD Capable Port			UEPFP	UEPXE	2.18	225.00	225.00					40.18	9.45		
	2-Wire Voice Unbundled 2-Way PBX Hotel/Hospital Economy Administrative Calling Port			UEPFP	UEPXL	2.18	225.00	225.00					40.18	9.45		
	2-Wire Voice Unbundled 2-Way PBX Hotel/Hospital Economy Room Calling Port			UEPFP	UEPXM	2.18	225.00	225.00					40.18	9.45		
	2-Wire Voice Unbundled 1-Way Outgoing PBX Hotel/Hospital Discount Room Calling Port			UEPFP	UEPXO	2.18	225.00	225.00					40.18	9.45		
	2-Wire Voice Unbundled 1-Way Outgoing PBX Measured Port			UEPFP	UEPXS	2.18	225.00	225.00					40.18	9.45		
LOCAL NUMBER PORTABILITY																
	Local Number Portability (1 per port)			UEPFP	LNPCP	3.15	0.00	0.00					40.18	9.45		
INTEROFFICE TRANSPORT																
	Interoffice Transport - Dedicated - 2 Wire Voice Grade - Facility Termination			UEPFP	U1TV2	18.00	140.00	71.00								

UNBUNDLED NETWORK ELEMENTS - North Carolina														Attachment: 2		Exhibit: A	
CATEGORY	RATE ELEMENTS	Interim	Zone	BCS	USOC	RATES ($)					Svc Order Submitted Elec per LSR	Svc Order Submitted Manually per LSR	Incremental Charge - Manual Svc Order vs. Electronic-1st	Incremental Charge - Manual Svc Order vs. Electronic-Add'l	Incremental Charge - Manual Svc Order vs. Electronic-Disc 1st	Incremental Charge - Manual Svc Order vs. Electronic-Disc Add'l
						Rec	Nonrecurring		Nonrecurring Disconnect		OSS Rates ($)					
							First	Add'l	First	Add'l	SOMEC	SOMAN	SOMAN	SOMAN	SOMAN	SOMAN
	Interoffice Transport - Dedicated - 2 Wire Voice Grade - Per Mile or Fraction Mile			UEPFP	1L5XX	0.0125										
FEATURES																
	All Features Offered			UEPFP	UEPVF	3.40	0.00	0.00					40.18	9.45		
NONRECURRING CHARGES (NRCs) - CURRENTLY COMBINED																
	2-Wire Loop / Dedicated IO Transport / 2 Wire Line Port Combination - Conversion - Switch-as-is			UEPFP	USAC2		9.03	1.87					40.18	9.45		
	2-Wire Loop / Dedicated IO Transport / 2 Wire Line Port Combination - Conversion - Switch with change			UEPFP	USACC		9.03	1.87					40.18	9.45		
	Unbundled Miscellaneous Rate Element, Tag Designed Loop at End User Premise			UEPFP	URETN		11.20	1.10					26.94	12.76	0.00	0.00
UNBUNDLED PORT/LOOP COMBINATIONS - COST BASED RATES																
2-WIRE VOICE GRADE LOOP- BUS ONLY - WITH 2-WIRE DID TRUNK PORT																
UNE Port/Loop Combination Rates																
	2-Wire VG Loop/2-Wire DID Trunk Port Combo - UNE Zone 1		1			20.97										
	2-Wire VG Loop/2-Wire DID Trunk Port Combo - UNE Zone 2		2			27.80										
	2-Wire VG Loop/2-Wire DID Trunk Port Combo - UNE Zone 3		3			37.08										
UNE Loop Rates																
	2-Wire Analog Voice Grade Loop - (SL2) - UNE Zone 1		1	UEPPX	UECD1	8.85										
	2-Wire Analog Voice Grade Loop - (SL2) - UNE Zone 2		2	UEPPX	UECD1	15.68										
	2-Wire Analog Voice Grade Loop - (SL2) - UNE Zone 3		3	UEPPX	UECD1	24.96										
UNE Port Rate																
	Exchange Ports - 2-Wire DID Port			UEPPX	UEPD1	12.12	224.81	188.40					40.18	9.45		
NONRECURRING CHARGES - CURRENTLY COMBINED																
	2-Wire Voice Grade Loop / 2-Wire DID Trunk Port Combination - Switch-as-is			UEPPX	USAC1		13.26	8.39					53.89	11.34		
	2-Wire Voice Grade Loop / 2-Wire DID Trunk Port Conversion with BellSouth Allowable Changes			UEPPX	USA1C		13.26	8.39					53.89	11.34		
ADDITIONAL NRCs																
	2-Wire DID Subsequent Activity - Add Trunks, Per Trunk			UEPPX	USAS1		53.49						40.18	9.45		
	Unbundled Miscellaneous Rate Element, Tag Designed Loop at End User Premise			UEPPX	URETN		11.20	1.10					26.94	12.76	0.00	0.00
Telephone Number/Trunk Group Establisment Charges																
	DID Trunk Termination (One Per Port)			UEPPX	NDT	0.00	0.00	0.00								
	DID Numbers, Establish Trunk Group and Provide First Group of 20 DID Numbers			UEPPX	NDZ	0.00	0.00	0.00								
	Additional DID Numbers for each Group of 20 DID Numbers			UEPPX	ND4	0.00	0.00	0.00								
	DID Numbers, Non- consecutive DID Numbers , Per Number			UEPPX	ND5	0.00	0.00	0.00								
	Reserve Non-Consecutive DID numbers			UEPPX	ND6	0.00	0.00	0.00								
	Reserve DID Numbers			UEPPX	NDV	0.00	0.00	0.00								
LOCAL NUMBER PORTABILITY																
	Local Number Portability (1 per port)			UEPPX	LNPCP	3.15	0.00	0.00								
2-WIRE ISDN DIGITAL GRADE LOOP WITH 2-WIRE ISDN DIGITAL LINE SIDE PORT																
UNE Port/Loop Combination Rates																
	2W ISDN Digital Grade Loop/2W ISDN Digital Line Side Port - UNE Zone 1		1	UEPPB UEPPR		38.84										
	2W ISDN Digital Grade Loop/2W ISDN Digital Line Side Port - UNE Zone 2		2	UEPPB UEPPR		50.01										
	2W ISDN Digital Grade Loop/2W ISDN Digital Line Side Port - UNE Zone 3		3	UEPPB UEPPR		65.18										
UNE Loop Rates																
	2-Wire ISDN Digital Grade Loop - UNE Zone 1		1	UEPPB UEPPR	USL2X	14.47										
	2-Wire ISDN Digital Grade Loop - UNE Zone 2		2	UEPPB UEPPR	USL2X	25.64										
	2-Wire ISDN Digital Grade Loop - UNE Zone 3		3	UEPPB UEPPR	USL2X	40.81										
UNE Port Rate																
	Exchange Port - 2-Wire ISDN Line Side Port			UEPPB UEPPR	UEPPB	24.37	388.20	302.77					19.99	19.99		
NONRECURRING CHARGES - CURRENTLY COMBINED																

UNBUNDLED NETWORK ELEMENTS - North Carolina													Attachment: 2		Exhibit: A	
CATEGORY	RATE ELEMENTS	Interim	Zone	BCS	USOC	RATES ($)					Svc Order Submitted Elec per LSR	Svc Order Submitted Manually per LSR	Incremental Charge - Manual Svc Order vs. Electronic-1st	Incremental Charge - Manual Svc Order vs. Electronic-Add'l	Incremental Charge - Manual Svc Order vs. Electronic-Disc 1st	Incremental Charge - Manual Svc Order vs. Electronic-Disc Add'l
						Rec	Nonrecurring		Nonrecurring Disconnect		OSS Rates ($)					
							First	Add'l	First	Add'l	SOMEC	SOMAN	SOMAN	SOMAN	SOMAN	SOMAN
	2-Wire ISDN Digital Grade Loop / 2-Wire ISDN Line Side Port Combination - Conversion			UEPPB UEPPR	USACB	0.00	174.35	174.35								
	ADDITIONAL NRCs															
	Unbundled Miscellaneous Rate Element, Tag Designed Loop at End User Premise			UEPPB UEPPR	URETN		11.20	1.10								
	Unbundled Miscellaneous Rate Element, Tag Loop at End User Premise			UEPPB UEPPR	URETL		8.33	0.83					26.94	12.76	0.00	0.00
	LOCAL NUMBER PORTABILITY															
	Local Number Portability (1 per port)			UEPPB UEPPR	LNPCX	0.35	0.00	0.00								
	B-CHANNEL USER PROFILE ACCESS:															
	CVS/CSD (DMS/5ESS)			UEPPB UEPPR	U1UCA	0.00	0.00	0.00								
	CVS (EWSD)			UEPPB UEPPR	U1UCB	0.00	0.00	0.00								
	CSD			UEPPB UEPPR	U1UCC	0.00	0.00	0.00								
	B-CHANNEL AREA PLUS USER PROFILE ACCESS: (AL,KY,LA,MS SC,MS, & TN)															
	USER TERMINAL PROFILE															
	User Terminal Profile (EWSD only)			UEPPB UEPPR	U1UMA	0.00	0.00	0.00								
	VERTICAL FEATURES															
	All Vertical Features - One per Channel B User Profile			UEPPB UEPPR	UEPVF	3.40	0.00	0.00								
	INTEROFFICE CHANNEL MILEAGE															
	Interoffice Channel mileage each, including first mile and facilities termination			UEPPB UEPPR	M1GNC	18.0282	137.48	52.58					19.99	19.99		
	Interoffice Channel mileage each, additional mile			UEPPB UEPPR	M1GNM	0.0282	0.00	0.00								
	4-WIRE DS1 DIGITAL LOOP WITH 4-WIRE ISDN DS1 DIGITAL TRUNK PORT															
	The UNE-P DS1 combination rates below for in this rate exhibit apply to the embedded base in place as of 10/2/03 until 4/1/04. After 4/1/04 these rates shall revert to tariff rates or a separate commercial agreement.															
	Requests for 4-Wire DS1 Digital Loop with 4-Wire ISDN DS1 Digital Trunk Port after the effective date of this amendment shall be provided pursuant to a separate agreement or tariff at BellSouth's discretion.															
	UNE Port/Loop Combination Rates															
	4W DS1 Digital Loop/4W ISDN DS1 Digital Trunk Port - UNE Zone 1		1	UEPPP		226.55										
	4W DS1 Digital Loop/4W ISDN DS1 Digital Trunk Port - UNE Zone 2		2	UEPPP		263.28										
	4W DS1 Digital Loop/4W ISDN DS1 Digital Trunk Port - UNE Zone 3		3	UEPPP		313.15										
	UNE Loop Rates															
	4-Wire DS1 Digital Loop - UNE Zone 1		1	UEPPP	USL4P	47.54										
	4-Wire DS1 Digital Loop - UNE Zone 2		2	UEPPP	USL4P	84.27										
	4-Wire DS1 Digital Loop - UNE Zone 3		3	UEPPP	USL4P	134.14										
	UNE Port Rate															
	Exchange Ports - 4-Wire ISDN DS1 Port (E:4/1/2004)			UEPPP	UEPPP	179.01	956.47	663.10					19.99	19.99		
	NONRECURRING CHARGES - CURRENTLY COMBINED															
	4-Wire DS1 Digital Loop / 4-Wire ISDN DS1 Digital Trunk Port Combination - Conversion -Switch-as-is (E:4/1/2004)			UEPPP	USACP	0.00	481.51	481.51								
	ADDITIONAL NRCs															
	4-Wire DS1 Loop / 4-Wire ISDN DS1 Digital Trunk Port - Subsequent Inward/2-Way Tel Nos - (NC Only)			UEPPP	PR7TG		1.17	1.17								
	4-Wire DS1 Loop/4-Wire ISDN Digital Trunk Port - Subsequent Activity Outward tel nos. (NC only)			UEPPP	PR7TP		28.17	28.17								
	4-Wire DS1 Loop / 4-Wire ISDN DS1 Digital Trk Port - Subsequent Inward Tel Numbers			UEPPP	PR7ZT		56.33	56.33								
	LOCAL NUMBER PORTABILITY															
	Local Number Portability (1 per port)			UEPPP	LNPCN	1.75										
	INTERFACE (Provsioning Only)															
	Voice/Data			UEPPP	PR71V	0.00	0.00	0.00								
	Digital Data			UEPPP	PR71D	0.00	0.00	0.00								
	Inward Data			UEPPP	PR71E	0.00	0.00	0.00								
	New or Additional "B" Channel															
	New or Additional - Voice/Data B Channel			UEPPP	PR7BV	0.00	36.92						19.99	19.99		
	New or Additional - Digital Data B Channel			UEPPP	PR7BF	0.00	36.92						19.99	19.99		
	New or Additional Inward Data B Channel			UEPPP	PR7BD	0.00	36.92						19.99	19.99		
	CALL TYPES															

UNBUNDLED NETWORK ELEMENTS - North Carolina														Attachment: 2		Exhibit: A	
CATEGORY	RATE ELEMENTS	Interim	Zone	BCS	USOC	RATES ($)					Svc Order Submitted Elec per LSR	Svc Order Submitted Manually per LSR	Incremental Charge - Manual Svc Order vs. Electronic-1st	Incremental Charge - Manual Svc Order vs. Electronic-Add'l	Incremental Charge - Manual Svc Order vs. Electronic-Disc 1st	Incremental Charge - Manual Svc Order vs. Electronic-Disc Add'l
						Rec	Nonrecurring		Nonrecurring Disconnect		OSS Rates ($)					
							First	Add'l	First	Add'l	SOMEC	SOMAN	SOMAN	SOMAN	SOMAN	SOMAN
	Inward			UEPPP	PR7C1	0.00	0.00	0.00								
	Outward			UEPPP	PR7CO	0.00	0.00	0.00								
	Two-way			UEPPP	PR7CC	0.00	0.00	0.00								
Interoffice Channel Mileage																
	Fixed Each Including First Mile			UEPPP	1LN1A	71.8653	217.17	163.75	0.00				19.99	19.99		
	Each Airline-Fractional Additional Mile			UEPPP	1LN1B	0.5753										
4-WIRE DS1 DIGITAL LOOP WITH 4-WIRE DDITS TRUNK PORT																
The UNE-P DS1 combination rates below for in this rate exhibit apply to the embedded base in place as of 10/2/03 until 4/1/04. After 4/1/04 these rates shall revert to tariff rates or a separate commercial agreement.																
Requests for 4-Wire DS1 Digital Loop with 4-Wire DDITS after the effective date of this amendment shall be provided pursuant to a separate agreement or tariff at BellSouth's discretion.																
UNE Port/Loop Combination Rates																
	4W DS1 Digital Loop/4W DDITS Trunk Port - UNE Zone 1		1	UEPDC		171.06										
	4W DS1 Digital Loop/4W DDITS Trunk Port - UNE Zone 2		2	UEPDC		207.79										
	4W DS1 Digital Loop/4W DDITS Trunk Port - UNE Zone 3		3	UEPDC		257.66										
UNE Loop Rates																
	4-Wire DS1 Digital Loop - UNE Zone 1		1	UEPDC	USLDC	47.54										
	4-Wire DS1 Digital Loop - UNE Zone 2		2	UEPDC	USLDC	84.27										
	4-Wire DS1 Digital Loop - UNE Zone 3		3	UEPDC	USLDC	134.14										
UNE Port Rate																
	4-Wire DDITS Digital Trunk Port (E:4/1/2004)			UEPDC	UDD1T	123.52	831.43	491.39					19.99	19.99		
NONRECURRING CHARGES - CURRENTLY COMBINED																
	4-Wire DS1 Digital Loop / 4-Wire DDITS Trunk Port Combination - Switch-as-is (E:4/1/2004)			UEPDC	USAC4		490.38	490.38								
	4-Wire DS1 Digital Loop / 4-Wire DDITS Trunk Port Combination - Conversion with DS1 Changes (E:4/1/2004)			UEPDC	USAWA		490.38	490.38								
	4-Wire DS1 Digital Loop / 4-Wire DDITS Trunk Port Combination - Conversion with Change - Trunk (E:4/1/2004)			UEPDC	USAWB		490.38	490.38								
ADDITIONAL NRCs																
	4-Wire DS1 Loop / 4-Wire DDITS Trunk Port - Subsequent Service Activity Per Service Order			UEPDC	USAS4		127.63	127.63								
	4-Wire DS1 Loop / 4-Wire DDITS Trunk Port - NRC - Subsequent Channel Activation/Chan - 2-Way Trunk			UEPDC	UDTTA		28.81	28.81								
	4-Wire DS1 Loop / 4-Wire DDITS Trunk Port - Subsequent Channel Activation/Chan - 1-Way Outward Trunk			UEPDC	UDTTB		28.81	28.81								
	4-Wire DS1 Loop / 4-Wire DDITS Trunk Port - Subsqnt Channel Activation/Chan Inward Trunk w/out DID			UEPDC	UDTTC		28.81	28.81					19.99	19.99		
	4-Wire DS1 Loop / 4-Wire DDITS Trunk Port - Subsqnt Chan Activation Per Chan - Inward Trunk with DID			UEPDC	UDTTD		28.81	28.81					19.99	19.99		
	4-Wire DS1 Loop / 4-Wire DDITS Trunk Port - Subsqnt Chan Activation / Chan - 2-Way DID w User Trans			UEPDC	UDTTE		28.81	28.81								
BIPOLAR 8 ZERO SUBSTITUTION																
	B8ZS -Superframe Format			UEPDC	CCOSF		0.00i	615.00s								
	B8ZS - Extended Superframe Format			UEPDC	CCOEF		0.00i	615.00s								
Alternate Mark Inversion																
	AMI -Superframe Format			UEPDC	MCOSF		0.00	0.00								
	AMI - Extended SuperFrame Format			UEPDC	MCOPO		0.00	0.00								
Telephone Number/Trunk Group Establisment Charges																
	Telephone Number for 2-Way Trunk Group			UEPDC	UDTGX	0.00							19.99	19.99		
	Telephone Number for 1-Way Outward Trunk Group			UEPDC	UDTGY	0.00							19.99	19.99		
	Telephone Number for 1-Way Inward Trunk Group Without DID			UEPDC	UDTGZ	0.00							19.99	19.99		
	DID Numbers, Establish Trunk Group and Provide First Group of 20 DID Numbers			UEPDC	NDZ	0.00	0.00	0.00								
	DID Numbers for each Group of 20 DID Numbers			UEPDC	ND4	0.00										
	DID Numbers, Non- consecutive DID Numbers , Per Number			UEPDC	ND5	0.00										
	Reserve Non-Consecutive DID Nos.			UEPDC	ND6	0.00	0.00	0.00								
	Reserve DID Numbers			UEPDC	NDV	0.00	0.00	0.00								
Dedicated DS1 (Interoffice Channel Mileage) - FX/FCO for 4-Wire DS1 Digital Loop with 4-Wire DDITS Trunk Port																
	Interoffice Channel Mileage - Fixed rate 0-8 miles (Facilities Termination)			UEPDC	1LNO1	71.29	217.17	163.75	0.00	0.00			19.99	19.99		

UNBUNDLED NETWORK ELEMENTS - North Carolina														Attachment: 2		Exhibit: A	
CATEGORY	RATE ELEMENTS	Interim	Zone	BCS	USOC	RATES ($)					Svc Order Submitted Elec per LSR	Svc Order Submitted Manually per LSR	Incremental Charge - Manual Svc Order vs. Electronic-1st	Incremental Charge - Manual Svc Order vs. Electronic-Add'l	Incremental Charge - Manual Svc Order vs. Electronic-Disc 1st	Incremental Charge - Manual Svc Order vs. Electronic-Disc Add'l
						Rec	Nonrecurring		Nonrecurring Disconnect		OSS Rates ($)					
							First	Add'l	First	Add'l	SOMEC	SOMAN	SOMAN	SOMAN	SOMAN	SOMAN
	Interoffice Channel Mileage - Additional rate per mile - 0-8 miles			UEPDC	1LNOA	0.5753	0.00	0.00								
	Interoffice Channel Mileage - Fixed rate 9-25 miles (Facilities Termination)			UEPDC	1LNO2	0.00	0.00	0.00								
	Interoffice Channel Mileage - Additional rate per mile - 9-25 miles			UEPDC	1LNOB	0.5753	0.00	0.00								
	Interoffice Channel Mileage - Fixed rate 25+ miles (Facilities Termination)			UEPDC	1LNO3	0.00	0.00	0.00	0.00							
	Interoffice Channel Mileage - Additional rate per mile - 25+ miles			UEPDC	1LNOC	0.5753	0.00	0.00								
	Local Number Portability, per DS0 Activated			UEPDC	LNPCP	3.15	0.00	0.00	0.00							
	Central Office Termininating Point			UEPDC	CTG	0.00										
	4-WIRE DS1 LOOP WITH CHANNELIZATION WITH PORT															
	System is 1 DS1 Loop, 1 D4 Channel Bank, and up to 24 Feature Activations															
	Each System can have up to 24 combinations of rates depending on type and number of ports used															
	The UNE-P DS1 combination rates below for 4-Wire DS1 Loop with Channelization with Port in this rate exhibit apply to the embedded base in place as of 10/2/03 until 4/1/04. After 4/1/04 these rates shall revert to tariff rates or a separate agreement.															
	Requests for 4-Wire DS1 Loop with Channelization with Port after the effective date of this amendment shall be provided pursuant to a separate agreement or tariff at BellSouth's discretion.															
	UNE DS1 Loop															
	4-Wire DS1 Loop - UNE Zone 1		1	UEPMG	USLDC	47.54	0.00	0.00								
	4-Wire DS1 Loop - UNE Zone 2		2	UEPMG	USLDC	84.27	0.00	0.00								
	4-Wire DS1 Loop - UNE Zone 3		3	UEPMG	USLDC	134.14	0.00	0.00								
	UNE DSO Channelization Capacities (D4 Channel Bank Configurations)															
	24 DSO Channel Capacity - 1 per DS1			UEPMG	VUM24	123.06	0.00	0.00					19.99	19.99		
	48 DSO Channel Capacity - 1 per 2 DS1s			UEPMG	VUM48	246.12	0.00	0.00					19.99	19.99		
	96 DSO Channel Capacity -1per 4 DS1s			UEPMG	VUM96	492.24	0.00	0.00					19.99	19.99		
	144 DS0 Channel Capacity - 1 per 6 DS1s			UEPMG	VUM14	738.36	0.00	0.00					19.99	19.99		
	192 DS0 Channel Capacity -1 per 8 DS1s			UEPMG	VUM19	984.48	0.00	0.00					19.99	19.99		
	240 DS0 Channel Capacity - 1 per 10 DS1s			UEPMG	VUM2O	1,230.60	0.00	0.00					19.99	19.99		
	288 DS0 Channel Capacity - 1 per 12 DS1s			UEPMG	VUM28	1,476.72	0.00	0.00					19.99	19.99		
	384 DS0 Channel Capacity - 1 per 16 DS1s			UEPMG	VUM38	1,968.96	0.00	0.00					19.99	19.99		
	480 DS0 Channel Capacity - 1 per 20 DS1s			UEPMG	VUM4O	2,461.20	0.00	0.00					19.99	19.99		
	576 DS0 Channel Capacity -1 per 24 DS1s			UEPMG	VUM57	2,953.44	0.00	0.00					19.99	19.99		
	672 DS0 Channel Capacity - 1 per 28 DS1s			UEPMG	VUM67	3,445.68	0.00	0.00					19.99	19.99		
	Non-Recurring Charges (NRC) Associated with 4-Wire DS1 Loop with Channeliztion with Port - Conversion Charge Based on a System															
	A Minimum System configuration is One (1) DS1, One (1) D4 Channel Bank, and Up To 24 DSO Ports with Feature Activations.															
	Multiples of this configuration functioning as one are considered Add'l after the minimum system configuration is counted.															
	NRC - Conversion (Currently Combined) with or without BellSouth Allowed Changes			UEPMG	USAC4	0.00	330.61	16.64					19.99	19.99		
	System Additions at End User Locations Where 4-Wire DS1 Loop with Channelization with Port Combination Currently Exists and															
	New (Not Currently Combined) in all states, except in Density Zone 1 of Top 8 MSA's															
	1 DS1/D4 Channel Bank - Additionally Add NRC for each Port and Assoc Fea Activation (E:4/1/2004)			UEPMG	VUMD4	0.00	743.74	326.22	149.02	17.68			19.99	19.99		
	Bipolar 8 Zero Substitution															
	Clear Channel Capability Format, superframe - Subsequent Activity Only			UEPMG	CCOSF	0.00	0.00i	615.00s								
	Clear Channel Capability Format - Extended Superframe - Subsequent Activity Only			UEPMG	CCOEF	0.00	0.00i	615.00s								
	Alternate Mark Inversion (AMI)															
	Superframe Format			UEPMG	MCOSF	0.00	0.00	0.00								
	Extended Superframe Format			UEPMG	MCOPO	0.00	0.00	0.00								
	Exchange Ports Associated with 4-Wire DS1 Loop with Channelization with Port															
	Exchange Ports															
	Line Side Combination Channelized PBX Trunk Port - Business (E:4/1/2004)			UEPPX	UEPCX	2.28	0.00	0.00	0.00	0.00			40.18	9.45		
	Line Side Outward Channelized PBX Trunk Port - Business (E:4/1/2004)			UEPPX	UEPOX	2.28	0.00	0.00	0.00	0.00			40.18	9.45		
	Line Side Inward Only Channelized PBX Trunk Port without DID (E:4/1/2004)			UEPPX	UEP1X	2.28	0.00	0.00	0.00	0.00			40.18	9.45		

UNBUNDLED NETWORK ELEMENTS - North Carolina														Attachment: 2		Exhibit: A	
CATEGORY	RATE ELEMENTS	Interim	Zone	BCS	USOC	RATES ($)					Svc Order Submitted Elec per LSR	Svc Order Submitted Manually per LSR	Incremental Charge - Manual Svc Order vs. Electronic-1st	Incremental Charge - Manual Svc Order vs. Electronic-Add'l	Incremental Charge - Manual Svc Order vs. Electronic-Disc 1st	Incremental Charge - Manual Svc Order vs. Electronic-Disc Add'l
						Rec	Nonrecurring		Nonrecurring Disconnect		OSS Rates ($)					
							First	Add'l	First	Add'l	SOMEC	SOMAN	SOMAN	SOMAN	SOMAN	SOMAN
	2-Wire Trunk Side Unbundled Channelized DID Trunk Port (E:4/1/2004)			UEPPX	UEPDM	13.26	0.00	0.00	0.00	0.00			40.18	9.45		
Feature Activations - Unbundled Loop Concentration																
	Feature (Service) Activation for each Line Port Terminated in D4 Bank			UEPPX	1PQWM	0.65	25.27	13.34	4.15	4.12			40.18	9.45		
	Feature (Service) Activation for each Trunk Port Terminated in D4 Bank			UEPPX	1PQWU	0.65	77.75	18.33	58.74	11.48			40.18	9.45		
Telephone Number/ Group Establishment Charges for DID Service																
	DID Trunk Termination (1 per Port)			UEPPX	NDT	0.00	0.00	0.00								
	Estab Trk Grp and Provide 1st 20 DID Nos. (FL,GA, NC,& SC)			UEPPX	NDZ	0.00	0.00	0.00								
	DID Numbers - groups of 20 - Valid all States			UEPPX	ND4	0.00	0.00	0.00								
	Non-Consecutive DID Numbers - per number			UEPPX	ND5	0.00	0.00	0.00								
	Reserve Non-Consecutive DID Numbers			UEPPX	ND6	0.00	0.00	0.00								
	Reserve DID Numbers			UEPPX	NDV	0.00	0.00	0.00								
Local Number Portability																
	Local Number Portability - 1 per port			UEPPX	LNPCP	3.15	0.00	0.00								
FEATURES - Vertical and Optional																
Local Switching Features Offered with Line Side Ports Only																
	All Features Available			UEPPX	UEPVF	3.40	0.00	0.00					40.18	9.45		
UNBUNDLED CENTREX PORT/LOOP COMBINATIONS - COST BASED RATES																
1. Cost Based Rates are applied where BellSouth is required by FCC and/or State Commission rule to provide Unbundled Local Switching or Switch Ports.																
2. Features shall apply to the Unbundled Port/Loop Combination - Cost Based Rate section in the same manner as they are applied to the Stand-Alone Unbundled Port section of this Rate Exhibit.																
3. End Office and Tandem Switching Usage and Common Transport Usage rates in the Port section of this rate exhibit shall apply to all combinations of loop/port network elements except for UNE Coin Port/Loop Combinations.																
4. The first and additional Port nonrecurring charges apply to Not Currently Combined Combos. For Currently Combined Combos, the nonrecurring charges shall be those identified in the Nonrecurring - Currently Combined sections. Additional NRCs may apply also and are categorized accordingly.																
5. Market Rates for Unbundled Centrex Port/Loop Combination will be negotiated on an Individual Case Basis, until further notice.																
UNE-P CENTREX - 5ESS (Valid in All States)																
2-Wire VG Loop/2-Wire Voice Grade Port (Centrex) Combo																
UNE Port/Loop Combination Rates (Non-Design)																
	2-Wire VG Loop/2-Wire Voice Grade Port (Centrex) Port Combo - Non-Design		1	UEP95		13.03										
	2-Wire VG Loop/2-Wire Voice Grade Port (Centrex)Port Combo - Non-Design		2	UEP95		21.33										
	2-Wire VG Loop/2-Wire Voice Grade Port (Centrex)Port Combo - Non-Design		3	UEP95		32.61										
UNE Port/Loop Combination Rates (Design)																
	2-Wire VG Loop/2-Wire Voice Grade Port (Centrex) Port Combo - Design		1	UEP95		17.25										
	2-Wire VG Loop/2-Wire Voice Grade Port (Centrex)Port Combo - Design		2	UEP95		28.21										
	2-Wire VG Loop/2-Wire Voice Grade Port (Centrex)Port Combo - Design		3	UEP95		43.09										
UNE Loop Rate																
	2-Wire Voice Grade Loop (SL 1) - Zone 1		1	UEP95	UECS1	10.75										
	2-Wire Voice Grade Loop (SL 1) - Zone 2		2	UEP95	UECS1	19.05										
	2-Wire Voice Grade Loop (SL 1) - Zone 3		3	UEP95	UECS1	30.33										
	2-Wire Voice Grade Loop (SL 2) - Zone 1		1	UEP95	UECS2	14.97										
	2-Wire Voice Grade Loop (SL 2) - Zone 2		2	UEP95	UECS2	25.93										
	2-Wire Voice Grade Loop (SL 2) - Zone 3		3	UEP95	UECS2	40.81										
UNE Port Rate																
All States																
	2-Wire Voice Grade Port (Centrex) Basic Local Area			UEP95	UEPYA	2.28	79.59	63.97					40.18	9.45		
	2-Wire Voice Grade Port (Centrex 800 termination)			UEP95	UEPYB	2.28	79.59	63.97					40.18	9.45		
	2-Wire Voice Grade Port (Centrex with Caller ID)1Basic Local Area			UEP95	UEPYH	2.28	79.59	63.97					40.18	9.45		
	2-Wire Voice Grade Port (Centrex from diff Serving Wire Center)2,3 Basic Local Area			UEP95	UEPYM	2.28	164.57	128.16					40.18	9.45		
	2-Wire Voice Grade Port, Diff Serving Wire Center 2,3 - 800 Service Term - Basic Local Area			UEP95	UEPYZ	2.28							40.18	9.45		

UNBUNDLED NETWORK ELEMENTS - North Carolina														Attachment: 2		Exhibit: A	
CATEGORY		RATE ELEMENTS	Interim	Zone	BCS	USOC	RATES ($)					Svc Order Submitted Elec per LSR	Svc Order Submitted Manually per LSR	Incremental Charge - Manual Svc Order vs. Electronic-1st	Incremental Charge - Manual Svc Order vs. Electronic-Add'l	Incremental Charge - Manual Svc Order vs. Electronic-Disc 1st	Incremental Charge - Manual Svc Order vs. Electronic-Disc Add'l
							Rec	Nonrecurring		Nonrecurring Disconnect		OSS Rates ($)					
								First	Add'l	First	Add'l	SOMEC	SOMAN	SOMAN	SOMAN	SOMAN	SOMAN
		2-Wire Voice Grade Port terminated in on Megalink or equivalent - Basic Local Area			UEP95	UEPY9	2.28	79.59	63.97					40.18	9.45		
		2-Wire Voice Grade Port Terminated on 800 Service Term - Basic Local Area			UEP95	UEPY2	2.28	79.59	63.97					40.18	9.45		
	NC Only																
		2-Wire Voice Grade Port (Centrex)			UEP95	UEPUA	2.28	79.59	63.97					40.18	9.45		
		2-Wire Voice Grade Port (Centrex 800 termination)			UEP95	UEPUB	2.28	79.59	63.97					40.18	9.45		
		2-Wire Voice Grade Port (Centrex with Caller ID)1			UEP95	UEPUH	2.28	79.59	63.97					40.18	9.45		
		2-Wire Voice Grade Port (Centrex from diff Serving Wire Center)2,3			UEP95	UEPUM	2.28	164.57	128.16					40.18	9.45		
		2-Wire Voice Grade Port, Diff Serving Wire Center - 800 Service Term 2,3			UEP95	UEPUZ	2.28	164.57	128.16					40.18	9.45		
		2-Wire Voice Grade Port terminated in on Megalink or equivalent			UEP95	UEPU9	2.28	79.59	63.97					40.18	9.45		
		2-Wire Voice Grade Port Terminated on 800 Service Term			UEP95	UEPU2	2.28	79.59	63.97					40.18	9.45		
	Local Switching																
		Centrex Intercom Funtionality, per port			UEP95	URECS	0.903										
	Local Number Portability																
		Local Number Portability (1 per port)			UEP95	LNPCC	0.35										
	Features																
		All Standard Features Offered, per port			UEP95	UEPVF	3.40										
		All Select Features Offered, per port			UEP95	UEPVS	0.00	457.83									
		All Centrex Control Features Offered, per port			UEP95	UEPVC	3.40										
	NARS																
		Unbundled Network Access Register - Combination			UEP95	UARCX	0.00	0.00	0.00	0.00	0.00		0.00	40.18	9.45		
		Unbundled Network Access Register - Indial			UEP95	UAR1X	0.00	0.00	0.00	0.00	0.00		0.00	40.18	9.45		
		Unbundled Network Access Register - Outdial			UEP95	UAROX	0.00	0.00	0.00	0.00	0.00		0.00	40.18	9.45		
	Miscellaneous Terminations																
	2-Wire Trunk Side																
		Trunk Side Terminations, each			UEP95	CEND6	12.36										
	4-Wire Digital (1.544 Megabits)																
		DS1 Circuit Terminations, each			UEP95	M1HD1	123.65							40.18	9.45		
		DS0 Channels Activated, each			UEP95	M1HDO	0.00	28.81						40.18	9.45		
	Interoffice Channel Mileage - 2-Wire																
		Interoffice Channel Facilities Termination			UEP95	M1GBC	18.00										
		Interoffice Channel mileage, per mile or fraction of mile			UEP95	M1GBM	0.0282										
	Feature Activations (DS0) Centrex Loops on Channelized DS1 Service																
	D4 Channel Bank Feature Activations																
		Feature Activation on D-4 Channel Bank Centrex Loop Slot			UEP95	1PQWS	0.65										
		Feature Activation on D-4 Channel Bank FX line Side Loop Slot			UEP95	1PQW6	0.65										
		Feature Activation on D-4 Channel Bank FX Trunk Side Loop Slot			UEP95	1PQW7	0.65										
		Feature Activation on D-4 Channel Bank Centrex Loop Slot - Different Wire Center			UEP95	1PQWP	0.65										
		Feature Activation on D-4 Channel Bank Private Line Loop Slot			UEP95	1PQWV	0.65										
		Feature Activation on D-4 Channel Bank Tjie Line/Trunk Loop Slot			UEP95	1PQWQ	0.65										
		Feature Activation on D-4 Channel Bank WATS Loop Slot			UEP95	1PQWA	0.65										
	Non-Recurring Charges (NRC) Associated with UNE-P Centrex																
		NRC Conversion Currently Combined Switch-As-Is with allowed changes, per port			UEP95	USAC2		2.77	0.40					40.18	9.45		
		New Centrex Standard Common Block			UEP95	M1ACS	0.00	695.11						40.18	9.45		
		New Centrex Customized Common Block			UEP95	M1ACC	0.00	695.11						40.18	9.45		
		NAR Establishment Charge, Per Occasion			UEP95	URECA	0.00	72.73						40.18	9.45		
	Additional Non-Recurring Charges (NRC)																
		Unbundled Miscellaneous Rate Element, Tag Loop at End Use Premise			UEP95	URETL		8.33	0.83								

UNBUNDLED NETWORK ELEMENTS - North Carolina														Attachment: 2		Exhibit: A	
CATEGORY		RATE ELEMENTS	Interim	Zone	BCS	USOC	RATES ($)					Svc Order Submitted Elec per LSR	Svc Order Submitted Manually per LSR	Incremental Charge - Manual Svc Order vs. Electronic-1st	Incremental Charge - Manual Svc Order vs. Electronic-Add'l	Incremental Charge - Manual Svc Order vs. Electronic-Disc 1st	Incremental Charge - Manual Svc Order vs. Electronic-Disc Add'l
							Rec	Nonrecurring		Nonrecurring Disconnect		OSS Rates ($)					
								First	Add'l	First	Add'l	SOMEC	SOMAN	SOMAN	SOMAN	SOMAN	SOMAN
		Unbundled Miscellaneous Rate Element, Tag Design Loop at End Use Premise			UEP95	URETN		11.20	1.10								
	UNE-P CENTREX - DMS100 (Valid in All States)																
	2-Wire VG Loop/2-Wire Voice Grade Port (Centrex) Combo																
	UNE Port/Loop Combination Rates (Non-Design)																
		2-Wire VG Loop/2-Wire Voice Grade Port (Centrex) Port Combo - Non-Design		1	UEP9D		13.03										
		2-Wire VG Loop/2-Wire Voice Grade Port (Centrex)Port Combo - Non-Design		2	UEP9D		21.33										
		2-Wire VG Loop/2-Wire Voice Grade Port (Centrex)Port Combo - Non-Design		3	UEP9D		32.61										
	UNE Port/Loop Combination Rates (Design)																
		2-Wire VG Loop/2-Wire Voice Grade Port (Centrex) Port Combo - Design		1	UEP9D		17.25										
		2-Wire VG Loop/2-Wire Voice Grade Port (Centrex)Port Combo - Design		2	UEP9D		28.21										
		2-Wire VG Loop/2-Wire Voice Grade Port (Centrex)Port Combo - Design		3	UEP9D		43.09										
	UNE Loop Rate																
		2-Wire Voice Grade Loop (SL 1) - Zone 1		1	UEP9D	UECS1	10.75										
		2-Wire Voice Grade Loop (SL 1) - Zone 2		2	UEP9D	UECS1	19.05										
		2-Wire Voice Grade Loop (SL 1) - Zone 3		3	UEP9D	UECS1	30.33										
		2-Wire Voice Grade Loop (SL 2) - Zone 1		1	UEP9D	UECS2	14.97										
		2-Wire Voice Grade Loop (SL 2) - Zone 2		2	UEP9D	UECS2	25.93										
		2-Wire Voice Grade Loop (SL 2) - Zone 3		3	UEP9D	UECS2	40.81										
	UNE Port Rate																
	ALL STATES																
		2-Wire Voice Grade Port (Centrex) Basic Local Area			UEP9D	UEPYA	2.28	79.59	63.97					40.18	9.45		
		2-Wire Voice Grade Port (Centrex 800 termination)Basic Local Area			UEP9D	UEPYB	2.28	79.59	63.97					40.18	9.45		
		2-Wire Voice Grade Port (Centrex / EBS-PSET)3Basic Local Area			UEP9D	UEPYC	2.28	79.59	63.97					40.18	9.45		
		2-Wire Voice Grade Port (Centrex / EBS-M5009)3Basic Local Area			UEP9D	UEPYD	2.28	79.59	63.97					40.18	9.45		
		2-Wire Voice Grade Port (Centrex / EBS-M5209))3 Basic Local Area			UEP9D	UEPYE	2.28	79.59	63.97					40.18	9.45		
		2-Wire Voice Grade Port (Centrex / EBS-M5112))3 Basic Local Area			UEP9D	UEPYF	2.28	79.59	63.97					40.18	9.45		
		2-Wire Voice Grade Port (Centrex / EBS-M5312))3Basic Local Area			UEP9D	UEPYG	2.28	79.59	63.97					40.18	9.45		
		2-Wire Voice Grade Port (Centrex / EBS-M5008))3 Basic Local Area			UEP9D	UEPYT	2.28	79.59	63.97					40.18	9.45		
		2-Wire Voice Grade Port (Centrex / EBS-M5208))3 Basic Local Area			UEP9D	UEPYU	2.28	79.59	63.97					40.18	9.45		
		2-Wire Voice Grade Port (Centrex / EBS-M5216))3 Basic Local Area			UEP9D	UEPYV	2.28	79.59	63.97					40.18	9.45		
		2-Wire Voice Grade Port (Centrex / EBS-M5316))3 Basic Local Area			UEP9D	UEPY3	2.28	79.59	63.97					40.18	9.45		
		2-Wire Voice Grade Port (Centrex with Caller ID) Basic Local Area			UEP9D	UEPYH	2.28	79.59	63.97					40.18	9.45		
		2-Wire Voice Grade Port (Centrex/Caller ID/Msg Wtg Lamp Indication))4 Basic Local Area			UEP9D	UEPYW	2.28	79.59	63.97					40.18	9.45		
		2-Wire Voice Grade Port (Centrex/Msg Wtg Lamp Indication))4 Basic Local Area			UEP9D	UEPYJ	2.28	79.59	63.97					40.18	9.45		
		2-Wire Voice Grade Port (Centrex from diff Serving Wire Center) 2,3-Basic Local Area			UEP9D	UEPYM	2.28	164.57	128.16					40.18	9.45		
		2-Wire Voice Grade Port (Centrex/differ SWC /EBS-PSET)2,3,4 Basic Local Area			UEP9D	UEPYO	2.28	164.57	128.16					40.18	9.45		

UNBUNDLED NETWORK ELEMENTS - North Carolina														Attachment: 2		Exhibit: A	
CATEGORY		RATE ELEMENTS	Interim	Zone	BCS	USOC	RATES ($)					Svc Order Submitted Elec per LSR	Svc Order Submitted Manually per LSR	Incremental Charge - Manual Svc Order vs. Electronic-1st	Incremental Charge - Manual Svc Order vs. Electronic-Add'l	Incremental Charge - Manual Svc Order vs. Electronic-Disc 1st	Incremental Charge - Manual Svc Order vs. Electronic-Disc Add'l
							Rec	Nonrecurring		Nonrecurring Disconnect		OSS Rates ($)					
								First	Add'l	First	Add'l	SOMEC	SOMAN	SOMAN	SOMAN	SOMAN	SOMAN
		2-Wire Voice Grade Port (Centrex/differ SWC /EBS-M5009)2,3,4 Basic Local Area			UEP9D	UEPYP	2.28	164.57	128.16					40.18	9.45		
		2-Wire Voice Grade Port (Centrex/differ SWC /EBS-5209)2,3,4 Basic Local Area			UEP9D	UEPYQ	2.28	164.57	128.16					40.18	9.45		
		2-Wire Voice Grade Port (Centrex/differ SWC /EBS-M5112)2,3,4 Basic Local Area			UEP9D	UEPYR	2.28	164.57	128.16					40.18	9.45		
		2-Wire Voice Grade Port (Centrex/differ SWC /EBS-M5312)2,3,4 Basic Local Area			UEP9D	UEPYS	2.28	164.57	128.16					40.18	9.45		
		2-Wire Voice Grade Port (Centrex/differ SWC /EBS-M5008)2,3,4 Basic Local Area			UEP9D	UEPY4	2.28	164.57	128.16					40.18	9.45		
		2-Wire Voice Grade Port (Centrex/differ SWC /EBS-M5208)2, 3 Basic Local Area			UEP9D	UEPY5	2.28	164.57	128.16					40.18	9.45		
		2-Wire Voice Grade Port (Centrex/differ SWC /EBS-M5216)2,3,4 Basic Local Area			UEP9D	UEPY6	2.28	164.57	128.16					40.18	9.45		
		2-Wire Voice Grade Port (Centrex/differ SWC /EBS-M5316)2,3,4 Basic Local Area			UEP9D	UEPY7	2.28	164.57	128.16					40.18	9.45		
		2-Wire Voice Grade Port, Diff Serving Wire Center - 800 Service Term 2,3			UEP9D	UEPYZ	2.28	164.57	128.16					40.18	9.45		
		2-Wire Voice Grade Port terminated in on Megalink or equivalent Basic Local Area			UEP9D	UEPY9	2.28	79.59	63.97					40.18	9.45		
		2-Wire Voice Grade Port Terminated on 800 Service Term Basic Local Area			UEP9D	UEPY2	2.28	79.59	63.97					40.18	9.45		
	NC Only																
		2-Wire Voice Grade Port (Centrex)			UEP9D	UEPUA	2.28	79.59	63.97					40.18	9.45		
		2-Wire Voice Grade Port (Centrex 800 termination)			UEP9D	UEPUB	2.28	79.59	63.97					40.18	9.45		
		2-Wire Voice Grade Port (Centrex / EBS-PSET)4			UEP9D	UEPUC	2.28	79.59	63.97					40.18	9.45		
		2-Wire Voice Grade Port (Centrex / EBS-M5009)4			UEP9D	UEPUD	2.28	79.59	63.97					40.18	9.45		
		2-Wire Voice Grade Port (Centrex / EBS-M5209)4			UEP9D	UEPUE	2.28	79.59	63.97					40.18	9.45		
		2-Wire Voice Grade Port (Centrex / EBS-M5112)4			UEP9D	UEPUF	2.28	79.59	63.97					40.18	9.45		
		2-Wire Voice Grade Port (Centrex / EBS-M5312)4			UEP9D	UEPUG	2.28	79.59	63.97					40.18	9.45		
		2-Wire Voice Grade Port (Centrex / EBS-M5008)4			UEP9D	UEPUT	2.28	79.59	63.97					40.18	9.45		
		2-Wire Voice Grade Port (Centrex / EBS-M5208)4			UEP9D	UEPUU	2.28	79.59	63.97					40.18	9.45		
		2-Wire Voice Grade Port (Centrex / EBS-M5216)4			UEP9D	UEPUV	2.28	79.59	63.97					40.18	9.45		
		2-Wire Voice Grade Port (Centrex / EBS-M5316)4			UEP9D	UEPU3	2.28	79.59	63.97					40.18	9.45		
		2-Wire Voice Grade Port (Centrex with Caller ID)			UEP9D	UEPUH	2.28	79.59	63.97					40.18	9.45		
		2-Wire Voice Grade Port (Centrex/Caller ID/Msg Wtg Lamp Indication)4			UEP9D	UEPUW	2.28	79.59	63.97					40.18	9.45		
		2-Wire Voice Grade Port (Centrex/Msg Wtg Lamp Indication)4			UEP9D	UEPUJ	2.28	79.59	63.97					40.18	9.45		
		2-Wire Voice Grade Port (Centrex from diff Serving Wire Center) 2,3			UEP9D	UEPUM	2.28	164.57	128.16					40.18	9.45		
		2-Wire Voice Grade Port (Centrex/differ SWC /EBS-PSET)2,3,4			UEP9D	UEPUO	2.28	164.57	128.16					40.18	9.45		
		2-Wire Voice Grade Port (Centrex/differ SWC /EBS-M5009)2,3,4			UEP9D	UEPUP	2.28	164.57	128.16					40.18	9.45		
		2-Wire Voice Grade Port (Centrex/differ SWC /EBS-5209)2,3,4			UEP9D	UEPUQ	2.28	164.57	128.16					40.18	9.45		
		2-Wire Voice Grade Port (Centrex/differ SWC /EBS-M5112)2,3,4			UEP9D	UEPUR	2.28	164.57	128.16					40.18	9.45		
		2-Wire Voice Grade Port (Centrex/differ SWC /EBS-M5312)2,3,4			UEP9D	UEPUS	2.28	164.57	128.16					40.18	9.45		
		2-Wire Voice Grade Port (Centrex/differ SWC /EBS-M5008)2,3,4			UEP9D	UEPU4	2.28	164.57	128.16					40.18	9.45		
		2-Wire Voice Grade Port (Centrex/differ SWC /EBS-M5208)2,3,4			UEP9D	UEPU5	2.28	164.57	128.16					40.18	9.45		
		2-Wire Voice Grade Port (Centrex/differ SWC /EBS-M5216)2,3,4			UEP9D	UEPU6	2.28	164.57	128.16					40.18	9.45		
		2-Wire Voice Grade Port (Centrex/differ SWC /EBS-M5316)2,3,4			UEP9D	UEPU7	2.28	164.57	128.16					40.18	9.45		

UNBUNDLED NETWORK ELEMENTS - North Carolina														Attachment: 2		Exhibit: A	
CATEGORY	RATE ELEMENTS	Interim	Zone	BCS	USOC	RATES ($)					Svc Order Submitted Elec per LSR	Svc Order Submitted Manually per LSR	Incremental Charge - Manual Svc Order vs. Electronic-1st	Incremental Charge - Manual Svc Order vs. Electronic-Add'l	Incremental Charge - Manual Svc Order vs. Electronic-Disc 1st	Incremental Charge - Manual Svc Order vs. Electronic-Disc Add'l
						Rec	Nonrecurring		Nonrecurring Disconnect		OSS Rates ($)					
							First	Add'l	First	Add'l	SOMEC	SOMAN	SOMAN	SOMAN	SOMAN	SOMAN
	2-Wire Voice Grade Port, Diff Serving Wire Center - 800 Service Term 2,3			UEP9D	UEPUZ	2.28	164.57	128.16					40.18	9.45		
	2-Wire Voice Grade Port terminated in on Megalink or equivalent			UEP9D	UEPU9	2.28	79.59	63.97					40.18	9.45		
	2-Wire Voice Grade Port Terminated on 800 Service Term			UEP9D	UEPU2	2.28	79.59	63.97					40.18	9.45		
Local Switching																
	Centrex Intercom Funtionality, per port			UEP9D	URECS	0.903										
Local Number Portability																
	Local Number Portability (1 per port)			UEP9D	LNPCC	0.35										
Features																
	All Standard Features Offered, per port			UEP9D	UEPVF	3.40										
	All Select Features Offered, per port			UEP9D	UEPVS	0.00	457.83						40.18	9.45		
	All Centrex Control Features Offered, per port			UEP9D	UEPVC	3.40										
NARS																
	Unbundled Network Access Register - Combination			UEP9D	UARCX	0.00	0.00	0.00	0.00	0.00		0.00	40.18	9.45		
	Unbundled Network Access Register - Inward			UEP9D	UAR1X	0.00	0.00	0.00	0.00	0.00		0.00	40.18	9.45		
	Unbundled Network Access Register - Outdial			UEP9D	UAROX	0.00	0.00	0.00	0.00	0.00		0.00	40.18	9.45		
Miscellaneous Terminations																
2-Wire Trunk Side																
	Trunk Side Terminations, each			UEP9D	CEND6	12.36										
4-Wire Digital (1.544 Megabits)																
	DS1 Circuit Terminations, each			UEP9D	M1HD1	123.65							40.18	9.45		
	DS0 Channels Activiated per Channel			UEP9D	M1HDO	0.00	28.81						40.18	9.45		
Interoffice Channel Mileage - 2-Wire																
	Interoffice Channel Facilities Termination			UEP9D	M1GBC	18.00										
	Interoffice Channel mileage, per mile or fraction of mile			UEP9D	M1GBM	0.0282										
Feature Activations (DS0) Centrex Loops on Channelized DS1 Service																
D4 Channel Bank Feature Activations																
	Feature Activation on D-4 Channel Bank Centrex Loop Slot			UEP9D	1PQWS	0.65										
	Feature Activation on D-4 Channel Bank FX line Side Loop Slot			UEP9D	1PQW6	0.65										
	Feature Activation on D-4 Channel Bank FX Trunk Side Loop Slot			UEP9D	1PQW7	0.65										
	Feature Activation on D-4 Channel Bank Centrex Loop Slot - Different Wire Center			UEP9D	1PQWP	0.65										
	Feature Activation on D-4 Channel Bank Private Line Loop Slot			UEP9D	1PQWV	0.65										
	Feature Activation on D-4 Channel Bank Tjie Line/Trunk Loop Slot			UEP9D	1PQWQ	0.65										
	Feature Activation on D-4 Channel Bank WATS Loop Slot			UEP9D	1PQWA	0.65										
Non-Recurring Charges (NRC) Associated with UNE-P Centrex																
	NRC Conversion Currently Combined Switch-As-Is with allowed changes, per port			UEP9D	USAC2		2.77	0.40					40.18	9.45		
	New Centrex Standard Common Block			UEP9D	M1ACS	0.00	695.11						40.18	9.45		
	New Centrex Customized Common Block			UEP9D	M1ACC	0.00	695.11						40.18	9.45		
	NAR Establishment Charge, Per Occasion			UEP9D	URECA	0.00	72.73						40.18	9.45		
Additional Non-Recurring Charges (NRC)																
	Unbundled Miscellaneous Rate Element, Tag Loop at End Use Premise			UEP9D	URETL		8.33	0.83								
	Unbundled Miscellaneous Rate Element, Tag Design Loop at End Use Premise			UEP9D	URETN		11.20	1.10								
Note 1 - Required Port for Centrex Control in 1AESS, 5ESS & EWSD																
Note 2 - Requres Interoffice Channel Mileage																
Note 3 - Installation is combination of Installation charge for SL2 Loop and Port																
Note 4 - Requires Specific Customer Premises Equipment																
Note: Rates displaying an "R" in Interim column are interim and subject to rate true-up as set forth in General Terms and Conditions.																

UNBUNDLED NETWORK ELEMENTS - South Carolina														Attachment: 2		Exhibit: A	
CATEGORY		RATE ELEMENTS	Interim	Zone	BCS	USOC	RATES ($)					Svc Order Submitted Elec per LSR	Svc Order Submitted Manually per LSR	Incremental Charge - Manual Svc Order vs. Electronic-1st	Incremental Charge - Manual Svc Order vs. Electronic-Add'l	Incremental Charge - Manual Svc Order vs. Electronic-Disc 1st	Incremental Charge - Manual Svc Order vs. Electronic-Disc Add'l
							Rec	Nonrecurring		Nonrecurring Disconnect		OSS Rates ($)					
								First	Add'l	First	Add'l	SOMEC	SOMAN	SOMAN	SOMAN	SOMAN	SOMAN
	The "Zone" shown in the sections for stand-alone loops or loops as part of a combination refers to Geographically Deaveraged UNE Zones. To view Geographically Deaveraged UNE Zone Designations by Central Office, refer to internet Website: http://www.interconnection.bellsouth.com/become_a_clec/html/interconnection.htm																
OPERATIONAL SUPPORT SYSTEMS (OSS) - "REGIONAL RATES"																	
	NOTE: (1) CLEC should contact its contract negotiator if it prefers the "state specific" OSS charges as ordered by the State Commissions. The OSS charges currently contained in this rate exhibit are the BellSouth "regional" service ordering charges. CLEC may elect either the state specific Commission ordered rates for the service ordering charges, or CLEC may elect the regional service ordering charge, however, CLEC can not obtain a mixture of the two regardless if CLEC has a interconnection contract established in each of the 9 states.																
	NOTE: (2) Any element that can be ordered electronically will be billed according to the SOMEC rate listed in this category. Please refer to BellSouth's Local Ordering Handbook (LOH) to determine if a product can be ordered electronically. For those elements that cannot be ordered electronically at present per the LOH, the listed SOMEC rate in this category reflects the charge that would be billed to a CLEC once electronic ordering capabilities come on-line for that element. Otherwise, the manual ordering charge, SOMAN, will be applied to a CLECs bill when it submits an LSR to BellSouth.																
		OSS - Electronic Service Order Charge, Per Local Service Request (LSR) - UNE Only				SOMEC		3.50	0.00	3.50	0.00						
		OSS - Manual Service Order Charge, Per Local Service Request (LSR) - UNE Only				SOMAN		15.69	0.00	1.97	0.00						
UNE SERVICE DATE ADVANCEMENT CHARGE																	
	NOTE: The Expedite charge will be maintained commensurate with BellSouth's FCC No.1 Tariff, Section 5 as applicable.																
		UNE Expedite Charge per Circuit or Line Assignable USOC, per Day			UAL, UEANL, UCL, UEF, UDF, UEQ, UDL, UENTW, UDN, UEA, UHL, ULC, USL, U1T12, U1T48, U1TD1, U1TD3, U1TDX, U1TO3, U1TS1, U1TVX, UC1BC, UC1BL, UC1CC, UC1CL, UC1DC, UC1DL, UC1EC, UC1EL, UC1FC, UC1FL, UC1GC, UC1GL, UC1HC, UC1HL, UDL12, UDL48, UDLO3, UDLSX, UE3, ULD12, ULD48, ULDD1, ULDD3, ULDDX, ULDO3, ULDS1, ULDVX, UNC1X, UNC3X, UNCDX, UNCNX, UNCSX, UNCVX, UNLD1, UNLD3, UXTD1, UXTD3, UXTS1, U1TUC, U1TUD, U1TUB, U1TUA	SDASP		200.00									
UNBUNDLED EXCHANGE ACCESS LOOP																	
	2-WIRE ANALOG VOICE GRADE LOOP																
		2-Wire Analog Voice Grade Loop - Service Level 1- Zone 1		1	UEANL	UEAL2	14.94	37.92	17.62	23.56	5.32						
		2-Wire Analog Voice Grade Loop - Service Level 1- Zone 2		2	UEANL	UEAL2	21.39	37.92	17.62	23.56	5.32						
		2-Wire Analog Voice Grade Loop - Service Level 1- Zone 3		3	UEANL	UEAL2	26.72	37.92	17.62	23.56	5.32						
		2-Wire Analog Voice Grade Loop - Service Level 1- Zone 1		1	UEANL	UEASL	14.94	37.92	17.62	23.56	5.32						
		2-Wire Analog Voice Grade Loop - Service Level 1- Zone 2		2	UEANL	UEASL	21.39	37.92	17.62	23.56	5.32						
		2-Wire Analog Voice Grade Loop - Service Level 1- Zone 3		3	UEANL	UEASL	26.72	37.92	17.62	23.56	5.32						
		Unbundled Miscellaneous Rate Element, Tag Loop at End User Premise			UEANL	URETL		8.33	0.83								
		Loop Testing - Basic 1st Half Hour			UEANL	URET1		34.23	34.23								
		Loop Testing - Basic Additional Half Hour			UEANL	URETA		19.90	19.90								

UNBUNDLED NETWORK ELEMENTS - South Carolina														Attachment: 2		Exhibit: A	
CATEGORY		RATE ELEMENTS	Interim	Zone	BCS	USOC	RATES ($)					Svc Order Submitted Elec per LSR	Svc Order Submitted Manually per LSR	Incremental Charge - Manual Svc Order vs. Electronic-1st	Incremental Charge - Manual Svc Order vs. Electronic-Add'l	Incremental Charge - Manual Svc Order vs. Electronic-Disc 1st	Incremental Charge - Manual Svc Order vs. Electronic-Disc Add'l
							Rec	Nonrecurring		Nonrecurring Disconnect		OSS Rates ($)					
								First	Add'l	First	Add'l	SOMEC	SOMAN	SOMAN	SOMAN	SOMAN	SOMAN
		CLEC to CLEC Conversion Charge Without Outside Dispatch (UVL-SL1)			UEANL	UREWO		15.81	8.96								
		Unbundled Voice Loop, Non-Design Voice Loop, billing for BST providing make-up (Engineering Information - E.I.)			UEANL	UEANM		13.47	13.47								
		Manual Order Coordination for UVL-SL1s (per loop)			UEANL	UEAMC		8.17	8.17								
		Order Coordination for Specified Conversion Time for UVL-SL1 (per LSR)			UEANL	OCOSL		18.13	18.13								
	2-WIRE Unbundled COPPER LOOP																
		2-Wire Unbundled Copper Loop - Non-Designed Zone 1	I	1	UEQ	UEQ2X	12.94	36.40	16.10	22.66	4.42						
		2 Wire Unbundled Copper Loop - Non-Designed - Zone 2	I	2	UEQ	UEQ2X	14.51	36.40	16.10	22.66	4.42						
		2 Wire Unbundled Copper Loop - Non-Designed - Zone 3	I	3	UEQ	UEQ2X	15.02	36.40	16.10	22.66	4.42						
		Unbundled Miscellaneous Rate Element, Tag Loop at End User Premise			UEQ	URETL		8.33	0.83								
		Manual Order Coordination 2 Wire Unbundled Copper Loop - Non-Designed (per loop)			UEQ	USBMC		8.17	8.17								
		Unbundled Copper Loop, Non-Design Copper Loop, billing for BST providing make-up (Engineering Information - E.I.)			UEQ	UEQMU		13.47	13.47								
		Loop Testing - Basic 1st Half Hour			UEQ	URET1		34.23	34.23								
		Loop Testing - Basic Additional Half Hour			UEQ	URETA		19.90	19.90								
		CLEC to CLEC Conversion Charge Without Outside Dispatch (UCL-ND)			UEQ	UREWO		14.30	7.45								
UNBUNDLED EXCHANGE ACCESS LOOP																	
	2-WIRE ANALOG VOICE GRADE LOOP																
		2 Wire Analog Voice Grade Loop-Service Level 1-Line Splitting-Zone 1		1	UEPSR UEPSB	UEALS	14.94	37.92	17.62	23.56	5.32						
		2 Wire Analog Voice Grade Loop-Service Level 1-Line Splitting-Zone 1		1	UEPSR UEPSB	UEABS	14.94	37.92	17.62	23.56	5.32						
		2 Wire Analog Voice Grade Loop- Service Level 1-Line Splitting-Zone 2		2	UEPSR UEPSB	UEALS	21.39	37.92	17.62	23.56	5.32						
		2 Wire Analog Voice Grade Loop- Service Level 1-Line Splitting-Zone 2		2	UEPSR UEPSB	UEABS	21.39	37.92	17.62	23.56	5.32						
		2 Wire Analog Voice Grade Loop-Service Level 1-Line Splitting-Zone 3		3	UEPSR UEPSB	UEALS	26.72	37.92	17.62	23.56	5.32						
		2 Wire Analog Voice Grade Loop-Service Level 1-Line Splitting-Zone 3		3	UEPSR UEPSB	UEABS	26.72	37.92	17.62	23.56	5.32						
UNBUNDLED EXCHANGE ACCESS LOOP																	
	2-WIRE ANALOG VOICE GRADE LOOP																
		2-Wire Analog Voice Grade Loop - Service Level 2 w/Loop or Ground Start Signaling - Zone 1		1	UEA	UEAL2	16.68	105.98	68.43	53.05	10.61						
		2-Wire Analog Voice Grade Loop - Service Level 2 w/Loop or Ground Start Signaling - Zone 2		2	UEA	UEAL2	23.13	105.98	68.43	53.05	10.61						
		2-Wire Analog Voice Grade Loop - Service Level 2 w/Loop or Ground Start Signaling - Zone 3		3	UEA	UEAL2	28.46	105.98	68.43	53.05	10.61						
		Order Coordination for Specified Conversion Time (per LSR)			UEA	OCOSL		18.13									
		2-Wire Analog Voice Grade Loop - Service Level 2 w/Reverse Battery Signaling - Zone 1		1	UEA	UEAR2	16.68	105.98	68.43	53.05	10.61						
		2-Wire Analog Voice Grade Loop - Service Level 2 w/Reverse Battery Signaling - Zone 2		2	UEA	UEAR2	23.13	105.98	68.43	53.05	10.61						
		2-Wire Analog Voice Grade Loop - Service Level 2 w/Reverse Battery Signaling - Zone 3		3	UEA	UEAR2	28.46	105.98	68.43	53.05	10.61						
		Order Coordination for Specified Conversion Time (per LSR)			UEA	OCOSL		18.13									
		CLEC to CLEC Conversion Charge without outside dispatch			UEA	UREWO		87.90	36.44								
		Loop Tagging - Service Level 2 (SL2)			UEA	URETL		11.24	1.10								
	4-WIRE ANALOG VOICE GRADE LOOP																
		4-Wire Analog Voice Grade Loop - Zone 1		1	UEA	UEAL4	32.59	132.38	94.83	59.35	14.61						
		4-Wire Analog Voice Grade Loop - Zone 2		2	UEA	UEAL4	43.89	132.38	94.83	59.35	14.61						
		4-Wire Analog Voice Grade Loop - Zone 3		3	UEA	UEAL4	43.38	132.38	94.83	59.35	14.61						
		Order Coordination for Specified Conversion Time (per LSR)			UEA	OCOSL		18.13									
		CLEC to CLEC Conversion Charge without outside dispatch			UEA	UREWO		87.90	36.44								

UNBUNDLED NETWORK ELEMENTS - South Carolina														Attachment: 2		Exhibit: A	
CATEGORY		RATE ELEMENTS	Interim	Zone	BCS	USOC	RATES ($)					Svc Order Submitted Elec per LSR	Svc Order Submitted Manually per LSR	Incremental Charge - Manual Svc Order vs. Electronic-1st	Incremental Charge - Manual Svc Order vs. Electronic-Add'l	Incremental Charge - Manual Svc Order vs. Electronic-Disc 1st	Incremental Charge - Manual Svc Order vs. Electronic-Disc Add'l
							Rec	Nonrecurring		Nonrecurring Disconnect		OSS Rates ($)					
								First	Add'l	First	Add'l	SOMEC	SOMAN	SOMAN	SOMAN	SOMAN	SOMAN
	2-WIRE ISDN DIGITAL GRADE LOOP																
		2-Wire ISDN Digital Grade Loop - Zone 1		1	UDN	U1L2X	25.21	117.58	80.03	53.05	10.61						
		2-Wire ISDN Digital Grade Loop - Zone 2		2	UDN	U1L2X	32.76	117.58	80.03	53.05	10.61						
		2-Wire ISDN Digital Grade Loop - Zone 3		3	UDN	U1L2X	37.70	117.58	80.03	53.05	10.61						
		Order Coordination For Specified Conversion Time (per LSR)			UDN	OCOSL		18.13									
		CLEC to CLEC Conversion Charge without outside dispatch			UDN	UREWO		91.82	44.25								
	2-WIRE ASYMMETRICAL DIGITAL SUBSCRIBER LINE (ADSL) COMPATIBLE LOOP																
		2 Wire Unbundled ADSL Loop including manual service inquiry & facility reservation - Zone 1		1	UAL	UAL2X	12.19	120.84	70.56	50.37	7.93						
		2 Wire Unbundled ADSL Loop including manual service inquiry & facility reservation - Zone 2		2	UAL	UAL2X	13.71	120.84	70.56	50.37	7.93						
		2 Wire Unbundled ADSL Loop including manual service inquiry & facility reservation - Zone 3		3	UAL	UAL2X	14.14	120.84	70.56	50.37	7.93						
		Order Coordination for Specified Conversion Time (per LSR)			UAL	OCOSL		18.13									
		2 Wire Unbundled ADSL Loop without manual service inquiry & facility reservaton - Zone 1		1	UAL	UAL2W	12.19	95.81	57.82	50.37	7.93						
		2 Wire Unbundled ADSL Loop without manual service inquiry & facility reservaton - Zone 2		2	UAL	UAL2W	13.71	95.81	57.82	50.37	7.93						
		2 Wire Unbundled ADSL Loop without manual service inquiry & facility reservaton - Zone 3		3	UAL	UAL2W	14.14	95.81	57.82	50.37	7.93						
		Order Coordination for Specified Conversion Time (per LSR)			UAL	OCOSL		18.13									
		CLEC to CLEC Conversion Charge without outside dispatch			UAL	UREWO		86.38	40.48								
	2-WIRE HIGH BIT RATE DIGITAL SUBSCRIBER LINE (HDSL) COMPATIBLE LOOP																
		2 Wire Unbundled HDSL Loop including manual service inquiry & facility reservation - Zone 1		1	UHL	UHL2X	9.58	129.52	79.24	50.37	7.93						
		2 Wire Unbundled HDSL Loop including manual service inquiry & facility reservation - Zone 2		2	UHL	UHL2X	10.92	129.52	79.24	50.37	7.93						
		2 Wire Unbundled HDSL Loop including manual service inquiry & facility reservation - Zone 3		3	UHL	UHL2X	11.40	129.52	79.24	50.37	7.93						
		Order Coordination for Specified Conversion Time (per LSR)			UHL	OCOSL		18.13									
		2 Wire Unbundled HDSL Loop without manual service inquiry and facility reservation - Zone 1		1	UHL	UHL2W	9.58	104.49	66.50	50.37	7.93						
		2 Wire Unbundled HDSL Loop without manual service inquiry and facility reservation - Zone 2		2	UHL	UHL2W	10.92	104.49	66.50	50.37	7.93						
		2 Wire Unbundled HDSL Loop without manual service inquiry and facility reservation - Zone 3		3	UHL	UHL2W	11.40	104.49	66.50	50.37	7.93						
		Order Coordination for Specified Conversion Time (per LSR)			UHL	OCOSL		18.13									
		CLEC to CLEC Conversion Charge without outside dispatch			UHL	UREWO		86.32	40.48								
	4-WIRE HIGH BIT RATE DIGITAL SUBSCRIBER LINE (HDSL) COMPATIBLE LOOP																
		4 Wire Unbundled HDSL Loop including manual service inquiry and facility reservation - Zone 1		1	UHL	UHL4X	16.02	158.18	107.89	55.12	10.38						
		4-Wire Unbundled HDSL Loop including manual service inquiry and facility reservation - Zone 2		2	UHL	UHL4X	14.33	158.18	107.89	55.12	10.38						
		4-Wire Unbundled HDSL Loop including manual service inquiry and facility reservation - Zone 3		3	UHL	UHL4X	16.84	158.18	107.89	55.12	10.38						
		Order Coordination for Specified Conversion Time (per LSR)			UHL	OCOSL		18.13									
		4-Wire Unbundled HDSL Loop without manual service inquiry and facility reservation - Zone 1		1	UHL	UHL4W	16.02	133.14	95.16	55.12	10.38						
		4-Wire Unbundled HDSL Loop without manual service inquiry and facility reservation - Zone 2		2	UHL	UHL4W	14.33	133.14	95.16	55.12	10.38						
		4-Wire Unbundled HDSL Loop without manual service inquiry and facility reservation - Zone 3		3	UHL	UHL4W	16.84	133.14	95.16	55.12	10.38						
		Order Coordination for Specified Conversion Time (per LSR)			UHL	OCOSL		18.13									
		CLEC to CLEC Conversion Charge without outside dispatch			UHL	UREWO		86.32	40.48								
	4-WIRE DS1 DIGITAL LOOP																
		4-Wire DS1 Digital Loop - Zone 1		1	USL	USLXX	79.51	253.03	157.89	44.80	11.73						
		4-Wire DS1 Digital Loop - Zone 2		2	USL	USLXX	136.00	253.03	157.89	44.80	11.73						
		4-Wire DS1 Digital Loop - Zone 3		3	USL	USLXX	229.15	253.03	157.89	44.80	11.73						
		Order Coordination for Specified Conversion Time (per LSR)			USL	OCOSL		18.13									

UNBUNDLED NETWORK ELEMENTS - South Carolina														Attachment: 2		Exhibit: A	
CATEGORY		RATE ELEMENTS	Interim	Zone	BCS	USOC	RATES ($)					Svc Order Submitted Elec per LSR	Svc Order Submitted Manually per LSR	Incremental Charge - Manual Svc Order vs. Electronic-1st	Incremental Charge - Manual Svc Order vs. Electronic-Add'l	Incremental Charge - Manual Svc Order vs. Electronic-Disc 1st	Incremental Charge - Manual Svc Order vs. Electronic-Disc Add'l
							Rec	Nonrecurring		Nonrecurring Disconnect		OSS Rates ($)					
								First	Add'l	First	Add'l	SOMEC	SOMAN	SOMAN	SOMAN	SOMAN	SOMAN
		CLEC to CLEC Conversion Charge without outside dispatch			USL	UREWO		101.30	43.13								
	4-WIRE 19.2, 56 OR 64 KBPS DIGITAL GRADE LOOP																
		4 Wire Unbundled Digital 19.2 Kbps		1	UDL	UDL19	29.93	126.66	89.12	59.35	14.61						
		4 Wire Unbundled Digital 19.2 Kbps		2	UDL	UDL19	33.99	126.66	89.12	59.35	14.61						
		4 Wire Unbundled Digital 19.2 Kbps		3	UDL	UDL19	34.74	126.66	89.12	59.35	14.61						
		4 Wire Unbundled Digital Loop 56 Kbps - Zone 1		1	UDL	UDL56	29.93	126.66	89.12	59.35	14.61						
		4 Wire Unbundled Digital Loop 56 Kbps - Zone 2		2	UDL	UDL56	33.99	126.66	89.12	59.35	14.61						
		4 Wire Unbundled Digital Loop 56 Kbps - Zone 3		3	UDL	UDL56	34.74	126.66	89.12	59.35	14.61						
		Order Coordination for Specified Conversion Time (per LSR)			UDL	OCOSL		18.13									
		4 Wire Unbundled Digital Loop 64 Kbps - Zone 1		1	UDL	UDL64	29.93	126.66	89.12	59.35	14.61						
		4 Wire Unbundled Digital Loop 64 Kbps - Zone 2		2	UDL	UDL64	33.99	126.66	89.12	59.35	14.61						
		4 Wire Unbundled Digital Loop 64 Kbps - Zone 3		3	UDL	UDL64	34.74	126.66	89.12	59.35	14.61						
		Order Coordination for Specified Conversion Time (per LSR)			UDL	OCOSL		18.13									
		CLEC to CLEC Conversion Charge without outside dispatch			UDL	UREWO		102.34	49.85								
	2-WIRE Unbundled COPPER LOOP																
		2-Wire Unbundled Copper Loop-Designed including manual service inquiry & facility reservation - Zone 1		1	UCL	UCLPB	12.19	119.91	69.62	50.37	7.93						
		2-Wire Unbundled Copper Loop-Designed including manual service inquiry & facility reservation - Zone 2		2	UCL	UCLPB	13.71	119.91	69.62	50.37	7.93						
		2 Wire Unbundled Copper Loop-Designed including manual service inquiry & facility reservation - Zone 3		3	UCL	UCLPB	14.14	119.91	69.62	50.37	7.93						
		Order Coordination for Unbundled Copper Loops (per loop)			UCL	UCLMC		8.17	8.17								
		2-Wire Unbundled Copper Loop-Designed without manual service inquiry and facility reservation - Zone 1		1	UCL	UCLPW	12.19	94.87	56.89	50.37	7.93						
		2-Wire Unbundled Copper Loop-Designed without manual service inquiry and facility reservation - Zone 2		2	UCL	UCLPW	13.71	94.87	56.89	50.37	7.93						
		2-Wire Unbundled Copper Loop-Designed without manual service inquiry and facility reservation - Zone 3		3	UCL	UCLPW	14.14	94.87	56.89	50.37	7.93						
		Order Coordination for Unbundled Copper Loops (per loop)			UCL	UCLMC		8.17	8.17								
		CLEC to CLEC Conversion Charge without outside dispatch (UCL-Des)			UCL	UREWO		94.87	42.57								
	4-WIRE COPPER LOOP																
		4-Wire Copper Loop-Designed including manual service inquiry and facility reservation - Zone 1		1	UCL	UCL4S	19.64	144.17	93.88	55.12	10.38						
		4-Wire Copper Loop-Designed including manual service inquiry and facility reservation - Zone 2		2	UCL	UCL4S	20.90	144.17	93.88	55.12	10.38						
		4-Wire Copper Loop-Designed including manual service inquiry and facility reservation - Zone 3		3	UCL	UCL4S	19.34	144.17	93.88	55.12	10.38						
		Order Coordination for Unbundled Copper Loops (per loop)			UCL	UCLMC		8.17	8.17								
		4-Wire Copper Loop-Designed without manual service inquiry and facility reservation - Zone 1		1	UCL	UCL4W	19.64	119.13	81.15	55.12	10.38						
		4-Wire Copper Loop-Designed without manual service inquiry and facility reservation - Zone 2		2	UCL	UCL4W	20.90	119.13	81.15	55.12	10.38						
		4-Wire Copper Loop-Designed without manual service inquiry and facility reservation - Zone 3		3	UCL	UCL4W	19.34	119.13	81.15	55.12	10.38						
		Order Coordination for Unbundled Copper Loops (per loop)			UCL	UCLMC		8.17	8.17								
		CLEC to CLEC Conversion Charge without outside dispatch (UCL-Des)			UCL	UREWO		94.87	42.57								
LOOP MODIFICATION																	
		Unbundled Loop Modification, Removal of Load Coils - 2 Wire pair less than or equal to 18k ft, per Unbundled Loop			UAL, UHL, UCL, UEQ, ULS, UEA, UEANL, UEPSR, UEPSB	ULM2L		32.46	32.46								
		Unbundled Loop Modification Removal of Load Coils - 4 Wire less than or equal to 18K ft, per Unbundled Loop			UHL, UCL, UEA	ULM4L		32.46	32.46								
		Unbundled Loop Modification Removal of Bridged Tap Removal, per unbundled loop			UAL, UHL, UCL, UEQ, ULS, UEA, UEANL, UEPSR, UEPSB	ULMBT		32.48	32.48								

UNBUNDLED NETWORK ELEMENTS - South Carolina														Attachment: 2		Exhibit: A	
CATEGORY		RATE ELEMENTS	Interim	Zone	BCS	USOC	RATES ($)					Svc Order Submitted Elec per LSR	Svc Order Submitted Manually per LSR	Incremental Charge - Manual Svc Order vs. Electronic-1st	Incremental Charge - Manual Svc Order vs. Electronic-Add'l	Incremental Charge - Manual Svc Order vs. Electronic-Disc 1st	Incremental Charge - Manual Svc Order vs. Electronic-Disc Add'l
							Rec	Nonrecurring		Nonrecurring Disconnect		OSS Rates ($)					
								First	Add'l	First	Add'l	SOMEC	SOMAN	SOMAN	SOMAN	SOMAN	SOMAN
SUB-LOOPS																	
	Sub-Loop Distribution																
		Sub-Loop - Per Cross Box Location - CLEC Feeder Facility Set-Up	I		UEANL	USBSA		241.42	241.42								
		Sub-Loop - Per Cross Box Location - Per 25 Pair Panel Set-Up	I		UEANL	USBSB		22.69	22.69								
		Sub-Loop - Per Building Equipment Room - CLEC Feeder Facility Set-Up	I		UEANL	USBSC		177.84	177.84								
		Sub-Loop - Per Building Equipment Room - Per 25 Pair Panel Set-Up	I		UEANL	USBSD		55.58	55.58								
		Sub-Loop Distribution Per 2-Wire Analog Voice Grade Loop - Zone 1	I	1	UEANL	USBN2	8.87	65.94	31.03	45.35	6.71						
		Sub-Loop Distribution Per 2-Wire Analog Voice Grade Loop - Zone 2	I	2	UEANL	USBN2	12.58	65.94	31.03	45.35	6.71						
		Sub-Loop Distribution Per 2-Wire Analog Voice Grade Loop - Zone 3	I	3	UEANL	USBN2	14.79	65.94	31.03	45.35	6.71						
		Order Coordination for Unbundled Sub-Loops, per sub-loop pair			UEANL	USBMC		8.17	8.17								
		Sub-Loop Distribution Per 4-Wire Analog Voice Grade Loop - Zone 1		1	UEANL	USBN4	14.11	79.21	44.29	49.82	9.09						
		Sub-Loop Distribution Per 4-Wire Analog Voice Grade Loop - Zone 2		2	UEANL	USBN4	19.40	79.21	44.29	49.82	9.09						
		Sub-Loop Distribution Per 4-Wire Analog Voice Grade Loop - Zone 3		3	UEANL	USBN4	18.90	79.21	44.29	49.82	9.09						
		Order Coordination for Unbundled Sub-Loops, per sub-loop pair			UEANL	USBMC		8.17	8.17								
		Sub-Loop 2-Wire Intrabuilding Network Cable (INC)	I		UEANL	USBR2	2.41	53.13	18.21	45.35	6.71						
		Order Coordination for Unbundled Sub-Loops, per sub-loop pair			UEANL	USBMC		8.17	8.17								
		Sub-Loop 4-Wire Intrabuilding Network Cable (INC)	I		UEANL	USBR4	5.36	59.38	24.47	49.82	9.09						
		Order Coordination for Unbundled Sub-Loops, per sub-loop pair			UEANL	USBMC		8.17	8.17								
		Loop Testing - Basic 1st Half Hour			UEANL	URET1		34.23	34.23								
		Loop Testing - Basic Additional Half Hour			UEANL	URETA		19.90	19.90								
		2 Wire Copper Unbundled Sub-Loop Distribution - Zone 1	I	1	UEF	UCS2X	7.11	65.94	31.03	45.35	6.71						
		2 Wire Copper Unbundled Sub-Loop Distribution - Zone 2	I	2	UEF	UCS2X	9.83	65.94	31.03	45.35	6.71						
		2 Wire Copper Unbundled Sub-Loop Distribution - Zone 3	I	3	UEF	UCS2X	10.48	65.94	31.03	45.35	6.71						
		Order Coordination for Unbundled Sub-Loops, per sub-loop pair			UEF	USBMC		8.17	8.17								
		4 Wire Copper Unbundled Sub-Loop Distribution - Zone 1	I	1	UEF	UCS4X	7.85	79.21	44.29	49.82	9.09						
		4 Wire Copper Unbundled Sub-Loop Distribution - Zone 2	I	2	UEF	UCS4X	14.17	79.21	44.29	49.82	9.09						
		4 Wire Copper Unbundled Sub-Loop Distribution - Zone 3	I	3	UEF	UCS4X	12.64	79.21	44.29	49.82	9.09						
		Order Coordination for Unbundled Sub-Loops, per sub-loop pair			UEF	USBMC		8.17	8.17								
		Loop Testing - Basic 1st Half Hour			UEF	URET1		34.23	34.23								
		Loop Testing - Basic Additional Half Hour			UEF	URETA		19.90	19.90								
	Unbundled Network Terminating Wire (UNTW)																
		Unbundled Network Terminating Wire (UNTW) per Pair			UENTW	UENPP	0.3303	30.20	30.20								
	Network Interface Device (NID)																
		Network Interface Device (NID) - 1-2 lines			UENTW	UND12		43.68	28.79								
		Network Interface Device (NID) - 1-6 lines			UENTW	UND16		64.42	49.53								
		Network Interface Device Cross Connect - 2 W			UENTW	UNDC2		5.92	5.92								
		Network Interface Device Cross Connect - 4W			UENTW	UNDC4		5.92	5.92								
UNE OTHER, PROVISIONING ONLY - NO RATE																	
		NID - Dispatch and Service Order for NID installation			UENTW	UNDBX	0.00	0.00									
		UNTW Circuit Id Establishment, Provisioning Only - No Rate			UENTW	UENCE	0.00	0.00									
		Unbundled Contract Name, Provisioning Only - No Rate			UEANL,UEF,UEQ,UENTW	UNECN	0.00	0.00									
UNE OTHER, PROVISIONING ONLY - NO RATE																	

UNBUNDLED NETWORK ELEMENTS - South Carolina														Attachment: 2		Exhibit: A	
CATEGORY		RATE ELEMENTS	Interim	Zone	BCS	USOC	RATES ($)					Svc Order Submitted Elec per LSR	Svc Order Submitted Manually per LSR	Incremental Charge - Manual Svc Order vs. Electronic-1st	Incremental Charge - Manual Svc Order vs. Electronic-Add'l	Incremental Charge - Manual Svc Order vs. Electronic-Disc 1st	Incremental Charge - Manual Svc Order vs. Electronic-Disc Add'l
							Rec	Nonrecurring		Nonrecurring Disconnect		OSS Rates ($)					
								First	Add'l	First	Add'l	SOMEC	SOMAN	SOMAN	SOMAN	SOMAN	SOMAN
		Unbundled Contact Name, Provisioning Only - no rate			UAL,UCL,UDC,UDL, UDN,UEA,UHL,ULC	UNECN	0.00	0.00									
		Unbundled Sub-Loop Feeder-2 Wire Cross Box Jumper - no rate			UEA,UDN,UCL,UDC	USBFQ	0.00	0.00									
		Unbundled Sub-Loop Feeder-4 Wire Cross Box Jumper - no rate			UEA,USL,UCL,UDL	USBFR	0.00	0.00									
		Unbundled DS1 Loop - Superframe Format Option - no rate			USL	CCOSF	0.00	0.00									
		Unbundled DS1 Loop - Expanded Superframe Format option - no rate			USL	CCOEF	0.00	0.00									
HIGH CAPACITY UNBUNDLED LOCAL LOOP																	
		High Capacity Unbundled Local Loop - DS3 - Per Mile per month			UE3	1L5ND	12.26										
		High Capacity Unbundled Local Loop - DS3 - Facility Termination per month			UE3	UE3PX	306.36	452.52	264.53	119.75	83.77						
		High Capacity Unbundled Local Loop - STS-1 - Per Mile per month			UDLSX	1L5ND	12.26										
		High Capacity Unbundled Local Loop - STS-1 - Facility Termination per month			UDLSX	UDLS1	313.49	452.52	264.53	119.75	83.77						
LOOP MAKE-UP																	
		Loop Makeup - Preordering Without Reservation, per working or spare facility queried (Manual).			UMK	UMKLW		24.04	24.04								
		Loop Makeup - Preordering With Reservation, per spare facility queried (Manual).			UMK	UMKLP		25.49	25.49								
		Loop Makeup--With or Without Reservation, per working or spare facility queried (Mechanized)			UMK	UMKMQ		0.34	0.34								
LINE SHARING AND LINE SPLITTING																	
	NOTE 1: The Line Sharing monthly recurring rates for all installations completed from October 02, 2003 through midnight October 01, 2004 shall be billed as follows:																
	NOTE 1: 10/02/2003 – 10/01/2004: 25% of the rate for an unbundled copper loop non-designed ("UCLND")																
	NOTE 1: 10/02/2004 – 10/01/2005: 50% of the rate for UCLND																
	NOTE 1: 10/02/2005 – 10/01/2006: 75% of the rate for UCLND																
	NOTE 1: Above will apply to USOCS: ULSDT and ULSCT																
	****NOTE 2: The Line Sharing monthly recurring rates with USOCs ULSDC and ULSCC applies only to circuits installed and inservice on or before October 1, 2003**																
	LINE SHARING																
	SPLITTERS-CENTRAL OFFICE BASED																
		Line Sharing Splitter, per System 96 Line Capacity			ULS	ULSDA	216.22	189.21	0.00	178.38	0.00						
		Line Sharing Splitter, per System 24 Line Capacity			ULS	ULSDB	54.05	189.21	0.00	178.38	0.00						
		Line Sharing Splitter, Per System, 8 Line Capacity			ULS	ULSD8	18.02	189.21	0.00	178.38	0.00						
		Line Sharing-DLEC Owned Splitter in CO-CFA activaton-deactivation (per LSOD)			ULS	ULSDG		86.67	0.00	49.95	0.00						
	END USER ORDERING-CENTRAL OFFICE BASED LINE SHARING																
		Line Sharing - per Line Activation (BST Owned splitter) - OBSOLETE see **NOTE 2			ULS	ULSDC	0.61	18.55	10.62	10.04	4.93						
		Line Share Service, TRO per line activation, BST owned splitter - Central Office Located (25% of UCLND) - please see NOTE 1 (E:10/2/2003)			ULS	ULSDT	3.24	18.55	10.62	10.04	4.93						
		Line Share Service, TRO per line activation, BST owned splitter - Central Office Located (50% of UCLND) - please see NOTE 1 (E:10/2/2004)			ULS	ULSDT	6.47	18.55	10.62	10.04	4.93						
		Line Share Service, TRO per line activation, BST owned splitter - Central Office Located (75% of UCLND) - please see NOTE 1 (E:10/2/2005)			ULS	ULSDT	9.71	18.55	10.62	10.04	4.93						
		Line Sharing - per Subsequent Activity per Line Rearrangement(BST Owned Splitter)			ULS	ULSDS		16.42	8.21								
		Line Sharing - per Subsequent Activity per Line Rearrangement(DLEC Owned Splitter)			ULS	ULSCS		16.42	8.21								
		Line Sharing - per Line Activation (DLEC owned Splitter) - OBSOLETE see **NOTE 2			ULS	ULSCC	0.61	47.44	19.31	20.67	12.74						

UNBUNDLED NETWORK ELEMENTS - South Carolina														Attachment: 2		Exhibit: A	
CATEGORY		RATE ELEMENTS	Interim	Zone	BCS	USOC	RATES ($)					Svc Order Submitted Elec per LSR	Svc Order Submitted Manually per LSR	Incremental Charge - Manual Svc Order vs. Electronic-1st	Incremental Charge - Manual Svc Order vs. Electronic-Add'l	Incremental Charge - Manual Svc Order vs. Electronic-Disc 1st	Incremental Charge - Manual Svc Order vs. Electronic-Disc Add'l
							Rec	Nonrecurring		Nonrecurring Disconnect		OSS Rates ($)					
								First	Add'l	First	Add'l	SOMEC	SOMAN	SOMAN	SOMAN	SOMAN	SOMAN
		Line Share Service, TRO per line activation, CLEC owned splitter - Central Office Located (25% of UCLND) - please see NOTE 1 (E:10/2/2003)			ULS	ULSCT	3.24	47.44	19.31	20.67	12.74						
		Line Share Service, TRO per line activation, CLEC owned splitter - Central Office Located (50% of UCLND) - please see NOTE 1 (E:10/2/2004)			ULS	ULSCT	6.47	47.44	19.31	20.67	12.74						
		Line Share Service, TRO per line activation, CLEC owned splitter - Central Office Located (75% of UCLND) - please see NOTE 1 (E:10/2/2005)			ULS	ULSCT	9.71	47.44	19.31	20.67	12.74						
	LINE SPLITTING																
	END USER ORDERING-CENTRAL OFFICE BASED																
		Line Splitting - per line activation DLEC owned splitter			UEPSR UEPSB	UREOS	0.61										
		Line Splitting - per line activation BST owned - physical			UEPSR UEPSB	UREBP	0.61	37.09	21.24	20.07	9.85						
		Line Splitting - per line activation BST owned - virtual			UEPSR UEPSB	UREBV	0.61	37.09	21.24	20.07	9.85						
	MAINTENANCE																
		No Trouble Found - per 1/2 hour increments - Basic						80.00	55.00								
		No Trouble Found - per 1/2 hour increments - Overtime						120.00	82.50								
		No Trouble Found - per 1/2 hour increments - Premium						160.00	110.00								
UNBUNDLED DEDICATED TRANSPORT																	
	INTEROFFICE CHANNEL - DEDICATED TRANSPORT																
		Interoffice Channel - Dedicated Transport - 2-Wire Voice Grade - Per Mile per month			U1TVX	1L5XX	0.0167										
		Interoffice Channel - Dedicated Transport- 2- Wire Voice Grade - Facility Termination			U1TVX	U1TV2	24.30	40.63	27.47	16.77	6.91						
		Interoffice Channel - Dedicated Transpor t- 2-Wire Voice Grade Rev Bat. - Per Mile per month			U1TVX	1L5XX	0.0167										
		Interoffice Channel - Dedicated Transport- 2- Wire VG Rev Bat. - Facility Termination			U1TVX	U1TR2	24.30	40.63	27.47	16.77	6.91						
		Interoffice Channel - Dedicated Transport - 4-Wire Voice Grade - Per Mile per month			U1TVX	1L5XX	0.0167										
		Interoffice Channel - Dedicated Transport - 4- Wire Voice Grade - Facility Termination			U1TVX	U1TV4	21.29	40.63	27.47	16.77	6.91						
		Interoffice Channel - Dedicated Transport - 56 kbps - per mile per month			U1TDX	1L5XX	0.0167										
		Interoffice Channel - Dedicated Transport - 56 kbps - Facility Termination			U1TDX	U1TD5	16.76	40.63	27.47	16.77	6.91						
		Interoffice Channel - Dedicated Transport - 64 kbps - per mile per month			U1TDX	1L5XX	0.0167										
		Interoffice Channel - Dedicated Transport - 64 kbps - Facility Termination			U1TDX	U1TD6	16.76	40.63	27.47	16.77	6.91						
		Interoffice Channel - Dedicated Channel - DS1 - Per Mile per month			U1TD1	1L5XX	0.3415										
		Interoffice Channel - Dedicated Tranport - DS1 - Facility Termination			U1TD1	U1TF1	77.14	89.47	81.99	16.39	14.48						
		Interoffice Channel - Dedicated Transport - DS3 - Per Mile per month			U1TD3	1L5XX	8.02										
		Interoffice Channel - Dedicated Transport - DS3 - Facility Termination per month			U1TD3	U1TF3	880.65	279.37	163.12	60.33	58.59						
		Interoffice Channel - Dedicated Transport - STS-1 - Per Mile per month			U1TS1	1L5XX	8.02										
		Interoffice Channel - Dedicated Transport - STS-1 - Facility Termination			U1TS1	U1TFS	880.55	279.37	163.12	60.33	58.59						
DARK FIBER																	
		Dark Fiber, Four Fiber Strands, Per Route Mile or Fraction Thereof per month - Interoffice Channel			UDF, UDFCX	1L5DF	36.41										
		NRC Dark Fiber - Interoffice Channel			UDF, UDFCX	UDF14		640.51	138.17	317.76	198.11						
		Dark Fiber, Four Fiber Strands, Per Route Mile or Fraction Thereof per month - Local Loop			UDF, UDFCX	1L5DL	97.65										
		NRC Dark Fiber - Local Loop			UDF, UDFCX	UDFL4		640.51	138.17	317.76	198.11						

UNBUNDLED NETWORK ELEMENTS - South Carolina														Attachment: 2		Exhibit: A	
CATEGORY		RATE ELEMENTS	Interim	Zone	BCS	USOC	RATES ($)					Svc Order Submitted Elec per LSR	Svc Order Submitted Manually per LSR	Incremental Charge - Manual Svc Order vs. Electronic-1st	Incremental Charge - Manual Svc Order vs. Electronic-Add'l	Incremental Charge - Manual Svc Order vs. Electronic-Disc 1st	Incremental Charge - Manual Svc Order vs. Electronic-Disc Add'l
							Rec	Nonrecurring		Nonrecurring Disconnect		OSS Rates ($)					
								First	Add'l	First	Add'l	SOMEC	SOMAN	SOMAN	SOMAN	SOMAN	SOMAN
8XX ACCESS TEN DIGIT SCREENING																	
		8XX Access Ten Digit Screening, Per Call			OHD		0.0006673										
		8XX Access Ten Digit Screening, Reservation Charge Per 8XX Number Reserved			OHD	N8R1X		2.59	0.44								
		8XX Access Ten Digit Screening, Per 8XX No. Established W/O POTS Translations			OHD			5.95	0.81	4.58	0.54						
		8XX Access Ten Digit Screening, Per 8XX No. Established With POTS Translations			OHD	N8FTX		5.95	0.81	4.58	0.54						
		8XX Access Ten Digit Screening, Customized Area of Service Per 8XX Number			OHD	N8FCX		2.59	1.30								
		8XX Access Ten Digit Screening, Multiple InterLATA CXR Routing Per CXR Requested Per 8XX No.			OHD	N8FMX		3.03	1.74								
		8XX Access Ten Digit Screening, Change Charge Per Request			OHD	N8FAX		3.03	0.44								
		8XX Access Ten Digit Screening, Call Handling and Destination Features			OHD	N8FDX		2.59	2.59								
		8XX Access Ten Digit Screening, w/ 8XX No. Delivery			OHD		0.0006673										
		8XX Access Ten Digit Screening, w/ POTS No. Delivery			OHD		0.0006673										
LINE INFORMATION DATA BASE ACCESS (LIDB)																	
		LIDB Common Transport Per Query			OQT		0.0000246										
		LIDB Validation Per Query			OQU		0.0138158										
		LIDB Originating Point Code Establishment or Change			OQT, OQU	NRBPX		34.40		42.18							
SIGNALING (CCS7)																	
		CCS7 Signaling Connection, Per 56 Kbps Facility			UDB	TPP++	16.93	35.61	35.61	16.48	16.48						
		CCS7 Signaling Termination, Per STP Port			UDB	PT8SX	163.49										
		CCS7 Signaling Usage, Per TCAP Message			UDB		0.0000692										
		CCS7 Signaling Connection, Per link (A link)			UDB	TPP++	16.93	35.61	35.61	16.48	16.48						
		CCS7 Signaling Connection, Per link (B link) (also known as D link)			UDB	TPP++	16.93	35.61	35.61	16.48	16.48						
		CCS7 Signaling Usage, Per ISUP Message			UDB		0.0000173										
		CCS7 Signaling Usage Surrogate, per link per LATA			UDB	STU56	791.37										
		CCS7 Signaling Point Code, per Originating Point Code Establishment or Change, per STP affected			UDB	CCAPO		29.08	29.08	35.65	35.65						
		CCS7 Signaling Point Code, per Destination Point Code Establishment or Change, Per Stp Affected			UDB	CCAPD		29.08	29.08	35.65	35.65						
E911 SERVICE																	
		Local Channel - Dedicated - 2-wr Voice Grade					15.33	193.53	33.24	36.72	3.21						
		Interoffice Transport - Dedicated - 2-wr Voice Grade Per Mile					0.0167										
		Interoffice Transport - Dedicated - 2-wr Voice Grade Per Facility Termination					24.30	40.63	27.47	16.77	6.91						
		Local Channel - Dedicated - DS1 - Zone 1					42.62	177.87	154.06	22.24	15.30						
		Local Channel - Dedicated - DS1 - Zone 2					70.32	177.87	154.06	22.24	15.30						
		Local Channel - Dedicated - DS1 - Zone 3					190.68	177.87	154.06	22.24	15.30						
		Interoffice Transport - Dedicated - DS1 Per Mile					0.3415										
		Interoffice Transport - Dedicated - DS1 Per Facility Termination					77.14	89.47	81.99	16.39	14.48						
CALLING NAME (CNAM) SERVICE																	
		CNAM For DB Owners - Service Establishment			OQV			23.00	23.00	21.15	21.15						
		CNAM For Non DB Owners - Service Establishment			OQV			23.00	23.00	21.15	21.15						
		CNAM For DB Owners - Service Provisioning With Point Code Establishment			OQV			993.09	734.47	269.53	198.18						
		CNAM For Non DB Owners - Service Provisioning With Point Code Establishment			OQV			343.09	245.69	275.87	198.18						
		CNAM for DB Owners, Per Query			OQV		0.0010433										
		CNAM for Non DB Owners, Per Query			OQV		0.0010433										
SELECTIVE ROUTING																	
		Selective Routing Per Unique Line Class Code Per Request Per Switch						84.89	84.89	14.14	14.14						
VIRTUAL COLLOCATION																	

UNBUNDLED NETWORK ELEMENTS - South Carolina														Attachment: 2		Exhibit: A	
CATEGORY		RATE ELEMENTS	Interim	Zone	BCS	USOC	RATES ($)					Svc Order Submitted Elec per LSR	Svc Order Submitted Manually per LSR	Incremental Charge - Manual Svc Order vs. Electronic-1st	Incremental Charge - Manual Svc Order vs. Electronic-Add'l	Incremental Charge - Manual Svc Order vs. Electronic-Disc 1st	Incremental Charge - Manual Svc Order vs. Electronic-Disc Add'l
							Rec	Nonrecurring		Nonrecurring Disconnect		OSS Rates ($)					
								First	Add'l	First	Add'l	SOMEC	SOMAN	SOMAN	SOMAN	SOMAN	SOMAN
		Virtual Collocation-2 Wire Cross Connects (Loop) for Line Splitting			UEPSR UEPSB	VE1LS	0.0317	12.32	11.83	6.04	5.45						
PHYSICAL COLLOCATION																	
		Physical Collocation-2 Wire Cross Connects (Loop) for Line Splitting			UEPSR UEPSB	PE1LS	0.0341	12.32	11.83	6.04	5.45						
AIN SELECTIVE CARRIER ROUTING																	
		Regional Service Establishment			SRC	SRCEC		101,324.34	101,324.34	8,609.85	8,609.85						
		End Office Establishment			SRC	SRCEO		175.66	175.66	1.70	1.70						
		Query NRC, per query			SRC		0.0035036										
AIN - BELLSOUTH AIN SMS ACCESS SERVICE																	
		AIN SMS Access Service - Service Establishment, Per State, Initial Setup			A1N	CAMSE		39.53	39.53	40.78	40.78						
		AIN SMS Access Service - Port Connection - Dial/Shared Access			A1N	CAMDP		7.85	7.85	9.11	9.11						
		AIN SMS Access Service - Port Connection - ISDN Access			A1N	CAM1P		7.85	7.85	9.11	9.11						
		AIN SMS Access Service - User Identification Codes - Per User ID Code			A1N	CAMAU		35.08	35.08	27.12	27.12						
		AIN SMS Access Service - Security Card, Per User ID Code, Initial or Replacement			A1N	CAMRC		41.98	41.98	11.74	11.74						
		AIN SMS Access Service - Storage, Per Unit (100 Kilobytes)					0.0027										
		AIN SMS Access Service - Session, Per Minute					0.7121										
		AIN SMS Access Service - Company Performed Session, Per Minute					0.8364										
AIN - BELLSOUTH AIN TOOLKIT SERVICE																	
		AIN Toolkit Service - Service Establishment Charge, Per State, Initial Setup			CAM	BAPSC		39.53	39.53	40.78	40.78						
		AIN Toolkit Service - Training Session, Per Customer				BAPVX		4,211.54	4,211.54	0.00	0.00						
		AIN Toolkit Service - Trigger Access Charge, Per Trigger, Per DN, Term. Attempt				BAPTT		7.85	7.85	9.11	9.11						
		AIN Toolkit Service - Trigger Access Charge, Per Trigger, Per DN, Off-Hook Delay				BAPTD		7.85	7.85	9.11	9.11						
		AIN Toolkit Service - Trigger Access Charge, Per Trigger, Per DN, Off-Hook Immediate				BAPTM		7.85	7.85	9.11	9.11						
		AIN Toolkit Service - Trigger Access Charge, Per Trigger, Per DN, 10-Digit PODP				BAPTO		34.54	34.54	14.39	14.39						
		AIN Toolkit Service - Trigger Access Charge, Per Trigger, Per DN, CDP				BAPTC		34.54	34.54	14.39	14.39						
		AIN Toolkit Service - Trigger Access Charge, Per Trigger, Per DN, Feature Code				BAPTF		34.54	34.54	14.39	14.39						
		AIN Toolkit Service - Query Charge, Per Query					0.0558238										
		AIN Toolkit Service - Type 1 Node Charge, Per AIN Toolkit Subscription, Per Node, Per Query					0.0069214										
		AIN Toolkit Service - SCP Storage Charge, Per SMS Access Account, Per 100 Kilobytes					0.07										
		AIN Toolkit Service - Monthly report - Per AIN Toolkit Service Subscription			CAM	BAPMS	11.87	7.85	7.85	5.52	5.52						
		AIN Toolkit Service - Special Study - Per AIN Toolkit Service Subscription			CAM	BAPLS	3.51	8.68	8.68								
		AIN Toolkit Service - Call Event Report - Per AIN Toolkit Service Subscription			CAM	BAPDS	8.48	7.85	7.85	5.52	5.52						
		AIN Toolkit Service - Call Event Special Study - Per AIN Toolkit Service Subscription			CAM	BAPES	0.12	8.68	8.68								
ENHANCED EXTENDED LINK (EELs)																	
	NOTE: The monthly recurring and non-recurring charges below will apply and the Switch-As-Is Charge will not apply for UNE combinations provisioned as ' Ordinarily Combined' Network Elements.																
	NOTE: The monthly recurring and the Switch-As-Is Charge and not the non-recurring charges below will apply for UNE combinations provisioned as ' Currently Combined' Network Elements.																
	EXTENTED 2-WIRE VOICE GRADE EXTENDED LOOP WITH DEDICATED DS1 INTEROFFICE TRANSPORT																
		First 2-Wire VG Loop (SL2) in Combination - Zone 1		1	UNCVX	UEAL2	16.68	105.98	68.43	53.05	10.61						
		First 2-Wire VG Loop (SL2) in Combination - Zone 2		2	UNCVX	UEAL2	23.13	105.98	68.43	53.05	10.61						
		First 2-Wire VG Loop (SL2) in Combination - Zone 3		3	UNCVX	UEAL2	28.46	105.98	68.43	53.05	10.61						

UNBUNDLED NETWORK ELEMENTS - South Carolina														Attachment: 2		Exhibit: A	
CATEGORY		RATE ELEMENTS	Interim	Zone	BCS	USOC	RATES ($)					Svc Order Submitted Elec per LSR	Svc Order Submitted Manually per LSR	Incremental Charge - Manual Svc Order vs. Electronic-1st	Incremental Charge - Manual Svc Order vs. Electronic-Add'l	Incremental Charge - Manual Svc Order vs. Electronic-Disc 1st	Incremental Charge - Manual Svc Order vs. Electronic-Disc Add'l
							Rec	Nonrecurring		Nonrecurring Disconnect		OSS Rates ($)					
								First	Add'l	First	Add'l	SOMEC	SOMAN	SOMAN	SOMAN	SOMAN	SOMAN
		Interoffice Transport - Dedicated - DS1 combination - Per Mile per month			UNC1X	1L5XX	0.27										
		Interoffice Transport - Dedicated - DS1 combination - Facility Termination per month			UNC1X	U1TF1	61.71	89.47	81.99	16.39	14.48						
		1/0 Channelization System in combination Per Month			UNC1X	MQ1	107.57	91.24	62.71	10.56	9.81						
		Voice Grade COCI - Per Month			UNCVX	1D1VG	0.56	6.59	4.73	0.00	0.00						
		Each Additional 2-Wire VG Loop (SL 2) in Combination - Zone 1		1	UNCVX	UEAL2	16.68	105.98	68.43	53.05	10.61						
		Each Additional 2-Wire VG Loop (SL 2) in Combination - Zone 2		2	UNCVX	UEAL2	23.13	105.98	68.43	53.05	10.61						
		Each Additional 2-Wire VG Loop (SL 2) in Combination - Zone 3		3	UNCVX	UEAL2	28.46	105.98	68.43	53.05	10.61						
		Voice Grade COCI - Per Month			UNCVX	1D1VG	0.56	6.59	4.73	0.00	0.00						
		Nonrecurring Currently Combined Network Elements Switch -As-Is Charge			UNC1X	UNCCC		5.61	5.61	7.00	7.00						
	EXTENDED 4-WIRE VOICE GRADE EXTENDED LOOP WITH DEDICATED DS1 INTEROFFICE TRANSPORT																
		First 4-Wire Analog Voice Grade Loop in Combination - Zone 1		1	UNCVX	UEAL4	32.59	132.38	94.83	59.35	14.61						
		First 4-Wire Analog Voice Grade Loop in Combination - Zone 2		2	UNCVX	UEAL4	43.89	132.38	94.83	59.35	14.61						
		First 4-Wire Analog Voice Grade Loop in Combination - Zone 3		3	UNCVX	UEAL4	43.38	132.38	94.83	59.35	14.61						
		Interoffice Transport - Dedicated - DS1 combination - Per Mile Per Month			UNC1X	1L5XX	0.27										
		Interoffice Transport - Dedicated - DS1 - Facility Termination Per Month			UNC1X	U1TF1	61.71	89.47	81.99	16.39	14.48						
		1/0 Channel System in combination Per Month			UNC1X	MQ1	107.57	91.24	62.71	10.56	9.81						
		Voice Grade COCI in combination - per month			UNCVX	1D1VG	0.56	6.59	4.73	0.00	0.00						
		Additional 4-Wire Analog Voice Grade Loop in same DS1 Interoffice Transport Combination - Zone 1		1	UNCVX	UEAL4	32.59	132.38	94.83	59.35	14.61						
		Additional 4-Wire Analog Voice Grade Loop in same DS1 Interoffice Transport Combination - Zone 2		2	UNCVX	UEAL4	43.89	132.38	94.83	59.35	14.61						
		Additional 4-Wire Analog Voice Grade Loop in same DS1 Interoffice Transport Combination - Zone 3		3	UNCVX	UEAL4	43.38	132.38	94.83	59.35	14.61						
		Additional Voice Grade COCI in combination - per month			UNCVX	1D1VG	0.56	6.59	4.73	0.00	0.00						
		Nonrecurring Currently Combined Network Elements Switch -As-Is Charge			UNC1X	UNCCC		5.61	5.61	7.00	7.00						
	EXTENDED 4-WIRE 56 KBPS EXTENDED DIGITAL LOOP WITH DEDICATED DS1 INTEROFFICE TRANSPORT																
		First 4-Wire 56Kbps Digital Grade Loop in Combination - Zone 1		1	UNCDX	UDL56	29.93	126.66	89.12	59.35	14.61						
		First 4-Wire 56Kbps Digital Grade Loop in Combination - Zone 2		2	UNCDX	UDL56	33.99	126.66	89.12	59.35	14.61						
		First 4-Wire 56Kbps Digital Grade Loop in Combination - Zone 3		3	UNCDX	UDL56	34.74	126.66	89.12	59.35	14.61						
		Interoffice Transport - Dedicated - DS1 combination - Per Mile Per Month			UNC1X	1L5XX	0.27										
		Interoffice Transport - Dedicated - DS1 - combination Facility Termination Per Month			UNC1X	U1TF1	61.71	89.47	81.99	16.39	14.48						
		1/0 Channel System in combination Per Month			UNC1X	MQ1	107.57	91.24	62.71	10.56	9.81						
		OCU-DP COCI (data) per month (2.4-64kbs)			UNCDX	1D1DD	1.19	6.59	4.73	0.00	0.00						
		Additional 4-Wire 56Kbps Digital Grade Loop in same DS1 Interoffice Transport Combination - Zone 1		1	UNCDX	UDL56	29.93	126.66	89.12	59.35	14.61						
		Additional 4-Wire 56Kbps Digital Grade Loop in same DS1 Interoffice Transport Combination - Zone 2		2	UNCDX	UDL56	33.99	126.66	89.12	59.35	14.61						
		Additional 4-Wire 56Kbps Digital Grade Loop in same DS1 Interoffice Transport Combination - Zone 3		3	UNCDX	UDL56	34.74	126.66	89.12	59.35	14.61						
		Additional OCU-DP COCI (data) - in combination per month (2.4-64kbs)			UNCDX	1D1DD	1.19	6.59	4.73	0.00	0.00						

UNBUNDLED NETWORK ELEMENTS - South Carolina														Attachment: 2		Exhibit: A	
CATEGORY		RATE ELEMENTS	Interim	Zone	BCS	USOC	RATES ($)					Svc Order Submitted Elec per LSR	Svc Order Submitted Manually per LSR	Incremental Charge - Manual Svc Order vs. Electronic-1st	Incremental Charge - Manual Svc Order vs. Electronic-Add'l	Incremental Charge - Manual Svc Order vs. Electronic-Disc 1st	Incremental Charge - Manual Svc Order vs. Electronic-Disc Add'l
							Rec	Nonrecurring		Nonrecurring Disconnect		OSS Rates ($)					
								First	Add'l	First	Add'l	SOMEC	SOMAN	SOMAN	SOMAN	SOMAN	SOMAN
		Nonrecurring Currently Combined Network Elements Switch -As-Is Charge			UNC1X	UNCCC		5.61	5.61	7.00	7.00						
	EXTENDED 4-WIRE 64 KBPS EXTENDED DIGITAL LOOP WITH DEDICATED DS1 INTEROFFICE TRANSPORT																
		First 4-Wire 64Kbps Digital Grade Loop in Combination - Zone 1		1	UNCDX	UDL64	29.93	126.66	89.12	59.35	14.61						
		First 4-Wire 64Kbps Digital Grade Loop in Combination - Zone 2		2	UNCDX	UDL64	33.99	126.66	89.12	59.35	14.61						
		First 4-Wire 64Kbps Digital Grade Loop in Combination - Zone 3		3	UNCDX	UDL64	34.74	126.66	89.12	59.35	14.61						
		Interoffice Transport - Dedicated - DS1 combination - Per Mile Per Month			UNC1X	1L5XX	0.27										
		interoffice Transport - Dedicated - DS1 combination - Facility Termination Per Month			UNC1X	U1TF1	61.71	89.47	81.99	16.39	14.48						
		1/0 Channel System in combination Per Month			UNC1X	MQ1	107.57	91.24	62.71	10.56	9.81						
		OCU-DP COCI (data) - in combination - per month (2.4-64kbs)			UNCDX	1D1DD	1.19	6.59	4.73	0.00	0.00						
		Additional 4-Wire 64Kbps Digital Grade Loop in same DS1 Interoffice Transport Combination - Zone 1		1	UNCDX	UDL64	29.93	126.66	89.12	59.35	14.61						
		Additional 4-Wire 64Kbps Digital Grade Loop in same DS1 Interoffice Transport Combination - Zone 2		2	UNCDX	UDL64	33.99	126.66	89.12	59.35	14.61						
		Additional 4-Wire 64Kbps Digital Grade Loop in same DS1 Interoffice Transport Combination - Zone 3		3	UNCDX	UDL64	34.74	126.66	89.12	59.35	14.61						
		Additional OCU-DP COCI (data) - in combination - per month (2.4-64kbs)			UNCDX	1D1DD	1.19	6.59	4.73	0.00	0.00						
		Nonrecurring Currently Combined Network Elements Switch -As-Is Charge			UNC1X	UNCCC		5.61	5.61	7.00	7.00						
	EXTENDED 4-WIRE DS1 DIGITAL EXTENDED LOOP WITH DEDICATED DS1 INTEROFFICE TRANSPORT																
		4-Wire DS1 Digital Loop in Combination - Zone 1		1	UNC1X	USLXX	90.87	253.03	157.89	44.80	11.73						
		4-Wire DS1 Digital Loop in Combination - Zone 2		2	UNC1X	USLXX	155.43	253.03	157.89	44.80	11.73						
		4-Wire DS1 Digital Loop in Combination - Zone 3		3	UNC1X	USLXX	261.89	253.03	157.89	44.80	11.73						
		Interoffice Transport - Dedicated - DS1 combination - Per Mile Per Month			UNC1X	1L5XX	0.27										
		Interoffice Transport - Dedicated - DS1 combination - Facility Termination Per Month			UNC1X	U1TF1	61.71	89.47	81.99	16.39	14.48						
		Nonrecurring Currently Combined Network Elements Switch -As-Is Charge			UNC1X	UNCCC		5.61	5.61	7.00	7.00						
	EXTENDED 4-WIRE DS1 DIGITAL EXTENDED LOOP WITH DEDICATED DS3 INTEROFFICE TRANSPORT																
		First DS1Loop in Combination - Zone 1		1	UNC1X	USLXX	90.87	253.03	157.89	44.80	11.73						
		First DS1Loop in Combination - Zone 2		2	UNC1X	USLXX	155.43	253.03	157.89	44.80	11.73						
		First DS1Loop in Combination - Zone 3		3	UNC1X	USLXX	261.89	253.03	157.89	44.80	11.73						
		Interoffice Transport - Dedicated - DS3 combination - Per Mile Per Month			UNC3X	1L5XX	6.42										
		Interoffice Transport - Dedicated - DS3 - Facility Termination per month			UNC3X	U1TF3	704.52	279.37	163.12	60.33	58.59						
		3/1Channel System in combination per month			UNC3X	MQ3	144.02	178.54	94.18	33.33	31.90						
		DS1 COCI in combination per month			UNC1X	UC1D1	8.64	6.59	4.73	0.00	0.00						
		Additional DS1Loop in DS3 Interoffice Transport Combination - Zone 1		1	UNC1X	USLXX	90.87	253.03	157.89	44.80	11.73						
		Additional DS1Loop in DS3 Interoffice Transport Combination - Zone 2		2	UNC1X	USLXX	155.43	253.03	157.89	44.80	11.73						
		Additional DS1Loop in DS3 Interoffice Transport Combination - Zone 3		3	UNC1X	USLXX	261.89	253.03	157.89	44.80	11.73						
		Additoinal DS1 COCI in combination per month			UNC1X	UC1D1	8.64	6.59	4.73	0.00	0.00						
		Nonrecurring Currently Combined Network Elements Switch -As-Is Charge			UNC3X	UNCCC		5.61	5.61	7.00	7.00						
	EXTENDED 4-WIRE VOICE GRADE EXTENDED LOOP/ 4 WIRE VOICE GRADE INTEROFFICE TRANSPORT																
		2-WireVG Loop in combination - Zone 1		1	UNCVX	UEAL2	16.68	105.98	68.43	53.05	10.61						
		2-WireVG Loop in combination - Zone 2		2	UNCVX	UEAL2	23.13	105.98	68.43	53.05	10.61						
		2-WireVG Loop in combination - Zone 3		3	UNCVX	UEAL2	28.46	105.98	68.43	53.05	10.61						

UNBUNDLED NETWORK ELEMENTS - South Carolina														Attachment: 2		Exhibit: A	
CATEGORY		RATE ELEMENTS	Interim	Zone	BCS	USOC	RATES ($)					Svc Order Submitted Elec per LSR	Svc Order Submitted Manually per LSR	Incremental Charge - Manual Svc Order vs. Electronic-1st	Incremental Charge - Manual Svc Order vs. Electronic-Add'l	Incremental Charge - Manual Svc Order vs. Electronic-Disc 1st	Incremental Charge - Manual Svc Order vs. Electronic-Disc Add'l
							Rec	Nonrecurring		Nonrecurring Disconnect		OSS Rates ($)					
								First	Add'l	First	Add'l	SOMEC	SOMAN	SOMAN	SOMAN	SOMAN	SOMAN
		Interoffice Transport - 2-wire VG - Dedicated- Per Mile Per Month			UNCVX	1L5XX	0.0134										
		Interoffice Transport - 2-wire VG - Dedicated - Facility Termination per month			UNCVX	U1TV2	19.44	40.63	27.47	16.77	6.91						
		Nonrecurring Currently Combined Network Elements Switch -As-Is Charge			UNCVX	UNCCC		5.61	5.61	7.00	7.00						
	EXTENDED 4-WIRE VOICE GRADE EXTENDED LOOP/ 4 WIRE VOICE GRADE INTEROFFICE TRANSPORT																
		4-WireVG Loop in combination - Zone 1		1	UNCVX	UEAL4	32.59	132.38	94.83	59.35	14.61						
		4-WireVG Loop in combination - Zone 2		2	UNCVX	UEAL4	43.89	132.38	94.83	59.35	14.61						
		4-WireVG Loop in combination - Zone 3		3	UNCVX	UEAL4	43.38	132.38	94.83	59.35	14.61						
		Interoffice Transport - 4-wire VG - Dedicated - Per Mile Per Month			UNCVX	1L5XX	0.0134										
		Interoffice Transport - 4-wire VG - Dedicated - Facility Termination per month			UNCVX	U1TV4	17.03	40.63	27.47	16.77	6.91						
		Nonrecurring Currently Combined Network Elements Switch -As-Is Charge			UNCVX	UNCCC		5.61	5.61	7.00	7.00						
	EXTENDED DS3 DIGITAL EXTENDED LOOP WITH DEDICATED DS3 INTEROFFICE TRANSPORT																
		DS3 Local Loop in combination - per mile per month			UNC3X	1L5ND	12.26										
		DS3 Local Loop in combination - Facility Termination per month			UNC3X	UE3PX	306.36	452.52	264.53	119.75	83.77						
		Interoffice Transport - Dedicated - DS3 - Per Mile per month			UNC3X	1L5XX	6.42										
		Interoffice Transport - Dedicated - DS3 combination - Facility Termination per month			UNC3X	U1TF3	704.52	279.37	163.12	60.33	58.59						
		Nonrecurring Currently Combined Network Elements Switch -As-Is Charge			UNC3X	UNCCC		5.61	5.61	7.00	7.00						
	EXTENDED STS-1 DIGITAL EXTENDED LOOP WITH DEDICATED STS-1 INTEROFFICE TRANSPORT																
		STS-1 Local Lolp in combination - per mile per month			UNCSX	1L5ND	12.26										
		STS-1 Local Loop in combination - Facility Termination per month			UNCSX	UDLS1	313.49	452.52	264.53	119.75	83.77						
		Interoffice Transport - Dedicated - STS-1 combination - per mile per month			UNCSX	1L5XX	6.42										
		Interoffice Transport - Dedicated - STS-1 combination - Facility Termination per month			UNCSX	U1TFS	704.44	279.37	163.12	60.33	58.59						
		Nonrecurring Currently Combined Network Elements Switch -As-Is Charge			UNCSX	UNCCC		5.61	5.61	7.00	7.00						
	EXTENDED 2-WIRE ISDN EXTENDED LOOP WITH DS1 INTEROFFICE TRANSPORT																
		First 2-Wire ISDN Loop in Combination - Zone 1		1	UNCNX	U1L2X	25.21	117.58	80.03	53.05	10.61						
		First 2-Wire ISDN Loop in Combination - Zone 2		2	UNCNX	U1L2X	32.76	117.58	80.03	53.05	10.61						
		First 2-Wire ISDN Loop in Combination - Zone 3		3	UNCNX	U1L2X	37.70	117.58	80.03	53.05	10.61						
		Interoffice Transport - Dedicated - DS1 combination - per mile per month			UNC1X	1L5XX	0.27										
		Interoffice Transport - Dedicated - DS1 combination - Facility Termination per month			UNC1X	U1TF1	61.71	89.47	81.99	16.39	14.48						
		1/0 Channel System in combination - per month			UNC1X	MQ1	107.57	91.24	62.71	10.56	9.81						
		2-wire ISDN COCI (BRITE) - in combination - per month			UNCNX	UC1CA	2.56	6.59	4.73	0.00	0.00						
		Additional 2-wire ISDN Loop in same DS1Interoffice Transport Combination - Zone 1		1	UNCNX	U1L2X	25.21	117.58	80.03	53.05	10.61						
		Additional 2-wire ISDN Loop in same DS1Interoffice Transport Combination - Zone 2		2	UNCNX	U1L2X	32.76	117.58	80.03	53.05	10.61						
		Additional 2-wire ISDN Loop in same DS1Interoffice Transport Combination - Zone 3		3	UNCNX	U1L2X	37.70	117.58	80.03	53.05	10.61						
		Additional 2-wire ISDN COCI (BRITE) - in combination- per month			UNCNX	UC1CA	2.56	6.59	4.73	0.00	0.00						
		Nonrecurring Currently Combined Network Elements Switch -As-Is Charge			UNC1X	UNCCC		5.61	5.61	7.00	7.00						
	EXTENDED 4-WIRE DS1 DIGITAL EXTENDED LOOP WITH DEDICATED STS-1 INTEROFFICE TRANSPORT																
		First DS1 Loop Combination - Zone 1		1	UNC1X	USLXX	90.87	253.03	157.89	44.80	11.73						
		First DS1 Loop Combination - Zone 2		2	UNC1X	USLXX	155.43	253.03	157.89	44.80	11.73						
		First DS1 Loop Combination - Zone 3		3	UNC1X	USLXX	261.89	253.03	157.89	44.80	11.73						

UNBUNDLED NETWORK ELEMENTS - South Carolina														Attachment: 2		Exhibit: A	
CATEGORY		RATE ELEMENTS	Interim	Zone	BCS	USOC	RATES ($)					Svc Order Submitted Elec per LSR	Svc Order Submitted Manually per LSR	Incremental Charge - Manual Svc Order vs. Electronic-1st	Incremental Charge - Manual Svc Order vs. Electronic-Add'l	Incremental Charge - Manual Svc Order vs. Electronic-Disc 1st	Incremental Charge - Manual Svc Order vs. Electronic-Disc Add'l
							Rec	Nonrecurring		Nonrecurring Disconnect		OSS Rates ($)					
								First	Add'l	First	Add'l	SOMEC	SOMAN	SOMAN	SOMAN	SOMAN	SOMAN
		Interoffice Transport - Dedicated - STS-1 combination - Per Mile Per Month			UNCSX	1L5XX	6.42										
		Interoffice Transport - Dedicated - STS-1 combination - Facility Termination per month			UNCSX	U1TFS	704.44	279.37	163.12	60.33	58.59						
		3/1 Channel System in combination per month			UNCSX	MQ3	144.02	178.54	94.18	33.33	31.90						
		DS1 COCI in combination per month			UNC1X	UC1D1	8.64	6.59	4.73	0.00	0.00						
		Additional DS1Loop in the same STS-1 Interoffice Transport Combination - Zone 1		1	UNC1X	USLXX	90.87	253.03	157.89	44.80	11.73						
		Additional DS1Loop in the same STS-1 Interoffice Transport Combination - Zone 2		2	UNC1X	USLXX	155.43	253.03	157.89	44.80	11.73						
		Additional DS1Loop in the same STS-1 Interoffice Transport Combination - Zone 3		3	UNC1X	USLXX	261.89	253.03	157.89	44.80	11.73						
		DS1 COCI in combination per month			UNC1X	UC1D1	8.64	6.59	4.73	0.00	0.00						
		Nonrecurring Currently Combined Network Elements Switch -As-Is Charge			UNCSX	UNCCC		5.61	5.61	7.00	7.00						
	EXTENDED 4-WIRE 56 KBPS DIGITAL EXTENDED LOOP WITH 56 KBPS INTEROFFICE TRANSPORT																
		4-wire 56 kbps Local Loop in combination - Zone 1		1	UNCDX	UDL56	29.93	126.66	89.12	59.35	14.61						
		4-wire 56 kbps Local Loop in combination - Zone 2		2	UNCDX	UDL56	33.99	126.66	89.12	59.35	14.61						
		4-wire 56 kbps Local Loop in combination - Zone 3		3	UNCDX	UDL56	34.74	126.66	89.12	59.35	14.61						
		Interoffice Transport - Dedicated - 4-wire 56 kbps combination - Per Mile per month			UNCDX	1L5XX	0.0134										
		Interoffice Transport - Dedicated - 4-wire 56 kbps combination - Facility Termination per month			UNCDX	U1TD5	13.41	40.63	27.47	16.77	6.91						
		Nonrecurring Currently Combined Network Elements Switch -As-Is Charge			UNCDX	UNCCC		5.61	5.61	7.00	7.00						
	EXTENDED 4-WIRE 64 KBPS DIGITAL EXTENDED LOOP WITH 64 KBPS INTEROFFICE TRANSPORT																
		4-wire 64 kbps Lcoal Loop in Combination - Zone 1		1	UNCDX	UDL64	29.93	126.66	89.12	59.35	14.61						
		4-wire 64 kbps Lcoal Loop in Combination - Zone 2		2	UNCDX	UDL64	33.99	126.66	89.12	59.35	14.61						
		4-wire 64 kbps Lcoal Loop in Combination - Zone 3		3	UNCDX	UDL64	34.74	126.66	89.12	59.35	14.61						
		Interoffice Transport - Dedicated - 4-wire 64 kbps combination - Per Mile per month			UNCDX	1L5XX	0.0134										
		Interoffice Transport - Dedicated - 4-wire 64 kbps combination - Facility Termination per month			UNCDX	U1TD6	13.41	40.63	27.47	16.77	6.91						
		Nonrecurring Currently Combined Network Elements Switch -As-Is Charge			UNCDX	UNCCC		5.61	5.61	7.00	7.00						
	EXTENDED 2-WIRE VOICE GRADE LOOP WITH DS1 INTEROFFICE TRANSPORT w/ 3/1 MUX																
		First 2-wire VG Loop (SL2) in Combination - Zone 1		1	UNCVX	UEAL2	16.68	105.98	68.43	53.05	10.61						
		First 2-wire VG Loop (SL2) in Combination - Zone 2		2	UNCVX	UEAL2	23.13	105.98	68.43	53.05	10.61						
		First 2-wire VG Loop (SL2) in Combination - Zone 3		3	UNCVX	UEAL2	28.46	105.98	68.43	53.05	10.61						
		First Interoffice Transport - Dedicated - DS1 combination - Per Mile			UNC1X	1L5XX	0.27										
		First Interoffice Transport - Dedicated - DS1 combination - Facility Termination per month			UNC1X	U1TF1	61.71	89.47	81.99	16.39	14.48						
		Per each DS1 Channelization System Per Month			UNC1X	MQ1	107.57	91.24	62.71	10.56	9.81						
		Per each Voice Grade COCI - Per Month per month			UNCVX	1D1VG	0.56	6.59	4.73	0.00	0.00						
		3/1 Channel System in combination per month			UNC3X	MQ3	144.02	178.54	94.18	33.33	31.90						
		Per each DS1 COCI in combination per month			UNC1X	UC1D1	8.64	6.59	4.73	0.00	0.00						
		Each Additional 2-Wire VG Loop(SL 2) in the same DS1 Interoffice Transport Combination - Zone 1		1	UNCVX	UEAL2	16.68	105.98	68.43	53.05	10.61						
		Each Additional 2-Wire VG Loop(SL2) in the same DS1 Interoffice Transport Combination - Zone 2		2	UNCVX	UEAL2	23.13	105.98	68.43	53.05	10.61						
		Each Additional 2-Wire VG Loop(SL2) in the same DS1 Interoffice Transport Combination - Zone 3		3	UNCVX	UEAL2	28.46	105.98	68.43	53.05	10.61						
		Each Additional Voice Grade COCI in combination - per month			UNCVX	1D1VG	0.56	6.59	4.73	0.00	0.00						
		Each Additional DS1 Interoffice Channel per mile in same 3/1 Channel System per month			UNC1X	1L5XX	0.27										
		Each Additional DS1 Interoffice Channel Facility Termination in same 3/1 Channel System per month			UNC1X	U1TF1	61.71	89.47	81.99	16.39	14.48						
		Each Additional DS1 COCI combination per month			UNC1X	UC1D1	8.64	6.59	4.73	0.00	0.00						

UNBUNDLED NETWORK ELEMENTS - South Carolina														Attachment: 2		Exhibit: A	
CATEGORY		RATE ELEMENTS	Interim	Zone	BCS	USOC	RATES ($)					Svc Order Submitted Elec per LSR	Svc Order Submitted Manually per LSR	Incremental Charge - Manual Svc Order vs. Electronic-1st	Incremental Charge - Manual Svc Order vs. Electronic-Add'l	Incremental Charge - Manual Svc Order vs. Electronic-Disc 1st	Incremental Charge - Manual Svc Order vs. Electronic-Disc Add'l
							Rec	Nonrecurring		Nonrecurring Disconnect		OSS Rates ($)					
								First	Add'l	First	Add'l	SOMEC	SOMAN	SOMAN	SOMAN	SOMAN	SOMAN
		Nonrecurring Currently Combined Network Elements Switch -As-Is Charge			UNC1X	UNCCC		5.61	5.61	7.00	7.00						
	EXTENDED 4-WIRE 56 KBPS DIGITAL LOOP WITH DEDICATED DS1 INTEROFFICE TRANSPORT w/ 3/1 MUX																
		First 4-Wire Analog Voice Grade Local Loop in Combination - Zone 1		1	UNCVX	UEAL4	32.59	132.38	94.83	59.35	14.61						
		First 4-Wire Analog Voice Grade Local Loop in Combination - Zone 2		2	UNCVX	UEAL4	43.89	132.38	94.83	59.35	14.61						
		First 4-Wire Analog Voice Grade Local Loop in Combination - Zone 3		3	UNCVX	UEAL4	43.38	132.38	94.83	59.35	14.61						
		First Interoffice Transport - Dedicated - DS1 combination - Per Mile Per Month			UNC1X	1L5XX	0.27										
		First Interoffice Transport - Dedicated - DS1 - Facility Termination Per Month			UNC1X	U1TF1	61.71	89.47	81.99	16.39	14.48						
		Per each 1/0 Channel System in combination Per Month			UNC1X	MQ1	107.57	91.24	62.71	10.56	9.81						
		Per each Voice Grade COCI in combination - per month			UNCVX	1D1VG	0.56	6.59	4.73	0.00	0.00						
		3/1 Channel System in combination per month			UNC3X	MQ3	144.02	178.54	94.18	33.33	31.90						
		Per each DS1 COCI in combination per month			UNC1X	UC1D1	8.64	6.59	4.73	0.00	0.00						
		Additional 4-Wire Analog Voice Grade Loop in same DS1 Interoffice Transport Combination - Zone 1		1	UNCVX	UEAL4	32.59	132.38	94.83	59.35	14.61						
		Additional 4-Wire Analog Voice Grade Loop in same DS1 Interoffice Transport Combination - Zone 2		2	UNCVX	UEAL4	43.89	132.38	94.83	59.35	14.61						
		Additional 4-Wire Analog Voice Grade Loop in same DS1 Interoffice Transport Combination - Zone 3		3	UNCVX	UEAL4	43.38	132.38	94.83	59.35	14.61						
		Each Additional DS1 Interoffice Channel per mile in same 3/1 Channel System per month			UNC1X	1L5XX	0.27										
		Each Additional DS1 Interoffice Channel Facility Termination in same 3/1 Channel System per month			UNC1X	U1TF1	61.71	89.47	81.99	16.39	14.48						
		Additional Voice Grade COCI - in combination - per month			UNCVX	1D1VG	0.56	6.59	4.73	0.00	0.00						
		Nonrecurring Currently Combined Network Elements Switch -As-Is Charge			UNC1X	UNCCC		5.61	5.61	7.00	7.00						
	EXTENDED 4-WIRE 56 KBPS DIGITAL LOOP WITH DEDICATED DS1 INTEROFFICE TRANSPORT w/ 3/1 MUX																
		First 4-Wire 56Kbps Digital Grade Local Loop in Combination - Zone 1		1	UNCDX	UDL56	29.93	126.66	89.12	59.35	14.61						
		First 4-Wire 56Kbps Digital Grade Local Loop in Combination - Zone 2		2	UNCDX	UDL56	33.99	126.66	89.12	59.35	14.61						
		First 4-Wire 56Kbps Digital Grade Local Loop in Combination - Zone 3		3	UNCDX	UDL56	34.74	126.66	89.12	59.35	14.61						
		First Interoffice Transport - Dedicated - DS1 combination - Per Mile Per Month			UNC1X	1L5XX	0.27										
		First Interoffice Transport - Dedicated - DS1 - combination Facility Termination Per Month			UNC1X	U1TF1	61.71	89.47	81.99	16.39	14.48						
		Per each 1/0 Channel System in combination Per Month			UNC1X	MQ1	107.57	91.24	62.71	10.56	9.81						
		Per each OCU-DP COCI (data) COCI per month (2.4-64kbs)			UNCDX	1D1DD	1.19	6.59	4.73	0.00	0.00						
		3/1 Channel System in combination per month			UNC3X	MQ3	144.02	178.54	94.18	33.33	31.90						
		Per each DS1 COCI in combination per month			UNC1X	UC1D1	8.64	6.59	4.73	0.00	0.00						
		Additional 4-Wire 56Kbps Digital Grade Loop in same DS1 Interoffice Transport Combination - Zone 1		1	UNCDX	UDL56	29.93	126.66	89.12	59.35	14.61						
		Additional 4-Wire 56Kbps Digital Grade Loop in same DS1 Interoffice Transport Combination - Zone 2		2	UNCDX	UDL56	33.99	126.66	89.12	59.35	14.61						
		Additional 4-Wire 56Kbps Digital Grade Loop in same DS1 Interoffice Transport Combination - Zone 3		3	UNCDX	UDL56	34.74	126.66	89.12	59.35	14.61						
		OCU-DP COCI (data) COCI in combination per month (2.4-64kbs)			UNCDX	1D1DD	1.19	6.59	4.73	0.00	0.00						
		Each Additional DS1 Interoffice Channel per mile in same 3/1 Channel System per month			UNC1X	1L5XX	0.27										
		Each Additional DS1 Interoffice Channel Facility Termination in same 3/1 Channel System per month			UNC1X	U1TF1	61.71	89.47	81.99	16.39	14.48						
		Each Additional DS1 COCI in the same 3/1 channel system combination per month			UNC1X	UC1D1	8.64	6.59	4.73	0.00	0.00						

UNBUNDLED NETWORK ELEMENTS - South Carolina														Attachment: 2		Exhibit: A	
CATEGORY		RATE ELEMENTS	Interim	Zone	BCS	USOC	RATES ($)					Svc Order Submitted Elec per LSR	Svc Order Submitted Manually per LSR	Incremental Charge - Manual Svc Order vs. Electronic-1st	Incremental Charge - Manual Svc Order vs. Electronic-Add'l	Incremental Charge - Manual Svc Order vs. Electronic-Disc 1st	Incremental Charge - Manual Svc Order vs. Electronic-Disc Add'l
							Rec	Nonrecurring		Nonrecurring Disconnect		OSS Rates ($)					
								First	Add'l	First	Add'l	SOMEC	SOMAN	SOMAN	SOMAN	SOMAN	SOMAN
		Nonrecurring Currently Combined Network Elements Switch -As-Is Charge			UNC1X	UNCCC		5.61	5.61	7.00	7.00						
	EXTENDED 4-WIRE 64 KBPS DIGITAL LOOP WITH DEDICATED DS1 INTEROFFICE TRANSPORT w/ 3/1 MUX																
		First 4-Wire 64Kbps Digital Grade Loop in a DS1 Interoffice Transport Combination - Zone 1		1	UNCDX	UDL64	29.93	126.66	89.12	59.35	14.61						
		First 4-Wire 64Kbps Digital Grade Loop in a DS1 Interoffice Transport Combination - Zone 2		2	UNCDX	UDL64	33.99	126.66	89.12	59.35	14.61						
		First 4-Wire 64Kbps Digital Grade Loop in a DS1 Interoffice Transport Combination - Zone 3		3	UNCDX	UDL64	34.74	126.66	89.12	59.35	14.61						
		First Interoffice Transport - Dedicated - DS1 combination - Per Mile Per Month			UNC1X	1L5XX	0.27										
		First Interoffice Transport - Dedicated - DS1 combination - Facility Termination Per Month			UNC1X	U1TF1	61.71	89.47	81.99	16.39	14.48						
		Per each Channel System 1/0 in combination Per Month			UNC1X	MQ1	107.57	91.24	62.71	10.56	9.81						
		Per each OCU-DP COCI (data) in combination - per month (2.4-64kbs)			UNCDX	1D1DD	1.19	6.59	4.73	0.00	0.00						
		3/1 Channel System in combination per month			UNC3X	MQ3	144.02	178.54	94.18	33.33	31.90						
		Per each DS1 COCI in combination per month			UNC1X	UC1D1	8.64	6.59	4.73	0.00	0.00						
		Additional 4-Wire 64Kbps Digital Grade Loop in same DS1 Interoffice Transport Combination - Zone 1		1	UNCDX	UDL64	29.93	126.66	89.12	59.35	14.61						
		Additional 4-Wire 64Kbps Digital Grade Loop in same DS1 Interoffice Transport Combination - Zone 2		2	UNCDX	UDL64	33.99	126.66	89.12	59.35	14.61						
		Additional 4-Wire 64Kbps Digital Grade Loop in same DS1 Interoffice Transport Combination - Zone 3		3	UNCDX	UDL64	34.74	126.66	89.12	59.35	14.61						
		Additional OCU-DP COCI (data) - DS1 to DS0 Channel System combination - per month (2.4-64kbs)			UNCDX	1D1DD	1.19	6.59	4.73	0.00	0.00						
		Each Additional DS1 Interoffice Channel per mile in same 3/1 Channel System per month			UNC1X	1L5XX	0.27										
		Each Additional DS1 Interoffice Channel Facility Termination in same 3/1 Channel System per month			UNC1X	U1TF1	61.71	89.47	81.99	16.39	14.48						
		Each Additional DS1 COCI in the same 3/1 channel system combination per month			UNC1X	UC1D1	8.64	6.59	4.73	0.00	0.00						
		Nonrecurring Currently Combined Network Elements Switch -As-Is Charge			UNC1X	UNCCC		5.61	5.61	7.00	7.00						
	EXTENDED 2-WIRE ISDN LOOP WITH DS1 INTEROFFICE TRANSPORT w/ 3/1 MUX																
		First 2-Wire ISDN Loop in a DS1 Interoffice Combination Transport - Zone 1		1	UNCNX	U1L2X	25.21	117.58	80.03	53.05	10.61						
		First 2-Wire ISDN Loop in a DS1 Interoffice Combination Transport - Zone 2		2	UNCNX	U1L2X	32.76	117.58	80.03	53.05	10.61						
		First 2-Wire ISDN Loop in a DS1 Interoffice Combination Transport - Zone 3		3	UNCNX	U1L2X	37.70	117.58	80.03	53.05	10.61						
		First Interoffice Transport - Dedicated - DS1 combination - Per Mile per month			UNC1X	1L5XX	0.27										
		First Interoffice Transport - Dedicated - DS1 combination - Facility Termination per month			UNC1X	U1TF1	61.71	89.47	81.99	16.39	14.48						
		Per each Channel System 1/0 in combination - per month			UNC1X	MQ1	107.57	91.24	62.71	10.56	9.81						
		Per each 2-wire ISDN COCI (BRITE) in combination - per month			UNCNX	UC1CA	2.56	6.59	4.73	0.00	0.00						
		3/1 Channel System in combination per month			UNC3X	MQ3	144.02	178.54	94.18	33.33	31.90						
		Per each DS1 COCI in combination per month			UNC1X	UC1D1	8.64	6.59	4.73	0.00	0.00						
		Additional 2-wire ISDN Loop in same DS1Interoffice Transport Combination - Zone 1		1	UNCNX	U1L2X	25.21	117.58	80.03	53.05	10.61						
		Additional 2-wire ISDN Loop in same DS1Interoffice Transport Combination - Zone 2		2	UNCNX	U1L2X	32.76	117.58	80.03	53.05	10.61						
		Additional 2-wire ISDN Loop in same DS1Interoffice Transport Combination - Zone 3		3	UNCNX	U1L2X	37.70	117.58	80.03	53.05	10.61						
		Additional 2-wire ISDN COCI (BRITE) in same 1/0 channel system combination- per month			UNCNX	UC1CA	2.56	6.59	4.73	0.00	0.00						

UNBUNDLED NETWORK ELEMENTS - South Carolina														Attachment: 2		Exhibit: A	
CATEGORY		RATE ELEMENTS	Interim	Zone	BCS	USOC	RATES ($)					Svc Order Submitted Elec per LSR	Svc Order Submitted Manually per LSR	Incremental Charge - Manual Svc Order vs. Electronic-1st	Incremental Charge - Manual Svc Order vs. Electronic-Add'l	Incremental Charge - Manual Svc Order vs. Electronic-Disc 1st	Incremental Charge - Manual Svc Order vs. Electronic-Disc Add'l
							Rec	Nonrecurring		Nonrecurring Disconnect		OSS Rates ($)					
								First	Add'l	First	Add'l	SOMEC	SOMAN	SOMAN	SOMAN	SOMAN	SOMAN
		Each Additional DS1 Interoffice Channel per mile in same 3/1 Channel System per month			UNC1X	1L5XX	0.27										
		Each Additional DS1 Interoffice Channel Facility Termination in same 3/1 Channel System per month			UNC1X	U1TF1	61.71	89.47	81.99	16.39	14.48						
		Each Additional DS1 COCI in the same 3/1 channel system combination per month			UNC1X	UC1D1	8.64	6.59	4.73	0.00	0.00						
		Nonrecurring Currently Combined Network Elements Switch -As-Is Charge			UNC1X	UNCCC		5.61	5.61	7.00	7.00						
	EXTENDED 4-WIRE DS1 LOOP WITH DEDICATED DS1 INTEROFFICE TRANSPORT w/ 3/1 MUX																
		First 4-wire DS1 Digital Lcoal Loop in Combination - Zone 1		1	UNC1X	USLXX	90.87	253.03	157.89	44.80	11.73						
		First 4-wire DS1 Digital Lcoal Loop in Combination - Zone 2		2	UNC1X	USLXX	155.43	253.03	157.89	44.80	11.73						
		First 4-wire DS1 Digital Lcoal Loop in Combination - Zone 3		3	UNC1X	USLXX	261.89	253.03	157.89	44.80	11.73						
		First Interoffice Transport - Dedicated - DS1 combination - Per Mile Per Month			UNC1X	1L5XX	0.27										
		First Interoffice Transport - Dedicated - DS1 combination - Facility Termination Per Month			UNC1X	U1TF1	61.71	89.47	81.99	16.39	14.48						
		3/1 Channel System in combination per month			UNC3X	MQ3	144.02	178.54	94.18	33.33	31.90						
		Per each DS1 COCI combination per month			UNC1X	UC1D1	8.64	6.59	4.73	0.00	0.00						
		Each Additional DS1 Interoffice Channel per mile in same 3/1 Channel System per month			UNC1X	1L5XX	0.27										
		Each Additional DS1 Interoffice Channel Facility Termination in same 3/1 Channel System per month			UNC1X	U1TF1	61.71	89.47	81.99	16.39	14.48						
		Each Additional DS1 COCI in the same 3/1 channel system combination per month			UNC1X	UC1D1	8.64	6.59	4.73	0.00	0.00						
		Additional 4-Wire DS1 Digital Local Loop in Combination - Zone 1		1	UNC1X	USLXX	90.87	253.03	157.89	44.80	11.73						
		Additional 4-Wire DS1 Digital Local Loop in Combination - Zone 2		2	UNC1X	USLXX	155.43	253.03	157.89	44.80	11.73						
		Additional 4-Wire DS1 Digital Local Loop in Combination - Zone 3		3	UNC1X	USLXX	261.89	253.03	157.89	44.80	11.73						
		Nonrecurring Currently Combined Network Elements Switch -As-Is Charge			UNC1X	UNCCC		5.61	5.61	7.00	7.00						
	EXTENDED 4-WIRE 56 KBPS DIGITAL EXTENDED LOOP WITH DS0 INTEROFFICE TRANSPORT																
		First 4-wire 56 kbps Local Loop in combination - Zone 1		1	UNCDX	UDL56	29.93	126.66	89.12	59.35	14.61						
		First 4-wire 56 kbps Local Loop in combination - Zone 2		2	UNCDX	UDL56	33.99	126.66	89.12	59.35	14.61						
		First 4-wire 56 kbps Local Loop in combination - Zone 3		3	UNCDX	UDL56	34.74	126.66	89.12	59.35	14.61						
		First 4-wiree 56 kbps Interoffice Transport - Dedicated - Per Mile per month			UNCDX	1L5XX	0.0134										
		First 4-wire 56 kbps Interoffice Transport - Dedicated - Facility Termination per month			UNCDX	U1TD5	13.41	40.63	27.47	16.77	6.91						
		Nonrecurring Currently Combined Network Elements Switch -As-Is Charge			UNCDX	UNCCC		5.61	5.61	7.00	7.00						
	EXTENDED 4-WIRE 64 KBPS DIGITAL EXTENDED LOOP WITH DS0 INTEROFFICE TRANSPORT																
		First 4-wire 64 kbps Local Loop in combination - Zone 1		1	UNCDX	UDL64	29.93	126.66	89.12	59.35	14.61						
		First 4-wire 64 kbps Local Loop in combination - Zone 2		2	UNCDX	UDL64	33.99	126.66	89.12	59.35	14.61						
		First 4-wire 64 kbps Local Loop in combination - Zone 3		3	UNCDX	UDL64	34.74	126.66	89.12	59.35	14.61						
		First I4-wire 65 kbps Interoffice Transport - Dedicated - Per Mile per month			UNCDX	1L5XX	0.0134										
		First 4-wire 64 kbps Interoffice Transport - Dedicated - Facility Termination per month			UNCDX	U1TD6	13.41	40.63	27.47	16.77	6.91						
		Nonrecurring Currently Combined Network Elements Switch -As-Is Charge			UNCDX	UNCCC		5.61	5.61	7.00	7.00						
ADDITIONAL NETWORK ELEMENTS																	
	When used as a part of a currently combined facility, the non-recurrng charges do not apply, but a Switch As Is charge does apply.																
	When used as ordinarily combined network elements in All States, the non-recurring charges apply and the Switch As Is Charge does not.																
	Nonrecurring Currently Combined Network Elements "Switch As Is" Charge (One applies to each combination)																
		Nonrecurring Currently Combined Network Elements Switch -As-Is Charge - 2 wire/4-Wire VG			UNCVX	UNCCC		5.61	5.61	7.00	7.00						

UNBUNDLED NETWORK ELEMENTS - South Carolina														Attachment: 2		Exhibit: A	
CATEGORY		RATE ELEMENTS	Interim	Zone	BCS	USOC	RATES ($)					Svc Order Submitted Elec per LSR	Svc Order Submitted Manually per LSR	Incremental Charge - Manual Svc Order vs. Electronic-1st	Incremental Charge - Manual Svc Order vs. Electronic-Add'l	Incremental Charge - Manual Svc Order vs. Electronic-Disc 1st	Incremental Charge - Manual Svc Order vs. Electronic-Disc Add'l
							Rec	Nonrecurring		Nonrecurring Disconnect		OSS Rates ($)					
								First	Add'l	First	Add'l	SOMEC	SOMAN	SOMAN	SOMAN	SOMAN	SOMAN
		Nonrecurring Currently Combined Network Elements Switch -As-Is Charge - 56/64 kbps			UNCDX	UNCCC		5.61	5.61	7.00	7.00						
		Nonrecurring Currently Combined Network Elements Switch -As-Is Charge - DS1			UNC1X	UNCCC		5.61	5.61	7.00	7.00						
		Nonrecurring Currently Combined Network Elements Switch -As-Is Charge - DS3			UNC3X	UNCCC		5.61	5.61	7.00	7.00						
		Nonrecurring Currently Combined Network Elements Switch -As-Is Charge - STS1			UNCSX	UNCCC		5.61	5.61	7.00	7.00						
	Optional Features & Functions:																
		Clear Channel Capability Extended Frame Option - per DS1	I		U1TD1, ULDD1,UNC1X	CCOEF		0I	0I	0I	0I						
		Clear Channel Capability Super FrameOption - per DS1	I		U1TD1, ULDD1,UNC1X	CCOSF		0I	0I	0I	0I						
		Clear Channel Capability (SF/ESF) Option - Subsequent Activity - per DS1	I		ULDD1, U1TD1, UNC1X, USL	NRCCC		185.26S	23.86S	1.99S	0.78S						
		C-bit Parity Option - Subsequent Activity - per DS3	i		U1TD3, ULDD3, UE3, UNC3X	NRCC3		219.58S	7.69S	.7370S	0S						
	MULTIPLEXERS																
		DS1 to DS0 Channel System per month			UNC1X	MQ1	107.57	91.24	62.71	10.56	9.81						
		OCU-DP COCI (data) - DS1 to DS0 Channel System - per month (2.4-64kbs) used for a Local Loop			UDL	1D1DD	1.19	6.59	4.73								
		OCU-DP COCI (data) - DS1 to DS0 Channel System - per month (2.4-64kbs) used for connection to a channelized DS1 Local Channel in the same SWC as collocation			U1TUD	1D1DD	1.19	6.59	4.73								
		2-wire ISDN COCI (BRITE) - DS1 to DS0 Channel Systsem - per month for a Local Loop			UDN	UC1CA	2.56	6.59	4.73								
		2-wire ISDN COCI (BRITE) - DS1 to DS0 Channel Systsem - per month used for connection to a channelized DS1 Local Channel in the same SWC as collocation			U1TUB	UC1CA	2.56	6.59	4.73								
		Voice Grade COCI - DS1 to DS0 Channel System - per month used for a Local Loop			UEA	1D1VG	0.56	6.59	4.73								
		Voice Grade COCI - DS1 to DS0 Channel System - per month used for connection to a channelized DS1 Local Channel in the same SWC as collocation			U1TUC	1D1VG	0.56	6.59	4.73								
		DS3 to DS1 Channel System per month			UNC3X	MQ3	144.02	178.54	94.18	33.33	31.90						
		STS-1 to DS1 Channel System per month			UNCSX	MQ3	144.02	178.54	94.18	33.33	31.90						
		DS1 COCI used with Loop per month			USL	UC1D1	8.64	6.59	4.73								
		DS1 COCI (used for connection to a channelized DS1 Local Channel in the same SWC as collocation) per month			U1TUA	UC1D1	8.64	6.59	4.73								
		DS1 COCI used with Interoffice Channel per month			U1TD1	UC1D1	8.64	6.59	4.73								
		DS3 Interface Unit (DS1 COCI) used with Local Channel per month			ULDD1	UC1D1	8.64	6.59	4.73								
UNBUNDLED LOCAL EXCHANGE SWITCHING(PORTS)																	
	Exchange Ports																
	NOTE: Although the Port Rate includes all available features in GA, KY, LA & TN, the desired features will need to be ordered using retail USOCs																
	2-WIRE VOICE GRADE LINE PORT RATES (RES)																
		Exchange Ports - 2-Wire Analog Line Port- Res.			UEPSR	UEPRL	1.65	2.38	2.28	1.42	1.33						
		Exchange Ports - 2-Wire Analog Line Port with Caller ID - Res.			UEPSR	UEPRC	1.65	2.38	2.28	1.42	1.33						
		Exchange Ports - 2-Wire Analog Line Port outgoing only - Res.			UEPSR	UEPRO	1.65	2.38	2.28	1.42	1.33						
		Exchange Ports - 2-Wire VG unbundled SC extended local dialing parity Port with Caller ID - Res.			UEPSR	UEPAU	1.65	2.38	2.28	1.42	1.33						
		Exchange Ports - 2-Wire VG unbundled South Carolina Area Calling port with Caller ID - Res (LW8)			UEPSR	UEPAJ	1.65	2.38	2.28	1.42	1.33						
		Exchange Ports - 2-Wire VG unbundled res, low usage line port with Caller ID (LUM)			UEPSR	UEPAP	1.65	2.38	2.28	1.42	1.33						
		Exchange Ports - 2-Wire VG South Carolina Residence Dialing Plan without Caller ID			UEPSR	UEPWL	1.65	2.38	2.28	1.42	1.33						

UNBUNDLED NETWORK ELEMENTS - South Carolina														Attachment: 2		Exhibit: A	
CATEGORY	RATE ELEMENTS	Interim	Zone	BCS	USOC	RATES ($)					Svc Order Submitted Elec per LSR	Svc Order Submitted Manually per LSR	Incremental Charge - Manual Svc Order vs. Electronic-1st	Incremental Charge - Manual Svc Order vs. Electronic-Add'l	Incremental Charge - Manual Svc Order vs. Electronic-Disc 1st	Incremental Charge - Manual Svc Order vs. Electronic-Disc Add'l
						Rec	Nonrecurring		Nonrecurring Disconnect		OSS Rates ($)					
							First	Add'l	First	Add'l	SOMEC	SOMAN	SOMAN	SOMAN	SOMAN	SOMAN
	Exchange Ports - 2-Wire VG South Carolina Residence Area Calling Plan without Caller ID capability			UEPSR	UEPRS	1.65	2.38	2.28	1.42	1.33						
	2-Wire voice unbundled Low Usage Line Port without Caller ID Capability			UEPSR	UEPRT	1.65	2.38	2.28	1.42	1.33						
	Subsequent Activity			UEPSR	USASC	0.00	0.00	0.00								
FEATURES																
	All Available Vertical Features			UEPSR	UEPVF	3.04	0.00	0.00								
2-WIRE VOICE GRADE LINE PORT RATES (BUS)																
	Exchange Ports - 2-Wire Analog Line Port without Caller ID - Bus			UEPSB	UEPBL	1.65	2.38	2.28	1.42	1.33						
	Exchange Ports - 2-Wire VG unbundled Line Port with unbundled port with Caller+E484 ID - Bus.			UEPSB	UEPBC	1.65	2.38	2.28	1.42	1.33						
	Exchange Ports - 2-Wire Analog Line Port outgoing only - Bus.			UEPSB	UEPBO	1.65	2.38	2.28	1.42	1.33						
	Exchange Ports - 2-Wire VG unbundled SC extended local dialing parity Port with Caller ID - Bus.			UEPSB	UEPAZ	1.65	2.38	2.28	1.42	1.33						
	Exhange Ports - 2-Wire VG unbundled incoming only port with Caller ID - Bus			UEPSB	UEPB1	1.65	2.38	2.28	1.42	1.33						
	Exchange Ports - 2-Wire VG unbundled South Carolina Bus Area Calling Port with Caller ID - Bus (LMB)			UEPSB	UEPAB	1.65	2.38	2.28	1.42	1.33						
	Exchange Ports - 2-Wire Voice South Carolina Business Dialing Plan without Caller ID			UEPSB	UEPWM	1.65	2.38	2.28	1.42	1.33						
	Exchange Ports - 2-Wire Voice South Carolina Business Area Calling Port without Caller ID			UEPSB	UEPBB	1.65	2.38	2.28	1.42	1.33						
	2-Wire voice unbundled Incoming Only Port without Caller ID Capability			UEPSB	UEPBE	1.65	2.38	2.28	1.42	1.33						
	Subsequent Activity			UEPSB	USASC	0.00	0.00	0.00								
FEATURES																
	All Available Vertical Features			UEPSB	UEPVF	3.04	0.00	0.00								
	All Available Vertical Features				UEPVF	3.04	0.00	0.00								
EXCHANGE PORT RATES (DID & PBX)																
	2-Wire VG Unbundled 2-Way PBX Trunk - Res			UEPSE	UEPRD	1.65	31.34	14.88	13.97	0.90						
	2-Wire VG Line Side Unbundled 2-Way PBX Trunk - Bus			UEPSP	UEPPC	1.65	31.34	14.88	13.97	0.90						
	2-Wire VG Line Side Unbundled Outward PBX Trunk - Bus			UEPSP	UEPPO	1.65	31.34	14.88	13.97	0.90						
	2-Wire VG Line Side Unbundled Incoming PBX Trunk - Bus			UEPSP	UEPP1	1.65	31.34	14.88	13.97	0.90						
	2-Wire Analog Long Distance Terminal PBX Trunk - Bus			UEPSP	UEPLD	1.65	31.34	14.88	13.97	0.90						
	2-Wire Voice Unbundled PBX LD Terminal Ports			UEPSP	UEPLD	1.65	31.34	14.88	13.97	0.90						
	2-Wire Vice Unbundled 2-Way PBX Usage Port			UEPSP	UEPXA	1.65	31.34	14.88	13.97	0.90						
	2-Wire Voice Unbundled PBX Toll Terminal Hotel Ports			UEPSP	UEPXB	1.65	31.34	14.88	13.97	0.90						
	2-Wire Voice Unbundled PBX LD DDD Terminals Port			UEPSP	UEPXC	1.65	31.34	14.88	13.97	0.90						
	2-Wire Voice Unbundled PBX LD Terminal Switchboard Port			UEPSP	UEPXD	1.65	31.34	14.88	13.97	0.90						
	2-Wire Voice Unbundled PBX LD Terminal Switchboard IDD Capable Port			UEPSP	UEPXE	1.65	31.34	14.88	13.97	0.90						
	2-Wire Voice Unbundled 2-Way PBX Hotel/Hospital Economy Administrative Calling Port			UEPSP	UEPXL	1.65	31.34	14.88	13.97	0.90						
	2-Wire Voice Unbundled 2-Way PBX Hotel/Hospital Economy Room Calling Port			UEPSP	UEPXM	1.65	31.34	14.88	13.97	0.90						
	2-Wire Voice Unbundled 1-Way Outgoing PBX Hotel/Hospital Discount Room Calling Port			UEPSP	UEPXO	1.65	31.34	14.88	13.97	0.90						
	2-Wire Voice Unbundled 1-Way Outgoing PBX Measured Port			UEPSP	UEPXS	1.65	31.34	14.88	13.97	0.90						
	2-Wire Voice Unbundled 2-Way PBX South Carolina Area Plus Calling Port			UEPSP	UEPXT	1.65	31.34	14.88	13.97	0.90						
	Subsequent Activity			UEPSP	USASC	0.00	0.00	0.00								
FEATURES																
	All Available Vertical Features			UEPSP UEPSE	UEPVF	3.04	0.00	0.00								
EXCHANGE PORT RATES (COIN)																
	Exchange Ports - Coin Port					1.65	2.38	2.28	1.42	1.33						
Local Switching Features offered with Port																
NOTE: Transmission/usage charges associated with POTS circuit switched usage will also apply to circuit switched voice and/or circuit switched data transmission by B-Channels associated with 2-wire ISDN ports.																

UNBUNDLED NETWORK ELEMENTS - South Carolina														Attachment: 2		Exhibit: A	
CATEGORY	RATE ELEMENTS	Interim	Zone	BCS	USOC	RATES ($)					Svc Order Submitted Elec per LSR	Svc Order Submitted Manually per LSR	Incremental Charge - Manual Svc Order vs. Electronic-1st	Incremental Charge - Manual Svc Order vs. Electronic-Add'l	Incremental Charge - Manual Svc Order vs. Electronic-Disc 1st	Incremental Charge - Manual Svc Order vs. Electronic-Disc Add'l
						Rec	Nonrecurring		Nonrecurring Disconnect		OSS Rates ($)					
							First	Add'l	First	Add'l	SOMEC	SOMAN	SOMAN	SOMAN	SOMAN	SOMAN
	NOTE: Access to B Channel or D Channel Packet capabilities will be available only through BFR/New Business Request Process. Rates for the packet capabilities will be determined via the Bona Fide Request/New Business Request Process.															
UNBUNDLED LOCAL EXCHANGE SWITCHING(PORTS)																
	EXCHANGE PORT RATES															
	The DS1 Port rates below for 4-Wire DDITS Trunk Port and 4-Wire ISDN Port in this rate exhibit apply to the embedded base in place as of 10/2/03 until 4/1/04. After 4/1/04 these rates shall revert to tariff rates or a separate agreement.															
	Requests for 4-Wire DDITS Trunk Ports with 4-Wire ISDN DS1 Ports after the effective date of this amendment shall be provided pursuant to a separate agreement or tariff at BellSouth's discretion.															
	Exchange Ports - 2-Wire DID Port			UEPEX	UEPP2	8.86	119.57	18.78	60.03	3.77						
	Exchange Ports - DDITS Port - 4-Wire DS1 Port with DID capability (E:4/1/2004)			UEPDD	UEPDD	73.62	202.47	95.90	72.75	2.47						
	Exchange Ports - 2-Wire ISDN Port (See Notes below.)			UEPTX, UEPSX	U1PMA	13.38	72.93	53.11	47.90	10.76						
	All Features Offered			UEPTX, UEPSX	UEPVF	3.04	0.00	0.00								
	Exchange Ports - 2-Wire ISDN Port -- Channel Profiles			UEPTX, UEPSX	U1UMA	0.00	0.00	0.00								
	NOTE: Transmission/usage charges associated with POTS circuit switched usage will also apply to circuit switched voice and/or circuit switched data transmission by B-Channels associated with 2-wire ISDN ports.															
	NOTE: Access to B Channel or D Channel Packet capabilities will be available only through BFR/New Business Request Process. Rates for the packet capabilities will be determined via the Bona Fide Request/New Business Request Process.															
	EXCHANGE PORT RATES (continued)															
	Exchange Ports - 4-Wire ISDN DS1 Port with Detailed E911 Locator Capability (E:4/1/2004)			UEPEX	UEPEX	107.44	204.27	101.78	79.35	20.10						
	Exchange Ports - 4-Wire ISDN DS1 Port (E:4/1/2004)			UEPDX	UEPDX	107.44	204.27	101.78	79.35	20.10						
	Physical Collocation - DS1 Cross-Connects			UEPEX UEPDX	PE1P1	1.12	22.08	15.96	6.42	5.80						
	Virtual collocation - Special Access & UNE,cross-connect per DS1			UEPEX UEPDX	CNC1X	1.12	22.08	15.96	6.42	5.80						
	Detailed E911 with Locator Capability (required with UEPEX port)															
	Unbundled Exchange Ports, 4-Wire ISDN DS1 Port - E911 Locator Capability - Initial Profile Establishment per CLEC per State			UEPEX	UEP1A	0.00	1,808.00		156.43							
	Unbundled Exchange Ports, 4-Wire ISDN DS1 Port - E911 Locator Capability - Subsequent Profile Changes, Additions, Deletions			UEPEX	UEP1B	0.00	175.53									
	New or Additional PRI Telephone Numbers															
	Unbundled Exchange Ports, 4-Wire ISDN DS1 Port - E911 Locator Capability 2-way Telephone Numbers, per number in E911 profile [New or Additional]			UEPEX	UEP1C	0.0698	0.49	0.49								
	Unbundled Exchange Ports, 4-Wire ISDN DS1 Port - E911 Locator Capability - Outdial Telephone Numbers, per number in E911 profile [New or Additional]			UEPEX	UEP1D	0.0698	11.54	11.54								
	Unbundled Exchange Ports, 4-Wire ISDN DS1 Port - Inward Telephone Numbers - Inward Data Only Option [New or Additional]			UEPDX	UEP1E	0.00	0.49	0.49								
	Exchange Ports - 4-Wire ISDN DS1 Port - Subsequent [New] Inward Tel Numbers [Customer Testing Purposes]			UEPEX	PR7ZT	0.00	23.07	23.07								
	LOCAL NUMBER PORTABILITY															
	Local Number Portability (1 per port)			UEPEX UEPDX	LNPCN	1.75										
	INTERFACE (Provsioning Only)															
	Voice/Data			UEPEX	PR71V	0.00	0.00	0.00								
	Digital Data			UEPEX	PR71D	0.00	0.00	0.00								
	Inward Data			UEPDX	PR71E	0.00	0.00	0.00								
	New or Additional Channel															
	New or Additional - Voice/Data "B" Channel			UEPEX	PR7BV	0.00	14.56									
	New or Additional - Digital Data "B" Channel			UEPEX	PR7BF	0.00	14.56									
	New or Additional Inward Data "B" Channel			UEPDX	PR7BD	0.00	14.56									
	New or Additional Useage Sensitive Voice Data "B" Channel			UEPEX	PR7BS	0.00										
	New or Additional Useage Sensitive Digital Data "B" Channel			UEPEX	PR7BU	0.00										
	New or Additional PRI "D" Channel			UEPEX	PR7EX	0.00	14.56									
	CALL TYPES															
	Inward			UEPEX UEPDX	PR7C1	0.00	0.00	0.00								
	Outward			UEPEX	PR7CO	0.00	0.00	0.00								
	Two-way			UEPEX	PR7CC	0.00	0.00	0.00								
	UNBUNDLED PORT with REMOTE CALL FORWARDING CAPABILITY															
	UNBUNDLED REMOTE CALL FORWARDING SERVICE - RESIDENCE															
	Unbundled Remote Call Forwarding Service, Area Calling, Res			UEPVR	UERAC	1.65	2.38	2.28	1.42	1.33						

UNBUNDLED NETWORK ELEMENTS - South Carolina														Attachment: 2		Exhibit: A	
CATEGORY		RATE ELEMENTS	Interim	Zone	BCS	USOC	RATES ($)					Svc Order Submitted Elec per LSR	Svc Order Submitted Manually per LSR	Incremental Charge - Manual Svc Order vs. Electronic-1st	Incremental Charge - Manual Svc Order vs. Electronic-Add'l	Incremental Charge - Manual Svc Order vs. Electronic-Disc 1st	Incremental Charge - Manual Svc Order vs. Electronic-Disc Add'l
							Rec	Nonrecurring		Nonrecurring Disconnect		OSS Rates ($)					
								First	Add'l	First	Add'l	SOMEC	SOMAN	SOMAN	SOMAN	SOMAN	SOMAN
		Unbundled Remote Call Forwarding Service, Local Calling - Res			UEPVR	UERLC	1.65	2.38	2.28	1.42	1.33						
		Unbundled Remote Call Forwarding Service, InterLATA - Res			UEPVR	UERTE	1.65	2.38	2.28	1.42	1.33						
		Unbundled Remote Call Forwarding Service, IntraLATA - Res			UEPVR	UERTR	1.65	2.38	2.28	1.42	1.33						
	Non-Recurring																
		Unbundled Remote Call Forwarding Service - Conversion - Switch-as-is			UEPVR	USAC2		0.10	0.10								
		Unbundled Remote Call Forwarding Service - Conversion with allowed change (PIC and LPIC)			UEPVR	USACC		0.10	0.10								
	UNBUNDLED REMOTE CALL FORWARDING - Bus																
		Unbundled Remote Call Forwarding Service, Area Calling - Bus			UEPVB	UERAC	1.65	2.38	2.28	1.42	1.33						
		Unbundled Remote Call Forwarding Service, Local Calling - Bus			UEPVB	UERLC	1.65	2.38	2.28	1.42	1.33						
		Unbundled Remote Call Forwarding Service, InterLATA - Bus			UEPVB	UERTE	1.65	2.38	2.28	1.42	1.33						
		Unbundled Remote Call Forwarding Service, IntraLATA - Bus			UEPVB	UERTR	1.65	2.38	2.28	1.42	1.33						
		Unbundled Remote Call Forwarding Service Expanded and Exception Local Calling			UEPVB	UERVJ	1.65	2.38	2.28	1.42	1.33						
	Non-Recurring																
		Unbundled Remote Call Forwarding Service - Conversion - Switch-as-is			UEPVB	USAC2		0.10	0.10								
		Unbundled Remote Call Forwarding Service - Conversion with allowed change (PIC and LPIC)			UEPVB	USACC		0.10	0.10								
UNBUNDLED LOCAL SWITCHING, PORT USAGE																	
	End Office Switching (Port Usage)																
		End Office Switching Function, Per MOU					0.0010519										
		End Office Trunk Port - Shared, Per MOU					0.0002136										
	Tandem Switching (Port Usage) (Local or Access Tandem)																
		Tandem Switching Function Per MOU					0.0001634										
		Tandem Trunk Port - Shared, Per MOU					0.0002863										
		Tandem Switching Function Per MOU (Melded)					0.00004951										
		Tandem Trunk Port - Shared, Per MOU (Melded)					0.000086749										
		Melded Factor: 30.30% of the Tandem Rate															
	Common Transport																
		Common Transport - Per Mile, Per MOU					0.0000045										
		Common Transport - Facilities Termination Per MOU					0.0004095										
UNBUNDLED PORT/LOOP COMBINATIONS - COST BASED RATES																	
	Cost Based Rates are applied where BellSouth is required by FCC and/or State Commission rule to provide Unbundled Local Switching or Switch Ports.																
	Features shall apply to the Unbundled Port/Loop Combination - Cost Based Rate section in the same manner as they are applied to the Stand-Alone Unbundled Port section of this Rate Exhibit.																
	End Office and Tandem Switching Usage and Common Transport Usage rates in the Port section of this rate exhibit shall apply to all combinations of loop/port network elements except for UNE Coin Port/Loop Combinations.																
	The first and additional Port nonrecurring charges apply to Not Currently Combined Combos. For Currently Combined Combos the nonrecurring charges shall be those identified in the Nonrecurring - Currently Combined sections.																
	2-WIRE VOICE GRADE LOOP WITH 2-WIRE LINE PORT (RES)																
	UNE Port/Loop Combination Rates																
		2-Wire VG Loop/Port Combo - Zone 1		1			14.89										
		2-Wire VG Loop/Port Combo - Zone 2		2			21.52										
		2-Wire VG Loop/Port Combo - Zone 3		3			27.17										
	UNE Loop Rates																
		2-Wire Voice Grade Loop (SL1) - Zone 1		1	UEPRX	UEPLX	13.76										
		2-Wire Voice Grade Loop (SL1) - Zone 2		2	UEPRX	UEPLX	20.38										
		2-Wire Voice Grade Loop (SL1) - Zone 3		3	UEPRX	UEPLX	26.04										
	2-Wire Voice Grade Line Port Rates (Res)																
		2-Wire voice unbundled port - residence			UEPRX	UEPRL	1.13	40.30	19.90	24.98	6.65						
		2-Wire voice unbundled port with Caller ID - res			UEPRX	UEPRC	1.13	40.30	19.90	24.98	6.65						
		2-Wire voice unbundled port outgoing only - res			UEPRX	UEPRO	1.13	40.30	19.90	24.98	6.65						
		2-Wire voice Grade unbundled South Carolina extended local dialing parity port with Caller ID - res			UEPRX	UEPAU	1.13	40.30	19.90	24.98	6.65						
		2-Wire voice unbundled South Carolina Area Calling port with Caller ID - res (LW8)			UEPRX	UEPAJ	1.13	40.30	19.90	24.98	6.65						

UNBUNDLED NETWORK ELEMENTS - South Carolina														Attachment: 2		Exhibit: A	
CATEGORY	RATE ELEMENTS	Interim	Zone	BCS	USOC	RATES ($)					Svc Order Submitted Elec per LSR	Svc Order Submitted Manually per LSR	Incremental Charge - Manual Svc Order vs. Electronic-1st	Incremental Charge - Manual Svc Order vs. Electronic-Add'l	Incremental Charge - Manual Svc Order vs. Electronic-Disc 1st	Incremental Charge - Manual Svc Order vs. Electronic-Disc Add'l
						Rec	Nonrecurring		Nonrecurring Disconnect		OSS Rates ($)					
							First	Add'l	First	Add'l	SOMEC	SOMAN	SOMAN	SOMAN	SOMAN	SOMAN
	2-Wire voice unbundles res, low usage line port with Caller ID (LUM)			UEPRX	UEPAP	1.13	37.93	16.72								
	2-Wire Voice Unbundled South Carolina Residence Dialing Plan without Caller ID			UEPRX	UEPWL	1.13	40.30	19.90	24.98	6.65						
	2-Wire voice unbundled South Carolina Area Calling Port without Caller ID Capability			UEPRX	UEPRS	1.13	40.30	19.90	24.98	6.65						
	2-Wire voice unbundled Low Usage Line Port without Caller ID Capability			UEPRX	UEPRT	1.13	40.30	19.90	24.98	6.65						
FEATURES																
	All Features Offered			UEPRX	UEPVF	3.04	0.00	0.00								
LOCAL NUMBER PORTABILITY																
	Local Number Portability (1 per port)			UEPRX	LNPCX	0.35										
NONRECURRING CHARGES (NRCs) - CURRENTLY COMBINED																
	2-Wire Voice Grade Loop / Line Port Combination - Conversion - Switch-as-is			UEPRX	USAC2		0.10	0.10								
	2-Wire Voice Grade Loop / Line Port Combination - Conversion - Switch with change			UEPRX	USACC		0.10	0.10								
ADDITIONAL NRCs																
	2-Wire Voice Grade Loop/Line Port Combination - Subsequent Activity			UEPRX	USAS2	0.00	0.00	0.00								
	Unbundled Miscellaneous Rate Element, Tag Loop at End User Premise			UEPRX	URETL		8.33	0.83								
OFF/ON PREMISES EXTENSION CHANNELS																
	2 Wire Analog Voice Grade Extension Loop – Non-Design		1	UEPRX	UEAEN	14.94	37.92	17.62	23.56	5.32						
	2 Wire Analog Voice Grade Extension Loop – Non-Design		2	UEPRX	UEAEN	21.39	37.92	17.62	23.56	5.32						
	2 Wire Analog Voice Grade Extension Loop – Non-Design		3	UEPRX	UEAEN	26.72	37.92	17.62	23.56	5.32						
	2 Wire Analog Voice Grade Extension Loop – Design		1	UEPRX	UEAED	16.68	105.98	68.43	53.05	10.61						
	2 Wire Analog Voice Grade Extension Loop – Design		2	UEPRX	UEAED	23.13	105.98	68.43	53.05	10.61						
	2 Wire Analog Voice Grade Extension Loop – Design		3	UEPRX	UEAED	28.46	105.98	68.43	53.05	10.61						
INTEROFFICE TRANSPORT																
	Interoffice Transport - Dedicated - 2 Wire Voice Grade - Facility Termination			UEPRX	U1TV2	24.30	40.63	27.47	16.77	6.91						
	Interoffice Transport - Dedicated - 2 Wire Voice Grade - Per Mile or Fraction Mile			UEPRX	U1TVM	0.0167	0.00	0.00								
2-WIRE VOICE GRADE LOOP WITH 2-WIRE LINE PORT (BUS)																
UNE Port/Loop Combination Rates																
	2-Wire VG Loop/Port Combo - Zone 1		1			14.89										
	2-Wire VG Loop/Port Combo - Zone 2		2			21.52										
	2-Wire VG Loop/Port Combo - Zone 3		3			27.17										
UNE Loop Rates																
	2-Wire Voice Grade Loop (SL1) - Zone 1		1	UEPBX	UEPLX	13.76										
	2-Wire Voice Grade Loop (SL1) - Zone 2		2	UEPBX	UEPLX	20.38										
	2-Wire Voice Grade Loop (SL1) - Zone 3		3	UEPBX	UEPLX	26.04										
2-Wire Voice Grade Line Port (Bus)																
	2-Wire voice unbundled port without Caller ID - bus			UEPBX	UEPBL	1.13	40.30	19.90	24.98	6.65						
	2-Wire voice unbundled port with Caller + E484 ID - bus			UEPBX	UEPBC	1.13	40.30	19.90	24.98	6.65						
	2-Wire voice unbundled port outgoing only - bus			UEPBX	UEPBO	1.13	40.30	19.90	24.98	6.65						
	2-Wire voice Grade unbundled South Carolina extended local dialing parity port with Caller ID - bus			UEPBX	UEPAZ	1.13	40.30	19.90	24.98	6.65						
	2-Wire voice unbundled incoming only port with Caller ID - Bus			UEPBX	UEPB1	1.13	40.30	19.90	24.98	6.65						
	2-Wire voice unbundled South Carolina Bus Area Calling Port with Caller ID (LMB)			UEPBX	UEPAB	1.13	40.30	19.90	24.98	6.65						
	2-Wire Voice Unbundled South Carolina Business Dialing Plan without Caller ID			UEPBX	UEPWM	1.13	40.30	19.90	24.98	6.65						
	2-Wire voice unbundled South Carolina Business Area Calling Port without Caller ID Capability			UEPBX	UEPBB	1.13	40.30	19.90	24.98	6.65						
	2-Wire voice unbundled Incoming Only Port without Caller ID Capability			UEPBX	UEPBE	1.13	40.30	19.90	24.98	6.65						
LOCAL NUMBER PORTABILITY																

UNBUNDLED NETWORK ELEMENTS - South Carolina														Attachment: 2		Exhibit: A	
CATEGORY		RATE ELEMENTS	Interim	Zone	BCS	USOC	RATES ($)					Svc Order Submitted Elec per LSR	Svc Order Submitted Manually per LSR	Incremental Charge - Manual Svc Order vs. Electronic-1st	Incremental Charge - Manual Svc Order vs. Electronic-Add'l	Incremental Charge - Manual Svc Order vs. Electronic-Disc 1st	Incremental Charge - Manual Svc Order vs. Electronic-Disc Add'l
							Rec	Nonrecurring		Nonrecurring Disconnect		OSS Rates ($)					
								First	Add'l	First	Add'l	SOMEC	SOMAN	SOMAN	SOMAN	SOMAN	SOMAN
		Local Number Portability (1 per port)			UEPBX	LNPCX	0.35										
	FEATURES																
		All Features Offered			UEPBX	UEPVF	3.04	0.00	0.00								
	NONRECURRING CHARGES (NRCs) - CURRENTLY COMBINED																
		2-Wire Voice Grade Loop / Line Port Combination - Conversion - Switch-as-is			UEPBX	USAC2		0.10	0.10								
		2-Wire Voice Grade Loop / Line Port Combination - Conversion - Switch with change			UEPBX	USACC		0.10	0.10								
	ADDITIONAL NRCs																
		2-Wire Voice Grade Loop/Line Port Combination - Subsequent Activity			UEPBX	USAS2		0.00	0.00								
		Unbundled Miscellaneous Rate Element, Tag Loop at End User Premise			UEPBX	URETL		8.33	0.83								
	OFF/ON PREMISES EXTENSION CHANNELS																
		2 Wire Analog Voice Grade Extension Loop – Non-Design		1	UEPBX	UEAEN	14.94	37.92	17.62	23.56	5.32						
		2 Wire Analog Voice Grade Extension Loop – Non-Design		2	UEPBX	UEAEN	21.39	37.92	17.62	23.56	5.32						
		2 Wire Analog Voice Grade Extension Loop – Non-Design		3	UEPBX	UEAEN	26.72	37.92	17.62	23.56	5.32						
		2 Wire Analog Voice Grade Extension Loop – Design		1	UEPBX	UEAED	16.68	105.98	68.43	53.05	10.61						
		2 Wire Analog Voice Grade Extension Loop – Design		2	UEPBX	UEAED	23.13	105.98	68.43	53.05	10.61						
		2 Wire Analog Voice Grade Extension Loop – Design		3	UEPBX	UEAED	28.46	105.98	68.43	53.05	10.61						
	INTEROFFICE TRANSPORT																
		Interoffice Transport - Dedicated - 2 Wire Voice Grade - Facility Termination			UEPBX	U1TV2	24.30	40.63	27.47	16.77	6.91						
		Interoffice Transport - Dedicated - 2 Wire Voice Grade - Per Mile or Fraction Mile			UEPBX	U1TVM	0.0167	0.00	0.00								
	2-WIRE VOICE GRADE LOOP WITH 2-WIRE LINE PORT (RES - PBX)																
	UNE Port/Loop Combination Rates																
		2-Wire VG Loop/Port Combo - Zone 1		1			14.89										
		2-Wire VG Loop/Port Combo - Zone 2		2			21.52										
		2-Wire VG Loop/Port Combo - Zone 3		3			27.17										
	UNE Loop Rates																
		2-Wire Voice Grade Loop (SL 1) - Zone 1		1	UEPRG	UEPLX	13.76										
		2-Wire Voice Grade Loop (SL 1) - Zone 2		2	UEPRG	UEPLX	20.38										
		2-Wire Voice Grade Loop (SL 1) - Zone 3		3	UEPRG	UEPLX	26.04										
	2-Wire Voice Grade Line Port Rates (RES - PBX)																
		2-Wire VG Unbundled Combination 2-Way PBX Trunk Port - Res			UEPRG	UEPRD	1.13	69.26	32.50	37.53	6.22						
	LOCAL NUMBER PORTABILITY																
		Local Number Portability (1 per port)			UEPRG	LNPCP	3.15	0.00	0.00								
	FEATURES																
		All Features Offered			UEPRG	UEPVF	3.04	0.00	0.00								
	NONRECURRING CHARGES (NRCs) - CURRENTLY COMBINED																
		2-Wire Voice Grade Loop/ Line Port Combination (PBX) - Conversion - Switch-As-Is			UEPRG	USAC2		7.93	1.91								
		2-Wire Voice Grade Loop/ Line Port Combination (PBX) - Conversion - Switch with Change			UEPRG	USACC		7.93	1.91								
	ADDITIONAL NRCs																
		2-Wire Voice Grade Loop/ Line Port Combination (PBX) - Subsequent Activity			UEPRG	USAS2	0.00	0.00	0.00								
		PBX Subsequent Activity - Change/Rearrange Multiline Hunt Group						7.34	7.34								
		Unbundled Miscellaneous Rate Element, Tag Loop at End User Premise			UEPRG	URETL		8.33	0.83								
	OFF/ON PREMISES EXTENSION CHANNELS																
		Local Channel Voice grade, per termination		1	UEPRG	P2JHX	16.68	105.98	68.43	53.05	10.61						
		Local Channel Voice grade, per termination		2	UEPRG	P2JHX	23.13	105.98	68.43	53.05	10.61						
		Local Channel Voice grade, per termination		3	UEPRG	P2JHX	28.46	105.98	68.43	53.05	10.61						
		Non-Wire Direct Serve Channel Voice Grade		1	UEPRG	SDD2X	17.74	131.88	62.06	90.70	13.42						
		Non-Wire Direct Serve Channel Voice Grade		2	UEPRG	SDD2X	25.16	65.94	31.03	45.35	6.71						

UNBUNDLED NETWORK ELEMENTS - South Carolina														Attachment: 2		Exhibit: A	
CATEGORY		RATE ELEMENTS	Interim	Zone	BCS	USOC	RATES ($)					Svc Order Submitted Elec per LSR	Svc Order Submitted Manually per LSR	Incremental Charge - Manual Svc Order vs. Electronic-1st	Incremental Charge - Manual Svc Order vs. Electronic-Add'l	Incremental Charge - Manual Svc Order vs. Electronic-Disc 1st	Incremental Charge - Manual Svc Order vs. Electronic-Disc Add'l
							Rec	Nonrecurring		Nonrecurring Disconnect		OSS Rates ($)					
								First	Add'l	First	Add'l	SOMEC	SOMAN	SOMAN	SOMAN	SOMAN	SOMAN
		Non-Wire Direct Serve Channel Voice Grade		3	UEPRG	SDD2X	29.58	65.94	31.03	45.35	6.71						
	INTEROFFICE TRANSPORT																
		Interoffice Transport - Dedicated - 2 Wire Voice Grade - Facility Termination			UEPRG	U1TV2	24.30	40.63	27.47	16.77	6.91						
		Interoffice Transport - Dedicated - 2 Wire Voice Grade - Per Mile or Fraction Mile			UEPRG	U1TVM	0.0167	0.00	0.00								
	2-WIRE VOICE GRADE LOOP WITH 2-WIRE LINE PORT (BUS - PBX)																
	UNE Port/Loop Combination Rates																
		2-Wire VG Loop/Port Combo - Zone 1		1			14.89										
		2-Wire VG Loop/Port Combo - Zone 2		2			21.52										
		2-Wire VG Loop/Port Combo - Zone 3		3			27.17										
	UNE Loop Rates																
		2-Wire Voice Grade Loop (SL 1) - Zone 1		1	UEPPX	UEPLX	13.76										
		2-Wire Voice Grade Loop (SL 1) - Zone 2		2	UEPPX	UEPLX	20.38										
		2-Wire Voice Grade Loop (SL 1) - Zone 3		3	UEPPX	UEPLX	26.04										
	2-Wire Voice Grade Line Port Rates (BUS - PBX)																
		Line Side Unbundled Combination 2-Way PBX Trunk Port - Bus			UEPPX	UEPPC	1.13	69.26	32.50	37.53	6.22						
		Line Side Unbundled Outward PBX Trunk Port - Bus			UEPPX	UEPPO	1.13	69.26	32.50	37.53	6.22						
		Line Side Unbundled Incoming PBX Trunk Port - Bus			UEPPX	UEPP1	1.13	69.26	32.50	37.53	6.22						
		2-Wire Voice Unbundled PBX LD Terminal Ports			UEPPX	UEPLD	1.13	69.26	32.50	37.53	6.22						
		2-Wire Voice Unbundled 2-Way Combination PBX Usage Port			UEPPX	UEPXA	1.13	69.26	32.50	37.53	6.22						
		2-Wire Voice Unbundled PBX Toll Terminal Hotel Ports			UEPPX	UEPXB	1.13	69.26	32.50	37.53	6.22						
		2-Wire Voice Unbundled PBX LD DDD Terminals Port			UEPPX	UEPXC	1.13	69.26	32.50	37.53	6.22						
		2-Wire Voice Unbundled PBX LD Terminal Switchboard Port			UEPPX	UEPXD	1.13	69.26	32.50	37.53	6.22						
		2-Wire Voice Unbundled PBX LD Terminal Switchboard IDD Capable Port			UEPPX	UEPXE	1.13	69.26	32.50	37.53	6.22						
		2-Wire Voice Unbundled 2-Way PBX Hotel/Hospital Economy Administrative Calling Port			UEPPX	UEPXL	1.13	69.26	32.50	37.53	6.22						
		2-Wire Voice Unbundled 2-Way PBX Hotel/Hospital Economy Room Calling Port			UEPPX	UEPXM	1.13	69.26	32.50	37.53	6.22						
		2-Wire Voice Unbundled 1-Way Outgoing PBX Hotel/Hospital Discount Room Calling Port			UEPPX	UEPXO	1.13	69.26	32.50	37.53	6.22						
		2-Wire Voice Unbundled 1-Way Outgoing PBX Measured Port			UEPPX	UEPXS	1.13	69.26	32.50	37.53	6.22						
		2-Wire Voice Unbundled 2-Way PBX South Carolina Area Plus Calling Port			UEPPX	UEPXT	1.13	69.26	32.50	37.53	6.22						
	LOCAL NUMBER PORTABILITY																
		Local Number Portability (1 per port)			UEPPX	LNPCP	3.15	0.00	0.00								
	FEATURES																
		All Features Offered			UEPPX	UEPVF	3.04	0.00	0.00								
	NONRECURRING CHARGES (NRCs) - CURRENTLY COMBINED																
		2-Wire Voice Grade Loop/ Line Port Combination (PBX) - Conversion - Switch-As-Is			UEPPX	USAC2		7.93	1.91								
		2-Wire Voice Grade Loop/ Line Port Combination (PBX) - Conversion - Switch with Change			UEPPX	USACC		7.93	1.91								
	ADDITIONAL NRCs																
		2-Wire Voice Grade Loop/ Line Port Combination (PBX) - Subsequent Activity			UEPPX	USAS2	0.00	0.00	0.00								
		PBX Subsequent Activity - Change/Rearrange Multiline Hunt Group						7.34	7.34								
		Unbundled Miscellaneous Rate Element, Tag Loop at End User Premise			UEPPX	URETL		8.33	0.83								
	OFF/ON PREMISES EXTENSION CHANNELS																
		Local Channel Voice grade, per termination		1	UEPPX	P2JHX	16.68	105.98	68.43	53.05	10.61						
		Local Channel Voice grade, per termination		2	UEPPX	P2JHX	23.13	105.98	68.43	53.05	10.61						
		Local Channel Voice grade, per termination		3	UEPPX	P2JHX	28.46	105.98	68.43	53.05	10.61						
		Non-Wire Direct Serve Channel Voice Grade		1	UEPPX	SDD2X	17.74	131.88	62.06	90.70	13.42						
		Non-Wire Direct Serve Channel Voice Grade		2	UEPPX	SDD2X	25.16	65.94	31.03	45.35	6.71						
		Non-Wire Direct Serve Channel Voice Grade		3	UEPPX	SDD2X	29.58	65.94	31.03	45.35	6.71						

UNBUNDLED NETWORK ELEMENTS - South Carolina														Attachment: 2		Exhibit: A	
CATEGORY	RATE ELEMENTS	Interim	Zone	BCS	USOC	RATES ($)					Svc Order Submitted Elec per LSR	Svc Order Submitted Manually per LSR	Incremental Charge - Manual Svc Order vs. Electronic-1st	Incremental Charge - Manual Svc Order vs. Electronic-Add'l	Incremental Charge - Manual Svc Order vs. Electronic-Disc 1st	Incremental Charge - Manual Svc Order vs. Electronic-Disc Add'l
						Rec	Nonrecurring		Nonrecurring Disconnect		OSS Rates ($)					
							First	Add'l	First	Add'l	SOMEC	SOMAN	SOMAN	SOMAN	SOMAN	SOMAN
	INTEROFFICE TRANSPORT															
	Interoffice Transport - Dedicated - 2 Wire Voice Grade - Facility Termination			UEPPX	U1TV2	24.30	40.63	27.47	16.77	6.91						
	Interoffice Transport - Dedicated - 2 Wire Voice Grade - Per Mile or Fraction Mile			UEPPX	U1TVM	0.0167	0.00	0.00								
	2-WIRE VOICE GRADE LOOP WITH 2-WIRE ANALOG LINE COIN PORT															
	UNE Port/Loop Combination Rates															
	2-Wire VG Coin Port/Loop Combo – Zone 1		1			14.89										
	2-Wire VG Coin Port/Loop Combo – Zone 2		2			21.52										
	2-Wire VG Coin Port/Loop Combo – Zone 3		3			27.17										
	UNE Loop Rates															
	2-Wire Voice Grade Loop (SL1) - Zone 1		1	UEPCO	UEPLX	13.76										
	2-Wire Voice Grade Loop (SL1) - Zone 2		2	UEPCO	UEPLX	20.38										
	2-Wire Voice Grade Loop (SL1) - Zone 3		3	UEPCO	UEPLX	26.04										
	2-Wire Voice Grade Line Ports (COIN)															
	2-Wire Coin 2-Way without Operator Screening and without Blocking (SC)			UEPCO	UEPSD	1.13	40.30	19.90	24.98	6.65						
	2-Wire Coin 2-Way with Operator Screening and Blocking: 011, 900/976, 1+DDD (SC)			UEPCO	UEPSA	1.13	40.30	19.90	24.98	6.65						
	2-Wire Coin 2-Way with Operator Screening and 011 Blocking (SC)			UEPCO	UEPSH	1.13	40.30	19.90	24.98	6.65						
	2-Wire Coin 2-Way with Operator Screening and 011 Blocking; with Dialing Parity (SC)			UEPCO	UEPSC	1.13	40.30	19.90	24.98	6.65						
	2-Wire Coin 2-Way with Operator Screening and: 900 Blocking: 900/976, 1+DDD, 011+, and Local (SC)			UEPCO	UEPCC	1.13	40.30	19.90	24.98	6.65						
	2-Wire Coin 2-W Operator Screen: 900 Block: 900/976, 1+DDD, 011+, Local; Enhanced Call OPT 3YV (SC)			UEPCO	UEPCE	1.13	40.30	19.90	24.98	6.65						
	2-Wire Coin 2-W Operator Screen: 900 Block: 900/976, 1+DDD, 011+, Local; Enhanced Call OPT AP7 (SC)			UEPCO	UEPCF	1.13	40.30	19.90	24.98	6.65						
	2-Wire Coin Outward without Blocking and without Operator Screening (SC)			UEPCO	UEPSG	1.13	40.30	19.90	24.98	6.65						
	2-Wire Coin Outward with Operator Screening and 011 Blocking (SC)			UEPCO	UEPSF	1.13	40.30	19.90	24.98	6.65						
	2-Wire Coin Outward with Operator Screening and Blocking: 011, 900/976, 1+DDD (SC)			UEPCO	UEPSJ	1.13	40.30	19.90	24.98	6.65						
	2-Wire Coin Outward with Operator Screening and Blocking: 900/976, 1+DDD, 011+, and Local (SC)			UEPCO	UEPCM	1.13	40.30	19.90	24.98	6.65						
	2-Wire Coin Out Operator Screen & Block: 900/976, 1+DDD, 011+, Local; Enhanced Calling OPT 3YW (SC)			UEPCO	UEPCP	1.13	40.30	19.90	24.98	6.65						
	2-Wire 2-Way Smartline with 900/976 (all states except LA)			UEPCO	UEPCK	1.13	40.30	19.90	24.98	6.65						
	2-Wire Coin Outward Smartline with 900/976 (all states except LA)			UEPCO	UEPCR	1.13	40.30	19.90	24.98	6.65						
	ADDITIONAL UNE COIN PORT/LOOP (RC)															
	UNE Coin Port/Loop Combo Usage (Flat Rate)			UEPCO	URECU	4.05	0.00	0.00	0.00	0.00						
	LOCAL NUMBER PORTABILITY															
	Local Number Portability (1 per port)			UEPCO	LNPCX	0.35										
	NONRECURRING CHARGES - CURRENTLY COMBINED															
	2-Wire Voice Grade Loop / Line Port Combination - Conversion - Switch-as-is			UEPCO	USAC2		0.10	0.10								
	2-Wire Voice Grade Loop / Line Port Combination - Conversion - Switch with change			UEPCO	USACC		0.10	0.10								
	ADDITIONAL NRCs															
	2-Wire Voice Grade Loop/Line Port Combination - Subsequent Activity			UEPCO	USAS2		0.00	0.00								
	Unbundled Miscellaneous Rate Element, Tag Loop at End User Premise			UEPCO	URETL		8.33	0.83								
	2-WIRE VOICE LOOP/ 2WIRE VOICE GRADE IO TRANSPORT/ 2-WIRE LINE PORT (RES)															
	UNE Port/Loop Combination Rates															
	2-Wire VG Loop/IO Tranport/Port Combo - Zone 1		1			18.00										

UNBUNDLED NETWORK ELEMENTS - South Carolina														Attachment: 2		Exhibit: A	
CATEGORY	RATE ELEMENTS	Interim	Zone	BCS	USOC	RATES ($)					Svc Order Submitted Elec per LSR	Svc Order Submitted Manually per LSR	Incremental Charge - Manual Svc Order vs. Electronic-1st	Incremental Charge - Manual Svc Order vs. Electronic-Add'l	Incremental Charge - Manual Svc Order vs. Electronic-Disc 1st	Incremental Charge - Manual Svc Order vs. Electronic-Disc Add'l
						Rec	Nonrecurring		Nonrecurring Disconnect		OSS Rates ($)					
							First	Add'l	First	Add'l	SOMEC	SOMAN	SOMAN	SOMAN	SOMAN	SOMAN
	2-Wire VG Loop/IO Tranport/Port Combo - Zone 2		2			24.45										
	2-Wire VG Loop/IO Tranport/Port Combo - Zone 3		3			29.78										
UNE Loop Rates																
	2-Wire Voice Grade Loop (SL2) - Zone 1		1	UEPFR	UECF2	16.68										
	2-Wire Voice Grade Loop (SL2) - Zone 2		2	UEPFR	UECF2	23.13										
	2-Wire Voice Grade Loop (SL2) - Zone 3		3	UEPFR	UECF2	28.46										
2-Wire Voice Grade Line Port Rates (Res)																
	2-Wire voice unbundled port - residence			UEPFR	UEPRL	1.32	108.36	70.71	1.42	1.33						
	2-Wire voice unbundled port with Caller ID - res			UEPFR	UEPRC	1.32	108.36	70.71	1.42	1.33						
	2-Wire voice unbundled port outgoing only - res			UEPFR	UEPRO	1.32	108.36	70.71	1.42	1.33						
	2-Wire voice Grade unbundled South Carolina extended local dialing parity port with Caller ID - res			UEPFR	UEPAU	1.32	108.36	70.71	1.42	1.33						
	2-Wire voice unbundled South Carolina Area Calling port with Caller ID - res (LW8)			UEPFR	UEPAJ	1.32	108.36	70.71	1.42	1.33						
	2-Wire voice unbundles res, low usage line port with Caller ID (LUM)			UEPFR	UEPAP	1.32	108.36	70.71	1.42	1.33						
	2-Wire Voice Unbundled South Carolina Residence Dialing Plan without Caller ID			UEPFR	UEPWL	1.32	108.36	70.71	1.42	1.33						
INTEROFFICE TRANSPORT																
	Interoffice Transport - Dedicated - 2 Wire Voice Grade - Facility Termination			UEPFR	U1TV2	19.44	40.63	27.47	16.77	6.91						
	Interoffice Transport - Dedicated - 2 Wire Voice Grade - Per Mile or Fraction Mile			UEPFR	1L5XX	0.0134										
FEATURES						,										
	All Features Offered			UEPFR	UEPVF	3.04	0.00	0.00								
LOCAL NUMBER PORTABILITY																
	Local Number Portability (1 per port)			UEPFR	LNPCX	0.35										
NONRECURRING CHARGES (NRCs) - CURRENTLY COMBINED																
	2-Wire Loop / Dedicated IO Transport / 2 Wire Line Port Combination - Conversion - Switch-as-is			UEPFR	USAC2		8.50	1.87								
	2-Wire Loop / Dedicated IO Transport / 2 Wire Line Port Combination - Conversion - Switch-With-Change			UEPFR	USACC		8.50	1.87								
	Unbundled Miscellaneous Rate Element, Tag Designed Loop at End User Premise			UEPFR	URETN		11.24	1.10								
2-WIRE VOICE LOOP/ 2WIRE VOICE GRADE IO TRANSPORT/ 2-WIRE LINE PORT (BUS)																
UNE Port/Loop Combination Rates																
	2-Wire VG Loop/IO Tranport/Port Combo - Zone 1		1			18.00										
	2-Wire VG Loop/IO Tranport/Port Combo - Zone 2		2			24.45										
	2-Wire VG Loop/IO Tranport/Port Combo - Zone 3		3			29.78										
UNE Loop Rates																
	2-Wire Voice Grade Loop (SL2) - Zone 1		1	UEPFB	UECF2	16.68										
	2-Wire Voice Grade Loop (SL2) - Zone 2		2	UEPFB	UECF2	23.13										
	2-Wire Voice Grade Loop (SL2) - Zone 3		3	UEPFB	UECF2	28.46										
2-Wire Voice Grade Line Port (Bus)																
	2-Wire voice unbundled port without Caller ID - bus			UEPFB	UEPBL	1.32	108.36	70.71	1.42	1.33						
	2-Wire voice unbundled port with Caller + E484 ID - bus			UEPFB	UEPBC	1.32	108.36	70.71	1.42	1.33						
	2-Wire voice unbundled port outgoing only - bus			UEPFB	UEPBO	1.32	108.36	70.71	1.42	1.33						
	2-Wire voice Grade unbundled South Carolina extended local dialing parity port with Caller ID - bus			UEPFB	UEPAZ	1.32	108.36	70.71	1.42	1.33						
	2-Wire voice unbundled incoming only port with Caller ID - Bus			UEPFB	UEPB1	1.32	108.36	70.71	1.42	1.33						
	2-Wire voice unbundled South Carolina Bus Area Calling Port with Caller ID (LMB)			UEPFB	UEPAB	1.32	108.36	70.71	1.42	1.33						
	2-Wire Voice Unbundled South Carolina Business Dialing Plan without Caller ID			UEPFB	UEPWM	1.32	108.36	70.71	1.42	1.33						
LOCAL NUMBER PORTABILITY																
	Local Number Portability (1 per port)			UEPFB	LNPCX	0.35										
INTEROFFICE TRANSPORT																
	Interoffice Transport - Dedicated - 2 Wire Voice Grade - Facility Termination			UEPFB	U1TV2	19.44	40.63	27.47	16.77	6.91						

UNBUNDLED NETWORK ELEMENTS - South Carolina														Attachment: 2		Exhibit: A	
CATEGORY	RATE ELEMENTS	Interim	Zone	BCS	USOC	RATES ($)					Svc Order Submitted Elec per LSR	Svc Order Submitted Manually per LSR	Incremental Charge - Manual Svc Order vs. Electronic-1st	Incremental Charge - Manual Svc Order vs. Electronic-Add'l	Incremental Charge - Manual Svc Order vs. Electronic-Disc 1st	Incremental Charge - Manual Svc Order vs. Electronic-Disc Add'l
						Rec	Nonrecurring		Nonrecurring Disconnect		OSS Rates ($)					
							First	Add'l	First	Add'l	SOMEC	SOMAN	SOMAN	SOMAN	SOMAN	SOMAN
	Interoffice Transport - Dedicated - 2 Wire Voice Grade - Per Mile or Fraction Mile			UEPFB	1L5XX	0.0134										
FEATURES																
	All Features Offered			UEPFB	UEPVF	3.04	0.00	0.00								
NONRECURRING CHARGES (NRCs) - CURRENTLY COMBINED																
	2-Wire Loop / Dedicated IO Transport / 2 Wire Line Port Combination - Conversion - Switch-as-is			UEPFB	USAC2		8.50	1.87								
	2-Wire Loop / Dedicated IO Transport / 2 Wire Line Port Combination - Conversion - Switch with change			UEPFB	USACC		8.50	1.87								
	Unbundled Miscellaneous Rate Element, Tag Designed Loop at End User Premise			UEPFB	URETN		11.24	1.10								
2-WIRE VOICE LOOP/ 2WIRE VOICE GRADE IO TRANSPORT/ 2-WIRE LINE PORT (PBX)																
UNE Port/Loop Combination Rates																
	2-Wire VG Loop/IO Tranport/Port Combo - Zone 1		1			18.00										
	2-Wire VG Loop/IO Tranport/Port Combo - Zone 2		2			24.45										
	2-Wire VG Loop/IO Tranport/Port Combo - Zone 3		3			29.78										
UNE Loop Rates																
	2-Wire Voice Grade Loop (SL2) - Zone 1		1	UEPFP	UECF2	16.68										
	2-Wire Voice Grade Loop (SL2) - Zone 2		2	UEPFP	UECF2	23.13										
	2-Wire Voice Grade Loop (SL2) - Zone 3		3	UEPFP	UECF2	28.46										
2-Wire Voice Grade Line Port Rates (BUS - PBX)																
	Line Side Unbundled Combination 2-Way PBX Trunk Port - Bus			UEPFP	UEPPC	1.32	137.32	83.31	67.02	11.51						
	Line Side Unbundled Outward PBX Trunk Port - Bus			UEPFP	UEPPO	1.32	137.32	83.31	67.02	11.51						
	Line Side Unbundled Incoming PBX Trunk Port - Bus			UEPFP	UEPP1	1.32	137.32	83.31	67.02	11.51						
	2-Wire Voice Unbundled PBX LD Terminal Ports			UEPFP	UEPLD	1.32	137.32	83.31	67.02	11.51						
	2-Wire Voice Unbundled 2-Way Combination PBX Usage Port			UEPFP	UEPXA	1.32	137.32	83.31	67.02	11.51						
	2-Wire Voice Unbundled PBX Toll Terminal Hotel Ports			UEPFP	UEPXB	1.32	137.32	83.31	67.02	11.51						
	2-Wire Voice Unbundled PBX LD DDD Terminals Port			UEPFP	UEPXC	1.32	137.32	83.31	67.02	11.51						
	2-Wire Voice Unbundled PBX LD Terminal Switchboard Port			UEPFP	UEPXD	1.32	137.32	83.31	67.02	11.51						
	2-Wire Voice Unbundled PBX LD Terminal Switchboard IDD Capable Port			UEPFP	UEPXE	1.32	137.32	83.31	67.02	11.51						
	2-Wire Voice Unbundled 2-Way PBX Hotel/Hospital Economy Administrative Calling Port			UEPFP	UEPXL	1.32	137.32	83.31	67.02	11.51						
	2-Wire Voice Unbundled 2-Way PBX Hotel/Hospital Economy Room Calling Port			UEPFP	UEPXM	1.32	137.32	83.31	67.02	11.51						
	2-Wire Voice Unbundled 1-Way Outgoing PBX Hotel/Hospital Discount Room Calling Port			UEPFP	UEPXO	1.32	137.32	83.31	67.02	11.51						
	2-Wire Voice Unbundled 1-Way Outgoing PBX Measured Port			UEPFP	UEPXS	1.32	137.32	83.31	67.02	11.51						
	2-Wire Voice Unbundled 2-Way PBX South Carolina Area Plus Calling Port			UEPFP	UEPXT	1.32	137.32	83.31	67.02	11.51						
LOCAL NUMBER PORTABILITY																
	Local Number Portability (1 per port)			UEPFP	LNPCP	3.15	0.00	0.00								
INTEROFFICE TRANSPORT																
	Interoffice Transport - Dedicated - 2 Wire Voice Grade - Facility Termination			UEPFP	U1TV2	19.44	40.63	27.47	16.77	6.91						
	Interoffice Transport - Dedicated - 2 Wire Voice Grade - Per Mile or Fraction Mile			UEPFP	1L5XX	0.0134										
FEATURES																
	All Features Offered			UEPFP	UEPVF	3.04	0.00	0.00								
NONRECURRING CHARGES (NRCs) - CURRENTLY COMBINED																
	2-Wire Loop / Dedicated IO Transport / 2 Wire Line Port Combination - Conversion - Switch-as-is			UEPFP	USAC2		8.50	1.87								
	2-Wire Loop / Dedicated IO Transport / 2 Wire Line Port Combination - Conversion - Switch with change			UEPFP	USACC		8.50	1.87								
	Unbundled Miscellaneous Rate Element, Tag Designed Loop at End User Premise			UEPFP	URETN		11.24	1.10								
UNBUNDLED PORT/LOOP COMBINATIONS - COST BASED RATES																
2-WIRE VOICE GRADE LOOP- BUS ONLY - WITH 2-WIRE DID TRUNK PORT																

UNBUNDLED NETWORK ELEMENTS - South Carolina													Attachment: 2		Exhibit: A	
CATEGORY	RATE ELEMENTS	Interim	Zone	BCS	USOC	RATES ($)					Svc Order Submitted Elec per LSR	Svc Order Submitted Manually per LSR	Incremental Charge - Manual Svc Order vs. Electronic-1st	Incremental Charge - Manual Svc Order vs. Electronic-Add'l	Incremental Charge - Manual Svc Order vs. Electronic-Disc 1st	Incremental Charge - Manual Svc Order vs. Electronic-Disc Add'l
						Rec	Nonrecurring		Nonrecurring Disconnect		OSS Rates ($)					
							First	Add'l	First	Add'l	SOMEC	SOMAN	SOMAN	SOMAN	SOMAN	SOMAN
UNE Port/Loop Combination Rates																
	2-Wire VG Loop/2-Wire DID Trunk Port Combo - UNE Zone 1		1			23.75										
	2-Wire VG Loop/2-Wire DID Trunk Port Combo - UNE Zone 2		2			30.20										
	2-Wire VG Loop/2-Wire DID Trunk Port Combo - UNE Zone 3		3			35.52										
UNE Loop Rates																
	2-Wire Analog Voice Grade Loop - (SL2) - UNE Zone 1		1	UEPPX	UECD1	16.68										
	2-Wire Analog Voice Grade Loop - (SL2) - UNE Zone 2		2	UEPPX	UECD1	23.13										
	2-Wire Analog Voice Grade Loop - (SL2) - UNE Zone 3		3	UEPPX	UECD1	28.46										
UNE Port Rate																
	Exchange Ports - 2-Wire DID Port			UEPPX	UEPD1	7.06	225.55	87.21	113.08	14.38						
NONRECURRING CHARGES - CURRENTLY COMBINED																
	2-Wire Voice Grade Loop / 2-Wire DID Trunk Port Combination - Switch-as-is			UEPPX	USAC1		7.32	1.87								
	2-Wire Voice Grade Loop / 2-Wire DID Trunk Port Conversion with BellSouth Allowable Changes			UEPPX	USA1C		7.32	1.87								
ADDITIONAL NRCs																
	2-Wire DID Subsequent Activity - Add Trunks, Per Trunk			UEPPX	USAS1		26.84									
	Unbundled Miscellaneous Rate Element, Tag Designed Loop at End User Premise			UEPPX	URETN		11.24	1.10								
Telephone Number/Trunk Group Establisment Charges																
	DID Trunk Termination (One Per Port)			UEPPX	NDT	0.00	0.00	0.00								
	DID Numbers, Establish Trunk Group and Provide First Group of 20 DID Numbers			UEPPX	NDZ	0.00	0.00	0.00								
	Additional DID Numbers for each Group of 20 DID Numbers			UEPPX	ND4	0.00	0.00	0.00								
	DID Numbers, Non- consecutive DID Numbers , Per Number			UEPPX	ND5	0.00	0.00	0.00								
	Reserve Non-Consecutive DID numbers			UEPPX	ND6	0.00	0.00	0.00								
	Reserve DID Numbers			UEPPX	NDV	0.00	0.00	0.00								
LOCAL NUMBER PORTABILITY																
	Local Number Portability (1 per port)			UEPPX	LNPCP	3.15	0.00	0.00								
2-WIRE ISDN DIGITAL GRADE LOOP WITH 2-WIRE ISDN DIGITAL LINE SIDE PORT																
UNE Port/Loop Combination Rates																
	2W ISDN Digital Grade Loop/2W ISDN Digital Line Side Port - UNE Zone 1		1	UEPPB UEPPR		30.86										
	2W ISDN Digital Grade Loop/2W ISDN Digital Line Side Port - UNE Zone 2		2	UEPPB UEPPR		38.60										
	2W ISDN Digital Grade Loop/2W ISDN Digital Line Side Port - UNE Zone 3		3	UEPPB UEPPR		44.23										
UNE Loop Rates																
	2-Wire ISDN Digital Grade Loop - UNE Zone 1		1	UEPPB UEPPR	USL2X	21.90										
	2-Wire ISDN Digital Grade Loop - UNE Zone 2		2	UEPPB UEPPR	USL2X	29.64										
	2-Wire ISDN Digital Grade Loop - UNE Zone 3		3	UEPPB UEPPR	USL2X	35.27										
UNE Port Rate																
	Exchange Port - 2-Wire ISDN Line Side Port			UEPPB UEPPR	UEPPB	8.96	190.51	133.14	100.95	21.37						
NONRECURRING CHARGES - CURRENTLY COMBINED																
	2-Wire ISDN Digital Grade Loop / 2-Wire ISDN Line Side Port Combination - Conversion			UEPPB UEPPR	USACB	0.00	38.59	27.08								
ADDITIONAL NRCs																
	Unbundled Miscellaneous Rate Element, Tag Designed Loop at End User Premise			UEPPB UEPPR	URETN		11.24	1.10								
	Unbundled Miscellaneous Rate Element, Tag Loop at End User Premise			UEPPB UEPPR	URETL		8.33	0.83								
LOCAL NUMBER PORTABILITY																
	Local Number Portability (1 per port)			UEPPB UEPPR	LNPCX	0.35	0.00	0.00								
B-CHANNEL USER PROFILE ACCESS:																
	CVS/CSD (DMS/5ESS)			UEPPB UEPPR	U1UCA	0.00	0.00	0.00								
	CVS (EWSD)			UEPPB UEPPR	U1UCB	0.00	0.00	0.00								
	CSD			UEPPB UEPPR	U1UCC	0.00	0.00	0.00								
B-CHANNEL AREA PLUS USER PROFILE ACCESS: (AL,KY,LA,MS SC,MS, & TN)																

UNBUNDLED NETWORK ELEMENTS - South Carolina														Attachment: 2		Exhibit: A	
CATEGORY	RATE ELEMENTS	Interim	Zone	BCS	USOC	RATES ($)					Svc Order Submitted Elec per LSR	Svc Order Submitted Manually per LSR	Incremental Charge - Manual Svc Order vs. Electronic-1st	Incremental Charge - Manual Svc Order vs. Electronic-Add'l	Incremental Charge - Manual Svc Order vs. Electronic-Disc 1st	Incremental Charge - Manual Svc Order vs. Electronic-Disc Add'l
						Rec	Nonrecurring		Nonrecurring Disconnect		OSS Rates ($)					
							First	Add'l	First	Add'l	SOMEC	SOMAN	SOMAN	SOMAN	SOMAN	SOMAN
	CVS/CSD (DMS/5ESS)			UEPPB UEPPR	U1UCD	0.00	0.00	0.00								
	CVS (EWSD)			UEPPB UEPPR	U1UCE	0.00	0.00	0.00								
	CSD			UEPPB UEPPR	U1UCF	0.00	0.00	0.00								
USER TERMINAL PROFILE																
	User Terminal Profile (EWSD only)			UEPPB UEPPR	U1UMA	0.00	0.00	0.00								
VERTICAL FEATURES																
	All Vertical Features - One per Channel B User Profile			UEPPB UEPPR	UEPVF	3.04	0.00	0.00								
INTEROFFICE CHANNEL MILEAGE																
	Interoffice Channel mileage each, including first mile and facilities termination			UEPPB UEPPR	M1GNC	24.30	40.63	27.47	16.77	6.91						
	Interoffice Channel mileage each, additional mile			UEPPB UEPPR	M1GNM	0.0167	0.00	0.00								
4-WIRE DS1 DIGITAL LOOP WITH 4-WIRE ISDN DS1 DIGITAL TRUNK PORT																
The UNE-P DS1 combination rates below for in this rate exhibit apply to the embedded base in place as of 10/2/03 until 4/1/04. After 4/1/04 these rates shall revert to tariff rates or a separate commercial agreement.																
Requests for 4-Wire DS1 Digital Loop with 4-Wire ISDN DS1 Digital Trunk Port after the effective date of this amendment shall be provided pursuant to a separate agreement or tariff at BellSouth's discretion.																
UNE Port/Loop Combination Rates																
	4W DS1 Digital Loop/4W ISDN DS1 Digital Trunk Port - UNE Zone 1		1	UEPPP		176.82										
	4W DS1 Digital Loop/4W ISDN DS1 Digital Trunk Port - UNE Zone 2		2	UEPPP		241.38										
	4W DS1 Digital Loop/4W ISDN DS1 Digital Trunk Port - UNE Zone 3		3	UEPPP		347.84										
UNE Loop Rates																
	4-Wire DS1 Digital Loop - UNE Zone 1		1	UEPPP	USL4P	90.87										
	4-Wire DS1 Digital Loop - UNE Zone 2		2	UEPPP	USL4P	155.43										
	4-Wire DS1 Digital Loop - UNE Zone 3		3	UEPPP	USL4P	261.89										
UNE Port Rate																
	Exchange Ports - 4-Wire ISDN DS1 Port (E:4/1/2004)			UEPPP	UEPPP	85.95	457.30	259.67	124.15	31.83						
NONRECURRING CHARGES - CURRENTLY COMBINED																
	4-Wire DS1 Digital Loop / 4-Wire ISDN DS1 Digital Trunk Port Combination - Conversion -Switch-as-is (E:4/1/2004)			UEPPP	USACP	0.00	119.34	78.73								
ADDITIONAL NRCs																
	4-Wire DS1 Loop/4-W ISDN Digtl Trk Port - Subsqt Actvy-Inward/two way Tel Nos. (except NC)			UEPPP	PR7TF		0.49	0.49								
	4-Wire DS1 Loop / 4-Wire ISDN DS1 Digital Trunk Port - Outward Tel Numbers (All States except NC)			UEPPP	PR7TO		11.54	11.54								
	4-Wire DS1 Loop / 4-Wire ISDN DS1 Digital Trk Port - Subsequent Inward Tel Numbers			UEPPP	PR7ZT		23.07	23.07								
LOCAL NUMBER PORTABILITY																
	Local Number Portability (1 per port)			UEPPP	LNPCN	1.75										
	Voice/Data			UEPPP	PR71V	0.00	0.00	0.00								
	Digital Data			UEPPP	PR71D	0.00	0.00	0.00								
	Inward Data			UEPPP	PR71E	0.00	0.00	0.00								
New or Additional "B" Channel																
	New or Additional - Voice/Data B Channel			UEPPP	PR7BV	0.00	14.56									
	New or Additional - Digital Data B Channel			UEPPP	PR7BF	0.00	14.56									
	New or Additional Inward Data B Channel			UEPPP	PR7BD	0.00	14.56									
CALL TYPES																
	Inward			UEPPP	PR7C1	0.00	0.00	0.00								
	Outward			UEPPP	PR7CO	0.00	0.00	0.00								
	Two-way			UEPPP	PR7CC	0.00	0.00	0.00								
Interoffice Channel Mileage																
	Fixed Each Including First Mile			UEPPP	1LN1A	77.4815	89.47	81.99	16.39	14.48						
	Each Airline-Fractional Additional Mile			UEPPP	1LN1B	0.3415										
4-WIRE DS1 DIGITAL LOOP WITH 4-WIRE DDITS TRUNK PORT																
The UNE-P DS1 combination rates below for in this rate exhibit apply to the embedded base in place as of 10/2/03 until 4/1/04. After 4/1/04 these rates shall revert to tariff rates or a separate commercial agreement.																
Requests for 4-Wire DS1 Digital Loop with 4-Wire DDITS after the effective date of this amendment shall be provided pursuant to a separate agreement or tariff at BellSouth's discretion.																
UNE Port/Loop Combination Rates																
	4W DS1 Digital Loop/4W DDITS Trunk Port - UNE Zone 1		1	UEPDC		149.77										
	4W DS1 Digital Loop/4W DDITS Trunk Port - UNE Zone 2		2	UEPDC		214.33										

UNBUNDLED NETWORK ELEMENTS - South Carolina														Attachment: 2		Exhibit: A	
CATEGORY	RATE ELEMENTS	Interim	Zone	BCS	USOC	RATES ($)					Svc Order Submitted Elec per LSR	Svc Order Submitted Manually per LSR	Incremental Charge - Manual Svc Order vs. Electronic-1st	Incremental Charge - Manual Svc Order vs. Electronic-Add'l	Incremental Charge - Manual Svc Order vs. Electronic-Disc 1st	Incremental Charge - Manual Svc Order vs. Electronic-Disc Add'l
						Rec	Nonrecurring		Nonrecurring Disconnect		OSS Rates ($)					
							First	Add'l	First	Add'l	SOMEC	SOMAN	SOMAN	SOMAN	SOMAN	SOMAN
	4W DS1 Digital Loop/4W DDITS Trunk Port - UNE Zone 3		3	UEPDC		320.78										
UNE Loop Rates																
	4-Wire DS1 Digital Loop - UNE Zone 1		1	UEPDC	USLDC	90.87										
	4-Wire DS1 Digital Loop - UNE Zone 2		2	UEPDC	USLDC	155.43										
	4-Wire DS1 Digital Loop - UNE Zone 3		3	UEPDC	USLDC	261.89										
UNE Port Rate																
	4-Wire DDITS Digital Trunk Port (E:4/1/2004)			UEPDC	UDD1T	58.90	455.50	253.79	117.55	14.20						
NONRECURRING CHARGES - CURRENTLY COMBINED																
	4-Wire DS1 Digital Loop / 4-Wire DDITS Trunk Port Combination - Switch-as-is (E:4/1/2004)			UEPDC	USAC4		129.78	67.17								
	4-Wire DS1 Digital Loop / 4-Wire DDITS Trunk Port Combination - Conversion with DS1 Changes (E:4/1/2004)			UEPDC	USAWA		129.78	67.17								
	4-Wire DS1 Digital Loop / 4-Wire DDITS Trunk Port Combination - Conversion with Change - Trunk (E:4/1/2004)			UEPDC	USAWB		129.78	67.17								
ADDITIONAL NRCs																
	4-Wire DS1 Loop / 4-Wire DDITS Trunk Port - NRC - Subsequent Channel Activation/Chan - 2-Way Trunk			UEPDC	UDTTA		14.51	14.51								
	4-Wire DS1 Loop / 4-Wire DDITS Trunk Port - Subsequent Channel Activation/Chan - 1-Way Outward Trunk			UEPDC	UDTTB		14.51	14.51								
	4-Wire DS1 Loop / 4-Wire DDITS Trunk Port - Subsqnt Channel Activation/Chan Inward Trunk w/out DID			UEPDC	UDTTC		14.51	14.51								
	4-Wire DS1 Loop / 4-Wire DDITS Trunk Port - Subsqnt Chan Activation Per Chan - Inward Trunk with DID			UEPDC	UDTTD		14.51	14.51								
	4-Wire DS1 Loop / 4-Wire DDITS Trunk Port - Subsqnt Chan Activation / Chan - 2-Way DID w User Trans			UEPDC	UDTTE		14.51	14.51								
BIPOLAR 8 ZERO SUBSTITUTION																
	B8ZS -Superframe Format			UEPDC	CCOSF		0.00i	605.00s								
	B8ZS - Extended Superframe Format			UEPDC	CCOEF		0.00i	605.00s								
Alternate Mark Inversion																
	AMI -Superframe Format			UEPDC	MCOSF		0.00	0.00								
	AMI - Extended SuperFrame Format			UEPDC	MCOPO		0.00	0.00								
Telephone Number/Trunk Group Establisment Charges																
	Telephone Number for 2-Way Trunk Group			UEPDC	UDTGX	0.00										
	Telephone Number for 1-Way Outward Trunk Group			UEPDC	UDTGY	0.00										
	Telephone Number for 1-Way Inward Trunk Group Without DID			UEPDC	UDTGZ	0.00										
	DID Numbers, Establish Trunk Group and Provide First Group of 20 DID Numbers			UEPDC	NDZ	0.00	0.00	0.00								
	DID Numbers for each Group of 20 DID Numbers			UEPDC	ND4	0.00										
	DID Numbers, Non- consecutive DID Numbers , Per Number			UEPDC	ND5	0.00	0.00	0.00								
	Reserve Non-Consecutive DID Nos.			UEPDC	ND6	0.00	0.00	0.00								
	Reserve DID Numbers			UEPDC	NDV	0.00	0.00	0.00								
Dedicated DS1 (Interoffice Channel Mileage) - FX/FCO for 4-Wire DS1 Digital Loop with 4-Wire DDITS Trunk Port																
	Interoffice Channel Mileage - Fixed rate 0-8 miles (Facilities Termination)			UEPDC	1LNO1	77.14	89.47	81.99	16.39	14.48						
	Interoffice Channel Mileage - Additional rate per mile - 0-8 miles			UEPDC	1LNOA	0.3415	0.00	0.00								
	Interoffice Channel Mileage - Fixed rate 9-25 miles (Facilities Termination)			UEPDC	1LNO2	0.00	0.00	0.00								
	Interoffice Channel Mileage - Additional rate per mile - 9-25 miles			UEPDC	1LNOB	0.3415	0.00	0.00								
	Interoffice Channel Mileage - Fixed rate 25+ miles (Facilities Termination)			UEPDC	1LNO3	0.00	0.00	0.00								
	Interoffice Channel Mileage - Additional rate per mile - 25+ miles			UEPDC	1LNOC	0.3415	0.00	0.00								
	Local Number Portability, per DS0 Activated			UEPDC	LNPCP	3.15	0.00	0.00								
	Central Office Termininating Point			UEPDC	CTG	0.00										
4-WIRE DS1 LOOP WITH CHANNELIZATION WITH PORT																
System is 1 DS1 Loop, 1 D4 Channel Bank, and up to 24 Feature Activations																
Each System can have up to 24 combinations of rates depending on type and number of ports used																

UNBUNDLED NETWORK ELEMENTS - South Carolina													Attachment: 2		Exhibit: A	
CATEGORY	RATE ELEMENTS	Interim	Zone	BCS	USOC	RATES ($)					Svc Order Submitted Elec per LSR	Svc Order Submitted Manually per LSR	Incremental Charge - Manual Svc Order vs. Electronic-1st	Incremental Charge - Manual Svc Order vs. Electronic-Add'l	Incremental Charge - Manual Svc Order vs. Electronic-Disc 1st	Incremental Charge - Manual Svc Order vs. Electronic-Disc Add'l
						Rec	Nonrecurring		Nonrecurring Disconnect		OSS Rates ($)					
							First	Add'l	First	Add'l	SOMEC	SOMAN	SOMAN	SOMAN	SOMAN	SOMAN
	The UNE-P DS1 combination rates below for 4-Wire DS1 Loop with Channelization with Port in this rate exhibit apply to the embedded base in place as of 10/2/03 until 4/1/04. After 4/1/04 these rates shall revert to tariff rates or a separate agreement.															
	Requests for 4-Wire DS1 Loop with Channelization with Port after the effective date of this amendment shall be provided pursuant to a separate agreement or tariff at BellSouth's discretion.															
	UNE DS1 Loop															
	4-Wire DS1 Loop - UNE Zone 1		1	UEPMG	USLDC	90.87	0.00	0.00								
	4-Wire DS1 Loop - UNE Zone 2		2	UEPMG	USLDC	155.43	0.00	0.00								
	4-Wire DS1 Loop - UNE Zone 3		3	UEPMG	USLDC	261.89	0.00	0.00								
	UNE DSO Channelization Capacities (D4 Channel Bank Configurations)															
	24 DSO Channel Capacity - 1 per DS1			UEPMG	VUM24	82.78	0.00	0.00								
	48 DSO Channel Capacity - 1 per 2 DS1s			UEPMG	VUM48	165.56	0.00	0.00								
	96 DSO Channel Capacity -1per 4 DS1s			UEPMG	VUM96	331.12	0.00	0.00								
	144 DS0 Channel Capacity - 1 per 6 DS1s			UEPMG	VUM14	496.68	0.00	0.00								
	192 DS0 Channel Capacity -1 per 8 DS1s			UEPMG	VUM19	662.24	0.00	0.00								
	240 DS0 Channel Capacity - 1 per 10 DS1s			UEPMG	VUM2O	827.80	0.00	0.00								
	288 DS0 Channel Capacity - 1 per 12 DS1s			UEPMG	VUM28	993.36	0.00	0.00								
	384 DS0 Channel Capacity - 1 per 16 DS1s			UEPMG	VUM38	1,324.48	0.00	0.00								
	480 DS0 Channel Capacity - 1 per 20 DS1s			UEPMG	VUM4O	1,655.60	0.00	0.00								
	576 DS0 Channel Capacity -1 per 24 DS1s			UEPMG	VUM57	1,986.72	0.00	0.00								
	672 DS0 Channel Capacity - 1 per 28 DS1s			UEPMG	VUM67	2,317.84	0.00	0.00								
	Non-Recurring Charges (NRC) Associated with 4-Wire DS1 Loop with Channeliztion with Port - Conversion Charge Based on a System															
	A Minimum System configuration is One (1) DS1, One (1) D4 Channel Bank, and Up To 24 DSO Ports with Feature Activations.															
	Multiples of this configuration functioning as one are considered Add'l after the minimum system configuration is counted.															
	NRC - Conversion (Currently Combined) with or without BellSouth Allowed Changes			UEPMG	USAC4	0.00	150.81	8.38								
	System Additions at End User Locations Where 4-Wire DS1 Loop with Channelization with Port Combination Currently Exists and															
	New (Not Currently Combined) in all states, except in Density Zone 1 of Top 8 MSA's															
	1 DS1/D4 Channel Bank - Additionally Add NRC for each Port and Assoc Fea Activation (E:4/1/2004)			UEPMG	VUMD4	0.00	717.71	425.81	149.08	17.69						
	Bipolar 8 Zero Substitution															
	Clear Channel Capability Format, superframe - Subsequent Activity Only			UEPMG	CCOSF	0.00	0.00i	605.00s								
	Clear Channel Capability Format - Extended Superframe - Subsequent Activity Only			UEPMG	CCOEF	0.00	0.00i	605.00s								
	Alternate Mark Inversion (AMI)															
	Superframe Format			UEPMG	MCOSF	0.00	0.00	0.00								
	Extended Superframe Format			UEPMG	MCOPO	0.00	0.00	0.00								
	Exchange Ports Associated with 4-Wire DS1 Loop with Channelization with Port															
	Exchange Ports															
	Line Side Combination Channelized PBX Trunk Port - Business (E:4/1/2004)			UEPPX	UEPCX	1.13	0.00	0.00	0.00	0.00						
	Line Side Outward Channelized PBX Trunk Port - Business (E:4/1/2004)			UEPPX	UEPOX	1.13	0.00	0.00	0.00	0.00						
	Line Side Inward Only Channelized PBX Trunk Port without DID (E:4/1/2004)			UEPPX	UEP1X	1.13	0.00	0.00	0.00	0.00						
	2-Wire Trunk Side Unbundled Channelized DID Trunk Port (E:4/1/2004)			UEPPX	UEPDM	7.09	0.00	0.00	0.00	0.00						
	Feature Activations - Unbundled Loop Concentration															
	Feature (Service) Activation for each Line Port Terminated in D4 Bank			UEPPX	1PQWM	0.56	25.45	13.44	4.20	4.17						
	Feature (Service) Activation for each Trunk Port Terminated in D4 Bank			UEPPX	1PQWU	0.56	78.31	18.46	59.37	11.60						
	Telephone Number/ Group Establishment Charges for DID Service															
	DID Trunk Termination (1 per Port)			UEPPX	NDT	0.00	0.00	0.00								
	Estab Trk Grp and Provide 1st 20 DID Nos. (FL,GA, NC,& SC)			UEPPX	NDZ	0.00	0.00	0.00								
	DID Numbers - groups of 20 - Valid all States			UEPPX	ND4	0.00	0.00	0.00								
	Non-Consecutive DID Numbers - per number			UEPPX	ND5	0.00	0.00	0.00								
	Reserve Non-Consecutive DID Numbers			UEPPX	ND6	0.00	0.00	0.00								
	Reserve DID Numbers			UEPPX	NDV	0.00	0.00	0.00								
	Local Number Portability															
	Local Number Portability - 1 per port			UEPPX	LNPCP	3.15	0.00	0.00								

UNBUNDLED NETWORK ELEMENTS - South Carolina													Attachment: 2		Exhibit: A	
CATEGORY	RATE ELEMENTS	Interim	Zone	BCS	USOC	RATES ($)					Svc Order Submitted Elec per LSR	Svc Order Submitted Manually per LSR	Incremental Charge - Manual Svc Order vs. Electronic-1st	Incremental Charge - Manual Svc Order vs. Electronic-Add'l	Incremental Charge - Manual Svc Order vs. Electronic-Disc 1st	Incremental Charge - Manual Svc Order vs. Electronic-Disc Add'l
						Rec	Nonrecurring		Nonrecurring Disconnect		OSS Rates ($)					
							First	Add'l	First	Add'l	SOMEC	SOMAN	SOMAN	SOMAN	SOMAN	SOMAN
	FEATURES - Vertical and Optional															
	Local Switching Features Offered with Line Side Ports Only															
	All Features Available			UEPPX	UEPVF	3.04	0.00	0.00								
UNBUNDLED CENTREX PORT/LOOP COMBINATIONS - COST BASED RATES																
	1. Cost Based Rates are applied where BellSouth is required by FCC and/or State Commission rule to provide Unbundled Local Switching or Switch Ports.															
	2. Features shall apply to the Unbundled Port/Loop Combination - Cost Based Rate section in the same manner as they are applied to the Stand-Alone Unbundled Port section of this Rate Exhibit.															
	3. End Office and Tandem Switching Usage and Common Transport Usage rates in the Port section of this rate exhibit shall apply to all combinations of loop/port network elements except for UNE Coin Port/Loop Combinations.															
	4. The first and additional Port nonrecurring charges apply to Not Currently Combined Combos. For Currently Combined Combos, the nonrecurring charges shall be those identified in the Nonrecurring - Currently Combined sections. Additional NRCs may apply also and are categorized accordingly.															
	5. Market Rates for Unbundled Centrex Port/Loop Combination will be negotiated on an Individual Case Basis, until further notice.															
	UNE-P CENTREX - 5ESS (Valid in All States)															
	2-Wire VG Loop/2-Wire Voice Grade Port (Centrex) Combo															
	UNE Port/Loop Combination Rates (Non-Design)															
	2-Wire VG Loop/2-Wire Voice Grade Port (Centrex) Port Combo - Non-Design		1	UEP95		14.89										
	2-Wire VG Loop/2-Wire Voice Grade Port (Centrex)Port Combo - Non-Design		2	UEP95		21.52										
	2-Wire VG Loop/2-Wire Voice Grade Port (Centrex)Port Combo - Non-Design		3	UEP95		27.17										
	UNE Port/Loop Combination Rates (Design)															
	2-Wire VG Loop/2-Wire Voice Grade Port (Centrex) Port Combo - Design		1	UEP95		17.81										
	2-Wire VG Loop/2-Wire Voice Grade Port (Centrex)Port Combo - Design		2	UEP95		24.26										
	2-Wire VG Loop/2-Wire Voice Grade Port (Centrex)Port Combo - Design		3	UEP95		29.59										
	UNE Loop Rate															
	2-Wire Voice Grade Loop (SL 1) - Zone 1		1	UEP95	UECS1	13.76										
	2-Wire Voice Grade Loop (SL 1) - Zone 2		2	UEP95	UECS1	20.38										
	2-Wire Voice Grade Loop (SL 1) - Zone 3		3	UEP95	UECS1	26.04										
	2-Wire Voice Grade Loop (SL 2) - Zone 1		1	UEP95	UECS2	16.68										
	2-Wire Voice Grade Loop (SL 2) - Zone 2		2	UEP95	UECS2	23.13										
	2-Wire Voice Grade Loop (SL 2) - Zone 3		3	UEP95	UECS2	28.46										
	UNE Port Rate															
	All States															
	2-Wire Voice Grade Port (Centrex) Basic Local Area			UEP95	UEPYA	1.13	40.30	19.90	24.98	6.65						
	2-Wire Voice Grade Port (Centrex 800 termination)			UEP95	UEPYB	1.13	40.30	19.90	24.98	6.65						
	2-Wire Voice Grade Port (Centrex with Caller ID)1Basic Local Area			UEP95	UEPYH	1.13	40.30	19.90	24.98	6.65						
	2-Wire Voice Grade Port (Centrex from diff Serving Wire Center)2,3 Basic Local Area			UEP95	UEPYM	1.13	108.36	70.71	54.47	11.94						
	2-Wire Voice Grade Port, Diff Serving Wire Center 2,3 - 800 Service Term - Basic Local Area			UEP95	UEPYZ	1.13	108.36	70.71	54.47	11.94						
	2-Wire Voice Grade Port terminated in on Megalink or equivalent - Basic Local Area			UEP95	UEPY9	1.13	40.30	19.90	24.98	6.65						
	2-Wire Voice Grade Port Terminated on 800 Service Term - Basic Local Area			UEP95	UEPY2	1.13	40.30	19.90	24.98	6.65						
	AL, KY, LA, MS, SC, & TN Only															
	2-Wire Voice Grade Port (Centrex)			UEP95	UEPQA	1.13	40.30	19.90	24.98	6.65						
	2-Wire Voice Grade Port (Centrex 800 termination)			UEP95	UEPQB	1.13	40.30	19.90	24.98	6.65						
	2-Wire Voice Grade Port (Centrex with Caller ID)1			UEP95	UEPQH	1.13	40.30	19.90	24.98	6.65						
	2-Wire Voice Grade Port (Centrex from diff Serving Wire Center)2,3			UEP95	UEPQM	1.13	108.36	70.71	54.47	11.94						
	2-Wire Voice Grade Port, Diff Serving Wire Center - 800 Service Term 2,3			UEP95	UEPQZ	1.13	108.36	70.71	54.47	11.94						
	2-Wire Voice Grade Port terminated in on Megalink or equivalent			UEP95	UEPQ9	1.13	40.30	19.90	24.98	6.65						
	2-Wire Voice Grade Port Terminated on 800 Service Term			UEP95	UEPQ2	1.13	40.30	19.90	24.98	6.65						
	Local Switching															

UNBUNDLED NETWORK ELEMENTS - South Carolina														Attachment: 2		Exhibit: A	
CATEGORY	RATE ELEMENTS	Interim	Zone	BCS	USOC	RATES ($)					Svc Order Submitted Elec per LSR	Svc Order Submitted Manually per LSR	Incremental Charge - Manual Svc Order vs. Electronic-1st	Incremental Charge - Manual Svc Order vs. Electronic-Add'l	Incremental Charge - Manual Svc Order vs. Electronic-Disc 1st	Incremental Charge - Manual Svc Order vs. Electronic-Disc Add'l
						Rec	Nonrecurring		Nonrecurring Disconnect		OSS Rates ($)					
							First	Add'l	First	Add'l	SOMEC	SOMAN	SOMAN	SOMAN	SOMAN	SOMAN
	Centrex Intercom Funtionality, per port			UEP95	URECS	0.7996										
Local Number Portability																
	Local Number Portability (1 per port)			UEP95	LNPCC	0.35										
Features																
	All Standard Features Offered, per port			UEP95	UEPVF	3.04										
	All Select Features Offered, per port			UEP95	UEPVS	0.00	406.42									
	All Centrex Control Features Offered, per port			UEP95	UEPVC	3.04										
NARS																
	Unbundled Network Access Register - Combination			UEP95	UARCX	0.00	0.00	0.00	0.00	0.00						
	Unbundled Network Access Register - Indial			UEP95	UAR1X	0.00	0.00	0.00	0.00	0.00						
	Unbundled Network Access Register - Outdial			UEP95	UAROX	0.00	0.00	0.00	0.00	0.00						
Miscellaneous Terminations																
2-Wire Trunk Side																
	Trunk Side Terminations, each			UEP95	CEND6	8.86	119.57	18.78	60.03	3.77						
4-Wire Digital (1.544 Megabits)																
	DS1 Circuit Terminations, each			UEP95	M1HD1	73.62	202.47	95.90	72.75	2.47						
	DS0 Channels Activated, each			UEP95	M1HDO	0.00	14.51									
Interoffice Channel Mileage - 2-Wire																
	Interoffice Channel Facilities Termination			UEP95	M1GBC	24.30	40.63	27.47	16.77	6.91						
	Interoffice Channel mileage, per mile or fraction of mile			UEP95	M1GBM	0.0167										
Feature Activations (DS0) Centrex Loops on Channelized DS1 Service																
D4 Channel Bank Feature Activations																
	Feature Activation on D-4 Channel Bank Centrex Loop Slot			UEP95	1PQWS	0.56										
	Feature Activation on D-4 Channel Bank FX line Side Loop Slot			UEP95	1PQW6	0.56										
	Feature Activation on D-4 Channel Bank FX Trunk Side Loop Slot			UEP95	1PQW7	0.56										
	Feature Activation on D-4 Channel Bank Centrex Loop Slot - Different Wire Center			UEP95	1PQWP	0.56										
	Feature Activation on D-4 Channel Bank Private Line Loop Slot			UEP95	1PQWV	0.56										
	Feature Activation on D-4 Channel Bank Tjie Line/Trunk Loop Slot			UEP95	1PQWQ	0.56										
	Feature Activation on D-4 Channel Bank WATS Loop Slot			UEP95	1PQWA	0.56										
Non-Recurring Charges (NRC) Associated with UNE-P Centrex																
	NRC Conversion Currently Combined Switch-As-Is with allowed changes, per port			UEP95	USAC2		37.93	16.72								
	New Centrex Standard Common Block			UEP95	M1ACS	0.00	668.70									
	New Centrex Customized Common Block			UEP95	M1ACC	0.00	668.70									
	NAR Establishment Charge, Per Occasion			UEP95	URECA	0.00	72.89									
Additional Non-Recurring Charges (NRC)																
	Unbundled Miscellaneous Rate Element, Tag Loop at End Use Premise			UEP95	URETL		8.33	0.83								
	Unbundled Miscellaneous Rate Element, Tag Design Loop at End Use Premise			UEP95	URETN		11.24	1.10								
UNE-P CENTREX - DMS100 (Valid in All States)																
2-Wire VG Loop/2-Wire Voice Grade Port (Centrex) Combo																
UNE Port/Loop Combination Rates (Non-Design)																
	2-Wire VG Loop/2-Wire Voice Grade Port (Centrex) Port Combo - Non-Design		1	UEP9D		14.89										
	2-Wire VG Loop/2-Wire Voice Grade Port (Centrex)Port Combo - Non-Design		2	UEP9D		21.52										
	2-Wire VG Loop/2-Wire Voice Grade Port (Centrex)Port Combo - Non-Design		3	UEP9D		27.17										
UNE Port/Loop Combination Rates (Design)																
	2-Wire VG Loop/2-Wire Voice Grade Port (Centrex) Port Combo - Design		1	UEP9D		17.81										
	2-Wire VG Loop/2-Wire Voice Grade Port (Centrex)Port Combo - Design		2	UEP9D		24.26										

UNBUNDLED NETWORK ELEMENTS - South Carolina														Attachment: 2		Exhibit: A	
CATEGORY		RATE ELEMENTS	Interim	Zone	BCS	USOC	RATES ($)					Svc Order Submitted Elec per LSR	Svc Order Submitted Manually per LSR	Incremental Charge - Manual Svc Order vs. Electronic-1st	Incremental Charge - Manual Svc Order vs. Electronic-Add'l	Incremental Charge - Manual Svc Order vs. Electronic-Disc 1st	Incremental Charge - Manual Svc Order vs. Electronic-Disc Add'l
							Rec	Nonrecurring		Nonrecurring Disconnect		OSS Rates ($)					
								First	Add'l	First	Add'l	SOMEC	SOMAN	SOMAN	SOMAN	SOMAN	SOMAN
		2-Wire VG Loop/2-Wire Voice Grade Port (Centrex)Port Combo - Design		3	UEP9D		29.59										
	UNE Loop Rate																
		2-Wire Voice Grade Loop (SL 1) - Zone 1		1	UEP9D	UECS1	13.76										
		2-Wire Voice Grade Loop (SL 1) - Zone 2		2	UEP9D	UECS1	20.38										
		2-Wire Voice Grade Loop (SL 1) - Zone 3		3	UEP9D	UECS1	26.04										
		2-Wire Voice Grade Loop (SL 2) - Zone 1		1	UEP9D	UECS2	16.68										
		2-Wire Voice Grade Loop (SL 2) - Zone 2		2	UEP9D	UECS2	23.13										
		2-Wire Voice Grade Loop (SL 2) - Zone 3		3	UEP9D	UECS2	28.46										
	UNE Port Rate																
	ALL STATES																
		2-Wire Voice Grade Port (Centrex) Basic Local Area			UEP9D	UEPYA	1.13	40.30	19.90	24.98	6.65						
		2-Wire Voice Grade Port (Centrex 800 termination)Basic Local Area			UEP9D	UEPYB	1.13	40.30	19.90	24.98	6.65						
		2-Wire Voice Grade Port (Centrex / EBS-PSET)3Basic Local Area			UEP9D	UEPYC	1.13	40.30	19.90	24.98	6.65						
		2-Wire Voice Grade Port (Centrex / EBS-M5009)3Basic Local Area			UEP9D	UEPYD	1.13	40.30	19.90	24.98	6.65						
		2-Wire Voice Grade Port (Centrex / EBS-M5209))3 Basic Local Area			UEP9D	UEPYE	1.13	40.30	19.90	24.98	6.65						
		2-Wire Voice Grade Port (Centrex / EBS-M5112))3 Basic Local Area			UEP9D	UEPYF	1.13	40.30	19.90	24.98	6.65						
		2-Wire Voice Grade Port (Centrex / EBS-M5312))3Basic Local Area			UEP9D	UEPYG	1.13	40.30	19.90	24.98	6.65						
		2-Wire Voice Grade Port (Centrex / EBS-M5008))3 Basic Local Area			UEP9D	UEPYT	1.13	40.30	19.90	24.98	6.65						
		2-Wire Voice Grade Port (Centrex / EBS-M5208))3 Basic Local Area			UEP9D	UEPYU	1.13	40.30	19.90	24.98	6.65						
		2-Wire Voice Grade Port (Centrex / EBS-M5216))3 Basic Local Area			UEP9D	UEPYV	1.13	40.30	19.90	24.98	6.65						
		2-Wire Voice Grade Port (Centrex / EBS-M5316))3 Basic Local Area			UEP9D	UEPY3	1.13	40.30	19.90	24.98	6.65						
		2-Wire Voice Grade Port (Centrex with Caller ID) Basic Local Area			UEP9D	UEPYH	1.13	40.30	19.90	24.98	6.65						
		2-Wire Voice Grade Port (Centrex/Caller ID/Msg Wtg Lamp Indication))4 Basic Local Area			UEP9D	UEPYW	1.13	40.30	19.90	24.98	6.65						
		2-Wire Voice Grade Port (Centrex/Msg Wtg Lamp Indication))4 Basic Local Area			UEP9D	UEPYJ	1.13	40.30	19.90	24.98	6.65						
		2-Wire Voice Grade Port (Centrex from diff Serving Wire Center) 2,3-Basic Local Area			UEP9D	UEPYM	1.13	108.36	70.71	54.47	11.94						
		2-Wire Voice Grade Port (Centrex/differ SWC /EBS-PSET)2,3,4 Basic Local Area			UEP9D	UEPYO	1.13	108.36	70.71	54.47	11.94						
		2-Wire Voice Grade Port (Centrex/differ SWC /EBS-M5009)2,3,4 Basic Local Area			UEP9D	UEPYP	1.13	108.36	70.71	54.47	11.94						
		2-Wire Voice Grade Port (Centrex/differ SWC /EBS-5209)2,3,4 Basic Local Area			UEP9D	UEPYQ	1.13	108.36	70.71	54.47	11.94						
		2-Wire Voice Grade Port (Centrex/differ SWC /EBS-M5112)2,3,4 Basic Local Area			UEP9D	UEPYR	1.13	108.36	70.71	54.47	11.94						
		2-Wire Voice Grade Port (Centrex/differ SWC /EBS-M5312)2,3,4 Basic Local Area			UEP9D	UEPYS	1.13	108.36	70.71	54.47	11.94						
		2-Wire Voice Grade Port (Centrex/differ SWC /EBS-M5008)2,3,4 Basic Local Area			UEP9D	UEPY4	1.13	108.36	70.71	54.47	11.94						
		2-Wire Voice Grade Port (Centrex/differ SWC /EBS-M5208)2, 3 Basic Local Area			UEP9D	UEPY5	1.13	108.36	70.71	54.47	11.94						
		2-Wire Voice Grade Port (Centrex/differ SWC /EBS-M5216)2,3,4 Basic Local Area			UEP9D	UEPY6	1.13	108.36	70.71	54.47	11.94						
		2-Wire Voice Grade Port (Centrex/differ SWC /EBS-M5316)2,3,4 Basic Local Area			UEP9D	UEPY7	1.13	108.36	70.71	54.47	11.94						

UNBUNDLED NETWORK ELEMENTS - South Carolina														Attachment: 2		Exhibit: A	
CATEGORY		RATE ELEMENTS	Interim	Zone	BCS	USOC	RATES ($)					Svc Order Submitted Elec per LSR	Svc Order Submitted Manually per LSR	Incremental Charge - Manual Svc Order vs. Electronic-1st	Incremental Charge - Manual Svc Order vs. Electronic-Add'l	Incremental Charge - Manual Svc Order vs. Electronic-Disc 1st	Incremental Charge - Manual Svc Order vs. Electronic-Disc Add'l
							Rec	Nonrecurring		Nonrecurring Disconnect		OSS Rates ($)					
								First	Add'l	First	Add'l	SOMEC	SOMAN	SOMAN	SOMAN	SOMAN	SOMAN
		2-Wire Voice Grade Port, Diff Serving Wire Center - 800 Service Term 2,3			UEP9D	UEPYZ	1.13	108.36	70.71	54.47	11.94						
		2-Wire Voice Grade Port terminated in on Megalink or equivalent Basic Local Area			UEP9D	UEPY9	1.13	40.30	19.90	24.98	6.65						
		2-Wire Voice Grade Port Terminated on 800 Service Term Basic Local Area			UEP9D	UEPY2	1.13	40.30	19.90	24.98	6.65						
	AL, KY, LA, MS, SC, & TN Only																
		2-Wire Voice Grade Port (Centrex)			UEP9D	UEPQA	1.13	40.30	19.90	24.98	6.65						
		2-Wire Voice Grade Port (Centrex 800 termination)			UEP9D	UEPQB	1.13	40.30	19.90	24.98	6.65						
		2-Wire Voice Grade Port (Centrex / EBS-PSET)4			UEP9D	UEPQC	1.13	40.30	19.90	24.98	6.65						
		2-Wire Voice Grade Port (Centrex / EBS-M5009)4			UEP9D	UEPQD	1.13	40.30	19.90	24.98	6.65						
		2-Wire Voice Grade Port (Centrex / EBS-M5209)4			UEP9D	UEPQE	1.13	40.30	19.90	24.98	6.65						
		2-Wire Voice Grade Port (Centrex / EBS-M5112)4			UEP9D	UEPQF	1.13	40.30	19.90	24.98	6.65						
		2-Wire Voice Grade Port (Centrex / EBS-M5312)4			UEP9D	UEPQG	1.13	40.30	19.90	24.98	6.65						
		2-Wire Voice Grade Port (Centrex / EBS-M5008)4			UEP9D	UEPQT	1.13	40.30	19.90	24.98	6.65						
		2-Wire Voice Grade Port (Centrex / EBS-M5208)4			UEP9D	UEPQU	1.13	40.30	19.90	24.98	6.65						
		2-Wire Voice Grade Port (Centrex / EBS-M5216)4			UEP9D	UEPQV	1.13	40.30	19.90	24.98	6.65						
		2-Wire Voice Grade Port (Centrex / EBS-M5316)4			UEP9D	UEPQ3	1.13	40.30	19.90	24.98	6.65						
		2-Wire Voice Grade Port (Centrex with Caller ID)			UEP9D	UEPQH	1.13	40.30	19.90	24.98	6.65						
		2-Wire Voice Grade Port (Centrex/Caller ID/Msg Wtg Lamp Indication)4			UEP9D	UEPQW	1.13	40.30	19.90	24.98	6.65						
		2-Wire Voice Grade Port (Centrex/Msg Wtg Lamp Indication)4			UEP9D	UEPQJ	1.13	40.30	19.90	24.98	6.65						
		2-Wire Voice Grade Port (Centrex from diff Serving Wire Center) 2,3			UEP9D	UEPQM	1.13	108.36	70.71	54.47	11.94						
		2-Wire Voice Grade Port (Centrex/differ SWC /EBS-PSET)2,3,4			UEP9D	UEPQO	1.13	108.36	70.71	54.47	11.94						
		2-Wire Voice Grade Port (Centrex/differ SWC /EBS-M5009)2,3,4			UEP9D	UEPQP	1.13	108.36	70.71	54.47	11.94						
		2-Wire Voice Grade Port (Centrex/differ SWC /EBS-5209)2,3,4			UEP9D	UEPQQ	1.13	108.36	70.71	54.47	11.94						
		2-Wire Voice Grade Port (Centrex/differ SWC /EBS-M5112)2,3,4			UEP9D	UEPQR	1.13	108.36	70.71	54.47	11.94						
		2-Wire Voice Grade Port (Centrex/differ SWC /EBS-M5312)2,3,4			UEP9D	UEPQS	1.13	108.36	70.71	54.47	11.94						
		2-Wire Voice Grade Port (Centrex/differ SWC /EBS-M5008)2,3,4			UEP9D	UEPQ4	1.13	108.36	70.71	54.47	11.94						
		2-Wire Voice Grade Port (Centrex/differ SWC /EBS-M5208)2,3,4			UEP9D	UEPQ5	1.13	108.36	70.71	54.47	11.94						
		2-Wire Voice Grade Port (Centrex/differ SWC /EBS-M5216)2,3,4			UEP9D	UEPQ6	1.13	108.36	70.71	54.47	11.94						
		2-Wire Voice Grade Port (Centrex/differ SWC /EBS-M5316)2,3,4			UEP9D	UEPQ7	1.13	108.36	70.71	54.47	11.94						
		2-Wire Voice Grade Port, Diff Serving Wire Center - 800 Service Term 2,3			UEP9D	UEPQZ	1.13	108.36	70.71	54.47	11.94						
		2-Wire Voice Grade Port terminated in on Megalink or equivalent			UEP9D	UEPQ9	1.13	40.30	19.90	24.98	6.65						
		2-Wire Voice Grade Port Terminated on 800 Service Term			UEP9D	UEPQ2	1.13	40.30	19.90	24.98	6.65						
	Local Switching																
		Centrex Intercom Funtionality, per port			UEP9D	URECS	0.7996										
	Local Number Portability																
		Local Number Portability (1 per port)			UEP9D	LNPCC	0.35										
	Features																
		All Standard Features Offered, per port			UEP9D	UEPVF	3.04										
		All Select Features Offered, per port			UEP9D	UEPVS	0.00	406.42									
		All Centrex Control Features Offered, per port			UEP9D	UEPVC	3.04										
	NARS																
		Unbundled Network Access Register - Combination			UEP9D	UARCX	0.00	0.00	0.00	0.00	0.00						
		Unbundled Network Access Register - Inward			UEP9D	UAR1X	0.00	0.00	0.00	0.00	0.00						
		Unbundled Network Access Register - Outdial			UEP9D	UAROX	0.00	0.00	0.00	0.00	0.00						

UNBUNDLED NETWORK ELEMENTS - South Carolina														Attachment: 2		Exhibit: A	
CATEGORY	RATE ELEMENTS	Interim	Zone	BCS	USOC	RATES ($)					Svc Order Submitted Elec per LSR	Svc Order Submitted Manually per LSR	Incremental Charge - Manual Svc Order vs. Electronic-1st	Incremental Charge - Manual Svc Order vs. Electronic-Add'l	Incremental Charge - Manual Svc Order vs. Electronic-Disc 1st	Incremental Charge - Manual Svc Order vs. Electronic-Disc Add'l
						Rec	Nonrecurring		Nonrecurring Disconnect		OSS Rates ($)					
							First	Add'l	First	Add'l	SOMEC	SOMAN	SOMAN	SOMAN	SOMAN	SOMAN
	Miscellaneous Terminations															
	2-Wire Trunk Side															
	Trunk Side Terminations, each			UEP9D	CEND6	8.86	119.57	18.78	60.03	3.77						
	4-Wire Digital (1.544 Megabits)															
	DS1 Circuit Terminations, each			UEP9D	M1HD1	73.62	202.47	95.90	72.75	2.47						
	DS0 Channels Activiated per Channel			UEP9D	M1HDO	0.00	14.51									
	Interoffice Channel Mileage - 2-Wire															
	Interoffice Channel Facilities Termination			UEP9D	M1GBC	24.30	40.63	27.47	16.77	6.91						
	Interoffice Channel mileage, per mile or fraction of mile			UEP9D	M1GBM	0.0167										
	Feature Activations (DS0) Centrex Loops on Channelized DS1 Service															
	D4 Channel Bank Feature Activations															
	Feature Activation on D-4 Channel Bank Centrex Loop Slot			UEP9D	1PQWS	0.56										
	Feature Activation on D-4 Channel Bank FX line Side Loop Slot			UEP9D	1PQW6	0.56										
	Feature Activation on D-4 Channel Bank FX Trunk Side Loop Slot			UEP9D	1PQW7	0.56										
	Feature Activation on D-4 Channel Bank Centrex Loop Slot - Different Wire Center			UEP9D	1PQWP	0.56										
	Feature Activation on D-4 Channel Bank Private Line Loop Slot			UEP9D	1PQWV	0.56										
	Feature Activation on D-4 Channel Bank Tjie Line/Trunk Loop Slot			UEP9D	1PQWQ	0.56										
	Feature Activation on D-4 Channel Bank WATS Loop Slot			UEP9D	1PQWA	0.56										
	Non-Recurring Charges (NRC) Associated with UNE-P Centrex															
	NRC Conversion Currently Combined Switch-As-Is with allowed changes, per port			UEP9D	USAC2		37.93	16.72								
	New Centrex Standard Common Block			UEP9D	M1ACS	0.00	668.70									
	New Centrex Customized Common Block			UEP9D	M1ACC	0.00	668.70									
	NAR Establishment Charge, Per Occasion			UEP9D	URECA	0.00	72.89									
	Additional Non-Recurring Charges (NRC)															
	Unbundled Miscellaneous Rate Element, Tag Loop at End Use Premise			UEP9D	URETL		8.33	0.83								
	Unbundled Miscellaneous Rate Element, Tag Design Loop at End Use Premise			UEP9D	URETN		11.24	1.10								
	Note 1 - Required Port for Centrex Control in 1AESS, 5ESS & EWSD															
	Note 2 - Requres Interoffice Channel Mileage															
	Note 3 - Installation is combination of Installation charge for SL2 Loop and Port															
	Note 4 - Requires Specific Customer Premises Equipment															
	Note: Rates displaying an "R" in Interim column are interim and subject to rate true-up as set forth in General Terms and Conditions.															

UNBUNDLED NETWORK ELEMENTS - Tennessee														Attachment: 2		Exhibit: A	
CATEGORY	RATE ELEMENTS	Interim	Zone	BCS	USOC	RATES ($)					Svc Order Submitted Elec per LSR	Svc Order Submitted Manually per LSR	Incremental Charge - Manual Svc Order vs. Electronic-1st	Incremental Charge - Manual Svc Order vs. Electronic-Add'l	Incremental Charge - Manual Svc Order vs. Electronic-Disc 1st	Incremental Charge - Manual Svc Order vs. Electronic-Disc Add'l
						Rec	Nonrecurring		Nonrecurring Disconnect		OSS Rates ($)					
							First	Add'l	First	Add'l	SOMEC	SOMAN	SOMAN	SOMAN	SOMAN	SOMAN
	The "Zone" shown in the sections for stand-alone loops or loops as part of a combination refers to Geographically Deaveraged UNE Zones. To view Geographically Deaveraged UNE Zone Designations by Central Office, refer to internet Website: http://www.interconnection.bellsouth.com/become_a_clec/html/interconnection.htm															
OPERATIONAL SUPPORT SYSTEMS (OSS) - "REGIONAL RATES"																
	NOTE: (1) CLEC should contact its contract negotiator if it prefers the "state specific" OSS charges as ordered by the State Commissions. The OSS charges currently contained in this rate exhibit are the BellSouth "regional" service ordering charges. CLEC may elect either the state specific Commission ordered rates for the service ordering charges, or CLEC may elect the regional service ordering charge, however, CLEC can not obtain a mixture of the two regardless if CLEC has a interconnection contract established in each of the 9 states.															
	NOTE: (2) Any element that can be ordered electronically will be billed according to the SOMEC rate listed in this category. Please refer to BellSouth's Local Ordering Handbook (LOH) to determine if a product can be ordered electronically. For those elements that cannot be ordered electronically at present per the LOH, the listed SOMEC rate in this category reflects the charge that would be billed to a CLEC once electronic ordering capabilities come on-line for that element. Otherwise, the manual ordering charge, SOMAN, will be applied to a CLECs bill when it submits an LSR to BellSouth.															
	NOTE: (3) OSS - Manual Service Order Charge, Per Element - UNE Only **Please see applicable rate element for SOMAN charge**															
	OSS - Electronic Service Order Charge, Per Local Service Request (LSR) - UNE Only				SOMEC		3.50	0.00	3.50	0.00						
UNE SERVICE DATE ADVANCEMENT CHARGE																
	NOTE: The Expedite charge will be maintained commensurate with BellSouth's FCC No.1 Tariff, Section 5 as applicable.															
	UNE Expedite Charge per Circuit or Line Assignable USOC, per Day			UAL, UEANL, UCL, UEF, UDF, UEQ, UDL, UENTW, UDN, UEA, UHL, ULC, USL, U1T12, U1T48, U1TD1, U1TD3, U1TDX, U1TO3, U1TS1, U1TVX, UC1BC, UC1BL, UC1CC, UC1CL, UC1DC, UC1DL, UC1EC, UC1EL, UC1FC, UC1FL, UC1GC, UC1GL, UC1HC, UC1HL, UDL12, UDL48, UDLO3, UDLSX, UE3, ULD12, ULD48, ULDD1, ULDD3, ULDDX, ULDO3, ULDS1, ULDVX, UNC1X, UNC3X, UNCDX, UNCNX, UNCSX, UNCVX, UNLD1, UNLD3, UXTD1, UXTD3, UXTS1, U1TUC, U1TUD, U1TUB, U1TUA	SDASP		200.00									
UNBUNDLED EXCHANGE ACCESS LOOP																
	2-WIRE ANALOG VOICE GRADE LOOP															
	2-Wire Analog Voice Grade Loop - Service Level 1- Zone 1		1	UEANL	UEAL2	13.19	31.99	20.02	10.65	1.41			20.35	10.54	13.32	13.32
	2-Wire Analog Voice Grade Loop - Service Level 1- Zone 2		2	UEANL	UEAL2	17.23	31.99	20.02	10.65	1.41			20.35	10.54	13.32	13.32
	2-Wire Analog Voice Grade Loop - Service Level 1- Zone 3		3	UEANL	UEAL2	22.53	31.99	20.02	10.65	1.41			20.35	10.54	13.32	13.32
	2-Wire Analog Voice Grade Loop - Service Level 1- Zone 1		1	UEANL	UEASL	13.19	31.99	20.02	10.65	1.41			20.35	10.54	13.32	13.32
	2-Wire Analog Voice Grade Loop - Service Level 1- Zone 2		2	UEANL	UEASL	17.23	31.99	20.02	10.65	1.41			20.35	10.54	13.32	13.32
	2-Wire Analog Voice Grade Loop - Service Level 1- Zone 3		3	UEANL	UEASL	22.53	31.99	20.02	10.65	1.41			20.35	10.54	13.32	13.32
	Unbundled Miscellaneous Rate Element, Tag Loop at End User Premise			UEANL	URETL		8.33	0.83					20.35	10.54	13.32	13.32
	Loop Testing - Basic 1st Half Hour			UEANL	URET1		78.92	78.92					20.35	10.54	13.32	13.32
	Loop Testing - Basic Additional Half Hour			UEANL	URETA		23.33	23.33					20.35	10.54	13.32	13.32
	CLEC to CLEC Conversion Charge Without Outside Dispatch (UVL-SL1)			UEANL	UREWO		15.80	8.95					20.35	10.54	13.32	13.32

UNBUNDLED NETWORK ELEMENTS - Tennessee														Attachment: 2		Exhibit: A	
CATEGORY	RATE ELEMENTS	Interim	Zone	BCS	USOC	RATES ($)					Svc Order Submitted Elec per LSR	Svc Order Submitted Manually per LSR	Incremental Charge - Manual Svc Order vs. Electronic-1st	Incremental Charge - Manual Svc Order vs. Electronic-Add'l	Incremental Charge - Manual Svc Order vs. Electronic-Disc 1st	Incremental Charge - Manual Svc Order vs. Electronic-Disc Add'l
						Rec	Nonrecurring		Nonrecurring Disconnect		OSS Rates ($)					
							First	Add'l	First	Add'l	SOMEC	SOMAN	SOMAN	SOMAN	SOMAN	SOMAN
	Unbundled Voice Loop, Non-Design Voice Loop, billing for BST providing make-up (Engineering Information - E.I.)			UEANL	UEANM		28.80	28.80								
	Manual Order Coordination for UVL-SL1s (per loop)			UEANL	UEAMC		36.52	36.52								
	Order Coordination for Specified Conversion Time for UVL-SL1 (per LSR)			UEANL	OCOSL		34.29	34.29								
2-WIRE Unbundled COPPER LOOP																
	2-Wire Unbundled Copper Loop - Non-Designed Zone 1	I	1	UEQ	UEQ2X	13.19	31.99	20.02	10.65	1.41			20.35	10.54	13.32	13.32
	2 Wire Unbundled Copper Loop - Non-Designed - Zone 2	I	2	UEQ	UEQ2X	17.23	31.99	20.02	10.65	1.41			20.35	10.54	13.32	13.32
	2 Wire Unbundled Copper Loop - Non-Designed - Zone 3	I	3	UEQ	UEQ2X	22.53	31.99	20.02	10.65	1.41			20.35	10.54	13.32	13.32
	Unbundled Miscellaneous Rate Element, Tag Loop at End User Premise			UEQ	URETL		8.33	0.83					20.35	10.54	13.32	13.32
	Manual Order Coordination 2 Wire Unbundled Copper Loop - Non-Designed (per loop)			UEQ	USBMC		36.52	36.52								
	Unbundled Copper Loop, Non-Design Copper Loop, billing for BST providing make-up (Engineering Information - E.I.)			UEQ	UEQMU		28.80	28.80					20.35	10.54	13.32	13.32
	Loop Testing - Basic 1st Half Hour			UEQ	URET1		78.92	78.92					20.35	10.54	13.32	13.32
	Loop Testing - Basic Additional Half Hour			UEQ	URETA		23.33	23.33					20.35	10.54	13.32	13.32
	CLEC to CLEC Conversion Charge Without Outside Dispatch (UCL-ND)			UEQ	UREWO		14.29	7.44					20.35	10.54	13.32	13.32
UNBUNDLED EXCHANGE ACCESS LOOP																
2-WIRE ANALOG VOICE GRADE LOOP																
	2 Wire Analog Voice Grade Loop-Service Level 1-Line Splitting-Zone 1		1	UEPSR UEPSB	UEALS	13.19	31.99	20.02	10.65	1.41			20.35	10.54	13.32	13.32
	2 Wire Analog Voice Grade Loop-Service Level 1-Line Splitting-Zone 1		1	UEPSR UEPSB	UEABS	13.19	31.99	20.02	10.65	1.41			20.35	10.54	13.32	13.32
	2 Wire Analog Voice Grade Loop- Service Level 1-Line Splitting-Zone 2		2	UEPSR UEPSB	UEALS	17.23	31.99	20.02	10.65	1.41			20.35	10.54	13.32	13.32
	2 Wire Analog Voice Grade Loop- Service Level 1-Line Splitting-Zone 2		2	UEPSR UEPSB	UEABS	17.23	31.99	20.02	10.65	1.41			20.35	10.54	13.32	13.32
	2 Wire Analog Voice Grade Loop-Service Level 1-Line Splitting-Zone 3		3	UEPSR UEPSB	UEALS	22.53	31.99	20.02	10.65	1.41			20.35	10.54	13.32	13.32
	2 Wire Analog Voice Grade Loop-Service Level 1-Line Splitting-Zone 3		3	UEPSR UEPSB	UEABS	22.53	31.99	20.02	10.65	1.41			20.35	10.54	13.32	13.32
UNBUNDLED EXCHANGE ACCESS LOOP																
2-WIRE ANALOG VOICE GRADE LOOP																
	2-Wire Analog Voice Grade Loop - Service Level 2 w/Loop or Ground Start Signaling - Zone 1		1	UEA	UEAL2	16.56	75.06	48.20	28.70	17.64			20.35	10.54	13.32	13.32
	2-Wire Analog Voice Grade Loop - Service Level 2 w/Loop or Ground Start Signaling - Zone 2		2	UEA	UEAL2	21.63	75.06	48.20	28.70	17.64			20.35	10.54	13.32	13.32
	2-Wire Analog Voice Grade Loop - Service Level 2 w/Loop or Ground Start Signaling - Zone 3		3	UEA	UEAL2	28.28	75.06	48.20	28.70	17.64			20.35	10.54	13.32	13.32
	Order Coordination for Specified Conversion Time (per LSR)			UEA	OCOSL		34.29									
	2-Wire Analog Voice Grade Loop - Service Level 2 w/Reverse Battery Signaling - Zone 1		1	UEA	UEAR2	16.56	75.06	48.20	28.70	17.64			20.35	10.54	13.32	13.32
	2-Wire Analog Voice Grade Loop - Service Level 2 w/Reverse Battery Signaling - Zone 2		2	UEA	UEAR2	21.63	75.06	48.20	28.70	17.64			20.35	10.54	13.32	13.32
	2-Wire Analog Voice Grade Loop - Service Level 2 w/Reverse Battery Signaling - Zone 3		3	UEA	UEAR2	28.28	75.06	48.20	28.70	17.64			20.35	10.54	13.32	13.32
	Order Coordination for Specified Conversion Time (per LSR)			UEA	OCOSL		34.29									
	CLEC to CLEC Conversion Charge without outside dispatch			UEA	UREWO		75.06	36.41					20.35	10.54	13.32	13.32
	Loop Tagging - Service Level 2 (SL2)			UEA	URETL		11.23	1.10					20.35	10.54	13.32	13.32
4-WIRE ANALOG VOICE GRADE LOOP																
	4-Wire Analog Voice Grade Loop - Zone 1		1	UEA	UEAL4	24.70	122.76	85.57	76.35	39.16			20.35	10.54	13.32	13.32
	4-Wire Analog Voice Grade Loop - Zone 2		2	UEA	UEAL4	32.25	122.76	85.57	76.35	39.16			20.35	10.54	13.32	13.32
	4-Wire Analog Voice Grade Loop - Zone 3		3	UEA	UEAL4	42.17	122.76	85.57	76.35	39.16			20.35	10.54	13.32	13.32
	Order Coordination for Specified Conversion Time (per LSR)			UEA	OCOSL		34.29									
	CLEC to CLEC Conversion Charge without outside dispatch			UEA	UREWO		75.06	36.41					20.35	10.54	13.32	13.32
2-WIRE ISDN DIGITAL GRADE LOOP																
	2-Wire ISDN Digital Grade Loop - Zone 1		1	UDN	U1L2X	22.22	142.76	88.88	76.35	39.16			20.35	10.54	13.32	13.32

UNBUNDLED NETWORK ELEMENTS - Tennessee														Attachment: 2		Exhibit: A	
CATEGORY	RATE ELEMENTS	Interim	Zone	BCS	USOC	RATES ($)					Svc Order Submitted Elec per LSR	Svc Order Submitted Manually per LSR	Incremental Charge - Manual Svc Order vs. Electronic-1st	Incremental Charge - Manual Svc Order vs. Electronic-Add'l	Incremental Charge - Manual Svc Order vs. Electronic-Disc 1st	Incremental Charge - Manual Svc Order vs. Electronic-Disc Add'l
						Rec	Nonrecurring		Nonrecurring Disconnect		OSS Rates ($)					
							First	Add'l	First	Add'l	SOMEC	SOMAN	SOMAN	SOMAN	SOMAN	SOMAN
	2-Wire ISDN Digital Grade Loop - Zone 2		2	UDN	U1L2X	29.02	142.76	88.88	76.35	39.16			20.35	10.54	13.32	13.32
	2-Wire ISDN Digital Grade Loop - Zone 3		3	UDN	U1L2X	37.95	142.76	88.88	76.35	39.16			20.35	10.54	13.32	13.32
	Order Coordination For Specified Conversion Time (per LSR)			UDN	OCOSL		34.29									
	CLEC to CLEC Conversion Charge without outside dispatch			UDN	UREWO		91.77	44.22					20.35	10.54	13.32	13.32
2-WIRE ASYMMETRICAL DIGITAL SUBSCRIBER LINE (ADSL) COMPATIBLE LOOP																
	2 Wire Unbundled ADSL Loop including manual service inquiry & facility reservation - Zone 1		1	UAL	UAL2X	13.82	270.01	234.63	74.54	39.14			20.35	10.54	13.32	13.32
	2 Wire Unbundled ADSL Loop including manual service inquiry & facility reservation - Zone 2		2	UAL	UAL2X	18.05	270.01	234.63	74.54	39.14			20.35	10.54	13.32	13.32
	2 Wire Unbundled ADSL Loop including manual service inquiry & facility reservation - Zone 3		3	UAL	UAL2X	23.60	270.01	234.63	74.54	39.14			20.35	10.54	13.32	13.32
	Order Coordination for Specified Conversion Time (per LSR)			UAL	OCOSL		34.29									
	2 Wire Unbundled ADSL Loop without manual service inquiry & facility reservaton - Zone 1	I	1	UAL	UAL2W	13.82	31.99	20.02	10.65	1.41			20.35	10.54	13.32	13.32
	2 Wire Unbundled ADSL Loop without manual service inquiry & facility reservaton - Zone 2	I	2	UAL	UAL2W	18.05	31.99	20.02	10.65	1.41			20.35	10.54	13.32	13.32
	2 Wire Unbundled ADSL Loop without manual service inquiry & facility reservaton - Zone 3	I	3	UAL	UAL2W	23.60	31.99	20.02	10.65	1.41			20.35	10.54	13.32	13.32
	Order Coordination for Specified Conversion Time (per LSR)			UAL	OCOSL		34.29									
	CLEC to CLEC Conversion Charge without outside dispatch	I		UAL	UREWO		31.99	20.02					20.35	10.54	13.32	13.32
2-WIRE HIGH BIT RATE DIGITAL SUBSCRIBER LINE (HDSL) COMPATIBLE LOOP																
	2 Wire Unbundled HDSL Loop including manual service inquiry & facility reservation - Zone 1		1	UHL	UHL2X	10.83	270.01	234.63	74.54	39.14			20.35	10.54	13.32	13.32
	2 Wire Unbundled HDSL Loop including manual service inquiry & facility reservation - Zone 2		2	UHL	UHL2X	14.15	270.01	234.63	74.54	39.14			20.35	10.54	13.32	13.32
	2 Wire Unbundled HDSL Loop including manual service inquiry & facility reservation - Zone 3		3	UHL	UHL2X	18.50	270.01	234.63	74.54	39.14			20.35	10.54	13.32	13.32
	Order Coordination for Specified Conversion Time (per LSR)			UHL	OCOSL		34.29									
	2 Wire Unbundled HDSL Loop without manual service inquiry and facility reservation - Zone 1	I	1	UHL	UHL2W	10.83	31.99	20.02	10.65	1.41			20.35	10.54	13.32	13.32
	2 Wire Unbundled HDSL Loop without manual service inquiry and facility reservation - Zone 2	I	2	UHL	UHL2W	14.15	31.99	20.02	10.65	1.41			20.35	10.54	13.32	13.32
	2 Wire Unbundled HDSL Loop without manual service inquiry and facility reservation - Zone 3	I	3	UHL	UHL2W	18.50	31.99	20.02	10.65	1.41			20.35	10.54	13.32	13.32
	Order Coordination for Specified Conversion Time (per LSR)			UHL	OCOSL		34.29									
	CLEC to CLEC Conversion Charge without outside dispatch	I		UHL	UREWO		31.99	20.02					20.35	10.54	13.32	13.32
4-WIRE HIGH BIT RATE DIGITAL SUBSCRIBER LINE (HDSL) COMPATIBLE LOOP																
	4 Wire Unbundled HDSL Loop including manual service inquiry and facility reservation - Zone 1		1	UHL	UHL4X	13.93	279.60	244.22	74.54	39.14			20.35	10.54	13.32	13.32
	4-Wire Unbundled HDSL Loop including manual service inquiry and facility reservation - Zone 2		2	UHL	UHL4X	18.20	279.60	244.22	74.54	39.14			20.35	10.54	13.32	13.32
	4-Wire Unbundled HDSL Loop including manual service inquiry and facility reservation - Zone 3		3	UHL	UHL4X	23.80	279.60	244.22	74.54	39.14			20.35	10.54	13.32	13.32
	Order Coordination for Specified Conversion Time (per LSR)			UHL	OCOSL		34.29									
	4-Wire Unbundled HDSL Loop without manual service inquiry and facility reservation - Zone 1	I	1	UHL	UHL4W	13.93	31.99	20.02	10.65	1.41			20.35	10.54	13.32	13.32
	4-Wire Unbundled HDSL Loop without manual service inquiry and facility reservation - Zone 2	I	2	UHL	UHL4W	18.20	31.99	20.02	10.65	1.41			20.35	10.54	13.32	13.32
	4-Wire Unbundled HDSL Loop without manual service inquiry and facility reservation - Zone 3	I	3	UHL	UHL4W	23.80	31.99	20.02	10.65	1.41			20.35	10.54	13.32	13.32
	Order Coordination for Specified Conversion Time (per LSR)			UHL	OCOSL		34.29									
	CLEC to CLEC Conversion Charge without outside dispatch	I		UHL	UREWO		31.99	20.02					20.35	10.54	13.32	13.32
4-WIRE DS1 DIGITAL LOOP																
	4-Wire DS1 Digital Loop - Zone 1		1	USL	USLXX	57.73	313.08	219.72	96.86	40.45			18.98	8.43	11.95	11.95
	4-Wire DS1 Digital Loop - Zone 2		2	USL	USLXX	75.40	313.08	219.72	96.86	40.45			18.98	8.43	11.95	11.95
	4-Wire DS1 Digital Loop - Zone 3		3	USL	USLXX	98.59	313.08	219.72	96.86	40.45			18.98	8.43	11.95	11.95
	Order Coordination for Specified Conversion Time (per LSR)			USL	OCOSL		34.59									
	CLEC to CLEC Conversion Charge without outside dispatch			USL	UREWO		130.47	40.11					20.35	10.54	13.32	13.32
4-WIRE 19.2, 56 OR 64 KBPS DIGITAL GRADE LOOP																

UNBUNDLED NETWORK ELEMENTS - Tennessee														Attachment: 2		Exhibit: A	
CATEGORY		RATE ELEMENTS	Interim	Zone	BCS	USOC	RATES ($)					Svc Order Submitted Elec per LSR	Svc Order Submitted Manually per LSR	Incremental Charge - Manual Svc Order vs. Electronic-1st	Incremental Charge - Manual Svc Order vs. Electronic-Add'l	Incremental Charge - Manual Svc Order vs. Electronic-Disc 1st	Incremental Charge - Manual Svc Order vs. Electronic-Disc Add'l
							Rec	Nonrecurring		Nonrecurring Disconnect		OSS Rates ($)					
								First	Add'l	First	Add'l	SOMEC	SOMAN	SOMAN	SOMAN	SOMAN	SOMAN
		4 Wire Unbundled Digital 19.2 Kbps		1	UDL	UDL19	31.10	207.01	141.38	90.70	44.18			20.35	10.54	13.32	13.32
		4 Wire Unbundled Digital 19.2 Kbps		2	UDL	UDL19	40.61	207.01	141.38	90.70	44.18			20.35	10.54	13.32	13.32
		4 Wire Unbundled Digital 19.2 Kbps		3	UDL	UDL19	53.11	207.01	141.38	90.70	44.18			20.35	10.54	13.32	13.32
		4 Wire Unbundled Digital Loop 56 Kbps - Zone 1		1	UDL	UDL56	31.10	207.01	141.38	90.70	44.18			20.35	10.54	13.32	13.32
		4 Wire Unbundled Digital Loop 56 Kbps - Zone 2		2	UDL	UDL56	40.61	207.01	141.38	90.70	44.18			20.35	10.54	13.32	13.32
		4 Wire Unbundled Digital Loop 56 Kbps - Zone 3		3	UDL	UDL56	53.11	207.01	141.38	90.70	44.18			20.35	10.54	13.32	13.32
		Order Coordination for Specified Conversion Time (per LSR)			UDL	OCOSL		34.29									
		4 Wire Unbundled Digital Loop 64 Kbps - Zone 1		1	UDL	UDL64	31.10	207.01	141.38	90.70	44.18			20.35	10.54	13.32	13.32
		4 Wire Unbundled Digital Loop 64 Kbps - Zone 2		2	UDL	UDL64	40.61	207.01	141.38	90.70	44.18			20.35	10.54	13.32	13.32
		4 Wire Unbundled Digital Loop 64 Kbps - Zone 3		3	UDL	UDL64	53.11	207.01	141.38	90.70	44.18			20.35	10.54	13.32	13.32
		Order Coordination for Specified Conversion Time (per LSR)			UDL	OCOSL		34.29									
		CLEC to CLEC Conversion Charge without outside dispatch			UDL	UREWO		102.28	49.82					20.35	10.54	13.32	13.32
	2-WIRE Unbundled COPPER LOOP																
		2-Wire Unbundled Copper Loop-Designed including manual service inquiry & facility reservation - Zone 1	I	1	UCL	UCLPB	13.19	31.99	20.02	10.65	1.41			20.35	10.54	13.32	13.32
		2-Wire Unbundled Copper Loop-Designed including manual service inquiry & facility reservation - Zone 2	I	2	UCL	UCLPB	17.23	31.99	20.02	10.65	1.41			20.35	10.54	13.32	13.32
		2 Wire Unbundled Copper Loop-Designed including manual service inquiry & facility reservation - Zone 3	I	3	UCL	UCLPB	22.53	31.99	20.02	10.65	1.41			20.35	10.54	13.32	13.32
		Order Coordination for Unbundled Copper Loops (per loop)			UCL	UCLMC		36.52	36.52								
		2-Wire Unbundled Copper Loop-Designed without manual service inquiry and facility reservation - Zone 1	I	1	UCL	UCLPW	13.19	31.99	20.02	10.65	1.41			20.35	10.54	13.32	13.32
		2-Wire Unbundled Copper Loop-Designed without manual service inquiry and facility reservation - Zone 2	I	2	UCL	UCLPW	17.23	31.99	20.02	10.65	1.41			20.35	10.54	13.32	13.32
		2-Wire Unbundled Copper Loop-Designed without manual service inquiry and facility reservation - Zone 3	I	3	UCL	UCLPW	22.53	31.99	20.02	10.65	1.41			20.35	10.54	13.32	13.32
		Order Coordination for Unbundled Copper Loops (per loop)			UCL	UCLMC		36.52	36.52								
		CLEC to CLEC Conversion Charge without outside dispatch (UCL-Des)	I		UCL	UREWO		31.99	20.02					20.35	10.54	13.32	13.32
	4-WIRE COPPER LOOP																
		4-Wire Copper Loop-Designed including manual service inquiry and facility reservation - Zone 1	I	1	UCL	UCL4S	24.70	122.76	85.57	76.35	39.16			20.35	10.54	13.32	13.32
		4-Wire Copper Loop-Designed including manual service inquiry and facility reservation - Zone 2	I	2	UCL	UCL4S	32.25	122.76	85.57	76.35	39.16			20.35	10.54	13.32	13.32
		4-Wire Copper Loop-Designed including manual service inquiry and facility reservation - Zone 3	I	3	UCL	UCL4S	42.17	122.76	85.57	76.35	39.16			20.35	10.54	13.32	13.32
		Order Coordination for Unbundled Copper Loops (per loop)			UCL	UCLMC		36.52	36.52								
		4-Wire Copper Loop-Designed without manual service inquiry and facility reservation - Zone 1	I	1	UCL	UCL4W	24.70	122.76	85.57	76.35	39.16			20.35	10.54	13.32	13.32
		4-Wire Copper Loop-Designed without manual service inquiry and facility reservation - Zone 2	I	2	UCL	UCL4W	32.25	122.76	85.57	76.35	39.16			20.35	10.54	13.32	13.32
		4-Wire Copper Loop-Designed without manual service inquiry and facility reservation - Zone 3	I	3	UCL	UCL4W	42.17	122.76	85.57	76.35	39.16			20.35	10.54	13.32	13.32
		Order Coordination for Unbundled Copper Loops (per loop)			UCL	UCLMC		36.52	36.52								
		CLEC to CLEC Conversion Charge without outside dispatch (UCL-Des)	I		UCL	UREWO		31.99	20.02					20.35	10.54	13.32	13.32
LOOP MODIFICATION																	
		Unbundled Loop Modification, Removal of Load Coils - 2 Wire pair less than or equal to 18k ft, per Unbundled Loop			UAL, UHL, UCL, UEQ, ULS, UEA, UEANL, UEPSR, UEPSB	ULM2L		65.40	65.40					20.35	10.54	13.32	13.32
		Unbundled Loop Modification Removal of Load Coils - 4 Wire less than or equal to 18K ft, per Unbundled Loop			UHL, UCL, UEA	ULM4L		65.40	65.40					20.35	10.54	13.32	13.32
		Unbundled Loop Modification Removal of Bridged Tap Removal, per unbundled loop	I		UAL, UHL, UCL, UEQ, ULS, UEA, UEANL, UEPSR, UEPSB	ULMBT		65.44	65.44					20.35	10.54	13.32	13.32
SUB-LOOPS																	
	Sub-Loop Distribution																

UNBUNDLED NETWORK ELEMENTS - Tennessee														Attachment: 2		Exhibit: A	
CATEGORY		RATE ELEMENTS	Interim	Zone	BCS	USOC	RATES ($)					Svc Order Submitted Elec per LSR	Svc Order Submitted Manually per LSR	Incremental Charge - Manual Svc Order vs. Electronic-1st	Incremental Charge - Manual Svc Order vs. Electronic-Add'l	Incremental Charge - Manual Svc Order vs. Electronic-Disc 1st	Incremental Charge - Manual Svc Order vs. Electronic-Disc Add'l
							Rec	Nonrecurring		Nonrecurring Disconnect		OSS Rates ($)					
								First	Add'l	First	Add'l	SOMEC	SOMAN	SOMAN	SOMAN	SOMAN	SOMAN
		Sub-Loop - Per Cross Box Location - CLEC Feeder Facility Set-Up	I		UEANL	USBSA		517.25	517.25					20.35	10.54	13.32	13.32
		Sub-Loop - Per Cross Box Location - Per 25 Pair Panel Set-Up	I		UEANL	USBSB		42.68	42.68					20.35	10.54	13.32	13.32
		Sub-Loop - Per Building Equipment Room - CLEC Feeder Facility Set-Up	I		UEANL	USBSC		313.01	313.01					20.35	10.54	13.32	13.32
		Sub-Loop - Per Building Equipment Room - Per 25 Pair Panel Set-Up	I		UEANL	USBSD		108.06	108.06					20.35	10.54	13.32	13.32
		Sub-Loop Distribution Per 2-Wire Analog Voice Grade Loop - Statewide		sw	UEANL	USBN2	10.02	148.84	112.34	73.14	36.65			20.35	10.54	13.32	13.32
		Order Coordination for Unbundled Sub-Loops, per sub-loop pair			UEANL	USBMC		34.29	34.29								
		Sub-Loop Distribution Per 4-Wire Analog Voice Grade Loop - Zone 1		1	UEANL	USBN4	7.30	147.93	75.11	99.96	16.98			20.35	10.54	13.32	13.32
		Sub-Loop Distribution Per 4-Wire Analog Voice Grade Loop - Zone 2		2	UEANL	USBN4	9.54	147.93	75.11	99.96	16.98			20.35	10.54	13.32	13.32
		Sub-Loop Distribution Per 4-Wire Analog Voice Grade Loop - Zone 3		3	UEANL	USBN4	12.47	147.93	75.11	99.96	16.98			20.35	10.54	13.32	13.32
		Order Coordination for Unbundled Sub-Loops, per sub-loop pair			UEANL	USBMC		34.29	34.29								
		Sub-Loop 2-Wire Intrabuilding Network Cable (INC)	I		UEANL	USBR2	1.35	94.56	29.35					20.35	10.54	13.32	13.32
		Order Coordination for Unbundled Sub-Loops, per sub-loop pair			UEANL	USBMC		34.29	34.29								
		Sub-Loop 4-Wire Intrabuilding Network Cable (INC)	I		UEANL	USBR4	2.26	116.14	37.10					20.35	10.54	13.32	13.32
		Order Coordination for Unbundled Sub-Loops, per sub-loop pair			UEANL	USBMC		34.29	34.29								
		Loop Testing - Basic 1st Half Hour			UEANL	URET1		78.92	78.92								
		Loop Testing - Basic Additional Half Hour			UEANL	URETA		23.33	23.33								
		2 Wire Copper Unbundled Sub-Loop Distribution - Zone 1	I	1	UEF	UCS2X	5.16	110.71	37.89	94.41	13.09			20.35	10.54	13.32	13.32
		2 Wire Copper Unbundled Sub-Loop Distribution - Zone 2	I	2	UEF	UCS2X	6.74	110.71	37.89	94.41	13.09			20.35	10.54	13.32	13.32
		2 Wire Copper Unbundled Sub-Loop Distribution - Zone 3	I	3	UEF	UCS2X	8.81	110.71	37.89	94.41	13.09			20.35	10.54	13.32	13.32
		Order Coordination for Unbundled Sub-Loops, per sub-loop pair			UEF	USBMC		34.29	34.29								
		4 Wire Copper Unbundled Sub-Loop Distribution - Zone 1	I	1	UEF	UCS4X	6.52	117.12	44.30	99.96	16.98			20.35	10.54	13.32	13.32
		4 Wire Copper Unbundled Sub-Loop Distribution - Zone 2	I	2	UEF	UCS4X	8.52	117.12	44.30	99.96	16.98			20.35	10.54	13.32	13.32
		4 Wire Copper Unbundled Sub-Loop Distribution - Zone 3	I	3	UEF	UCS4X	11.14	117.12	44.30	99.96	16.98			20.35	10.54	13.32	13.32
		Order Coordination for Unbundled Sub-Loops, per sub-loop pair			UEF	USBMC		34.29	34.29								
		Loop Testing - Basic 1st Half Hour			UEF	URET1		78.92	78.92								
		Loop Testing - Basic Additional Half Hour			UEF	URETA		23.33	23.33								
	Unbundled Network Terminating Wire (UNTW)																
		Unbundled Network Terminating Wire (UNTW) per Pair	I		UENTW	UENPP	0.4555	2.48	2.48					20.35	10.54	13.32	13.32
	Network Interface Device (NID)																
		Network Interface Device (NID) - 1-2 lines			UENTW	UND12		89.69	54.56	0.6391	0.6391			20.35	10.54	13.32	13.32
		Network Interface Device (NID) - 1-6 lines			UENTW	UND16		129.65	94.51	0.6522	0.6522			20.35	10.54	13.32	13.32
		Network Interface Device Cross Connect - 2 W			UENTW	UNDC2		11.11	11.11					20.35	10.54	13.32	13.32
		Network Interface Device Cross Connect - 4W			UENTW	UNDC4		11.11	11.11					20.35	10.54	13.32	13.32
UNE OTHER, PROVISIONING ONLY - NO RATE																	
		NID - Dispatch and Service Order for NID installation			UENTW	UNDBX	0.00	0.00									
		UNTW Circuit Id Establishment, Provisioning Only - No Rate			UENTW	UENCE	0.00	0.00									
		Unbundled Contract Name, Provisioning Only - No Rate			UEANL,UEF,UEQ,UENTW	UNECN	0.00	0.00									
UNE OTHER, PROVISIONING ONLY - NO RATE																	
		Unbundled Contact Name, Provisioning Only - no rate			UAL,UCL,UDC,UDL,UDN,UEA,UHL,ULC	UNECN	0.00	0.00									
		Unbundled Sub-Loop Feeder-2 Wire Cross Box Jumper - no rate			UEA,UDN,UCL,UDC	USBFQ	0.00	0.00									

UNBUNDLED NETWORK ELEMENTS - Tennessee														Attachment: 2		Exhibit: A	
CATEGORY		RATE ELEMENTS	Interim	Zone	BCS	USOC	RATES ($)					Svc Order Submitted Elec per LSR	Svc Order Submitted Manually per LSR	Incremental Charge - Manual Svc Order vs. Electronic-1st	Incremental Charge - Manual Svc Order vs. Electronic-Add'l	Incremental Charge - Manual Svc Order vs. Electronic-Disc 1st	Incremental Charge - Manual Svc Order vs. Electronic-Disc Add'l
							Rec	Nonrecurring		Nonrecurring Disconnect		OSS Rates ($)					
								First	Add'l	First	Add'l	SOMEC	SOMAN	SOMAN	SOMAN	SOMAN	SOMAN
		Unbundled Sub-Loop Feeder-4 Wire Cross Box Jumper - no rate			UEA,USL,UCL,UDL	USBFR	0.00	0.00									
		Unbundled DS1 Loop - Superframe Format Option - no rate			USL	CCOSF	0.00	0.00									
		Unbundled DS1 Loop - Expanded Superframe Format option - no rate			USL	CCOEF	0.00	0.00									
HIGH CAPACITY UNBUNDLED LOCAL LOOP																	
		High Capacity Unbundled Local Loop - DS3 - Per Mile per month			UE3	1L5ND	9.19										
		High Capacity Unbundled Local Loop - DS3 - Facility Termination per month			UE3	UE3PX	374.24	595.37	304.50	234.83	170.16			36.84	36.84		
		High Capacity Unbundled Local Loop - STS-1 - Per Mile per month			UDLSX	1L5ND	9.19										
		High Capacity Unbundled Local Loop - STS-1 - Facility Termination per month			UDLSX	UDLS1	389.35	595.37	304.50	215.82	151.15			36.84	36.84		
	Note (1): Rates provided in TN for both electronic and manual Loop Makeup are interim and subject to retro-active true-up adjustments pending a permanent rate ruling on these rate elements from the Tennessee Regulatory Authority.																
LOOP MAKE-UP																	
		Loop Makeup - Preordering Without Reservation, per working or spare facility queried (Manual).	R		UMK	UMKLW		0.76	0.76					19.99	19.99	19.99	19.99
		Loop Makeup - Preordering With Reservation, per spare facility queried (Manual).	R		UMK	UMKLP		0.76	0.76					19.99	19.99	19.99	19.99
		Loop Makeup--With or Without Reservation, per working or spare facility queried (Mechanized)	R		UMK	UMKMQ		0.76	0.76								
LINE SHARING AND LINE SPLITTING																	
	NOTE 1: The Line Sharing monthly recurring rates for all installations completed from October 02, 2003 through midnight October 01, 2004 shall be billed as follows:																
	NOTE 1: 10/02/2003 – 10/01/2004: 25% of the rate for an unbundled copper loop non-designed ("UCLND")																
	NOTE 1: 10/02/2004 – 10/01/2005: 50% of the rate for UCLND																
	NOTE 1: 10/02/2005 – 10/01/2006: 75% of the rate for UCLND																
	NOTE 1: Above will apply to USOCS: ULSDT and ULSCT																
	**NOTE 2: The Line Sharing monthly recurring rates with USOCs ULSDC and ULSCC applies only to circuits installed and inservice on or before October 1, 2003																
	LINE SHARING																
	SPLITTERS-CENTRAL OFFICE BASED																
		Line Sharing Splitter, per System 96 Line Capacity			ULS	ULSDA	100.00	150.00	0.00	0.00	0.00			20.35	10.54	13.32	13.32
		Line Sharing Splitter, per System 24 Line Capacity			ULS	ULSDB	25.00	150.00	0.00	0.00	0.00			20.35	10.54	13.32	13.32
		Line Sharing-DLEC Owned Splitter in CO-CFA activaton-deactivation (per LSOD)			ULS	ULSDG		163.06	0.00	92.71	0.00			20.35	10.54	13.32	13.32
	END USER ORDERING-CENTRAL OFFICE BASED LINE SHARING																
		Line Sharing - per Line Activation (BST Owned splitter) - OBSOLETE see **NOTE 2			ULS	ULSDC	0.61	40.00	31.39	0.00	0.00			20.35	10.54	13.32	13.32
		Line Share Service, TRO per line activation, BST owned splitter - Central Office Located (25% of UCLND) - please see NOTE 1 (E:10/2/2003)			ULS	ULSDT	2.94	40.00	31.39	0.00	0.00						
		Line Share Service, TRO per line activation, BST owned splitter - Central Office Located (50% of UCLND) - please see NOTE 1 (E:10/2/2004)			ULS	ULSDT	5.87	40.00	31.39	0.00	0.00						
		Line Share Service, TRO per line activation, BST owned splitter - Central Office Located (75% of UCLND) - please see NOTE 1 (E:10/2/2005)			ULS	ULSDT	8.81	40.00	31.39	0.00	0.00						
		Line Sharing - per Subsequent Activity per Line Rearrangement(BST Owned Splitter)			ULS	ULSDS		30.00	15.00					20.35	10.54	13.32	13.32
		Line Sharing - per Subsequent Activity per Line Rearrangement(DLEC Owned Splitter)			ULS	ULSCS		30.00	15.00					20.35	10.54	13.32	13.32
		Line Sharing - per Line Activation (DLEC owned Splitter) - OBSOLETE see **NOTE 2			ULS	ULSCC	0.61	47.44	19.31	0.00	0.00			20.35	10.54	13.32	13.32
		Line Share Service, TRO per line activation, CLEC owned splitter - Central Office Located (25% of UCLND) - please see NOTE 1 (E:10/2/2003)			ULS	ULSCT	2.94	47.44	19.31	0.00	0.00						
		Line Share Service, TRO per line activation, CLEC owned splitter - Central Office Located (50% of UCLND) - please see NOTE 1 (E:10/2/2004)			ULS	ULSCT	5.87	47.44	19.31	0.00	0.00						

UNBUNDLED NETWORK ELEMENTS - Tennessee														Attachment: 2		Exhibit: A	
CATEGORY	RATE ELEMENTS	Interim	Zone	BCS	USOC	RATES ($)					Svc Order Submitted Elec per LSR	Svc Order Submitted Manually per LSR	Incremental Charge - Manual Svc Order vs. Electronic-1st	Incremental Charge - Manual Svc Order vs. Electronic-Add'l	Incremental Charge - Manual Svc Order vs. Electronic-Disc 1st	Incremental Charge - Manual Svc Order vs. Electronic-Disc Add'l
						Rec	Nonrecurring		Nonrecurring Disconnect		OSS Rates ($)					
							First	Add'l	First	Add'l	SOMEC	SOMAN	SOMAN	SOMAN	SOMAN	SOMAN
	Line Share Service, TRO per line activation, CLEC owned splitter - Central Office Located (75% of UCLND) - please see NOTE 1 (E:10/2/2005)			ULS	ULSCT	8.81	47.44	19.31	0.00	0.00						
LINE SPLITTING																
END USER ORDERING-CENTRAL OFFICE BASED																
	Line Splitting - per line activation DLEC owned splitter			UEPSR UEPSB	UREOS	0.61										
	Line Splitting - per line activation BST owned - physical			UEPSR UEPSB	UREBP	0.61	48.96	21.39	35.06	10.79			20.35	10.54	13.32	13.32
	Line Splitting - per line activation BST owned - virtual			UEPSR UEPSB	UREBV	0.61	48.96	21.39	35.06	10.79			20.35	10.54	13.32	13.32
MAINTENANCE																
	No Trouble Found - per 1/2 hour increments - Basic						80.00	55.00								
	No Trouble Found - per 1/2 hour increments - Overtime						120.00	82.50								
	No Trouble Found - per 1/2 hour increments - Premium						160.00	110.00								
UNBUNDLED DEDICATED TRANSPORT																
INTEROFFICE CHANNEL - DEDICATED TRANSPORT																
	Interoffice Channel - Dedicated Transport - 2-Wire Voice Grade - Per Mile per month			U1TVX	1L5XX	0.0054										
	Interoffice Channel - Dedicated Transport- 2- Wire Voice Grade - Facility Termination			U1TVX	U1TV2	18.58	55.39	17.37	27.96	3.51			20.35	21.09		
	Interoffice Channel - Dedicated Transpor t- 2-Wire Voice Grade Rev Bat. - Per Mile per month			U1TVX	1L5XX	0.0054										
	Interoffice Channel - Dedicated Transport- 2- Wire VG Rev Bat. - Facility Termination			U1TVX	U1TR2	18.58	55.39	17.37	27.96	3.51			20.35	21.09		
	Interoffice Channel - Dedicated Transport - 4-Wire Voice Grade - Per Mile per month			U1TVX	1L5XX	0.0054										
	Interoffice Channel - Dedicated Transport - 4- Wire Voice Grade - Facility Termination			U1TVX	U1TV4	24.09	37.87	26.02	30.78	13.07			15.08	15.08		
	Interoffice Channel - Dedicated Transport - 56 kbps - per mile per month			U1TDX	1L5XX	0.0174										
	Interoffice Channel - Dedicated Transport - 56 kbps - Facility Termination			U1TDX	U1TD5	17.98	55.39	17.37	27.96	3.51			20.35	21.09		
	Interoffice Channel - Dedicated Transport - 64 kbps - per mile per month			U1TDX	1L5XX	0.0174										
	Interoffice Channel - Dedicated Transport - 64 kbps - Facility Termination			U1TDX	U1TD6	17.98	55.39	17.37	27.96	3.51			20.35	21.09		
	Interoffice Channel - Dedicated Channel - DS1 - Per Mile per month			U1TD1	1L5XX	0.3562										
	Interoffice Channel - Dedicated Tranport - DS1 - Facility Termination			U1TD1	U1TF1	77.86	112.40	76.27	19.55	14.99			20.35	21.09		
	Interoffice Channel - Dedicated Transport - DS3 - Per Mile per month			U1TD3	1L5XX	2.34										
	Interoffice Channel - Dedicated Transport - DS3 - Facility Termination per month			U1TD3	U1TF3	848.99	395.29	176.56	109.04	105.91			36.84	36.84		
	Interoffice Channel - Dedicated Transport - STS-1 - Per Mile per month			U1TS1	1L5XX	2.34										
	Interoffice Channel - Dedicated Transport - STS-1 - Facility Termination			U1TS1	U1TFS	849.30	395.29	176.56	109.04	105.91			36.84	36.84		
DARK FIBER																
	Dark Fiber, Four Fiber Strands, Per Route Mile or Fraction Thereof per month - Interoffice Channel			UDF, UDFCX	1L5DF	28.74										
	NRC Dark Fiber - Interoffice Channel			UDF, UDFCX	UDF14		1,121.00	153.19	580.26	357.17			20.35	10.54	13.32	13.32
	Dark Fiber, Four Fiber Strands, Per Route Mile or Fraction Thereof per month - Local Loop			UDF, UDFCX	1L5DL	58.83										
	NRC Dark Fiber - Local Loop			UDF, UDFCX	UDFL4		1,121.00	153.19	580.26	357.17			20.35	10.54	13.32	13.32
8XX ACCESS TEN DIGIT SCREENING																
	8XX Access Ten Digit Screening, Per Call			OHD		0.0005192										
	8XX Access Ten Digit Screening, Reservation Charge Per 8XX Number Reserved			OHD	N8R1X		5.21	0.76					20.35	20.35	13.28	13.28
	8XX Access Ten Digit Screening, Per 8XX No. Established W/O POTS Translations			OHD			11.47	1.46	7.34	0.7602			20.35	20.35	13.28	13.28

UNBUNDLED NETWORK ELEMENTS - Tennessee														Attachment: 2		Exhibit: A	
CATEGORY		RATE ELEMENTS	Interim	Zone	BCS	USOC	RATES ($)					Svc Order Submitted Elec per LSR	Svc Order Submitted Manually per LSR	Incremental Charge - Manual Svc Order vs. Electronic-1st	Incremental Charge - Manual Svc Order vs. Electronic-Add'l	Incremental Charge - Manual Svc Order vs. Electronic-Disc 1st	Incremental Charge - Manual Svc Order vs. Electronic-Disc Add'l
							Rec	Nonrecurring		Nonrecurring Disconnect		OSS Rates ($)					
								First	Add'l	First	Add'l	SOMEC	SOMAN	SOMAN	SOMAN	SOMAN	SOMAN
		8XX Access Ten Digit Screening, Per 8XX No. Established With POTS Translations			OHD	N8FTX		11.47	1.46	7.34	0.7602			20.35	20.35	13.28	13.28
		8XX Access Ten Digit Screening, Customized Area of Service Per 8XX Number			OHD	N8FCX		4.47	2.24					20.35	20.35	13.28	13.28
		8XX Access Ten Digit Screening, Multiple InterLATA CXR Routing Per CXR Requested Per 8XX No.			OHD	N8FMX		5.23	3.00					20.35	20.35	13.28	13.28
		8XX Access Ten Digit Screening, Change Charge Per Request			OHD	N8FAX		5.97	0.76					20.35	20.35	13.28	13.28
		8XX Access Ten Digit Screening, Call Handling and Destination Features			OHD	N8FDX		4.47						20.35	20.35	13.28	13.28
LINE INFORMATION DATA BASE ACCESS (LIDB)																	
		LIDB Common Transport Per Query			OQT		0.0000354										
		LIDB Validation Per Query			OQU		0.0117403										
		LIDB Originating Point Code Establishment or Change			OQT, OQU	NRBPX		49.03						20.35	20.35	13.28	13.28
SIGNALING (CCS7)																	
		CCS7 Signaling Termination, Per STP Port			UDB	PT8SX	138.41										
		CCS7 Signaling Usage, Per TCAP Message			UDB		0.0000916										
		CCS7 Signaling Connection, Per link (A link)			UDB	TPP++	17.84	130.84	130.84					20.35	20.35	13.32	13.32
		CCS7 Signaling Connection, Per link (B link) (also known as D link)			UDB	TPP++	17.84	130.84	130.84					20.35	20.35	13.32	13.32
		CCS7 Signaling Usage, Per ISUP Message			UDB		0.0000373										
		CCS7 Signaling Usage Surrogate, per link per LATA			UDB	STU56	352.30										
		Signaling Point Code, per Originating Point Code Establishment or Change, per STP			UDB	CCAPO		121.77	121.77					20.35	20.35	13.32	13.32
CALLING NAME (CNAM) SERVICE																	
		CNAM For DB Owners - Service Establishment			OQV			43.27									
		CNAM For Non DB Owners - Service Establishment			OQV			43.27									
		CNAM For DB Owners - Service Provisioning With Point Code Establishment			OQV			1,868.00	1,382.00								
		CNAM For Non DB Owners - Service Provisioning With Point Code Establishment			OQV			645.50	432.23								
		CNAM for DB Owners, Per Query			OQV		0.0010541										
		CNAM for Non DB Owners, Per Query			OQV		0.0010541										
		CNAM (Non-Databs Owner), NRC, applies when using the Character Based User Interface (CHUI)			OQV	CDDCH								20.35	20.35	13.28	13.28
SELECTIVE ROUTING																	
		Selective Routing Per Unique Line Class Code Per Request Per Switch						179.60	179.60					20.35	20.35		
VIRTUAL COLLOCATION																	
		Virtual Collocation-2 Wire Cross Connects (Loop) for Line Splitting			UEPSR UEPSB	VE1LS	0.57	11.62	9.90	10.38	8.66			19.99	19.99	19.99	19.99
PHYSICAL COLLOCATION																	
		Physical Collocation-2 Wire Cross Connects (Loop) for Line Splitting			UEPSR UEPSB	PE1LS	0.7905	11.62	9.90	10.38	8.66			19.99	19.99	19.99	19.99
AIN SELECTIVE CARRIER ROUTING																	
		Regional Service Establishment			SRC	SRCEC		190,638.00						20.35			
		End Office Establishment			SRC	SRCEO		317.55	317.55	3.19	3.19			20.35	20.35	13.28	13.28
		Query NRC, per query			SRC		0.0206047										
AIN - BELLSOUTH AIN SMS ACCESS SERVICE																	
		AIN SMS Access Service - Service Establishment, Per State, Initial Setup			A1N	CAMSE		135.56	135.56					20.35	20.35	13.28	13.28
		AIN SMS Access Service - Port Connection - Dial/Shared Access			A1N	CAMDP		41.75	41.75					20.35	20.35	13.28	13.28
		AIN SMS Access Service - Port Connection - ISDN Access			A1N	CAM1P		41.75	41.75					20.35	20.35	13.28	13.28
		AIN SMS Access Service - User Identification Codes - Per User ID Code			A1N	CAMAU		96.63	96.63					20.35	20.35	13.28	13.28
		AIN SMS Access Service - Security Card, Per User ID Code, Initial or Replacement			A1N	CAMRC		113.67	113.67					20.35	20.35	13.28	13.28
		AIN SMS Access Service - Storage, Per Unit (100 Kilobytes)					0.0024										
		AIN SMS Access Service - Session, Per Minute					0.0820123										

UNBUNDLED NETWORK ELEMENTS - Tennessee														Attachment: 2		Exhibit: A	
CATEGORY		RATE ELEMENTS	Interim	Zone	BCS	USOC	RATES ($)					Svc Order Submitted Elec per LSR	Svc Order Submitted Manually per LSR	Incremental Charge - Manual Svc Order vs. Electronic-1st	Incremental Charge - Manual Svc Order vs. Electronic-Add'l	Incremental Charge - Manual Svc Order vs. Electronic-Disc 1st	Incremental Charge - Manual Svc Order vs. Electronic-Disc Add'l
							Rec	Nonrecurring		Nonrecurring Disconnect		OSS Rates ($)					
								First	Add'l	First	Add'l	SOMEC	SOMAN	SOMAN	SOMAN	SOMAN	SOMAN
		AIN SMS Access Service - Company Performed Session, Per Minute					2.27										
AIN - BELLSOUTH AIN TOOLKIT SERVICE																	
		AIN Toolkit Service - Service Establishment Charge, Per State, Initial Setup			CAM	BAPSC		132.04	132.04					20.35	20.35	13.28	13.28
		AIN Toolkit Service - Training Session, Per Customer				BAPVX		7,915.00	7,915.00					20.35	20.35	13.28	13.28
		AIN Toolkit Service - Trigger Access Charge, Per Trigger, Per DN, Term. Attempt				BAPTT		31.21	31.21					20.35	20.35	13.28	13.28
		AIN Toolkit Service - Trigger Access Charge, Per Trigger, Per DN, Off-Hook Delay				BAPTD		31.21	31.21					20.35	20.35	13.28	13.28
		AIN Toolkit Service - Trigger Access Charge, Per Trigger, Per DN, Off-Hook Immediate				BAPTM		31.21	31.21					20.35	20.35	13.28	13.28
		AIN Toolkit Service - Trigger Access Charge, Per Trigger, Per DN, 10-Digit PODP				BAPTO		85.24	85.24					20.35	20.35	13.28	13.28
		AIN Toolkit Service - Trigger Access Charge, Per Trigger, Per DN, CDP				BAPTC		85.24	85.24					20.35	20.35	13.28	13.28
		AIN Toolkit Service - Trigger Access Charge, Per Trigger, Per DN, Feature Code				BAPTF		85.24	85.24					20.35	20.35	13.28	13.28
		AIN Toolkit Service - Query Charge, Per Query					0.0211882										
		AIN Toolkit Service - Type 1 Node Charge, Per AIN Toolkit Subscription, Per Node, Per Query					0.0054774										
		AIN Toolkit Service - SCP Storage Charge, Per SMS Access Account, Per 100 Kilobytes					1.50										
		AIN Toolkit Service - Monthly report - Per AIN Toolkit Service Subscription			CAM	BAPMS	17.43	33.52	33.52					20.35	20.35	13.28	13.28
		AIN Toolkit Service - Special Study - Per AIN Toolkit Service Subscription			CAM	BAPLS	0.1321116	36.23	36.23					20.35	20.35	13.28	13.28
		AIN Toolkit Service - Call Event Report - Per AIN Toolkit Service Subscription			CAM	BAPDS	17.35	33.52	33.52					20.35	20.35	13.28	13.28
		AIN Toolkit Service - Call Event Special Study - Per AIN Toolkit Service Subscription			CAM	BAPES	0.0511435	36.23	36.23					20.35	20.35	13.28	13.28
ENHANCED EXTENDED LINK (EELs)																	
	NOTE: The monthly recurring and non-recurring charges below will apply and the Switch-As-Is Charge will not apply for UNE combinations provisioned as ' Ordinarily Combined' Network Elements.																
	NOTE: The monthly recurring and the Switch-As-Is Charge and not the non-recurring charges below will apply for UNE combinations provisioned as ' Currently Combined' Network Elements.																
	EXTENTED 2-WIRE VOICE GRADE EXTENDED LOOP WITH DEDICATED DS1 INTEROFFICE TRANSPORT																
		First 2-Wire VG Loop (SL2) in Combination - Zone 1		1	UNCVX	UEAL2	16.56	108.76	35.47	72.94	10.86			20.35	21.09		
		First 2-Wire VG Loop (SL2) in Combination - Zone 2		2	UNCVX	UEAL2	21.63	108.76	35.47	72.94	10.86			20.35	21.09		
		First 2-Wire VG Loop (SL2) in Combination - Zone 3		3	UNCVX	UEAL2	28.28	108.76	35.47	72.94	10.86			20.35	21.09		
		Interoffice Transport - Dedicated - DS1 combination - Per Mile per month			UNC1X	1L5XX	0.3562										
		Interoffice Transport - Dedicated - DS1 combination - Facility Termination per month			UNC1X	U1TF1	77.86	171.24	113.12	70.07	30.90			20.35	21.09		
		1/0 Channelization System in combination Per Month			UNC1X	MQ1	80.77	105.76	14.48	3.04	2.74						
		Voice Grade COCI - Per Month			UNCVX	1D1VG	0.91	5.70	4.42								
		Each Additional 2-Wire VG Loop (SL 2) in Combination - Zone 1		1	UNCVX	UEAL2	16.56	108.76	35.47	72.94	10.86			20.35	21.09		
		Each Additional 2-Wire VG Loop (SL 2) in Combination - Zone 2		2	UNCVX	UEAL2	21.63	108.76	35.47	72.94	10.86			20.35	21.09		
		Each Additional 2-Wire VG Loop (SL 2) in Combination - Zone 3		3	UNCVX	UEAL2	28.28	108.76	35.47	72.94	10.86			20.35	21.09		
		Voice Grade COCI - Per Month			UNCVX	1D1VG	0.91	5.70	4.42								
		Nonrecurring Currently Combined Network Elements Switch -As-Is Charge			UNC1X	UNCCC		52.73	24.62	9.12	9.12			20.35	21.09		
	EXTENDED 4-WIRE VOICE GRADE EXTENDED LOOP WITH DEDICATED DS1 INTEROFFICE TRANSPORT																
		First 4-Wire Analog Voice Grade Loop in Combination - Zone 1		1	UNCVX	UEAL4	24.70	108.76	35.47	72.94	10.86			20.35	21.09		
		First 4-Wire Analog Voice Grade Loop in Combination - Zone 2		2	UNCVX	UEAL4	32.26	108.76	35.47	72.94	10.86			20.35	21.09		

UNBUNDLED NETWORK ELEMENTS - Tennessee														Attachment: 2		Exhibit: A	
CATEGORY		RATE ELEMENTS	Interim	Zone	BCS	USOC	RATES ($)					Svc Order Submitted Elec per LSR	Svc Order Submitted Manually per LSR	Incremental Charge - Manual Svc Order vs. Electronic-1st	Incremental Charge - Manual Svc Order vs. Electronic-Add'l	Incremental Charge - Manual Svc Order vs. Electronic-Disc 1st	Incremental Charge - Manual Svc Order vs. Electronic-Disc Add'l
							Rec	Nonrecurring		Nonrecurring Disconnect		OSS Rates ($)					
								First	Add'l	First	Add'l	SOMEC	SOMAN	SOMAN	SOMAN	SOMAN	SOMAN
		First 4-Wire Analog Voice Grade Loop in Combination - Zone 3		3	UNCVX	UEAL4	42.18	108.76	35.47	72.94	10.86			20.35	21.09		
		Interoffice Transport - Dedicated - DS1 combination - Per Mile Per Month			UNC1X	1L5XX	0.3562										
		Interoffice Transport - Dedicated - DS1 - Facility Termination Per Month			UNC1X	U1TF1	77.86	171.24	113.12	70.07	30.90			20.35	21.09		
		1/0 Channel System in combination Per Month			UNC1X	MQ1	80.77	105.76	14.48	3.04	2.74						
		Voice Grade COCI in combination - per month			UNCVX	1D1VG	0.91	5.70	4.42								
		Additional 4-Wire Analog Voice Grade Loop in same DS1 Interoffice Transport Combination - Zone 1		1	UNCVX	UEAL4	24.70	108.76	35.47	72.94	10.86			20.35	21.09		
		Additional 4-Wire Analog Voice Grade Loop in same DS1 Interoffice Transport Combination - Zone 2		2	UNCVX	UEAL4	32.26	108.76	35.47	72.94	10.86			20.35	21.09		
		Additional 4-Wire Analog Voice Grade Loop in same DS1 Interoffice Transport Combination - Zone 3		3	UNCVX	UEAL4	42.18	108.76	35.47	72.94	10.86			20.35	21.09		
		Additional Voice Grade COCI in combination - per month			UNCVX	1D1VG	0.91	5.70	4.42								
		Nonrecurring Currently Combined Network Elements Switch -As-Is Charge			UNC1X	UNCCC		52.73	24.62	9.12	9.12			20.35	21.09		
	EXTENDED 4-WIRE 56 KBPS EXTENDED DIGITAL LOOP WITH DEDICATED DS1 INTEROFFICE TRANSPORT																
		First 4-Wire 56Kbps Digital Grade Loop in Combination - Zone 1		1	UNCDX	UDL56	31.10	108.76	35.47	72.94	10.86			20.35	21.09		
		First 4-Wire 56Kbps Digital Grade Loop in Combination - Zone 2		2	UNCDX	UDL56	40.61	108.76	35.47	72.94	10.86			20.35	21.09		
		First 4-Wire 56Kbps Digital Grade Loop in Combination - Zone 3		3	UNCDX	UDL56	53.11	108.76	35.47	72.94	10.86			20.35	21.09		
		Interoffice Transport - Dedicated - DS1 combination - Per Mile Per Month			UNC1X	1L5XX	0.3562										
		Interoffice Transport - Dedicated - DS1 - combination Facility Termination Per Month			UNC1X	U1TF1	77.86	171.24	113.12	70.07	30.90			20.35	21.09		
		1/0 Channel System in combination Per Month			UNC1X	MQ1	80.77	105.76	14.48	3.04	2.74						
		OCU-DP COCI (data) per month (2.4-64kbs)			UNCDX	1D1DD	0.91	5.70	4.42								
		Additional 4-Wire 56Kbps Digital Grade Loop in same DS1 Interoffice Transport Combination - Zone 1		1	UNCDX	UDL56	31.10	108.76	35.47	72.94	10.86			20.35	21.09		
		Additional 4-Wire 56Kbps Digital Grade Loop in same DS1 Interoffice Transport Combination - Zone 2		2	UNCDX	UDL56	40.61	108.76	35.47	72.94	10.86			20.35	21.09		
		Additional 4-Wire 56Kbps Digital Grade Loop in same DS1 Interoffice Transport Combination - Zone 3		3	UNCDX	UDL56	53.11	108.76	35.47	72.94	10.86			20.35	21.09		
		Additional OCU-DP COCI (data) - in combination per month (2.4-64kbs)			UNCDX	1D1DD	0.91	5.70	4.42								
		Nonrecurring Currently Combined Network Elements Switch -As-Is Charge			UNC1X	UNCCC		52.73	24.62	9.12	9.12			20.35	21.09		
	EXTENDED 4-WIRE 64 KBPS EXTENDED DIGITAL LOOP WITH DEDICATED DS1 INTEROFFICE TRANSPORT																
		First 4-Wire 64Kbps Digital Grade Loop in Combination - Zone 1		1	UNCDX	UDL64	31.10	108.76	35.47	72.94	10.86			20.35	21.09		
		First 4-Wire 64Kbps Digital Grade Loop in Combination - Zone 2		2	UNCDX	UDL64	40.61	108.76	35.47	72.94	10.86			20.35	21.09		
		First 4-Wire 64Kbps Digital Grade Loop in Combination - Zone 3		3	UNCDX	UDL64	53.11	108.76	35.47	72.94	10.86			20.35	21.09		
		Interoffice Transport - Dedicated - DS1 combination - Per Mile Per Month			UNC1X	1L5XX	0.3562										
		interoffice Transport - Dedicated - DS1 combination - Facility Termination Per Month			UNC1X	U1TF1	77.86	171.24	113.12	70.07	30.90			20.35	21.09		
		1/0 Channel System in combination Per Month			UNC1X	MQ1	80.77	105.76	14.48	3.04	2.74						
		OCU-DP COCI (data) - in combination - per month (2.4-64kbs)			UNCDX	1D1DD	0.91	5.70	4.42								
		Additional 4-Wire 64Kbps Digital Grade Loop in same DS1 Interoffice Transport Combination - Zone 1		1	UNCDX	UDL64	31.10	108.76	35.47	72.94	10.86			20.35	21.09		
		Additional 4-Wire 64Kbps Digital Grade Loop in same DS1 Interoffice Transport Combination - Zone 2		2	UNCDX	UDL64	40.61	108.76	35.47	72.94	10.86			20.35	21.09		
		Additional 4-Wire 64Kbps Digital Grade Loop in same DS1 Interoffice Transport Combination - Zone 3		3	UNCDX	UDL64	53.11	108.76	35.47	72.94	10.86			20.35	21.09		

UNBUNDLED NETWORK ELEMENTS - Tennessee														Attachment: 2		Exhibit: A	
CATEGORY		RATE ELEMENTS	Interim	Zone	BCS	USOC	RATES ($)					Svc Order Submitted Elec per LSR	Svc Order Submitted Manually per LSR	Incremental Charge - Manual Svc Order vs. Electronic-1st	Incremental Charge - Manual Svc Order vs. Electronic-Add'l	Incremental Charge - Manual Svc Order vs. Electronic-Disc 1st	Incremental Charge - Manual Svc Order vs. Electronic-Disc Add'l
							Rec	Nonrecurring		Nonrecurring Disconnect		OSS Rates ($)					
								First	Add'l	First	Add'l	SOMEC	SOMAN	SOMAN	SOMAN	SOMAN	SOMAN
		Additional OCU-DP COCI (data) - in combination - per month (2.4-64kbs)			UNCDX	1D1DD	0.91	5.70	4.42								
		Nonrecurring Currently Combined Network Elements Switch -As-Is Charge			UNC1X	UNCCC		52.73	24.62	9.12	9.12			20.35	21.09		
	EXTENDED 4-WIRE DS1 DIGITAL EXTENDED LOOP WITH DEDICATED DS1 INTEROFFICE TRANSPORT																
		4-Wire DS1 Digital Loop in Combination - Zone 1		1	UNC1X	USLXX	57.73	228.40	161.74	79.87	24.88						
		4-Wire DS1 Digital Loop in Combination - Zone 2		2	UNC1X	USLXX	75.40	228.40	161.74	79.87	24.88						
		4-Wire DS1 Digital Loop in Combination - Zone 3		3	UNC1X	USLXX	98.59	228.40	161.74	79.87	24.88						
		Interoffice Transport - Dedicated - DS1 combination - Per Mile Per Month			UNC1X	1L5XX	0.3562										
		Interoffice Transport - Dedicated - DS1 combination - Facility Termination Per Month			UNC1X	U1TF1	77.86	171.24	113.12	70.07	30.90			20.35	21.09		
		Nonrecurring Currently Combined Network Elements Switch -As-Is Charge			UNC1X	UNCCC		52.73	24.62	9.12	9.12			20.35	21.09		
	EXTENDED 4-WIRE DS1 DIGITAL EXTENDED LOOP WITH DEDICATED DS3 INTEROFFICE TRANSPORT																
		First DS1Loop in Combination - Zone 1		1	UNC1X	USLXX	57.73	228.40	161.74	79.87	24.88			20.35	21.09		
		First DS1Loop in Combination - Zone 2		2	UNC1X	USLXX	75.40	228.40	161.74	79.87	24.88			20.35	21.09		
		First DS1Loop in Combination - Zone 3		3	UNC1X	USLXX	98.59	228.40	161.74	79.87	24.88			20.35	21.09		
		Interoffice Transport - Dedicated - DS3 combination - Per Mile Per Month			UNC3X	1L5XX	2.34										
		Interoffice Transport - Dedicated - DS3 - Facility Termination per month			UNC3X	U1TF3	854.97	482.01	153.81	64.43	35.43			36.84	36.84		
		3/1Channel System in combination per month			UNC3X	MQ3	222.98	156.02	49.41	17.12	6.77						
		DS1 COCI in combination per month			UNC1X	UC1D1	17.58	5.70	4.42								
		Additional DS1Loop in DS3 Interoffice Transport Combination - Zone 1		1	UNC1X	USLXX	57.73	228.40	161.74	79.87	24.88			20.35	21.09		
		Additional DS1Loop in DS3 Interoffice Transport Combination - Zone 2		2	UNC1X	USLXX	75.40	228.40	161.74	79.87	24.88			20.35	21.09		
		Additional DS1Loop in DS3 Interoffice Transport Combination - Zone 3		3	UNC1X	USLXX	98.59	228.40	161.74	79.87	24.88			20.35	21.09		
		Additoinal DS1 COCI in combination per month			UNC1X	UC1D1	17.58	5.70	4.42								
		Nonrecurring Currently Combined Network Elements Switch -As-Is Charge			UNC3X	UNCCC		52.73	24.62	9.12	9.12			20.35	21.09		
	EXTENDED 2-WIRE VOICE GRADE EXTENDED LOOP/ 2 WIRE VOICE GRADE INTEROFFICE TRANSPORT																
		2-WireVG Loop in combination - Zone 1		1	UNCVX	UEAL2	16.56	108.76	35.47	72.94	10.86						
		2-WireVG Loop in combination - Zone 2		2	UNCVX	UEAL2	21.63	108.76	35.47	72.94	10.86						
		2-WireVG Loop in combination - Zone 3		3	UNCVX	UEAL2	28.28	108.76	35.47	72.94	10.86						
		Interoffice Transport - 2-wire VG - Dedicated- Per Mile Per Month			UNCVX	1L5XX	0.0174										
		Interoffice Transport - 2-wire VG - Dedicated - Facility Termination per month			UNCVX	U1TV2	21.79	79.83	44.08	69.32	31.00			20.35	21.09		
		Nonrecurring Currently Combined Network Elements Switch -As-Is Charge			UNCVX	UNCCC		52.73	24.62	9.12	9.12			20.35	21.09		
	EXTENDED 4-WIRE VOICE GRADE EXTENDED LOOP/ 4 WIRE VOICE GRADE INTEROFFICE TRANSPORT																
		4-WireVG Loop in combination - Zone 1		1	UNCVX	UEAL4	24.70	108.76	35.47	72.94	10.86						
		4-WireVG Loop in combination - Zone 2		2	UNCVX	UEAL4	32.26	108.76	35.47	72.94	10.86						
		4-WireVG Loop in combination - Zone 3		3	UNCVX	UEAL4	42.18	108.76	35.47	72.94	10.86						
		Interoffice Transport - 4-wire VG - Dedicated - Per Mile Per Month			UNCVX	1L5XX	0.0174										
		Interoffice Transport - 4-wire VG - Dedicated - Facility Termination per month			UNCVX	U1TV4	27.30	79.83	44.08	69.32	31.00			20.35	21.09		
		Nonrecurring Currently Combined Network Elements Switch -As-Is Charge			UNCVX	UNCCC		52.73	24.62	9.12	9.12			20.35	21.09		
	EXTENDED DS3 DIGITAL EXTENDED LOOP WITH DEDICATED DS3 INTEROFFICE TRANSPORT																
		DS3 Local Loop in combination - per mile per month			UNC3X	1L5ND	9.19										
		DS3 Local Loop in combination - Facility Termination per month			UNC3X	UE3PX	373.47	240.23	180.87	106.78	45.24						
		Interoffice Transport - Dedicated - DS3 - Per Mile per month			UNC3X	1L5XX	2.34										

UNBUNDLED NETWORK ELEMENTS - Tennessee														Attachment: 2		Exhibit: A	
CATEGORY		RATE ELEMENTS	Interim	Zone	BCS	USOC	RATES ($)					Svc Order Submitted Elec per LSR	Svc Order Submitted Manually per LSR	Incremental Charge - Manual Svc Order vs. Electronic-1st	Incremental Charge - Manual Svc Order vs. Electronic-Add'l	Incremental Charge - Manual Svc Order vs. Electronic-Disc 1st	Incremental Charge - Manual Svc Order vs. Electronic-Disc Add'l
							Rec	Nonrecurring		Nonrecurring Disconnect		OSS Rates ($)					
								First	Add'l	First	Add'l	SOMEC	SOMAN	SOMAN	SOMAN	SOMAN	SOMAN
		Interoffice Transport - Dedicated - DS3 combination - Facility Termination per month			UNC3X	U1TF3	854.97	482.01	153.81	64.43	35.43			36.84	36.84		
		Nonrecurring Currently Combined Network Elements Switch -As-Is Charge			UNC3X	UNCCC		52.73	24.62	9.12	9.12			36.84	36.84		
	EXTENDED STS-1 DIGITAL EXTENDED LOOP WITH DEDICATED STS-1 INTEROFFICE TRANSPORT																
		STS-1 Local Lolp in combination - per mile per month			UNCSX	1L5ND	9.19										
		STS-1 Local Loop in combination - Facility Termination per month			UNCSX	UDLS1	394.56	240.23	180.87	106.78	45.24						
		Interoffice Transport - Dedicated - STS-1 combination - per mile per month			UNCSX	1L5XX	2.34										
		Interoffice Transport - Dedicated - STS-1 combination - Facility Termination per month			UNCSX	U1TFS	849.30	482.01	153.81	64.43	35.43			36.84	36.84		
		Nonrecurring Currently Combined Network Elements Switch -As-Is Charge			UNCSX	UNCCC		52.73	24.62	9.12	9.12			36.84	36.84		
	EXTENDED 2-WIRE ISDN EXTENDED LOOP WITH DS1 INTEROFFICE TRANSPORT																
		First 2-Wire ISDN Loop in Combination - Zone 1		1	UNCNX	U1L2X	22.22	108.76	35.47	72.94	10.86			20.35	21.09		
		First 2-Wire ISDN Loop in Combination - Zone 2		2	UNCNX	U1L2X	29.02	108.76	35.47	72.94	10.86			20.35	21.09		
		First 2-Wire ISDN Loop in Combination - Zone 3		3	UNCNX	U1L2X	37.95	108.76	35.47	72.94	10.86			20.35	21.09		
		Interoffice Transport - Dedicated - DS1 combination - per mile per month			UNC1X	1L5XX	0.3562										
		Interoffice Transport - Dedicated - DS1 combination - Facility Termination per month			UNC1X	U1TF1	77.86	171.24	113.12	70.07	30.90			20.35	21.09		
		1/0 Channel System in combination - per month			UNC1X	MQ1	80.77	105.76	14.48	3.04	2.74						
		2-wire ISDN COCI (BRITE) - in combination - per month			UNCNX	UC1CA	3.24	5.70	4.42								
		Additional 2-wire ISDN Loop in same DS1Interoffice Transport Combination - Zone 1		1	UNCNX	U1L2X	22.22	108.76	35.47	72.94	10.86			20.35	21.09		
		Additional 2-wire ISDN Loop in same DS1Interoffice Transport Combination - Zone 2		2	UNCNX	U1L2X	29.02	108.76	35.47	72.94	10.86			20.35	21.09		
		Additional 2-wire ISDN Loop in same DS1Interoffice Transport Combination - Zone 3		3	UNCNX	U1L2X	37.95	108.76	35.47	72.94	10.86			20.35	21.09		
		Additional 2-wire ISDN COCI (BRITE) - in combination- per month			UNCNX	UC1CA	3.24	5.70	4.42								
		Nonrecurring Currently Combined Network Elements Switch -As-Is Charge			UNC1X	UNCCC		52.73	24.62	9.12	9.12			20.35	21.09		
	EXTENDED 4-WIRE DS1 DIGITAL EXTENDED LOOP WITH DEDICATED STS-1 INTEROFFICE TRANSPORT																
		First DS1 Loop Combination - Zone 1		1	UNC1X	USLXX	57.73	228.40	161.74	79.87	24.88			20.35	21.09		
		First DS1 Loop Combination - Zone 2		2	UNC1X	USLXX	75.40	228.40	161.74	79.87	24.88			20.35	21.09		
		First DS1 Loop Combination - Zone 3		3	UNC1X	USLXX	98.59	228.40	161.74	79.87	24.88			20.35	21.09		
		Interoffice Transport - Dedicated - STS-1 combination - Per Mile Per Month			UNCSX	1L5XX	2.34										
		Interoffice Transport - Dedicated - STS-1 combination - Facility Termination per month			UNCSX	U1TFS	849.30	482.01	153.81	64.43	35.43			36.84	36.84		
		3/1 Channel System in combination per month			UNCSX	MQ3	222.98	156.02	49.41	17.12	6.77						
		DS1 COCI in combination per month			UNC1X	UC1D1	17.58	5.70	4.42								
		Additional DS1Loop in the same STS-1 Interoffice Transport Combination - Zone 1		1	UNC1X	USLXX	57.73	228.40	161.74	79.87	24.88			20.35	21.09		
		Additional DS1Loop in the same STS-1 Interoffice Transport Combination - Zone 2		2	UNC1X	USLXX	75.40	228.40	161.74	79.87	24.88			20.35	21.09		
		Additional DS1Loop in the same STS-1 Interoffice Transport Combination - Zone 3		3	UNC1X	USLXX	98.59	228.40	161.74	79.87	24.88			20.35	21.09		
		DS1 COCI in combination per month			UNC1X	UC1D1	17.58	5.70	4.42								
		Nonrecurring Currently Combined Network Elements Switch -As-Is Charge			UNCSX	UNCCC		52.73	24.62	9.12	9.12			36.84	36.84		
	EXTENDED 4-WIRE 56 KBPS DIGITAL EXTENDED LOOP WITH 56 KBPS INTEROFFICE TRANSPORT																
		4-wire 56 kbps Local Loop in combination - Zone 1		1	UNCDX	UDL56	31.10	108.76	35.47	72.94	10.86						
		4-wire 56 kbps Local Loop in combination - Zone 2		2	UNCDX	UDL56	40.61	108.76	35.47	72.94	10.86						
		4-wire 56 kbps Local Loop in combination - Zone 3		3	UNCDX	UDL56	53.11	108.76	35.47	72.94	10.86						
		Interoffice Transport - Dedicated - 4-wire 56 kbps combination - Per Mile per month			UNCDX	1L5XX	0.0174										

UNBUNDLED NETWORK ELEMENTS - Tennessee														Attachment: 2		Exhibit: A	
CATEGORY		RATE ELEMENTS	Interim	Zone	BCS	USOC	RATES ($)					Svc Order Submitted Elec per LSR	Svc Order Submitted Manually per LSR	Incremental Charge - Manual Svc Order vs. Electronic-1st	Incremental Charge - Manual Svc Order vs. Electronic-Add'l	Incremental Charge - Manual Svc Order vs. Electronic-Disc 1st	Incremental Charge - Manual Svc Order vs. Electronic-Disc Add'l
							Rec	Nonrecurring		Nonrecurring Disconnect		OSS Rates ($)					
								First	Add'l	First	Add'l	SOMEC	SOMAN	SOMAN	SOMAN	SOMAN	SOMAN
		Interoffice Transport - Dedicated - 4-wire 56 kbps combination - Facility Termination per month			UNCDX	U1TD5	21.19	79.83	44.08	69.32	31.00			20.35	21.09		
		Nonrecurring Currently Combined Network Elements Switch -As-Is Charge			UNCDX	UNCCC		52.73	24.62	9.12	9.12			20.35	21.09		
	EXTENDED 4-WIRE 64 KBPS DIGITAL EXTENDED LOOP WITH 64 KBPS INTEROFFICE TRANSPORT																
		4-wire 64 kbps Lcoal Loop in Combination - Zone 1		1	UNCDX	UDL64	31.10	108.76	35.47	72.94	10.86						
		4-wire 64 kbps Lcoal Loop in Combination - Zone 2		2	UNCDX	UDL64	40.61	108.76	35.47	72.94	10.86						
		4-wire 64 kbps Lcoal Loop in Combination - Zone 3		3	UNCDX	UDL64	53.11	108.76	35.47	72.94	10.86						
		Interoffice Transport - Dedicated - 4-wire 64 kbps combination - Per Mile per month			UNCDX	1L5XX	0.0174										
		Interoffice Transport - Dedicated - 4-wire 64 kbps combination - Facility Termination per month			UNCDX	U1TD6	21.19	79.83	44.08	69.32	31.00			20.35	21.09		
		Nonrecurring Currently Combined Network Elements Switch -As-Is Charge			UNCDX	UNCCC		52.73	24.62	9.12	9.12			20.35	21.09		
	EXTENDED 2-WIRE VOICE GRADE LOOP WITH DS1 INTEROFFICE TRANSPORT w/ 3/1 MUX																
		First 2-wire VG Loop (SL2) in Combination - Zone 1		1	UNCVX	UEAL2	16.56	108.76	35.47	72.94	10.86			20.35	21.09		
		First 2-wire VG Loop (SL2) in Combination - Zone 2		2	UNCVX	UEAL2	21.63	108.76	35.47	72.94	10.86			20.35	21.09		
		First 2-wire VG Loop (SL2) in Combination - Zone 3		3	UNCVX	UEAL2	28.28	108.76	35.47	72.94	10.86			20.35	21.09		
		First Interoffice Transport - Dedicated - DS1 combination - Per Mile			UNC1X	1L5XX	0.3562										
		First Interoffice Transport - Dedicated - DS1 combination - Facility Termination per month			UNC1X	U1TF1	77.86	171.24	113.12	70.07	30.90			20.35	21.09		
		Per each DS1 Channelization System Per Month			UNC1X	MQ1	80.77	105.76	14.48	3.04	2.74						
		Per each Voice Grade COCI - Per Month per month			UNCVX	1D1VG	0.91	5.70	4.42								
		3/1 Channel System in combination per month			UNC3X	MQ3	222.98	156.02	49.41	17.12	6.77			36.84	36.84		
		Per each DS1 COCI in combination per month			UNC1X	UC1D1	17.58	5.70	4.42								
		Each Additional 2-Wire VG Loop(SL 2) in the same DS1 Interoffice Transport Combination - Zone 1		1	UNCVX	UEAL2	16.56	108.76	35.47	72.94	10.86			20.35	21.09		
		Each Additional 2-Wire VG Loop(SL2) in the same DS1 Interoffice Transport Combination - Zone 2		2	UNCVX	UEAL2	21.63	108.76	35.47	72.94	10.86			20.35	21.09		
		Each Additional 2-Wire VG Loop(SL2) in the same DS1 Interoffice Transport Combination - Zone 3		3	UNCVX	UEAL2	28.28	108.76	35.47	72.94	10.86			20.35	21.09		
		Each Additional Voice Grade COCI in combination - per month			UNCVX	1D1VG	0.91	5.70	4.42								
		Each Additional DS1 Interoffice Channel per mile in same 3/1 Channel System per month			UNC1X	1L5XX	0.3562										
		Each Additional DS1 Interoffice Channel Facility Termination in same 3/1 Channel System per month			UNC1X	U1TF1	77.86	171.24	113.12	70.07	30.90			20.35	21.09		
		Each Additional DS1 COCI combination per month			UNC1X	UC1D1	17.58	5.70	4.42								
		Nonrecurring Currently Combined Network Elements Switch -As-Is Charge			UNC1X	UNCCC		52.73	24.62	9.12	9.12			20.35	21.09		
	EXTENDED 4-WIRE VOICE GRADE LOOP WITH DEDICATED DS1 INTEROFFICE TRANSPORT w/ 3/1 MUX																
		First 4-Wire Analog Voice Grade Local Loop in Combination - Zone 1		1	UNCVX	UEAL4	24.70	108.76	35.47	72.94	10.86			20.35	21.09		
		First 4-Wire Analog Voice Grade Local Loop in Combination - Zone 2		2	UNCVX	UEAL4	32.26	108.76	35.47	72.94	10.86			20.35	21.09		
		First 4-Wire Analog Voice Grade Local Loop in Combination - Zone 3		3	UNCVX	UEAL4	42.18	108.76	35.47	72.94	10.86			20.35	21.09		
		First Interoffice Transport - Dedicated - DS1 combination - Per Mile Per Month			UNC1X	1L5XX	0.3562										
		First Interoffice Transport - Dedicated - DS1 - Facility Termination Per Month			UNC1X	U1TF1	77.86	171.24	113.12	70.07	30.90			20.35	21.09		
		Per each 1/0 Channel System in combination Per Month			UNC1X	MQ1	80.77	105.76	14.48	3.04	2.74						
		Per each Voice Grade COCI in combination - per month			UNCVX	1D1VG	0.91	5.70	4.42								
		3/1 Channel System in combination per month			UNC3X	MQ3	222.98	156.02	49.41	17.12	6.77			36.84	36.84		
		Per each DS1 COCI in combination per month			UNC1X	UC1D1	17.58	5.70	4.42								
		Additional 4-Wire Analog Voice Grade Loop in same DS1 Interoffice Transport Combination - Zone 1		1	UNCVX	UEAL4	24.70	108.76	35.47	72.94	10.86			20.35	21.09		
		Additional 4-Wire Analog Voice Grade Loop in same DS1 Interoffice Transport Combination - Zone 2		2	UNCVX	UEAL4	32.26	108.76	35.47	72.94	10.86			20.35	21.09		

UNBUNDLED NETWORK ELEMENTS - Tennessee														Attachment: 2		Exhibit: A	
CATEGORY		RATE ELEMENTS	Interim	Zone	BCS	USOC	RATES ($)					Svc Order Submitted Elec per LSR	Svc Order Submitted Manually per LSR	Incremental Charge - Manual Svc Order vs. Electronic-1st	Incremental Charge - Manual Svc Order vs. Electronic-Add'l	Incremental Charge - Manual Svc Order vs. Electronic-Disc 1st	Incremental Charge - Manual Svc Order vs. Electronic-Disc Add'l
							Rec	Nonrecurring		Nonrecurring Disconnect		OSS Rates ($)					
								First	Add'l	First	Add'l	SOMEC	SOMAN	SOMAN	SOMAN	SOMAN	SOMAN
		Additional 4-Wire Analog Voice Grade Loop in same DS1 Interoffice Transport Combination - Zone 3		3	UNCVX	UEAL4	42.18	108.76	35.47	72.94	10.86			20.35	21.09		
		Each Additional DS1 Interoffice Channel per mile in same 3/1 Channel System per month			UNC1X	1L5XX	0.3562										
		Each Additional DS1 Interoffice Channel Facility Termination in same 3/1 Channel System per month			UNC1X	U1TF1	77.86	171.24	113.12	70.07	30.90			20.35	21.09		
		Additional Voice Grade COCI - in combination - per month			UNCVX	1D1VG	0.91	5.70	4.42								
		Nonrecurring Currently Combined Network Elements Switch -As-Is Charge			UNC1X	UNCCC		52.73	24.62	9.12	9.12			20.35	21.09		
	EXTENDED 4-WIRE 56 KBPS DIGITAL LOOP WITH DEDICATED DS1 INTEROFFICE TRANSPORT w/ 3/1 MUX																
		First 4-Wire 56Kbps Digital Grade Local Loop in Combination - Zone 1		1	UNCDX	UDL56	31.10	108.76	35.47	72.94	10.86			20.35	21.09		
		First 4-Wire 56Kbps Digital Grade Local Loop in Combination - Zone 2		2	UNCDX	UDL56	40.61	108.76	35.47	72.94	10.86			20.35	21.09		
		First 4-Wire 56Kbps Digital Grade Local Loop in Combination - Zone 3		3	UNCDX	UDL56	53.11	108.76	35.47	72.94	10.86			20.35	21.09		
		First Interoffice Transport - Dedicated - DS1 combination - Per Mile Per Month			UNC1X	1L5XX	0.3562										
		First Interoffice Transport - Dedicated - DS1 - combination Facility Termination Per Month			UNC1X	U1TF1	77.86	171.24	113.12	70.07	30.90			20.35	21.09		
		Per each 1/0 Channel System in combination Per Month			UNC1X	MQ1	80.77	105.76	14.48	3.04	2.74						
		Per each OCU-DP COCI (data) COCI per month (2.4-64kbs)			UNCDX	1D1DD	0.91	5.70	4.42								
		3/1 Channel System in combination per month			UNC3X	MQ3	222.98	156.02	49.41	17.12	6.77			36.84	36.84		
		Per each DS1 COCI in combination per month			UNC1X	UC1D1	17.58	5.70	4.42								
		Additional 4-Wire 56Kbps Digital Grade Loop in same DS1 Interoffice Transport Combination - Zone 1		1	UNCDX	UDL56	31.10	108.76	35.47	72.94	10.86			20.35	21.09		
		Additional 4-Wire 56Kbps Digital Grade Loop in same DS1 Interoffice Transport Combination - Zone 2		2	UNCDX	UDL56	40.61	108.76	35.47	72.94	10.86			20.35	21.09		
		Additional 4-Wire 56Kbps Digital Grade Loop in same DS1 Interoffice Transport Combination - Zone 3		3	UNCDX	UDL56	53.11	108.76	35.47	72.94	10.86			20.35	21.09		
		OCU-DP COCI (data) COCI in combination per month (2.4-64kbs)			UNCDX	1D1DD	0.91	5.70	4.42								
		Each Additional DS1 Interoffice Channel per mile in same 3/1 Channel System per month			UNC1X	1L5XX	0.3562										
		Each Additional DS1 Interoffice Channel Facility Termination in same 3/1 Channel System per month			UNC1X	U1TF1	77.86	171.24	113.12	70.07	30.90			20.35	21.09		
		Each Additional DS1 COCI in the same 3/1 channel system combination per month			UNC1X	UC1D1	17.58	5.70	4.42								
		Nonrecurring Currently Combined Network Elements Switch -As-Is Charge			UNC1X	UNCCC		52.73	24.62	9.12	9.12			20.35	21.09		
	EXTENDED 4-WIRE 64 KBPS DIGITAL LOOP WITH DEDICATED DS1 INTEROFFICE TRANSPORT w/ 3/1 MUX																
		First 4-Wire 64Kbps Digital Grade Loop in a DS1 Interoffice Transport Combination - Zone 1		1	UNCDX	UDL64	31.10	108.76	35.47	72.94	10.86			20.35	21.09		
		First 4-Wire 64Kbps Digital Grade Loop in a DS1 Interoffice Transport Combination - Zone 2		2	UNCDX	UDL64	40.61	108.76	35.47	72.94	10.86			20.35	21.09		
		First 4-Wire 64Kbps Digital Grade Loop in a DS1 Interoffice Transport Combination - Zone 3		3	UNCDX	UDL64	53.11	108.76	35.47	72.94	10.86			20.35	21.09		
		First Interoffice Transport - Dedicated - DS1 combination - Per Mile Per Month			UNC1X	1L5XX	0.3562										
		First Interoffice Transport - Dedicated - DS1 combination - Facility Termination Per Month			UNC1X	U1TF1	77.86	171.24	113.12	70.07	30.90			20.35	21.09		
		Per each Channel System 1/0 in combination Per Month			UNC1X	MQ1	80.77	105.76	14.48	3.04	2.74						
		Per each OCU-DP COCI (data) in combination - per month (2.4-64kbs)			UNCDX	1D1DD	0.91	5.70	4.42								
		3/1 Channel System in combination per month			UNC3X	MQ3	222.98	156.02	49.41	17.12	6.77			36.84	36.84		
		Per each DS1 COCI in combination per month			UNC1X	UC1D1	17.58	5.70	4.42								
		Additional 4-Wire 64Kbps Digital Grade Loop in same DS1 Interoffice Transport Combination - Zone 1		1	UNCDX	UDL64	31.10	108.76	35.47	72.94	10.86			20.35	21.09		

UNBUNDLED NETWORK ELEMENTS - Tennessee														Attachment: 2		Exhibit: A	
CATEGORY		RATE ELEMENTS	Interim	Zone	BCS	USOC	RATES ($)					Svc Order Submitted Elec per LSR	Svc Order Submitted Manually per LSR	Incremental Charge - Manual Svc Order vs. Electronic-1st	Incremental Charge - Manual Svc Order vs. Electronic-Add'l	Incremental Charge - Manual Svc Order vs. Electronic-Disc 1st	Incremental Charge - Manual Svc Order vs. Electronic-Disc Add'l
							Rec	Nonrecurring		Nonrecurring Disconnect		OSS Rates ($)					
								First	Add'l	First	Add'l	SOMEC	SOMAN	SOMAN	SOMAN	SOMAN	SOMAN
		Additional 4-Wire 64Kbps Digital Grade Loop in same DS1 Interoffice Transport Combination - Zone 2		2	UNCDX	UDL64	40.61	108.76	35.47	72.94	10.86			20.35	21.09		
		Additional 4-Wire 64Kbps Digital Grade Loop in same DS1 Interoffice Transport Combination - Zone 3		3	UNCDX	UDL64	53.11	108.76	35.47	72.94	10.86			20.35	21.09		
		Additional OCU-DP COCI (data) - DS1 to DS0 Channel System combination - per month (2.4-64kbs)			UNCDX	1D1DD	0.91	5.70	4.42								
		Each Additional DS1 Interoffice Channel per mile in same 3/1 Channel System per month			UNC1X	1L5XX	0.3562										
		Each Additional DS1 Interoffice Channel Facility Termination in same 3/1 Channel System per month			UNC1X	U1TF1	77.86	171.24	113.12	70.07	30.90			20.35	21.09		
		Each Additional DS1 COCI in the same 3/1 channel system combination per month			UNC1X	UC1D1	17.58	5.70	4.42								
		Nonrecurring Currently Combined Network Elements Switch -As-Is Charge			UNC1X	UNCCC		52.73	24.62	9.12	9.12			20.35	21.09		
	EXTENDED 2-WIRE ISDN LOOP WITH DS1 INTEROFFICE TRANSPORT w/ 3/1 MUX																
		First 2-Wire ISDN Loop in a DS1 Interoffice Combination Transport - Zone 1		1	UNCNX	U1L2X	22.22	108.76	35.47	72.94	10.86			20.35	21.09		
		First 2-Wire ISDN Loop in a DS1 Interoffice Combination Transport - Zone 2		2	UNCNX	U1L2X	29.02	108.76	35.47	72.94	10.86			20.35	21.09		
		First 2-Wire ISDN Loop in a DS1 Interoffice Combination Transport - Zone 3		3	UNCNX	U1L2X	37.95	108.76	35.47	72.94	10.86			20.35	21.09		
		First Interoffice Transport - Dedicated - DS1 combination - Per Mile per month			UNC1X	1L5XX	0.3562										
		First Interoffice Transport - Dedicated - DS1 combination - Facility Termination per month			UNC1X	U1TF1	77.86	171.24	113.12	70.07	30.90			20.35	21.09		
		Per each Channel System 1/0 in combination - per month			UNC1X	MQ1	80.77	105.76	14.48	3.04	2.74						
		Per each 2-wire ISDN COCI (BRITE) in combination - per month			UNCNX	UC1CA	3.24	5.70	4.42								
		3/1 Channel System in combination per month			UNC3X	MQ3	222.98	156.02	49.41	17.12	6.77			36.84	36.84		
		Per each DS1 COCI in combination per month			UNC1X	UC1D1	17.58	5.70	4.42								
		Additional 2-wire ISDN Loop in same DS1Interoffice Transport Combination - Zone 1		1	UNCNX	U1L2X	22.22	108.76	35.47	72.94	10.86			20.35	21.09		
		Additional 2-wire ISDN Loop in same DS1Interoffice Transport Combination - Zone 2		2	UNCNX	U1L2X	29.02	108.76	35.47	72.94	10.86			20.35	21.09		
		Additional 2-wire ISDN Loop in same DS1Interoffice Transport Combination - Zone 3		3	UNCNX	U1L2X	37.95	108.76	35.47	72.94	10.86			20.35	21.09		
		Additional 2-wire ISDN COCI (BRITE) in same 1/0 channel system combination- per month			UNCNX	UC1CA	3.24	5.70	4.42								
		Each Additional DS1 Interoffice Channel per mile in same 3/1 Channel System per month			UNC1X	1L5XX	0.3562										
		Each Additional DS1 Interoffice Channel Facility Termination in same 3/1 Channel System per month			UNC1X	U1TF1	77.86	171.24	113.12	70.07	30.90			20.35	21.09		
		Each Additional DS1 COCI in the same 3/1 channel system combination per month			UNC1X	UC1D1	17.58	5.70	4.42								
		Nonrecurring Currently Combined Network Elements Switch -As-Is Charge			UNC1X	UNCCC		52.73	24.62	9.12	9.12			20.35	21.09		
	EXTENDED 4-WIRE DS1 LOOP WITH DEDICATED DS1 INTEROFFICE TRANSPORT w/ 3/1 MUX																
		First 4-wire DS1 Digital Lcoal Loop in Combination - Zone 1		1	UNC1X	USLXX	57.73	228.40	161.74	79.87	24.88						
		First 4-wire DS1 Digital Lcoal Loop in Combination - Zone 2		2	UNC1X	USLXX	75.40	228.40	161.74	79.87	24.88						
		First 4-wire DS1 Digital Lcoal Loop in Combination - Zone 3		3	UNC1X	USLXX	98.59	228.40	161.74	79.87	24.88						
		First Interoffice Transport - Dedicated - DS1 combination - Per Mile Per Month			UNC1X	1L5XX	0.3562										
		First Interoffice Transport - Dedicated - DS1 combination - Facility Termination Per Month			UNC1X	U1TF1	77.86	171.24	113.12	70.07	30.90			20.35	21.09		
		3/1 Channel System in combination per month			UNC3X	MQ3	222.98	156.02	49.41	17.12	6.77			36.84	36.84		
		Per each DS1 COCI combination per month			UNC1X	UC1D1	17.58	5.70	4.42								
		Each Additional DS1 Interoffice Channel per mile in same 3/1 Channel System per month			UNC1X	1L5XX	0.3562										

UNBUNDLED NETWORK ELEMENTS - Tennessee														Attachment: 2		Exhibit: A	
CATEGORY	RATE ELEMENTS	Interim	Zone	BCS	USOC	RATES ($)					Svc Order Submitted Elec per LSR	Svc Order Submitted Manually per LSR	Incremental Charge - Manual Svc Order vs. Electronic-1st	Incremental Charge - Manual Svc Order vs. Electronic-Add'l	Incremental Charge - Manual Svc Order vs. Electronic-Disc 1st	Incremental Charge - Manual Svc Order vs. Electronic-Disc Add'l
						Rec	Nonrecurring		Nonrecurring Disconnect		OSS Rates ($)					
							First	Add'l	First	Add'l	SOMEC	SOMAN	SOMAN	SOMAN	SOMAN	SOMAN
	Each Additional DS1 Interoffice Channel Facility Termination in same 3/1 Channel System per month			UNC1X	U1TF1	77.86	171.24	113.12	70.07	30.90			20.35	21.09		
	Each Additional DS1 COCI in the same 3/1 channel system combination per month			UNC1X	UC1D1	17.58	5.70	4.42								
	Additional 4-Wire DS1 Digital Local Loop in Combination - Zone 1		1	UNC1X	USLXX	57.73	228.40	161.74	79.87	24.88						
	Additional 4-Wire DS1 Digital Local Loop in Combination - Zone 2		2	UNC1X	USLXX	75.40	228.40	161.74	79.87	24.88						
	Additional 4-Wire DS1 Digital Local Loop in Combination - Zone 3		3	UNC1X	USLXX	98.59	228.40	161.74	79.87	24.88						
	Nonrecurring Currently Combined Network Elements Switch -As-Is Charge			UNC1X	UNCCC		52.73	24.62	9.12	9.12			20.35	21.09		
	EXTENDED 4-WIRE 56 KBPS DIGITAL EXTENDED LOOP WITH DS0 INTEROFFICE TRANSPORT															
	First 4-wire 56 kbps Local Loop in combination - Zone 1		1	UNCDX	UDL56	31.10	108.76	35.47	72.94	10.86						
	First 4-wire 56 kbps Local Loop in combination - Zone 2		2	UNCDX	UDL56	40.61	108.76	35.47	72.94	10.86						
	First 4-wire 56 kbps Local Loop in combination - Zone 3		3	UNCDX	UDL56	53.11	108.76	35.47	72.94	10.86						
	First 4-wiree 56 kbps Interoffice Transport - Dedicated - Per Mile per month			UNCDX	1L5XX	0.0174										
	First 4-wire 56 kbps Interoffice Transport - Dedicated - Facility Termination per month			UNCDX	U1TD5	21.19	79.83	44.08	69.32	31.00			20.35	21.09		
	Nonrecurring Currently Combined Network Elements Switch -As-Is Charge			UNCDX	UNCCC		52.73	24.62	9.12	9.12			20.35	21.09		
	EXTENDED 4-WIRE 64 KBPS DIGITAL EXTENDED LOOP WITH DS0 INTEROFFICE TRANSPORT															
	First 4-wire 64 kbps Local Loop in combination - Zone 1		1	UNCDX	UDL64	31.10	108.76	35.47	72.94	10.86						
	First 4-wire 64 kbps Local Loop in combination - Zone 2		2	UNCDX	UDL64	40.61	108.76	35.47	72.94	10.86						
	First 4-wire 64 kbps Local Loop in combination - Zone 3		3	UNCDX	UDL64	53.11	108.76	35.47	72.94	10.86						
	First I4-wire 65 kbps Interoffice Transport - Dedicated - Per Mile per month			UNCDX	1L5XX	0.0174										
	First 4-wire 64 kbps Interoffice Transport - Dedicated - Facility Termination per month			UNCDX	U1TD6	21.19	79.83	44.08	69.32	31.00			20.35	21.09		
	Nonrecurring Currently Combined Network Elements Switch -As-Is Charge			UNCDX	UNCCC		52.73	24.62	9.12	9.12			20.35	10.54		
ADDITIONAL NETWORK ELEMENTS																
	When used as a part of a currently combined facility, the non-recurrng charges do not apply, but a Switch As Is charge does apply.															
	When used as ordinarily combined network elements in All States, the non-recurring charges apply and the Switch As Is Charge does not.															
	Nonrecurring Currently Combined Network Elements "Switch As Is" Charge (One applies to each combination)															
	Nonrecurring Currently Combined Network Elements Switch -As-Is Charge - 2 wire/4-Wire VG			UNCVX	UNCCC		52.73	24.62	9.12	9.12			53.73	24.62		
	Nonrecurring Currently Combined Network Elements Switch -As-Is Charge - 56/64 kbps			UNCDX	UNCCC		52.73	24.62	9.12	9.12			20.35	10.54		
	Nonrecurring Currently Combined Network Elements Switch -As-Is Charge - DS1			UNC1X	UNCCC		52.73	24.62	9.12	9.12			53.73	24.62		
	Nonrecurring Currently Combined Network Elements Switch -As-Is Charge - DS3			UNC3X	UNCCC		52.73	24.62	9.12	9.12			53.73	24.62		
	Nonrecurring Currently Combined Network Elements Switch -As-Is Charge - STS1			UNCSX	UNCCC		52.73	24.62	9.12	9.12			53.73	24.62		
	Optional Features & Functions:															
	Clear Channel Capability Extended Frame Option - per DS1	I		U1TD1, ULDD1,UNC1X	CCOEF		0I	0I	0I	0I						
	Clear Channel Capability Super FrameOption - per DS1	i		U1TD1, ULDD1,UNC1X	CCOSF		0I	0I	0I	0I						
	Clear Channel Capability (SF/ESF) Option - Subsequent Activity - per DS1	I		ULDD1, U1TD1, UNC1X, USL	NRCCC		185.16S	23.85S	2.03S	0.79S			45.68	1.76		
	C-bit Parity Option - Subsequent Activity - per DS3	i		U1TD3, ULDD3, UE3, UNC3X	NRCC3		219.46S	7.68S	.7637S	OS			45.68	1.76		
	MULTIPLEXERS															
	DS1 to DS0 Channel System per month			UNC1X	MQ1	80.77	105.76	14.48	3.04	2.74			20.35	9.80		
	OCU-DP COCI (data) - DS1 to DS0 Channel System - per month (2.4-64kbs) used for a Local Loop			UDL	1D1DD	1.82	6.07	4.66						9.80		

UNBUNDLED NETWORK ELEMENTS - Tennessee														Attachment: 2		Exhibit: A	
CATEGORY		RATE ELEMENTS	Interim	Zone	BCS	USOC	RATES ($)					Svc Order Submitted Elec per LSR	Svc Order Submitted Manually per LSR	Incremental Charge - Manual Svc Order vs. Electronic-1st	Incremental Charge - Manual Svc Order vs. Electronic-Add'l	Incremental Charge - Manual Svc Order vs. Electronic-Disc 1st	Incremental Charge - Manual Svc Order vs. Electronic-Disc Add'l
							Rec	Nonrecurring		Nonrecurring Disconnect		OSS Rates ($)					
								First	Add'l	First	Add'l	SOMEC	SOMAN	SOMAN	SOMAN	SOMAN	SOMAN
		OCU-DP COCI (data) - DS1 to DS0 Channel System - per month (2.4-64kbs) used for connection to a channelized DS1 Local Channel in the same SWC as collocation			U1TUD	1D1DD	1.82	6.07	4.66								
		2-wire ISDN COCI (BRITE) - DS1 to DS0 Channel Systsem - per month for a Local Loop			UDN	UC1CA	3.10	6.07	4.66								
		2-wire ISDN COCI (BRITE) - DS1 to DS0 Channel Systsem - per month used for connection to a channelized DS1 Local Channel in the same SWC as collocation			U1TUB	UC1CA	3.10	6.07	4.66								
		Voice Grade COCI - DS1 to DS0 Channel System - per month used for a Local Loop			UEA	1D1VG	0.91	6.07	4.66								
		Voice Grade COCI - DS1 to DS0 Channel System - per month used for connection to a channelized DS1 Local Channel in the same SWC as collocation			U1TUC	1D1VG	0.91	6.07	4.66								
		DS3 to DS1 Channel System per month			UNC3X	MQ3	222.98	156.02	49.41	17.12	6.77			20.35	9.80		
		STS-1 to DS1 Channel System per month			UNCSX	MQ3	222.98	156.02	49.41	17.12	6.77			20.35	9.80		
		DS1 COCI used with Loop per month			USL	UC1D1	17.58	6.07	4.66								
		DS1 COCI (used for connection to a channelized DS1 Local Channel in the same SWC as collocation) per month			U1TUA	UC1D1	17.58	6.07	4.66								
		DS1 COCI used with Interoffice Channel per month			U1TD1	UC1D1	17.58	6.07	4.66								
		DS3 Interface Unit (DS1 COCI) used with Local Channel per month			ULDD1	UC1D1	17.58	6.07	4.66								
UNBUNDLED LOCAL EXCHANGE SWITCHING(PORTS)																	
	Exchange Ports																
	NOTE: Although the Port Rate includes all available features in GA, KY, LA & TN, the desired features will need to be ordered using retail USOCs																
	2-WIRE VOICE GRADE LINE PORT RATES (RES)																
		Exchange Ports - 2-Wire Analog Line Port- Res.			UEPSR	UEPRL	1.89	9.93	9.19	3.66	2.92			20.35	10.54	13.32	1.40
		Exchange Ports - 2-Wire Analog Line Port with Caller ID - Res.			UEPSR	UEPRC	1.89	9.93	9.19	3.66	2.92			20.35	10.54	13.32	1.40
		Exchange Ports - 2-Wire Analog Line Port outgoing only - Res.			UEPSR	UEPRO	1.89	9.93	9.19	3.66	2.92			20.35	10.54	13.32	1.40
		Exchange Ports - 2-Wire VG unbundled TN extended local dialing parity Port with Caller ID - Res.			UEPSR	UEPAQ	1.89	9.93	9.19	3.66	2.92			20.35	10.54	13.32	1.40
		Exchange Ports - 2-Wire VG unbundled Tennessee Area Plus with Caller ID - Res (AC7)			UEPSR	UEPAH	1.89	9.93	9.19	3.66	2.92			20.35	10.54	13.32	1.40
		Exchange Ports - 2-Wire VG unbundled Tennessee Area Calling port with Caller ID - Res (F2R)			UEPSR	UEPAK	1.89	9.93	9.19	3.66	2.92			20.35	10.54	13.32	1.40
		Exchange Ports - 2-Wire VG unbundled Tennessee Area Calling port with Caller ID - Res (TACER)			UEPSR	UEPAL	1.89	9.93	9.19	3.66	2.92			20.35	10.54	13.32	1.40
		Exchange Ports - 2-Wire VG unbundled Tennessee Area Calling port with Caller ID - Res (TACSR)			UEPSR	UEPAM	1.89	9.93	9.19	3.66	2.92			20.35	10.54	13.32	1.40
		Exchange Ports - 2-Wire VG unbundled Tennessee Area Calling port with Caller ID - Res (1MF2X)			UEPSR	UEPAN	1.89	9.93	9.19	3.66	2.92			20.35	10.54	13.32	1.40
		Exchange Ports - 2-Wire VG unbundled Tennessee Area Calling port with Caller ID - Res (2MR)			UEPSR	UEPAO	1.89	9.93	9.19	3.66	2.92			20.35	10.54	13.32	1.40
		Exchange Ports - 2-Wire VG unbundled res, low usage line port with Caller ID (LUM)			UEPSR	UEPAP	1.89	9.93	9.19	3.66	2.92			20.35	10.54	13.32	1.40
		Exchange Port - 2-Wire VG Tennessee Residence Dialing Plan without Caller ID			UEPSR	UEPWN	1.89	9.93	9.19	3.66	2.92			20.35	10.54	13.32	1.40
		Exchange Port - 2-Wire VG Tennessee Residence Area Plus without Caller ID			UEPSR	UEPRR	1.89	9.93	9.19	3.66	2.92			20.35	10.54	13.32	1.40
		2-Wire voice unbundled Low Usage Line Port without Caller ID Capability			UEPSR	UEPRT	1.89	9.93	9.19	3.66	2.92			20.35	10.54	13.32	1.40
		Subsequent Activity			UEPSR	USASC	0.00	0.00	0.00					20.35	10.54	13.32	1.40
	FEATURES																
		All Available Vertical Features			UEPSR	UEPVF	0.00	0.00	0.00					20.35	10.54	13.32	1.40
	2-WIRE VOICE GRADE LINE PORT RATES (BUS)																
		Exchange Ports - 2-Wire Analog Line Port without Caller ID - Bus			UEPSB	UEPBL	1.89	9.93	9.19	3.66	2.92			20.35	10.54	13.32	1.40

UNBUNDLED NETWORK ELEMENTS - Tennessee														Attachment: 2		Exhibit: A	
CATEGORY		RATE ELEMENTS	Interim	Zone	BCS	USOC	RATES ($)					Svc Order Submitted Elec per LSR	Svc Order Submitted Manually per LSR	Incremental Charge - Manual Svc Order vs. Electronic-1st	Incremental Charge - Manual Svc Order vs. Electronic-Add'l	Incremental Charge - Manual Svc Order vs. Electronic-Disc 1st	Incremental Charge - Manual Svc Order vs. Electronic-Disc Add'l
							Rec	Nonrecurring		Nonrecurring Disconnect		OSS Rates ($)					
								First	Add'l	First	Add'l	SOMEC	SOMAN	SOMAN	SOMAN	SOMAN	SOMAN
		Exchange Ports - 2-Wire VG unbundled Line Port with unbundled port with Caller+E484 ID - Bus.			UEPSB	UEPBC	1.89	9.93	9.19	3.66	2.92			20.35	10.54	13.32	1.40
		Exchange Ports - 2-Wire Analog Line Port outgoing only - Bus.			UEPSB	UEPBO	1.89	9.93	9.19	3.66	2.92			20.35	10.54	13.32	1.40
		Exchange Ports - 2-Wire VG unbundled TN extended local dialing parity Port with Caller ID - Bus.			UEPSB	UEPAV	1.89	9.93	9.19	3.66	2.92			20.35	10.54	13.32	1.40
		Exhange Ports - 2-Wire VG unbundled incoming only port with Caller ID - Bus			UEPSB	UEPB1	1.89	9.93	9.19	3.66	2.92			20.35	10.54	13.32	1.40
		Exchange Ports - 2-Wire VG unbundled TN Bus 2-Way Area Calling Port Economy Option - Bus (TACC1)			UEPSB	UEPAC	1.89	9.93	9.19	3.66	2.92			20.35	10.54	13.32	1.40
		Exchange Ports - 2-Wire VG unbundled TN Bus 2-Way Area Calling Port Standard Option - Bus (TACC2)			UEPSB	UEPAD	1.89	9.93	9.19	3.66	2.92			20.35	10.54	13.32	1.40
		Exchange Ports - 2-W VG unbundled TN Bus 2-Way Collierville & Memphis Local Calling Port - Bus (B2F)			UEPSB	UEPAE	1.89	9.93	9.19	3.66	2.92			20.35	10.54	13.32	1.40
		Exchange Ports - 2-W VG unbundled TN Bus 2-Way Collierville & Memphis Local Calling Port			UEPSB	UEPB2	1.89	9.93	9.19	3.66	2.92			20.35	10.54	13.32	1.40
		Exchange Ports - 2-W VG unbundled TN, Business Line Inward, Collierville & Memphis Local Calling Plan			UEPSB	UEPB3	1.89	9.93	9.19	3.66	2.92			20.35	10.54	13.32	1.40
		Exchange Ports - 2-Wire Voice Tennessee Business Dialing Plan without Caller ID			UEPSB	UEPWO	1.89	9.93	9.19	3.66	2.92			20.35	10.54	13.32	1.40
		2-Wire voice unbundled Incoming Only Port without Caller ID Capability			UEPSB	UEPBE	1.89	9.93	9.19	3.66	2.92			20.35	10.54	13.32	1.40
		Subsequent Activity			UEPSB	USASC	0.00	0.00	0.00					20.35	10.54	13.32	1.40
	FEATURES																
		All Available Vertical Features			UEPSB	UEPVF	0.00	0.00	0.00					20.35	10.54	13.32	1.40
	EXCHANGE PORT RATES (DID & PBX)																
		2-Wire VG Unbundled 2-Way PBX Trunk - Res			UEPSE	UEPRD	1.79	9.93	9.19	3.66	2.92			20.35	10.54	13.32	1.40
		2-Wire VG Line Side Unbundled 2-Way PBX Trunk - Bus			UEPSP	UEPPC	1.79	9.93	9.19	3.66	2.92			20.35	10.54	13.32	1.40
		2-Wire VG Line Side Unbundled Outward PBX Trunk - Bus			UEPSP	UEPPO	1.79	9.93	9.19	3.66	2.92			20.35	10.54	13.32	1.40
		2-Wire VG Line Side Unbundled Incoming PBX Trunk - Bus			UEPSP	UEPP1	1.79	9.93	9.19	3.66	2.92			20.35	10.54	13.32	1.40
		2-Wire Analog Long Distance Terminal PBX Trunk - Bus			UEPSP	UEPLD	1.79	9.93	9.19	3.66	2.92			20.35	10.54	13.32	1.40
		2-Wire Analog TN 2-Way Calling Plan PBX Trunk - Bus			UEPSP	UEPT2	1.79	9.93	9.19	3.66	2.92			20.35	10.54	13.32	1.40
		2-Wire TN Outward Calling Plan PBX Trunk - Bus			UEPSP	UEPTO	1.79	9.93	9.19	3.66	2.92			20.35	10.54	13.32	1.40
		2-Wire Voice Unbundled PBX LD Terminal Ports			UEPSP	UEPLD	1.79	9.93	9.19	3.66	2.92			20.35	10.54	13.32	1.40
		2-Wire Voice Unbundled 2-Way PBX Tennessee Calling Port			UEPSP	UEPT2	1.79	9.93	9.19	3.66	2.92			20.35	10.54	13.32	1.40
		2-Wire Voice Unbundled 1-Way Outgoing PBX Tennessee Calling Port			UEPSP	UEPTO	1.79	9.93	9.19	3.66	2.92			20.35	10.54	13.32	1.40
		2-Wire Vice Unbundled 2-Way PBX Usage Port			UEPSP	UEPXA	1.79	9.93	9.19	3.66	2.92			20.35	10.54	13.32	1.40
		2-Wire Voice Unbundled PBX Toll Terminal Hotel Ports			UEPSP	UEPXB	1.79	9.93	9.19	3.66	2.92			20.35	10.54	13.32	1.40
		2-Wire Voice Unbundled PBX LD DDD Terminals Port			UEPSP	UEPXC	1.79	9.93	9.19	3.66	2.92			20.35	10.54	13.32	1.40
		2-Wire Voice Unbundled PBX LD Terminal Switchboard Port			UEPSP	UEPXD	1.79	9.93	9.19	3.66	2.92			20.35	10.54	13.32	1.40
		2-Wire Voice Unbundled PBX LD Terminal Switchboard IDD Capable Port			UEPSP	UEPXE	1.79	9.93	9.19	3.66	2.92			20.35	10.54	13.32	1.40
		2-Wire Voice Unbundled 2-Way PBX Hotel/Hospital Economy Administrative Calling Port			UEPSP	UEPXL	1.79	9.93	9.19	3.66	2.92			20.35	10.54	13.32	1.40
		2-Wire Voice Unbundled 2-Way PBX Hotel/Hospital Economy Room Calling Port			UEPSP	UEPXM	1.79	9.93	9.19	3.66	2.92			20.35	10.54	13.32	1.40
		2-W Voice Unbundled 1-Way Out PBX Hotel/Hospital Economy Administrative Calling Port TN Calling Port			UEPSP	UEPXN	1.79	9.93	9.19	3.66	2.92			20.35	10.54	13.32	1.40
		2-Wire Voice Unbundled 1-Way Outgoing PBX Hotel/Hospital Discount Room Calling Port			UEPSP	UEPXO	1.79	9.93	9.19	3.66	2.92			20.35	10.54	13.32	1.40
		Unbundled Exchange Ports, PBX Trunk Combination, Collierville and Memphis Local Calling Plan			UEPSP	UEPA6	1.79	9.93	9.19	3.66	2.92			20.35	10.54	13.32	1.40
		Unbundled Exchange Ports, PBX Trunk Combination, first trunk, Collierville and Memphis Local Calling Plan			UEPSP	UEPA7	1.79	9.93	9.19	3.66	2.92			20.35	10.54	13.32	1.40
		2-Wire Voice Unbundled 1-Way Outgoing PBX Measured Port			UEPSP	UEPXS	1.79	9.93	9.19	3.66	2.92			20.35	10.54	13.32	1.40
		2-Wire Voice Unbundled PBX Collierville and Memphis Calling Port			UEPSP	UEPXU	1.79	9.93	9.19	3.66	2.92			20.35	10.54	13.32	1.40

UNBUNDLED NETWORK ELEMENTS - Tennessee														Attachment: 2		Exhibit: A	
CATEGORY	RATE ELEMENTS	Interim	Zone	BCS	USOC	RATES ($)					Svc Order Submitted Elec per LSR	Svc Order Submitted Manually per LSR	Incremental Charge - Manual Svc Order vs. Electronic-1st	Incremental Charge - Manual Svc Order vs. Electronic-Add'l	Incremental Charge - Manual Svc Order vs. Electronic-Disc 1st	Incremental Charge - Manual Svc Order vs. Electronic-Disc Add'l
						Rec	Nonrecurring		Nonrecurring Disconnect		OSS Rates ($)					
							First	Add'l	First	Add'l	SOMEC	SOMAN	SOMAN	SOMAN	SOMAN	SOMAN
	2-Wire Voice Unbundled 2-Way PBX Tennessee RegionServ Calling Port			UEPSP	UEPXV	1.79	9.93	9.19	3.66	2.92			20.35	10.54	13.32	1.40
	Subsequent Activity			UEPSP	USASC	0.00	0.00	0.00					20.35	10.54	13.32	1.40
FEATURES																
	All Available Vertical Features			UEPSP UEPSE	UEPVF	0.00	0.00	0.00					20.35	10.54	13.32	1.40
EXCHANGE PORT RATES (COIN)																
	Exchange Ports - Coin Port					2.11	9.93	9.19	3.66	2.92			20.35	10.54	13.32	1.40
NOTE: Transmission/usage charges associated with POTS circuit switched usage will also apply to circuit switched voice and/or circuit switched data transmission by B-Channels associated with 2-wire ISDN ports.																
NOTE: Access to B Channel or D Channel Packet capabilities will be available only through BFR/New Business Request Process. Rates for the packet capabilities will be determined via the Bona Fide Request/New Business Request Process.																
UNBUNDLED LOCAL EXCHANGE SWITCHING(PORTS)																
EXCHANGE PORT RATES																
The DS1 Port rates below for 4-Wire DDITS Trunk Port and 4-Wire ISDN Port in this rate exhibit apply to the embedded base in place as of 10/2/03 until 4/1/04. After 4/1/04 these rates shall revert to tariff rates or a separate agreement.																
Requests for 4-Wire DDITS Trunk Ports with 4-Wire ISDN DS1 Ports after the effective date of this amendment shall be provided pursuant to a separate agreement or tariff at BellSouth's discretion.																
	Exchange Ports - 2-Wire DID Port			UEPEX	UEPP2	8.97	47.75	47.01	9.21	8.47			20.35	10.54	13.32	1.40
	Exchange Ports - DDITS Port - 4-Wire DS1 Port with DID capability (E:4/1/2004)			UEPDD	UEPDD	35.74	75.93	38.15	8.77	8.04			20.35	10.54	13.32	1.40
	Exchange Ports - 2-Wire ISDN Port (See Notes below.)			UEPTX, UEPSX	U1PMA	16.26	30.23	29.49	4.10	4.10			20.35	10.54	13.32	1.40
	All Features Offered			UEPTX, UEPSX	UEPVF	0.00	0.00	0.00								
	Exchange Ports - 2-Wire ISDN Port -- Channel Profiles			UEPTX, UEPSX	U1UMA	0.00	0.00	0.00								
NOTE: Transmission/usage charges associated with POTS circuit switched usage will also apply to circuit switched voice and/or circuit switched data transmission by B-Channels associated with 2-wire ISDN ports.																
NOTE: Access to B Channel or D Channel Packet capabilities will be available only through BFR/New Business Request Process. Rates for the packet capabilities will be determined via the Bona Fide Request/New Business Request Process.																
EXCHANGE PORT RATES (continued)																
	Exchange Ports - 4-Wire ISDN DS1 Port with Detailed E911 Locator Capability (E:4/1/2004)			UEPEX	UEPEX	75.04	148.66	147.18	38.46	36.98			20.35	10.54	13.32	1.40
	Exchange Ports - 4-Wire ISDN DS1 Port (E:4/1/2004)			UEPDX	UEPDX	75.04	148.66	147.18	38.46	36.98			20.35	10.54		
	Physical Collocation - DS1 Cross-Connects			UEPEX UEPDX	PE1P1	1.51	53.27	40.16								
	Virtual collocation - Special Access & UNE, cross-connect per DS1			UEPEX UEPDX	CNC1X	1.32	32.22	17.76	10.46	8.75						
Detailed E911 with Locator Capability (required with UEPEX port)																
	Unbundled Exchange Ports, 4-Wire ISDN DS1 Port - E911 Locator Capability - Initial Profile Establishment per CLEC per State			UEPEX	UEP1A	0.00	1,699.00		147.00				20.35	10.54		
	Unbundled Exchange Ports, 4-Wire ISDN DS1 Port - E911 Locator Capability - Subsequent Profile Changes, Additions, Deletions			UEPEX	UEP1B	0.00	164.94						20.35	10.54		
New or Additional PRI Telephone Numbers																
	Unbundled Exchange Ports, 4-Wire ISDN DS1 Port - E911 Locator Capability 2-way Telephone Numbers, per number in E911 profile [New or Additional]			UEPEX	UEP1C	0.0755	0.94						20.35	10.54		
	Unbundled Exchange Ports, 4-Wire ISDN DS1 Port - E911 Locator Capability - Outdial Telephone Numbers, per number in E911 profile [New or Additional]			UEPEX	UEP1D	0.0755	22.36	22.36					20.35	10.54		
	Unbundled Exchange Ports, 4-Wire ISDN DS1 Port - Inward Telephone Numbers - Inward Data Only Option [New or Additional]			UEPDX	UEP1E	0.00	0.94						20.35	10.54		
	Exchange Ports - 4-Wire ISDN DS1 Port - Subsequent [New] Inward Tel Numbers [Customer Testing Purposes]			UEPEX	PR7ZT	0.00	44.71	44.70					20.35	10.54		
LOCAL NUMBER PORTABILITY																
	Local Number Portability (1 per port)			UEPEX UEPDX	LNPCN	1.75							20.35	10.54		
INTERFACE (Provsioning Only)																
	Voice/Data			UEPEX	PR71V	0.00	0.00	0.00					20.35	10.54		
	Digital Data			UEPEX	PR71D	0.00	0.00	0.00					20.35	10.54		
	Inward Data			UEPDX	PR71E	0.00	0.00	0.00					20.35	10.54		
New or Additional Channel																
	New or Additional - Voice/Data "B" Channel			UEPEX	PR7BV	0.00	28.39						20.35	10.54		
	New or Additional - Digital Data "B" Channel			UEPEX	PR7BF	0.00	29.11						20.35	10.54		
	New or Additional Inward Data "B" Channel			UEPDX	PR7BD	0.00	29.39						20.35	10.54		
	New or Additional Useage Sensitive Voice Data "B" Channel			UEPEX	PR7BS	0.00	29.39						20.35	10.54		
	New or Additional Useage Sensitive Digital Data "B" Channel			UEPEX	PR7BU	0.00	29.39						20.35	10.54		

UNBUNDLED NETWORK ELEMENTS - Tennessee														Attachment: 2		Exhibit: A	
CATEGORY	RATE ELEMENTS	Interim	Zone	BCS	USOC	RATES ($)					Svc Order Submitted Elec per LSR	Svc Order Submitted Manually per LSR	Incremental Charge - Manual Svc Order vs. Electronic-1st	Incremental Charge - Manual Svc Order vs. Electronic-Add'l	Incremental Charge - Manual Svc Order vs. Electronic-Disc 1st	Incremental Charge - Manual Svc Order vs. Electronic-Disc Add'l
						Rec	Nonrecurring First	Nonrecurring Add'l	Nonrecurring Disconnect First	Nonrecurring Disconnect Add'l	OSS Rates ($) SOMEC	SOMAN	SOMAN	SOMAN	SOMAN	SOMAN
	New or Additional PRI "D" Channel			UEPEX	PR7EX	0.00	29.39						20.35	10.54		
CALL TYPES																
	Inward			UEPEX UEPDX	PR7C1	0.00	0.00	0.00								
	Outward			UEPEX	PR7CO	0.00	0.00	0.00								
	Two-way			UEPEX	PR7CC	0.00	0.00	0.00								
UNBUNDLED PORT with REMOTE CALL FORWARDING CAPABILITY																
UNBUNDLED REMOTE CALL FORWARDING SERVICE - RESIDENCE																
	Unbundled Remote Call Forwarding Service, Area Calling, Res			UEPVR	UERAC	1.89	9.93	9.19	3.66	2.92			20.35	10.54	13.32	1.40
	Unbundled Remote Call Forwarding Service, Local Calling - Res			UEPVR	UERLC	1.89	9.93	9.19	3.66	2.92			20.35	10.54	13.32	1.40
	Unbundled Remote Call Forwarding Service, InterLATA - Res			UEPVR	UERTE	1.89	9.93	9.19	3.66	2.92			20.35	10.54	13.32	1.40
	Unbundled Remote Call Forwarding Service, IntraLATA - Res			UEPVR	UERTR	1.89	9.93	9.19	3.66	2.92			20.35	10.54	13.32	1.40
Non-Recurring																
	Unbundled Remote Call Forwarding Service - Conversion - Switch-as-is			UEPVR	USAC2		1.03	0.29					20.35	10.54	13.32	1.40
	Unbundled Remote Call Forwarding Service - Conversion with allowed change (PIC and LPIC)			UEPVR	USACC		1.03	0.29								
UNBUNDLED REMOTE CALL FORWARDING - Bus																
	Unbundled Remote Call Forwarding Service, Area Calling - Bus			UEPVB	UERAC	1.89	9.93	9.19	3.66	2.92			20.35	10.54	13.32	1.40
	Unbundled Remote Call Forwarding Service, Local Calling - Bus			UEPVB	UERLC	1.89	9.93	9.19	3.66	2.92			20.35	10.54	13.32	1.40
	Unbundled Remote Call Forwarding Service, InterLATA - Bus			UEPVB	UERTE	1.89	9.93	9.19	3.66	2.92			20.35	10.54	13.32	1.40
	Unbundled Remote Call Forwarding Service, IntraLATA - Bus			UEPVB	UERTR	1.89	9.93	9.19	3.66	2.92			20.35	10.54	13.32	1.40
	Unbundled Remote Call Forwarding Service Expanded and Exception Local Calling			UEPVB	UERVJ	1.89	9.93	9.19	3.66	2.92			20.35	10.54	13.32	1.40
Non-Recurring																
	Unbundled Remote Call Forwarding Service - Conversion - Switch-as-is			UEPVB	USAC2		1.03	0.29					20.35	10.54	13.32	1.40
	Unbundled Remote Call Forwarding Service - Conversion with allowed change (PIC and LPIC)			UEPVB	USACC		1.03	0.29								
UNBUNDLED LOCAL SWITCHING, PORT USAGE																
End Office Switching (Port Usage)																
	End Office Switching Function, Per MOU					0.0008041										
Tandem Switching (Port Usage) (Local or Access Tandem)																
	Tandem Switching Function Per MOU					0.0009778										
	Tandem Switching Function Per MOU (Melded)					0.000380364										
	Melded Factor: 38.90% of the Tandem Rate															
Common Transport																
	Common Transport - Per Mile, Per MOU					0.0000064										
	Common Transport - Facilities Termination Per MOU					0.0003871										
UNBUNDLED PORT/LOOP COMBINATIONS - COST BASED RATES																
Cost Based Rates are applied where BellSouth is required by FCC and/or State Commission rule to provide Unbundled Local Switching or Switch Ports.																
Features shall apply to the Unbundled Port/Loop Combination - Cost Based Rate section in the same manner as they are applied to the Stand-Alone Unbundled Port section of this Rate Exhibit.																
End Office and Tandem Switching Usage and Common Transport Usage rates in the Port section of this rate exhibit shall apply to all combinations of loop/port network elements except for UNE Coin Port/Loop Combinations.																
The first and additional Port nonrecurring charges apply to Not Currently Combined Combos. For Currently Combined Combos the nonrecurring charges shall be those identified in the Nonrecurring - Currently Combined sections.																
2-WIRE VOICE GRADE LOOP WITH 2-WIRE LINE PORT (RES)																
UNE Port/Loop Combination Rates																
	2-Wire VG Loop/Port Combo - Zone 1		1			14.18										
	2-Wire VG Loop/Port Combo - Zone 2		2			18.01										
	2-Wire VG Loop/Port Combo - Zone 3		3			23.02										
UNE Loop Rates																
	2-Wire Voice Grade Loop (SL1) - Zone 1		1	UEPRX	UEPLX	12.48										
	2-Wire Voice Grade Loop (SL1) - Zone 2		2	UEPRX	UEPLX	16.31										
	2-Wire Voice Grade Loop (SL1) - Zone 3		3	UEPRX	UEPLX	21.32										
2-Wire Voice Grade Line Port Rates (Res)																
	2-Wire voice unbundled port - residence			UEPRX	UEPRL	1.70	22.14	15.25	8.45	3.91		15.69				
	2-Wire voice unbundled port with Caller ID - res			UEPRX	UEPRC	1.70	22.14	15.25	8.45	3.91		15.69				
	2-Wire voice unbundled port outgoing only - res			UEPRX	UEPRO	1.70	22.14	15.25	8.45	3.91		15.69				

UNBUNDLED NETWORK ELEMENTS - Tennessee														Attachment: 2		Exhibit: A	
CATEGORY		RATE ELEMENTS	Interim	Zone	BCS	USOC	RATES ($)					Svc Order Submitted Elec per LSR	Svc Order Submitted Manually per LSR	Incremental Charge - Manual Svc Order vs. Electronic-1st	Incremental Charge - Manual Svc Order vs. Electronic-Add'l	Incremental Charge - Manual Svc Order vs. Electronic-Disc 1st	Incremental Charge - Manual Svc Order vs. Electronic-Disc Add'l
							Rec	Nonrecurring		Nonrecurring Disconnect		OSS Rates ($)					
								First	Add'l	First	Add'l	SOMEC	SOMAN	SOMAN	SOMAN	SOMAN	SOMAN
		2-Wire voice Grade unbundled Tennessee extended local dialing parity port with Caller ID - res			UEPRX	UEPAQ	1.70	22.14	15.25	8.45	3.91		15.69				
		2-Wire voice unbundled Tennessee Area Plus with Caller ID - res (AC7)			UEPRX	UEPAH	1.70	22.14	15.25	8.45	3.91		15.69				
		2-Wire voice unbundled Tennessee Area Calling port with Caller ID - res (F2R)			UEPRX	UEPAK	1.70	22.14	15.25	8.45	3.91		15.69				
		2-Wire voice unbundled Tennessee Area Calling port with Caller ID - res (TACER)			UEPRX	UEPAL	1.70	22.14	15.25	8.45	3.91		15.69				
		2-Wire voice unbundled Tennessee Area Calling port with Caller ID - res (TACSR)			UEPRX	UEPAM	1.70	22.14	15.25	8.45	3.91		15.69				
		2-Wire voice unbundled Tennessee Area Calling port with Caller ID - res (1MF2X)			UEPRX	UEPAN	1.70	22.14	15.25	8.45	3.91		15.69				
		2-Wire voice unbundled Tennessee Area Calling port with Caller ID - res (2MR)			UEPRX	UEPAO	1.70	22.14	15.25	8.45	3.91		15.69				
		2-Wire voice unbundles res, low usage line port with Caller ID (LUM)			UEPRX	UEPAP	1.70	22.14	15.25	8.45	3.91		15.69				
		2-Wire Voice Unbundled Tennessee Residence Dialing Plan without Caller ID			UEPRX	UEPWN	1.70	22.14	15.25	8.45	3.91		15.69				
		2-Wire voice unbundled Tennessee Area Plus Port without Caller ID Capability			UEPRX	UEPRR	1.70	22.14	15.25	8.45	3.91		15.69				
		2-Wire voice unbundled Low Usage Line Port without Caller ID Capability			UEPRX	UEPRT	1.70	22.14	15.25	8.45	3.91		15.69				
	FEATURES																
		All Features Offered			UEPRX	UEPVF	0.00	0.00	0.00				15.69				
	LOCAL NUMBER PORTABILITY																
		Local Number Portability (1 per port)			UEPRX	LNPCX	0.35										
	NONRECURRING CHARGES (NRCs) - CURRENTLY COMBINED																
		2-Wire Voice Grade Loop / Line Port Combination - Conversion - Switch-as-is			UEPRX	USAC2		1.03	0.29				15.69				
		2-Wire Voice Grade Loop / Line Port Combination - Conversion - Switch with change			UEPRX	USACC		1.03	0.29				15.69				
		2-Wire Voice Grade Loop / Line Port Combination - Conversion - Subsequent Database Update						0.76					15.69				
	ADDITIONAL NRCs																
		2-Wire Voice Grade Loop/Line Port Combination - Subsequent Activity			UEPRX	USAS2	0.00	0.00	0.00				15.69				
		Unbundled Miscellaneous Rate Element, Tag Loop at End User Premise			UEPRX	URETL		8.33	0.83					20.35	10.54	13.32	13.32
	OFF/ON PREMISES EXTENSION CHANNELS																
		2 Wire Analog Voice Grade Extension Loop – Non-Design		1	UEPRX	UEAEN	13.19	31.99	20.02	10.65	1.41			20.35	10.54	13.32	13.32
		2 Wire Analog Voice Grade Extension Loop – Non-Design		2	UEPRX	UEAEN	17.23	31.99	20.02	10.65	1.41			20.35	10.54	13.32	13.32
		2 Wire Analog Voice Grade Extension Loop – Non-Design		3	UEPRX	UEAEN	22.53	31.99	20.02	10.65	1.41			20.35	10.54	13.32	13.32
		2 Wire Analog Voice Grade Extension Loop – Design		1	UEPRX	UEAED	16.56	75.06	48.20	28.70	17.64			20.35	10.54	13.32	13.32
		2 Wire Analog Voice Grade Extension Loop – Design		2	UEPRX	UEAED	21.63	75.06	48.20	28.70	17.64			20.35	10.54	13.32	13.32
		2 Wire Analog Voice Grade Extension Loop – Design		3	UEPRX	UEAED	28.28	75.06	48.20	28.70	17.64			20.35	10.54	13.32	13.32
	INTEROFFICE TRANSPORT																
		Interoffice Transport - Dedicated - 2 Wire Voice Grade - Facility Termination			UEPRX	U1TV2	18.58	55.39	17.37	27.96	3.51						
		Interoffice Transport - Dedicated - 2 Wire Voice Grade - Per Mile or Fraction Mile			UEPRX	U1TVM	0.0174	0.00	0.00								
	2-WIRE VOICE GRADE LOOP WITH 2-WIRE LINE PORT (BUS)																
	UNE Port/Loop Combination Rates																
		2-Wire VG Loop/Port Combo - Zone 1		1			14.18										
		2-Wire VG Loop/Port Combo - Zone 2		2			18.01										
		2-Wire VG Loop/Port Combo - Zone 3		3			23.02										
	UNE Loop Rates																
		2-Wire Voice Grade Loop (SL1) - Zone 1		1	UEPBX	UEPLX	12.48										
		2-Wire Voice Grade Loop (SL1) - Zone 2		2	UEPBX	UEPLX	16.31										
		2-Wire Voice Grade Loop (SL1) - Zone 3		3	UEPBX	UEPLX	21.32										

UNBUNDLED NETWORK ELEMENTS - Tennessee													Attachment: 2		Exhibit: A	
CATEGORY	RATE ELEMENTS	Interim	Zone	BCS	USOC	RATES ($)					Svc Order Submitted Elec per LSR	Svc Order Submitted Manually per LSR	Incremental Charge - Manual Svc Order vs. Electronic-1st	Incremental Charge - Manual Svc Order vs. Electronic-Add'l	Incremental Charge - Manual Svc Order vs. Electronic-Disc 1st	Incremental Charge - Manual Svc Order vs. Electronic-Disc Add'l
						Rec	Nonrecurring		Nonrecurring Disconnect		OSS Rates ($)					
							First	Add'l	First	Add'l	SOMEC	SOMAN	SOMAN	SOMAN	SOMAN	SOMAN
2-Wire Voice Grade Line Port (Bus)																
	2-Wire voice unbundled port without Caller ID - bus			UEPBX	UEPBL	1.70	22.14	15.25	8.45	3.91		15.69				
	2-Wire voice unbundled port with Caller + E484 ID - bus			UEPBX	UEPBC	1.70	22.14	15.25	8.45	3.91		15.69				
	2-Wire voice unbundled port outgoing only - bus			UEPBX	UEPBO	1.70	22.14	15.25	8.45	3.91		15.69				
	2-Wire voice Grade unbundled Tennessee extended local dialing parity port with Caller ID - bus			UEPBX	UEPAV	1.70	22.14	15.25	8.45	3.91		15.69				
	2-Wire voice unbundled incoming only port with Caller ID - Bus			UEPBX	UEPB1	1.70	22.14	15.25	8.45	3.91		15.69				
	2-Wire voice unbundled Tennessee Bus 2-Way Area Calling Port Economy Option (TACC1)			UEPBX	UEPAC	1.70	22.14	15.25	8.45	3.91		15.69				
	2-Wire voice unbundled Tennessee Bus 2-Way Area Calling Port Standard Option (TACC2)			UEPBX	UEPAD	1.70	22.14	15.25	8.45	3.91		15.69				
	2-Wire voice unbundled Tennessee Bus 2-Way Collierville and Memphis Local Calling Port (B2F)			UEPBX	UEPAE	1.70	22.14	15.25	8.45	3.91		15.69				
	2-Wire Voice Unbundled Tennessee Business Dialing Plan without Caller ID			UEPBX	UEPWO	1.70	22.14	15.25	8.45	3.91		15.69				
	Tennessee Inward Collierville and Memphis Local Calling Plan (BUS)			UEPBX	UEPB2	1.70	22.14	15.25	8.45	3.91		15.69				
	Tennessee 2-Way Collierville and Memphis Local Calling Plan (BUS)			UEPBX	UEPB3	1.70	22.14	15.25	8.45	3.91		15.69				
	2-Wire voice unbundled Incoming Only Port without Caller ID Capability			UEPBX	UEPBE	1.70	22.14	15.25	8.45	3.91		15.69				
LOCAL NUMBER PORTABILITY																
	Local Number Portability (1 per port)			UEPBX	LNPCX	0.35										
FEATURES																
	All Features Offered			UEPBX	UEPVF	0.00	0.00	0.00				15.69				
NONRECURRING CHARGES (NRCs) - CURRENTLY COMBINED																
	2-Wire Voice Grade Loop / Line Port Combination - Conversion - Switch-as-is			UEPBX	USAC2		1.03	0.29				15.69				
	2-Wire Voice Grade Loop / Line Port Combination - Conversion - Switch with change			UEPBX	USACC		1.03	0.29				15.69				
	2-Wire Voice Grade Loop / Line Port Combination - Conversion - Subsequent Database Update						0.76					15.69				
ADDITIONAL NRCs																
	2-Wire Voice Grade Loop/Line Port Combination - Subsequent Activity			UEPBX	USAS2	0.00	0.00	0.00				15.69				
	Unbundled Miscellaneous Rate Element, Tag Loop at End User Premise			UEPBX	URETL		8.33	0.83					20.35	10.54	13.32	13.32
OFF/ON PREMISES EXTENSION CHANNELS																
	2 Wire Analog Voice Grade Extension Loop – Non-Design		1	UEPBX	UEAEN	13.19	31.99	20.02	10.65	1.41			20.35	10.54	13.32	13.32
	2 Wire Analog Voice Grade Extension Loop – Non-Design		2	UEPBX	UEAEN	17.23	31.99	20.02	10.65	1.41			20.35	10.54	13.32	13.32
	2 Wire Analog Voice Grade Extension Loop – Non-Design		3	UEPBX	UEAEN	22.53	31.99	20.02	10.65	1.41			20.35	10.54	13.32	13.32
	2 Wire Analog Voice Grade Extension Loop – Design		1	UEPBX	UEAED	16.56	75.06	48.20	28.70	17.64			20.35	10.54	13.32	13.32
	2 Wire Analog Voice Grade Extension Loop – Design		2	UEPBX	UEAED	21.63	75.06	48.20	28.70	17.64			20.35	10.54	13.32	13.32
	2 Wire Analog Voice Grade Extension Loop – Design		3	UEPBX	UEAED	28.28	75.06	48.20	28.70	17.64			20.35	10.54	13.32	13.32
INTEROFFICE TRANSPORT																
	Interoffice Transport - Dedicated - 2 Wire Voice Grade - Facility Termination			UEPBX	U1TV2	18.58	55.39	17.37	27.96	3.51						
	Interoffice Transport - Dedicated - 2 Wire Voice Grade - Per Mile or Fraction Mile			UEPBX	U1TVM	0.0174	0.00	0.00								
2-WIRE VOICE GRADE LOOP WITH 2-WIRE LINE PORT (RES - PBX)																
UNE Port/Loop Combination Rates																
	2-Wire VG Loop/Port Combo - Zone 1		1			14.18										
	2-Wire VG Loop/Port Combo - Zone 2		2			18.01										
	2-Wire VG Loop/Port Combo - Zone 3		3			23.02										
	2-Wire Voice Grade Loop (SL 1) - Zone 1		1	UEPRG	UEPLX	12.48										
	2-Wire Voice Grade Loop (SL 1) - Zone 2		2	UEPRG	UEPLX	16.31										
	2-Wire Voice Grade Loop (SL 1) - Zone 3		3	UEPRG	UEPLX	21.32										
2-Wire Voice Grade Line Port Rates (RES - PBX)																

UNBUNDLED NETWORK ELEMENTS - Tennessee														Attachment: 2		Exhibit: A	
CATEGORY	RATE ELEMENTS	Interim	Zone	BCS	USOC	RATES ($)					Svc Order Submitted Elec per LSR	Svc Order Submitted Manually per LSR	Incremental Charge - Manual Svc Order vs. Electronic-1st	Incremental Charge - Manual Svc Order vs. Electronic-Add'l	Incremental Charge - Manual Svc Order vs. Electronic-Disc 1st	Incremental Charge - Manual Svc Order vs. Electronic-Disc Add'l
						Rec	Nonrecurring		Nonrecurring Disconnect				OSS Rates ($)			
							First	Add'l	First	Add'l	SOMEC	SOMAN	SOMAN	SOMAN	SOMAN	SOMAN
	2-Wire VG Unbundled Combination 2-Way PBX Trunk Port - Res			UEPRG	UEPRD	1.70	22.14	15.25	8.45	3.91		15.69				
LOCAL NUMBER PORTABILITY																
	Local Number Portability (1 per port)			UEPRG	LNPCP	3.15	0.00	0.00				15.69				
FEATURES																
	All Features Offered			UEPRG	UEPVF	0.00	0.00	0.00				15.69				
NONRECURRING CHARGES (NRCs) - CURRENTLY COMBINED																
	2-Wire Voice Grade Loop/ Line Port Combination (PBX) - Conversion - Switch-As-Is			UEPRG	USAC2		1.03	0.29				15.69				
	2-Wire Voice Grade Loop/ Line Port Combination (PBX) - Conversion - Switch with Change			UEPRG	USACC		1.03	0.29				15.69				
	2-Wire Voice Grade Loop / Line Port Combination - Conversion - Subsequent Database Update						0.76					15.69				
ADDITIONAL NRCs																
	2-Wire Voice Grade Loop/ Line Port Combination (PBX) - Subsequent Activity			UEPRG	USAS2	0.00	0.00	0.00				15.69				
	PBX Subsequent Activity - Change/Rearrange Multiline Hunt Group						14.64	14.64				15.69				
	Unbundled Miscellaneous Rate Element, Tag Loop at End User Premise			UEPRG	URETL		8.33	0.83					20.35	10.54	13.32	13.32
OFF/ON PREMISES EXTENSION CHANNELS																
	Local Channel Voice grade, per termination		1	UEPRG	P2JHX	16.56	75.06	48.20	28.70	17.64			20.35	10.54	13.32	13.32
	Local Channel Voice grade, per termination		2	UEPRG	P2JHX	21.63	75.06	48.20	28.70	17.64			20.35	10.54	13.32	13.32
	Local Channel Voice grade, per termination		3	UEPRG	P2JHX	28.28	75.06	48.20	28.70	17.64			20.35	10.54	13.32	13.32
	Non-Wire Direct Serve Channel Voice Grade		SW	UEPRG	SDD2X	10.02	148.84	112.34	73.14	36.65			20.35	10.54	13.32	13.32
INTEROFFICE TRANSPORT																
	Interoffice Transport - Dedicated - 2 Wire Voice Grade - Facility Termination			UEPRG	U1TV2	18.58	55.39	17.37	27.96	3.51						
	Interoffice Transport - Dedicated - 2 Wire Voice Grade - Per Mile or Fraction Mile			UEPRG	U1TVM	0.0174	0.00	0.00								
2-WIRE VOICE GRADE LOOP WITH 2-WIRE LINE PORT (BUS - PBX)																
UNE Port/Loop Combination Rates																
	2-Wire VG Loop/Port Combo - Zone 1		1			14.18										
	2-Wire VG Loop/Port Combo - Zone 2		2			18.01										
	2-Wire VG Loop/Port Combo - Zone 3		3			23.02										
UNE Loop Rates																
	2-Wire Voice Grade Loop (SL 1) - Zone 1		1	UEPPX	UEPLX	12.48										
	2-Wire Voice Grade Loop (SL 1) - Zone 2		2	UEPPX	UEPLX	16.31										
	2-Wire Voice Grade Loop (SL 1) - Zone 3		3	UEPPX	UEPLX	21.32										
2-Wire Voice Grade Line Port Rates (BUS - PBX)																
	Line Side Unbundled Combination 2-Way PBX Trunk Port - Bus			UEPPX	UEPPC	1.70	22.14	15.25	8.45	3.91		15.69				
	Line Side Unbundled Outward PBX Trunk Port - Bus			UEPPX	UEPPO	1.70	22.14	15.25	8.45	3.91		15.69				
	Line Side Unbundled Incoming PBX Trunk Port - Bus			UEPPX	UEPP1	1.70	22.14	15.25	8.45	3.91		15.69				
	2-Wire Voice Unbundled PBX LD Terminal Ports			UEPPX	UEPLD	1.70	22.14	15.25	8.45	3.91		15.69				
	2-Wire Voice Unbundled 2-Way Combination PBX Tennessee Calling Port			UEPPX	UEPT2	1.70	22.14	15.25	8.45	3.91		15.69				
	2-Wire Voice Unbundled 1-Way Outgoing PBX Tennessee Calling Port			UEPPX	UEPTO	1.70	22.14	15.25	8.45	3.91		15.69				
	2-Wire Voice Unbundled 2-Way Combination PBX Usage Port			UEPPX	UEPXA	1.70	22.14	15.25	8.45	3.91		15.69				
	2-Wire Voice Unbundled PBX Toll Terminal Hotel Ports			UEPPX	UEPXB	1.70	22.14	15.25	8.45	3.91		15.69				
	2-Wire Voice Unbundled PBX LD DDD Terminals Port			UEPPX	UEPXC	1.70	22.14	15.25	8.45	3.91		15.69				
	2-Wire Voice Unbundled PBX LD Terminal Switchboard Port			UEPPX	UEPXD	1.70	22.14	15.25	8.45	3.91		15.69				
	2-Wire Voice Unbundled PBX LD Terminal Switchboard IDD Capable Port			UEPPX	UEPXE	1.70	22.14	15.25	8.45	3.91		15.69				
	2-Wire Voice Unbundled 2-Way PBX Hotel/Hospital Economy Administrative Calling Port			UEPPX	UEPXL	1.70	22.14	15.25	8.45	3.91		15.69				
	2-Wire Voice Unbundled 2-Way PBX Hotel/Hospital Economy Room Calling Port			UEPPX	UEPXM	1.70	22.14	15.25	8.45	3.91		15.69				

UNBUNDLED NETWORK ELEMENTS - Tennessee														Attachment: 2		Exhibit: A	
CATEGORY	RATE ELEMENTS	Interim	Zone	BCS	USOC	RATES ($)					Svc Order Submitted Elec per LSR	Svc Order Submitted Manually per LSR	Incremental Charge - Manual Svc Order vs. Electronic-1st	Incremental Charge - Manual Svc Order vs. Electronic-Add'l	Incremental Charge - Manual Svc Order vs. Electronic-Disc 1st	Incremental Charge - Manual Svc Order vs. Electronic-Disc Add'l
						Rec	Nonrecurring		Nonrecurring Disconnect				OSS Rates ($)			
							First	Add'l	First	Add'l	SOMEC	SOMAN	SOMAN	SOMAN	SOMAN	SOMAN
	2-Wire Voice Unbundled 1W Out PBX Hotel/Hospital Economy Administrative Calling Port TN Calling Port			UEPPX	UEPXN	1.70	22.14	15.25	8.45	3.91		15.69				
	2-Wire Voice Unbundled 1-Way Outgoing PBX Hotel/Hospital Discount Room Calling Port			UEPPX	UEPXO	1.70	22.14	15.25	8.45	3.91		15.69				
	2-Wire Voice Unbundled 1-Way Outgoing PBX Measured Port			UEPPX	UEPXS	1.70	22.14	15.25	8.45	3.91		15.69				
	2-Wire Voice Unbundled PBX Collierville and Memphis Calling Port			UEPPX	UEPXU	1.70	22.14	15.25	8.45	3.91		15.69				
	2-Wire Voice Unbundled 2-Way PBX Tennessee RegionServ Callling Port			UEPPX	UEPXV	1.70	22.14	15.25	8.45	3.91		15.69				
	Tennessee PBX 2-Way Combo Each Additional Trunk Collierville and Memphis Local Calling Plan			UEPPX	UEPA6	1.70	22.14	15.25	8.45	3.91		15.69				
	Tennessee PBX 2-Way Combo First Trunk Collierville and Memphis Local Calling Plan			UEPPX	UEPA7	1.70	22.14	15.25	8.45	3.91		15.69				
LOCAL NUMBER PORTABILITY																
	Local Number Portability (1 per port)			UEPPX	LNPCP	3.15	0.00	0.00				15.69				
FEATURES																
	All Features Offered			UEPPX	UEPVF	0.00	0.00	0.00				15.69				
NONRECURRING CHARGES (NRCs) - CURRENTLY COMBINED																
	2-Wire Voice Grade Loop/ Line Port Combination (PBX) - Conversion - Switch-As-Is			UEPPX	USAC2		1.03	0.29				15.69				
	2-Wire Voice Grade Loop/ Line Port Combination (PBX) - Conversion - Switch with Change			UEPPX	USACC		1.03	0.29				15.69				
	2-Wire Voice Grade Loop / Line Port Combination - Conversion - Subsequent Database Update						0.76					15.69				
ADDITIONAL NRCs																
	2-Wire Voice Grade Loop/ Line Port Combination (PBX) - Subsequent Activity			UEPPX	USAS2	0.00	0.00	0.00				15.69				
	PBX Subsequent Activity - Change/Rearrange Multiline Hunt Group						14.64	14.64				15.69				
	Unbundled Miscellaneous Rate Element, Tag Loop at End User Premise			UEPPX	URETL		8.33	0.83					20.35	10.54	13.32	13.32
OFF/ON PREMISES EXTENSION CHANNELS																
	Local Channel Voice grade, per termination		1	UEPPX	P2JHX	16.56	75.06	48.20	28.70	17.64			20.35	10.54	13.32	13.32
	Local Channel Voice grade, per termination		2	UEPPX	P2JHX	21.63	75.06	48.20	28.70	17.64			20.35	10.54	13.32	13.32
	Local Channel Voice grade, per termination		3	UEPPX	P2JHX	28.28	75.06	48.20	28.70	17.64			20.35	10.54	13.32	13.32
	Non-Wire Direct Serve Channel Voice Grade		SW	UEPPX	SDD2X	10.02	148.84	112.34	73.14	36.65			20.35	10.54	13.32	13.32
INTEROFFICE TRANSPORT																
	Interoffice Transport - Dedicated - 2 Wire Voice Grade - Facility Termination			UEPPX	U1TV2	18.58	55.39	17.37	27.96	3.51						
	Interoffice Transport - Dedicated - 2 Wire Voice Grade - Per Mile or Fraction Mile			UEPPX	U1TVM	0.0174	0.00	0.00								
UNE Port/Loop Combination Rates																
	2-Wire VG Coin Port/Loop Combo – Zone 1		1			14.18										
	2-Wire VG Coin Port/Loop Combo – Zone 2		2			18.01										
	2-Wire VG Coin Port/Loop Combo – Zone 3		3			23.02										
UNE Loop Rates																
	2-Wire Voice Grade Loop (SL1) - Zone 1		1	UEPCO	UEPLX	12.48										
	2-Wire Voice Grade Loop (SL1) - Zone 2		2	UEPCO	UEPLX	16.31										
	2-Wire Voice Grade Loop (SL1) - Zone 3		3	UEPCO	UEPLX	21.32										
2-Wire Voice Grade Line Ports (COIN)																
	2-Wire Coin 2-Way without Operator Screening and without Blocking (TN)			UEPCO	UEPTB	1.70	22.14	15.25	8.45	3.91		15.69				
	2-Wire Coin 2-Way with Operator Screening and Blocking: 011, 900/976, 1+DDD (NC, TN)			UEPCO	UEPRP	1.70	22.14	15.25	8.45	3.91		15.69				
	2-Wire Coin 2-Way with Operator Screening and 011 Blocking (TN)			UEPCO	UEPTA	1.70	22.14	15.25	8.45	3.91		15.69				
	2-Wire Coin 2-Way with Operator Screening: 900 Blocking: 900/976, 1+DDD, 011+, and Local (NC, TN)			UEPCO	UEPCA	1.70	22.14	15.25	8.45	3.91		15.69				

UNBUNDLED NETWORK ELEMENTS - Tennessee													Attachment: 2		Exhibit: A	
CATEGORY	RATE ELEMENTS	Interim	Zone	BCS	USOC	RATES ($)					Svc Order Submitted Elec per LSR	Svc Order Submitted Manually per LSR	Incremental Charge - Manual Svc Order vs. Electronic-1st	Incremental Charge - Manual Svc Order vs. Electronic-Add'l	Incremental Charge - Manual Svc Order vs. Electronic-Disc 1st	Incremental Charge - Manual Svc Order vs. Electronic-Disc Add'l
						Rec	Nonrecurring		Nonrecurring Disconnect		OSS Rates ($)					
							First	Add'l	First	Add'l	SOMEC	SOMAN	SOMAN	SOMAN	SOMAN	SOMAN
	2-Wire Coin Outward with Operator Screening and 011 Blocking (TN)			UEPCO	UEPTC	1.70	22.14	15.25	8.45	3.91		15.69				
	2-Wire Coin Outward with Operator Screening and Blocking: 900/976, 1+DDD, 011+, and Local (TN)			UEPCO	UEPOT	1.70	22.14	15.25	8.45	3.91		15.69				
	2-Wire 2-Way Smartline with 900/976 (all states except LA)			UEPCO	UEPCK	1.88						15.69				
	2-Wire Coin Outward Smartline with 900/976 (all states except LA)			UEPCO	UEPCR	1.88						15.69				
ADDITIONAL UNE COIN PORT/LOOP (RC)																
	UNE Coin Port/Loop Combo Usage (Flat Rate)			UEPCO	URECU	3.45	0.00	0.00	0.00	0.00		15.69				
	Local Number Portability (1 per port)			UEPCO	LNPCX	0.35										
	2-Wire Voice Grade Loop / Line Port Combination - Conversion - Switch-as-is			UEPCO	USAC2		1.03	0.29				15.69				
	2-Wire Voice Grade Loop / Line Port Combination - Conversion - Switch with change			UEPCO	USACC		1.03	0.29				15.69				
	2-Wire Voice Grade Loop/Line Port Combination - Subsequent Activity			UEPCO	USAS2	0.00	0.00	0.00				15.69				
	Unbundled Miscellaneous Rate Element, Tag Loop at End User Premise			UEPCO	URETL		8.33	0.83					20.35	10.54	13.32	13.32
2-WIRE VOICE LOOP/ 2WIRE VOICE GRADE IO TRANSPORT/ 2-WIRE LINE PORT (RES)																
UNE Port/Loop Combination Rates																
	2-Wire VG Loop/IO Tranport/Port Combo - Zone 1		1			18.45										
	2-Wire VG Loop/IO Tranport/Port Combo - Zone 2		2			23.52										
	2-Wire VG Loop/IO Tranport/Port Combo - Zone 3		3			30.17										
UNE Loop Rates																
	2-Wire Voice Grade Loop (SL2) - Zone 1		1	UEPFR	UECF2	16.56										
	2-Wire Voice Grade Loop (SL2) - Zone 2		2	UEPFR	UECF2	21.63										
	2-Wire Voice Grade Loop (SL2) - Zone 3		3	UEPFR	UECF2	28.28										
2-Wire Voice Grade Line Port Rates (Res)																
	2-Wire voice unbundled port - residence			UEPFR	UEPRL	1.89	84.99	57.39	32.36	20.56		15.69				
	2-Wire voice unbundled port with Caller ID - res			UEPFR	UEPRC	1.89	84.99	57.39	32.36	20.56		15.69				
	2-Wire voice unbundled port outgoing only - res			UEPFR	UEPRO	1.89	84.99	57.39	32.36	20.56		15.69				
	2-Wire voice Grade unbundled Tennessee extended local dialing parity port with Caller ID - res			UEPFR	UEPAQ	1.89	84.99	57.39	32.36	20.56		15.69				
	2-Wire voice unbundled Tennessee Area Plus with Caller ID - res (AC7)			UEPFR	UEPAH	1.89	84.99	57.39	32.36	20.56		15.69				
	2-Wire voice unbundled Tennessee Area Calling port with Caller ID - res (F2R)			UEPFR	UEPAK	1.89	84.99	57.39	32.36	20.56		15.69				
	2-Wire voice unbundled Tennessee Area Calling port with Caller ID - res (TACER)			UEPFR	UEPAL	1.89	84.99	57.39	32.36	20.56		15.69				
	2-Wire voice unbundled Tennessee Area Calling port with Caller ID - res (TACSR)			UEPFR	UEPAM	1.89	84.99	57.39	32.36	20.56		15.69				
	2-Wire voice unbundled Tennessee Area Calling port with Caller ID - res (1MF2X)			UEPFR	UEPAN	1.89	84.99	57.39	32.36	20.56		15.69				
	2-Wire voice unbundled Tennessee Area Calling port with Caller ID - res (2MR)			UEPFR	UEPAO	1.89	84.99	57.39	32.36	20.56		15.69				
	2-Wire voice unbundles res, low usage line port with Caller ID (LUM)			UEPFR	UEPAP	1.89	84.99	57.39	32.36	20.56		15.69				
	2-Wire Voice Unbundled Tennessee Residence Dialing Plan without Caller ID			UEPFR	UEPWN	1.89	84.99	57.39	32.36	20.56		15.69				
INTEROFFICE TRANSPORT																
	Interoffice Transport - Dedicated - 2 Wire Voice Grade - Facility Termination			UEPFR	U1TV2	18.58	55.39	17.37	27.96	3.51						
	Interoffice Transport - Dedicated - 2 Wire Voice Grade - Per Mile or Fraction Mile			UEPFR	1L5XX	0.0174										
FEATURES																
	All Features Offered			UEPFR	UEPVF	0.00	0.00	0.00				15.69				
LOCAL NUMBER PORTABILITY																
	Local Number Portability (1 per port)			UEPFR	LNPCX	0.35										
NONRECURRING CHARGES (NRCs) - CURRENTLY COMBINED																

UNBUNDLED NETWORK ELEMENTS - Tennessee													Attachment: 2		Exhibit: A	
CATEGORY	RATE ELEMENTS	Interim	Zone	BCS	USOC	RATES ($)					Svc Order Submitted Elec per LSR	Svc Order Submitted Manually per LSR	Incremental Charge - Manual Svc Order vs. Electronic-1st	Incremental Charge - Manual Svc Order vs. Electronic-Add'l	Incremental Charge - Manual Svc Order vs. Electronic-Disc 1st	Incremental Charge - Manual Svc Order vs. Electronic-Disc Add'l
						Rec	Nonrecurring		Nonrecurring Disconnect		OSS Rates ($)					
							First	Add'l	First	Add'l	SOMEC	SOMAN	SOMAN	SOMAN	SOMAN	SOMAN
	2-Wire Loop / Dedicated IO Transport / 2 Wire Line Port Combination - Conversion - Switch-as-is			UEPFR	USAC2		16.94	3.72				15.69				
	2-Wire Loop / Dedicated IO Transport / 2 Wire Line Port Combination - Conversion - Switch-With-Change			UEPFR	USACC		16.94	3.72				15.69				
	Unbundled Miscellaneous Rate Element, Tag Designed Loop at End User Premise			UEPFR	URETN		11.23	1.10					20.35	10.54	13.32	13.32
2-WIRE VOICE LOOP/ 2WIRE VOICE GRADE IO TRANSPORT/ 2-WIRE LINE PORT (BUS)																
UNE Port/Loop Combination Rates																
	2-Wire VG Loop/IO Tranport/Port Combo - Zone 1		1			18.45										
	2-Wire VG Loop/IO Tranport/Port Combo - Zone 2		2			23.52										
	2-Wire VG Loop/IO Tranport/Port Combo - Zone 3		3			30.17										
UNE Loop Rates																
	2-Wire Voice Grade Loop (SL2) - Zone 1		1	UEPFB	UECF2	16.56										
	2-Wire Voice Grade Loop (SL2) - Zone 2		2	UEPFB	UECF2	21.63										
	2-Wire Voice Grade Loop (SL2) - Zone 3		3	UEPFB	UECF2	28.28										
2-Wire Voice Grade Line Port (Bus)																
	2-Wire voice unbundled port without Caller ID - bus			UEPFB	UEPBL	1.89	84.99	57.39	32.36	20.56		15.69				
	2-Wire voice unbundled port with Caller + E484 ID - bus			UEPFB	UEPBC	1.89	84.99	57.39	32.36	20.56		15.69				
	2-Wire voice unbundled port outgoing only - bus			UEPFB	UEPBO	1.89	84.99	57.39	32.36	20.56		15.69				
	2-Wire voice Grade unbundled Tennessee extended local dialing parity port with Caller ID - bus			UEPFB	UEPAV	1.89	84.99	57.39	32.36	20.56		15.69				
	2-Wire voice unbundled incoming only port with Caller ID - Bus			UEPFB	UEPB1	1.89	84.99	57.39	32.36	20.56		15.69				
	2-Wire voice unbundled Tennessee Bus 2-Way Area Calling Port Economy Option (TACC1)			UEPFB	UEPAC	1.89	84.99	57.39	32.36	20.56		15.69				
	2-Wire voice unbundled Tennessee Bus 2-Way Area Calling Port Standard Option (TACC2)			UEPFB	UEPAD	1.89	84.99	57.39	32.36	20.56		15.69				
	2-Wire voice unbundled Tennessee Bus 2-Way Collierville and Memphis Local Calling Port (B2F)			UEPFB	UEPAE	1.89	84.99	57.39	32.36	20.56		15.69				
	2-Wire Voice Unbundled Tennessee Business Dialing Plan without Caller ID			UEPFB	UEPWO	1.89	84.99	57.39	32.36	20.56		15.69				
	Tennessee Inward Collierville and Memphis Local Calling Plan (BUS)			UEPFB	UEPB2	1.89	84.99	57.39	32.36	20.56		15.69				
	Tennessee 2-Way Collierville and Memphis Local Calling Plan (BUS)			UEPFB	UEPB3	1.89	84.99	57.39	32.36	20.56		15.69				
LOCAL NUMBER PORTABILITY																
	Local Number Portability (1 per port)			UEPFB	LNPCX	0.35										
INTEROFFICE TRANSPORT																
	Interoffice Transport - Dedicated - 2 Wire Voice Grade - Facility Termination			UEPFB	U1TV2	18.58	55.39	17.37	27.96	3.51						
	Interoffice Transport - Dedicated - 2 Wire Voice Grade - Per Mile or Fraction Mile			UEPFB	1L5XX	0.0174										
FEATURES																
	All Features Offered			UEPFB	UEPVF	0.00	0.00	0.00				15.69				
NONRECURRING CHARGES (NRCs) - CURRENTLY COMBINED																
	2-Wire Loop / Dedicated IO Transport / 2 Wire Line Port Combination - Conversion - Switch-as-is			UEPFB	USAC2		16.94	3.72				15.69				
	2-Wire Loop / Dedicated IO Transport / 2 Wire Line Port Combination - Conversion - Switch with change			UEPFB	USACC		16.94	3.72				15.69				
	Unbundled Miscellaneous Rate Element, Tag Designed Loop at End User Premise			UEPFB	URETN		11.23	1.10					20.35	10.54	13.32	13.32
2-WIRE VOICE LOOP/ 2WIRE VOICE GRADE IO TRANSPORT/ 2-WIRE LINE PORT (PBX)																
UNE Port/Loop Combination Rates																
	2-Wire VG Loop/IO Tranport/Port Combo - Zone 1		1			18.45										
	2-Wire VG Loop/IO Tranport/Port Combo - Zone 2		2			23.52										
	2-Wire VG Loop/IO Tranport/Port Combo - Zone 3		3			30.17										
UNE Loop Rates																
	2-Wire Voice Grade Loop (SL2) - Zone 1		1	UEPFP	UECF2	16.56										
	2-Wire Voice Grade Loop (SL2) - Zone 2		2	UEPFP	UECF2	21.63										
	2-Wire Voice Grade Loop (SL2) - Zone 3		3	UEPFP	UECF2	28.28										

UNBUNDLED NETWORK ELEMENTS - Tennessee														Attachment: 2		Exhibit: A	
CATEGORY	RATE ELEMENTS	Interim	Zone	BCS	USOC	RATES ($)					Svc Order Submitted Elec per LSR	Svc Order Submitted Manually per LSR	Incremental Charge - Manual Svc Order vs. Electronic-1st	Incremental Charge - Manual Svc Order vs. Electronic-Add'l	Incremental Charge - Manual Svc Order vs. Electronic-Disc 1st	Incremental Charge - Manual Svc Order vs. Electronic-Disc Add'l
						Rec	Nonrecurring		Nonrecurring Disconnect		OSS Rates ($)					
							First	Add'l	First	Add'l	SOMEC	SOMAN	SOMAN	SOMAN	SOMAN	SOMAN
2-Wire Voice Grade Line Port Rates (BUS - PBX)																
	Line Side Unbundled Combination 2-Way PBX Trunk Port - Bus			UEPFP	UEPPC	1.79	106.40	63.08	42.67	18.54		15.69				
	Line Side Unbundled Outward PBX Trunk Port - Bus			UEPFP	UEPPO	1.79	106.40	63.08	42.67	18.54		15.69				
	Line Side Unbundled Incoming PBX Trunk Port - Bus			UEPFP	UEPP1	1.79	106.40	63.08	42.67	18.54		15.69				
	2-Wire Voice Unbundled PBX LD Terminal Ports			UEPFP	UEPLD	1.79	106.40	63.08	42.67	18.54		15.69				
	2-Wire Voice Unbundled 2-Way Combination PBX Tennessee Calling Port			UEPFP	UEPT2	1.79	106.40	63.08	42.67	18.54		15.69				
	2-Wire Voice Unbundled 1-Way Outgoing PBX Tennessee Calling Port			UEPFP	UEPTO	1.79	106.40	63.08	42.67	18.54		15.69				
	2-Wire Voice Unbundled 2-Way Combination PBX Usage Port			UEPFP	UEPXA	1.79	106.40	63.08	42.67	18.54		15.69				
	2-Wire Voice Unbundled PBX Toll Terminal Hotel Ports			UEPFP	UEPXB	1.79	106.40	63.08	42.67	18.54		15.69				
	2-Wire Voice Unbundled PBX LD DDD Terminals Port			UEPFP	UEPXC	1.79	106.40	63.08	42.67	18.54		15.69				
	2-Wire Voice Unbundled PBX LD Terminal Switchboard Port			UEPFP	UEPXD	1.79	106.40	63.08	42.67	18.54		15.69				
	2-Wire Voice Unbundled PBX LD Terminal Switchboard IDD Capable Port			UEPFP	UEPXE	1.79	106.40	63.08	42.67	18.54		15.69				
	2-Wire Voice Unbundled 2-Way PBX Hotel/Hospital Economy Administrative Calling Port			UEPFP	UEPXL	1.79	106.40	63.08	42.67	18.54		15.69				
	2-Wire Voice Unbundled 2-Way PBX Hotel/Hospital Economy Room Calling Port			UEPFP	UEPXM	1.79	106.40	63.08	42.67	18.54		15.69				
	2-Wire Voice Unbundled 1W Out PBX Hotel/Hospital Economy Administrative Calling Port TN Calling Port			UEPFP	UEPXN	1.79	106.40	63.08	42.67	18.54		15.69				
	2-Wire Voice Unbundled 1-Way Outgoing PBX Hotel/Hospital Discount Room Calling Port			UEPFP	UEPXO	1.79	106.40	63.08	42.67	18.54		15.69				
	2-Wire Voice Unbundled 1-Way Outgoing PBX Measured Port			UEPFP	UEPXS	1.79	106.40	63.08	42.67	18.54		15.69				
	2-Wire Voice Unbundled PBX Collierville and Memphis Calling Port			UEPFP	UEPXU	1.79	106.40	63.08	42.67	18.54		15.69				
	2-Wire Voice Unbundled 2-Way PBX Tennessee RegionServ Callling Port			UEPFP	UEPXV	1.79	106.40	63.08	42.67	18.54		15.69				
LOCAL NUMBER PORTABILITY																
	Local Number Portability (1 per port)			UEPFP	LNPCP	3.15	0.00	0.00				15.69				
INTEROFFICE TRANSPORT																
	Interoffice Transport - Dedicated - 2 Wire Voice Grade - Facility Termination			UEPFP	U1TV2	18.58	55.39	17.37	27.96	3.51						
	Interoffice Transport - Dedicated - 2 Wire Voice Grade - Per Mile or Fraction Mile			UEPFP	1L5XX	0.0174										
FEATURES																
	All Features Offered			UEPFP	UEPVF	0.00	0.00	0.00				15.69				
NONRECURRING CHARGES (NRCs) - CURRENTLY COMBINED																
	2-Wire Loop / Dedicated IO Transport / 2 Wire Line Port Combination - Conversion - Switch-as-is			UEPFP	USAC2		16.94	3.72				15.69				
	2-Wire Loop / Dedicated IO Transport / 2 Wire Line Port Combination - Conversion - Switch with change			UEPFP	USACC		16.94	3.72				15.69				
	Unbundled Miscellaneous Rate Element, Tag Designed Loop at End User Premise			UEPFP	URETN		11.23	1.10					20.35	10.54	13.32	13.32
UNBUNDLED PORT/LOOP COMBINATIONS - COST BASED RATES																
2-WIRE VOICE GRADE LOOP- BUS ONLY - WITH 2-WIRE DID TRUNK PORT																
UNE Port/Loop Combination Rates																
	2-Wire VG Loop/2-Wire DID Trunk Port Combo - UNE Zone 1		1			18.38										
	2-Wire VG Loop/2-Wire DID Trunk Port Combo - UNE Zone 2		2			19.87										
	2-Wire VG Loop/2-Wire DID Trunk Port Combo - UNE Zone 3		3			24.78										
UNE Loop Rates																
	2-Wire Analog Voice Grade Loop - (SL2) - UNE Zone 1		1	UEPPX	UECD1	9.60										
	2-Wire Analog Voice Grade Loop - (SL2) - UNE Zone 2		2	UEPPX	UECD1	11.09										
	2-Wire Analog Voice Grade Loop - (SL2) - UNE Zone 3		3	UEPPX	UECD1	16.00										
UNE Port Rate																
	Exchange Ports - 2-Wire DID Port			UEPPX	UEPD1	8.78	45.44	29.94	8.45	3.91			30.89	7.03		
NONRECURRING CHARGES - CURRENTLY COMBINED																

UNBUNDLED NETWORK ELEMENTS - Tennessee													Attachment: 2		Exhibit: A	
CATEGORY	RATE ELEMENTS	Interim	Zone	BCS	USOC	RATES ($)					Svc Order Submitted Elec per LSR	Svc Order Submitted Manually per LSR	Incremental Charge - Manual Svc Order vs. Electronic-1st	Incremental Charge - Manual Svc Order vs. Electronic-Add'l	Incremental Charge - Manual Svc Order vs. Electronic-Disc 1st	Incremental Charge - Manual Svc Order vs. Electronic-Disc Add'l
						Rec	Nonrecurring		Nonrecurring Disconnect		OSS Rates ($)					
							First	Add'l	First	Add'l	SOMEC	SOMAN	SOMAN	SOMAN	SOMAN	SOMAN
	2-Wire Voice Grade Loop / 2-Wire DID Trunk Port Combination - Switch-as-is			UEPPX	USAC1		8.76	5.75					30.89	7.03		
	2-Wire Voice Grade Loop / 2-Wire DID Trunk Port Conversion with BellSouth Allowable Changes			UEPPX	USA1C		8.76	5.75					30.89	7.03		
	Unbundled Miscellaneous Rate Element, Tag Designed Loop at End User Premise			UEPPX	URETN		11.23	1.10								
Telephone Number/Trunk Group Establisment Charges																
	DID Trunk Termination (One Per Port)			UEPPX	NDT	0.00	0.00	0.00								
	Additional DID Numbers for each Group of 20 DID Numbers			UEPPX	ND4	0.00	0.00	0.00								
	DID Numbers, Non- consecutive DID Numbers , Per Number			UEPPX	ND5	0.00	0.00	0.00								
	Reserve Non-Consecutive DID numbers			UEPPX	ND6	0.00	0.00	0.00								
	Reserve DID Numbers			UEPPX	NDV	0.00	0.00	0.00								
LOCAL NUMBER PORTABILITY																
	Local Number Portability (1 per port)			UEPPX	LNPCP	3.15	0.00	0.00								
2-WIRE ISDN DIGITAL GRADE LOOP WITH 2-WIRE ISDN DIGITAL LINE SIDE PORT																
UNE Port/Loop Combination Rates																
	2W ISDN Digital Grade Loop/2W ISDN Digital Line Side Port - UNE Zone 1		1	UEPPB UEPPR		32.27										
	2W ISDN Digital Grade Loop/2W ISDN Digital Line Side Port - UNE Zone 2		2	UEPPB UEPPR		34.78										
	2W ISDN Digital Grade Loop/2W ISDN Digital Line Side Port - UNE Zone 3		3	UEPPB UEPPR		44.32										
UNE Loop Rates																
	2-Wire ISDN Digital Grade Loop - UNE Zone 1		1	UEPPB UEPPR	USL2X	16.20										
	2-Wire ISDN Digital Grade Loop - UNE Zone 2		2	UEPPB UEPPR	USL2X	18.71										
	2-Wire ISDN Digital Grade Loop - UNE Zone 3		3	UEPPB UEPPR	USL2X	28.25										
UNE Port Rate																
	Exchange Port - 2-Wire ISDN Line Side Port			UEPPB UEPPR	UEPPB	16.07	141.75	118.37	49.20	43.26			19.99	19.99		
NONRECURRING CHARGES - CURRENTLY COMBINED																
	2-Wire ISDN Digital Grade Loop / 2-Wire ISDN Line Side Port Combination - Conversion			UEPPB UEPPR	USACB	0.00	117.23	117.23					19.99	19.99		
ADDITIONAL NRCs																
	2-Wire ISDN Loop / 2-Wire ISDN Port Combination - Sub Actvy Non Feature/Add Trunk			UEPPB UEPPR	USASB		212.88						19.99	19.99		
	Unbundled Miscellaneous Rate Element, Tag Designed Loop at End User Premise			UEPPB UEPPR	URETN		11.23	1.10								
	Unbundled Miscellaneous Rate Element, Tag Loop at End User Premise			UEPPB UEPPR	URETL		8.33	0.83								
LOCAL NUMBER PORTABILITY																
	Local Number Portability (1 per port)			UEPPB UEPPR	LNPCX	0.35	0.00	0.00								
B-CHANNEL USER PROFILE ACCESS:																
	CVS/CSD (DMS/5ESS)			UEPPB UEPPR	U1UCA	0.00	0.00	0.00								
	CVS (EWSD)			UEPPB UEPPR	U1UCB	0.00	0.00	0.00								
	CSD			UEPPB UEPPR	U1UCC	0.00	0.00	0.00								
B-CHANNEL AREA PLUS USER PROFILE ACCESS: (AL,KY,LA,MS SC,MS, & TN)																
	CVS/CSD (DMS/5ESS)			UEPPB UEPPR	U1UCD	0.00	0.00	0.00								
	CVS (EWSD)			UEPPB UEPPR	U1UCE	0.00	0.00	0.00								
	CSD			UEPPB UEPPR	U1UCF	0.00	0.00	0.00								
USER TERMINAL PROFILE																
	User Terminal Profile (EWSD only)			UEPPB UEPPR	U1UMA	0.00	0.00	0.00								
VERTICAL FEATURES																
	All Vertical Features - One per Channel B User Profile			UEPPB UEPPR	UEPVF	0.00	0.00	0.00								
INTEROFFICE CHANNEL MILEAGE																
	Interoffice Channel mileage each, including first mile and facilities termination			UEPPB UEPPR	M1GNC	17.91	53.99	17.37					19.99	19.99		
	Interoffice Channel mileage each, additional mile			UEPPB UEPPR	M1GNM	0.173	0.00	0.00								
4-WIRE DS1 DIGITAL LOOP WITH 4-WIRE ISDN DS1 DIGITAL TRUNK PORT																
The UNE-P DS1 combination rates below for in this rate exhibit apply to the embedded base in place as of 10/2/03 until 4/1/04. After 4/1/04 these rates shall revert to tariff rates or a separate commercial agreement.																

UNBUNDLED NETWORK ELEMENTS - Tennessee													Attachment: 2		Exhibit: A	
CATEGORY	RATE ELEMENTS	Interim	Zone	BCS	USOC	RATES ($)					Svc Order Submitted Elec per LSR	Svc Order Submitted Manually per LSR	Incremental Charge - Manual Svc Order vs. Electronic-1st	Incremental Charge - Manual Svc Order vs. Electronic-Add'l	Incremental Charge - Manual Svc Order vs. Electronic-Disc 1st	Incremental Charge - Manual Svc Order vs. Electronic-Disc Add'l
						Rec	Nonrecurring		Nonrecurring Disconnect		OSS Rates ($)					
							First	Add'l	First	Add'l	SOMEC	SOMAN	SOMAN	SOMAN	SOMAN	SOMAN
Requests for 4-Wire DS1 Digital Loop with 4-Wire ISDN DS1 Digital Trunk Port after the effective date of this amendment shall be provided pursuant to a separate agreement or tariff at BellSouth's discretion.																
UNE Port/Loop Combination Rates																
	4W DS1 Digital Loop/4W ISDN DS1 Digital Trunk Port - UNE Zone 1		1	UEPPP		132.58										
	4W DS1 Digital Loop/4W ISDN DS1 Digital Trunk Port - UNE Zone 2		2	UEPPP		150.25										
	4W DS1 Digital Loop/4W ISDN DS1 Digital Trunk Port - UNE Zone 3		3	UEPPP		173.44										
UNE Loop Rates																
	4-Wire DS1 Digital Loop - UNE Zone 1		1	UEPPP	USL4P	57.73										
	4-Wire DS1 Digital Loop - UNE Zone 2		2	UEPPP	USL4P	75.40										
	4-Wire DS1 Digital Loop - UNE Zone 3		3	UEPPP	USL4P	98.59										
UNE Port Rate																
	Exchange Ports - 4-Wire ISDN DS1 Port (E:4/1/2004)			UEPPP	UEPPP	74.85	415.53	366.90	89.28	77.43			19.99	19.99		
NONRECURRING CHARGES - CURRENTLY COMBINED																
	4-Wire DS1 Digital Loop / 4-Wire ISDN DS1 Digital Trunk Port Combination - Conversion -Switch-as-is (E:4/1/2004)			UEPPP	USACP	0.00	328.53	328.53					19.99	19.99		
ADDITIONAL NRCs																
	4-Wire DS1 Loop/4-W ISDN Digtl Trk Port - Subsqt Actvy-Inward/two way Tel Nos. (except NC)			UEPPP	PR7TF		0.94						19.99	19.99		
	4-Wire DS1 Loop / 4-Wire ISDN DS1 Digital Trunk Port - Outward Tel Numbers (All States except NC)			UEPPP	PR7TO		22.36	22.36					19.99	19.99		
	4-Wire DS1 Loop / 4-Wire ISDN DS1 Digital Trk Port - Subsequent Inward Tel Numbers			UEPPP	PR7ZT		44.71	44.70					19.99	19.99		
LOCAL NUMBER PORTABILITY																
	Local Number Portability (1 per port)			UEPPP	LNPCN	1.75										
INTERFACE (Provsioning Only)																
	Voice/Data			UEPPP	PR71V	0.00	0.00	0.00								
	Digital Data			UEPPP	PR71D	0.00	0.00	0.00								
	Inward Data			UEPPP	PR71E	0.00	0.00	0.00								
New or Additional "B" Channel																
	New or Additional - Voice/Data B Channel			UEPPP	PR7BV	0.00	28.39						19.99	19.99		
	New or Additional - Digital Data B Channel			UEPPP	PR7BF	0.00	29.11						19.99	19.99		
	New or Additional Inward Data B Channel			UEPPP	PR7BD	0.00	29.39						19.99	19.99		
CALL TYPES																
	Inward			UEPPP	PR7C1	0.00	0.00	0.00								
	Outward			UEPPP	PR7CO	0.00	0.00	0.00								
	Two-way			UEPPP	PR7CC	0.00	0.00	0.00								
Interoffice Channel Mileage																
	Fixed Each Including First Mile			UEPPP	1LN1A	76.1825	145.98	109.85	19.55				19.99	19.99		
	Each Airline-Fractional Additional Mile			UEPPP	1LN1B	0.3525										
4-WIRE DS1 DIGITAL LOOP WITH 4-WIRE DDITS TRUNK PORT																
The UNE-P DS1 combination rates below for in this rate exhibit apply to the embedded base in place as of 10/2/03 until 4/1/04. After 4/1/04 these rates shall revert to tariff rates or a separate commercial agreement.																
Requests for 4-Wire DS1 Digital Loop with 4-Wire DDITS after the effective date of this amendment shall be provided pursuant to a separate agreement or tariff at BellSouth's discretion.																
UNE Port/Loop Combination Rates																
	4W DS1 Digital Loop/4W DDITS Trunk Port - UNE Zone 1		1	UEPDC		93.28							19.99	19.99		
	4W DS1 Digital Loop/4W DDITS Trunk Port - UNE Zone 2		2	UEPDC		110.95							19.99	19.99		
	4W DS1 Digital Loop/4W DDITS Trunk Port - UNE Zone 3		3	UEPDC		134.14							19.99	19.99		
UNE Loop Rates																
	4-Wire DS1 Digital Loop - UNE Zone 1		1	UEPDC	USLDC	57.53										
	4-Wire DS1 Digital Loop - UNE Zone 2		2	UEPDC	USLDC	75.40										
	4-Wire DS1 Digital Loop - UNE Zone 3		3	UEPDC	USLDC	98.59										
UNE Port Rate																
	4-Wire DDITS Digital Trunk Port (E:4/1/2004)			UEPDC	UDD1T	35.55	342.80	257.87	61.41	48.49			19.99	19.99		
NONRECURRING CHARGES - CURRENTLY COMBINED																
	4-Wire DS1 Digital Loop / 4-Wire DDITS Trunk Port Combination - Switch-as-is (E:4/1/2004)			UEPDC	USAC4		312.91	312.91					19.99	19.99		
	4-Wire DS1 Digital Loop / 4-Wire DDITS Trunk Port Combination - Conversion with DS1 Changes (E:4/1/2004)			UEPDC	USAWA		312.91	312.91					19.99	19.99		

UNBUNDLED NETWORK ELEMENTS - Tennessee													Attachment: 2		Exhibit: A	
CATEGORY	RATE ELEMENTS	Interim	Zone	BCS	USOC	RATES ($)					Svc Order Submitted Elec per LSR	Svc Order Submitted Manually per LSR	Incremental Charge - Manual Svc Order vs. Electronic-1st	Incremental Charge - Manual Svc Order vs. Electronic-Add'l	Incremental Charge - Manual Svc Order vs. Electronic-Disc 1st	Incremental Charge - Manual Svc Order vs. Electronic-Disc Add'l
						Rec	Nonrecurring		Nonrecurring Disconnect		OSS Rates ($)					
							First	Add'l	First	Add'l	SOMEC	SOMAN	SOMAN	SOMAN	SOMAN	SOMAN
	4-Wire DS1 Digital Loop / 4-Wire DDITS Trunk Port Combination - Conversion with Change - Trunk (E:4/1/2004)			UEPDC	USAWB		312.91	312.91					19.99	19.99		
ADDITIONAL NRCs																
	4-Wire DS1 Loop / 4-Wire DDITS Trunk Port - Subsequent Service Activity Per Service Order			UEPDC	USAS4		94.88	94.88								
	4-Wire DS1 Loop / 4-Wire DDITS Trunk Port - NRC - Subsequent Channel Activation/Chan - 2-Way Trunk			UEPDC	UDTTA		108.67	108.67					19.99	19.99		
	4-Wire DS1 Loop / 4-Wire DDITS Trunk Port - Subsequent Channel Activation/Chan - 1-Way Outward Trunk			UEPDC	UDTTB		108.67	108.67					19.99	19.99		
	4-Wire DS1 Loop / 4-Wire DDITS Trunk Port - Subsqnt Channel Activation/Chan Inward Trunk w/out DID			UEPDC	UDTTC		108.67	108.67					19.99	19.99		
	4-Wire DS1 Loop / 4-Wire DDITS Trunk Port - Subsqnt Chan Activation Per Chan - Inward Trunk with DID			UEPDC	UDTTD		108.67	108.67					19.99	19.99		
	4-Wire DS1 Loop / 4-Wire DDITS Trunk Port - Subsqnt Chan Activation / Chan - 2-Way DID w User Trans			UEPDC	UDTTE		108.67	108.67					19.99	19.99		
BIPOLAR 8 ZERO SUBSTITUTION																
	B8ZS -Superframe Format			UEPDC	CCOSF		0.00i	590.00s					19.99	19.99		
	B8ZS - Extended Superframe Format			UEPDC	CCOEF		0.00i	590.00s					19.99	19.99		
Alternate Mark Inversion																
	AMI -Superframe Format			UEPDC	MCOSF		0.00	0.00								
	AMI - Extended SuperFrame Format			UEPDC	MCOPO		0.00	0.00								
Telephone Number/Trunk Group Establisment Charges																
	Telephone Number for 2-Way Trunk Group			UEPDC	UDTGX	0.00							19.99	19.99		
	Telephone Number for 1-Way Outward Trunk Group			UEPDC	UDTGY	0.00							19.99	19.99		
	Telephone Number for 1-Way Inward Trunk Group Without DID			UEPDC	UDTGZ	0.00							19.99	19.99		
	DID Numbers for each Group of 20 DID Numbers			UEPDC	ND4	0.00							19.99	19.99		
	DID Numbers, Non- consecutive DID Numbers , Per Number			UEPDC	ND5	0.00							19.99	19.99		
	Reserve Non-Consecutive DID Nos.			UEPDC	ND6	0.00	0.00	0.00								
	Reserve DID Numbers			UEPDC	NDV	0.00	0.00	0.00								
Dedicated DS1 (Interoffice Channel Mileage) - FX/FCO for 4-Wire DS1 Digital Loop with 4-Wire DDITS Trunk Port																
	Interoffice Channel Mileage - Fixed rate 0-8 miles (Facilities Termination)			UEPDC	1LNO1	75.83	145.98	109.85	19.66	14.99						
	Interoffice Channel Mileage - Additional rate per mile - 0-8 miles			UEPDC	1LNOA	0.3525	0.00	0.00								
	Interoffice Channel Mileage - Fixed rate 9-25 miles (Facilities Termination)			UEPDC	1LNO2	0.00	0.00	0.00								
	Interoffice Channel Mileage - Additional rate per mile - 9-25 miles			UEPDC	1LNOB	0.3525	0.00	0.00								
	Interoffice Channel Mileage - Fixed rate 25+ miles (Facilities Termination)			UEPDC	1LNO3	0.00	0.00	0.00								
	Interoffice Channel Mileage - Additional rate per mile - 25+ miles			UEPDC	1LNOC	0.3525	0.00	0.00								
	Local Number Portability, per DS0 Activated			UEPDC	LNPCP	3.15	0.00	0.00								
	Central Office Termininating Point			UEPDC	CTG	0.00										
4-WIRE DS1 LOOP WITH CHANNELIZATION WITH PORT																
System is 1 DS1 Loop, 1 D4 Channel Bank, and up to 24 Feature Activations																
Each System can have up to 24 combinations of rates depending on type and number of ports used																
The UNE-P DS1 combination rates below for 4-Wire DS1 Loop with Channelization with Port in this rate exhibit apply to the embedded base in place as of 10/2/03 until 4/1/04. After 4/1/04 these rates shall revert to tariff rates or a separate agreement.																
Requests for 4-Wire DS1 Loop with Channelization with Port after the effective date of this amendment shall be provided pursuant to a separate agreement or tariff at BellSouth's discretion.																
UNE DS1 Loop																
	4-Wire DS1 Loop - UNE Zone 1		1	UEPMG	USLDC	57.73	0.00	0.00								
	4-Wire DS1 Loop - UNE Zone 2		2	UEPMG	USLDC	75.40	0.00	0.00								
	4-Wire DS1 Loop - UNE Zone 3		3	UEPMG	USLDC	98.59	0.00	0.00								
UNE DSO Channelization Capacities (D4 Channel Bank Configurations)																
	24 DSO Channel Capacity - 1 per DS1			UEPMG	VUM24	131.87	0.00	0.00					19.99	19.99		
	48 DSO Channel Capacity - 1 per 2 DS1s			UEPMG	VUM48	263.74	0.00	0.00					19.99	19.99		
	96 DSO Channel Capacity -1per 4 DS1s			UEPMG	VUM96	527.48	0.00	0.00					19.99	19.99		
	144 DS0 Channel Capacity - 1 per 6 DS1s			UEPMG	VUM14	791.42	0.00	0.00					19.99	19.99		
	192 DS0 Channel Capacity -1 per 8 DS1s			UEPMG	VUM19	827.76	0.00	0.00					19.99	19.99		

UNBUNDLED NETWORK ELEMENTS - Tennessee													Attachment: 2		Exhibit: A	
CATEGORY	RATE ELEMENTS	Interim	Zone	BCS	USOC	RATES ($)					Svc Order Submitted Elec per LSR	Svc Order Submitted Manually per LSR	Incremental Charge - Manual Svc Order vs. Electronic-1st	Incremental Charge - Manual Svc Order vs. Electronic-Add'l	Incremental Charge - Manual Svc Order vs. Electronic-Disc 1st	Incremental Charge - Manual Svc Order vs. Electronic-Disc Add'l
						Rec	Nonrecurring		Nonrecurring Disconnect		OSS Rates ($)					
							First	Add'l	First	Add'l	SOMEC	SOMAN	SOMAN	SOMAN	SOMAN	SOMAN
	240 DS0 Channel Capacity - 1 per 10 DS1s			UEPMG	VUM2O	1,318.70	0.00	0.00					19.99	19.99		
	288 DS0 Channel Capacity - 1 per 12 DS1s			UEPMG	VUM28	1,582.44	0.00	0.00					19.99	19.99		
	384 DS0 Channel Capacity - 1 per 16 DS1s			UEPMG	VUM38	2,109.92	0.00	0.00					19.99	19.99		
	480 DS0 Channel Capacity - 1 per 20 DS1s			UEPMG	VUM4O	2,637.40	0.00	0.00					19.99	19.99		
	576 DS0 Channel Capacity -1 per 24 DS1s			UEPMG	VUM57	3,164.88	0.00	0.00					19.99	19.99		
	672 DS0 Channel Capacity - 1 per 28 DS1s			UEPMG	VUM67	3,692.36	0.00	0.00					19.99	19.99		
	Non-Recurring Charges (NRC) Associated with 4-Wire DS1 Loop with Channeliztion with Port - Conversion Charge Based on a System															
	A Minimum System configuration is One (1) DS1, One (1) D4 Channel Bank, and Up To 24 DSO Ports with Feature Activations.															
	Multiples of this configuration functioning as one are considered Add'l after the minimum system configuration is counted.															
	NRC - Conversion (Currently Combined) with or without BellSouth Allowed Changes			UEPMG	USAC4	0.00	303.61	15.74					19.99	19.99		
	System Additions at End User Locations Where 4-Wire DS1 Loop with Channelization with Port Combination Currently Exists and															
	New (Not Currently Combined) in all states, except in Density Zone 1 of Top 8 MSA's															
	1 DS1/D4 Channel Bank - Additionally Add NRC for each Port and Assoc Fea Activation (E:4/1/2004)			UEPMG	VUMD4	0.00	704.68	441.48	138.36	16.41			19.99			
	Bipolar 8 Zero Substitution															
	Clear Channel Capability Format, superframe - Subsequent Activity Only			UEPMG	CCOSF	0.00	0.00i	590.00s								
	Clear Channel Capability Format - Extended Superframe - Subsequent Activity Only			UEPMG	CCOEF	0.00	0.00i	590.00s								
	Alternate Mark Inversion (AMI)															
	Superframe Format			UEPMG	MCOSF	0.00	0.00	0.00								
	Extended Superframe Format			UEPMG	MCOPO	0.00	0.00	0.00								
	Exchange Ports Associated with 4-Wire DS1 Loop with Channelization with Port															
	Exchange Ports															
	Line Side Combination Channelized PBX Trunk Port - Business (E:4/1/2004)			UEPPX	UEPCX	1.70	0.00	0.00	0.00	0.00			30.89	7.03		
	Line Side Outward Channelized PBX Trunk Port - Business (E:4/1/2004)			UEPPX	UEPOX	1.70	0.00	0.00	0.00	0.00			30.89	7.03		
	Line Side Inward Only Channelized PBX Trunk Port without DID (E:4/1/2004)			UEPPX	UEP1X	1.70	0.00	0.00	0.00	0.00			30.89	7.03		
	2-Wire Trunk Side Unbundled Channelized DID Trunk Port (E:4/1/2004)			UEPPX	UEPDM	8.97	0.00	0.00	0.00	0.00			30.89	7.03		
	Unbundled Exchange Ports, 2-Wire Channelized – Outdial – (AL, KY, LA, MS, & TN)(Conversion from Network Access Service) (E:4/1/2004)			UEPPX	UEPCY	1.70	0.00	0.00	0.00	0.00			30.89	7.03		
	Unbundled Exchange Ports, 2-Wire Channelized – Combination (AL, KY, LA, MS, & TN) (Conversion from Network Access Service) (E:4/1/2004)			UEPPX	UEPCT	1.70	0.00	0.00	0.00	0.00			30.89	7.03		
	Unbundled Exchange Ports, 2-Wire Channelized – Outdial – Tennessee Only – Calling Plan - Regionserv (E:4/1/2004)			UEPPX	UEPCZ	1.70	0.00	0.00	0.00	0.00			30.89	7.03		
	Unbundled Exchange Ports, 2-Wire Channelized – Two Way - Tennessee Only – Calling Plan - Regionserv (E:4/1/2004)			UEPPX	UEPC6	1.70	0.00	0.00	0.00	0.00			30.89	7.03		
	Feature Activations - Unbundled Loop Concentration															
	Feature (Service) Activation for each Line Port Terminated in D4 Bank (includes Q.1.4, P50.1, P.50.498)			UEPPX	1PQWM	2.02	23.94	12.64	3.82	3.80			30.89	7.03		
	Feature (Service) Activation for each Trunk Port Terminated in D4 Bank (includes Q.1.4, P50.1, P.50.498)			UEPPX	1PQWU	2.02	73.67	17.37	54.09	10.57			30.89	7.03		
	Telephone Number/ Group Establishment Charges for DID Service															
	DID Trunk Termination (1 per Port)			UEPPX	NDT	0.00	0.00	0.00								
	DID Numbers - groups of 20 - Valid all States			UEPPX	ND4	0.00	0.00	0.00								
	Non-Consecutive DID Numbers - per number			UEPPX	ND5	0.00	0.00	0.00								
	Reserve Non-Consecutive DID Numbers			UEPPX	ND6	0.00	0.00	0.00								
	Reserve DID Numbers			UEPPX	NDV	0.00	0.00	0.00								
	Local Number Portability															
	Local Number Portability - 1 per port			UEPPX	LNPCP	3.15	0.00	0.00								
	FEATURES - Vertical and Optional															
	Local Switching Features Offered with Line Side Ports Only															
	All Features Available			UEPPX	UEPVF	0.00	0.00	0.00								

UNBUNDLED NETWORK ELEMENTS - Tennessee													Attachment: 2		Exhibit: A	
CATEGORY	RATE ELEMENTS	Interim	Zone	BCS	USOC	RATES ($)					Svc Order Submitted Elec per LSR	Svc Order Submitted Manually per LSR	Incremental Charge - Manual Svc Order vs. Electronic-1st	Incremental Charge - Manual Svc Order vs. Electronic-Add'l	Incremental Charge - Manual Svc Order vs. Electronic-Disc 1st	Incremental Charge - Manual Svc Order vs. Electronic-Disc Add'l
						Rec	Nonrecurring		Nonrecurring Disconnect		OSS Rates ($)					
							First	Add'l	First	Add'l	SOMEC	SOMAN	SOMAN	SOMAN	SOMAN	SOMAN
UNBUNDLED CENTREX PORT/LOOP COMBINATIONS - COST BASED RATES																
1. Cost Based Rates are applied where BellSouth is required by FCC and/or State Commission rule to provide Unbundled Local Switching or Switch Ports.																
2. Features shall apply to the Unbundled Port/Loop Combination - Cost Based Rate section in the same manner as they are applied to the Stand-Alone Unbundled Port section of this Rate Exhibit.																
3. End Office and Tandem Switching Usage and Common Transport Usage rates in the Port section of this rate exhibit shall apply to all combinations of loop/port network elements except for UNE Coin Port/Loop Combinations.																
4. The first and additional Port nonrecurring charges apply to Not Currently Combined Combos. For Currently Combined Combos, the nonrecurring charges shall be those identified in the Nonrecurring - Currently Combined sections. Additional NRCs may apply also and are categorized accordingly.																
5. Market Rates for Unbundled Centrex Port/Loop Combination will be negotiated on an Individual Case Basis, until further notice.																
UNE-P CENTREX - 1AESS - (Valid in AL,FL,GA,KY,LA,MS,&TN only)																
2-Wire VG Loop/2-Wire Voice Grade Port (Centrex) Combo																
UNE Port/Loop Combination Rates (Non-Design)																
	2-Wire VG Loop/2-Wire Voice Grade Port (Centrex) Port Combo - Non-Design		1	UEP91		14.18										
	2-Wire VG Loop/2-Wire Voice Grade Port (Centrex)Port Combo - Non-Design		2	UEP91		18.01										
	2-Wire VG Loop/2-Wire Voice Grade Port (Centrex)Port Combo - Non-Design		3	UEP91		23.02										
UNE Port/Loop Combination Rates (Design)																
	2-Wire VG Loop/2-Wire Voice Grade Port (Centrex) Port Combo - Design		1	UEP91		18.26										
	2-Wire VG Loop/2-Wire Voice Grade Port (Centrex)Port Combo - Design		2	UEP91		23.33										
	2-Wire VG Loop/2-Wire Voice Grade Port (Centrex)Port Combo - Design		3	UEP91		29.98										
UNE Loop Rate																
	2-Wire Voice Grade Loop (SL 1) - Zone 1		1	UEP91	UECS1	12.48										
	2-Wire Voice Grade Loop (SL 1) - Zone 2		2	UEP91	UECS1	16.31										
	2-Wire Voice Grade Loop (SL 1) - Zone 3		3	UEP91	UECS1	21.32										
	2-Wire Voice Grade Loop (SL 2) - Zone 1		1	UEP91	UECS2	16.56										
	2-Wire Voice Grade Loop (SL 2) - Zone 2		2	UEP91	UECS2	21.63										
	2-Wire Voice Grade Loop (SL 2) - Zone 3		3	UEP91	UECS2	28.28										
UNE Ports																
All States (Except North Carolina and Sout Carolina)																
	2-Wire Voice Grade Port (Centrex) Basic Local Area			UEP91	UEPYA	1.70	22.14	15.25	8.45	3.91		30.89	7.03			
	2-Wire Voice Grade Port (Centrex 800 termination)Basic Local Area			UEP91	UEPYB	1.70	22.14	15.25	8.45	3.91		30.89	7.03			
	2-Wire Voice Grade Port (Centrex with Caller ID)Note1 Basic Local Area			UEP91	UEPYH	1.70	22.14	15.25	8.45	3.91		30.89	7.03			
	2-Wire Voice Grade Port (Centrex from diff Serving Wire Center) Note 2, 3 Basic Local Area			UEP91	UEPYM	1.70	22.14	15.25	8.45	3.91		30.89	7.03			
	2-Wire Voice Grade Port, Diff Serving Wire Center - 800 Service Term - Basic Local Area			UEP91	UEPYZ	1.70	22.14	15.25	8.45	3.91		30.89	7.03			
	2-Wire Voice Grade Port terminated in on Megalink or equivalent - Basic Local Area			UEP91	UEPY9	1.70	22.14	15.25	8.45	3.91		30.89	7.03			
	2-Wire Voice Grade Port Terminated on 800 Service Term - Basic Local Area			UEP91	UEPY2	1.70	22.14	15.25	8.45	3.91		30.89	7.03			
AL, KY, LA, MS, & TN Only																
	2-Wire Voice Grade Port (Centrex)			UEP91	UEPQA	1.70	22.14	15.25	8.45	3.91		30.89	7.03			
	2-Wire Voice Grade Port (Centrex 800 termination)			UEP91	UEPQB	1.70	22.14	15.25	8.45	3.91		30.89	7.03			
	2-Wire Voice Grade Port (Centrex with Caller ID)1			UEP91	UEPQH	1.70	22.14	15.25	8.45	3.91		30.89	7.03			
	2-Wire Voice Grade Port (Centrex from diff Serving Wire Center)2,3			UEP91	UEPQM	1.70	22.14	15.25	8.45	3.91		30.89	7.03			
	2-Wire Voice Grade Port, Diff Serving Wire Center - 2,3 - 800 Service Term			UEP91	UEPQZ	1.70	22.14	15.25	8.45	3.91		30.89	7.03			
	2-Wire Voice Grade Port terminated in on Megalink or equivalent			UEP91	UEPQ9	1.70	22.14	15.25	8.45	3.91		30.89	7.03			
	2-Wire Voice Grade Port Terminated on 800 Service Term			UEP91	UEPQ2	1.70	22.14	15.25	8.45	3.91		30.89	7.03			
Local Switching																
	Centrex Intercom Funtionality, per port			UEP91	URECS	0.6381										
Local Number Portability																

UNBUNDLED NETWORK ELEMENTS - Tennessee														Attachment: 2		Exhibit: A	
CATEGORY		RATE ELEMENTS	Interim	Zone	BCS	USOC	RATES ($)					Svc Order Submitted Elec per LSR	Svc Order Submitted Manually per LSR	Incremental Charge - Manual Svc Order vs. Electronic-1st	Incremental Charge - Manual Svc Order vs. Electronic-Add'l	Incremental Charge - Manual Svc Order vs. Electronic-Disc 1st	Incremental Charge - Manual Svc Order vs. Electronic-Disc Add'l
							Rec	Nonrecurring		Nonrecurring Disconnect		OSS Rates ($)					
								First	Add'l	First	Add'l	SOMEC	SOMAN	SOMAN	SOMAN	SOMAN	SOMAN
		Local Number Portability (1 per port)			UEP91	LNPCC	0.35										
	Features																
		All Standard Features Offered, per port			UEP91	UEPVF	0.00						30.89	7.03			
		All Select Features Offered, per port			UEP91	UEPVS	0.00	433.78					30.89	7.03			
		All Centrex Control Features Offered, per port			UEP91	UEPVC	0.00						30.89	7.03			
	NARS																
		Unbundled Network Access Register - Combination			UEP91	UARCX	0.00	0.00	0.00	0.00	0.00		0.00	7.03			
		Unbundled Network Access Register - Indial			UEP91	UAR1X	0.00	0.00	0.00	0.00	0.00		0.00	7.03			
		Unbundled Network Access Register - Outdial			UEP91	UAROX	0.00	0.00	0.00	0.00	0.00		0.00	7.03			
	Miscellaneous Terminations																
	2-Wire Trunk Side																
		Trunk Side Terminations, each			UEP91	CENA6	8.78	22.14	15.25	8.45	3.91		30.89	7.03			
	Interoffice Channel Mileage - 2-Wire																
		Interoffice Channel Facilities Termination - Voice Grade			UEP91	M1GBC	18.58	22.14	15.25	8.45	3.91		30.89	7.03			
		Interoffice Channel mileage, per mile or fraction of mile			UEP91	M1GBM	0.0174										
	Feature Activations (DS0) Centrex Loops on Channelized DS1 Service																
	D4 Channel Bank Feature Activations																
		Feature Activation on D-4 Channel Bank Centrex Loop Slot			UEP91	1PQWS	0.66										
		Feature Activation on D-4 Channel Bank FX line Side Loop Slot			UEP91	1PQW6	0.66										
		Feature Activation on D-4 Channel Bank FX Trunk Side Loop Slot			UEP91	1PQW7	0.66										
		Feature Activation on D-4 Channel Bank Centrex Loop Slot - Different Wire Center			UEP91	1PQWP	0.66										
		Feature Activation on D-4 Channel Bank Private Line Loop Slot			UEP91	1PQWV	0.66										
		Feature Activation on D-4 Channel Bank Tjie Line/Trunk Loop Slot			UEP91	1PQWQ	0.66										
		Feature Activation on D-4 Channel Bank WATS Loop Slot			UEP91	1PQWA	0.66										
	Non-Recurring Charges (NRC) Associated with UNE-P Centrex																
		Conversion - Currently Combined Switch-As-Is with allowed changes, per port			UEP91	USAC2		1.03	0.29				30.89	7.03			
		New Centrex Standard Common Block			UEP91	M1ACS	0.00	658.60					30.89	7.03			
		New Centrex Customized Common Block			UEP91	M1ACC	0.00	658.60					30.89	7.03			
		Secondary Block, per Block			UEP91	M2CC1	0.00	73.55					30.89	7.03			
		NAR Establishment Charge, Per Occasion			UEP91	URECA		68.57					30.89	7.03			
	Additional Non-Recurring Charges (NRC)																
		Unbundled Miscellaneous Rate Element, Tag Loop at End Use Premise			UEP91	URETL		8.33	0.83								
		Unbundled Miscellaneous Rate Element, Tag Design Loop at End Use Premise			UEP91	URETN		11.23	1.10								
	UNE-P CENTREX - 5ESS (Valid in All States)																
	2-Wire VG Loop/2-Wire Voice Grade Port (Centrex) Combo																
	UNE Port/Loop Combination Rates (Non-Design)																
		2-Wire VG Loop/2-Wire Voice Grade Port (Centrex) Port Combo - Non-Design		1	UEP95		14.18										
		2-Wire VG Loop/2-Wire Voice Grade Port (Centrex)Port Combo - Non-Design		2	UEP95		18.01										
		2-Wire VG Loop/2-Wire Voice Grade Port (Centrex)Port Combo - Non-Design		3	UEP95		23.02										
	UNE Port/Loop Combination Rates (Design)																
		2-Wire VG Loop/2-Wire Voice Grade Port (Centrex) Port Combo - Design		1	UEP95		18.26										
		2-Wire VG Loop/2-Wire Voice Grade Port (Centrex)Port Combo - Design		2	UEP95		23.33										
		2-Wire VG Loop/2-Wire Voice Grade Port (Centrex)Port Combo - Design		3	UEP95		29.98										
	UNE Loop Rate																
		2-Wire Voice Grade Loop (SL 1) - Zone 1		1	UEP95	UECS1	12.48										

UNBUNDLED NETWORK ELEMENTS - Tennessee														Attachment: 2		Exhibit: A	
CATEGORY	RATE ELEMENTS	Interim	Zone	BCS	USOC	RATES ($)					Svc Order Submitted Elec per LSR	Svc Order Submitted Manually per LSR	Incremental Charge - Manual Svc Order vs. Electronic-1st	Incremental Charge - Manual Svc Order vs. Electronic-Add'l	Incremental Charge - Manual Svc Order vs. Electronic-Disc 1st	Incremental Charge - Manual Svc Order vs. Electronic-Disc Add'l
						Rec	Nonrecurring		Nonrecurring Disconnect		OSS Rates ($)					
							First	Add'l	First	Add'l	SOMEC	SOMAN	SOMAN	SOMAN	SOMAN	SOMAN
	2-Wire Voice Grade Loop (SL 1) - Zone 2		2	UEP95	UECS1	16.31										
	2-Wire Voice Grade Loop (SL 1) - Zone 3		3	UEP95	UECS1	21.32										
	2-Wire Voice Grade Loop (SL 2) - Zone 1		1	UEP95	UECS2	16.56										
	2-Wire Voice Grade Loop (SL 2) - Zone 2		2	UEP95	UECS2	21.63										
	2-Wire Voice Grade Loop (SL 2) - Zone 3		3	UEP95	UECS2	28.28										
UNE Port Rate																
All States																
	2-Wire Voice Grade Port (Centrex) Basic Local Area			UEP95	UEPYA	1.70	22.14	15.25	8.45	3.91		30.89	7.03			
	2-Wire Voice Grade Port (Centrex 800 termination)			UEP95	UEPYB	1.70	22.14	15.25	8.45	3.91		30.89	7.03			
	2-Wire Voice Grade Port (Centrex with Caller ID)1Basic Local Area			UEP95	UEPYH	1.70	22.14	15.25	8.45	3.91		30.89	7.03			
	2-Wire Voice Grade Port (Centrex from diff Serving Wire Center)2,3 Basic Local Area			UEP95	UEPYM	1.70	22.14	15.25	8.45	3.91		30.89	7.03			
	2-Wire Voice Grade Port, Diff Serving Wire Center 2,3 - 800 Service Term - Basic Local Area			UEP95	UEPYZ	1.70	22.14	15.25	8.45	3.91		30.89	7.03			
	2-Wire Voice Grade Port terminated in on Megalink or equivalent - Basic Local Area			UEP95	UEPY9	1.70	22.14	15.25	8.45	3.91		30.89	7.03			
	2-Wire Voice Grade Port Terminated on 800 Service Term - Basic Local Area			UEP95	UEPY2	1.70	22.14	15.25	8.45	3.91		30.89	7.03			
AL, KY, LA, MS, SC, & TN Only																
	2-Wire Voice Grade Port (Centrex)			UEP95	UEPQA	1.70	22.14	15.25	8.45	3.91		30.89	7.03			
	2-Wire Voice Grade Port (Centrex 800 termination)			UEP95	UEPQB	1.70	22.14	15.25	8.45	3.91		30.89	7.03			
	2-Wire Voice Grade Port (Centrex with Caller ID)1			UEP95	UEPQH	1.70	22.14	15.25	8.45	3.91		30.89	7.03			
	2-Wire Voice Grade Port (Centrex from diff Serving Wire Center)2,3			UEP95	UEPQM	1.70	22.14	15.25	8.45	3.91		30.89	7.03			
	2-Wire Voice Grade Port, Diff Serving Wire Center - 800 Service Term 2,3			UEP95	UEPQZ	1.70	22.14	15.25	8.45	3.91		30.89	7.03			
	2-Wire Voice Grade Port terminated in on Megalink or equivalent			UEP95	UEPQ9	1.70	22.14	15.25	8.45	3.91		30.89	7.03			
	2-Wire Voice Grade Port Terminated on 800 Service Term			UEP95	UEPQ2	1.70	22.14	15.25	8.45	3.91		30.89	7.03			
FL & GA Only																
Local Switching																
	Centrex Intercom Funtionality, per port			UEP95	URECS	0.6381										
Local Number Portability																
	Local Number Portability (1 per port)			UEP95	LNPCC	0.35										
Features																
	All Standard Features Offered, per port			UEP95	UEPVF	0.00						30.89	7.03			
	All Select Features Offered, per port			UEP95	UEPVS	0.00	433.78					30.89	7.03			
	All Centrex Control Features Offered, per port			UEP95	UEPVC	0.00						30.89	7.03			
NARS																
	Unbundled Network Access Register - Combination			UEP95	UARCX	0.00	0.00	0.00	0.00	0.00		0.00	7.03			
	Unbundled Network Access Register - Indial			UEP95	UAR1X	0.00	0.00	0.00	0.00	0.00		0.00	7.03			
	Unbundled Network Access Register - Outdial			UEP95	UAROX	0.00	0.00	0.00	0.00	0.00		0.00	7.03			
Miscellaneous Terminations																
2-Wire Trunk Side																
	Trunk Side Terminations, each			UEP95	CEND6	8.78	47.75	47.01	9.21	8.47		30.89	7.03			
4-Wire Digital (1.544 Megabits)																
	DS1 Circuit Terminations, each			UEP95	M1HD1	35.55	75.93	38.15				30.89	7.03			
	DS0 Channels Activated, each			UEP95	M1HDO	0.00	108.67					30.89	7.03			
Interoffice Channel Mileage - 2-Wire																
	Interoffice Channel Facilities Termination			UEP95	M1GBC	18.58	22.14	15.25	8.45	3.91		30.89	7.03			
	Interoffice Channel mileage, per mile or fraction of mile			UEP95	M1GBM	0.0174										
Feature Activations (DS0) Centrex Loops on Channelized DS1 Service																
D4 Channel Bank Feature Activations																
	Feature Activation on D-4 Channel Bank Centrex Loop Slot			UEP95	1PQWS	0.66										
	Feature Activation on D-4 Channel Bank FX line Side Loop Slot			UEP95	1PQW6	0.66										
	Feature Activation on D-4 Channel Bank FX Trunk Side Loop Slot			UEP95	1PQW7	0.66										

UNBUNDLED NETWORK ELEMENTS - Tennessee														Attachment: 2		Exhibit: A	
CATEGORY		RATE ELEMENTS	Interim	Zone	BCS	USOC	RATES ($)					Svc Order Submitted Elec per LSR	Svc Order Submitted Manually per LSR	Incremental Charge - Manual Svc Order vs. Electronic-1st	Incremental Charge - Manual Svc Order vs. Electronic-Add'l	Incremental Charge - Manual Svc Order vs. Electronic-Disc 1st	Incremental Charge - Manual Svc Order vs. Electronic-Disc Add'l
							Rec	Nonrecurring		Nonrecurring Disconnect		OSS Rates ($)					
								First	Add'l	First	Add'l	SOMEC	SOMAN	SOMAN	SOMAN	SOMAN	SOMAN
		Feature Activation on D-4 Channel Bank Centrex Loop Slot - Different Wire Center			UEP95	1PQWP	0.66										
		Feature Activation on D-4 Channel Bank Private Line Loop Slot			UEP95	1PQWV	0.66										
		Feature Activation on D-4 Channel Bank Tjie Line/Trunk Loop Slot			UEP95	1PQWQ	0.66										
		Feature Activation on D-4 Channel Bank WATS Loop Slot			UEP95	1PQWA	0.66										
	Non-Recurring Charges (NRC) Associated with UNE-P Centrex																
		NRC Conversion Currently Combined Switch-As-Is with allowed changes, per port			UEP95	USAC2		1.03	0.29				30.89	7.03			
		New Centrex Standard Common Block			UEP95	M1ACS	0.00	658.60					30.89	7.03			
		New Centrex Customized Common Block			UEP95	M1ACC	0.00	658.60					30.89	7.03			
		NAR Establishment Charge, Per Occasion			UEP95	URECA	0.00	68.57					30.89	7.03			
	Additional Non-Recurring Charges (NRC)																
		Unbundled Miscellaneous Rate Element, Tag Loop at End Use Premise			UEP95	URETL		8.33	0.83								
		Unbundled Miscellaneous Rate Element, Tag Design Loop at End Use Premise			UEP95	URETN		11.23	1.10								
	UNE-P CENTREX - DMS100 (Valid in All States)																
	2-Wire VG Loop/2-Wire Voice Grade Port (Centrex) Combo																
	UNE Port/Loop Combination Rates (Non-Design)																
		2-Wire VG Loop/2-Wire Voice Grade Port (Centrex) Port Combo - Non-Design		1	UEP9D		14.18										
		2-Wire VG Loop/2-Wire Voice Grade Port (Centrex)Port Combo - Non-Design		2	UEP9D		18.01										
		2-Wire VG Loop/2-Wire Voice Grade Port (Centrex)Port Combo - Non-Design		3	UEP9D		23.02										
	UNE Port/Loop Combination Rates (Design)																
		2-Wire VG Loop/2-Wire Voice Grade Port (Centrex) Port Combo - Design		1	UEP9D		18.26										
		2-Wire VG Loop/2-Wire Voice Grade Port (Centrex)Port Combo - Design		2	UEP9D		23.33										
		2-Wire VG Loop/2-Wire Voice Grade Port (Centrex)Port Combo - Design		3	UEP9D		29.98										
	UNE Loop Rate																
		2-Wire Voice Grade Loop (SL 1) - Zone 1		1	UEP9D	UECS1	12.48										
		2-Wire Voice Grade Loop (SL 1) - Zone 2		2	UEP9D	UECS1	16.31										
		2-Wire Voice Grade Loop (SL 1) - Zone 3		3	UEP9D	UECS1	21.32										
		2-Wire Voice Grade Loop (SL 2) - Zone 1		1	UEP9D	UECS2	16.56										
		2-Wire Voice Grade Loop (SL 2) - Zone 2		2	UEP9D	UECS2	21.63										
		2-Wire Voice Grade Loop (SL 2) - Zone 3		3	UEP9D	UECS2	28.28										
	UNE Port Rate																
	ALL STATES																
		2-Wire Voice Grade Port (Centrex) Basic Local Area			UEP9D	UEPYA	1.70	22.14	15.25	8.45	3.91		30.89	7.03			
		2-Wire Voice Grade Port (Centrex 800 termination)Basic Local Area			UEP9D	UEPYB	1.70	22.14	15.25	8.45	3.91		30.89	7.03			
		2-Wire Voice Grade Port (Centrex / EBS-PSET)3Basic Local Area			UEP9D	UEPYC	1.70	22.14	15.25	8.45	3.91		30.89	7.03			
		2-Wire Voice Grade Port (Centrex / EBS-M5009)3Basic Local Area			UEP9D	UEPYD	1.70	22.14	15.25	8.45	3.91		30.89	7.03			
		2-Wire Voice Grade Port (Centrex / EBS-M5209))3 Basic Local Area			UEP9D	UEPYE	1.70	22.14	15.25	8.45	3.91		30.89	7.03			
		2-Wire Voice Grade Port (Centrex / EBS-M5112))3 Basic Local Area			UEP9D	UEPYF	1.70	22.14	15.25	8.45	3.91		30.89	7.03			
		2-Wire Voice Grade Port (Centrex / EBS-M5312))3Basic Local Area			UEP9D	UEPYG	1.70	22.14	15.25	8.45	3.91		30.89	7.03			
		2-Wire Voice Grade Port (Centrex / EBS-M5008))3 Basic Local Area			UEP9D	UEPYT	1.70	22.14	15.25	8.45	3.91		30.89	7.03			

UNBUNDLED NETWORK ELEMENTS - Tennessee														Attachment: 2		Exhibit: A	
CATEGORY		RATE ELEMENTS	Interim	Zone	BCS	USOC	RATES ($)					Svc Order Submitted Elec per LSR	Svc Order Submitted Manually per LSR	Incremental Charge - Manual Svc Order vs. Electronic-1st	Incremental Charge - Manual Svc Order vs. Electronic-Add'l	Incremental Charge - Manual Svc Order vs. Electronic-Disc 1st	Incremental Charge - Manual Svc Order vs. Electronic-Disc Add'l
							Rec	Nonrecurring		Nonrecurring Disconnect		OSS Rates ($)					
								First	Add'l	First	Add'l	SOMEC	SOMAN	SOMAN	SOMAN	SOMAN	SOMAN
		2-Wire Voice Grade Port (Centrex / EBS-M5208))3 Basic Local Area			UEP9D	UEPYU	1.70	22.14	15.25	8.45	3.91		30.89	7.03			
		2-Wire Voice Grade Port (Centrex / EBS-M5216))3 Basic Local Area			UEP9D	UEPYV	1.70	22.14	15.25	8.45	3.91		30.89	7.03			
		2-Wire Voice Grade Port (Centrex / EBS-M5316))3 Basic Local Area			UEP9D	UEPY3	1.70	22.14	15.25	8.45	3.91		30.89	7.03			
		2-Wire Voice Grade Port (Centrex with Caller ID) Basic Local Area			UEP9D	UEPYH	1.70	22.14	15.25	8.45	3.91		30.89	7.03			
		2-Wire Voice Grade Port (Centrex/Caller ID/Msg Wtg Lamp Indication))4 Basic Local Area			UEP9D	UEPYW	1.70	22.14	15.25	8.45	3.91		30.89	7.03			
		2-Wire Voice Grade Port (Centrex/Msg Wtg Lamp Indication))4 Basic Local Area			UEP9D	UEPYJ	1.70	22.14	15.25	8.45	3.91		30.89	7.03			
		2-Wire Voice Grade Port (Centrex from diff Serving Wire Center) 2,3-Basic Local Area			UEP9D	UEPYM	1.70	22.14	15.25	8.45	3.91		30.89	7.03			
		2-Wire Voice Grade Port (Centrex/differ SWC /EBS-PSET)2,3,4 Basic Local Area			UEP9D	UEPYO	1.70	22.14	15.25	8.45	3.91		30.89	7.03			
		2-Wire Voice Grade Port (Centrex/differ SWC /EBS-M5009)2,3,4 Basic Local Area			UEP9D	UEPYP	1.70	22.14	15.25	8.45	3.91		30.89	7.03			
		2-Wire Voice Grade Port (Centrex/differ SWC /EBS-5209)2,3,4 Basic Local Area			UEP9D	UEPYQ	1.70	22.14	15.25	8.45	3.91		30.89	7.03			
		2-Wire Voice Grade Port (Centrex/differ SWC /EBS-M5112)2,3,4 Basic Local Area			UEP9D	UEPYR	1.70	22.14	15.25	8.45	3.91		30.89	7.03			
		2-Wire Voice Grade Port (Centrex/differ SWC /EBS-M5312)2,3,4 Basic Local Area			UEP9D	UEPYS	1.70	22.14	15.25	8.45	3.91		30.89	7.03			
		2-Wire Voice Grade Port (Centrex/differ SWC /EBS-M5008)2,3,4 Basic Local Area			UEP9D	UEPY4	1.70	22.14	15.25	8.45	3.91		30.89	7.03			
		2-Wire Voice Grade Port (Centrex/differ SWC /EBS-M5208)2, 3 Basic Local Area			UEP9D	UEPY5	1.70	22.14	15.25	8.45	3.91		30.89	7.03			
		2-Wire Voice Grade Port (Centrex/differ SWC /EBS-M5216)2,3,4 Basic Local Area			UEP9D	UEPY6	1.70	22.14	15.25	8.45	3.91		30.89	7.03			
		2-Wire Voice Grade Port (Centrex/differ SWC /EBS-M5316)2,3,4 Basic Local Area			UEP9D	UEPY7	1.70	22.14	15.25	8.45	3.91		30.89	7.03			
		2-Wire Voice Grade Port, Diff Serving Wire Center - 800 Service Term 2,3			UEP9D	UEPYZ	1.70	22.14	15.25	8.45	3.91		30.89	7.03			
		2-Wire Voice Grade Port terminated in on Megalink or equivalent Basic Local Area			UEP9D	UEPY9	1.70	22.14	15.25	8.45	3.91		30.89	7.03			
		2-Wire Voice Grade Port Terminated on 800 Service Term Basic Local Area			UEP9D	UEPY2	1.70	22.14	15.25	8.45	3.91		30.89	7.03			
	AL, KY, LA, MS, SC, & TN Only																
		2-Wire Voice Grade Port (Centrex)			UEP9D	UEPQA	1.70	22.14	15.25	8.45	3.91		30.89	7.03			
		2-Wire Voice Grade Port (Centrex 800 termination)			UEP9D	UEPQB	1.70	22.14	15.25	8.45	3.91		30.89	7.03			
		2-Wire Voice Grade Port (Centrex / EBS-PSET)4			UEP9D	UEPQC	1.70	22.14	15.25	8.45	3.91		30.89	7.03			
		2-Wire Voice Grade Port (Centrex / EBS-M5009)4			UEP9D	UEPQD	1.70	22.14	15.25	8.45	3.91		30.89	7.03			
		2-Wire Voice Grade Port (Centrex / EBS-M5209)4			UEP9D	UEPQE	1.70	22.14	15.25	8.45	3.91		30.89	7.03			
		2-Wire Voice Grade Port (Centrex / EBS-M5112)4			UEP9D	UEPQF	1.70	22.14	15.25	8.45	3.91		30.89	7.03			
		2-Wire Voice Grade Port (Centrex / EBS-M5312)4			UEP9D	UEPQG	1.70	22.14	15.25	8.45	3.91		30.89	7.03			
		2-Wire Voice Grade Port (Centrex / EBS-M5008)4			UEP9D	UEPQT	1.70	22.14	15.25	8.45	3.91		30.89	7.03			
		2-Wire Voice Grade Port (Centrex / EBS-M5208)4			UEP9D	UEPQU	1.70	22.14	15.25	8.45	3.91		30.89	7.03			
		2-Wire Voice Grade Port (Centrex / EBS-M5216)4			UEP9D	UEPQV	1.70	22.14	15.25	8.45	3.91		30.89	7.03			
		2-Wire Voice Grade Port (Centrex / EBS-M5316)4			UEP9D	UEPQ3	1.70	22.14	15.25	8.45	3.91		30.89	7.03			
		2-Wire Voice Grade Port (Centrex with Caller ID)			UEP9D	UEPQH	1.70	22.14	15.25	8.45	3.91		30.89	7.03			
		2-Wire Voice Grade Port (Centrex/Caller ID/Msg Wtg Lamp Indication)4			UEP9D	UEPQW	1.70	22.14	15.25	8.45	3.91		30.89	7.03			
		2-Wire Voice Grade Port (Centrex/Msg Wtg Lamp Indication)4			UEP9D	UEPQJ	1.70	22.14	15.25	8.45	3.91		30.89	7.03			
		2-Wire Voice Grade Port (Centrex from diff Serving Wire Center) 2,3			UEP9D	UEPQM	1.70	22.14	15.25	8.45	3.91		30.89	7.03			
		2-Wire Voice Grade Port (Centrex/differ SWC /EBS-PSET)2,3,4			UEP9D	UEPQO	1.70	22.14	15.25	8.45	3.91		30.89	7.03			

UNBUNDLED NETWORK ELEMENTS - Tennessee														Attachment: 2		Exhibit: A	
CATEGORY		RATE ELEMENTS	Interim	Zone	BCS	USOC	RATES ($)					Svc Order Submitted Elec per LSR	Svc Order Submitted Manually per LSR	Incremental Charge - Manual Svc Order vs. Electronic-1st	Incremental Charge - Manual Svc Order vs. Electronic-Add'l	Incremental Charge - Manual Svc Order vs. Electronic-Disc 1st	Incremental Charge - Manual Svc Order vs. Electronic-Disc Add'l
							Rec	Nonrecurring		Nonrecurring Disconnect		OSS Rates ($)					
								First	Add'l	First	Add'l	SOMEC	SOMAN	SOMAN	SOMAN	SOMAN	SOMAN
		2-Wire Voice Grade Port (Centrex/differ SWC /EBS-M5009)2,3,4			UEP9D	UEPQP	1.70	22.14	15.25	8.45	3.91		30.89	7.03			
		2-Wire Voice Grade Port (Centrex/differ SWC /EBS-5209)2,3,4			UEP9D	UEPQQ	1.70	22.14	15.25	8.45	3.91		30.89	7.03			
		2-Wire Voice Grade Port (Centrex/differ SWC /EBS-M5112)2,3,4			UEP9D	UEPQR	1.70	22.14	15.25	8.45	3.91		30.89	7.03			
		2-Wire Voice Grade Port (Centrex/differ SWC /EBS-M5312)2,3,4			UEP9D	UEPQS	1.70	22.14	15.25	8.45	3.91		30.89	7.03			
		2-Wire Voice Grade Port (Centrex/differ SWC /EBS-M5008)2,3,4			UEP9D	UEPQ4	1.70	22.14	15.25	8.45	3.91		30.89	7.03			
		2-Wire Voice Grade Port (Centrex/differ SWC /EBS-M5208)2,3,4			UEP9D	UEPQ5	1.70	22.14	15.25	8.45	3.91		30.89	7.03			
		2-Wire Voice Grade Port (Centrex/differ SWC /EBS-M5216)2,3,4			UEP9D	UEPQ6	1.70	22.14	15.25	8.45	3.91		30.89	7.03			
		2-Wire Voice Grade Port (Centrex/differ SWC /EBS-M5316)2,3,4			UEP9D	UEPQ7	1.70	22.14	15.25	8.45	3.91		30.89	7.03			
		2-Wire Voice Grade Port, Diff Serving Wire Center - 800 Service Term 2,3			UEP9D	UEPQZ	1.70	22.14	15.25	8.45	3.91		30.89	7.03			
		2-Wire Voice Grade Port terminated in on Megalink or equivalent			UEP9D	UEPQ9	1.70	22.14	15.25	8.45	3.91		30.89	7.03			
		2-Wire Voice Grade Port Terminated on 800 Service Term			UEP9D	UEPQ2	1.70	22.14	15.25	8.45	3.91		30.89	7.03			
	Local Switching																
		Centrex Intercom Funtionality, per port			UEP9D	URECS	0.6381										
	Local Number Portability																
		Local Number Portability (1 per port)			UEP9D	LNPCC	0.35										
	Features																
		All Standard Features Offered, per port			UEP9D	UEPVF	0.00						30.89	7.03			
		All Select Features Offered, per port			UEP9D	UEPVS	0.00	433.78					30.89	7.03			
		All Centrex Control Features Offered, per port			UEP9D	UEPVC	0.00						30.89	7.03			
	NARS																
		Unbundled Network Access Register - Combination			UEP9D	UARCX	0.00	0.00	0.00	0.00	0.00		0.00	7.03			
		Unbundled Network Access Register - Inward			UEP9D	UAR1X	0.00	0.00	0.00	0.00	0.00		0.00	7.03			
		Unbundled Network Access Register - Outdial			UEP9D	UAROX	0.00	0.00	0.00	0.00	0.00		0.00	7.03			
	Miscellaneous Terminations																
	2-Wire Trunk Side																
		Trunk Side Terminations, each			UEP9D	CEND6	8.78	22.14	15.25	8.45	3.91		30.89	7.03			
	4-Wire Digital (1.544 Megabits)																
		DS1 Circuit Terminations, each			UEP9D	M1HD1	35.55	75.93	38.15				30.89	7.03			
		DS0 Channels Activiated per Channel			UEP9D	M1HDO	0.00	108.67					30.89	7.03			
	Interoffice Channel Mileage - 2-Wire																
		Interoffice Channel Facilities Termination			UEP9D	M1GBC	18.58	22.14	15.25	8.45	3.91		30.89	7.03			
		Interoffice Channel mileage, per mile or fraction of mile			UEP9D	M1GBM	0.0174										
	Feature Activations (DS0) Centrex Loops on Channelized DS1 Service																
	D4 Channel Bank Feature Activations																
		Feature Activation on D-4 Channel Bank Centrex Loop Slot			UEP9D	1PQWS	0.66										
		Feature Activation on D-4 Channel Bank FX line Side Loop Slot			UEP9D	1PQW6	0.66										
		Feature Activation on D-4 Channel Bank FX Trunk Side Loop Slot			UEP9D	1PQW7	0.66										
		Feature Activation on D-4 Channel Bank Centrex Loop Slot - Different Wire Center			UEP9D	1PQWP	0.66										
		Feature Activation on D-4 Channel Bank Private Line Loop Slot			UEP9D	1PQWV	0.66										
		Feature Activation on D-4 Channel Bank Tjie Line/Trunk Loop Slot			UEP9D	1PQWQ	0.66										
		Feature Activation on D-4 Channel Bank WATS Loop Slot			UEP9D	1PQWA	0.66										
	Non-Recurring Charges (NRC) Associated with UNE-P Centrex																
		NRC Conversion Currently Combined Switch-As-Is with allowed changes, per port			UEP9D	USAC2		1.03	0.29				30.89	7.03			

UNBUNDLED NETWORK ELEMENTS - Tennessee														Attachment: 2		Exhibit: A	
CATEGORY	RATE ELEMENTS	Interim	Zone	BCS	USOC	RATES ($)					Svc Order Submitted Elec per LSR	Svc Order Submitted Manually per LSR	Incremental Charge - Manual Svc Order vs. Electronic-1st	Incremental Charge - Manual Svc Order vs. Electronic-Add'l	Incremental Charge - Manual Svc Order vs. Electronic-Disc 1st	Incremental Charge - Manual Svc Order vs. Electronic-Disc Add'l
						Rec	Nonrecurring		Nonrecurring Disconnect		OSS Rates ($)					
							First	Add'l	First	Add'l	SOMEC	SOMAN	SOMAN	SOMAN	SOMAN	SOMAN
	New Centrex Standard Common Block			UEP9D	M1ACS	0.00	658.60					30.89	7.03			
	New Centrex Customized Common Block			UEP9D	M1ACC	0.00	658.60					30.89	7.03			
	NAR Establishment Charge, Per Occasion			UEP9D	URECA		68.57					30.89	7.03			
Additional Non-Recurring Charges (NRC)																
	Unbundled Miscellaneous Rate Element, Tag Loop at End Use Premise			UEP9D	URETL		8.33	0.83								
	Unbundled Miscellaneous Rate Element, Tag Design Loop at End Use Premise			UEP9D	URETN		11.23	1.10								
UNE-P CENTREX - EWSD (Valid in AL, FL, KY, LA, MS & TN)																
2-Wire VG Loop/2-Wire Voice Grade Port (Centrex) Combo																
UNE Port/Loop Combination Rates (Non-Design)																
	2-Wire VG Loop/2-Wire Voice Grade Port (Centrex) Port Combo - Non-Design		1	UEP9E		14.18										
	2-Wire VG Loop/2-Wire Voice Grade Port (Centrex)Port Combo - Non-Design		2	UEP9E		18.01										
	2-Wire VG Loop/2-Wire Voice Grade Port (Centrex)Port Combo - Non-Design		3	UEP9E		23.02										
UNE Port/Loop Combination Rates (Design)																
	2-Wire VG Loop/2-Wire Voice Grade Port (Centrex) Port Combo - Design		1	UEP9E		18.26										
	2-Wire VG Loop/2-Wire Voice Grade Port (Centrex)Port Combo - Design		2	UEP9E		23.33										
	2-Wire VG Loop/2-Wire Voice Grade Port (Centrex)Port Combo - Design		3	UEP9E		29.98										
UNE Loop Rate																
	2-Wire Voice Grade Loop (SL 1) - Zone 1		1	UEP9E	UECS1	12.48										
	2-Wire Voice Grade Loop (SL 1) - Zone 2		2	UEP9E	UECS1	16.31										
	2-Wire Voice Grade Loop (SL 1) - Zone 3		3	UEP9E	UECS1	21.32										
	2-Wire Voice Grade Loop (SL 2) - Zone 1		1	UEP9E	UECS2	16.56										
	2-Wire Voice Grade Loop (SL 2) - Zone 2		2	UEP9E	UECS2	21.63										
	2-Wire Voice Grade Loop (SL 2) - Zone 3		3	UEP9E	UECS2	28.28										
UNE Port Rate																
AL, FL, KY, LA, MS, & TN only																
	2-Wire Voice Grade Port (Centrex) Basic Local Area			UEP9E	UEPYA	1.70	22.14	15.25	8.45	3.91		30.89	7.03			
	2-Wire Voice Grade Port (Centrex 800 termination)Basic Local Area			UEP9E	UEPYB	1.70	22.14	15.25	8.45	3.91		30.89	7.03			
	2-Wire Voice Grade Port (Centrex with Caller ID)1Basic Local Area			UEP9E	UEPYH	1.70	22.14	15.25	8.45	3.91		30.89	7.03			
	2-Wire Voice Grade Port (Centrex from diff Serving Wire Center)2,3 Basic Local Area			UEP9E	UEPYM	1.70	22.14	15.25	8.45	3.91		30.89	7.03			
	2-Wire Voice Grade Port, Diff Serving Wire Center 2,3 - 800 Service Term - Basic Local Area			UEP9E	UEPYZ	1.70	22.14	15.25	8.45	3.91		30.89	7.03			
	2-Wire Voice Grade Port terminated in on Megalink or equivalent - Basic Local Area			UEP9E	UEPY9	1.70	22.14	15.25	8.45	3.91		30.89	7.03			
	2-Wire Voice Grade Port Terminated on 800 Service Term - Basic Local Area			UEP9E	UEPY2	1.70	22.14	15.25	8.45	3.91		30.89	7.03			
AL, KY, LA, MS, & TN Only																
	2-Wire Voice Grade Port (Centrex)			UEP9E	UEPQA	1.70	22.14	15.25	8.45	3.91		30.89	7.03			
	2-Wire Voice Grade Port (Centrex 800 termination)			UEP9E	UEPQB	1.70	22.14	15.25	8.45	3.91		30.89	7.03			
	2-Wire Voice Grade Port (Centrex with Caller ID)1			UEP9E	UEPQH	1.70	22.14	15.25	8.45	3.91		30.89	7.03			
	2-Wire Voice Grade Port (Centrex from diff Serving Wire Center)2,3			UEP9E	UEPQM	1.70	22.14	15.25	8.45	3.91		30.89	7.03			
	2-Wire Voice Grade Port, Diff Serving Wire Center 2,3 - 800 Service Term			UEP9E	UEPQZ	1.70	22.14	15.25	8.45	3.91		30.89	7.03			
	2-Wire Voice Grade Port terminated in on Megalink or equivalent			UEP9E	UEPQ9	1.70	22.14	15.25	8.45	3.91		30.89	7.03			
	2-Wire Voice Grade Port Terminated on 800 Service Term			UEP9E	UEPQ2	1.70	22.14	15.25	8.45	3.91		30.89	7.03			
Local Switching																
	Centrex Intercom Funtionality, per port			UEP9E	URECS	0.6381										

UNBUNDLED NETWORK ELEMENTS - Tennessee														Attachment: 2		Exhibit: A	
CATEGORY	RATE ELEMENTS	Interim	Zone	BCS	USOC	RATES ($)					Svc Order Submitted Elec per LSR	Svc Order Submitted Manually per LSR	Incremental Charge - Manual Svc Order vs. Electronic-1st	Incremental Charge - Manual Svc Order vs. Electronic-Add'l	Incremental Charge - Manual Svc Order vs. Electronic-Disc 1st	Incremental Charge - Manual Svc Order vs. Electronic-Disc Add'l
						Rec	Nonrecurring		Nonrecurring Disconnect		OSS Rates ($)					
							First	Add'l	First	Add'l	SOMEC	SOMAN	SOMAN	SOMAN	SOMAN	SOMAN
Local Number Portability																
	Local Number Portability (1 per port)			UEP9E	LNPCC	0.35										
Features																
	All Standard Features Offered, per port			UEP9E	UEPVF	0.00						30.89	7.03			
	All Select Features Offered, per port			UEP9E	UEPVS	0.00	433.78					30.89	7.03			
	All Centrex Control Features Offered, per port			UEP9E	UEPVC	0.00						30.89	7.03			
NARS																
	Unbundled Network Access Register - Combination			UEP9E	UARCX	0.00	0.00	0.00	0.00	0.00		0.00	7.03			
	Unbundled Network Access Register - Indial			UEP9E	UAR1X	0.00	0.00	0.00	0.00	0.00		0.00	7.03			
	Unbundled Network Access Register - Outdial			UEP9E	UAROX	0.00	0.00	0.00	0.00	0.00		0.00	7.03			
Miscellaneous Terminations																
2-Wire Trunk Side																
	Trunk Side Terminations, each			UEP9E	CEND6	8.78	22.14	15.25	8.45	3.91		30.89	7.03			
4-Wire Digital (1.544 Megabits)																
	DS1 Circuit Terminations, each			UEP9E	M1HD1	35.55	75.93	38.15				30.89	7.03			
	DS0 Channel Activated Per Channel			UEP9E	M1HDO	0.00	108.67					30.89	7.03			
Interoffice Channel Mileage - 2-Wire																
	Interoffice Channel Facilities Termination			UEP9E	M1GBC	18.58	22.14	15.25	8.45	3.91		30.89	7.03			
	Interoffice Channel mileage, per mile or fraction of mile			UEP9E	M1GBM	0.0174										
Feature Activations (DS0) Centrex Loops on Channelized DS1 Service																
D4 Channel Bank Feature Activations																
	Feature Activation on D-4 Channel Bank Centrex Loop Slot			UEP9E	1PQWS	0.66										
	Feature Activation on D-4 Channel Bank FX line Side Loop Slot			UEP9E	1PQW6	0.66										
	Feature Activation on D-4 Channel Bank FX Trunk Side Loop Slot			UEP9E	1PQW7	0.66										
	Feature Activation on D-4 Channel Bank Centrex Loop Slot - Different Wire Center			UEP9E	1PQWP	0.66										
	Feature Activation on D-4 Channel Bank Private Line Loop Slot			UEP9E	1PQWV	0.66										
	Feature Activation on D-4 Channel Bank Tjie Line/Trunk Loop Slot			UEP9E	1PQWQ	0.66										
	Feature Activation on D-4 Channel Bank WATS Loop Slot			UEP9E	1PQWA	0.66										
Non-Recurring Charges (NRC) Associated with UNE-P Centrex																
	NRC Conversion Currently Combined Switch-As-Is with allowed changes, per port			UEP9E	USAC2		1.03	0.29				30.89	7.03			
	New Centrex Standard Common Block			UEP9E	M1ACS	0.00	658.60					30.89	7.03			
	New Centrex Customized Common Block			UEP9E	M1ACC	0.00	658.60					30.89	7.03			
	NAR Establishment Charge, Per Occasion			UEP9E	URECA	0.00	68.57					30.89	7.03			
Additional Non-Recurring Charges (NRC)																
	Unbundled Miscellaneous Rate Element, Tag Loop at End Use Premise			UEP9E	URETL		8.33	0.83								
	Unbundled Miscellaneous Rate Element, Tag Design Loop at End Use Premise			UEP9E	URETN		11.23	1.10								
UNE-P CENTREX - DCO - Valid in AL, KY, LA, MS, & TN)																
2-Wire VG Loop/2-Wire Voice Grade Port (Centrex) Combo																
UNE Port/Loop Combination Rates (Non-Design)																
	2-Wire VG Loop/2-Wire Voice Grade Port (Centrex) Port Combo - Non-Design		1	UEP93		14.18										
	2-Wire VG Loop/2-Wire Voice Grade Port (Centrex)Port Combo - Non-Design		2	UEP93		18.01										
	2-Wire VG Loop/2-Wire Voice Grade Port (Centrex)Port Combo - Non-Design		3	UEP93		23.02										
UNE Port/Loop Combination Rates (Design)																
	2-Wire VG Loop/2-Wire Voice Grade Port (Centrex) Port Combo - Design		1	UEP93		18.26										
	2-Wire VG Loop/2-Wire Voice Grade Port (Centrex)Port Combo - Design		2	UEP93		23.33										

UNBUNDLED NETWORK ELEMENTS - Tennessee														Attachment: 2		Exhibit: A	
CATEGORY		RATE ELEMENTS	Interim	Zone	BCS	USOC	RATES ($)					Svc Order Submitted Elec per LSR	Svc Order Submitted Manually per LSR	Incremental Charge - Manual Svc Order vs. Electronic-1st	Incremental Charge - Manual Svc Order vs. Electronic-Add'l	Incremental Charge - Manual Svc Order vs. Electronic-Disc 1st	Incremental Charge - Manual Svc Order vs. Electronic-Disc Add'l
							Rec	Nonrecurring		Nonrecurring Disconnect		OSS Rates ($)					
								First	Add'l	First	Add'l	SOMEC	SOMAN	SOMAN	SOMAN	SOMAN	SOMAN
		2-Wire VG Loop/2-Wire Voice Grade Port (Centrex)Port Combo - Design		3	UEP93		29.98										
	UNE Loop Rate																
		2-Wire Voice Grade Loop (SL 1) - Zone 1		1	UEP93	UECS1	12.48										
		2-Wire Voice Grade Loop (SL 1) - Zone 2		2	UEP93	UECS1	16.31										
		2-Wire Voice Grade Loop (SL 1) - Zone 3		3	UEP93	UECS1	21.32										
		2-Wire Voice Grade Loop (SL 2) - Zone 1		1	UEP93	UECS2	16.56										
		2-Wire Voice Grade Loop (SL 2) - Zone 2		2	UEP93	UECS2	21.63										
		2-Wire Voice Grade Loop (SL 2) - Zone 3		3	UEP93	UECS2	28.28										
	UNE Port Rate																
	AL, KY, LA, MS, & TN only																
		2-Wire Voice Grade Port (Centrex) Basic Local Area			UEP93	UEPYA	1.70	22.14	15.25	8.45	3.91		30.89	7.03			
		2-Wire Voice Grade Port (Centrex 800 termination)Basic Local Area			UEP93	UEPYB	1.70	22.14	15.25	8.45	3.91		30.89	7.03			
		2-Wire Voice Grade Port (Centrex with Caller ID)1Basic Local Area			UEP93	UEPYH	1.70	22.14	15.25	8.45	3.91		30.89	7.03			
		2-Wire Voice Grade Port (Centrex from diff Serving Wire Center)2,3 Basic Local Area			UEP93	UEPYM	1.70	22.14	15.25	8.45	3.91		30.89	7.03			
		2-Wire Voice Grade Port, Diff Serving Wire Center - 2,3 - 800 Service Term - Basic Local Area			UEP93	UEPYZ	1.70	22.14	15.25	8.45	3.91		30.89	7.03			
		2-Wire Voice Grade Port terminated in on Megalink or equivalent - Basic Local Area			UEP93	UEPY9	1.70	22.14	15.25	8.45	3.91		30.89	7.03			
		2-Wire Voice Grade Port Terminated on 800 Service Term - Basic Local Area			UEP93	UEPY2	1.70	22.14	15.25	8.45	3.91		30.89	7.03			
		2-Wire Voice Grade Port (Centrex)			UEP93	UEPQA	1.70	22.14	15.25	8.45	3.91		30.89	7.03			
		2-Wire Voice Grade Port (Centrex 800 termination)			UEP93	UEPQB	1.70	22.14	15.25	8.45	3.91		30.89	7.03			
		2-Wire Voice Grade Port (Centrex with Caller ID)1			UEP93	UEPQH	1.70	22.14	15.25	8.45	3.91		30.89	7.03			
		2-Wire Voice Grade Port (Centrex from diff Serving Wire Center)2,3			UEP93	UEPQM	1.70	22.14	15.25	8.45	3.91		30.89	7.03			
		2-Wire Voice Grade Port, Diff Serving Wire Center - 2,3 -800 Service Term			UEP93	UEPQZ	1.70	22.14	15.25	8.45	3.91		30.89	7.03			
		2-Wire Voice Grade Port terminated in on Megalink or equivalent			UEP93	UEPQ9	1.70	22.14	15.25	8.45	3.91		30.89	7.03			
		2-Wire Voice Grade Port Terminated on 800 Service Term			UEP93	UEPQ2	1.70	22.14	15.25	8.45	3.91		30.89	7.03			
	Local Switching																
		Centrex Intercom Funtionality, per port			UEP93	URECS	0.6381										
	Local Number Portability																
		Local Number Portability (1 per port)			UEP93	LNPCC	0.35										
	Features																
		All Standard Features Offered, per port			UEP93	UEPVF	0.00										
		All Centrex Control Features Offered, per port			UEP93	UEPVC	0.00										
	NARS																
		Unbundled Network Access Register - Combination			UEP93	UARCX	0.00	0.00	0.00	0.00	0.00		0.00	7.03			
		Unbundled Network Access Register - Indial			UEP93	UAR1X	0.00	0.00	0.00	0.00	0.00		0.00	7.03			
		Unbundled Network Access Register - Outdial			UEP93	UAROX	0.00	0.00	0.00	0.00	0.00		0.00	7.03			
	Miscellaneous Terminations																
	2-Wire Trunk Side																
		Trunk Side Terminations, each			UEP93	CEND6	8.78	22.14	15.25	8.45	3.91		30.89	7.03			
	4-Wire Digital (1.544 Megabits)																
		DS1 Circuit Terminations, each			UEP93	M1HD1	35.55	75.93	38.15				30.89	7.03			
		DS0 Channels Activated, Per Channel			UEP93	M1HDO	0.00	108.67					30.89	7.03			
	Interoffice Channel Mileage - 2-Wire																
		Interoffice Channel Facilities Termination			UEP93	M1GBC	18.58	22.14	15.25	8.45	3.91		30.89	7.03			
		Interoffice Channel mileage, per mile or fraction of mile			UEP93	M1GBM	0.0174										
	Feature Activations (DS0) Centrex Loops on Channelized DS1 Service																
	D4 Channel Bank Feature Activations																
		Feature Activation on D-4 Channel Bank Centrex Loop Slot			UEP93	1PQWS	0.66										
		Feature Activation on D-4 Channel Bank FX Line Side Loop Slot			UEP93	1PQW6	0.66										

UNBUNDLED NETWORK ELEMENTS - Tennessee														Attachment: 2		Exhibit: A	
CATEGORY		RATE ELEMENTS	Interim	Zone	BCS	USOC	RATES ($)					Svc Order Submitted Elec per LSR	Svc Order Submitted Manually per LSR	Incremental Charge - Manual Svc Order vs. Electronic-1st	Incremental Charge - Manual Svc Order vs. Electronic-Add'l	Incremental Charge - Manual Svc Order vs. Electronic-Disc 1st	Incremental Charge - Manual Svc Order vs. Electronic-Disc Add'l
							Rec	Nonrecurring		Nonrecurring Disconnect		OSS Rates ($)					
								First	Add'l	First	Add'l	SOMEC	SOMAN	SOMAN	SOMAN	SOMAN	SOMAN
		Feature Activation on D-4 Channel Bank FX Trunk Side Loop Slot			UEP93	1PQW7	0.66										
		Feature Activation on D-4 Channel Bank Centrex Loop Slot - Different Wire Center			UEP93	1PQWP	0.66										
		Feature Activation on D-4 Channel Bank Private Line Loop Slot			UEP93	1PQWV	0.66										
		Feature Activation on D-4 Channel Bank Tie Line/Trunk Loop Slot			UEP93	1PQWQ	0.66										
		Feature Activation on D-4 Channel Bank WATS Loop Slot			UEP93	1PQWA	0.66										
	Non-Recurring Charges (NRC) Associated with UNE-P Centrex																
		NRC Conversion Currently Combined Switch-As-Is with allowed changes, per port			UEP93	USAC2		1.03	0.29				30.89	7.03			
		New Centrex Standard Common Block			UEP93	M1ACS	0.00	658.60					30.89	7.03			
		New Centrex Customized Common Block			UEP93	M1ACC	0.00	658.60					30.89	7.03			
		NAR Establishment Charge, Per Occasion			UEP93	URECA		68.57					30.89	7.03			
	Additional Non-Recurring Charges (NRC)																
		Unbundled Miscellaneous Rate Element, Tag Loop at End Use Premise			UEP93	URETL		8.33	0.83								
		Unbundled Miscellaneous Rate Element, Tag Design Loop at End Use Premise			UEP93	URETN		11.23	1.10								
	Note 1 - Required Port for Centrex Control in 1AESS, 5ESS & EWSD																
	Note 2 - Requres Interoffice Channel Mileage																
	Note 3 - Installation is combination of Installation charge for SL2 Loop and Port																
	Note 4 - Requires Specific Customer Premises Equipment																
	Note: Rates displaying an "R" in Interim column are interim and subject to rate true-up as set forth in General Terms and Conditions.																

Attachment 6

Pre-Ordering, Ordering, Provisioning, Maintenance and Repair

TABLE OF CONTENTS

1. QUALITY OF PRE-ORDERING, ORDERING, PROVISIONING, MAINTENANCE AND REPAIR ... 3

2. ACCESS TO OPERATIONS SUPPORT SYSTEMS ... 3

3. MISCELLANEOUS ... 5

PRE-ORDERING, ORDERING, PROVISIONING, MAINTENANCE AND REPAIR

1. QUALITY OF PRE-ORDERING, ORDERING, PROVISIONING, MAINTENANCE AND REPAIR

1.1 BellSouth shall provide to DPI Teleconnect nondiscriminatory access to its Operations Support Systems (OSS) and the necessary information contained therein in order that DPI Teleconnect can perform the functions of pre-ordering, ordering, provisioning, maintenance and repair, and billing.. BellSouth shall provide DPI Teleconnect with all relevant documentation (manuals, user guides, specifications, etc.) regarding business rules and other formatting information as well as practices and procedures necessary to ensure requests are efficiently processed. All documentation will be readily accessible at BellSouth's interconnection website and are incorporated herein by reference. BellSouth shall ensure that its OSS are designed to accommodate access requests for both current and projected demand of DPI Teleconnect and other CLECs in the aggregate.

1.2 BellSouth shall provision services during its regular working hours. To the extent DPI Teleconnect requests provisioning of service to be performed outside BellSouth's regular working hours, or the work so requested requires BellSouth's technicians or project manager to work outside of regular working hours, overtime charges shall apply. Notwithstanding the foregoing, if such work is performed outside of regular working hours by a BellSouth technician or project manager during his or her scheduled shift and BellSouth does not incur any overtime charges in performing the work on behalf of DPI Teleconnect, BellSouth will not assess DPI Teleconnect additional charges beyond the rates and charges specified in this Agreement.

2. ACCESS TO OPERATIONS SUPPORT SYSTEMS

2.1 BellSouth shall provide DPI Teleconnect nondiscriminatory access to its OSS and the necessary information contained therein in order that DPI Teleconnect can perform the functions of pre-ordering, ordering, provisioning, maintenance and repair, and billing. BellSouth shall provide nondiscriminatory access to the OSS through manual and/or electronic interfaces as described in this Attachment. It is the sole responsibility of DPI Teleconnect to obtain the technical capability to access and utilize BellSouth's OSS interfaces. Specifications for DPI Teleconnect's access and use of BellSouth's electronic interfaces are set forth at BellSouth's interconnection website and are incorporated herein by reference.

2.1.1 <u>Pre-Ordering</u>. BellSouth will provide electronic access to its OSS and the information contained therein in order that DPI Teleconnect can perform the following pre-ordering functions: service address validation, telephone number selection, service and feature availability, due date information, customer record

information and loop makeup information. Mechanized access is provided by electronic interfaces whose specifications for access and use are set forth at BellSouth's interconnection website and are incorporated herein by reference. The process by which BellSouth and DPI Teleconnect will manage these electronic interfaces to include the development and introduction of new interfaces will be governed by the change management process as described below. DPI Teleconnect shall provide to BellSouth access to customer record information, including circuit numbers associated with each telephone number where applicable. DPI Teleconnect shall provide such information within four (4) hours after request via electronic access where available. If electronic access is not available, DPI Teleconnect shall provide to BellSouth paper copies of customer record information, including circuit numbers associated with each telephone number where applicable. If BellSouth requests the information before noon, the customer record information shall be provided the same day. If BellSouth requests the information after noon, the customer record information shall be provided by noon the following day.

2.1.2 The Parties agree not to view, copy, or otherwise obtain access to the customer record information of any customer without that customer's permission. DPI Teleconnect will obtain access to customer record information only in strict compliance with applicable laws, rules, or regulations of the state in which the service is provided. BellSouth reserves the right to audit DPI Teleconnect's access to customer record information. If a BellSouth audit of DPI Teleconnect's access to customer record information reveals that DPI Teleconnect is accessing customer record information without having obtained the proper End User authorization, BellSouth upon reasonable notice to DPI Teleconnect may take corrective action, including but not limited to suspending or terminating DPI Teleconnect's electronic access to BellSouth's OSS functionality. All such information obtained through an audit shall be deemed Information covered by the Proprietary and Confidential Information section in the General Terms and Conditions of this Agreement.

2.1.3 Ordering. BellSouth will make available to DPI Teleconnect electronic interfaces for the purpose of exchanging order information, including order status and completion notification, for non-complex and certain complex resale requests and certain network elements. Specifications for access and use of BellSouth's electronic interfaces are set forth at BellSouth's interconnection website and are incorporated herein by reference. The process by which BellSouth and DPI Teleconnect will manage these electronic interfaces to include the development and introduction of new interfaces will be governed by the change management process as described below.

2.1.4 Maintenance and Repair. BellSouth will make available to DPI Teleconnect electronic interfaces for the purpose of reporting and monitoring service troubles. Specifications for access and use of BellSouth's maintenance and repair electronic interfaces are set forth at BellSouth's interconnection website and are incorporated herein by reference. The process by which BellSouth and DPI Teleconnect will

manage these electronic interfaces to include the development and introduction of new interfaces will be governed by the change management process as described below. Requests for trouble repair are billed in accordance with the provisions of this Agreement. BellSouth and DPI Teleconnect agree to adhere to BellSouth's Operational Understanding, as amended from time to time during this Agreement and as incorporated herein by reference. The Operational Understanding may be accessed via BellSouth's interconnection website.

2.1.5 Billing. BellSouth will provide DPI Teleconnect nondiscriminatory access to billing information as specified in Attachment 7 to this Agreement.

2.2 Change Management. BellSouth and DPI Teleconnect agree that the collaborative change management process known as the Change Control Process (CCP) will be used to manage changes to existing interfaces, introduction of new interfaces and retirement of interfaces. BellSouth and DPI Teleconnect agree to comply with the provisions of the documented Change Control Process as may be amended from time to time and incorporated herein by reference. The change management process will cover changes to BellSouth's electronic interfaces, BellSouth's testing environment, associated manual process improvements, and relevant documentation. The process will define a procedure for resolution of change management disputes. Documentation of the CCP as well as related information and processes will be clearly organized and readily accessible to DPI Teleconnect at BellSouth's interconnection website.

2.3 Rates. Charges for use of OSS shall be as set forth in this Agreement.

3. MISCELLANEOUS

3.1 Pending Orders. Orders placed in the hold or pending status by DPI Teleconnect will be held for a maximum of thirty (30) calendar days from the date the order is placed on hold. After such time, DPI Teleconnect shall be required to submit a new service request. Incorrect or invalid requests returned to DPI Teleconnect for correction or clarification will be held for thirty (30) calendar days. If DPI Teleconnect does not return a corrected request within thirty (30) calendar days, BellSouth will cancel the request.

3.2 Single Point of Contact. DPI Teleconnect will be the single point of contact with BellSouth for ordering activity for network elements and other services used by DPI Teleconnect to provide services to its End Users, except that BellSouth may accept a request directly from another CLEC, or BellSouth, acting with authorization of the affected End User. DPI Teleconnect and BellSouth shall each execute a blanket letter of authorization with respect to customer requests so that prior proof of End User authorization will not be necessary with every request (except in the case of a local service freeze). The Parties shall each be entitled to adopt their own internal processes for verification of customer authorization for requests, provided, however, that such processes shall comply with applicable state and federal law and industry and regulatory guidelines. Pursuant to a request from

another carrier, BellSouth may disconnect any network element being used by DPI Teleconnect to provide service to that End User and may reuse such network elements or facilities to enable such other carrier to provide service to the End User. BellSouth will notify DPI Teleconnect that such a request has been processed but will not be required to notify DPI Teleconnect in advance of such processing.

3.2.1 Neither BellSouth nor DPI Teleconnect shall prevent or delay an End User from migrating to another carrier because of unpaid bills, denied service, or contract terms.

3.2.2 BellSouth shall return a Firm Order Confirmation (FOC) and Local Service Request (LSR) rejection/clarification within the intervals in accordance with the Service Quality Measurement (SQM) set forth in Attachment 9 of this Agreement.

3.2.3 DPI Teleconnect shall return a FOC to BellSouth within thirty-six (36) hours after DPI Teleconnect's receipt from BellSouth of a valid LSR.

3.2.4 DPI Teleconnect shall provide a Reject Response to BellSouth within twenty-four (24) hours after BellSouth's submission of an LSR which is incomplete or incorrectly formatted.

3.3 Use of Facilities. When a customer of DPI Teleconnect elects to discontinue service and to transfer service to another local exchange carrier, including BellSouth, BellSouth shall have the right to reuse the facilities provided to DPI Teleconnect by BellSouth. In addition, where BellSouth provides local switching, BellSouth may disconnect and reuse facilities when the facility is in a denied state and BellSouth has received a request to establish new service or transfer of service from a customer or a customer's CLEC at the same address served by the denied facility. BellSouth will notify DPI Teleconnect that such a request has been processed after the disconnect order has been completed.

3.4 Contact Numbers. The Parties agree to provide one another with toll-free nation-wide (50 states) contact numbers for the purpose of ordering, provisioning and maintenance of services.

3.5 Subscription Functions. In cases where BellSouth performs subscription functions for an interexchange carrier (IXC) (i.e. PIC and LPIC changes via Customer Account Record Exchange (CARE)), BellSouth will in all possible instances provide the affected IXCs with the Operating Company Number (OCN) of the local provider for the purpose of obtaining End User billing account and other End User information required under subscription requirements.

3.5.1 When DPI Teleconnect's End User, served by resale or loop and port combinations, changes its PIC or LPIC, and per BellSouth's FCC or state tariff the interexchange carrier elects to charge the End User the PIC or LPIC change charge, BellSouth will bill the PIC or LPIC change charge to DPI Teleconnect,

which has the billing relationship with that End User, and DPI Teleconnect may pass such charge to the End User.

3.6 Cancellation Charges. If DPI Teleconnect cancels a request for network elements or resold services, any costs incurred by BellSouth in conjunction with the provisioning of that request will be recovered in accordance with BellSouth's Private Line Tariff or BellSouth's FCC No. 1 Tariff, Section 5.4, as applicable. Notwithstanding the foregoing, if DPI Teleconnect places an LSR based upon BellSouth's loop makeup information, and such information is inaccurate resulting in the inability of BellSouth to provision the network elements requested and another spare compatible facility cannot be found with the transmission characteristics of the network elements originally requested, cancellation charges described in this Section shall not apply. Where DPI Teleconnect places a single LSR for multiple network elements or services based upon loop makeup information, and information as to some, but not all, of the network elements or services is inaccurate, if BellSouth cannot provision the network elements or services that were the subject of the inaccurate loop makeup information, DPI Teleconnect may cancel its request for those network elements or services without incurring cancellation charges as described in this Section. In such instance, should DPI Teleconnect elect to cancel the entire LSR, cancellation charges as described in this Section shall apply to those elements and services that were not the subject of inaccurate loop makeup.

3.7 Service Date Advancement Charges (a.k.a. Expedites). For Service Date Advancement requests by DPI Teleconnect, Service Date Advancement charges will apply for intervals less than the standard interval as outlined in the BellSouth Product and Services Interval Guide. The charges as outlined in BellSouth's FCC No. 1 Tariff, Section 5, will apply as applicable.

Amendment
To the
Interconnection Agreement
Between
DPI-Teleconnect, LLC
and
BellSouth Telecommunications, Inc.
Dated April 19, 2003

Pursuant to this Amendment, (the "Amendment"), DPI-Teleconnect, LLC (DPI-Teleconnect), and BellSouth Telecommunications, Inc. ("BellSouth"), hereinafter referred to collectively as the "Parties," hereby agree to amend that certain Interconnection Agreement between the Parties dated April 19, 2003 ("Agreement") to be effective the date of the last signature executing this Amendment.

WHEREAS, BellSouth and DPI-Teleconnect entered into the Agreement on April 19, 2003, and;

WHEREAS, BellSouth and DPI-Teleconnect are amending the Agreement to modify Local Number Portability (LNP) recovery charge pursuant to the Order in the matter of the Telephone Number Portability BellSouth Corporation Petition for Declaratory Ruling and/or Waiver, CC Docket No. 95-116, released April 13, 2004;

NOW, THEREFORE, in consideration of the mutual provisions contained herein and other good and valuable consideration, the receipt and sufficiency of which are hereby acknowledged, the Parties hereby covenant and agree as follows:

1. The Parties agree to delete in their entirety all rate elements and USOCs identified as "Local Number Portability charges" in Exhibit A of Attachment 2, as specified by the following USOCs: LNPCX, LNPCP, LNPCN, and LNPCC.

2. The Parties agree to add the following language to Section 4 as Section 4.1.1 of Attachment 2 and Section 5 as Section 5.4.5 of Attachment 2:

    - In addition to other charges specified in this Agreement for Local Number Portability DPI-Teleconnect shall pay to BellSouth the Local Number Portability charges as set forth in Section 13 of the BellSouth FCC No. 1 Tariff;

3. All of the other provisions of the Agreement dated April 19, 2003 shall remain unchanged and in full force and effect.

4. Either or both of the Parties are authorized to submit this Amendment to the respective state regulatory authorities for approval subject to Section 252(e) of the Federal Telecommunications Act of 1996.

IN WITNESS WHEREOF, the Parties have executed this Agreement the day and year written below.

BellSouth Telecommunications, Inc.	**DPI-Teleconnect, LLC**
By:	By:
Name: Kristen E. Rowe	Name:
Title: Director	Title: President & CEO
Date: 9/3/04	Date: 7/31/04

Amendment to the Agreement
Between
DPI-Teleconnect, LLC
and
BellSouth Telecommunications, Inc.
Dated March 19, 2003

Pursuant to this Amendment, (the "Amendment"), DPI-Teleconnect, LLC ("DPI-Teleconnect"), and BellSouth Telecommunications, Inc. ("BellSouth"), hereinafter referred to collectively as the "Parties," hereby agree to amend that certain Interconnection Agreement between the Parties dated March 19, 2003 ("Agreement") to be effective January 1, 2005 ("Effective Date").

WHEREAS, the Parties desire to amend the Agreement in order to modify Attachment 2 to delete all switching requirements and to provide for limited line splitting and line sharing obligations on behalf of BellSouth;

NOW, THEREFORE, in consideration of the mutual provisions contained herein and other good and valuable consideration, the receipt and sufficiency of which are hereby acknowledged, the Parties hereby covenant and agree as follows:

1. The rates, terms and conditions for section 3.7 through 3.10.3 of Attachment 2 of this Agreement shall be deleted and replaced with the following language:

3.7 Line Splitting

3.7.1 Line Splitting. Line Splitting shall mean that a provider of data services (a Data LEC) and a provider of voice services (a Voice CLEC) deliver voice and data service to End Users over the same Loop. The Voice CLEC and Data LEC may be the same or different carriers.

3.7.2 DPI-Teleconnect may engage in line splitting arrangements with another CLEC using a splitter, provided by DPI-Teleconnect or a third party, in a Collocation Space at the central office, where the Loop terminates into a distribution frame or its equivalent.

3.7.3 Maintenance – Line Splitting. BellSouth will be responsible for repairing troubles with the physical Loop between the NID at the End User's premises and the termination point.

3.7.4 DPI-Teleconnect shall indemnify, defend and hold harmless BellSouth from and against any claims, losses, actions, causes of action, suits, demands, damages, injury,

and costs including reasonable attorney fees, which arise out of actions related to the other service provider, except to the extent caused by BellSouth's gross negligence or willful misconduct.

2. The following sections from Attachment 2 of this Agreement are hereby deleted: section 4 in its entirety; sections 5.3 – 5.3.5; sections 7, 8, and 9 in their entirety; sections 10 – 10.5.3.3; and sections 12 and 13 in their entirety.
3. Delete Exhibit A of Attachment 2 in its entirety and replace with Exhibit 1 attached hereto.
4. The following sections from Attachment 7 of this Agreement are hereby deleted: section 3, section 4, section 5, and section 6 in their entirety.
5. Delete Exhibit A of Attachment 7 in its entirety.
6. Notwithstanding any reference to switching in this Agreement, BellSouth shall not be obligated to provide switching pursuant to this Agreement.
7. All of the other provisions of the Agreement, dated March 19, 2003, shall remain in full force and effect.
8. Either or both of the Parties are authorized to submit this Amendment to the respective state regulatory authorities for approval subject to Section 252(e) of the Federal Telecommunications Act of 1996.

Signature Page

IN WITNESS WHEREOF, the Parties have executed this Amendment the day and year written below.

BellSouth Telecommunications, Inc.

By: Kristen Rowe

Name: Kristen Rowe

Title: Director

Date: 3/10/05

DPI-Teleconnect, LLC

By: David B. Dorman

Name: DAVID B. DORMAN

Title: President & CEO

Date: 3/10/05

Version: Generic Amendment Template
XX/XX/XX

UNBUNDLED NETWORK ELEMENTS - Alabama														Attachment: 2		Exhibit: A	
CATEGORY		RATE ELEMENTS	Interim	Zone	BCS	USOC	RATES ($)					Svc Order Submitted Elec per LSR	Svc Order Submitted Manually per LSR	Incremental Charge - Manual Svc Order vs. Electronic-1st	Incremental Charge - Manual Svc Order vs. Electronic-Add'l	Incremental Charge - Manual Svc Order vs. Electronic-Disc 1st	Incremental Charge - Manual Svc Order vs. Electronic-Disc Add'l
							Rec	Nonrecurring		Nonrecurring Disconnect		OSS Rates ($)					
								First	Add'l	First	Add'l	SOMEC	SOMAN	SOMAN	SOMAN	SOMAN	SOMAN
	The "Zone" shown in the sections for stand-alone loops or loops as part of a combination refers to Geographically Deaveraged UNE Zones. To view Geographically Deaveraged UNE Zone Designations by Central Office, refer to internet Website: http://www.interconnection.bellsouth.com/become_a_clec/html/interconnection.htm																
OPERATIONAL SUPPORT SYSTEMS (OSS) - "REGIONAL RATES"																	
	NOTE: (1) CLEC should contact its contract negotiator if it prefers the "state specific" OSS charges as ordered by the State Commissions. The OSS charges currently contained in this rate exhibit are the BellSouth "regional" service ordering charges. CLEC may elect either the state specific Commission ordered rates for the service ordering charges, or CLEC may elect the regional service ordering charge, however, CLEC can not obtain a mixture of the two regardless if CLEC has a interconnection contract established in each of the 9 states.																
	NOTE: (2) Any element that can be ordered electronically will be billed according to the SOMEC rate listed in this category. Please refer to BellSouth's Local Ordering Handbook (LOH) to determine if a product can be ordered electronically. For those elements that cannot be ordered electronically at present per the LOH, the listed SOMEC rate in this category reflects the charge that would be billed to a CLEC once electronic ordering capabilities come on-line for that element. Otherwise, the manual ordering charge, SOMAN, will be applied to a CLECs bill when it submits an LSR to BellSouth.																
		OSS - Electronic Service Order Charge, Per Local Service Request (LSR) - UNE Only				SOMEC		3.50	0.00	3.50	0.00						
		OSS - Manual Service Order Charge, Per Local Service Request (LSR) - UNE Only				SOMAN		15.66	0.00	1.97	0.00						
UNE SERVICE DATE ADVANCEMENT CHARGE																	
	NOTE: The Expedite charge will be maintained commensurate with BellSouth's FCC No.1 Tariff, Section 5 as applicable.																
		UNE Expedite Charge per Circuit or Line Assignable USOC, per Day			UAL, UEANL, UCL, UEF, UDF, UEQ, UDL, UENTW, UDN, UEA, UHL, ULC, USL, U1T12, U1T48, U1TD1, U1TD3, U1TDX, U1TO3, U1TS1, U1TVX, UC1BC, UC1BL, UC1CC, UC1CL, UC1DC, UC1DL, UC1EC, UC1EL, UC1FC, UC1FL, UC1GC, UC1GL, UC1HC, UC1HL, UDL12, UDL48, UDLO3, UDLSX, UE3, ULD12, ULD48, ULDD1, ULDD3, ULDDX, ULDO3, ULDS1, ULDVX, UNC1X, UNC3X, UNCDX, UNCNX, UNCSX, UNCVX, UNLD1, UNLD3, UXTD1, UXTD3, UXTS1, U1TUC, U1TUD, U1TUB, U1TUA	SDASP		200.00									
UNBUNDLED EXCHANGE ACCESS LOOP																	
	2-WIRE ANALOG VOICE GRADE LOOP																
		2-Wire Analog Voice Grade Loop - Service Level 1- Zone 1		1	UEANL	UEAL2	12.58	37.81	17.56	23.49	5.30						
		2-Wire Analog Voice Grade Loop - Service Level 1- Zone 2		2	UEANL	UEAL2	21.05	37.81	17.56	23.49	5.30						
		2-Wire Analog Voice Grade Loop - Service Level 1- Zone 3		3	UEANL	UEAL2	34.34	37.81	17.56	23.49	5.30						
		2-Wire Analog Voice Grade Loop - Service Level 1- Zone 1		1	UEANL	UEASL	12.58	37.81	17.56	23.49	5.30						
		2-Wire Analog Voice Grade Loop - Service Level 1- Zone 2		2	UEANL	UEASL	21.05	37.81	17.56	23.49	5.30						
		2-Wire Analog Voice Grade Loop - Service Level 1- Zone 3		3	UEANL	UEASL	34.34	37.81	17.56	23.49	5.30						
		Unbundled Miscellaneous Rate Element, Tag Loop at End User Premise			UEANL	URETL		8.33	0.83								
		Loop Testing - Basic 1st Half Hour			UEANL	URET1		34.16	34.16								
		Loop Testing - Basic Additional Half Hour			UEANL	URETA		19.85	19.85								

UNBUNDLED NETWORK ELEMENTS - Alabama													Attachment: 2		Exhibit: A	
CATEGORY	RATE ELEMENTS	Interim	Zone	BCS	USOC	RATES ($)					Svc Order Submitted Elec per LSR	Svc Order Submitted Manually per LSR	Incremental Charge - Manual Svc Order vs. Electronic-1st	Incremental Charge - Manual Svc Order vs. Electronic-Add'l	Incremental Charge - Manual Svc Order vs. Electronic-Disc 1st	Incremental Charge - Manual Svc Order vs. Electronic-Disc Add'l
						Rec	Nonrecurring		Nonrecurring Disconnect		OSS Rates ($)					
							First	Add'l	First	Add'l	SOMEC	SOMAN	SOMAN	SOMAN	SOMAN	SOMAN
	CLEC to CLEC Conversion Charge Without Outside Dispatch (UVL-SL1)			UEANL	UREWO		15.78	8.94								
	Unbundled Voice Loop, Non-Design Voice Loop, billing for BST providing make-up (Engineering Information - E.I.)			UEANL	UEANM		13.44									
	Manual Order Coordination for UVL-SL1s (per loop)			UEANL	UEAMC		8.15	8.15								
	Order Coordination for Specified Conversion Time for UVL-SL1 (per LSR)			UEANL	OCOSL		18.09									
2-WIRE Unbundled COPPER LOOP																
	2-Wire Unbundled Copper Loop - Non-Designed Zone 1		1	UEQ	UEQ2X	11.20	34.14	15.10	21.25	4.15						
	2 Wire Unbundled Copper Loop - Non-Designed - Zone 2		2	UEQ	UEQ2X	13.27	34.14	15.10	21.25	4.15						
	2 Wire Unbundled Copper Loop - Non-Designed - Zone 3		3	UEQ	UEQ2X	15.07	34.14	15.10	21.25	4.15						
	Unbundled Miscellaneous Rate Element, Tag Loop at End User Premise			UEQ	URETL		8.33	0.83								
	Manual Order Coordination 2 Wire Unbundled Copper Loop - Non-Designed (per loop)			UEQ	USBMC		8.15									
	Unbundled Copper Loop, Non-Design Copper Loop, billing for BST providing make-up (Engineering Information - E.I.)			UEQ	UEQMU		13.44									
	Loop Testing - Basic 1st Half Hour			UEQ	URET1		34.16	34.16								
	Loop Testing - Basic Additional Half Hour			UEQ	URETA		19.85	19.85								
	CLEC to CLEC Conversion Charge Without Outside Dispatch (UCL-ND)			UEQ	UREWO		14.27	7.43								
UNBUNDLED EXCHANGE ACCESS LOOP																
2-WIRE ANALOG VOICE GRADE LOOP																
	2-Wire Analog Voice Grade Loop - Service Level 2 w/Loop or Ground Start Signaling - Zone 1		1	UEA	UEAL2	14.38	88.00	55.00	47.24	7.44						
	2-Wire Analog Voice Grade Loop - Service Level 2 w/Loop or Ground Start Signaling - Zone 2		2	UEA	UEAL2	22.85	88.00	55.00	47.24	7.44						
	2-Wire Analog Voice Grade Loop - Service Level 2 w/Loop or Ground Start Signaling - Zone 3		3	UEA	UEAL2	36.14	88.00	55.00	47.24	7.44						
	Order Coordination for Specified Conversion Time (per LSR)			UEA	OCOSL		18.09									
	2-Wire Analog Voice Grade Loop - Service Level 2 w/Reverse Battery Signaling - Zone 1		1	UEA	UEAR2	14.38	88.00	55.00	47.24	7.44						
	2-Wire Analog Voice Grade Loop - Service Level 2 w/Reverse Battery Signaling - Zone 2		2	UEA	UEAR2	22.85	88.00	55.00	47.24	7.44						
	2-Wire Analog Voice Grade Loop - Service Level 2 w/Reverse Battery Signaling - Zone 3		3	UEA	UEAR2	36.14	88.00	55.00	47.24	7.44						
	Order Coordination for Specified Conversion Time (per LSR)			UEA	OCOSL		18.09									
	CLEC to CLEC Conversion Charge without outside dispatch			UEA	UREWO		87.72	36.36								
	Loop Tagging - Service Level 2 (SL2)			UEA	URETL		11.21	1.10								
4-WIRE ANALOG VOICE GRADE LOOP																
	4-Wire Analog Voice Grade Loop - Zone 1		1	UEA	UEAL4	25.34	131.97	94.51	59.14	14.50						
	4-Wire Analog Voice Grade Loop - Zone 2		2	UEA	UEAL4	38.58	131.97	94.51	59.14	14.50						
	4-Wire Analog Voice Grade Loop - Zone 3		3	UEA	UEAL4	60.02	131.97	94.51	59.14	14.50						
	Order Coordination for Specified Conversion Time (per LSR)			UEA	OCOSL		18.09									
	CLEC to CLEC Conversion Charge without outside dispatch			UEA	UREWO		87.72	36.36								
2-WIRE ISDN DIGITAL GRADE LOOP																
	2-Wire ISDN Digital Grade Loop - Zone 1		1	UDN	U1L2X	21.88	117.24	79.77	52.88	10.54						
	2-Wire ISDN Digital Grade Loop - Zone 2		2	UDN	U1L2X	32.85	117.24	79.77	52.88	10.54						
	2-Wire ISDN Digital Grade Loop - Zone 3		3	UDN	U1L2X	48.55	117.24	79.77	52.88	10.54						
	Order Coordination For Specified Conversion Time (per LSR)			UDN	OCOSL		18.09									
	CLEC to CLEC Conversion Charge without outside dispatch			UDN	UREWO		91.63	44.16								
2-WIRE ASYMMETRICAL DIGITAL SUBSCRIBER LINE (ADSL) COMPATIBLE LOOP																
	2 Wire Unbundled ADSL Loop including manual service inquiry & facility reservation - Zone 1		1	UAL	UAL2X	11.01	110.00	68.00	47.24	7.44						
	2 Wire Unbundled ADSL Loop including manual service inquiry & facility reservation - Zone 2		2	UAL	UAL2X	12.73	110.00	68.00	47.24	7.44						
	2 Wire Unbundled ADSL Loop including manual service inquiry & facility reservation - Zone 3		3	UAL	UAL2X	14.30	110.00	68.00	47.24	7.44						
	Order Coordination for Specified Conversion Time (per LSR)			UAL	OCOSL		18.09									

UNBUNDLED NETWORK ELEMENTS - Alabama														Attachment: 2		Exhibit: A	
CATEGORY		RATE ELEMENTS	Interim	Zone	BCS	USOC	RATES ($)					Svc Order Submitted Elec per LSR	Svc Order Submitted Manually per LSR	Incremental Charge - Manual Svc Order vs. Electronic-1st	Incremental Charge - Manual Svc Order vs. Electronic-Add'l	Incremental Charge - Manual Svc Order vs. Electronic-Disc 1st	Incremental Charge - Manual Svc Order vs. Electronic-Disc Add'l
							Rec	Nonrecurring		Nonrecurring Disconnect		OSS Rates ($)					
								First	Add'l	First	Add'l	SOMEC	SOMAN	SOMAN	SOMAN	SOMAN	SOMAN
		2 Wire Unbundled ADSL Loop without manual service inquiry & facility reservaton - Zone 1		1	UAL	UAL2W	11.01	90.00	57.00	47.24	7.44						
		2 Wire Unbundled ADSL Loop without manual service inquiry & facility reservaton - Zone 2		2	UAL	UAL2W	12.73	90.00	57.00	47.24	7.44						
		2 Wire Unbundled ADSL Loop without manual service inquiry & facility reservaton - Zone 3		3	UAL	UAL2W	14.30	90.00	57.00	47.24	7.44						
		Order Coordination for Specified Conversion Time (per LSR)			UAL	OCOSL		18.09									
		CLEC to CLEC Conversion Charge without outside dispatch			UAL	UREWO		86.20	40.40								
	2-WIRE HIGH BIT RATE DIGITAL SUBSCRIBER LINE (HDSL) COMPATIBLE LOOP																
		2 Wire Unbundled HDSL Loop including manual service inquiry & facility reservation - Zone 1		1	UHL	UHL2X	8.74	110.00	68.00	47.24	7.44						
		2 Wire Unbundled HDSL Loop including manual service inquiry & facility reservation - Zone 2		2	UHL	UHL2X	10.17	110.00	68.00	47.24	7.44						
		2 Wire Unbundled HDSL Loop including manual service inquiry & facility reservation - Zone 3		3	UHL	UHL2X	11.44	110.00	68.00	47.24	7.44						
		Order Coordination for Specified Conversion Time (per LSR)			UHL	OCOSL		18.09									
		2 Wire Unbundled HDSL Loop without manual service inquiry and facility reservation - Zone 1		1	UHL	UHL2W	8.74	90.00	57.00	47.24	7.44						
		2 Wire Unbundled HDSL Loop without manual service inquiry and facility reservation - Zone 2		2	UHL	UHL2W	10.17	90.00	57.00	47.24	7.44						
		2 Wire Unbundled HDSL Loop without manual service inquiry and facility reservation - Zone 3		3	UHL	UHL2W	11.44	90.00	57.00	47.24	7.44						
		Order Coordination for Specified Conversion Time (per LSR)			UHL	OCOSL		18.09									
		CLEC to CLEC Conversion Charge without outside dispatch			UHL	UREWO		86.14	40.40								
	4-WIRE HIGH BIT RATE DIGITAL SUBSCRIBER LINE (HDSL) COMPATIBLE LOOP																
		4 Wire Unbundled HDSL Loop including manual service inquiry and facility reservation - Zone 1		1	UHL	UHL4X	13.95	148.36	68.00	51.70	9.73						
		4-Wire Unbundled HDSL Loop including manual service inquiry and facility reservation - Zone 2		2	UHL	UHL4X	15.56	148.36	68.00	51.70	9.73						
		4-Wire Unbundled HDSL Loop including manual service inquiry and facility reservation - Zone 3		3	UHL	UHL4X	15.25	148.36	68.00	51.70	9.73						
		Order Coordination for Specified Conversion Time (per LSR)			UHL	OCOSL		18.09									
		4-Wire Unbundled HDSL Loop without manual service inquiry and facility reservation - Zone 1		1	UHL	UHL4W	13.95	94.00	57.00	51.70	9.73						
		4-Wire Unbundled HDSL Loop without manual service inquiry and facility reservation - Zone 2		2	UHL	UHL4W	15.56	94.00	57.00	51.70	9.73						
		4-Wire Unbundled HDSL Loop without manual service inquiry and facility reservation - Zone 3		3	UHL	UHL4W	15.25	94.00	57.00	51.70	9.73						
		Order Coordination for Specified Conversion Time (per LSR)			UHL	OCOSL		18.09									
		CLEC to CLEC Conversion Charge without outside dispatch			UHL	UREWO		86.14	40.40								
	4-WIRE DS1 DIGITAL LOOP																
		4-Wire DS1 Digital Loop - Zone 1		1	USL	USLXX	82.55	252.47	157.54	44.70	11.71						
		4-Wire DS1 Digital Loop - Zone 2		2	USL, NTCD1	USLXX	154.18	252.47	157.54	44.70	11.71						
		4-Wire DS1 Digital Loop - Zone 3		3	USL, NTCD1	USLXX	314.52	252.47	157.54	44.70	11.71						
		Order Coordination for Specified Conversion Time (per LSR)			USL, NTCD1	OCOSL		18.09									
		CLEC to CLEC Conversion Charge without outside dispatch			USL, NTCD1	UREWO		101.09	43.05								
	4-WIRE 19.2, 56 OR 64 KBPS DIGITAL GRADE LOOP																
		4 Wire Unbundled Digital 19.2 Kbps		1	UDL	UDL19	26.09	126.27	88.80	59.14	14.50						
		4 Wire Unbundled Digital 19.2 Kbps		2	UDL	UDL19	35.95	126.27	88.80	59.14	14.50						
		4 Wire Unbundled Digital 19.2 Kbps		3	UDL	UDL19	37.88	126.27	88.80	59.14	14.50						
		4 Wire Unbundled Digital Loop 56 Kbps - Zone 1		1	UDL	UDL56	26.09	126.27	88.80	59.14	14.50						
		4 Wire Unbundled Digital Loop 56 Kbps - Zone 2		2	UDL	UDL56	35.95	126.27	88.80	59.14	14.50						
		4 Wire Unbundled Digital Loop 56 Kbps - Zone 3		3	UDL	UDL56	37.88	126.27	88.80	59.14	14.50						
		Order Coordination for Specified Conversion Time (per LSR)			UDL	OCOSL		18.09									
		4 Wire Unbundled Digital Loop 64 Kbps - Zone 1		1	UDL	UDL64	26.09	126.27	88.80	59.14	14.50						
		4 Wire Unbundled Digital Loop 64 Kbps - Zone 2		2	UDL	UDL64	35.95	126.27	88.80	59.14	14.50						
		4 Wire Unbundled Digital Loop 64 Kbps - Zone 3		3	UDL	UDL64	37.88	126.27	88.80	59.14	14.50						
		Order Coordination for Specified Conversion Time (per LSR)			UDL	OCOSL		18.09									
		CLEC to CLEC Conversion Charge without outside dispatch			UDL	UREWO		102.13	49.75								

UNBUNDLED NETWORK ELEMENTS - Alabama														Attachment: 2		Exhibit: A	
CATEGORY		RATE ELEMENTS	Interim	Zone	BCS	USOC	RATES ($)					Svc Order Submitted Elec per LSR	Svc Order Submitted Manually per LSR	Incremental Charge - Manual Svc Order vs. Electronic-1st	Incremental Charge - Manual Svc Order vs. Electronic-Add'l	Incremental Charge - Manual Svc Order vs. Electronic-Disc 1st	Incremental Charge - Manual Svc Order vs. Electronic-Disc Add'l
							Rec	Nonrecurring		Nonrecurring Disconnect		OSS Rates ($)					
								First	Add'l	First	Add'l	SOMEC	SOMAN	SOMAN	SOMAN	SOMAN	SOMAN
	2-WIRE Unbundled COPPER LOOP																
		2-Wire Unbundled Copper Loop-Designed including manual service inquiry & facility reservation - Zone 1		1	UCL	UCLPB	11.01	112.46	65.30	47.24	7.44						
		2-Wire Unbundled Copper Loop-Designed including manual service inquiry & facility reservation - Zone 2		2	UCL	UCLPB	12.73	112.46	65.30	47.24	7.44						
		2 Wire Unbundled Copper Loop-Designed including manual service inquiry & facility reservation - Zone 3		3	UCL	UCLPB	14.30	112.46	65.30	47.24	7.44						
		Order Coordination for Unbundled Copper Loops (per loop)			UCL	UCLMC		8.15	8.15								
		2-Wire Unbundled Copper Loop-Designed without manual service inquiry and facility reservation - Zone 1	I	1	UCL	UCLPW	11.01	91.46	54.30	47.24	7.44						
		2-Wire Unbundled Copper Loop-Designed without manual service inquiry and facility reservation - Zone 2	I	2	UCL	UCLPW	12.73	91.46	54.30	47.24	7.44						
		2-Wire Unbundled Copper Loop-Designed without manual service inquiry and facility reservation - Zone 3	I	3	UCL	UCLPW	14.30	91.46	54.30	47.24	7.44						
		Order Coordination for Unbundled Copper Loops (per loop)			UCL	UCLMC		8.15	8.15								
		CLEC to CLEC Conversion Charge without outside dispatch (UCL-Des)			UCL	UREWO		97.23	42.48								
	4-WIRE COPPER LOOP																
		4-Wire Copper Loop-Designed including manual service inquiry and facility reservation - Zone 1		1	UCL	UCL4S	17.36	135.21	88.05	51.70	9.73						
		4-Wire Copper Loop-Designed including manual service inquiry and facility reservation - Zone 2		2	UCL	UCL4S	20.76	135.21	88.05	51.70	9.73						
		4-Wire Copper Loop-Designed including manual service inquiry and facility reservation - Zone 3		3	UCL	UCL4S	28.21	135.21	88.05	51.70	9.73						
		Order Coordination for Unbundled Copper Loops (per loop)			UCL	UCLMC		8.15	8.15								
		4-Wire Copper Loop-Designed without manual service inquiry and facility reservation - Zone 1	I	1	UCL	UCL4W	17.36	114.21	67.05	51.70	9.73						
		4-Wire Copper Loop-Designed without manual service inquiry and facility reservation - Zone 2	I	2	UCL	UCL4W	20.76	114.21	67.05	51.70	9.73						
		4-Wire Copper Loop-Designed without manual service inquiry and facility reservation - Zone 3	I	3	UCL	UCL4W	28.21	114.21	67.05	51.70	9.73						
		Order Coordination for Unbundled Copper Loops (per loop)			UCL	UCLMC		8.15	8.15								
		CLEC to CLEC conversion Charge without outside dispatch			UCL	UREWO		97.23	42.48								
LOOP MODIFICATION																	
		Unbundled Loop Modification, Removal of Load Coils - 2 Wire pair less than or equal to 18k ft. per Unbundled Loop	I		UAL, UHL, UCL, UEQ, ULS, UEA, UEANL, UEPSR, UEPSB	ULM2L		0.00	0.00								
		Unbundled Loop Modification Removal of Load Coils - 4 Wire less than or equal to 18K ft, per Unbundled Loop	I		UHL, UCL, UEA	ULM4L		0.00	0.00								
		Unbundled Loop Modification Removal of Bridged Tap Removal, per unbundled loop	I		UAL, UHL, UCL, UEQ,ULS,UEA, UEANL, UEPSR, UEPSB	ULMBT		32.41	32.41								
SUB-LOOPS																	
	Sub-Loop Distribution																
		Sub-Loop - Per Cross Box Location - CLEC Feeder Facility Set-Up	I		UEANL	USBSA		244.42									
		Sub-Loop - Per Cross Box Location - Per 25 Pair Panel Set-Up	I		UEANL	USBSB		22.64									
		Sub-Loop - Per Building Equipment Room - CLEC Feeder Facility Set-Up	I		UEANL	USBSC		177.45									
		Sub-Loop - Per Building Equipment Room - Per 25 Pair Panel Set-Up	I		UEANL	USBSD		55.15									
		Sub-Loop Distribution Per 2-Wire Analog Voice Grade Loop - Zone 1		1	UEANL	USBN2	11.21	65.80	30.96	45.25	6.70						
		Sub-Loop Distribution Per 2-Wire Analog Voice Grade Loop - Zone 2		2	UEANL	USBN2	11.94	65.80	30.96	45.25	6.70						

UNBUNDLED NETWORK ELEMENTS - Alabama														Attachment: 2		Exhibit: A	
CATEGORY		RATE ELEMENTS	Interim	Zone	BCS	USOC	RATES ($)					Svc Order Submitted Elec per LSR	Svc Order Submitted Manually per LSR	Incremental Charge - Manual Svc Order vs. Electronic-1st	Incremental Charge - Manual Svc Order vs. Electronic-Add'l	Incremental Charge - Manual Svc Order vs. Electronic-Disc 1st	Incremental Charge - Manual Svc Order vs. Electronic-Disc Add'l
							Rec	Nonrecurring		Nonrecurring Disconnect		OSS Rates ($)					
								First	Add'l	First	Add'l	SOMEC	SOMAN	SOMAN	SOMAN	SOMAN	SOMAN
		Sub-Loop Distribution Per 2-Wire Analog Voice Grade Loop - Zone 3		3	UEANL	USBN2	16.86	65.80	30.96	45.25	6.70						
		Order Coordination for Unbundled Sub-Loops, per sub-loop pair			UEANL	USBMC		8.15	8.15								
		Sub-Loop Distribution Per 4-Wire Analog Voice Grade Loop - Zone 1		1	UEANL	USBN4	8.46	79.03	44.19	49.71	9.07						
		Sub-Loop Distribution Per 4-Wire Analog Voice Grade Loop - Zone 2		2	UEANL	USBN4	16.67	79.03	44.19	49.71	9.07						
		Sub-Loop Distribution Per 4-Wire Analog Voice Grade Loop - Zone 3		3	UEANL	USBN4	32.57	79.03	44.19	49.71	9.07						
		Order Coordination for Unbundled Sub-Loops, per sub-loop pair			UEANL	USBMC		8.15	8.15								
		Sub-Loop 2-Wire Intrabuilding Network Cable (INC)	I		UEANL	USBR2	2.27	53.01	18.17	45.25	6.70						
		Order Coordination for Unbundled Sub-Loops, per sub-loop pair			UEANL	USBMC		8.15	8.15								
		Sub-Loop 4-Wire Intrabuilding Network Cable (INC)	I		UEANL	USBR4	5.16	59.25	24.41	49.71	9.07						
		Order Coordination for Unbundled Sub-Loops, per sub-loop pair			UEANL	USBMC		8.15	8.15								
		Loop Testing - Basic 1st Half Hour			UEANL	URET1		34.16	34.16								
		Loop Testing - Basic Additional Half Hour			UEANL	URETA		19.85	19.85								
		2 Wire Copper Unbundled Sub-Loop Distribution - Zone 1		1	UEF	UCS2X	6.22	65.80	30.96	45.25	6.70						
		2 Wire Copper Unbundled Sub-Loop Distribution - Zone 2		2	UEF	UCS2X	8.76	65.80	30.96	45.25	6.70						
		2 Wire Copper Unbundled Sub-Loop Distribution - Zone 3		3	UEF	UCS2X	11.27	65.80	30.96	45.25	6.70						
		Order Coordination for Unbundled Sub-Loops, per sub-loop pair			UEF	USBMC		8.15	8.15								
		4 Wire Copper Unbundled Sub-Loop Distribution - Zone 1		1	UEF	UCS4X	6.11	79.03	44.19	49.71	9.07						
		4 Wire Copper Unbundled Sub-Loop Distribution - Zone 2		2	UEF	UCS4X	12.61	79.03	44.19	49.71	9.07						
		4 Wire Copper Unbundled Sub-Loop Distribution - Zone 3		3	UEF	UCS4X	15.36	79.03	44.19	49.71	9.07						
		Order Coordination for Unbundled Sub-Loops, per sub-loop pair			UEF	USBMC		8.15	8.15								
		Loop Testing - Basic 1st Half Hour			UEF	URET1		34.16	34.16								
		Loop Testing - Basic Additional Half Hour			UEF	URETA		19.85	19.85								
	Unbundled Network Terminating Wire (UNTW)																
		Unbundled Network Terminating Wire (UNTW) per Pair			UENTW	UENPP	0.40	30.01									
	Network Interface Device (NID)																
		Network Interface Device (NID) - 1-2 lines			UENTW	UND12		43.23	28.38								
		Network Interface Device (NID) - 1-6 lines			UENTW	UND16		63.97	49.11								
		Network Interface Device Cross Connect - 2 W			UENTW	UNDC2		5.87	5.87								
		Network Interface Device Cross Connect - 4W			UENTW	UNDC4		5.87	5.87								
UNE OTHER, PROVISIONING ONLY - NO RATE																	
		NID - Dispatch and Service Order for NID installation			UENTW	UNDBX	0.00	0.00									
		UNTW Circuit Id Establishment, Provisioning Only - No Rate			UENTW	UENCE	0.00	0.00									
		Unbundled Contract Name, Provisioning Only - No Rate			UEANL,UEF,UEQ,UENTW	UNECN	0.00	0.00									
HIGH CAPACITY UNBUNDLED LOCAL LOOP																	
		High Capacity Unbundled Local Loop - DS3 - Per Mile per month			UE3	1L5ND	8.38										
		High Capacity Unbundled Local Loop - DS3 - Facility Termination per month			UE3	UE3PX	308.98	451.52	263.94	119.49	83.58						
		High Capacity Unbundled Local Loop - STS-1 - Per Mile per month			UDLSX	1L5ND	8.38										
		High Capacity Unbundled Local Loop - STS-1 - Facility Termination per month			UDLSX	UDLS1	319.83	451.52	263.94	119.49	83.58						
LOOP MAKE-UP																	
		Loop Makeup - Preordering Without Reservation, per working or spare facility queried (Manual).			UMK	UMKLW		20.00	20.00								
		Loop Makeup - Preordering With Reservation, per spare facility queried (Manual).			UMK	UMKLP		21.00	21.00								

UNBUNDLED NETWORK ELEMENTS - Alabama														Attachment: 2		Exhibit: A	
CATEGORY		RATE ELEMENTS	Interim	Zone	BCS	USOC	RATES ($)					Svc Order Submitted Elec per LSR	Svc Order Submitted Manually per LSR	Incremental Charge - Manual Svc Order vs. Electronic-1st	Incremental Charge - Manual Svc Order vs. Electronic-Add'l	Incremental Charge - Manual Svc Order vs. Electronic-Disc 1st	Incremental Charge - Manual Svc Order vs. Electronic-Disc Add'l
							Rec	Nonrecurring		Nonrecurring Disconnect		OSS Rates ($)					
								First	Add'l	First	Add'l	SOMEC	SOMAN	SOMAN	SOMAN	SOMAN	SOMAN
		Loop Makeup--With or Without Reservation, per working or spare facility queried (Mechanized)			UMK	UMKMQ		0.59	0.59								
LINE SHARING AND LINE SPLITTING																	
	NOTE 1: The Line Sharing monthly recurring rates for all installations completed from October 02, 2003 through midnight October 01, 2004 shall be billed as follows:																
	NOTE 1: 10/02/2003 – 10/01/2004: 25% of the rate for an unbundled copper loop non-designed ("UCLND")																
	NOTE 1: 10/02/2004 – 10/01/2005: 50% of the rate for UCLND																
	NOTE 1: 10/02/2005 – 10/01/2006: 75% of the rate for UCLND																
	NOTE 1: Above will apply to USOCS: ULSDT and ULSCT																
	**NOTE 2: The Line Sharing monthly recurring rates with USOCs ULSDC and ULSCC applies only to circuits installed and inservice on or before October 1, 2003																
	LINE SHARING																
	SPLITTERS-CENTRAL OFFICE BASED																
		Line Sharing Splitter, per System 96 Line Capacity			ULS	ULSDA	155.97	188.79	0.00	177.98	0.00						
		Line Sharing Splitter, per System 24 Line Capacity			ULS	ULSDB	38.99	188.79	0.00	177.98	0.00						
		Line Sharing Splitter, Per System, 8 Line Capacity			ULS	ULSD8	12.73	377.58	0.00	355.96	0.00						
		Line Sharing-DLEC Owned Splitter in CO-CFA activaton-deactivation (per LSOD)			ULS	ULSDG		86.47	0.00	49.84	0.00						
	END USER ORDERING-CENTRAL OFFICE BASED LINE SHARING																
		Line Sharing - per Line Activation (BST Owned splitter) - OBSOLETE see **NOTE 2			ULS	ULSDC	0.61	18.51	10.60	10.01	4.92						
		Line Share Service, TRO per line activation, BST owned splitter - Central Office Located (50% of UCLND) - please see NOTE 1 (E:10/2/2004)			ULS	ULSDT	5.60	18.51	10.60	10.01	4.92						
		Line Share Service, TRO per line activation, BST owned splitter - Central Office Located (75% of UCLND) - please see NOTE 1 (E:10/2/2005)			ULS	ULSDT	8.40	18.51	10.60	10.01	4.92						
		Line Sharing - per Subsequent Activity per Line Rearrangement(BST Owned Splitter			ULS	ULSDS		16.39	8.19								
		Line Sharing - per Subsequent Activity per Line Rearrangement(DLEC Owned Splitter			ULS	ULSCS		16.39	8.19								
		Line Sharing - per Line Activation (DLEC owned Splitter) - OBSOLETE see **NOTE 2			ULS	ULSCC	0.61	47.44	19.31	20.02	9.83						
		Line Share Service, TRO per line activation, CLEC owned splitter - Central Office Located (50% of UCLND) - please see NOTE 1 (E:10/2/2004)			ULS	ULSCT	5.60	47.44	19.31	20.02	9.83						
		Line Share Service, TRO per line activation, CLEC owned splitter - Central Office Located (75% of UCLND) - please see NOTE 1 (E:10/2/2005)			ULS	ULSCT	8.40	47.44	19.31	20.02	9.83						
	LINE SPLITTING																
	MAINTENANCE																
		No Trouble Found - per 1/2 hour increments - Basic						80.00	55.00								
		No Trouble Found - per 1/2 hour increments - Overtime						120.00	82.50								
		No Trouble Found - per 1/2 hour increments - Premium						160.00	110.00								
UNBUNDLED DEDICATED TRANSPORT																	
	INTEROFFICE CHANNEL - DEDICATED TRANSPORT																
		Interoffice Channel - Dedicated Transport - 2-Wire Voice Grade - Per Mile per month			U1TVX	1L5XX	0.008838										
		Interoffice Channel - Dedicated Transport- 2- Wire Voice Grade - Facility Termination			U1TVX	U1TV2	21.13	40.54	27.41	16.74	6.90						
		Interoffice Channel - Dedicated Transpor t- 2-Wire Voice Grade Rev Bat. - Per Mile per month			U1TVX	1L5XX	0.008838										
		Interoffice Channel - Dedicated Transport- 2- Wire VG Rev Bat. - Facility Termination			U1TVX	U1TR2	21.13	40.54	27.41	16.74	6.90						
		Interoffice Channel - Dedicated Transport - 4-Wire Voice Grade - Per Mile per month			U1TVX	1L5XX	0.008838										
		Interoffice Channel - Dedicated Transport - 4- Wire Voice Grade - Facility Termination			U1TVX	U1TV4	18.73	40.54	27.41	16.74	6.90						
		Interoffice Channel - Dedicated Transport - 56 kbps - per mile per month			U1TDX	1L5XX	0.008838										

UNBUNDLED NETWORK ELEMENTS - Alabama														Attachment: 2		Exhibit: A	
CATEGORY		RATE ELEMENTS	Interim	Zone	BCS	USOC	RATES ($)					Svc Order Submitted Elec per LSR	Svc Order Submitted Manually per LSR	Incremental Charge - Manual Svc Order vs. Electronic-1st	Incremental Charge - Manual Svc Order vs. Electronic-Add'l	Incremental Charge - Manual Svc Order vs. Electronic-Disc 1st	Incremental Charge - Manual Svc Order vs. Electronic-Disc Add'l
							Rec	Nonrecurring		Nonrecurring Disconnect		OSS Rates ($)					
								First	Add'l	First	Add'l	SOMEC	SOMAN	SOMAN	SOMAN	SOMAN	SOMAN
		Interoffice Channel - Dedicated Transport - 56 kbps - Facility Termination			U1TDX	U1TD5	15.12	40.54	27.41	16.74	6.90						
		Interoffice Channel - Dedicated Transport - 64 kbps - per mile per month			U1TDX	1L5XX	0.008838										
		Interoffice Channel - Dedicated Transport - 64 kbps - Facility Termination			U1TDX	U1TD6	15.12	40.54	27.41	16.74	6.90						
		Interoffice Channel - Dedicated Channel - DS1 - Per Mile per month			U1TD1	1L5XX	0.18										
		Interoffice Channel - Dedicated Tranport - DS1 - Facility Termination			U1TD1	U1TF1	60.16	89.27	81.81	16.35	14.44						
		Interoffice Channel - Dedicated Transport - DS3 - Per Mile per month			U1TD3	1L5XX	4.09										
		Interoffice Channel - Dedicated Transport - DS3 - Facility Termination per month			U1TD3	U1TF3	703.52	278.75	162.76	60.20	28.46						
		Interoffice Channel - Dedicated Transport - STS-1 - Per Mile per month			U1TS1	1L5XX	4.09										
		Interoffice Channel - Dedicated Transport - STS-1 - Facility Termination			U1TS1	U1TFS	701.37	278.75	162.76	60.20	28.46						
DARK FIBER																	
		Dark Fiber, Four Fiber Strands, Per Route Mile or Fraction Thereof per month - Interoffice Channel			UDF, UDFCX	1L5DF	23.29										
		NRC Dark Fiber - Interoffice Channel			UDF, UDFCX	UDF14		639.09	137.87	317.06	197.66						
		Dark Fiber, Four Fiber Strands, Per Route Mile or Fraction Thereof per month - Local Loop			UDF, UDFCX	1L5DL	60.32										
		NRC Dark Fiber - Local Loop			UDF, UDFCX	UDFL4		639.09	137.87	317.06	197.66						
SIGNALING (CCS7)																	
		CCS7 Signaling Termination, Per STP Port			UDB	PT8SX	130.83										
		CCS7 Signaling Connection, Per link (A link)			UDB	TPP6A	15.46	35.53	35.53	16.44	16.44						
		CCS7 Signaling Connection, Per link (B link) (also known as D link)			UDB	TPP6B	15.46	35.53	35.53	16.44	16.44						
		CCS7 Signaling Connection-A link, per month			UDB	TPP9A	15.46	35.53	35.53	16.44	16.44						
		CCS7 Signaling Connection-B link(also known as D link) per month			UDB	TPP9B	15.46	35.53	35.53	16.44	16.44						
		CCS7 Signaling Usage Surrogate, per link per LATA			UDB	STU56	650.33										
		CCS7 Signaling Point Code, per Originating Point Code Establishment or Change, per STP affected			UDB	CCAPO		29.01	29.01	35.57	35.57						
E911 SERVICE																	
		Local Channel - Dedicated - 2-wr Voice Grade					13.97	193.10	33.17	36.64	3.20						
		Interoffice Transport - Dedicated - 2-wr Voice Grade Per Mile					0.008838										
		Interoffice Transport - Dedicated - 2-wr Voice Grade Per Facility Termination					21.13	40.54	27.41	16.74	6.90						
		Local Channel - Dedicated - DS1 - Zone 1					35.76	177.47	153.72	22.19	15.26						
		Local Channel - Dedicated - DS1 - Zone 2					49.98	177.47	153.72	22.19	15.26						
		Local Channel - Dedicated - DS1 - Zone 3					107.63	177.47	153.72	22.19	15.26						
		Interoffice Transport - Dedicated - DS1 Per Mile					0.18										
		Interoffice Transport - Dedicated - DS1 Per Facility Termination					60.16	89.27	81.81	16.35	14.44						
SELECTIVE ROUTING																	
		Selective Routing Per Unique Line Class Code Per Request Per Switch						84.70	84.70	14.11	14.11						
ENHANCED EXTENDED LINK (EELs)																	
	NOTE: The monthly recurring and non-recurring charges below will apply and the Switch-As-Is Charge will not apply for UNE combinations provisioned as ' Ordinarily Combined' Network Elements.																
	NOTE: The monthly recurring and the Switch-As-Is Charge and not the non-recurring charges below will apply for UNE combinations provisioned as ' Currently Combined' Network Elements.																
	EXTENTED 2-WIRE VOICE GRADE EXTENDED LOOP WITH DEDICATED DS1 INTEROFFICE TRANSPORT																
		First 2-Wire VG Loop (SL2) in Combination - Zone 1		1	UNCVX	UEAL2	14.38	88.00	55.00	47.24	7.44						
		First 2-Wire VG Loop (SL2) in Combination - Zone 2		2	UNCVX	UEAL2	22.85	88.00	55.00	47.24	7.44						
		First 2-Wire VG Loop (SL2) in Combination - Zone 3		3	UNCVX	UEAL2	36.14	88.00	55.00	47.24	7.44						
		Interoffice Transport - Dedicated - DS1 combination - Per Mile per month			UNC1X	1L5XX	0.18										

UNBUNDLED NETWORK ELEMENTS - Alabama														Attachment: 2		Exhibit: A	
CATEGORY		RATE ELEMENTS	Interim	Zone	BCS	USOC	RATES ($)					Svc Order Submitted Elec per LSR	Svc Order Submitted Manually per LSR	Incremental Charge - Manual Svc Order vs. Electronic-1st	Incremental Charge - Manual Svc Order vs. Electronic-Add'l	Incremental Charge - Manual Svc Order vs. Electronic-Disc 1st	Incremental Charge - Manual Svc Order vs. Electronic-Disc Add'l
							Rec	Nonrecurring		Nonrecurring Disconnect		OSS Rates ($)					
								First	Add'l	First	Add'l	SOMEC	SOMAN	SOMAN	SOMAN	SOMAN	SOMAN
		Interoffice Transport - Dedicated - DS1 combination - Facility Termination per month			UNC1X	U1TF1	60.16	89.27	81.81	16.35	14.44						
		1/0 Channelization System in combination Per Month			UNC1X	MQ1	101.06	91.04	62.57	10.54	9.79						
		Voice Grade COCI - Per Month			UNCVX	1D1VG	0.53	6.58	4.72								
		Each Additional 2-Wire VG Loop (SL 2) in Combination - Zone 1		1	UNCVX	UEAL2	14.38	88.00	55.00	47.24	7.44						
		Each Additional 2-Wire VG Loop (SL 2) in Combination - Zone 2		2	UNCVX	UEAL2	22.85	88.00	55.00	47.24	7.44						
		Each Additional 2-Wire VG Loop (SL 2) in Combination - Zone 3		3	UNCVX	UEAL2	36.14	88.00	55.00	47.24	7.44						
		Voice Grade COCI - Per Month			UNCVX	1D1VG	0.53	6.58	4.72								
		Nonrecurring Currently Combined Network Elements Switch -As-Is Charge			UNC1X	UNCCC		5.59	5.59	6.98	6.98						
	EXTENDED 4-WIRE VOICE GRADE EXTENDED LOOP WITH DEDICATED DS1 INTEROFFICE TRANSPORT																
		First 4-Wire Analog Voice Grade Loop in Combination - Zone 1		1	UNCVX	UEAL4	25.34	131.97	94.51	59.14	14.50						
		First 4-Wire Analog Voice Grade Loop in Combination - Zone 2		2	UNCVX	UEAL4	38.58	131.97	94.51	59.14	14.50						
		First 4-Wire Analog Voice Grade Loop in Combination - Zone 3		3	UNCVX	UEAL4	60.02	131.97	94.51	59.14	14.50						
		Interoffice Transport - Dedicated - DS1 combination - Per Mile Per Month			UNC1X	1L5XX	0.18										
		Interoffice Transport - Dedicated - DS1 - Facility Termination Per Month			UNC1X	U1TF1	60.16	89.27	81.81	16.35	14.44						
		1/0 Channel System in combination Per Month			UNC1X	MQ1	101.06	91.04	62.57	10.54	9.79						
		Voice Grade COCI in combination - per month			UNCVX	1D1VG	0.53	6.58	4.72								
		Additional 4-Wire Analog Voice Grade Loop in same DS1 Interoffice Transport Combination - Zone 1		1	UNCVX	UEAL4	25.34	131.97	94.51	59.14	14.50						
		Additional 4-Wire Analog Voice Grade Loop in same DS1 Interoffice Transport Combination - Zone 2		2	UNCVX	UEAL4	38.58	131.97	94.51	59.14	14.50						
		Additional 4-Wire Analog Voice Grade Loop in same DS1 Interoffice Transport Combination - Zone 3		3	UNCVX	UEAL4	60.02	131.97	94.51	59.14	14.50						
		Additional Voice Grade COCI in combination - per month			UNCVX	1D1VG	0.53	6.58	4.72								
		Nonrecurring Currently Combined Network Elements Switch -As-Is Charge			UNC1X	UNCCC		5.59	5.59	6.98	6.98						
	EXTENDED 4-WIRE 56 KBPS EXTENDED DIGITAL LOOP WITH DEDICATED DS1 INTEROFFICE TRANSPORT																
		First 4-Wire 56Kbps Digital Grade Loop in Combination - Zone 1		1	UNCDX	UDL56	26.09	126.27	88.80	59.14	14.50						
		First 4-Wire 56Kbps Digital Grade Loop in Combination - Zone 2		2	UNCDX	UDL56	35.95	126.27	88.80	59.14	14.50						
		First 4-Wire 56Kbps Digital Grade Loop in Combination - Zone 3		3	UNCDX	UDL56	37.88	126.27	88.80	59.14	14.50						
		Interoffice Transport - Dedicated - DS1 combination - Per Mile Per Month			UNC1X	1L5XX	0.18										
		Interoffice Transport - Dedicated - DS1 - combination Facility Termination Per Month			UNC1X	U1TF1	60.16	89.27	81.81	16.35	14.44						
		1/0 Channel System in combination Per Month			UNC1X	MQ1	101.06	91.04	62.57	10.54	9.79						
		OCU-DP COCI (data) per month (2.4-64kbs)			UNCDX	1D1DD	1.12	6.58	4.72								
		Additional 4-Wire 56Kbps Digital Grade Loop in same DS1 Interoffice Transport Combination - Zone 1		1	UNCDX	UDL56	26.09	126.27	88.80	59.14	14.50						
		Additional 4-Wire 56Kbps Digital Grade Loop in same DS1 Interoffice Transport Combination - Zone 2		2	UNCDX	UDL56	35.95	126.27	88.80	59.14	14.50						
		Additional 4-Wire 56Kbps Digital Grade Loop in same DS1 Interoffice Transport Combination - Zone 3		3	UNCDX	UDL56	37.88	126.27	88.80	59.14	14.50						
		Additional OCU-DP COCI (data) - in combination per month (2.4-64kbs)			UNCDX	1D1DD	1.12	6.58	4.72								
		Nonrecurring Currently Combined Network Elements Switch -As-Is Charge			UNC1X	UNCCC		5.59	5.59	6.98	6.98						
	EXTENDED 4-WIRE 64 KBPS EXTENDED DIGITAL LOOP WITH DEDICATED DS1 INTEROFFICE TRANSPORT																

UNBUNDLED NETWORK ELEMENTS - Alabama														Attachment: 2		Exhibit: A	
CATEGORY		RATE ELEMENTS	Interim	Zone	BCS	USOC	RATES ($)					Svc Order Submitted Elec per LSR	Svc Order Submitted Manually per LSR	Incremental Charge - Manual Svc Order vs. Electronic-1st	Incremental Charge - Manual Svc Order vs. Electronic-Add'l	Incremental Charge - Manual Svc Order vs. Electronic-Disc 1st	Incremental Charge - Manual Svc Order vs. Electronic-Disc Add'l
							Rec	Nonrecurring		Nonrecurring Disconnect		OSS Rates ($)					
								First	Add'l	First	Add'l	SOMEC	SOMAN	SOMAN	SOMAN	SOMAN	SOMAN
		First 4-Wire 64Kbps Digital Grade Loop in Combination - Zone 1		1	UNCDX	UDL64	26.09	126.27	88.80	59.14	14.50						
		First 4-Wire 64Kbps Digital Grade Loop in Combination - Zone 2		2	UNCDX	UDL64	35.95	126.27	88.80	59.14	14.50						
		First 4-Wire 64Kbps Digital Grade Loop in Combination - Zone 3		3	UNCDX	UDL64	37.88	126.27	88.80	59.14	14.50						
		Interoffice Transport - Dedicated - DS1 combination - Per Mile Per Month			UNC1X	1L5XX	0.18										
		interoffice Transport - Dedicated - DS1 combination - Facility Termination Per Month			UNC1X	U1TF1	60.16	89.27	81.81	16.35	14.44						
		1/0 Channel System in combination Per Month			UNC1X	MQ1	101.06	91.04	62.57	10.54	9.79						
		OCU-DP COCI (data) - in combination - per month (2.4-64kbs)			UNCDX	1D1DD	1.12	6.58	4.72								
		Additional 4-Wire 64Kbps Digital Grade Loop in same DS1 Interoffice Transport Combination - Zone 1		1	UNCDX	UDL64	26.09	126.27	88.80	59.14	14.50						
		Additional 4-Wire 64Kbps Digital Grade Loop in same DS1 Interoffice Transport Combination - Zone 2		2	UNCDX	UDL64	35.95	126.27	88.80	59.14	14.50						
		Additional 4-Wire 64Kbps Digital Grade Loop in same DS1 Interoffice Transport Combination - Zone 3		3	UNCDX	UDL64	37.88	126.27	88.80	59.14	14.50						
		Additional OCU-DP COCI (data) - in combination - per month (2.4-64kbs)			UNCDX	1D1DD	1.12	6.58	4.72								
		Nonrecurring Currently Combined Network Elements Switch -As-Is Charge			UNC1X	UNCCC		5.59	5.59	6.98	6.98						
	EXTENDED 4-WIRE DS1 DIGITAL EXTENDED LOOP WITH DEDICATED DS1 INTEROFFICE TRANSPORT																
		4-Wire DS1 Digital Loop in Combination - Zone 1		1	UNC1X	USLXX	82.55	252.47	157.54	44.70	11.71						
		4-Wire DS1 Digital Loop in Combination - Zone 2		2	UNC1X	USLXX	154.18	252.47	157.54	44.70	11.71						
		4-Wire DS1 Digital Loop in Combination - Zone 3		3	UNC1X	USLXX	314.52	252.47	157.54	44.70	11.71						
		Interoffice Transport - Dedicated - DS1 combination - Per Mile Per Month			UNC1X	1L5XX	0.18										
		Interoffice Transport - Dedicated - DS1 combination - Facility Termination Per Month			UNC1X	U1TF1	60.16	89.27	81.81	16.35	14.44						
		Nonrecurring Currently Combined Network Elements Switch -As-Is Charge			UNC1X	UNCCC		5.59	5.59	6.98	6.98						
	EXTENDED 4-WIRE DS1 DIGITAL EXTENDED LOOP WITH DEDICATED DS3 INTEROFFICE TRANSPORT																
		First DS1Loop in Combination - Zone 1		1	UNC1X	USLXX	82.55	252.47	157.54	44.70	11.71						
		First DS1Loop in Combination - Zone 2		2	UNC1X	USLXX	154.18	252.47	157.54	44.70	11.71						
		First DS1Loop in Combination - Zone 3		3	UNC1X	USLXX	314.52	252.47	157.54	44.70	11.71						
		Interoffice Transport - Dedicated - DS3 combination - Per Mile Per Month			UNC3X	1L5XX	4.09										
		Interoffice Transport - Dedicated - DS3 - Facility Termination per month			UNC3X	U1TF3	703.52	278.75	162.76	60.20	58.46						
		3/1 Channel System in combination per month			UNC3X	MQ3	166.13	178.14	93.97	33.26	31.83						
		DS1 COCI in combination per month			UNC1X	UC1D1	12.70	6.58	4.72								
		Additional DS1Loop in DS3 Interoffice Transport Combination - Zone 1		1	UNC1X	USLXX	82.55	252.47	157.54	44.70	11.71						
		Additional DS1Loop in DS3 Interoffice Transport Combination - Zone 2		2	UNC1X	USLXX	154.18	252.47	157.54	44.70	11.71						
		Additional DS1Loop in DS3 Interoffice Transport Combination - Zone 3		3	UNC1X	USLXX	314.52	252.47	157.54	44.70	11.71						
		Additoinal DS1 COCI in combination per month			UNC1X	UC1D1	12.70	6.58	4.72								
		Nonrecurring Currently Combined Network Elements Switch -As-Is Charge			UNC3X	UNCCC		5.59	5.59	6.98	6.98						
	EXTENDED 2-WIRE VOICE GRADE EXTENDED LOOP/ 2 WIRE VOICE GRADE INTEROFFICE TRANSPORT																
		2-WireVG Loop in combination - Zone 1		1	UNCVX	UEAL2	14.38	88.00	55.00	47.24	7.44						
		2-WireVG Loop in combination - Zone 2		2	UNCVX	UEAL2	22.85	88.00	55.00	47.24	7.44						
		2-WireVG Loop in combination - Zone 3		3	UNCVX	UEAL2	36.14	88.00	55.00	47.24	7.44						
		Interoffice Transport - 2-wire VG - Dedicated- Per Mile Per Month			UNCVX	1L5XX	0.008838										
		Interoffice Transport - 2-wire VG - Dedicated - Facility Termination per month			UNCVX	U1TV2	21.13	40.54	27.41	16.74	6.90						

UNBUNDLED NETWORK ELEMENTS - Alabama														Attachment: 2		Exhibit: A	
CATEGORY	RATE ELEMENTS	Interim	Zone	BCS	USOC	RATES ($)					Svc Order Submitted Elec per LSR	Svc Order Submitted Manually per LSR	Incremental Charge - Manual Svc Order vs. Electronic-1st	Incremental Charge - Manual Svc Order vs. Electronic-Add'l	Incremental Charge - Manual Svc Order vs. Electronic-Disc 1st	Incremental Charge - Manual Svc Order vs. Electronic-Disc Add'l
						Rec	Nonrecurring		Nonrecurring Disconnect		OSS Rates ($)					
							First	Add'l	First	Add'l	SOMEC	SOMAN	SOMAN	SOMAN	SOMAN	SOMAN
	Nonrecurring Currently Combined Network Elements Switch -As-Is Charge			UNCVX	UNCCC		5.59	5.59	6.98	6.98						
	EXTENDED 4-WIRE VOICE GRADE EXTENDED LOOP/ 4 WIRE VOICE GRADE INTEROFFICE TRANSPORT															
	4-WireVG Loop in combination - Zone 1		1	UNCVX	UEAL4	25.34	131.97	94.51	59.14	14.50						
	4-WireVG Loop in combination - Zone 2		2	UNCVX	UEAL4	38.58	131.97	94.51	59.14	14.50						
	4-WireVG Loop in combination - Zone 3		3	UNCVX	UEAL4	60.02	131.97	94.51	59.14	14.50						
	Interoffice Transport - 4-wire VG - Dedicated - Per Mile Per Month			UNCVX	1L5XX	0.008838										
	Interoffice Transport - 4-wire VG - Dedicated - Facility Termination per month			UNCVX	U1TV4	18.73	40.54	27.41	16.74	6.90						
	Nonrecurring Currently Combined Network Elements Switch -As-Is Charge			UNCVX	UNCCC		5.59	5.59	6.98	6.98						
	EXTENDED DS3 DIGITAL EXTENDED LOOP WITH DEDICATED DS3 INTEROFFICE TRANSPORT															
	DS3 Local Loop in combination - per mile per month			UNC3X	1L5ND	8.38										
	DS3 Local Loop in combination - Facility Termination per month			UNC3X	UE3PX	308.98	451.52	263.94	119.49	83.58						
	Interoffice Transport - Dedicated - DS3 - Per Mile per month			UNC3X	1L5XX	4.09										
	Interoffice Transport - Dedicated - DS3 combination - Facility Termination per per month			UNC3X	U1TF3	703.52	278.75	162.76	60.20	58.46						
	Nonrecurring Currently Combined Network Elements Switch -As-Is Charge			UNC3X	UNCCC		5.59	5.59	6.98	6.98						
	EXTENDED STS-1 DIGITAL EXTENDED LOOP WITH DEDICATED STS-1 INTEROFFICE TRANSPORT															
	STS-1 Local Lolp in combination - per mile per month			UNCSX	1L5ND	8.38										
	STS-1 Local Loop in combination - Facility Termination per month			UNCSX	UDLS1	319.83	451.52	263.94	119.49	83.58						
	Interoffice Transport - Dedicated - STS-1 combination - per mile per month			UNCSX	1L5XX	4.09										
	Interoffice Transport - Dedicated - STS-1 combination - Facility Termination per month			UNCSX	U1TFS	701.37	278.75	162.76	60.20	58.46						
	Nonrecurring Currently Combined Network Elements Switch -As-Is Charge			UNCSX	UNCCC		5.59	5.59	6.98	6.98						
	EXTENDED 2-WIRE ISDN EXTENDED LOOP WITH DS1 INTEROFFICE TRANSPORT															
	First 2-Wire ISDN Loop in Combination - Zone 1		1	UNCNX	U1L2X	21.88	117.24	79.77	52.88	10.54						
	First 2-Wire ISDN Loop in Combination - Zone 2		2	UNCNX	U1L2X	32.85	117.24	79.77	52.88	10.54						
	First 2-Wire ISDN Loop in Combination - Zone 3		3	UNCNX	U1L2X	48.55	117.24	79.77	52.88	10.54						
	Interoffice Transport - Dedicated - DS1 combination - per mile per month			UNC1X	1L5XX	0.18										
	Interoffice Transport - Dedicated - DS1 combination - Facility Termination per month			UNC1X	U1TF1	60.16	89.27	81.81	16.35	14.44						
	1/0 Channel System in combination - per month			UNC1X	MQ1	101.06	91.04	62.57	10.54	9.79						
	2-wire ISDN COCI (BRITE) - in combination - per month			UNCNX	UC1CA	2.41	6.58	4.72								
	Additional 2-wire ISDN Loop in same DS1Interoffice Transport Combination - Zone 1		1	UNCNX	U1L2X	21.88	117.24	79.77	52.88	10.54						
	Additional 2-wire ISDN Loop in same DS1Interoffice Transport Combination - Zone 2		2	UNCNX	U1L2X	32.85	117.24	79.77	52.88	10.54						
	Additional 2-wire ISDN Loop in same DS1Interoffice Transport Combination - Zone 3		3	UNCNX	U1L2X	48.55	117.24	79.77	52.88	10.54						
	Additional 2-wire ISDN COCI (BRITE) - in combination- per month			UNCNX	UC1CA	2.41	6.58	4.72								
	Nonrecurring Currently Combined Network Elements Switch -As-Is Charge			UNC1X	UNCCC		5.59	5.59	6.98	6.98						
	EXTENDED 4-WIRE DS1 DIGITAL EXTENDED LOOP WITH DEDICATED STS-1 INTEROFFICE TRANSPORT															
	First DS1 Loop Combination - Zone 1		1	UNC1X	USLXX	82.55	252.47	157.54	44.70	11.71						
	First DS1 Loop Combination - Zone 2		2	UNC1X	USLXX	154.18	252.47	157.54	44.70	11.71						
	First DS1 Loop Combination - Zone 3		3	UNC1X	USLXX	314.52	252.47	157.54	44.70	11.71						
	Interoffice Transport - Dedicated - STS-1 combination - Per Mile Per Month			UNCSX	1L5XX	4.09										
	Interoffice Transport - Dedicated - STS-1 combination - Facility Termination per month			UNCSX	U1TFS	701.37	278.75	162.76	60.20	58.46						

UNBUNDLED NETWORK ELEMENTS - Alabama														Attachment: 2		Exhibit: A	
CATEGORY		RATE ELEMENTS	Interim	Zone	BCS	USOC	RATES ($)					Svc Order Submitted Elec per LSR	Svc Order Submitted Manually per LSR	Incremental Charge - Manual Svc Order vs. Electronic-1st	Incremental Charge - Manual Svc Order vs. Electronic-Add'l	Incremental Charge - Manual Svc Order vs. Electronic-Disc 1st	Incremental Charge - Manual Svc Order vs. Electronic-Disc Add'l
							Rec	Nonrecurring		Nonrecurring Disconnect		OSS Rates ($)					
								First	Add'l	First	Add'l	SOMEC	SOMAN	SOMAN	SOMAN	SOMAN	SOMAN
		3/1 Channel System in combination per month			UNCSX	MQ3	166.13	178.14	93.97	33.26	31.83						
		DS1 COCI in combination per month			UNC1X	UC1D1	12.70	6.58	4.72								
		Additional DS1Loop in the same STS-1 Interoffice Transport Combination - Zone 1		1	UNC1X	USLXX	82.55	252.47	157.54	44.70	11.71						
		Additional DS1Loop in the same STS-1 Interoffice Transport Combination - Zone 2		2	UNC1X	USLXX	154.18	252.47	157.54	44.70	11.71						
		Additional DS1Loop in the same STS-1 Interoffice Transport Combination - Zone 3		3	UNC1X	USLXX	314.52	252.47	157.54	44.70	11.71						
		DS1 COCI in combination per month			UNC1X	UC1D1	12.70	6.58	4.72								
		Nonrecurring Currently Combined Network Elements Switch -As-Is Charge			UNCSX	UNCCC		5.59	5.59	6.98	6.98						
	EXTENDED 4-WIRE 56 KBPS DIGITAL EXTENDED LOOP WITH 56 KBPS INTEROFFICE TRANSPORT																
		4-wire 56 kbps Local Loop in combination - Zone 1		1	UNCDX	UDL56	26.09	126.27	88.80	59.14	14.50						
		4-wire 56 kbps Local Loop in combination - Zone 2		2	UNCDX	UDL56	35.95	126.27	88.80	59.14	14.50						
		4-wire 56 kbps Local Loop in combination - Zone 3		3	UNCDX	UDL56	37.88	126.27	88.80	59.14	14.50						
		Interoffice Transport - Dedicated - 4-wire 56 kbps combination - Per Mile per month			UNCDX	1L5XX	0.008838										
		Interoffice Transport - Dedicated - 4-wire 56 kbps combination - Facility Termination per month			UNCDX	U1TD5	15.12	40.54	27.41	16.74	6.90						
		Nonrecurring Currently Combined Network Elements Switch -As-Is Charge			UNCDX	UNCCC		5.59	5.59	6.98	6.98						
	EXTENDED 4-WIRE 64 KBPS DIGITAL EXTENDED LOOP WITH 64 KBPS INTEROFFICE TRANSPORT																
		4-wire 64 kbps Lcoal Loop in Combination - Zone 1		1	UNCDX	UDL64	26.09	126.27	88.80	59.14	14.50						
		4-wire 64 kbps Lcoal Loop in Combination - Zone 2		2	UNCDX	UDL64	35.95	126.27	88.80	59.14	14.50						
		4-wire 64 kbps Lcoal Loop in Combination - Zone 3		3	UNCDX	UDL64	37.88	126.27	88.80	59.14	14.50						
		Interoffice Transport - Dedicated - 4-wire 64 kbps combination - Per Mile per month			UNCDX	1L5XX	0.008838										
		Interoffice Transport - Dedicated - 4-wire 64 kbps combination - Facility Termination per month			UNCDX	U1TD6	15.12	40.54	27.41	16.74	6.90						
		Nonrecurring Currently Combined Network Elements Switch -As-Is Charge			UNCDX	UNCCC		5.59	5.59	6.98	6.98						
	EXTENDED 2-WIRE VOICE GRADE LOOP WITH DS1 INTEROFFICE TRANSPORT w/ 3/1 MUX																
		First 2-wire VG Loop (SL2) in Combination - Zone 1		1	UNCVX	UEAL2	14.38	88.00	55.00	47.24	7.44						
		First 2-wire VG Loop (SL2) in Combination - Zone 2		2	UNCVX	UEAL2	22.85	88.00	55.00	47.24	7.44						
		First 2-wire VG Loop (SL2) in Combination - Zone 3		3	UNCVX	UEAL2	36.14	88.00	55.00	47.24	7.44						
		First Interoffice Transport - Dedicated - DS1 combination - Per Mile			UNC1X	1L5XX	0.18										
		First Interoffice Transport - Dedicated - DS1 combination - Facility Termination per month			UNC1X	U1TF1	60.16	89.27	81.81	16.35	14.44						
		Per each DS1 Channelization System Per Month			UNC1X	MQ1	101.06	91.04	62.57	10.54	9.79						
		Per each Voice Grade COCI - Per Month per month			UNCVX	1D1VG	0.53	6.58	4.72								
		3/1 Channel System in combination per month			UNC3X	MQ3	166.13	178.14	93.97	33.26	31.83						
		Per each DS1 COCI in combination per month			UNC1X	UC1D1	12.70	6.58	4.72								
		Each Additional 2-Wire VG Loop(SL 2) in the same DS1 Interoffice Transport Combination - Zone 1		1	UNCVX	UEAL2	14.38	88.00	55.00	47.24	7.44						
		Each Additional 2-Wire VG Loop(SL2) in the same DS1 Interoffice Transport Combination - Zone 2		2	UNCVX	UEAL2	22.85	88.00	55.00	47.24	7.44						
		Each Additional 2-Wire VG Loop(SL2) in the same DS1 Interoffice Transport Combination - Zone 3		3	UNCVX	UEAL2	36.14	88.00	55.00	47.24	7.44						
		Each Additional Voice Grade COCI - in combination - per month			UNCVX	1D1VG	0.53	6.58	4.72								
		Each Additional DS1 Interoffice Channel per mile in same 3/1 Channel System per month			UNC1X	1L5XX	0.18										
		Each Additional DS1 Interoffice Channel Facility Termination in same 3/1 Channel System per month			UNC1X	U1TF1	60.16	89.27	81.81	16.35	14.44						
		Each Additional DS1 COCI combination per month			UNC1X	UC1D1	12.70	6.58	4.72								
		Nonrecurring Currently Combined Network Elements Switch -As-Is Charge			UNC1X	UNCCC		5.59	5.59	6.98	6.98						
	EXTENDED 4-WIRE VOICE GRADE LOOP WITH DEDICATED DS1 INTEROFFICE TRANSPORT w/ 3/1 MUX																

UNBUNDLED NETWORK ELEMENTS - Alabama														Attachment: 2		Exhibit: A	
CATEGORY		RATE ELEMENTS	Interim	Zone	BCS	USOC	RATES ($)					Svc Order Submitted Elec per LSR	Svc Order Submitted Manually per LSR	Incremental Charge - Manual Svc Order vs. Electronic-1st	Incremental Charge - Manual Svc Order vs. Electronic-Add'l	Incremental Charge - Manual Svc Order vs. Electronic-Disc 1st	Incremental Charge - Manual Svc Order vs. Electronic-Disc Add'l
							Rec	Nonrecurring		Nonrecurring Disconnect		OSS Rates ($)					
								First	Add'l	First	Add'l	SOMEC	SOMAN	SOMAN	SOMAN	SOMAN	SOMAN
		First 4-Wire Analog Voice Grade Local Loop in Combination - Zone 1		1	UNCVX	UEAL4	25.34	131.97	94.51	59.14	14.50						
		First 4-Wire Analog Voice Grade Local Loop in Combination - Zone 2		2	UNCVX	UEAL4	38.58	131.97	94.51	59.14	14.50						
		First 4-Wire Analog Voice Grade Local Loop in Combination - Zone 3		3	UNCVX	UEAL4	60.02	131.97	94.51	59.14	14.50						
		First Interoffice Transport - Dedicated - DS1 combination - Per Mile Per Month			UNC1X	1L5XX	0.18										
		First Interoffice Transport - Dedicated - DS1 - Facility Termination Per Month			UNC1X	U1TF1	60.16	89.27	81.81	16.35	14.44						
		Per each 1/0 Channel System in combination Per Month			UNC1X	MQ1	101.06	91.04	62.57	10.54	9.79						
		Per each Voice Grade COCI in combination - per month			UNCVX	1D1VG	0.53	6.58	4.72								
		3/1 Channel System in combination per month			UNC3X	MQ3	166.13	178.14	93.97	33.26	31.83						
		Per each DS1 COCI in combination per month			UNC1X	UC1D1	12.70	6.58	4.72								
		Additional 4-Wire Analog Voice Grade Loop in same DS1 Interoffice Transport Combination - Zone 1		1	UNCVX	UEAL4	25.34	131.97	94.51	59.14	14.50						
		Additional 4-Wire Analog Voice Grade Loop in same DS1 Interoffice Transport Combination - Zone 2		2	UNCVX	UEAL4	38.58	131.97	94.51	59.14	14.50						
		Additional 4-Wire Analog Voice Grade Loop in same DS1 Interoffice Transport Combination - Zone 3		3	UNCVX	UEAL4	60.02	131.97	94.51	59.14	14.50						
		Each Additional DS1 Interoffice Channel per mile in same 3/1 Channel System per month			UNC1X	1L5XX	0.18										
		Each Additional DS1 Interoffice Channel Facility Termination in same 3/1 Channel System per month			UNC1X	U1TF1	60.16	89.27	81.81	16.35	14.44						
		Additional Voice Grade COCI - in combination - per month			UNCVX	1D1VG	0.53	6.58	4.72								
		Nonrecurring Currently Combined Network Elements Switch -As-Is Charge			UNC1X	UNCCC		5.59	5.59	6.98	6.98						
	EXTENDED 4-WIRE 56 KBPS DIGITAL LOOP WITH DEDICATED DS1 INTEROFFICE TRANSPORT w/ 3/1 MUX																
		First 4-Wire 56Kbps Digital Grade Local Loop in Combination - Zone 1		1	UNCDX	UDL56	26.09	126.27	88.80	59.14	14.50						
		First 4-Wire 56Kbps Digital Grade Local Loop in Combination - Zone 2		2	UNCDX	UDL56	35.95	126.27	88.80	59.14	14.50						
		First 4-Wire 56Kbps Digital Grade Local Loop in Combination - Zone 3		3	UNCDX	UDL56	37.88	126.27	88.80	59.14	14.50						
		First Interoffice Transport - Dedicated - DS1 combination - Per Mile Per Month			UNC1X	1L5XX	0.18										
		First Interoffice Transport - Dedicated - DS1 - combination Facility Termination Per Month			UNC1X	U1TF1	60.16	89.27	81.81	16.35	14.44						
		Per each 1/0 Channel System in combination Per Month			UNC1X	MQ1	101.06	91.04	62.57	10.54	9.79						
		Per each OCU-DP COCI (data) COCI per month (2.4-64kbs)			UNCDX	1D1DD	1.12	6.58	4.72								
		3/1 Channel System in combination per month			UNC3X	MQ3	166.13	178.14	93.97	33.26	31.83						
		Per each DS1 COCI in combination per month			UNC1X	UC1D1	12.70	6.58	4.72								
		Additional 4-Wire 56Kbps Digital Grade Loop in same DS1 Interoffice Transport Combination - Zone 1		1	UNCDX	UDL56	26.09	126.27	88.80	59.14	14.50						
		Additional 4-Wire 56Kbps Digital Grade Loop in same DS1 Interoffice Transport Combination - Zone 2		2	UNCDX	UDL56	35.95	126.27	88.80	59.14	14.50						
		Additional 4-Wire 56Kbps Digital Grade Loop in same DS1 Interoffice Transport Combination - Zone 3		3	UNCDX	UDL56	37.88	126.27	88.80	59.14	14.50						
		OCU-DP COCI (data) COCI in combination per month (2.4-64kbs)			UNCDX	1D1DD	1.12	6.58	4.72								
		Each Additional DS1 Interoffice Channel per mile in same 3/1 Channel System per month			UNC1X	1L5XX	0.18										
		Each Additional DS1 Interoffice Channel Facility Termination in same 3/1 Channel System per month			UNC1X	U1TF1	60.16	89.27	81.81	16.35	14.44						
		Each Additional DS1 COCI in the same 3/1 channel system combination per month			UNC1X	UC1D1	12.70	6.58	4.72								
		Nonrecurring Currently Combined Network Elements Switch -As-Is Charge			UNC1X	UNCCC		5.59	5.59	6.98	6.98						
	EXTENDED 4-WIRE 64 KBPS DIGITAL LOOP WITH DEDICATED DS1 INTEROFFICE TRANSPORT w/ 3/1 MUX																

UNBUNDLED NETWORK ELEMENTS - Alabama														Attachment: 2		Exhibit: A	
CATEGORY		RATE ELEMENTS	Interim	Zone	BCS	USOC	RATES ($)					Svc Order Submitted Elec per LSR	Svc Order Submitted Manually per LSR	Incremental Charge - Manual Svc Order vs. Electronic-1st	Incremental Charge - Manual Svc Order vs. Electronic-Add'l	Incremental Charge - Manual Svc Order vs. Electronic-Disc 1st	Incremental Charge - Manual Svc Order vs. Electronic-Disc Add'l
							Rec	Nonrecurring		Nonrecurring Disconnect		OSS Rates ($)					
								First	Add'l	First	Add'l	SOMEC	SOMAN	SOMAN	SOMAN	SOMAN	SOMAN
		First 4-Wire 64Kbps Digital Grade Loop in a DS1 Interoffice Transport Combination - Zone 1		1	UNCDX	UDL64	26.09	126.27	88.80	59.14	14.50						
		First 4-Wire 64Kbps Digital Grade Loop in a DS1 Interoffice Transport Combination - Zone 2		2	UNCDX	UDL64	35.95	126.27	88.80	59.14	14.50						
		First 4-Wire 64Kbps Digital Grade Loop in a DS1 Interoffice Transport Combination - Zone 3		3	UNCDX	UDL64	37.88	126.27	88.80	59.14	14.50						
		First Interoffice Transport - Dedicated - DS1 combination - Per Mile Per Month			UNC1X	1L5XX	0.18										
		First Interoffice Transport - Dedicated - DS1 combination - Facility Termination Per Month			UNC1X	U1TF1	60.16	89.27	81.81	16.35	14.44						
		Per each Channel System 1/0 in combination Per Month			UNC1X	MQ1	101.06	91.04	62.57	10.54	9.79						
		Per each OCU-DP COCI (data) in combination - per month (2.4-64kbs)			UNCDX	1D1DD	1.12	6.58	4.72								
		3/1 Channel System in combination per month			UNC3X	MQ3	166.13	178.14	93.97	33.26	31.83						
		Per each DS1 COCI in combination per month			UNC1X	UC1D1	12.70	6.58	4.72								
		Additional 4-Wire 64Kbps Digital Grade Loop in same DS1 Interoffice Transport Combination - Zone 1		1	UNCDX	UDL64	26.09	126.27	88.80	59.14	14.50						
		Additional 4-Wire 64Kbps Digital Grade Loop in same DS1 Interoffice Transport Combination - Zone 2		2	UNCDX	UDL64	35.95	126.27	88.80	59.14	14.50						
		Additional 4-Wire 64Kbps Digital Grade Loop in same DS1 Interoffice Transport Combination - Zone 3		3	UNCDX	UDL64	37.88	126.27	88.80	59.14	14.50						
		Additional OCU-DP COCI (data) - DS1 to DS0 Channel System combination - per month (2.4-64kbs)			UNCDX	1D1DD	1.12	6.58	4.72								
		Each Additional DS1 Interoffice Channel per mile in same 3/1 Channel System per month			UNC1X	1L5XX	0.18										
		Each Additional DS1 Interoffice Channel Facility Termination in same 3/1 Channel System per month			UNC1X	U1TF1	60.16	89.27	81.81	16.35	14.44						
		Each Additional DS1 COCI in the same 3/1 channel system combination per month			UNC1X	UC1D1	12.70	6.58	4.72								
		Nonrecurring Currently Combined Network Elements Switch -As-Is Charge			UNC1X	UNCCC		5.59	5.59	6.98	6.98						
	EXTENDED 2-WIRE ISDN LOOP WITH DS1 INTEROFFICE TRANSPORT w/ 3/1 MUX																
		First 2-Wire ISDN Loop in a DS1 Interoffice Combination Transport - Zone 1		1	UNCNX	U1L2X	21.88	117.24	79.77	52.88	10.54						
		First 2-Wire ISDN Loop in a DS1 Interoffice Combination Transport - Zone 2		2	UNCNX	U1L2X	32.85	117.24	79.77	52.88	10.54						
		First 2-Wire ISDN Loop in a DS1 Interoffice Combination Transport - Zone 3		3	UNCNX	U1L2X	48.55	117.24	79.77	52.88	10.54						
		First Interoffice Transport - Dedicated - DS1 combination - Per Mile per month			UNC1X	1L5XX	0.18										
		First Interoffice Transport - Dedicated - DS1 combination - Facility Termination per month			UNC1X	U1TF1	60.16	89.27	81.81	16.35	14.44						
		Per each Channel System 1/0 in combination - per month			UNC1X	MQ1	101.06	91.04	62.57	10.54	9.79						
		Per each 2-wire ISDN COCI (BRITE) in combination - per month			UNCNX	UC1CA	2.41	6.58	4.72								
		3/1 Channel System in combination per month			UNC3X	MQ3	166.13	178.14	93.97	33.26	31.83						
		Per each DS1 COCI in combination per month			UNC1X	UC1D1	12.70	6.58	4.72								
		Additional 2-wire ISDN Loop in same DS1Interoffice Transport Combination - Zone 1		1	UNCNX	U1L2X	21.88	117.24	79.77	52.88	10.54						
		Additional 2-wire ISDN Loop in same DS1Interoffice Transport Combination - Zone 2		2	UNCNX	U1L2X	32.85	117.24	79.77	52.88	10.54						
		Additional 2-wire ISDN Loop in same DS1Interoffice Transport Combination - Zone 3		3	UNCNX	U1L2X	48.55	117.24	79.77	52.88	10.54						
		Additional 2-wire ISDN COCI (BRITE) in same 1/0 channel system combination- per month			UNCNX	UC1CA	2.41	6.58	4.72								
		Each Additional DS1 Interoffice Channel per mile in same 3/1 Channel System per month			UNC1X	1L5XX	0.18										
		Each Additional DS1 Interoffice Channel Facility Termination in same 3/1 Channel System per month			UNC1X	U1TF1	60.16	89.27	81.81	16.35	14.44						

UNBUNDLED NETWORK ELEMENTS - Alabama														Attachment: 2		Exhibit: A	
CATEGORY		RATE ELEMENTS	Interim	Zone	BCS	USOC	RATES ($)					Svc Order Submitted Elec per LSR	Svc Order Submitted Manually per LSR	Incremental Charge - Manual Svc Order vs. Electronic-1st	Incremental Charge - Manual Svc Order vs. Electronic-Add'l	Incremental Charge - Manual Svc Order vs. Electronic-Disc 1st	Incremental Charge - Manual Svc Order vs. Electronic-Disc Add'l
							Rec	Nonrecurring		Nonrecurring Disconnect		OSS Rates ($)					
								First	Add'l	First	Add'l	SOMEC	SOMAN	SOMAN	SOMAN	SOMAN	SOMAN
		Each Additional DS1 COCI in the same 3/1 channel system combination per month			UNC1X	UC1D1	12.70	6.58	4.72								
		Nonrecurring Currently Combined Network Elements Switch -As-Is Charge			UNC1X	UNCCC		5.59	5.59	6.98	6.98						
	EXTENDED 4-WIRE DS1 LOOP WITH DEDICATED DS1 INTEROFFICE TRANSPORT w/ 3/1 MUX																
		First 4-wire DS1 Digital Lcoal Loop in Combination - Zone 1		1	UNC1X	USLXX	82.55	252.47	157.54	44.70	11.71						
		First 4-wire DS1 Digital Lcoal Loop in Combination - Zone 2		2	UNC1X	USLXX	154.18	252.47	157.54	44.70	11.71						
		First 4-wire DS1 Digital Lcoal Loop in Combination - Zone 3		3	UNC1X	USLXX	314.52	252.47	157.54	44.70	11.71						
		First Interoffice Transport - Dedicated - DS1 combination - Per Mile Per Month			UNC1X	1L5XX	0.18										
		First Interoffice Transport - Dedicated - DS1 combination - Facility Termination Per Month			UNC1X	U1TF1	60.16	89.27	81.81	16.35	14.44						
		3/1 Channel System in combination per month			UNC3X	MQ3	166.13	178.14	93.97	33.26	31.83						
		Per each DS1 COCI combination per month			UNC1X	UC1D1	12.70	6.58	4.72								
		Each Additional DS1 Interoffice Channel per mile in same 3/1 Channel System per month			UNC1X	1L5XX	0.18										
		Each Additional DS1 Interoffice Channel Facility Termination in same 3/1 Channel System per month			UNC1X	U1TF1	60.16	89.27	81.81	16.35	14.44						
		Each Additional DS1 COCI in the same 3/1 channel system combination per month			UNC1X	UC1D1	12.70	6.58	4.72								
		Additional 4-Wire DS1 Digital Local Loop in Combination - Zone 1		1	UNC1X	USLXX	82.55	252.47	157.54	44.70	11.71						
		Additional 4-Wire DS1 Digital Local Loop in Combination - Zone 2		2	UNC1X	USLXX	154.18	252.47	157.54	44.70	11.71						
		Additional 4-Wire DS1 Digital Local Loop in Combination - Zone 3		3	UNC1X	USLXX	314.52	252.47	157.54	44.70	11.71						
		Nonrecurring Currently Combined Network Elements Switch -As-Is Charge			UNC1X	UNCCC		5.59	5.59	6.98	6.98						
	EXTENDED 4-WIRE 56 KBPS DIGITAL EXTENDED LOOP WITH DS0 INTEROFFICE TRANSPORT																
		First 4-wire 56 kbps Local Loop in combination - Zone 1		1	UNCDX	UDL56	26.09	126.27	88.80	59.14	14.50						
		First 4-wire 56 kbps Local Loop in combination - Zone 2		2	UNCDX	UDL56	35.95	126.27	88.80	59.14	14.50						
		First 4-wire 56 kbps Local Loop in combination - Zone 3		3	UNCDX	UDL56	37.88	126.27	88.80	59.14	14.50						
		First 4-wiree 56 kbps Interoffice Transport - Dedicated - Per Mile per month			UNCDX	1L5XX	0.008838										
		First 4-wire 56 kbps Interoffice Transport - Dedicated - Facility Termination per month			UNCDX	U1TD5	15.12	40.54	27.41	16.74	6.90						
		Nonrecurring Currently Combined Network Elements Switch -As-Is Charge			UNCDX	UNCCC		5.59	5.59	6.98	6.98						
	EXTENDED 4-WIRE 64 KBPS DIGITAL EXTENDED LOOP WITH DS0 INTEROFFICE TRANSPORT																
		First 4-wire 64 kbps Local Loop in combination - Zone 1		1	UNCDX	UDL64	26.09	126.27	88.80	59.14	14.50						
		First 4-wire 64 kbps Local Loop in combination - Zone 2		2	UNCDX	UDL64	35.95	126.27	88.80	59.14	14.50						
		First 4-wire 64 kbps Local Loop in combination - Zone 3		3	UNCDX	UDL64	37.88	126.27	88.80	59.14	14.50						
		First l4-wire 65 kbps Interoffice Transport - Dedicated - Per Mile per month			UNCDX	1L5XX	0.008838										
		First 4-wire 64 kbps Interoffice Transport - Dedicated - Facility Termination per month			UNCDX	U1TD6	15.12	40.54	27.41	16.74	6.90						
		Nonrecurring Currently Combined Network Elements Switch -As-Is Charge			UNCDX	UNCCC		5.59	5.59	6.98	6.98						
ADDITIONAL NETWORK ELEMENTS																	
	When used as a part of a currently combined facility, the non-recurrng charges do not apply, but a Switch As Is charge does apply.																
	When used as ordinarily combined network elements in All States, the non-recurring charges apply and the Switch As Is Charge does not.																
	Nonrecurring Currently Combined Network Elements "Switch As Is" Charge (One applies to each combination)																
		Nonrecurring Currently Combined Network Elements Switch -As-Is Charge - 2 wire/4-Wire VG			UNCVX	UNCCC		5.59	5.59	6.98	6.98						
		Nonrecurring Currently Combined Network Elements Switch -As-Is Charge - 56/64 kbps			UNCDX	UNCCC		5.59	5.59	6.98	6.98						
	MULTIPLEXERS																
		OCU-DP COCI (data) - DS1 to DS0 Channel System - per month (2.4-64kbs) used for a Local Loop			UDL	1D1DD	1.12	6.58	4.72	0.00	0.00						

UNBUNDLED NETWORK ELEMENTS - Alabama														Attachment: 2		Exhibit: A	
CATEGORY		RATE ELEMENTS	Interim	Zone	BCS	USOC	RATES ($)					Svc Order Submitted Elec per LSR	Svc Order Submitted Manually per LSR	Incremental Charge - Manual Svc Order vs. Electronic-1st	Incremental Charge - Manual Svc Order vs. Electronic-Add'l	Incremental Charge - Manual Svc Order vs. Electronic-Disc 1st	Incremental Charge - Manual Svc Order vs. Electronic-Disc Add'l
							Rec	Nonrecurring		Nonrecurring Disconnect		OSS Rates ($)					
								First	Add'l	First	Add'l	SOMEC	SOMAN	SOMAN	SOMAN	SOMAN	SOMAN
		OCU-DP COCI (data) - DS1 to DS0 Channel System - per month (2.4-64kbs) used for connection to a channelized DS1 Local Channel in the same SWC as collocation			U1TUD	1D1DD	1.12	6.58	4.72	0.00	0.00						
		2-wire ISDN COCI (BRITE) - DS1 to DS0 Channel Systsem - per month for a Local Loop			UDN	UC1CA	2.41	6.58	4.72	0.00	0.00						
		2-wire ISDN COCI (BRITE) - DS1 to DS0 Channel Systsem - per month used for connection to a channelized DS1 Local Channel in the same SWC as collocation			U1TUB	UC1CA	2.41	6.58	4.72	0.00	0.00						
		Voice Grade COCI - DS1 to DS0 Channel System - per month used for a Local Loop			UEA	1D1VG	0.53	6.58	4.72	0.00	0.00						
		Voice Grade COCI - DS1 to DS0 Channel System - per month used for connection to a channelized DS1 Local Channel in the same SWC as collocation			U1TUC	1D1VG	0.53	6.58	4.72	0.00	0.00						
		DS1 COCI (used for connection to a channelized DS1 Local Channel in the same SWC as collocation) per month			U1TUA	UC1D1	12.70	6.58	4.72	0.00	0.00						
		DS3 Interface Unit (DS1 COCI) used with Local Channel per month			ULDD1	UC1D1	12.70	6.58	4.72	0.00	0.00						

UNBUNDLED NETWORK ELEMENTS - Florida														Attachment: 2		Exhibit: A	
CATEGORY		RATE ELEMENTS	Interim	Zone	BCS	USOC	RATES ($)					Svc Order Submitted Elec per LSR	Svc Order Submitted Manually per LSR	Incremental Charge - Manual Svc Order vs. Electronic-1st	Incremental Charge - Manual Svc Order vs. Electronic-Add'l	Incremental Charge - Manual Svc Order vs. Electronic-Disc 1st	Incremental Charge - Manual Svc Order vs. Electronic-Disc Add'l
							Rec	Nonrecurring		Nonrecurring Disconnect		OSS Rates ($)					
								First	Add'l	First	Add'l	SOMEC	SOMAN	SOMAN	SOMAN	SOMAN	SOMAN
	The "Zone" shown in the sections for stand-alone loops or loops as part of a combination refers to Geographically Deaveraged UNE Zones. To view Geographically Deaveraged UNE Zone Designations by Central Office, refer to internet Website: http://www.interconnection.bellsouth.com/become_a_clec/html/interconnection.htm																
OPERATIONAL SUPPORT SYSTEMS (OSS) - "REGIONAL RATES"																	
	NOTE: (1) CLEC should contact its contract negotiator if it prefers the "state specific" OSS charges as ordered by the State Commissions. The OSS charges currently contained in this rate exhibit are the BellSouth "regional" service ordering charges. CLEC may elect either the state specific Commission ordered rates for the service ordering charges, or CLEC may elect the regional service ordering charge, however, CLEC can not obtain a mixture of the two regardless if CLEC has a interconnection contract established in each of the 9 states.																
	NOTE: (2) Any element that can be ordered electronically will be billed according to the SOMEC rate listed in this category. Please refer to BellSouth's Local Ordering Handbook (LOH) to determine if a product can be ordered electronically. For those elements that cannot be ordered electronically at present per the LOH, the listed SOMEC rate in this category reflects the charge that would be billed to a CLEC once electronic ordering capabilities come on-line for that element. Otherwise, the manual ordering charge, SOMAN, will be applied to a CLECs bill when it submits an LSR to BellSouth.																
		OSS - Electronic Service Order Charge, Per Local Service Request (LSR) - UNE Only				SOMEC		3.50	0.00	3.50	0.00						
		OSS - Manual Service Order Charge, Per Local Service Request (LSR) - UNE Only				SOMAN		11.90	0.00	1.83	0.00						
UNE SERVICE DATE ADVANCEMENT CHARGE																	
	NOTE: The Expedite charge will be maintained commensurate with BellSouth's FCC No.1 Tariff, Section 5 as applicable.																
		UNE Expedite Charge per Circuit or Line Assignable USOC, per Day			UAL, UEANL, UCL, UEF, UDF, UEQ, UDL, UENTW, UDN, UEA, UHL, ULC, USL, U1T12, U1T48, U1TD1, U1TD3, U1TDX, U1TO3, U1TS1, U1TVX, UC1BC, UC1BL, UC1CC, UC1CL, UC1DC, UC1DL, UC1EC, UC1EL, UC1FC, UC1FL, UC1GC, UC1GL, UC1HC, UC1HL, UDL12, UDL48, UDLO3, UDLSX, UE3, ULD12, ULD48, ULDD1, ULDD3, ULDDX, ULDO3, ULDS1, ULDVX, UNC1X, UNC3X, UNCDX, UNCNX, UNCSX, UNCVX, UNLD1, UNLD3, UXTD1, UXTD3, UXTS1, U1TUC, U1TUD, U1TUB, U1TUA	SDASP		200.00									
UNBUNDLED EXCHANGE ACCESS LOOP																	
	2-WIRE ANALOG VOICE GRADE LOOP																
		2-Wire Analog Voice Grade Loop - Service Level 1- Zone 1		1	UEANL	UEAL2	10.69	49.57	22.83	25.62	6.57						
		2-Wire Analog Voice Grade Loop - Service Level 1- Zone 2		2	UEANL	UEAL2	15.20	49.57	22.83	25.62	6.57						
		2-Wire Analog Voice Grade Loop - Service Level 1- Zone 3		3	UEANL	UEAL2	26.97	49.57	22.83	25.62	6.57						
		2-Wire Analog Voice Grade Loop - Service Level 1- Zone 1		1	UEANL	UEASL	10.69	49.57	22.83	25.62	6.57						
		2-Wire Analog Voice Grade Loop - Service Level 1- Zone 2		2	UEANL	UEASL	15.20	49.57	22.83	25.62	6.57						
		2-Wire Analog Voice Grade Loop - Service Level 1- Zone 3		3	UEANL	UEASL	26.97	49.57	22.83	25.62	6.57						
		Unbundled Miscellaneous Rate Element, Tag Loop at End User Premise			UEANL	URETL		8.33	0.83								
		Loop Testing - Basic 1st Half Hour			UEANL	URET1		48.65	48.65								
		Loop Testing - Basic Additional Half Hour			UEANL	URETA		23.95	23.95								

UNBUNDLED NETWORK ELEMENTS - Florida													Attachment: 2		Exhibit: A	
CATEGORY	RATE ELEMENTS	Interim	Zone	BCS	USOC	RATES ($)					Svc Order Submitted Elec per LSR	Svc Order Submitted Manually per LSR	Incremental Charge - Manual Svc Order vs. Electronic-1st	Incremental Charge - Manual Svc Order vs. Electronic-Add'l	Incremental Charge - Manual Svc Order vs. Electronic-Disc 1st	Incremental Charge - Manual Svc Order vs. Electronic-Disc Add'l
						Rec	Nonrecurring		Nonrecurring Disconnect		OSS Rates ($)					
							First	Add'l	First	Add'l	SOMEC	SOMAN	SOMAN	SOMAN	SOMAN	SOMAN
	CLEC to CLEC Conversion Charge Without Outside Dispatch (UVL-SL1)			UEANL	UREWO		15.78	8.94								
	Unbundled Voice Loop, Non-Design Voice Loop, billing for BST providing make-up (Engineering Information - E.I.)			UEANL	UEANM		13.49									
	Manual Order Coordination for UVL-SL1s (per loop)			UEANL	UEAMC		9.00	9.00								
	Order Coordination for Specified Conversion Time for UVL-SL1 (per LSR)			UEANL	OCOSL		23.02									
2-WIRE Unbundled COPPER LOOP																
	2-Wire Unbundled Copper Loop - Non-Designed Zone 1		1	UEQ	UEQ2X	7.69	44.98	20.90	24.88	6.45						
	2 Wire Unbundled Copper Loop - Non-Designed - Zone 2		2	UEQ	UEQ2X	10.92	44.98	20.90	24.88	6.45						
	2 Wire Unbundled Copper Loop - Non-Designed - Zone 3		3	UEQ	UEQ2X	19.38	44.98	20.90	24.88	6.45						
	Unbundled Miscellaneous Rate Element, Tag Loop at End User Premise			UEQ	URETL		8.33	0.83								
	Manual Order Coordination 2 Wire Unbundled Copper Loop - Non-Designed (per loop)			UEQ	USBMC		9.00									
	Unbundled Copper Loop, Non-Design Cooper Loop, billing for BST providing make-up (Engineering Information - E.I.)			UEQ	UEQMU		13.49									
	Loop Testing - Basic 1st Half Hour			UEQ	URET1		48.65	48.65								
	Loop Testing - Basic Additional Half Hour			UEQ	URETA		23.95	23.95								
	CLEC to CLEC Conversion Charge Without Outside Dispatch (UCL-ND)			UEQ	UREWO		14.27	7.43								
UNBUNDLED EXCHANGE ACCESS LOOP																
2-WIRE ANALOG VOICE GRADE LOOP																
	2-Wire Analog Voice Grade Loop - Service Level 2 w/Loop or Ground Start Signaling - Zone 1		1	UEA	UEAL2	12.24	135.75	82.47	63.53	12.01						
	2-Wire Analog Voice Grade Loop - Service Level 2 w/Loop or Ground Start Signaling - Zone 2		2	UEA	UEAL2	17.40	135.75	82.47	63.53	12.01						
	2-Wire Analog Voice Grade Loop - Service Level 2 w/Loop or Ground Start Signaling - Zone 3		3	UEA	UEAL2	30.87	135.75	82.47	63.53	12.01						
	Order Coordination for Specified Conversion Time (per LSR)			UEA	OCOSL		23.02									
	2-Wire Analog Voice Grade Loop - Service Level 2 w/Reverse Battery Signaling - Zone 1		1	UEA	UEAR2	12.24	135.75	82.47	63.53	12.01						
	2-Wire Analog Voice Grade Loop - Service Level 2 w/Reverse Battery Signaling - Zone 2		2	UEA	UEAR2	17.40	135.75	82.47	63.53	12.01						
	2-Wire Analog Voice Grade Loop - Service Level 2 w/Reverse Battery Signaling - Zone 3		3	UEA	UEAR2	30.87	135.75	82.47	63.53	12.01						
	Order Coordination for Specified Conversion Time (per LSR)			UEA	OCOSL		23.02									
	CLEC to CLEC Conversion Charge without outside dispatch			UEA	UREWO		87.71	36.35								
	Loop Tagging - Service Level 2 (SL2)			UEA	URETL		11.21	1.10								
4-WIRE ANALOG VOICE GRADE LOOP																
	4-Wire Analog Voice Grade Loop - Zone 1		1	UEA	UEAL4	18.89	167.86	115.15	67.08	15.56						
	4-Wire Analog Voice Grade Loop - Zone 2		2	UEA	UEAL4	26.84	167.86	115.15	67.08	15.56						
	4-Wire Analog Voice Grade Loop - Zone 3		3	UEA	UEAL4	47.62	167.86	115.15	67.08	15.56						
	Order Coordination for Specified Conversion Time (per LSR)			UEA	OCOSL		23.02									
	CLEC to CLEC Conversion Charge without outside dispatch			UEA	UREWO		87.71	36.35								
2-WIRE ISDN DIGITAL GRADE LOOP																
	2-Wire ISDN Digital Grade Loop - Zone 1		1	UDN	U1L2X	19.28	147.69	94.41	62.23	10.71						
	2-Wire ISDN Digital Grade Loop - Zone 2		2	UDN	U1L2X	27.40	147.69	94.41	62.23	10.71						
	2-Wire ISDN Digital Grade Loop - Zone 3		3	UDN	U1L2X	48.62	147.69	94.41	62.23	10.71						
	Order Coordination For Specified Conversion Time (per LSR)			UDN	OCOSL		23.02									
	CLEC to CLEC Conversion Charge without outside dispatch			UDN	UREWO		91.61	44.15								
2-WIRE ASYMMETRICAL DIGITAL SUBSCRIBER LINE (ADSL) COMPATIBLE LOOP																
	2 Wire Unbundled ADSL Loop including manual service inquiry & facility reservation - Zone 1		1	UAL	UAL2X	8.30	149.53	103.85	75.05	15.63						
	2 Wire Unbundled ADSL Loop including manual service inquiry & facility reservation - Zone 2		2	UAL	UAL2X	11.80	149.53	103.85	75.05	15.63						
	2 Wire Unbundled ADSL Loop including manual service inquiry & facility reservation - Zone 3		3	UAL	UAL2X	20.94	149.53	103.85	75.05	15.63						
	Order Coordination for Specified Conversion Time (per LSR)			UAL	OCOSL		23.02									

UNBUNDLED NETWORK ELEMENTS - Florida														Attachment: 2		Exhibit: A	
CATEGORY		RATE ELEMENTS	Interim	Zone	BCS	USOC	RATES ($)					Svc Order Submitted Elec per LSR	Svc Order Submitted Manually per LSR	Incremental Charge - Manual Svc Order vs. Electronic-1st	Incremental Charge - Manual Svc Order vs. Electronic-Add'l	Incremental Charge - Manual Svc Order vs. Electronic-Disc 1st	Incremental Charge - Manual Svc Order vs. Electronic-Disc Add'l
							Rec	Nonrecurring		Nonrecurring Disconnect		OSS Rates ($)					
								First	Add'l	First	Add'l	SOMEC	SOMAN	SOMAN	SOMAN	SOMAN	SOMAN
		2 Wire Unbundled ADSL Loop without manual service inquiry & facility reservaton - Zone 1		1	UAL	UAL2W	8.30	124.83	71.12	60.64	9.12						
		2 Wire Unbundled ADSL Loop without manual service inquiry & facility reservaton - Zone 2		2	UAL	UAL2W	11.80	124.83	71.12	60.64	9.12						
		2 Wire Unbundled ADSL Loop without manual service inquiry & facility reservaton - Zone 3		3	UAL	UAL2W	20.94	124.83	71.12	60.64	9.12						
		Order Coordination for Specified Conversion Time (per LSR)			UAL	OCOSL		23.02									
		CLEC to CLEC Conversion Charge without outside dispatch			UAL	UREWO		86.19	40.39								
	2-WIRE HIGH BIT RATE DIGITAL SUBSCRIBER LINE (HDSL) COMPATIBLE LOOP																
		2 Wire Unbundled HDSL Loop including manual service inquiry & facility reservation - Zone 1		1	UHL	UHL2X	7.22	159.09	113.41	75.05	15.63						
		2 Wire Unbundled HDSL Loop including manual service inquiry & facility reservation - Zone 2		2	UHL	UHL2X	10.26	159.09	113.41	75.05	15.63						
		2 Wire Unbundled HDSL Loop including manual service inquiry & facility reservation - Zone 3		3	UHL	UHL2X	18.21	159.09	113.41	75.05	15.63						
		Order Coordination for Specified Conversion Time (per LSR)			UHL	OCOSL		23.02									
		2 Wire Unbundled HDSL Loop without manual service inquiry and facility reservation - Zone 1		1	UHL	UHL2W	7.22	134.40	80.69	60.64	9.12						
		2 Wire Unbundled HDSL Loop without manual service inquiry and facility reservation - Zone 2		2	UHL	UHL2W	10.26	134.40	80.69	60.64	9.12						
		2 Wire Unbundled HDSL Loop without manual service inquiry and facility reservation - Zone 3		3	UHL	UHL2W	18.21	134.40	80.69	60.64	9.12						
		Order Coordination for Specified Conversion Time (per LSR)			UHL	OCOSL		23.02									
		CLEC to CLEC Conversion Charge without outside dispatch			UHL	UREWO		86.12	40.39								
	4-WIRE HIGH BIT RATE DIGITAL SUBSCRIBER LINE (HDSL) COMPATIBLE LOOP																
		4 Wire Unbundled HDSL Loop including manual service inquiry and facility reservation - Zone 1		1	UHL	UHL4X	10.86	193.31	138.98	77.15	12.61						
		4-Wire Unbundled HDSL Loop including manual service inquiry and facility reservation - Zone 2		2	UHL	UHL4X	15.44	193.31	138.98	77.15	12.61						
		4-Wire Unbundled HDSL Loop including manual service inquiry and facility reservation - Zone 3		3	UHL	UHL4X	27.39	193.31	138.98	77.15	12.61						
		Order Coordination for Specified Conversion Time (per LSR)			UHL	OCOSL		23.02									
		4-Wire Unbundled HDSL Loop without manual service inquiry and facility reservation - Zone 1		1	UHL	UHL4W	10.86	168.62	115.47	62.74	11.22						
		4-Wire Unbundled HDSL Loop without manual service inquiry and facility reservation - Zone 2		2	UHL	UHL4W	15.44	168.62	115.47	62.74	11.22						
		4-Wire Unbundled HDSL Loop without manual service inquiry and facility reservation - Zone 3		3	UHL	UHL4W	27.39	168.62	115.47	62.74	11.22						
		Order Coordination for Specified Conversion Time (per LSR)			UHL	OCOSL		23.02									
		CLEC to CLEC Conversion Charge without outside dispatch			UHL	UREWO		86.12	40.39								
	4-WIRE DS1 DIGITAL LOOP																
		4-Wire DS1 Digital Loop - Zone 1		1	USL	USLXX	70.74	313.75	181.48	61.22	13.53						
		4-Wire DS1 Digital Loop - Zone 2		2	USL, NTCD1	USLXX	100.54	313.75	181.48	61.22	13.53						
		4-Wire DS1 Digital Loop - Zone 3		3	USL, NTCD1	USLXX	178.39	313.75	181.48	61.22	13.53						
		Order Coordination for Specified Conversion Time (per LSR)			USL, NTCD1	OCOSL		23.02									
		CLEC to CLEC Conversion Charge without outside dispatch			USL, NTCD1	UREWO		101.07	43.04								
	4-WIRE 19.2, 56 OR 64 KBPS DIGITAL GRADE LOOP																
		4 Wire Unbundled Digital 19.2 Kbps		1	UDL	UDL19	22.20	161.56	108.85	67.08	15.56						
		4 Wire Unbundled Digital 19.2 Kbps		2	UDL	UDL19	31.56	161.56	108.85	67.08	15.56						
		4 Wire Unbundled Digital 19.2 Kbps		3	UDL	UDL19	55.99	161.56	108.85	67.08	15.56						
		4 Wire Unbundled Digital Loop 56 Kbps - Zone 1		1	UDL	UDL56	22.20	161.56	108.85	67.08	15.56						
		4 Wire Unbundled Digital Loop 56 Kbps - Zone 2		2	UDL	UDL56	31.56	161.56	108.85	67.08	15.56						
		4 Wire Unbundled Digital Loop 56 Kbps - Zone 3		3	UDL	UDL56	55.99	161.56	108.85	67.08	15.56						
		Order Coordination for Specified Conversion Time (per LSR)			UDL	OCOSL		23.02									
		4 Wire Unbundled Digital Loop 64 Kbps - Zone 1		1	UDL	UDL64	22.20	161.56	108.85	67.08	15.56						
		4 Wire Unbundled Digital Loop 64 Kbps - Zone 2		2	UDL	UDL64	31.56	161.56	108.85	67.08	15.56						
		4 Wire Unbundled Digital Loop 64 Kbps - Zone 3		3	UDL	UDL64	55.99	161.56	108.85	67.08	15.56						
		Order Coordination for Specified Conversion Time (per LSR)			UDL	OCOSL		23.02									
		CLEC to CLEC Conversion Charge without outside dispatch			UDL	UREWO		102.11	49.74								

UNBUNDLED NETWORK ELEMENTS - Florida														Attachment: 2		Exhibit: A	
CATEGORY		RATE ELEMENTS	Interim	Zone	BCS	USOC	RATES ($)					Svc Order Submitted Elec per LSR	Svc Order Submitted Manually per LSR	Incremental Charge - Manual Svc Order vs. Electronic-1st	Incremental Charge - Manual Svc Order vs. Electronic-Add'l	Incremental Charge - Manual Svc Order vs. Electronic-Disc 1st	Incremental Charge - Manual Svc Order vs. Electronic-Disc Add'l
							Rec	Nonrecurring		Nonrecurring Disconnect		OSS Rates ($)					
								First	Add'l	First	Add'l	SOMEC	SOMAN	SOMAN	SOMAN	SOMAN	SOMAN
	2-WIRE Unbundled COPPER LOOP																
		2-Wire Unbundled Copper Loop-Designed including manual service inquiry & facility reservation - Zone 1		1	UCL	UCLPB	8.30	148.50	102.82	75.05	15.63						
		2-Wire Unbundled Copper Loop-Designed including manual service inquiry & facility reservation - Zone 2		2	UCL	UCLPB	11.80	148.50	102.82	75.05	15.63						
		2 Wire Unbundled Copper Loop-Designed including manual service inquiry & facility reservation - Zone 3		3	UCL	UCLPB	20.94	148.50	102.82	75.05	15.63						
		Order Coordination for Unbundled Copper Loops (per loop)			UCL	UCLMC		9.00	9.00								
		2-Wire Unbundled Copper Loop-Designed without manual service inquiry and facility reservation - Zone 1		1	UCL	UCLPW	8.30	123.81	70.09	60.64	9.12						
		2-Wire Unbundled Copper Loop-Designed without manual service inquiry and facility reservation - Zone 2		2	UCL	UCLPW	11.80	123.81	70.09	60.64	9.12						
		2-Wire Unbundled Copper Loop-Designed without manual service inquiry and facility reservation - Zone 3		3	UCL	UCLPW	20.94	123.81	70.09	60.64	9.12						
		Order Coordination for Unbundled Copper Loops (per loop)			UCL	UCLMC		9.00	9.00								
		CLEC to CLEC Conversion Charge without outside dispatch (UCL -Des)			UCL	UREWO		97.21	42.47								
	4-WIRE COPPER LOOP																
		4-Wire Copper Loop-Designed including manual service inquiry and facility reservation - Zone 1		1	UCL	UCL4S	11.83	177.87	132.76	77.15	17.73						
		4-Wire Copper Loop-Designed including manual service inquiry and facility reservation - Zone 2		2	UCL	UCL4S	16.81	177.87	132.76	77.15	17.73						
		4-Wire Copper Loop-Designed including manual service inquiry and facility reservation - Zone 3		3	UCL	UCL4S	29.82	177.87	132.76	77.15	17.73						
		Order Coordination for Unbundled Copper Loops (per loop)			UCL	UCLMC		9.00	9.00								
		4-Wire Copper Loop-Designed without manual service inquiry and facility reservation - Zone 1		1	UCL	UCL4W	11.83	153.18	100.03	62.74	11.22						
		4-Wire Copper Loop-Designed without manual service inquiry and facility reservation - Zone 2		2	UCL	UCL4W	16.81	153.18	100.03	62.74	11.22						
		4-Wire Copper Loop-Designed without manual service inquiry and facility reservation - Zone 3		3	UCL	UCL4W	29.82	153.18	100.03	62.74	11.22						
		Order Coordination for Unbundled Copper Loops (per loop)			UCL	UCLMC		9.00	9.00								
		CLEC to CLEC Conversion Charge without outside dispatch			UCL	UREWO		97.21	42.47								
LOOP MODIFICATION																	
		Unbundled Loop Modification, Removal of Load Coils - 2 Wire pair less than or equal to 18k ft, per Unbundled Loop			UAL, UHL, UCL, UEQ, ULS, UEA, UEANL, UEPSR, UEPSB	ULM2L		0.00	0.00								
		Unbundled Loop Modification Removal of Load Coils - 4 Wire less than or equal to 18K ft, per Unbundled Loop			UHL, UCL, UEA	ULM4L		0.00	0.00								
		Unbundled Loop Modification Removal of Bridged Tap Removal, per unbundled loop			UAL, UHL, UCL, UEQ, ULS, UEA, UEANL, UEPSR, UEPSB	ULMBT		10.52	10.52								
SUB-LOOPS																	
	Sub-Loop Distribution																
		Sub-Loop - Per Cross Box Location - CLEC Feeder Facility Set-Up	I		UEANL	USBSA		487.23									
		Sub-Loop - Per Cross Box Location - Per 25 Pair Panel Set-Up	I		UEANL	USBSB		6.25									
		Sub-Loop - Per Building Equipment Room - CLEC Feeder Facility Set-Up	I		UEANL	USBSC		169.25									
		Sub-Loop - Per Building Equipment Room - Per 25 Pair Panel Set-Up	I		UEANL	USBSD		38.65									
		Sub-Loop Distribution Per 2-Wire Analog Voice Grade Loop - Zone 1		1	UEANL	USBN2	6.46	60.19	21.78	47.50	5.26						
		Sub-Loop Distribution Per 2-Wire Analog Voice Grade Loop - Zone 2		2	UEANL	USBN2	9.18	60.19	21.78	47.50	5.26						

UNBUNDLED NETWORK ELEMENTS - Florida														Attachment: 2		Exhibit: A	
CATEGORY		RATE ELEMENTS	Interim	Zone	BCS	USOC	RATES ($)					Svc Order Submitted Elec per LSR	Svc Order Submitted Manually per LSR	Incremental Charge - Manual Svc Order vs. Electronic-1st	Incremental Charge - Manual Svc Order vs. Electronic-Add'l	Incremental Charge - Manual Svc Order vs. Electronic-Disc 1st	Incremental Charge - Manual Svc Order vs. Electronic-Disc Add'l
							Rec	Nonrecurring		Nonrecurring Disconnect		OSS Rates ($)					
								First	Add'l	First	Add'l	SOMEC	SOMAN	SOMAN	SOMAN	SOMAN	SOMAN
		Sub-Loop Distribution Per 2-Wire Analog Voice Grade Loop - Zone 3		3	UEANL	USBN2	16.29	60.19	21.78	47.50	5.26						
		Order Coordination for Unbundled Sub-Loops, per sub-loop pair			UEANL	USBMC		9.00	9.00								
		Sub-Loop Distribution Per 4-Wire Analog Voice Grade Loop - Zone 1		1	UEANL	USBN4	7.37	68.83	30.42	49.71	6.60						
		Sub-Loop Distribution Per 4-Wire Analog Voice Grade Loop - Zone 2		2	UEANL	USBN4	10.47	68.83	30.42	49.71	6.60						
		Sub-Loop Distribution Per 4-Wire Analog Voice Grade Loop - Zone 3		3	UEANL	USBN4	18.58	68.83	30.42	49.71	6.60						
		Order Coordination for Unbundled Sub-Loops, per sub-loop pair			UEANL	USBMC		9.00	9.00								
		Sub-Loop 2-Wire Intrabuilding Network Cable (INC)	I		UEANL	USBR2	3.96	51.84	13.44	47.50	5.26						
		Order Coordination for Unbundled Sub-Loops, per sub-loop pair			UEANL	USBMC		9.00	9.00								
		Sub-Loop 4-Wire Intrabuilding Network Cable (INC)	I		UEANL	USBR4	9.37	55.91	17.51	49.71	6.60						
		Order Coordination for Unbundled Sub-Loops, per sub-loop pair			UEANL	USBMC		9.00	9.00								
		Loop Testing - Basic 1st Half Hour			UEANL	URET1		48.65	48.65								
		Loop Testing - Basic Additional Half Hour			UEANL	URETA		23.95	23.95								
		2 Wire Copper Unbundled Sub-Loop Distribution - Zone 1	I	1	UEF	UCS2X	5.15	60.19	21.78	47.50	5.26						
		2 Wire Copper Unbundled Sub-Loop Distribution - Zone 2	I	2	UEF	UCS2X	7.31	60.19	21.78	47.50	5.26						
		2 Wire Copper Unbundled Sub-Loop Distribution - Zone 3	I	3	UEF	UCS2X	12.98	60.19	21.78	47.50	5.26						
		Order Coordination for Unbundled Sub-Loops, per sub-loop pair			UEF	USBMC		9.00	9.00								
		4 Wire Copper Unbundled Sub-Loop Distribution - Zone 1	I	1	UEF	UCS4X	5.36	68.83	30.42	49.71	6.60						
		4 Wire Copper Unbundled Sub-Loop Distribution - Zone 2	I	2	UEF	UCS4X	7.61	68.83	30.42	49.71	6.60						
		4 Wire Copper Unbundled Sub-Loop Distribution - Zone 3	I	3	UEF	UCS4X	13.51	68.83	30.42	49.71	6.60						
		Order Coordination for Unbundled Sub-Loops, per sub-loop pair			UEF	USBMC		9.00	9.00								
		Loop Testing - Basic 1st Half Hour			UEF	URET1		48.65	48.65								
		Loop Testing - Basic Additional Half Hour			UEF	URETA		23.95	23.95								
	Unbundled Network Terminating Wire (UNTW)																
		Unbundled Network Terminating Wire (UNTW) per Pair			UENTW	UENPP	0.4572	18.02									
	Network Interface Device (NID)																
		Network Interface Device (NID) - 1-2 lines			UENTW	UND12		71.49	48.87								
		Network Interface Device (NID) - 1-6 lines			UENTW	UND16		113.89	89.07								
		Network Interface Device Cross Connect - 2 W			UENTW	UNDC2		7.63	7.63								
		Network Interface Device Cross Connect - 4W			UENTW	UNDC4		7.63	7.63								
UNE OTHER, PROVISIONING ONLY - NO RATE																	
		NID - Dispatch and Service Order for NID installation			UENTW	UNDBX	0.00	0.00									
		UNTW Circuit Id Establishment, Provisioning Only - No Rate			UENTW	UENCE	0.00	0.00									
		Unbundled Contract Name, Provisioning Only - No Rate			UEANL,UEF,UEQ,UENTW	UNECN	0.00	0.00									
HIGH CAPACITY UNBUNDLED LOCAL LOOP																	
		High Capacity Unbundled Local Loop - DS3 - Per Mile per month			UE3	1L5ND	10.92										
		High Capacity Unbundled Local Loop - DS3 - Facility Termination per month			UE3	UE3PX	386.88	556.37	343.01	139.13	96.84						
		High Capacity Unbundled Local Loop - STS-1 - Per Mile per month			UDLSX	1L5ND	10.92										
		High Capacity Unbundled Local Loop - STS-1 - Facility Termination per month			UDLSX	UDLS1	426.60	556.37	343.01	139.13	96.84						
LOOP MAKE-UP																	
		Loop Makeup - Preordering Without Reservation, per working or spare facility queried (Manual).			UMK	UMKLW		52.17	52.17								
		Loop Makeup - Preordering With Reservation, per spare facility queried (Manual).			UMK	UMKLP		55.07	55.07								

UNBUNDLED NETWORK ELEMENTS - Florida														Attachment: 2		Exhibit: A	
CATEGORY		RATE ELEMENTS	Interim	Zone	BCS	USOC	RATES ($)					Svc Order Submitted Elec per LSR	Svc Order Submitted Manually per LSR	Incremental Charge - Manual Svc Order vs. Electronic-1st	Incremental Charge - Manual Svc Order vs. Electronic-Add'l	Incremental Charge - Manual Svc Order vs. Electronic-Disc 1st	Incremental Charge - Manual Svc Order vs. Electronic-Disc Add'l
							Rec	Nonrecurring		Nonrecurring Disconnect		OSS Rates ($)					
								First	Add'l	First	Add'l	SOMEC	SOMAN	SOMAN	SOMAN	SOMAN	SOMAN
		Loop Makeup--With or Without Reservation, per working or spare facility queried (Mechanized)			UMK	UMKMQ		0.6784	0.6784								
LINE SHARING AND LINE SPLITTING																	
	NOTE 1: The Line Sharing monthly recurring rates for all installations completed from October 02, 2003 through midnight October 01, 2004 shall be billed as follows:																
	NOTE 1: 10/02/2003 – 10/01/2004: 25% of the rate for an unbundled copper loop non-designed ("UCLND")																
	NOTE 1: 10/02/2004 – 10/01/2005: 50% of the rate for UCLND																
	NOTE 1: 10/02/2005 – 10/01/2006: 75% of the rate for UCLND																
	NOTE 1: Above will apply to USOCS: ULSDT and ULSCT																
	****NOTE 2: The Line Sharing monthly recurring rates with USOCs ULSDC and ULSCC applies only to circuits installed and inservice on or before October 1, 2003**																
	LINE SHARING																
	SPLITTERS-CENTRAL OFFICE BASED																
		Line Sharing Splitter, per System 96 Line Capacity			ULS	ULSDA	119.72	379.13	0.00	347.90	0.00						
		Line Sharing Splitter, per System 24 Line Capacity			ULS	ULSDB	29.93	379.13	0.00	347.90	0.00						
		Line Sharing Splitter, Per System, 8 Line Capacity			ULS	ULSD8	8.33	379.13	0.00	347.90	0.00						
		Line Sharing-DLEC Owned Splitter in CO-CFA activaton-deactivation (per LSOD)			ULS	ULSDG		173.66	0.00	97.42	0.00						
	END USER ORDERING-CENTRAL OFFICE BASED LINE SHARING																
		Line Sharing - per Line Activation (BST Owned splitter) - OBSOLETE see **NOTE 2			ULS	ULSDC	0.61	29.68	21.28	19.57	9.61						
		Line Share Service, TRO per line activation, BST owned splitter - Central Office Located (50% of UCLND) - please see NOTE 1 (E:10/2/2004)			ULS	ULSDT	3.98	29.68	21.28	19.57	9.61						
		Line Share Service, TRO per line activation, BST owned splitter - Central Office Located (75% of UCLND) - please see NOTE 1 (E:10/2/2005)			ULS	ULSDT	5.97	29.68	21.28	19.57	9.61						
		Line Sharing - per Subsequent Activity per Line Rearrangement - (BST Owned Splitter)			ULS	ULSDS		21.68	16.44								
		Line Sharing - per Subsequent Activity per Line Rearrangement - (DLEC Owned Splitter)			ULS	ULSCS		21.68	16.44								
		Line Sharing - per Line Activation (DLEC owned Splitter) - OBSOLETE see **NOTE 2			ULS	ULSCC	0.61	47.44	19.31	20.67	12.74						
		Line Share Service, TRO per line activation, CLEC owned splitter - Central Office Located (50% of UCLND) - please see NOTE 1 (E:10/2/2004)			ULS	ULSCT	3.98	47.44	19.31	20.67	12.74						
		Line Share Service, TRO per line activation, CLEC owned splitter - Central Office Located (75% of UCLND) - please see NOTE 1 (E:10/2/2005)			ULS	ULSCT	5.97	47.44	19.31	20.67	12.74						
	LINE SPLITTING																
	MAINTENANCE																
		No Trouble Found - per 1/2 hour increments - Basic						80.00	55.00								
		No Trouble Found - per 1/2 hour increments - Overtime						120.00	82.50								
		No Trouble Found - per 1/2 hour increments - Premium						160.00	110.00								
UNBUNDLED DEDICATED TRANSPORT																	
	INTEROFFICE CHANNEL - DEDICATED TRANSPORT																
		Interoffice Channel - Dedicated Transport - 2-Wire Voice Grade - Per Mile per month			U1TVX	1L5XX	0.0091										
		Interoffice Channel - Dedicated Transport- 2- Wire Voice Grade - Facility Termination			U1TVX	U1TV2	25.32	47.35	31.78	18.31	7.03						
		Interoffice Channel - Dedicated Transpor t- 2-Wire Voice Grade Rev Bat. - Per Mile per month			U1TVX	1L5XX	0.0091										
		Interoffice Channel - Dedicated Transport- 2- Wire VG Rev Bat. - Facility Termination			U1TVX	U1TR2	25.32	47.35	31.78	18.31	7.03						
		Interoffice Channel - Dedicated Transport - 4-Wire Voice Grade - Per Mile per month			U1TVX	1L5XX	0.0091										
		Interoffice Channel - Dedicated Transport - 4- Wire Voice Grade - Facility Termination			U1TVX	U1TV4	22.58	47.35	31.78	18.31	7.03						
		Interoffice Channel - Dedicated Transport - 56 kbps - per mile per month			U1TDX	1L5XX	0.0091										

UNBUNDLED NETWORK ELEMENTS - Florida														Attachment: 2		Exhibit: A	
CATEGORY		RATE ELEMENTS	Interim	Zone	BCS	USOC	RATES ($)					Svc Order Submitted Elec per LSR	Svc Order Submitted Manually per LSR	Incremental Charge - Manual Svc Order vs. Electronic-1st	Incremental Charge - Manual Svc Order vs. Electronic-Add'l	Incremental Charge - Manual Svc Order vs. Electronic-Disc 1st	Incremental Charge - Manual Svc Order vs. Electronic-Disc Add'l
							Rec	Nonrecurring		Nonrecurring Disconnect		OSS Rates ($)					
								First	Add'l	First	Add'l	SOMEC	SOMAN	SOMAN	SOMAN	SOMAN	SOMAN
		Interoffice Channel - Dedicated Transport - 56 kbps - Facility Termination			U1TDX	U1TD5	18.44	47.35	31.78	18.31	7.03						
		Interoffice Channel - Dedicated Transport - 64 kbps - per mile per month			U1TDX	1L5XX	0.0091										
		Interoffice Channel - Dedicated Transport - 64 kbps - Facility Termination			U1TDX	U1TD6	18.44	47.35	31.78	18.31	7.03						
		Interoffice Channel - Dedicated Channel - DS1 - Per Mile per month			U1TD1	1L5XX	0.1856										
		Interoffice Channel - Dedicated Tranport - DS1 - Facility Termination			U1TD1	U1TF1	88.44	105.54	98.47	21.47	19.05						
		Interoffice Channel - Dedicated Transport - DS3 - Per Mile per month			U1TD3	1L5XX	3.87										
		Interoffice Channel - Dedicated Transport - DS3 - Facility Termination per month			U1TD3	U1TF3	1,071.00	335.46	219.28	72.03	70.56						
		Interoffice Channel - Dedicated Transport - STS-1 - Per Mile per month			U1TS1	1L5XX	3.87										
		Interoffice Channel - Dedicated Transport - STS-1 - Facility Termination			U1TS1	U1TFS	1,056.00	335.46	219.28	72.03	70.56						
DARK FIBER																	
		Dark Fiber, Four Fiber Strands, Per Route Mile or Fraction Thereof per month - Interoffice Channel			UDF, UDFCX	1L5DF	26.85										
		NRC Dark Fiber - Interoffice Channel			UDF, UDFCX	UDF14		751.34	193.88	356.21	230.11						
		Dark Fiber, Four Fiber Strands, Per Route Mile or Fraction Thereof per month - Local Loop			UDF, UDFCX	1L5DL	55.04										
		NRC Dark Fiber - Local Loop			UDF, UDFCX	UDFL4		751.34	193.88	356.21	230.11						
SIGNALING (CCS7)																	
		CCS7 Signaling Termination, Per STP Port			UDB	PT8SX	135.05										
		CCS7 Signaling Connection, Per link (A link)			UDB	TPP6A	17.93	43.57	43.57	18.31	18.31						
		CCS7 Signaling Connection, Per link (B link) (also known as D link)			UDB	TPP6B	17.93	43.57	43.57	18.31	18.31						
		CCS7 Signaling Connection-A link, per month			UDB	TPP9A	17.93	43.57	43.57	18.31	18.31						
		CCS7 Signaling Connection-B link(also known as D link) per month			UDB	TPP9B	17.93	43.57	43.57	18.31	18.31						
		CCS7 Signaling Usage Surrogate, per link per LATA			UDB	STU56	694.32										
		CCS7 Signaling Point Code, per Originating Point Code Establishment or Change, per STP affected			UDB	CCAPO		46.03	46.03	46.03	46.03						
E911 SERVICE																	
		Local Channel - Dedicated - 2-wr Voice Grade - Zone 1					21.94	265.84	46.97	37.63	4.00						
		Local Channel - Dedicated - 2-wr Voice Grade - Zone 2					29.62	265.84	46.97	37.63	4.00						
		Local Channel - Dedicated - 2-wr Voice Grade - Zone 3					57.22	265.84	46.97	37.63	4.00						
		Interoffice Transport - Dedicated - 2-wr Voice Grade Per Mile					0.0091										
		Interoffice Transport - Dedicated - 2-wr Voice Grade Per Facility Termination					25.32	47.35	31.78	18.31	7.03						
		Local Channel - Dedicated - DS1 - Zone 1					35.28	216.65	183.54	21.47	19.05						
		Local Channel - Dedicated - DS1 - Zone 2					47.63	216.65	183.54	21.47	19.05						
		Local Channel - Dedicated - DS1 - Zone 3					92.01	216.65	183.54	21.47	19.05						
		Interoffice Transport - Dedicated - DS1 Per Mile					0.1856										
		Interoffice Transport - Dedicated - DS1 Per Facility Termination					88.44	105.54	98.47	21.47	19.05						
SELECTIVE ROUTING																	
		Selective Routing Per Unique Line Class Code Per Request Per Switch						93.55	93.55	12.71	12.71						
ENHANCED EXTENDED LINK (EELs)																	
	NOTE: The monthly recurring and non-recurring charges below will apply and the Switch-As-Is Charge will not apply for UNE combinations provisioned as ' Ordinarily Combined' Network Elements.																
	NOTE: The monthly recurring and the Switch-As-Is Charge and not the non-recurring charges below will apply for UNE combinations provisioned as ' Currently Combined' Network Elements.																
	EXTENTED 2-WIRE VOICE GRADE EXTENDED LOOP WITH DEDICATED DS1 INTEROFFICE TRANSPORT																
		First 2-Wire VG Loop (SL2) in Combination - Zone 1		1	UNCVX	UEAL2	12.24	127.59	60.54	42.79	2.81						
		First 2-Wire VG Loop (SL2) in Combination - Zone 2		2	UNCVX	UEAL2	17.40	127.59	60.54	42.79	2.81						
		First 2-Wire VG Loop (SL2) in Combination - Zone 3		3	UNCVX	UEAL2	30.87	127.59	60.54	42.79	2.81						

UNBUNDLED NETWORK ELEMENTS - Florida														Attachment: 2		Exhibit: A	
CATEGORY		RATE ELEMENTS	Interim	Zone	BCS	USOC	RATES ($)					Svc Order Submitted Elec per LSR	Svc Order Submitted Manually per LSR	Incremental Charge - Manual Svc Order vs. Electronic-1st	Incremental Charge - Manual Svc Order vs. Electronic-Add'l	Incremental Charge - Manual Svc Order vs. Electronic-Disc 1st	Incremental Charge - Manual Svc Order vs. Electronic-Disc Add'l
							Rec	Nonrecurring		Nonrecurring Disconnect		OSS Rates ($)					
								First	Add'l	First	Add'l	SOMEC	SOMAN	SOMAN	SOMAN	SOMAN	SOMAN
		Interoffice Transport - Dedicated - DS1 combination - Per Mile per month			UNC1X	1L5XX	0.1856										
		Interoffice Transport - Dedicated - DS1 combination - Facility Termination per month			UNC1X	U1TF1	88.44	174.46	122.46	45.61	17.95						
		1/0 Channelization System in combination Per Month			UNC1X	MQ1	146.77	101.42	71.62								
		Voice Grade COCI - Per Month			UNCVX	1D1VG	1.38	10.07	7.08	0.00	0.00						
		Each Additional 2-Wire VG Loop (SL 2) in Combination - Zone 1		1	UNCVX	UEAL2	12.24	127.59	60.54	42.79	2.81						
		Each Additional 2-Wire VG Loop (SL 2) in Combination - Zone 2		2	UNCVX	UEAL2	17.40	127.59	60.54	42.79	2.81						
		Each Additional 2-Wire VG Loop (SL 2) in Combination - Zone 3		3	UNCVX	UEAL2	30.87	127.59	60.54	42.79	2.81						
		Voice Grade COCI - Per Month			UNCVX	1D1VG	1.38	10.07	7.08	0.00	0.00						
		Nonrecurring Currently Combined Network Elements Switch -As-Is Charge			UNC1X	UNCCC		8.98	8.98	8.98	8.98						
	EXTENDED 4-WIRE VOICE GRADE EXTENDED LOOP WITH DEDICATED DS1 INTEROFFICE TRANSPORT																
		First 4-Wire Analog Voice Grade Loop in Combination - Zone 1		1	UNCVX	UEAL4	18.89	127.59	60.54	42.79	2.81						
		First 4-Wire Analog Voice Grade Loop in Combination - Zone 2		2	UNCVX	UEAL4	26.84	127.59	60.54	42.79	2.81						
		First 4-Wire Analog Voice Grade Loop in Combination - Zone 3		3	UNCVX	UEAL4	47.62	127.59	60.54	42.79	2.81						
		Interoffice Transport - Dedicated - DS1 combination - Per Mile Per Month			UNC1X	1L5XX	0.1856										
		Interoffice Transport - Dedicated - DS1 - Facility Termination Per Month			UNC1X	U1TF1	88.44	174.46	122.46	45.61	17.95						
		1/0 Channel System in combination Per Month			UNC1X	MQ1	146.77	101.42	71.62								
		Voice Grade COCI in combination - per month			UNCVX	1D1VG	1.38	10.07	7.08	0.00	0.00						
		Additional 4-Wire Analog Voice Grade Loop in same DS1 Interoffice Transport Combination - Zone 1		1	UNCVX	UEAL4	18.89	127.59	60.54	42.79	2.81						
		Additional 4-Wire Analog Voice Grade Loop in same DS1 Interoffice Transport Combination - Zone 2		2	UNCVX	UEAL4	26.84	127.59	60.54	42.79	2.81						
		Additional 4-Wire Analog Voice Grade Loop in same DS1 Interoffice Transport Combination - Zone 3		3	UNCVX	UEAL4	47.62	127.59	60.54	42.79	2.81						
		Additional Voice Grade COCI in combination - per month			UNCVX	1D1VG	1.38	10.07	7.08	0.00	0.00						
		Nonrecurring Currently Combined Network Elements Switch -As-Is Charge			UNC1X	UNCCC		8.98	8.98	8.98	8.98						
	EXTENDED 4-WIRE 56 KBPS EXTENDED DIGITAL LOOP WITH DEDICATED DS1 INTEROFFICE TRANSPORT																
		First 4-Wire 56Kbps Digital Grade Loop in Combination - Zone 1		1	UNCDX	UDL56	22.20	127.59	60.54	42.79	2.81						
		First 4-Wire 56Kbps Digital Grade Loop in Combination - Zone 2		2	UNCDX	UDL56	31.56	127.59	60.54	42.79	2.81						
		First 4-Wire 56Kbps Digital Grade Loop in Combination - Zone 3		3	UNCDX	UDL56	55.99	127.59	60.54	42.79	2.81						
		Interoffice Transport - Dedicated - DS1 combination - Per Mile Per Month			UNC1X	1L5XX	0.1856										
		Interoffice Transport - Dedicated - DS1 - combination Facility Termination Per Month			UNC1X	U1TF1	88.44	174.46	122.46	45.61	17.95						
		1/0 Channel System in combination Per Month			UNC1X	MQ1	146.77	101.42	71.62								
		OCU-DP COCI (data) per month (2.4-64kbs)			UNCDX	1D1DD	2.10	10.07	7.08	0.00	0.00						
		Additional 4-Wire 56Kbps Digital Grade Loop in same DS1 Interoffice Transport Combination - Zone 1		1	UNCDX	UDL56	22.20	127.59	60.54	42.79	2.81						
		Additional 4-Wire 56Kbps Digital Grade Loop in same DS1 Interoffice Transport Combination - Zone 2		2	UNCDX	UDL56	31.56	127.59	60.54	42.79	2.81						
		Additional 4-Wire 56Kbps Digital Grade Loop in same DS1 Interoffice Transport Combination - Zone 3		3	UNCDX	UDL56	55.99	127.59	60.54	42.79	2.81						
		Additional OCU-DP COCI (data) - in combination per month (2.4-64kbs)			UNCDX	1D1DD	2.10	10.07	7.08	0.00	0.00						

UNBUNDLED NETWORK ELEMENTS - Florida														Attachment: 2		Exhibit: A	
CATEGORY		RATE ELEMENTS	Interim	Zone	BCS	USOC	RATES ($)					Svc Order Submitted Elec per LSR	Svc Order Submitted Manually per LSR	Incremental Charge - Manual Svc Order vs. Electronic-1st	Incremental Charge - Manual Svc Order vs. Electronic-Add'l	Incremental Charge - Manual Svc Order vs. Electronic-Disc 1st	Incremental Charge - Manual Svc Order vs. Electronic-Disc Add'l
							Rec	Nonrecurring		Nonrecurring Disconnect		OSS Rates ($)					
								First	Add'l	First	Add'l	SOMEC	SOMAN	SOMAN	SOMAN	SOMAN	SOMAN
		Nonrecurring Currently Combined Network Elements Switch -As-Is Charge			UNC1X	UNCCC		8.98	8.98	8.98	8.98						
	EXTENDED 4-WIRE 64 KBPS EXTENDED DIGITAL LOOP WITH DEDICATED DS1 INTEROFFICE TRANSPORT																
		First 4-Wire 64Kbps Digital Grade Loop in Combination - Zone 1		1	UNCDX	UDL64	22.20	127.59	60.54	42.79	2.81						
		First 4-Wire 64Kbps Digital Grade Loop in Combination - Zone 2		2	UNCDX	UDL64	31.56	127.59	60.54	42.79	2.81						
		First 4-Wire 64Kbps Digital Grade Loop in Combination - Zone 3		3	UNCDX	UDL64	55.99	127.59	60.54	42.79	2.81						
		Interoffice Transport - Dedicated - DS1 combination - Per Mile Per Month			UNC1X	1L5XX	0.1856										
		interoffice Transport - Dedicated - DS1 combination - Facility Termination Per Month			UNC1X	U1TF1	88.44	174.46	122.46	45.61	17.95						
		1/0 Channel System in combination Per Month			UNC1X	MQ1	146.77	101.42	71.62								
		OCU-DP COCI (data) - in combination - per month (2.4-64kbs)			UNCDX	1D1DD	2.10	10.07	7.08	0.00	0.00						
		Additional 4-Wire 64Kbps Digital Grade Loop in same DS1 Interoffice Transport Combination - Zone 1		1	UNCDX	UDL64	22.20	127.59	60.54	42.79	2.81						
		Additional 4-Wire 64Kbps Digital Grade Loop in same DS1 Interoffice Transport Combination - Zone 2		2	UNCDX	UDL64	31.56	127.59	60.54	42.79	2.81						
		Additional 4-Wire 64Kbps Digital Grade Loop in same DS1 Interoffice Transport Combination - Zone 3		3	UNCDX	UDL64	55.99	127.59	60.54	42.79	2.81						
		Additional OCU-DP COCI (data) - in combination - per month (2.4-64kbs)			UNCDX	1D1DD	2.10	10.07	7.08	0.00	0.00						
		Nonrecurring Currently Combined Network Elements Switch -As-Is Charge			UNC1X	UNCCC		8.98	8.98	8.98	8.98						
	EXTENDED 4-WIRE DS1 DIGITAL EXTENDED LOOP WITH DEDICATED DS1 INTEROFFICE TRANSPORT																
		4-Wire DS1 Digital Loop in Combination - Zone 1		1	UNC1X	USLXX	70.74	217.75	121.62	51.44	14.45						
		4-Wire DS1 Digital Loop in Combination - Zone 2		2	UNC1X	USLXX	100.54	217.75	121.62	51.44	14.45						
		4-Wire DS1 Digital Loop in Combination - Zone 3		3	UNC1X	USLXX	178.39	217.75	121.62	51.44	14.45						
		Interoffice Transport - Dedicated - DS1 combination - Per Mile Per Month			UNC1X	1L5XX	0.1856										
		Interoffice Transport - Dedicated - DS1 combination - Facility Termination Per Month			UNC1X	U1TF1	88.44	174.46	122.46	45.61	17.95						
		Nonrecurring Currently Combined Network Elements Switch -As-Is Charge			UNC1X	UNCCC		8.98	8.98	8.98	8.98						
	EXTENDED 4-WIRE DS1 DIGITAL EXTENDED LOOP WITH DEDICATED DS3 INTEROFFICE TRANSPORT																
		First DS1Loop in Combination - Zone 1		1	UNC1X	USLXX	70.74	217.75	121.62	51.44	14.45						
		First DS1Loop in Combination - Zone 2		2	UNC1X	USLXX	100.54	217.75	121.62	51.44	14.45						
		First DS1Loop in Combination - Zone 3		3	UNC1X	USLXX	178.39	217.75	121.62	51.44	14.45						
		Interoffice Transport - Dedicated - DS3 combination - Per Mile Per Month			UNC3X	1L5XX	3.87										
		Interoffice Transport - Dedicated - DS3 - Facility Termination per month			UNC3X	U1TF3	1,071.00	314.45	130.88	38.60	18.23						
		3/1Channel System in combination per month			UNC3X	MQ3	211.19	199.28	118.64	40.34	39.07						
		DS1 COCI in combination per month			UNC1X	UC1D1	13.76	10.07	7.08	0.00	0.00						
		Additional DS1Loop in DS3 Interoffice Transport Combination - Zone 1		1	UNC1X	USLXX	70.74	217.75	121.62	51.44	14.45						
		Additional DS1Loop in DS3 Interoffice Transport Combination - Zone 2		2	UNC1X	USLXX	100.54	217.75	121.62	51.44	14.45						
		Additional DS1Loop in DS3 Interoffice Transport Combination - Zone 3		3	UNC1X	USLXX	178.39	217.75	121.62	51.44	14.45						
		Additoinal DS1 COCI in combination per month			UNC1X	UC1D1	13.76	10.07	7.08	0.00	0.00						
		Nonrecurring Currently Combined Network Elements Switch -As-Is Charge			UNC3X	UNCCC		8.98	8.98	8.98	8.98						
	EXTENDED 2-WIRE VOICE GRADE EXTENDED LOOP/ 2 WIRE VOICE GRADE INTEROFFICE TRANSPORT																
		2-WireVG Loop in combination - Zone 1		1	UNCVX	UEAL2	12.24	127.59	60.54	42.79	2.81						
		2-WireVG Loop in combination - Zone 2		2	UNCVX	UEAL2	17.40	127.59	60.54	42.79	2.81						
		2-WireVG Loop in combination - Zone 3		3	UNCVX	UEAL2	30.87	127.59	60.54	42.79	2.81						

UNBUNDLED NETWORK ELEMENTS - Florida														Attachment: 2		Exhibit: A	
CATEGORY		RATE ELEMENTS	Interim	Zone	BCS	USOC	RATES ($)					Svc Order Submitted Elec per LSR	Svc Order Submitted Manually per LSR	Incremental Charge - Manual Svc Order vs. Electronic-1st	Incremental Charge - Manual Svc Order vs. Electronic-Add'l	Incremental Charge - Manual Svc Order vs. Electronic-Disc 1st	Incremental Charge - Manual Svc Order vs. Electronic-Disc Add'l
							Rec	Nonrecurring		Nonrecurring Disconnect		OSS Rates ($)					
								First	Add'l	First	Add'l	SOMEC	SOMAN	SOMAN	SOMAN	SOMAN	SOMAN
		Interoffice Transport - 2-wire VG - Dedicated- Per Mile Per Month			UNCVX	1L5XX	0.0091										
		Interoffice Transport - 2-wire VG - Dedicated - Facility Termination per month			UNCVX	U1TV2	25.32	94.70	52.59	50.49	21.53						
		Nonrecurring Currently Combined Network Elements Switch -As-Is Charge			UNCVX	UNCCC		8.98	8.98	8.98	8.98						
	EXTENDED 4-WIRE VOICE GRADE EXTENDED LOOP/ 4 WIRE VOICE GRADE INTEROFFICE TRANSPORT																
		4-WireVG Loop in combination - Zone 1		1	UNCVX	UEAL4	18.89	127.59	60.54	42.79	2.81						
		4-WireVG Loop in combination - Zone 2		2	UNCVX	UEAL4	26.84	127.59	60.54	42.79	2.81						
		4-WireVG Loop in combination - Zone 3		3	UNCVX	UEAL4	47.62	127.59	60.54	42.79	2.81						
		Interoffice Transport - 4-wire VG - Dedicated - Per Mile Per Month			UNCVX	1L5XX	0.0091										
		Interoffice Transport - 4-wire VG - Dedicated - Facility Termination per month			UNCVX	U1TV4	22.58	94.70	52.59	50.49	21.53						
		Nonrecurring Currently Combined Network Elements Switch -As-Is Charge			UNCVX	UNCCC		8.98	8.98	8.98	8.98						
	EXTENDED DS3 DIGITAL EXTENDED LOOP WITH DEDICATED DS3 INTEROFFICE TRANSPORT																
		DS3 Local Loop in combination - per mile per month			UNC3X	1L5ND	10.92										
		DS3 Local Loop in combination - Facility Termination per month			UNC3X	UE3PX	386.88	249.97	162.05	67.10	26.82						
		Interoffice Transport - Dedicated - DS3 - Per Mile per month			UNC3X	1L5XX	3.87										
		Interoffice Transport - Dedicated - DS3 combination - Facility Termination per month			UNC3X	U1TF3	1,071.00	314.45	130.88	38.60	18.23						
		Nonrecurring Currently Combined Network Elements Switch -As-Is Charge			UNC3X	UNCCC		8.98	8.98	8.98	8.98						
	EXTENDED STS-1 DIGITAL EXTENDED LOOP WITH DEDICATED STS-1 INTEROFFICE TRANSPORT																
		STS-1 Local Lolp in combination - per mile per month			UNCSX	1L5ND	10.92										
		STS-1 Local Loop in combination - Facility Termination per month			UNCSX	UDLS1	426.60	249.97	162.05	67.10	26.82						
		Interoffice Transport - Dedicated - STS-1 combination - per mile per month			UNCSX	1L5XX	3.87										
		Interoffice Transport - Dedicated - STS-1 combination - Facility Termination per month			UNCSX	U1TFS	1,056.00	314.45	130.88	38.60	18.23						
		Nonrecurring Currently Combined Network Elements Switch -As-Is Charge			UNCSX	UNCCC		8.98	8.98	8.98	8.98						
	EXTENDED 2-WIRE ISDN EXTENDED LOOP WITH DS1 INTEROFFICE TRANSPORT																
		First 2-Wire ISDN Loop in Combination - Zone 1		1	UNCNX	U1L2X	19.28	127.59	60.60	42.79	2.81						
		First 2-Wire ISDN Loop in Combination - Zone 2		2	UNCNX	U1L2X	27.40	127.59	60.60	42.79	2.81						
		First 2-Wire ISDN Loop in Combination - Zone 3		3	UNCNX	U1L2X	48.62	127.59	60.60	42.79	2.81						
		Interoffice Transport - Dedicated - DS1 combination - per mile per month			UNC1X	1L5XX	0.1856										
		Interoffice Transport - Dedicated - DS1 combination - Facility Termination per month			UNC1X	U1TF1	88.44	174.46	122.46	45.61	17.95						
		1/0 Channel System in combination - per month			UNC1X	MQ1	146.77	101.42	71.62								
		2-wire ISDN COCI (BRITE) - in combination - per month			UNCNX	UC1CA	3.66	10.07	7.08	0.00	0.00						
		Additional 2-wire ISDN Loop in same DS1Interoffice Transport Combination - Zone 1		1	UNCNX	U1L2X	19.28	127.59	60.60	42.79	2.81						
		Additional 2-wire ISDN Loop in same DS1Interoffice Transport Combination - Zone 2		2	UNCNX	U1L2X	27.40	127.59	60.60	42.79	2.81						
		Additional 2-wire ISDN Loop in same DS1Interoffice Transport Combination - Zone 3		3	UNCNX	U1L2X	48.62	127.59	60.60	42.79	2.81						
		Additional 2-wire ISDN COCI (BRITE) - in combination- per month			UNCNX	UC1CA	3.66	10.07	7.08	0.00	0.00						
		Nonrecurring Currently Combined Network Elements Switch -As-Is Charge			UNC1X	UNCCC		8.98	8.98	8.98	8.98						
	EXTENDED 4-WIRE DS1 DIGITAL EXTENDED LOOP WITH DEDICATED STS-1 INTEROFFICE TRANSPORT																
		First DS1 Loop Combination - Zone 1		1	UNC1X	USLXX	70.74	217.75	121.62	51.44	14.45						
		First DS1 Loop Combination - Zone 2		2	UNC1X	USLXX	100.54	217.75	121.62	51.44	14.45						
		First DS1 Loop Combination - Zone 3		3	UNC1X	USLXX	178.39	217.75	121.62	51.44	14.45						

UNBUNDLED NETWORK ELEMENTS - Florida														Attachment: 2		Exhibit: A	
CATEGORY		RATE ELEMENTS	Interim	Zone	BCS	USOC	RATES ($)					Svc Order Submitted Elec per LSR	Svc Order Submitted Manually per LSR	Incremental Charge - Manual Svc Order vs. Electronic-1st	Incremental Charge - Manual Svc Order vs. Electronic-Add'l	Incremental Charge - Manual Svc Order vs. Electronic-Disc 1st	Incremental Charge - Manual Svc Order vs. Electronic-Disc Add'l
							Rec	Nonrecurring		Nonrecurring Disconnect		OSS Rates ($)					
								First	Add'l	First	Add'l	SOMEC	SOMAN	SOMAN	SOMAN	SOMAN	SOMAN
		Interoffice Transport - Dedicated - STS-1 combination - Per Mile Per Month			UNCSX	1L5XX	3.87										
		Interoffice Transport - Dedicated - STS-1 combination - Facility Termination per month			UNCSX	U1TFS	1,056.00	314.45	130.88	38.60	18.23						
		3/1 Channel System in combination per month			UNCSX	MQ3	211.19	199.28	118.64	40.34	39.07						
		DS1 COCI in combination per month			UNC1X	UC1D1	13.76	10.07	7.08	0.00	0.00						
		Additional DS1Loop in the same STS-1 Interoffice Transport Combination - Zone 1		1	UNC1X	USLXX	70.74	217.75	121.62	51.44	14.45						
		Additional DS1Loop in the same STS-1 Interoffice Transport Combination - Zone 2		2	UNC1X	USLXX	100.54	217.75	121.62	51.44	14.45						
		Additional DS1Loop in the same STS-1 Interoffice Transport Combination - Zone 3		3	UNC1X	USLXX	178.39	217.75	121.62	51.44	14.45						
		DS1 COCI in combination per month			UNC1X	UC1D1	13.76	10.07	7.08	0.00	0.00						
		Nonrecurring Currently Combined Network Elements Switch -As-Is Charge			UNCSX	UNCCC		8.98	8.98	8.98	8.98						
	EXTENDED 4-WIRE 56 KBPS DIGITAL EXTENDED LOOP WITH 56 KBPS INTEROFFICE TRANSPORT																
		4-wire 56 kbps Local Loop in combination - Zone 1		1	UNCDX	UDL56	22.20	127.59	60.54	42.79	2.81						
		4-wire 56 kbps Local Loop in combination - Zone 2		2	UNCDX	UDL56	31.56	127.59	60.54	42.79	2.81						
		4-wire 56 kbps Local Loop in combination - Zone 3		3	UNCDX	UDL56	55.99	127.59	60.54	42.79	2.81						
		Interoffice Transport - Dedicated - 4-wire 56 kbps combination - Per Mile per month			UNCDX	1L5XX	0.0091										
		Interoffice Transport - Dedicated - 4-wire 56 kbps combination - Facility Termination per month			UNCDX	U1TD5	18.44	94.70	52.59	50.49	21.53						
		Nonrecurring Currently Combined Network Elements Switch -As-Is Charge			UNCDX	UNCCC		8.98	8.98	8.98	8.98						
	EXTENDED 4-WIRE 64 KBPS DIGITAL EXTENDED LOOP WITH 64 KBPS INTEROFFICE TRANSPORT																
		4-wire 64 kbps Lcoal Loop in Combination - Zone 1		1	UNCDX	UDL64	22.20	127.59	60.54	42.79	2.81						
		4-wire 64 kbps Lcoal Loop in Combination - Zone 2		2	UNCDX	UDL64	31.56	127.59	60.54	42.79	2.81						
		4-wire 64 kbps Lcoal Loop in Combination - Zone 3		3	UNCDX	UDL64	55.99	127.59	60.54	42.79	2.81						
		Interoffice Transport - Dedicated - 4-wire 64 kbps combination - Per Mile per month			UNCDX	1L5XX	0.0091										
		Interoffice Transport - Dedicated - 4-wire 64 kbps combination - Facility Termination per month			UNCDX	U1TD6	18.44	94.70	52.59	50.49	21.53						
		Nonrecurring Currently Combined Network Elements Switch -As-Is Charge			UNCDX	UNCCC		8.98	8.98	8.98	8.98						
	EXTENDED 2-WIRE VOICE GRADE LOOP WITH DS1 INTEROFFICE TRANSPORT w/ 3/1 MUX																
		First 2-wire VG Loop (SL2) in Combination - Zone 1		1	UNCVX	UEAL2	12.24	127.59	60.54	42.79	2.81						
		First 2-wire VG Loop (SL2) in Combination - Zone 2		2	UNCVX	UEAL2	17.40	127.59	60.54	42.79	2.81						
		First 2-wire VG Loop (SL2) in Combination - Zone 3		3	UNCVX	UEAL2	30.87	127.59	60.54	42.79	2.81						
		First Interoffice Transport - Dedicated - DS1 combination - Per Mile			UNC1X	1L5XX	0.1856										
		First Interoffice Transport - Dedicated - DS1 combination - Facility Termination per month			UNC1X	U1TF1	88.44	174.46	122.46	45.61	17.95						
		Per each DS1 Channelization System Per Month			UNC1X	MQ1	146.77	101.42	71.62								
		Per each Voice Grade COCI - Per Month per month			UNCVX	1D1VG	1.38	10.07	7.08	0.00	0.00						
		3/1 Channel System in combination per month			UNC3X	MQ3	211.19	199.28	118.64	40.34	39.07						
		Per each DS1 COCI in combination per month			UNC1X	UC1D1	13.76	10.07	7.08	0.00	0.00						
		Each Additional 2-Wire VG Loop(SL 2) in the same DS1 Interoffice Transport Combination - Zone 1		1	UNCVX	UEAL2	12.24	127.59	60.54	42.79	2.81						
		Each Additional 2-Wire VG Loop(SL2) in the same DS1 Interoffice Transport Combination - Zone 2		2	UNCVX	UEAL2	17.40	127.59	60.54	42.79	2.81						
		Each Additional 2-Wire VG Loop(SL2) in the same DS1 Interoffice Transport Combination - Zone 3		3	UNCVX	UEAL2	30.87	127.59	60.54	42.79	2.81						
		Each Additional Voice Grade COCI in combination - per month			UNCVX	1D1VG	1.38	10.07	7.08	0.00	0.00						
		Each Additional DS1 Interoffice Channel per mile in same 3/1 Channel System per month			UNC1X	1L5XX	0.1856										
		Each Additional DS1 Interoffice Channel Facility Termination in same 3/1 Channel System per month			UNC1X	U1TF1	88.44	174.46	122.46	45.61	17.95						
		Each Additional DS1 COCI combination per month			UNC1X	UC1D1	13.76	10.07	7.08	0.00	0.00						

UNBUNDLED NETWORK ELEMENTS - Florida														Attachment: 2		Exhibit: A	
CATEGORY		RATE ELEMENTS	Interim	Zone	BCS	USOC	RATES ($)					Svc Order Submitted Elec per LSR	Svc Order Submitted Manually per LSR	Incremental Charge - Manual Svc Order vs. Electronic-1st	Incremental Charge - Manual Svc Order vs. Electronic-Add'l	Incremental Charge - Manual Svc Order vs. Electronic-Disc 1st	Incremental Charge - Manual Svc Order vs. Electronic-Disc Add'l
							Rec	Nonrecurring		Nonrecurring Disconnect		OSS Rates ($)					
								First	Add'l	First	Add'l	SOMEC	SOMAN	SOMAN	SOMAN	SOMAN	SOMAN
		Nonrecurring Currently Combined Network Elements Switch -As-Is Charge			UNC1X	UNCCC		8.98	8.98	8.98	8.98						
	EXTENDED 4-WIRE VOICE GRADE LOOP WITH DEDICATED DS1 INTEROFFICE TRANSPORT w/ 3/1 MUX																
		First 4-Wire Analog Voice Grade Local Loop in Combination - Zone 1		1	UNCVX	UEAL4	18.89	127.59	60.54	42.79	2.81						
		First 4-Wire Analog Voice Grade Local Loop in Combination - Zone 2		2	UNCVX	UEAL4	26.84	127.59	60.54	42.79	2.81						
		First 4-Wire Analog Voice Grade Local Loop in Combination - Zone 3		3	UNCVX	UEAL4	47.62	127.59	60.54	42.79	2.81						
		First Interoffice Transport - Dedicated - DS1 combination - Per Mile Per Month			UNC1X	1L5XX	0.1856										
		First Interoffice Transport - Dedicated - DS1 - Facility Termination Per Month			UNC1X	U1TF1	88.44	174.46	122.46	45.61	17.95						
		Per each 1/0 Channel System in combination Per Month			UNC1X	MQ1	146.77	101.42	71.62								
		Per each Voice Grade COCI in combination - per month			UNCVX	1D1VG	1.38	10.07	7.08	0.00	0.00						
		3/1 Channel System in combination per month			UNC3X	MQ3	211.19	199.28	118.64	40.34	39.07						
		Per each DS1 COCI in combination per month			UNC1X	UC1D1	13.76	10.07	7.08	0.00	0.00						
		Additional 4-Wire Analog Voice Grade Loop in same DS1 Interoffice Transport Combination - Zone 1		1	UNCVX	UEAL4	18.89	127.59	60.54	42.79	2.81						
		Additional 4-Wire Analog Voice Grade Loop in same DS1 Interoffice Transport Combination - Zone 2		2	UNCVX	UEAL4	26.84	127.59	60.54	42.79	2.81						
		Additional 4-Wire Analog Voice Grade Loop in same DS1 Interoffice Transport Combination - Zone 3		3	UNCVX	UEAL4	47.62	127.59	60.54	42.79	2.81						
		Each Additional DS1 Interoffice Channel per mile in same 3/1 Channel System per month			UNC1X	1L5XX	0.1856										
		Each Additional DS1 Interoffice Channel Facility Termination in same 3/1 Channel System per month			UNC1X	U1TF1	88.44	174.46	122.46	45.61	17.95						
		Additional Voice Grade COCI - in combination - per month			UNCVX	1D1VG	1.38	10.07	7.08	0.00	0.00						
		Nonrecurring Currently Combined Network Elements Switch -As-Is Charge			UNC1X	UNCCC		8.98	8.98	8.98	8.98						
	EXTENDED 4-WIRE 56 KBPS DIGITAL LOOP WITH DEDICATED DS1 INTEROFFICE TRANSPORT w/ 3/1 MUX																
		First 4-Wire 56Kbps Digital Grade Local Loop in Combination - Zone 1		1	UNCDX	UDL56	22.20	127.59	60.54	42.79	2.81						
		First 4-Wire 56Kbps Digital Grade Local Loop in Combination - Zone 2		2	UNCDX	UDL56	31.56	127.59	60.54	42.79	2.81						
		First 4-Wire 56Kbps Digital Grade Local Loop in Combination - Zone 3		3	UNCDX	UDL56	55.99	127.59	60.54	42.79	2.81						
		First Interoffice Transport - Dedicated - DS1 combination - Per Mile Per Month			UNC1X	1L5XX	0.1856										
		First Interoffice Transport - Dedicated - DS1 - combination Facility Termination Per Month			UNC1X	U1TF1	88.44	174.46	122.46	45.61	17.95						
		Per each 1/0 Channel System in combination Per Month			UNC1X	MQ1	146.77	101.42	71.62								
		Per each OCU-DP COCI (data) COCI per month (2.4-64kbs)			UNCDX	1D1DD	2.10	10.07	7.08	0.00	0.00						
		3/1 Channel System in combination per month			UNC3X	MQ3	211.19	199.28	118.64	40.34	39.07						
		Per each DS1 COCI in combination per month			UNC1X	UC1D1	13.76	10.07	7.08	0.00	0.00						
		Additional 4-Wire 56Kbps Digital Grade Loop in same DS1 Interoffice Transport Combination - Zone 1		1	UNCDX	UDL56	22.20	127.59	60.54	42.79	2.81						
		Additional 4-Wire 56Kbps Digital Grade Loop in same DS1 Interoffice Transport Combination - Zone 2		2	UNCDX	UDL56	31.56	127.59	60.54	42.79	2.81						
		Additional 4-Wire 56Kbps Digital Grade Loop in same DS1 Interoffice Transport Combination - Zone 3		3	UNCDX	UDL56	55.99	127.59	60.54	42.79	2.81						
		OCU-DP COCI (data) COCI in combination per month (2.4-64kbs)			UNCDX	1D1DD	2.10	10.07	7.08	0.00	0.00						
		Each Additional DS1 Interoffice Channel per mile in same 3/1 Channel System per month			UNC1X	1L5XX	0.1856										
		Each Additional DS1 Interoffice Channel Facility Termination in same 3/1 Channel System per month			UNC1X	U1TF1	88.44	174.46	122.46	45.61	17.95						
		Each Additional DS1 COCI in the same 3/1 channel system combination per month			UNC1X	UC1D1	13.76	10.07	7.08	0.00	0.00						

UNBUNDLED NETWORK ELEMENTS - Florida														Attachment: 2		Exhibit: A	
CATEGORY		RATE ELEMENTS	Interim	Zone	BCS	USOC	RATES ($)					Svc Order Submitted Elec per LSR	Svc Order Submitted Manually per LSR	Incremental Charge - Manual Svc Order vs. Electronic-1st	Incremental Charge - Manual Svc Order vs. Electronic-Add'l	Incremental Charge - Manual Svc Order vs. Electronic-Disc 1st	Incremental Charge - Manual Svc Order vs. Electronic-Disc Add'l
							Rec	Nonrecurring		Nonrecurring Disconnect		OSS Rates ($)					
								First	Add'l	First	Add'l	SOMEC	SOMAN	SOMAN	SOMAN	SOMAN	SOMAN
		Nonrecurring Currently Combined Network Elements Switch -As-Is Charge			UNC1X	UNCCC		8.98	8.98	8.98	8.98						
	EXTENDED 4-WIRE 64 KBPS DIGITAL LOOP WITH DEDICATED DS1 INTEROFFICE TRANSPORT w/ 3/1 MUX																
		First 4-Wire 64Kbps Digital Grade Loop in a DS1 Interoffice Transport Combination - Zone 1		1	UNCDX	UDL64	22.20	127.59	60.54	42.79	2.81						
		First 4-Wire 64Kbps Digital Grade Loop in a DS1 Interoffice Transport Combination - Zone 2		2	UNCDX	UDL64	31.56	127.59	60.54	42.79	2.81						
		First 4-Wire 64Kbps Digital Grade Loop in a DS1 Interoffice Transport Combination - Zone 3		3	UNCDX	UDL64	55.99	127.59	60.54	42.79	2.81						
		First Interoffice Transport - Dedicated - DS1 combination - Per Mile Per Month			UNC1X	1L5XX	0.1856										
		First Interoffice Transport - Dedicated - DS1 combination - Facility Termination Per Month			UNC1X	U1TF1	88.44	174.46	122.46	45.61	17.95						
		Per each Channel System 1/0 in combination Per Month			UNC1X	MQ1	146.77	101.42	71.62								
		Per each OCU-DP COCI (data) in combination - per month (2.4-64kbs)			UNCDX	1D1DD	2.10	10.07	7.08	0.00	0.00						
		3/1 Channel System in combination per month			UNC3X	MQ3	211.19	199.28	118.64	40.34	39.07						
		Per each DS1 COCI in combination per month			UNC1X	UC1D1	13.76	10.07	7.08	0.00	0.00						
		Additional 4-Wire 64Kbps Digital Grade Loop in same DS1 Interoffice Transport Combination - Zone 1		1	UNCDX	UDL64	22.20	127.59	60.54	42.79	2.81						
		Additional 4-Wire 64Kbps Digital Grade Loop in same DS1 Interoffice Transport Combination - Zone 2		2	UNCDX	UDL64	31.56	127.59	60.54	42.79	2.81						
		Additional 4-Wire 64Kbps Digital Grade Loop in same DS1 Interoffice Transport Combination - Zone 3		3	UNCDX	UDL64	55.99	127.59	60.54	42.79	2.81						
		Additional OCU-DP COCI (data) - DS1 to DS0 Channel System combination - per month (2.4-64kbs)			UNCDX	1D1DD	2.10	10.07	7.08	0.00	0.00						
		Each Additional DS1 Interoffice Channel per mile in same 3/1 Channel System per month			UNC1X	1L5XX	0.1856										
		Each Additional DS1 Interoffice Channel Facility Termination in same 3/1 Channel System per month			UNC1X	U1TF1	88.44	174.46	122.46	45.61	17.95						
		Each Additional DS1 COCI in the same 3/1 channel system combination per month			UNC1X	UC1D1	13.76	10.07	7.08	0.00	0.00						
		Nonrecurring Currently Combined Network Elements Switch -As-Is Charge			UNC1X	UNCCC		8.98	8.98	8.98	8.98						
	EXTENDED 2-WIRE ISDN LOOP WITH DS1 INTEROFFICE TRANSPORT w/ 3/1 MUX																
		First 2-Wire ISDN Loop in a DS1 Interoffice Combination Transport - Zone 1		1	UNCNX	U1L2X	19.28	127.59	60.60	42.79	2.81						
		First 2-Wire ISDN Loop in a DS1 Interoffice Combination Transport - Zone 2		2	UNCNX	U1L2X	27.40	127.59	60.60	42.79	2.81						
		First 2-Wire ISDN Loop in a DS1 Interoffice Combination Transport - Zone 3		3	UNCNX	U1L2X	48.62	127.59	60.60	42.79	2.81						
		First Interoffice Transport - Dedicated - DS1 combination - Per Mile per month			UNC1X	1L5XX	0.1856										
		First Interoffice Transport - Dedicated - DS1 combination - Facility Termination per month			UNC1X	U1TF1	88.44	174.46	122.46	45.61	17.95						
		Per each Channel System 1/0 in combination - per month			UNC1X	MQ1	146.77	101.42	71.62								
		Per each 2-wire ISDN COCI (BRITE) in combination - per month			UNCNX	UC1CA	3.66	10.07	7.08	0.00	0.00						
		3/1 Channel System in combination per month			UNC3X	MQ3	211.19	199.28	118.64	40.34	39.07						
		Per each DS1 COCI in combination per month			UNC1X	UC1D1	13.76	10.07	7.08	0.00	0.00						
		Additional 2-wire ISDN Loop in same DS1Interoffice Transport Combination - Zone 1		1	UNCNX	U1L2X	19.28	127.59	60.60	42.79	2.81						
		Additional 2-wire ISDN Loop in same DS1Interoffice Transport Combination - Zone 2		2	UNCNX	U1L2X	27.40	127.59	60.60	42.79	2.81						
		Additional 2-wire ISDN Loop in same DS1Interoffice Transport Combination - Zone 3		3	UNCNX	U1L2X	48.62	127.59	60.60	42.79	2.81						
		Additional 2-wire ISDN COCI (BRITE) in same 1/0 channel system combination- per month			UNCNX	UC1CA	3.66	10.07	7.08	0.00	0.00						

UNBUNDLED NETWORK ELEMENTS - Florida														Attachment: 2		Exhibit: A	
CATEGORY		RATE ELEMENTS	Interim	Zone	BCS	USOC	RATES ($)					Svc Order Submitted Elec per LSR	Svc Order Submitted Manually per LSR	Incremental Charge - Manual Svc Order vs. Electronic-1st	Incremental Charge - Manual Svc Order vs. Electronic-Add'l	Incremental Charge - Manual Svc Order vs. Electronic-Disc 1st	Incremental Charge - Manual Svc Order vs. Electronic-Disc Add'l
							Rec	Nonrecurring		Nonrecurring Disconnect		OSS Rates ($)					
								First	Add'l	First	Add'l	SOMEC	SOMAN	SOMAN	SOMAN	SOMAN	SOMAN
		Each Additional DS1 Interoffice Channel per mile in same 3/1 Channel System per month			UNC1X	1L5XX	0.1856										
		Each Additional DS1 Interoffice Channel Facility Termination in same 3/1 Channel System per month			UNC1X	U1TF1	88.44	174.46	122.46	45.61	17.95						
		Each Additional DS1 COCI in the same 3/1 channel system combination per month			UNC1X	UC1D1	13.76	10.07	7.08	0.00	0.00						
		Nonrecurring Currently Combined Network Elements Switch -As-Is Charge			UNC1X	UNCCC		8.98	8.98	8.98	8.98						
	EXTENDED 4-WIRE DS1 LOOP WITH DEDICATED DS1 INTEROFFICE TRANSPORT w/ 3/1 MUX																
		First 4-wire DS1 Digital Lcoal Loop in Combination - Zone 1		1	UNC1X	USLXX	70.74	217.75	121.62	51.44	14.45						
		First 4-wire DS1 Digital Lcoal Loop in Combination - Zone 2		2	UNC1X	USLXX	100.54	217.75	121.62	51.44	14.45						
		First 4-wire DS1 Digital Lcoal Loop in Combination - Zone 3		3	UNC1X	USLXX	178.39	217.75	121.62	51.44	14.45						
		First Interoffice Transport - Dedicated - DS1 combination - Per Mile Per Month			UNC1X	1L5XX	0.1856										
		First Interoffice Transport - Dedicated - DS1 combination - Facility Termination Per Month			UNC1X	U1TF1	88.44	174.46	122.46	45.61	17.95						
		3/1 Channel System in combination per month			UNC3X	MQ3	211.19	199.28	118.64	40.34	39.07						
		Per each DS1 COCI combination per month			UNC1X	UC1D1	13.76	10.07	7.08	0.00	0.00						
		Each Additional DS1 Interoffice Channel per mile in same 3/1 Channel System per month			UNC1X	1L5XX	0.1856										
		Each Additional DS1 Interoffice Channel Facility Termination in same 3/1 Channel System per month			UNC1X	U1TF1	88.44	174.46	122.46	45.61	17.95						
		Each Additional DS1 COCI in the same 3/1 channel system combination per month			UNC1X	UC1D1	13.76	10.07	7.08	0.00	0.00						
		Additional 4-Wire DS1 Digital Local Loop in Combination - Zone 1		1	UNC1X	USLXX	70.74	217.75	121.62	51.44	14.45						
		Additional 4-Wire DS1 Digital Local Loop in Combination - Zone 2		2	UNC1X	USLXX	100.54	217.75	121.62	51.44	14.45						
		Additional 4-Wire DS1 Digital Local Loop in Combination - Zone 3		3	UNC1X	USLXX	178.39	217.75	121.62	51.44	14.45						
		Nonrecurring Currently Combined Network Elements Switch -As-Is Charge			UNC1X	UNCCC		8.98	8.98	8.98	8.98						
	EXTENDED 4-WIRE 56 KBPS DIGITAL EXTENDED LOOP WITH DS0 INTEROFFICE TRANSPORT																
		First 4-wire 56 kbps Local Loop in combination - Zone 1		1	UNCDX	UDL56	22.20	127.59	60.54	42.79	2.81						
		First 4-wire 56 kbps Local Loop in combination - Zone 2		2	UNCDX	UDL56	31.56	127.59	60.54	42.79	2.81						
		First 4-wire 56 kbps Local Loop in combination - Zone 3		3	UNCDX	UDL56	55.99	127.59	60.54	42.79	2.81						
		First 4-wiree 56 kbps Interoffice Transport - Dedicated - Per Mile per month			UNCDX	1L5XX	0.0091										
		First 4-wire 56 kbps Interoffice Transport - Dedicated - Facility Termination per month			UNCDX	U1TD5	18.44	94.70	52.59	50.49	21.53						
		Nonrecurring Currently Combined Network Elements Switch -As-Is Charge			UNCDX	UNCCC		8.98	8.98	8.98	8.98						
	EXTENDED 4-WIRE 64 KBPS DIGITAL EXTENDED LOOP WITH DS0 INTEROFFICE TRANSPORT																
		First 4-wire 64 kbps Local Loop in combination - Zone 1		1	UNCDX	UDL64	22.20	127.59	60.54	42.79	2.81						
		First 4-wire 64 kbps Local Loop in combination - Zone 2		2	UNCDX	UDL64	31.56	127.59	60.54	42.79	2.81						
		First 4-wire 64 kbps Local Loop in combination - Zone 3		3	UNCDX	UDL64	55.99	127.59	60.54	42.79	2.81						
		First I4-wire 65 kbps Interoffice Transport - Dedicated - Per Mile per month			UNCDX	1L5XX	0.0091										
		First 4-wire 64 kbps Interoffice Transport - Dedicated - Facility Termination per month			UNCDX	U1TD6	18.44	94.70	52.59	50.49	21.53						
		Nonrecurring Currently Combined Network Elements Switch -As-Is Charge			UNCDX	UNCCC		8.98	8.98	8.98	8.98						
ADDITIONAL NETWORK ELEMENTS																	
	When used as a part of a currently combined facility, the non-recurrng charges do not apply, but a Switch As Is charge does apply.																
	When used as ordinarily combined network elements in All States, the non-recurring charges apply and the Switch As Is Charge does not.																
	Nonrecurring Currently Combined Network Elements "Switch As Is" Charge (One applies to each combination)																
		Nonrecurring Currently Combined Network Elements Switch -As-Is Charge - 2 wire/4-Wire VG			UNCVX	UNCCC		8.98	8.98	8.98	8.98						

UNBUNDLED NETWORK ELEMENTS - Florida														Attachment: 2		Exhibit: A	
CATEGORY		RATE ELEMENTS	Interim	Zone	BCS	USOC	RATES ($)					Svc Order Submitted Elec per LSR	Svc Order Submitted Manually per LSR	Incremental Charge - Manual Svc Order vs. Electronic-1st	Incremental Charge - Manual Svc Order vs. Electronic-Add'l	Incremental Charge - Manual Svc Order vs. Electronic-Disc 1st	Incremental Charge - Manual Svc Order vs. Electronic-Disc Add'l
							Rec	Nonrecurring		Nonrecurring Disconnect		OSS Rates ($)					
								First	Add'l	First	Add'l	SOMEC	SOMAN	SOMAN	SOMAN	SOMAN	SOMAN
		Nonrecurring Currently Combined Network Elements Switch -As-Is Charge - 56/64 kbps			UNCDX	UNCCC		8.98	8.98	8.98	8.98						
	MULTIPLEXERS																
		DS1 to DS0 Channel System per month			UNC1X	MQ1	146.77	101.42	71.62								
		OCU-DP COCI (data) - DS1 to DS0 Channel System - per month (2.4-64kbs) used for a Local Loop			UDL	1D1DD	2.10	10.07	7.08								
		OCU-DP COCI (data) - DS1 to DS0 Channel System - per month (2.4-64kbs) used for connection to a channelized DS1 Local Channel in the same SWC as collocation			U1TUD	1D1DD	2.10	10.07	7.08	0.00	0.00						
		2-wire ISDN COCI (BRITE) - DS1 to DS0 Channel Systsem - per month for a Local Loop			UDN	UC1CA	3.66	10.07	7.08								
		2-wire ISDN COCI (BRITE) - DS1 to DS0 Channel Systsem - per month used for connection to a channelized DS1 Local Channel in the same SWC as collocation			U1TUB	UC1CA	3.66	10.07	7.08	0.00	0.00						
		Voice Grade COCI - DS1 to DS0 Channel System - per month used for a Local Loop			UEA	1D1VG	1.38	10.07	7.08								
		Voice Grade COCI - DS1 to DS0 Channel System - per month used for connection to a channelized DS1 Local Channel in the same SWC as collocation			U1TUC	1D1VG	1.38	10.07	7.08	0.00	0.00						
		DS3 to DS1 Channel System per month			UNC3X	MQ3	211.19	199.28	118.64	40.34	39.07						
		STS-1 to DS1 Channel System per month			UNCSX	MQ3	211.19	199.28	118.64	40.34	39.07						
		DS1 COCI used with Loop per month			USL	UC1D1	13.76	10.07	7.08								
		DS1 COCI (used for connection to a channelized DS1 Local Channel in the same SWC as collocation) per month			U1TUA	UC1D1	13.76	10.07	7.08	0.00	0.00						
		DS1 COCI used with Interoffice Channel per month			U1TD1	UC1D1	13.76	10.07	7.08	0.00	0.00						
		DS3 Interface Unit (DS1 COCI) used with Local Channel per month			ULDD1	UC1D1	13.76	10.07	7.08	0.00	0.00						

UNBUNDLED NETWORK ELEMENTS - Georgia														Attachment: 2		Exhibit: A	
CATEGORY		RATE ELEMENTS	Interim	Zone	BCS	USOC	RATES ($)					Svc Order Submitted Elec per LSR	Svc Order Submitted Manually per LSR	Incremental Charge - Manual Svc Order vs. Electronic-1st	Incremental Charge - Manual Svc Order vs. Electronic-Add'l	Incremental Charge - Manual Svc Order vs. Electronic-Disc 1st	Incremental Charge - Manual Svc Order vs. Electronic-Disc Add'l
							Rec	Nonrecurring		Nonrecurring Disconnect		OSS Rates ($)					
								First	Add'l	First	Add'l	SOMEC	SOMAN	SOMAN	SOMAN	SOMAN	SOMAN
	The "Zone" shown in the sections for stand-alone loops or loops as part of a combination refers to Geographically Deaveraged UNE Zones. To view Geographically Deaveraged UNE Zone Designations by Central Office, refer to internet Website: http://www.interconnection.bellsouth.com/become_a_clec/html/interconnection.htm																
OPERATIONAL SUPPORT SYSTEMS (OSS) - "REGIONAL RATES"																	
	NOTE: (1) CLEC should contact its contract negotiator if it prefers the "state specific" OSS charges as ordered by the State Commissions. The OSS charges currently contained in this rate exhibit are the BellSouth "regional" service ordering charges. CLEC may elect either the state specific Commission ordered rates for the service ordering charges, or CLEC may elect the regional service ordering charge, however, CLEC can not obtain a mixture of the two regardless if CLEC has a interconnection contract established in each of the 9 states.																
	NOTE: (2) Any element that can be ordered electronically will be billed according to the SOMEC rate listed in this category. Please refer to BellSouth's Local Ordering Handbook (LOH) to determine if a product can be ordered electronically. For those elements that cannot be ordered electronically at present per the LOH, the listed SOMEC rate in this category reflects the charge that would be billed to a CLEC once electronic ordering capabilities come on-line for that element. Otherwise, the manual ordering charge, SOMAN, will be applied to a CLECs bill when it submits an LSR to BellSouth.																
		OSS - Electronic Service Order Charge, Per Local Service Request (LSR) - UNE Only				SOMEC		3.50	0.00	3.50	0.00						
		OSS - Manual Service Order Charge, Per Local Service Request (LSR) - UNE Only				SOMAN		11.73	0.00	6.13	0.00						
UNE SERVICE DATE ADVANCEMENT CHARGE																	
	NOTE: The Expedite charge will be maintained commensurate with BellSouth's FCC No.1 Tariff, Section 5 as applicable.																
		UNE Expedite Charge per Circuit or Line Assignable USOC, per Day			UAL, UEANL, UCL, UEF, UDC, UDF, UEQ, UDL, UENTW, UDN, UEA, UHL, ULC, USL, U1T12, U1T48, U1TD1, U1TD3, U1TDX, U1TO3, U1TS1, U1TVX, UC1BC, UC1BL, UC1CC, UC1CL, UC1DC, UC1DL, UC1EC, UC1EL, UC1FC, UC1FL, UC1GC, UC1GL, UC1HC, UC1HL, UDL12, UDL48, UDLO3, UDLSX, UE3, ULD12, ULD48, ULDD1, ULDD3, ULDDX, ULDO3, ULDS1, ULDVX, UNC1X, UNC3X, UNCDX, UNCNX, UNCSX, UNCVX, UNLD1, UNLD3, UXTD1, UXTD3, UXTS1, U1TUC, U1TUD, U1TUB, U1TUA	SDASP		200.00									
UNBUNDLED EXCHANGE ACCESS LOOP																	
	2-WIRE ANALOG VOICE GRADE LOOP																
		2-Wire Analog Voice Grade Loop - Service Level 1- Zone 1		1	UEANL	UEAL2	10.51	40.02	9.99	5.61	1.72						
		2-Wire Analog Voice Grade Loop - Service Level 1- Zone 2		2	UEANL	UEAL2	15.85	40.02	9.99	5.61	1.72						
		2-Wire Analog Voice Grade Loop - Service Level 1- Zone 3		3	UEANL	UEAL2	31.97	40.02	9.99	5.61	1.72						
		2-Wire Analog Voice Grade Loop - Service Level 1- Zone 1		1	UEANL	UEASL	10.51	40.02	9.99	5.61	1.72						
		2-Wire Analog Voice Grade Loop - Service Level 1- Zone 2		2	UEANL	UEASL	15.85	40.02	9.99	5.61	1.72						
		2-Wire Analog Voice Grade Loop - Service Level 1- Zone 3		3	UEANL	UEASL	31.97	40.02	9.99	5.61	1.72						
		Unbundled Miscellaneous Rate Element, Tag Loop at End User Premise			UEANL	URETL		8.33	0.83								
		Loop Testing - Basic 1st Half Hour			UEANL	URET1		25.12	25.12								
		Loop Testing - Basic Additional Half Hour			UEANL	URETA		13.62	13.62								

UNBUNDLED NETWORK ELEMENTS - Georgia													Attachment: 2		Exhibit: A	
CATEGORY	RATE ELEMENTS	Interim	Zone	BCS	USOC	RATES ($)					Svc Order Submitted Elec per LSR	Svc Order Submitted Manually per LSR	Incremental Charge - Manual Svc Order vs. Electronic-1st	Incremental Charge - Manual Svc Order vs. Electronic-Add'l	Incremental Charge - Manual Svc Order vs. Electronic-Disc 1st	Incremental Charge - Manual Svc Order vs. Electronic-Disc Add'l
						Rec	Nonrecurring		Nonrecurring Disconnect		OSS Rates ($)					
							First	Add'l	First	Add'l	SOMEC	SOMAN	SOMAN	SOMAN	SOMAN	SOMAN
	CLEC to CLEC Conversion Charge Without Outside Dispatch (UVL-SL1)			UEANL	UREWO		15.75	8.92								
	Unbundled Voice Loop, Non-Design Voice Loop, billing for BST providing make-up (Engineering Information - E.I.)			UEANL	UEANM		7.30	7.30								
	Manual Order Coordiantion for UVL-SL1s (per loop)			UEANL	UEAMC		18.92	18.92								
	Order Coordination for Specified Conversion Time for UVL-SL1 (per LSR)			UEANL	OCOSL		57.79									
2-WIRE UNBUNDLED COPPER LOOP - NON-DESIGNED																
	2 Wire Unbundled Copper Loop Non-Designed- Zone 1		1	UEQ	UEQ2X	11.02	44.69	22.40	0.00	0.00						
	2 Wire Unbundled Copper Loop Non-Designed- Zone 2		2	UEQ	UEQ2X	12.72	44.69	22.40	0.00	0.00						
	2 Wire Unbundled Copper Loop Non-Designed-Zone 3		3	UEQ	UEQ2X	20.22	44.69	22.40	0.00	0.00						
	Unbundled Miscellaneous Rate Element, Tag Loop at End User Premise			UEQ	URETL		8.33	0.83								
	Manual Order Coordination 2 Wire Unbundled Copper Loop - Non-Designed (per loop)			UEQ	USBMC		18.92	18.92								
	Unbundled Copper Loop, Non-Design Copper Loop, billing for BST providing make-up (Engineering Information - E.I.)			UEQ	UEQMU		7.30	7.30								
	Loop Testing - Basic 1st Half Hour			UEQ	URET1		25.12	25.12								
	Loop Testing - Basic Additional Half Hour			UEQ	URETA		13.62	13.62								
	CLEC to CLEC Conversion Charge Without Outside Dispatch (UCL-ND)			UEQ	UREWO		14.25	7.42								
UNBUNDLED EXCHANGE ACCESS LOOP																
2-WIRE ANALOG VOICE GRADE LOOP																
	2-Wire Analog Voice Grade Loop - Service Level 2 w/Loop or Ground Start Signaling - Zone 1		1	UEA	UEAL2	11.57	79.85	24.65	18.92	7.87						
	2-Wire Analog Voice Grade Loop - Service Level 2 w/Loop or Ground Start Signaling - Zone 2		2	UEA	UEAL2	16.95	79.85	24.65	18.92	7.87						
	2-Wire Analog Voice Grade Loop - Service Level 2 w/Loop or Ground Start Signaling - Zone 3		3	UEA	UEAL2	33.08	79.85	24.65	18.92	7.87						
	Order Coordination for Specified Conversion Time (per LSR)			UEA	OCOSL		57.79									
	2-Wire Analog Voice Grade Loop - Service Level 2 w/Reverse Battery Signaling - Zone 1		1	UEA	UEAR2	11.57	79.85	24.65	18.92	7.87						
	2-Wire Analog Voice Grade Loop - Service Level 2 w/Reverse Battery Signaling - Zone 2		2	UEA	UEAR2	16.95	79.85	24.65	18.92	7.87						
	2-Wire Analog Voice Grade Loop - Service Level 2 w/Reverse Battery Signaling - Zone 3		3	UEA	UEAR2	33.08	79.85	24.65	18.92	7.87						
	Order Coordination for Specified Conversion Time (per LSR)			UEA	OCOSL		57.79									
	CLEC to CLEC Conversion Charge without outside dispatch			UEA	UREWO		87.72	36.36								
	Loop Tagging - Service Level 2 (SL2)			UEA	URETL		11.19	1.10								
4-WIRE ANALOG VOICE GRADE LOOP																
	4-Wire Analog Voice Grade Loop - Zone 1		1	UEA	UEAL4	17.80	93.01	28.17	19.52	8.12						
	4-Wire Analog Voice Grade Loop - Zone 2		2	UEA	UEAL4	21.68	93.01	28.17	19.52	8.12						
	4-Wire Analog Voice Grade Loop - Zone 3		3	UEA	UEAL4	30.25	93.01	28.17	19.52	8.12						
	Order Coordination for Specified Conversion Time (per LSR)			UEA	OCOSL		57.79									
	CLEC to CLEC Conversion Charge without outside dispatch			UEA	UREWO		87.72	36.36								
2-WIRE ISDN DIGITAL GRADE LOOP																
	2-Wire ISDN Digital Grade Loop - Zone 1		1	UDN	U1L2X	21.89	180.06	35.25	18.23	6.97						
	2-Wire ISDN Digital Grade Loop - Zone 2		2	UDN	U1L2X	25.27	180.06	35.25	18.23	6.97						
	2-Wire ISDN Digital Grade Loop - Zone 3		3	UDN	U1L2X	40.17	180.06	35.25	18.23	6.97						
	Order Coordination For Specified Conversion Time (per LSR)			UDN	OCOSL		57.79									
	CLEC to CLEC Conversion Charge without outside dispatch			UDN	UREWO		120.98	33.04								
2-WIRE ASYMMETRICAL DIGITAL SUBSCRIBER LINE (ADSL) COMPATIBLE LOOP																
	2 Wire Unbundled ADSL Loop including manual service inquiry & facility reservation - Zone 1	I	1	UAL	UAL2X	11.23	44.69	31.55	0.00	0.00						
	2 Wire Unbundled ADSL Loop including manual service inquiry & facility reservation - Zone 2	I	2	UAL	UAL2X	12.97	44.69	31.55	0.00	0.00						
	2 Wire Unbundled ADSL Loop including manual service inquiry & facility reservation - Zone 3	I	3	UAL	UAL2X	20.62	44.69	31.55	0.00	0.00						
	Order Coordination for Specified Conversion Time (per LSR)			UAL	OCOSL		57.79									

UNBUNDLED NETWORK ELEMENTS - Georgia														Attachment: 2		Exhibit: A	
CATEGORY	RATE ELEMENTS	Interim	Zone	BCS	USOC	RATES ($)					Svc Order Submitted Elec per LSR	Svc Order Submitted Manually per LSR	Incremental Charge - Manual Svc Order vs. Electronic-1st	Incremental Charge - Manual Svc Order vs. Electronic-Add'l	Incremental Charge - Manual Svc Order vs. Electronic-Disc 1st	Incremental Charge - Manual Svc Order vs. Electronic-Disc Add'l
						Rec	Nonrecurring		Nonrecurring Disconnect		OSS Rates ($)					
							First	Add'l	First	Add'l	SOMEC	SOMAN	SOMAN	SOMAN	SOMAN	SOMAN
	2 Wire Unbundled ADSL Loop without manual service inquiry & facility reservaton - Zone 1	I	1	UAL	UAL2W	11.23	44.69	31.55	0.00	0.00						
	2 Wire Unbundled ADSL Loop without manual service inquiry & facility reservaton - Zone 2	I	2	UAL	UAL2W	12.97	44.69	31.55	0.00	0.00						
	2 Wire Unbundled ADSL Loop without manual service inquiry & facility reservaton - Zone 3	I	3	UAL	UAL2W	20.62	44.69	31.55	0.00	0.00						
	Order Coordination for Specified Conversion Time (per LSR)			UAL	OCOSL		57.79									
	CLEC to CLEC Conversion Charge without outside dispatch	I		UAL	UREWO		44.69	29.29								
	2-WIRE HIGH BIT RATE DIGITAL SUBSCRIBER LINE (HDSL) COMPATIBLE LOOP															
	2 Wire Unbundled HDSL Loop including manual service inquiry & facility reservation - Zone 1	I	1	UHL	UHL2X	7.88	44.69	31.55	0.00	0.00						
	2 Wire Unbundled HDSL Loop including manual service inquiry & facility reservation - Zone 2	I	2	UHL	UHL2X	9.09	44.69	31.55	0.00	0.00						
	2 Wire Unbundled HDSL Loop including manual service inquiry & facility reservation - Zone 3	I	3	UHL	UHL2X	14.48	44.69	31.55	0.00	0.00						
	Order Coordination for Specified Conversion Time (per LSR)			UHL	OCOSL		57.79									
	2 Wire Unbundled HDSL Loop without manual service inquiry and facility reservation - Zone 1	I	1	UHL	UHL2W	7.88	44.69	31.55	0.00	0.00						
	2 Wire Unbundled HDSL Loop without manual service inquiry and facility reservation - Zone 2	I	2	UHL	UHL2W	9.09	44.69	31.55	0.00	0.00						
	2 Wire Unbundled HDSL Loop without manual service inquiry and facility reservation - Zone 3	I	3	UHL	UHL2W	14.48	44.69	31.55	0.00	0.00						
	Order Coordination for Specified Conversion Time (per LSR)			UHL	OCOSL		57.79									
	CLEC to CLEC Conversion Charge without outside dispatch	I		UHL	UREWO		44.69	31.55								
	4-WIRE HIGH BIT RATE DIGITAL SUBSCRIBER LINE (HDSL) COMPATIBLE LOOP															
	4 Wire Unbundled HDSL Loop including manual service inquiry and facility reservation - Zone 1	I	1	UHL	UHL4X	10.39	44.69	31.55	0.00	0.00						
	4-Wire Unbundled HDSL Loop including manual service inquiry and facility reservation - Zone 2	I	2	UHL	UHL4X	12.00	44.69	31.55	0.00	0.00						
	4-Wire Unbundled HDSL Loop including manual service inquiry and facility reservation - Zone 3	I	3	UHL	UHL4X	19.07	44.69	31.55	0.00	0.00						
	Order Coordination for Specified Conversion Time (per LSR)			UHL	OCOSL		57.79									
	4-Wire Unbundled HDSL Loop without manual service inquiry and facility reservation - Zone 1	I	1	UHL	UHL4W	10.39	44.69	31.55	0.00	0.00						
	4-Wire Unbundled HDSL Loop without manual service inquiry and facility reservation - Zone 2	I	2	UHL	UHL4W	12.00	44.69	31.55	0.00	0.00						
	4-Wire Unbundled HDSL Loop without manual service inquiry and facility reservation - Zone 3	I	3	UHL	UHL4W	19.07	44.69	31.55	0.00	0.00						
	Order Coordination for Specified Conversion Time (per LSR)			UHL	OCOSL		57.79									
	CLEC to CLEC Conversion Charge without outside dispatch	I		UHL	UREWO		44.69	31.55								
	4-WIRE DS1 DIGITAL LOOP															
	4-Wire DS1 Digital Loop - Zone 1		1	USL, NTCD1	USLXX	41.02	211.93	72.49	38.24	7.20						
	4-Wire DS1 Digital Loop - Zone 2		2	USL, NTCD1	USLXX	46.41	211.93	72.49	38.24	7.20						
	4-Wire DS1 Digital Loop - Zone 3		3	USL, NTCD1	USLXX	62.03	211.93	72.49	38.24	7.20						
	Order Coordination for Specified Conversion Time (per LSR)			USL, NTCD1	OCOSL		57.79									
	CLEC to CLEC Conversion Charge without outside dispatch			USL, NTCD1	UREWO		100.91	42.97								
	4-WIRE 19.2, 56 OR 64 KBPS DIGITAL GRADE LOOP															
	4 Wire Unbundled Digital 19.2 Kbps		1	UDL	UDL19	21.86	196.66	37.00	18.82	7.20						
	4 Wire Unbundled Digital 19.2 Kbps		2	UDL	UDL19	28.36	196.66	37.00	18.82	7.20						
	4 Wire Unbundled Digital 19.2 Kbps		3	UDL	UDL19	38.22	196.66	37.00	18.82	7.20						
	4 Wire Unbundled Digital Loop 56 Kbps - Zone 1		1	UDL	UDL56	21.86	196.66	37.00	18.82	7.20						
	4 Wire Unbundled Digital Loop 56 Kbps - Zone 2		2	UDL	UDL56	28.36	196.66	37.00	18.82	7.20						
	4 Wire Unbundled Digital Loop 56 Kbps - Zone 3		3	UDL	UDL56	38.22	196.66	37.00	18.82	7.20						
	Order Coordination for Specified Conversion Time (per LSR)			UDL	OCOSL		57.79									
	4 Wire Unbundled Digital Loop 64 Kbps - Zone 1		1	UDL	UDL64	21.86	196.66	37.00	18.82	7.20						
	4 Wire Unbundled Digital Loop 64 Kbps - Zone 2		2	UDL	UDL64	28.36	196.66	37.00	18.82	7.20						
	4 Wire Unbundled Digital Loop 64 Kbps - Zone 3		3	UDL	UDL64	38.22	196.66	37.00	18.82	7.20						
	Order Coordination for Specified Conversion Time (per LSR)			UDL	OCOSL		57.79									
	CLEC to CLEC Conversion Charge without outside dispatc h			UDL	UREWO		101.95	49.66								

UNBUNDLED NETWORK ELEMENTS - Georgia														Attachment: 2		Exhibit: A	
CATEGORY		RATE ELEMENTS	Interim	Zone	BCS	USOC	RATES ($)					Svc Order Submitted Elec per LSR	Svc Order Submitted Manually per LSR	Incremental Charge - Manual Svc Order vs. Electronic-1st	Incremental Charge - Manual Svc Order vs. Electronic-Add'l	Incremental Charge - Manual Svc Order vs. Electronic-Disc 1st	Incremental Charge - Manual Svc Order vs. Electronic-Disc Add'l
							Rec	Nonrecurring		Nonrecurring Disconnect		OSS Rates ($)					
								First	Add'l	First	Add'l	SOMEC	SOMAN	SOMAN	SOMAN	SOMAN	SOMAN
	2-WIRE Unbundled COPPER LOOP																
		2-Wire Unbundled Copper Loop-Designed including manual service inquiry & facility reservation - Zone 1	I	1	UCL	UCLPB	12.02	44.69	31.55	0.00	0.00						
		2-Wire Unbundled Copper Loop-Designed including manual service inquiry & facility reservation - Zone 2	I	2	UCL	UCLPB	13.88	44.69	31.55	0.00	0.00						
		2 Wire Unbundled Copper Loop-Designed including manual service inquiry & facility reservation - Zone 3	I	3	UCL	UCLPB	22.07	44.69	31.55	0.00	0.00						
		Order Coordination for Unbundled Copper Loops (per loop)			UCL	UCLMC		18.92	18.92								
		2-Wire Unbundled Copper Loop-Designed without manual service inquiry and facility reservation - Zone 1	I	1	UCL	UCLPW	12.02	44.69	31.55	0.00	0.00						
		2-Wire Unbundled Copper Loop-Designed without manual service inquiry and facility reservation - Zone 2	I	2	UCL	UCLPW	13.88	44.69	31.55	0.00	0.00						
		2-Wire Unbundled Copper Loop-Designed without manual service inquiry and facility reservation - Zone 3	I	3	UCL	UCLPW	22.07	44.69	31.55	0.00	0.00						
		Order Coordination for Unbundled Copper Loops (per loop)			UCL	UCLMC		18.92	18.92								
		Order Coordination for Unbundled Copper Loops (per loop)			UCL	UCLMC		18.92	18.92								
		CLEC to CLEC Conversion Charge without outside dispatch (UCL-Des)	I		UCL	UREWO		44.69	31.55								
	4-WIRE COPPER LOOP																
		4-Wire Copper Loop-Designed including manual service inquiry and facility reservation - Zone 1	I	1	UCL	UCL4S	16.65	44.69	31.55	0.00	0.00						
		4-Wire Copper Loop-Designed including manual service inquiry and facility reservation - Zone 2	I	2	UCL	UCL4S	19.22	44.69	31.55	0.00	0.00						
		4-Wire Copper Loop-Designed including manual service inquiry and facility reservation - Zone 3	I	3	UCL	UCL4S	30.55	44.69	31.55	0.00	0.00						
		Order Coordination for Unbundled Copper Loops (per loop)			UCL	UCLMC		18.92	18.92								
		4-Wire Copper Loop-Designed without manual service inquiry and facility reservation - Zone 1	I	1	UCL	UCL4W	16.65	44.69	31.55	0.00	0.00						
		4-Wire Copper Loop-Designed without manual service inquiry and facility reservation - Zone 2	I	2	UCL	UCL4W	19.22	44.69	31.55	0.00	0.00						
		4-Wire Copper Loop-Designed without manual service inquiry and facility reservation - Zone 3	I	3	UCL	UCL4W	30.55	44.69	31.55	0.00	0.00						
		Order Coordination for Unbundled Copper Loops (per loop)			UCL	UCLMC		18.92	18.92								
		CLEC to CLEC conversion Charge without outside dispatch	I		UCL	UREWO		44.69	31.55								
LOOP MODIFICATION																	
		Unbundled Loop Modification, Removal of Load Coils - 2 Wire pair less than or equal to 18k ft, per Unbundled Loop	I		UAL, UHL, UCL, UEQ, ULS, UEA, UEANL, UEPSR, UEPSB	ULM2L		0.00	0.00								
		Unbundled Loop Modification Removal of Load Coils - 4 Wire less than or equal to 18K ft, per Unbundled Loop	I		UHL, UCL, UEA	ULM4L		0.00	0.00								
		Unbundled Loop Modification Removal of Bridged Tap Removal, per Unbundled Loop			UAL, UHL, UCL, UEQ, ULS, UEA, UEANL, UEPSR, UEPSB	ULMBT		17.91									
SUB-LOOPS																	
	Sub-Loop Distribution																
		Sub-Loop - Per Cross Box Location - CLEC Feeder Facility Set-Up			UEANL	USBSA		255.76									
		Sub-Loop - Per Cross Box Location - Per 25 Pair Panel Set-Up			UEANL	USBSB		7.29									
		Sub-Loop - Per Building Equipment Room - CLEC Feeder Facility Set-Up			UEANL	USBSC		175.09									
		Sub-Loop - Per Building Equipment Room - Per 25 Pair Panel Set-Up			UEANL	USBSD		51.61									
		Unbundled Sub-Loops, Riser Cable, 2-Wire per Loop, Working and Spare Loop Activation			UEANL	USBRC	3.61	28.46	3.85	2.20	0.01						
		Unbundled Sub-Loops, Riser Cable, 4-Wire per Loop, Working and Spare Loop Activation			UEANL	USBRD	7.67	31.07	4.79	2.27	0.01						

UNBUNDLED NETWORK ELEMENTS - Georgia														Attachment: 2		Exhibit: A	
CATEGORY		RATE ELEMENTS	Interim	Zone	BCS	USOC	RATES ($)					Svc Order Submitted Elec per LSR	Svc Order Submitted Manually per LSR	Incremental Charge - Manual Svc Order vs. Electronic-1st	Incremental Charge - Manual Svc Order vs. Electronic-Add'l	Incremental Charge - Manual Svc Order vs. Electronic-Disc 1st	Incremental Charge - Manual Svc Order vs. Electronic-Disc Add'l
							Rec	Nonrecurring		Nonrecurring Disconnect		OSS Rates ($)					
								First	Add'l	First	Add'l	SOMEC	SOMAN	SOMAN	SOMAN	SOMAN	SOMAN
		Sub-Loop Distribution Per 2-Wire Analog Voice Grade Loop - Zone 1		1	UEANL	USBN2	6.52	28.46	3.85	2.20	0.01						
		Sub-Loop Distribution Per 2-Wire Analog Voice Grade Loop - Zone 2		2	UEANL	USBN2	10.18	28.46	3.85	2.20	0.01						
		Sub-Loop Distribution Per 2-Wire Analog Voice Grade Loop - Zone 3		3	UEANL	USBN2	19.51	28.46	3.85	2.20	0.01						
		Sub-Loop Distribution Per 4-Wire Analog Voice Grade Loop - Zone 1		1	UEANL	USBN4	5.93	31.07	4.79	2.27	0.01						
		Sub-Loop Distribution Per 4-Wire Analog Voice Grade Loop - Zone 2		2	UEANL	USBN4	9.71	31.07	4.79	2.27	0.01						
		Sub-Loop Distribution Per 4-Wire Analog Voice Grade Loop - Zone 3		3	UEANL	USBN4	18.85	31.07	4.79	2.27	0.01						
		Order Coordination for Unbundled Sub-Loops, per sub-loop pair			UEANL	USBMC		18.92	18.92								
		Sub-Loop 2-Wire Intrabuilding Network Cable (INC)			UEANL	USBR2	3.61	28.46	3.85	2.20	0.01						
		Order Coordination for Unbundled Sub-Loops, per sub-loop pair			UEANL	USBMC		18.92	18.92								
		Sub-Loop 4-Wire Intrabuilding Network Cable (INC)	I		UEANL	USBR4	7.67	31.07	4.79	2.27	0.01						
		Order Coordination for Unbundled Sub-Loops, per sub-loop pair			UEANL	USBMC		18.92	18.92								
		Loop Testing - Basic 1st Half Hour			UEANL	URET1		25.12	25.12								
		Loop Testing - Basic Additional Half Hour			UEANL	URETA		13.62	13.62								
		2 Wire Copper Unbundled Sub-Loop Distribution - Zone 1	I	1	UEF	UCS2X	5.94	28.46	3.85	2.20	0.01						
		2 Wire Copper Unbundled Sub-Loop Distribution - Zone 2	I	2	UEF	UCS2X	7.51	28.46	3.85	2.20	0.01						
		2 Wire Copper Unbundled Sub-Loop Distribution - Zone 3	I	3	UEF	UCS2X	9.22	28.46	3.85	2.20	0.01						
		Order Coordination for Unbundled Sub-Loops, per sub-loop pair			UEF	USBMC		18.92	18.92								
		4 Wire Copper Unbundled Sub-Loop Distribution - Zone 1	I	1	UEF	UCS4X	6.37	31.07	4.79	2.27	0.01						
		4 Wire Copper Unbundled Sub-Loop Distribution - Zone 2	I	2	UEF	UCS4X	6.32	31.07	4.79	2.27	0.01						
		4 Wire Copper Unbundled Sub-Loop Distribution - Zone 3	I	3	UEF	UCS4X	9.10	31.07	4.79	2.27	0.01						
		Order Coordination for Unbundled Sub-Loops, per sub-loop pair			UEF	USBMC		18.92	18.92								
		Loop Testing - Basic 1st Half Hour			UEF	URET1		25.12	25.12								
		Loop Testing - Basic Additional Half Hour			UEF	URETA		13.62	13.62								
	Unbundled Network Terminating Wire (UNTW)																
		Unbundled Network Terminating Wire (UNTW) per Pair			UENTW	UENPP	0.533	25.12	12.28								
	Network Interface Device (NID)																
		Network Interface Device (NID) - 1-2 lines	I		UENTW	UND12		32.86	20.69								
		Network Interface Device (NID) - 1-6 lines	I		UENTW	UND16		56.03	43.86								
		Network Interface Device Cross Connect - 2 W	I		UENTW	UNDC2		2.45	2.45								
		Network Interface Device Cross Connect - 4W			UENTW	UNDC4		2.45	2.45								
UNE OTHER, PROVISIONING ONLY - NO RATE																	
		NID - Dispatch and Service Order for NID installation			UENTW	UNDBX	0.00	0.00									
		Unbundled Sub-Loop Feeder-2 Wire Cross Box Jumper - no rate			UEA,UDN,UCL,UDC	USBFQ	0.00	0.00									
		Unbundled Sub-Loop Feeder-4 Wire Cross Box Jumper - no rate			UEA,USL,UCL,UDL	USBFR	0.00	0.00									
HIGH CAPACITY UNBUNDLED LOCAL LOOP																	
		High Capacity Unbundled Local Loop - DS3 - Per Mile per month			UE3	1L5ND	10.97										
		High Capacity Unbundled Local Loop - DS3 - Facility Termination per month			UE3	UE3PX	253.38	1,753.23	131.90	112.91	75.88						
		High Capacity Unbundled Local Loop - STS-1 - Per Mile per month			UDLSX	1L5ND	10.97										
		High Capacity Unbundled Local Loop - STS-1 - Facility Termination per month			UDLSX	UDLS1	305.42	1,753.23	131.90	112.91	75.88						
LOOP MAKE-UP																	
		Loop Makeup - Preordering Without Reservation, per working or spare facility queried (Manual).			UMK	UMKLW		15.19	15.19								

UNBUNDLED NETWORK ELEMENTS - Georgia														Attachment: 2		Exhibit: A	
CATEGORY		RATE ELEMENTS	Interim	Zone	BCS	USOC	RATES ($)					Svc Order Submitted Elec per LSR	Svc Order Submitted Manually per LSR	Incremental Charge - Manual Svc Order vs. Electronic-1st	Incremental Charge - Manual Svc Order vs. Electronic-Add'l	Incremental Charge - Manual Svc Order vs. Electronic-Disc 1st	Incremental Charge - Manual Svc Order vs. Electronic-Disc Add'l
							Rec	Nonrecurring		Nonrecurring Disconnect		OSS Rates ($)					
								First	Add'l	First	Add'l	SOMEC	SOMAN	SOMAN	SOMAN	SOMAN	SOMAN
		Loop Makeup - Preordering With Reservation, per spare facility queried (Manual).			UMK	UMKLP		19.85	19.85								
		Loop Makeup--With or Without Reservation, per working or spare facility queried (Mechanized)			UMK	UMKMQ		0.82	0.82								
LINE SHARING AND LINE SPLITTING																	
	NOTE 1: The Line Sharing monthly recurring rates for all installations completed from October 02, 2003 through midnight October 01, 2004 shall be billed as follows:																
	NOTE 1: 10/02/2003 – 10/01/2004: 25% of the rate for an unbundled copper loop non-designed ("UCLND")																
	NOTE 1: 10/02/2004 – 10/01/2005: 50% of the rate for UCLND																
	NOTE 1: 10/02/2005 – 10/01/2006: 75% of the rate for UCLND																
	NOTE 1: Above will apply to USOCS: ULSDT and ULSCT																
	****NOTE 2: The Line Sharing monthly recurring rates with USOCs ULSDC and ULSCC applies only to circuits installed and inservice on or before October 1, 2003**																
	LINE SHARING																
	SPLITTERS-CENTRAL OFFICE BASED																
		Line Sharing Splitter, per System 96 Line Capacity			ULS	ULSDA	131.00	0.00	0.00	0.00	0.00						
		Line Sharing Splitter, per System 24 Line Capacity			ULS	ULSDB	32.00	0.00	0.00	0.00	0.00						
		Line Sharing Splitter, Per System, 8 Line Capacity			ULS	ULSD8	11.00	0.00	0.00	0.00	0.00						
		Line Sharing-DLEC Owned Splitter in CO-CFA activaton-deactivation (per LSOD)			ULS	ULSDG		66.34	0.00	51.20	0.00						
	END USER ORDERING-CENTRAL OFFICE BASED LINE SHARING																
		Line Sharing - per Line Activation (BST Owned splitter) - OBSOLETE see **NOTE 2			ULS	ULSDC	0.61	10.51	7.70	7.00	4.20						
		Line Share Service, TRO per line activation, BST owned splitter - Central Office Located (50% of UCLND) - please see NOTE 1 (E:10/2/2004)			ULS	ULSDT	5.51	10.51	7.70	7.00	4.20						
		Line Share Service, TRO per line activation, BST owned splitter - Central Office Located (75% of UCLND) - please see NOTE 1 (E:10/2/2005)			ULS	ULSDT	8.27	10.51	7.70	7.00	4.20						
		Line Sharing - per Subsequent Activity per Line Rearrangement(BST Owned Splitter			ULS	ULSDS		36.23	13.23	16.94	1.69						
		Line Sharing - per Subsequent Activity per Line Rearrangement(DLEC Owned Splitter			ULS	ULSCS		36.23	13.23	16.94	1.69						
		Line Sharing - per Line Activation (DLEC owned Splitter) - OBSOLETE see **NOTE 2			ULS	ULSCC	0.61	17.82	9.36	8.53	4.30						
		Line Share Service, TRO per line activation, CLEC owned splitter - Central Office Located (50% of UCLND) - please see NOTE 1 (E:10/2/2004)			ULS	ULSCT	5.51	17.82	9.36	8.53	4.30						
		Line Share Service, TRO per line activation, CLEC owned splitter - Central Office Located (75% of UCLND) - please see NOTE 1 (E:10/2/2005)			ULS	ULSCT	8.27	17.82	9.36	8.53	4.30						
	LINE SPLITTING																
	MAINTENANCE																
		No Trouble Found - per 1/2 hour increments - Basic						80.00	55.00								
		No Trouble Found - per 1/2 hour increments - Overtime						120.00	82.50								
		No Trouble Found - per 1/2 hour increments - Premium						160.00	110.00								
UNBUNDLED DEDICATED TRANSPORT																	
	INTEROFFICE CHANNEL - DEDICATED TRANSPORT																
		Interoffice Channel - Dedicated Transport - 2-Wire Voice Grade - Per Mile per month			U1TVX	1L5XX	0.0057										
		Interoffice Channel - Dedicated Transport- 2- Wire Voice Grade - Facility Termination			U1TVX	U1TV2	12.87	48.46	19.48	16.58	5.00						
		Interoffice Channel - Dedicated Transpor t- 2-Wire Voice Grade Rev Bat. - Per Mile per month			U1TVX	1L5XX	0.0057										
		Interoffice Channel - Dedicated Transport- 2- Wire VG Rev Bat. - Facility Termination			U1TVX	U1TR2	12.87	48.46	19.48	16.58	5.00						
		Interoffice Channel - Dedicated Transport - 4-Wire Voice Grade - Per Mile per month			U1TVX	1L5XX	0.0057										
		Interoffice Channel - Dedicated Transport - 4- Wire Voice Grade - Facility Termination			U1TVX	U1TV4	10.78	48.46	19.48	16.58	5.00						

UNBUNDLED NETWORK ELEMENTS - Georgia														Attachment: 2		Exhibit: A	
CATEGORY		RATE ELEMENTS	Interim	Zone	BCS	USOC	RATES ($)					Svc Order Submitted Elec per LSR	Svc Order Submitted Manually per LSR	Incremental Charge - Manual Svc Order vs. Electronic-1st	Incremental Charge - Manual Svc Order vs. Electronic-Add'l	Incremental Charge - Manual Svc Order vs. Electronic-Disc 1st	Incremental Charge - Manual Svc Order vs. Electronic-Disc Add'l
							Rec	Nonrecurring		Nonrecurring Disconnect		OSS Rates ($)					
								First	Add'l	First	Add'l	SOMEC	SOMAN	SOMAN	SOMAN	SOMAN	SOMAN
		Interoffice Channel - Dedicated Transport - 56 kbps - per mile per month			U1TDX	1L5XX	0.0057										
		Interoffice Channel - Dedicated Transport - 56 kbps - Facility Termination			U1TDX	U1TD5	7.83	48.46	19.48	16.58	5.00						
		Interoffice Channel - Dedicated Transport - 64 kbps - per mile per month			U1TDX	1L5XX	0.0057										
		Interoffice Channel - Dedicated Transport - 64 kbps - Facility Termination			U1TDX	U1TD6	7.83	48.46	19.48	16.58	5.00						
		Interoffice Channel - Dedicated Channel - DS1 - Per Mile per month			U1TD1	1L5XX	0.1154										
		Interoffice Channel - Dedicated Tranport - DS1 - Facility Termination			U1TD1	U1TF1	34.19	111.03	80.28	31.36	21.73						
		Interoffice Channel - Dedicated Transport - DS3 - Per Mile per month			U1TD3	1L5XX	2.53										
		Interoffice Channel - Dedicated Transport - DS3 - Facility Termination per month			U1TD3	U1TF3	342.02	320.47	86.32	66.77	52.81						
		Interoffice Channel - Dedicated Transport - STS-1 - Per Mile per month			U1TS1	1L5XX	2.53										
		Interoffice Channel - Dedicated Transport - STS-1 - Facility Termination			U1TS1	U1TFS	358.67	320.47	86.32	66.77	52.81						
SIGNALING (CCS7)																	
		CCS7 Signaling Termination, Per STP Port			UDB	PT8SX	108.80										
		CCS7 Signaling Connection, Per link (A link) (same as E.3.1)			UDB	TPP6A	8.73	34.77	34.77	16.91	16.91						
		CCS7 Signaling Connection, Per link (B link) (also known as D link) (same as E.3.1)			UDB	TPP6B	8.73	34.77	34.77	16.91	16.91						
		CCS7 Signaling Connection, Per link (A link) (same as E.3.1)			UDB	TPP9A	8.73	34.77	34.77	16.91	16.91						
		CCS7 Signaling Connection-B link(also known as D link) per month (same as E.3.1)			UDB	TPP9B	8.73	34.77	34.77	16.91	16.91						
		CCS7 Signaling Usage Surrogate, per link			UDB	STU56	907.44										
		CCS7 Signaling Point Code, Establishment or Change, per STP affected			UDB	CCAPO		28.15	28.15	33.32	33.32						
E911 SERVICE																	
		Local Channel - Dedicated - 2-wr Voice Grade					7.74	121.07	53.30	46.40	13.37						
		Interoffice Transport - Dedicated - 2-wr Voice Grade Per Mile					0.0057										
		Interoffice Transport - Dedicated - 2-wr Voice Grade Per Facility Termination					12.87	48.46	19.48	16.58	5.00						
		Local Channel - Dedicated - DS1 - Zone 1					18.47	149.46	111.20	40.36	26.12						
		Local Channel - Dedicated - DS1 - Zone 2					56.30	149.46	111.20	40.36	26.12						
		Local Channel - Dedicated - DS1 - Zone 3					164.70	149.46	111.20	40.36	26.12						
		Interoffice Transport - Dedicated - DS1 Per Mile					0.1154										
		Interoffice Transport - Dedicated - DS1 Per Facility Termination					34.19	111.03	80.28	31.36	21.73						
ENHANCED EXTENDED LINK (EELs)																	
	NOTE: The monthly recurring and non-recurring charges below will apply and the Switch-As-Is Charge will not apply for UNE combinations provisioned as ' Ordinarily Combined' Network Elements.																
	NOTE: The monthly recurring and the Switch-As-Is Charge and not the non-recurring charges below will apply for UNE combinations provisioned as ' Currently Combined' Network Elements.																
	EXTENTED 2-WIRE VOICE GRADE EXTENDED LOOP WITH DEDICATED DS1 INTEROFFICE TRANSPORT																
		First 2-Wire VG Loop (SL2) in Combination - Zone 1		1	UNCVX	UEAL2	11.57	195.94	36.38	18.42	6.86						
		First 2-Wire VG Loop (SL2) in Combination - Zone 2		2	UNCVX	UEAL2	16.95	195.94	36.38	18.42	6.86						
		First 2-Wire VG Loop (SL2) in Combination - Zone 3		3	UNCVX	UEAL2	33.08	195.94	36.38	18.42	6.86						
		Interoffice Transport - Dedicated - DS1 combination - Per Mile per month			UNC1X	1L5XX	0.1154										
		Interoffice Transport - Dedicated - DS1 combination - Facility Termination per month			UNC1X	U1TF1	34.19	87.76	45.73	43.80	27.97						
		1/0 Channelization System in combination Per Month			UNC1X	MQ1	69.75	86.10									
		Voice Grade COCI - Per Month			UNCVX	1D1VG	0.4689	27.33	2.90	16.86	1.04						
		Each Additional 2-Wire VG Loop (SL 2) in Combination - Zone 1		1	UNCVX	UEAL2	11.57	195.94	36.38	18.42	6.86						
		Each Additional 2-Wire VG Loop (SL 2) in Combination - Zone 2		2	UNCVX	UEAL2	16.95	195.94	36.38	18.42	6.86						

UNBUNDLED NETWORK ELEMENTS - Georgia														Attachment: 2		Exhibit: A	
CATEGORY		RATE ELEMENTS	Interim	Zone	BCS	USOC	RATES ($)					Svc Order Submitted Elec per LSR	Svc Order Submitted Manually per LSR	Incremental Charge - Manual Svc Order vs. Electronic-1st	Incremental Charge - Manual Svc Order vs. Electronic-Add'l	Incremental Charge - Manual Svc Order vs. Electronic-Disc 1st	Incremental Charge - Manual Svc Order vs. Electronic-Disc Add'l
							Rec	Nonrecurring		Nonrecurring Disconnect		OSS Rates ($)					
								First	Add'l	First	Add'l	SOMEC	SOMAN	SOMAN	SOMAN	SOMAN	SOMAN
		Each Additional 2-Wire VG Loop (SL 2) in Combination - Zone 3		3	UNCVX	UEAL2	33.08	195.94	36.38	18.42	6.86						
		Voice Grade COCI - Per Month			UNCVX	1D1VG	0.4689	27.33	2.90	16.86	1.04						
		Nonrecurring Currently Combined Network Elements Switch -As-Is Charge			UNC1X	UNCCC		5.70	5.70	6.61	6.61						
	EXTENDED 4-WIRE VOICE GRADE EXTENDED LOOP WITH DEDICATED DS1 INTEROFFICE TRANSPORT																
		First 4-Wire Analog Voice Grade Loop in Combination - Zone 1		1	UNCVX	UEAL4	17.80	195.94	36.38	18.42	6.86						
		First 4-Wire Analog Voice Grade Loop in Combination - Zone 2		2	UNCVX	UEAL4	21.68	195.94	36.38	18.42	6.86						
		First 4-Wire Analog Voice Grade Loop in Combination - Zone 3		3	UNCVX	UEAL4	30.25	195.94	36.38	18.42	6.86						
		Interoffice Transport - Dedicated - DS1 combination - Per Mile Per Month			UNC1X	1L5XX	0.1154										
		Interoffice Transport - Dedicated - DS1 - Facility Termination Per Month			UNC1X	U1TF1	34.19	87.76	45.73	43.80	27.97						
		1/0 Channel System in combination Per Month			UNC1X	MQ1	69.75	86.10									
		Voice Grade COCI in combination - per month			UNCVX	1D1VG	0.4689	27.33	2.90	16.86	1.04						
		Additional 4-Wire Analog Voice Grade Loop in same DS1 Interoffice Transport Combination - Zone 1		1	UNCVX	UEAL4	17.80	195.94	36.38	18.42	6.86						
		Additional 4-Wire Analog Voice Grade Loop in same DS1 Interoffice Transport Combination - Zone 2		2	UNCVX	UEAL4	21.68	195.94	36.38	18.42	6.86						
		Additional 4-Wire Analog Voice Grade Loop in same DS1 Interoffice Transport Combination - Zone 3		3	UNCVX	UEAL4	30.25	195.94	36.38	18.42	6.86						
		Additional Voice Grade COCI in combination - per month			UNCVX	1D1VG	0.4689	27.33	2.90	16.86	1.04						
		Nonrecurring Currently Combined Network Elements Switch -As-Is Charge			UNC1X	UNCCC		5.70	5.70	6.61	6.61						
	EXTENDED 4-WIRE 56 KBPS EXTENDED DIGITAL LOOP WITH DEDICATED DS1 INTEROFFICE TRANSPORT																
		First 4-Wire 56Kbps Digital Grade Loop in Combination - Zone 1		1	UNCDX	UDL56	21.86	195.94	36.38	18.42	6.86						
		First 4-Wire 56Kbps Digital Grade Loop in Combination - Zone 2		2	UNCDX	UDL56	28.36	195.94	36.38	18.42	6.86						
		First 4-Wire 56Kbps Digital Grade Loop in Combination - Zone 3		3	UNCDX	UDL56	38.22	195.94	36.38	18.42	6.86						
		Interoffice Transport - Dedicated - DS1 combination - Per Mile Per Month			UNC1X	1L5XX	0.1154										
		Interoffice Transport - Dedicated - DS1 - combination Facility Termination Per Month			UNC1X	U1TF1	34.19	87.76	45.73	43.80	27.97						
		1/0 Channel System in combination Per Month			UNC1X	MQ1	69.75	86.10									
		OCU-DP COCI (data) per month (2.4-64kbs)			UNCDX	1D1DD	0.9963	27.33	2.90	16.86	1.04						
		Additional 4-Wire 56Kbps Digital Grade Loop in same DS1 Interoffice Transport Combination - Zone 1		1	UNCDX	UDL56	21.86	195.94	36.38	18.42	6.86						
		Additional 4-Wire 56Kbps Digital Grade Loop in same DS1 Interoffice Transport Combination - Zone 2		2	UNCDX	UDL56	28.36	195.94	36.38	18.42	6.86						
		Additional 4-Wire 56Kbps Digital Grade Loop in same DS1 Interoffice Transport Combination - Zone 3		3	UNCDX	UDL56	38.22	195.94	36.38	18.42	6.86						
		Additional OCU-DP COCI (data) - in combination per month (2.4-64kbs)			UNCDX	1D1DD	0.9963	27.33	2.90	16.86	1.04						
		Nonrecurring Currently Combined Network Elements Switch -As-Is Charge			UNC1X	UNCCC		5.70	5.70	6.61	6.61						
	EXTENDED 4-WIRE 64 KBPS EXTENDED DIGITAL LOOP WITH DEDICATED DS1 INTEROFFICE TRANSPORT																
		First 4-Wire 64Kbps Digital Grade Loop in Combination - Zone 1		1	UNCDX	UDL64	21.86	195.94	36.38	18.42	6.86						
		First 4-Wire 64Kbps Digital Grade Loop in Combination - Zone 2		2	UNCDX	UDL64	28.36	195.94	36.38	18.42	6.86						
		First 4-Wire 64Kbps Digital Grade Loop in Combination - Zone 3		3	UNCDX	UDL64	38.22	195.94	36.38	18.42	6.86						
		Interoffice Transport - Dedicated - DS1 combination - Per Mile Per Month			UNC1X	1L5XX	0.1154										

UNBUNDLED NETWORK ELEMENTS - Georgia														Attachment: 2		Exhibit: A	
CATEGORY		RATE ELEMENTS	Interim	Zone	BCS	USOC	RATES ($)					Svc Order Submitted Elec per LSR	Svc Order Submitted Manually per LSR	Incremental Charge - Manual Svc Order vs. Electronic-1st	Incremental Charge - Manual Svc Order vs. Electronic-Add'l	Incremental Charge - Manual Svc Order vs. Electronic-Disc 1st	Incremental Charge - Manual Svc Order vs. Electronic-Disc Add'l
							Rec	Nonrecurring		Nonrecurring Disconnect		OSS Rates ($)					
								First	Add'l	First	Add'l	SOMEC	SOMAN	SOMAN	SOMAN	SOMAN	SOMAN
		interoffice Transport - Dedicated - DS1 combination - Facility Termination Per Month			UNC1X	U1TF1	34.19	87.76	45.73	43.80	27.97						
		1/0 Channel System in combination Per Month			UNC1X	MQ1	69.75	86.10									
		OCU-DP COCI (data) - in combination - per month (2.4-64kbs)			UNCDX	1D1DD	0.9963	27.33	2.90	16.86	1.04						
		Additional 4-Wire 64Kbps Digital Grade Loop in same DS1 Interoffice Transport Combination - Zone 1		1	UNCDX	UDL64	21.86	195.94	36.38	18.42	6.86						
		Additional 4-Wire 64Kbps Digital Grade Loop in same DS1 Interoffice Transport Combination - Zone 2		2	UNCDX	UDL64	28.36	195.94	36.38	18.42	6.86						
		Additional 4-Wire 64Kbps Digital Grade Loop in same DS1 Interoffice Transport Combination - Zone 3		3	UNCDX	UDL64	38.22	195.94	36.38	18.42	6.86						
		Additional OCU-DP COCI (data) - in combination - per month (2.4-64kbs)			UNCDX	1D1DD	0.9963	27.33	2.90	16.86	1.04						
		Nonrecurring Currently Combined Network Elements Switch -As-Is Charge			UNC1X	UNCCC		5.70	5.70	6.61	6.61						
	EXTENDED 4-WIRE DS1 DIGITAL EXTENDED LOOP WITH DEDICATED DS1 INTEROFFICE TRANSPORT																
		4-Wire DS1 Digital Loop in Combination - Zone 1		1	UNC1X	USLXX	41.02	209.45	70.44	37.91	6.86						
		4-Wire DS1 Digital Loop in Combination - Zone 2		2	UNC1X	USLXX	46.41	209.45	70.44	37.91	6.86						
		4-Wire DS1 Digital Loop in Combination - Zone 3		3	UNC1X	USLXX	62.03	209.45	70.44	37.91	6.86						
		Interoffice Transport - Dedicated - DS1 combination - Per Mile Per Month			UNC1X	1L5XX	0.1154										
		Interoffice Transport - Dedicated - DS1 combination - Facility Termination Per Month			UNC1X	U1TF1	34.19	87.76	45.73	43.80	27.97						
		Nonrecurring Currently Combined Network Elements Switch -As-Is Charge			UNC1X	UNCCC		5.70	5.70	6.61	6.61						
	EXTENDED 4-WIRE DS1 DIGITAL EXTENDED LOOP WITH DEDICATED DS3 INTEROFFICE TRANSPORT																
		First DS1Loop in Combination - Zone 1		1	UNC1X	USLXX	41.02	209.45	70.44	37.91	6.86						
		First DS1Loop in Combination - Zone 2		2	UNC1X	USLXX	46.41	209.45	70.44	37.91	6.86						
		First DS1Loop in Combination - Zone 3		3	UNC1X	USLXX	62.03	209.45	70.44	37.91	6.86						
		Interoffice Transport - Dedicated - DS3 combination - Per Mile Per Month			UNC3X	1L5XX	2.53										
		Interoffice Transport - Dedicated - DS3 - Facility Termination per month			UNC3X	U1TF3	342.02	325.91	77.07	49.56	32.88						
		3/1Channel System in combination per month			UNC3X	MQ3	121.90										
		DS1 COCI in combination per month			UNC1X	UC1D1	7.35	27.33	2.90	16.86	1.04						
		Additional DS1Loop in DS3 Interoffice Transport Combination - Zone 1		1	UNC1X	USLXX	41.02	209.45	70.44	37.91	6.86						
		Additional DS1Loop in DS3 Interoffice Transport Combination - Zone 2		2	UNC1X	USLXX	46.41	209.45	70.44	37.91	6.86						
		Additional DS1Loop in DS3 Interoffice Transport Combination - Zone 3		3	UNC1X	USLXX	62.03	209.45	70.44	37.91	6.86						
		Additoinal DS1 COCI in combination per month			UNC1X	UC1D1	7.35	27.33	2.90	16.86	1.04						
		Nonrecurring Currently Combined Network Elements Switch -As-Is Charge			UNC3X	UNCCC		5.70	5.70	6.61	6.61						
	EXTENDED 2-WIRE VOICE GRADE EXTENDED LOOP/ 2 WIRE VOICE GRADE INTEROFFICE TRANSPORT																
		2-WireVG Loop in combination - Zone 1		1	UNCVX	UEAL2	11.57	195.94	36.38	18.42	6.86						
		2-WireVG Loop in combination - Zone 2		2	UNCVX	UEAL2	16.95	195.94	36.38	18.42	6.86						
		2-WireVG Loop in combination - Zone 3		3	UNCVX	UEAL2	33.08	195.94	36.38	18.42	6.86						
		Interoffice Transport - 2-wire VG - Dedicated- Per Mile Per Month			UNCVX	1L5XX	0.0057										
		Interoffice Transport - 2-wire VG - Dedicated - Facility Termination per month			UNCVX	U1TV2	12.87	66.53	33.61	43.42	27.60						
		Nonrecurring Currently Combined Network Elements Switch -As-Is Charge			UNCVX	UNCCC		5.70	5.70	6.61	6.61						
	EXTENDED 4-WIRE VOICE GRADE EXTENDED LOOP/ 4 WIRE VOICE GRADE INTEROFFICE TRANSPORT																
		4-WireVG Loop in combination - Zone 1		1	UNCVX	UEAL4	17.80	195.94	36.38	18.42	6.86						
		4-WireVG Loop in combination - Zone 2		2	UNCVX	UEAL4	21.68	195.94	36.38	18.42	6.86						
		4-WireVG Loop in combination - Zone 3		3	UNCVX	UEAL4	30.25	195.94	36.38	18.42	6.86						
		Interoffice Transport - 4-wire VG - Dedicated - Per Mile Per Month			UNCVX	1L5XX	0.0057										

UNBUNDLED NETWORK ELEMENTS - Georgia														Attachment: 2		Exhibit: A	
CATEGORY		RATE ELEMENTS	Interim	Zone	BCS	USOC	RATES ($)					Svc Order Submitted Elec per LSR	Svc Order Submitted Manually per LSR	Incremental Charge - Manual Svc Order vs. Electronic-1st	Incremental Charge - Manual Svc Order vs. Electronic-Add'l	Incremental Charge - Manual Svc Order vs. Electronic-Disc 1st	Incremental Charge - Manual Svc Order vs. Electronic-Disc Add'l
							Rec	Nonrecurring		Nonrecurring Disconnect		OSS Rates ($)					
								First	Add'l	First	Add'l	SOMEC	SOMAN	SOMAN	SOMAN	SOMAN	SOMAN
		Interoffice Transport - 4-wire VG - Dedicated - Facility Termination per month			UNCVX	U1TV4	10.78	66.53	33.61	43.42	27.60						
		Nonrecurring Currently Combined Network Elements Switch -As-Is Charge			UNCVX	UNCCC		5.70	5.70	6.61	6.61						
	EXTENDED DS3 DIGITAL EXTENDED LOOP WITH DEDICATED DS3 INTEROFFICE TRANSPORT																
		DS3 Local Loop in combination - per mile per month			UNC3X	1L5ND	10.97										
		DS3 Local Loop in combination - Facility Termination per month			UNC3X	UE3PX	253.38	1,260.47	628.84	41.53	20.76						
		Interoffice Transport - Dedicated - DS3 - Per Mile per month			UNC3X	1L5XX	2.53										
		Interoffice Transport - Dedicated - DS3 combination - Facility Termination per month			UNC3X	U1TF3	342.02	325.91	77.07	49.56	32.88						
		Nonrecurring Currently Combined Network Elements Switch -As-Is Charge			UNC3X	UNCCC		5.70	5.70	6.61	6.61						
	EXTENDED STS-1 DIGITAL EXTENDED LOOP WITH DEDICATED STS-1 INTEROFFICE TRANSPORT																
		STS-1 Local Lolp in combination - per mile per month			UNCSX	1L5ND	10.97										
		STS-1 Local Loop in combination - Facility Termination per month			UNCSX	UDLS1	305.42	1,260.47	628.84	41.53	20.76						
		Interoffice Transport - Dedicated - STS-1 combination - per mile per month			UNCSX	1L5XX	2.53										
		Interoffice Transport - Dedicated - STS-1 combination - Facility Termination per month			UNCSX	U1TFS	358.67	325.91	77.07	49.56	32.88						
		Nonrecurring Currently Combined Network Elements Switch -As-Is Charge			UNCSX	UNCCC		5.70	5.70	6.61	6.61						
	EXTENDED 2-WIRE ISDN EXTENDED LOOP WITH DS1 INTEROFFICE TRANSPORT																
		First 2-Wire ISDN Loop in Combination - Zone 1		1	UNCNX	U1L2X	19.82	195.94	36.38	18.42	6.86						
		First 2-Wire ISDN Loop in Combination - Zone 2		2	UNCNX	U1L2X	26.26	195.94	36.38	18.42	6.86						
		First 2-Wire ISDN Loop in Combination - Zone 3		3	UNCNX	U1L2X	42.17	195.94	36.38	18.42	6.86						
		Interoffice Transport - Dedicated - DS1 combination - per mile per month			UNC1X	1L5XX	0.1154										
		Interoffice Transport - Dedicated - DS1 combination - Facility Termination per month			UNC1X	U1TF1	34.19	87.76	45.73	43.80	27.97						
		1/0 Channel System in combination - per month			UNC1X	MQ1	69.75	86.10									
		2-wire ISDN COCI (BRITE) - in combination - per month			UNCNX	UC1CA	1.66	27.33	2.90	16.86	1.04						
		Additional 2-wire ISDN Loop in same DS1Interoffice Transport Combination - Zone 1		1	UNCNX	U1L2X	19.82	195.94	36.38	18.42	6.86						
		Additional 2-wire ISDN Loop in same DS1Interoffice Transport Combination - Zone 2		2	UNCNX	U1L2X	26.26	195.94	36.38	18.42	6.86						
		Additional 2-wire ISDN Loop in same DS1Interoffice Transport Combination - Zone 3		3	UNCNX	U1L2X	42.17	195.94	36.38	18.42	6.86						
		Additional 2-wire ISDN COCI (BRITE) - in combination- per month			UNCNX	UC1CA	1.66	27.33	2.90	16.86	1.04						
		Nonrecurring Currently Combined Network Elements Switch -As-Is Charge			UNC1X	UNCCC		5.70	5.70	6.61	6.61						
	EXTENDED 4-WIRE DS1 DIGITAL EXTENDED LOOP WITH DEDICATED STS-1 INTEROFFICE TRANSPORT																
		First DS1 Loop Combination - Zone 1		1	UNC1X	USLXX	41.02	209.45	70.44	37.91	6.86						
		First DS1 Loop Combination - Zone 2		2	UNC1X	USLXX	46.41	209.45	70.44	37.91	6.86						
		First DS1 Loop Combination - Zone 3		3	UNC1X	USLXX	62.03	209.45	70.44	37.91	6.86						
		Interoffice Transport - Dedicated - STS-1 combination - Per Mile Per Month			UNCSX	1L5XX	2.53										
		Interoffice Transport - Dedicated - STS-1 combination - Facility Termination per month			UNCSX	U1TFS	358.67	325.91	77.07	49.56	32.88						
		3/1 Channel System in combination per month			UNCSX	MQ3	121.90										
		DS1 COCI in combination per month			UNC1X	UC1D1	7.35	27.33	2.90	16.86	1.04						
		Additional DS1Loop in the same STS-1 Interoffice Transport Combination - Zone 1		1	UNC1X	USLXX	41.02	209.45	70.44	37.91	6.86						
		Additional DS1Loop in the same STS-1 Interoffice Transport Combination - Zone 2		2	UNC1X	USLXX	46.41	209.45	70.44	37.91	6.86						
		Additional DS1Loop in the same STS-1 Interoffice Transport Combination - Zone 3		3	UNC1X	USLXX	62.03	209.45	70.44	37.91	6.86						

UNBUNDLED NETWORK ELEMENTS - Georgia														Attachment: 2		Exhibit: A	
CATEGORY		RATE ELEMENTS	Interim	Zone	BCS	USOC	RATES ($)					Svc Order Submitted Elec per LSR	Svc Order Submitted Manually per LSR	Incremental Charge - Manual Svc Order vs. Electronic-1st	Incremental Charge - Manual Svc Order vs. Electronic-Add'l	Incremental Charge - Manual Svc Order vs. Electronic-Disc 1st	Incremental Charge - Manual Svc Order vs. Electronic-Disc Add'l
							Rec	Nonrecurring		Nonrecurring Disconnect		OSS Rates ($)					
								First	Add'l	First	Add'l	SOMEC	SOMAN	SOMAN	SOMAN	SOMAN	SOMAN
		DS1 COCI in combination per month			UNC1X	UC1D1	7.35	27.33	2.90	16.86	1.04						
		Nonrecurring Currently Combined Network Elements Switch -As-Is Charge			UNCSX	UNCCC		5.70	5.70	6.61	6.61						
	EXTENDED 4-WIRE 56 KBPS DIGITAL EXTENDED LOOP WITH 56 KBPS INTEROFFICE TRANSPORT																
		4-wire 56 kbps Local Loop in combination - Zone 1		1	UNCDX	UDL56	21.86	195.94	36.38	18.42	6.86						
		4-wire 56 kbps Local Loop in combination - Zone 2		2	UNCDX	UDL56	28.36	195.94	36.38	18.42	6.86						
		4-wire 56 kbps Local Loop in combination - Zone 3		3	UNCDX	UDL56	38.22	195.94	36.38	18.42	6.86						
		Interoffice Transport - Dedicated - 4-wire 56 kbps combination - Per Mile per month			UNCDX	1L5XX	0.0057										
		Interoffice Transport - Dedicated - 4-wire 56 kbps combination - Facility Termination per month			UNCDX	U1TD5	7.83	66.53	33.61	43.42	27.60						
		Nonrecurring Currently Combined Network Elements Switch -As-Is Charge			UNCDX	UNCCC		5.70	5.70	6.61	6.61						
	EXTENDED 4-WIRE 64 KBPS DIGITAL EXTENDED LOOP WITH 64 KBPS INTEROFFICE TRANSPORT																
		4-wire 64 kbps Lcoal Loop in Combination - Zone 1		1	UNCDX	UDL64	21.86	195.94	36.38	18.42	6.86						
		4-wire 64 kbps Lcoal Loop in Combination - Zone 2		2	UNCDX	UDL64	28.36	195.94	36.38	18.42	6.86						
		4-wire 64 kbps Lcoal Loop in Combination - Zone 3		3	UNCDX	UDL64	38.22	195.94	36.38	18.42	6.86						
		Interoffice Transport - Dedicated - 4-wire 64 kbps combination - Per Mile per month			UNCDX	1L5XX	0.0057										
		Interoffice Transport - Dedicated - 4-wire 64 kbps combination - Facility Termination per month			UNCDX	U1TD6	7.83	66.53	33.61	43.42	27.60						
		Nonrecurring Currently Combined Network Elements Switch -As-Is Charge			UNCDX	UNCCC		5.70	5.70	6.61	6.61						
	EXTENDED 2-WIRE VOICE GRADE LOOP WITH DS1 INTEROFFICE TRANSPORT w/ 3/1 MUX																
		First 2-wire VG Loop (SL2) in Combination - Zone 1		1	UNCVX	UEAL2	11.57	195.94	36.38	18.42	6.86						
		First 2-wire VG Loop (SL2) in Combination - Zone 2		2	UNCVX	UEAL2	16.95	195.94	36.38	18.42	6.86						
		First 2-wire VG Loop (SL2) in Combination - Zone 3		3	UNCVX	UEAL2	33.08	195.94	36.38	18.42	6.86						
		First Interoffice Transport - Dedicated - DS1 combination - Per Mile			UNC1X	1L5XX	0.1154										
		First Interoffice Transport - Dedicated - DS1 combination - Facility Termination per month			UNC1X	U1TF1	34.19	87.76	45.73	43.80	27.97						
		Per each DS1 Channelization System Per Month			UNC1X	MQ1	69.75	86.10									
		Per each Voice Grade COCI - Per Month per month			UNCVX	1D1VG	0.4689	27.33	2.90	16.86	1.04						
		3/1 Channel System in combination per month			UNC3X	MQ3	121.90										
		Per each DS1 COCI in combination per month			UNC1X	UC1D1	7.35	27.33	2.90	16.86	1.04						
		Each Additional 2-Wire VG Loop(SL 2) in the same DS1 Interoffice Transport Combination - Zone 1		1	UNCVX	UEAL2	11.57	195.94	36.38	18.42	6.86						
		Each Additional 2-Wire VG Loop(SL2) in the same DS1 Interoffice Transport Combination - Zone 2		2	UNCVX	UEAL2	16.95	195.94	36.38	18.42	6.86						
		Each Additional 2-Wire VG Loop(SL2) in the same DS1 Interoffice Transport Combination - Zone 3		3	UNCVX	UEAL2	33.08	195.94	36.38	18.42	6.86						
		Each Additional Voice Grade COCI in combination - per month			UNCVX	1D1VG	0.4689	27.33	2.90	16.86	1.04						
		Each Additional DS1 Interoffice Channel per mile in same 3/1 Channel System per month			UNC1X	1L5XX	0.1154										
		Each Additional DS1 Interoffice Channel Facility Termination in same 3/1 Channel System per month			UNC1X	U1TF1	34.19	87.76	45.73	43.80	27.97						
		Each Additional DS1 COCI combination per month			UNC1X	UC1D1	7.35	27.33	2.90	16.86	1.04						
		Nonrecurring Currently Combined Network Elements Switch -As-Is Charge			UNC1X	UNCCC		5.70	5.70	6.61	6.61						
	EXTENDED 4-WIRE VOICE GRADE LOOP WITH DEDICATED DS1 INTEROFFICE TRANSPORT w/ 3/1 MUX																
		First 4-Wire Analog Voice Grade Local Loop in Combination - Zone 1		1	UNCVX	UEAL4	17.80	195.94	36.38	18.42	6.86						
		First 4-Wire Analog Voice Grade Local Loop in Combination - Zone 2		2	UNCVX	UEAL4	21.68	195.94	36.38	18.42	6.86						
		First 4-Wire Analog Voice Grade Local Loop in Combination - Zone 3		3	UNCVX	UEAL4	30.25	195.94	36.38	18.42	6.86						
		First Interoffice Transport - Dedicated - DS1 combination - Per Mile Per Month			UNC1X	1L5XX	0.1154										

UNBUNDLED NETWORK ELEMENTS - Georgia														Attachment: 2		Exhibit: A	
CATEGORY		RATE ELEMENTS	Interim	Zone	BCS	USOC	RATES ($)					Svc Order Submitted Elec per LSR	Svc Order Submitted Manually per LSR	Incremental Charge - Manual Svc Order vs. Electronic-1st	Incremental Charge - Manual Svc Order vs. Electronic-Add'l	Incremental Charge - Manual Svc Order vs. Electronic-Disc 1st	Incremental Charge - Manual Svc Order vs. Electronic-Disc Add'l
							Rec	Nonrecurring		Nonrecurring Disconnect		OSS Rates ($)					
								First	Add'l	First	Add'l	SOMEC	SOMAN	SOMAN	SOMAN	SOMAN	SOMAN
		First Interoffice Transport - Dedicated - DS1 - Facility Termination Per Month			UNC1X	U1TF1	34.19	87.76	45.73	43.80	27.97						
		Per each 1/0 Channel System in combination Per Month			UNC1X	MQ1	69.75	86.10									
		Per each Voice Grade COCI in combination - per month			UNCVX	1D1VG	0.4689	27.33	2.90	16.86	1.04						
		3/1 Channel System in combination per month			UNC3X	MQ3	121.90										
		Per each DS1 COCI in combination per month			UNC1X	UC1D1	7.35	27.33	2.90	16.86	1.04						
		Additional 4-Wire Analog Voice Grade Loop in same DS1 Interoffice Transport Combination - Zone 1		1	UNCVX	UEAL4	17.80	195.94	36.38	18.42	6.86						
		Additional 4-Wire Analog Voice Grade Loop in same DS1 Interoffice Transport Combination - Zone 2		2	UNCVX	UEAL4	21.68	195.94	36.38	18.42	6.86						
		Additional 4-Wire Analog Voice Grade Loop in same DS1 Interoffice Transport Combination - Zone 3		3	UNCVX	UEAL4	30.25	195.94	36.38	18.42	6.86						
		Each Additional DS1 Interoffice Channel per mile in same 3/1 Channel System per month			UNC1X	1L5XX	0.1154										
		Each Additional DS1 Interoffice Channel Facility Termination in same 3/1 Channel System per month			UNC1X	U1TF1	34.19	87.76	45.73	43.80	27.97						
		Additional Voice Grade COCI - in combination - per month			UNCVX	1D1VG	0.4689	27.33	2.90	16.86	1.04						
		Nonrecurring Currently Combined Network Elements Switch -As-Is Charge			UNC1X	UNCCC		5.70	5.70	6.61	6.61						
	EXTENDED 4-WIRE 56 KBPS DIGITAL EXTENDED LOOP WITH 56 KBPS INTEROFFICE TRANSPORT w/ 3/1 MUX																
		First 4-Wire 56Kbps Digital Grade Local Loop in Combination - Zone 1		1	UNCDX	UDL56	21.86	195.94	36.38	18.42	6.86						
		First 4-Wire 56Kbps Digital Grade Local Loop in Combination - Zone 2		2	UNCDX	UDL56	28.36	195.94	36.38	18.42	6.86						
		First 4-Wire 56Kbps Digital Grade Local Loop in Combination - Zone 3		3	UNCDX	UDL56	38.22	195.94	36.38	18.42	6.86						
		First Interoffice Transport - Dedicated - DS1 combination - Per Mile Per Month			UNC1X	1L5XX	0.1154										
		First Interoffice Transport - Dedicated - DS1 - combination Facility Termination Per Month			UNC1X	U1TF1	34.19	87.76	45.73	43.80	27.97						
		Per each 1/0 Channel System in combination Per Month			UNC1X	MQ1	69.75	86.10									
		Per each OCU-DP COCI (data) COCI per month (2.4-64kbs)			UNCDX	1D1DD	0.9963	27.33	2.90	16.86	1.04						
		3/1 Channel System in combination per month			UNC3X	MQ3	121.90										
		Per each DS1 COCI in combination per month			UNC1X	UC1D1	7.35	27.33	2.90	16.86	1.04						
		Additional 4-Wire 56Kbps Digital Grade Loop in same DS1 Interoffice Transport Combination - Zone 1		1	UNCDX	UDL56	21.86	195.94	36.38	18.42	6.86						
		Additional 4-Wire 56Kbps Digital Grade Loop in same DS1 Interoffice Transport Combination - Zone 2		2	UNCDX	UDL56	28.36	195.94	36.38	18.42	6.86						
		Additional 4-Wire 56Kbps Digital Grade Loop in same DS1 Interoffice Transport Combination - Zone 3		3	UNCDX	UDL56	38.22	195.94	36.38	18.42	6.86						
		OCU-DP COCI (data) COCI in combination per month (2.4-64kbs)			UNCDX	1D1DD	0.9963	27.33	2.90	16.86	1.04						
		Each Additional DS1 Interoffice Channel per mile in same 3/1 Channel System per month			UNC1X	1L5XX	0.1154										
		Each Additional DS1 Interoffice Channel Facility Termination in same 3/1 Channel System per month			UNC1X	U1TF1	34.19	87.76	45.73	43.80	27.97						
		Each Additional DS1 COCI in the same 3/1 channel system combination per month			UNC1X	UC1D1	7.35	27.33	2.90	16.86	1.04						
		Nonrecurring Currently Combined Network Elements Switch -As-Is Charge			UNC1X	UNCCC		5.70	5.70	6.61	6.61						
	EXTENDED 4-WIRE 64 KBPS DIGITAL LOOP WITH DEDICATED DS1 INTEROFFICE TRANSPORT w/ 3/1 MUX																
		First 4-Wire 64Kbps Digital Grade Loop in a DS1 Interoffice Transport Combination - Zone 1		1	UNCDX	UDL64	21.86	195.94	36.38	18.42	6.86						
		First 4-Wire 64Kbps Digital Grade Loop in a DS1 Interoffice Transport Combination - Zone 2		2	UNCDX	UDL64	28.36	195.94	36.38	18.42	6.86						
		First 4-Wire 64Kbps Digital Grade Loop in a DS1 Interoffice Transport Combination - Zone 3		3	UNCDX	UDL64	38.22	195.94	36.38	18.42	6.86						
		First Interoffice Transport - Dedicated - DS1 combination - Per Mile Per Month			UNC1X	1L5XX	0.1154										

UNBUNDLED NETWORK ELEMENTS - Georgia														Attachment: 2		Exhibit: A	
CATEGORY		RATE ELEMENTS	Interim	Zone	BCS	USOC	RATES ($)					Svc Order Submitted Elec per LSR	Svc Order Submitted Manually per LSR	Incremental Charge - Manual Svc Order vs. Electronic-1st	Incremental Charge - Manual Svc Order vs. Electronic-Add'l	Incremental Charge - Manual Svc Order vs. Electronic-Disc 1st	Incremental Charge - Manual Svc Order vs. Electronic-Disc Add'l
							Rec	Nonrecurring		Nonrecurring Disconnect		OSS Rates ($)					
								First	Add'l	First	Add'l	SOMEC	SOMAN	SOMAN	SOMAN	SOMAN	SOMAN
		First Interoffice Transport - Dedicated - DS1 combination - Facility Termination Per Month			UNC1X	U1TF1	34.19	87.76	45.73	43.80	27.97						
		Per each Channel System 1/0 in combination Per Month			UNC1X	MQ1	69.75	86.10									
		Per each OCU-DP COCI (data) in combination - per month (2.4-64kbs)			UNCDX	1D1DD	0.9963	27.33	2.90	16.86	1.04						
		3/1 Channel System in combination per month			UNC3X	MQ3	121.90										
		Per each DS1 COCI in combination per month			UNC1X	UC1D1	7.35	27.33	2.90	16.86	1.04						
		Additional 4-Wire 64Kbps Digital Grade Loop in same DS1 Interoffice Transport Combination - Zone 1		1	UNCDX	UDL64	21.86	195.94	36.38	18.42	6.86						
		Additional 4-Wire 64Kbps Digital Grade Loop in same DS1 Interoffice Transport Combination - Zone 2		2	UNCDX	UDL64	28.36	195.94	36.38	18.42	6.86						
		Additional 4-Wire 64Kbps Digital Grade Loop in same DS1 Interoffice Transport Combination - Zone 3		3	UNCDX	UDL64	38.22	195.94	36.38	18.42	6.86						
		Additional OCU-DP COCI (data) - DS1 to DS0 Channel System combination - per month (2.4-64kbs)			UNCDX	1D1DD	0.9963	27.33	2.90	16.86	1.04						
		Each Additional DS1 Interoffice Channel per mile in same 3/1 Channel System per month			UNC1X	1L5XX	0.1154										
		Each Additional DS1 Interoffice Channel Facility Termination in same 3/1 Channel System per month			UNC1X	U1TF1	34.19	87.76	45.73	43.80	27.97						
		Each Additional DS1 COCI in the same 3/1 channel system combination per month			UNC1X	UC1D1	7.35	27.33	2.90	16.86	1.04						
		Nonrecurring Currently Combined Network Elements Switch -As-Is Charge			UNC1X	UNCCC		5.70	5.70	6.61	6.61						
	EXTENDED 2-WIRE ISDN LOOP WITH DS1 INTEROFFICE TRANSPORT w/ 3/1 MUX																
		First 2-Wire ISDN Loop in a DS1 Interoffice Combination Transport - Zone 1		1	UNCNX	U1L2X	19.82	195.94	36.38	18.42	6.86						
		First 2-Wire ISDN Loop in a DS1 Interoffice Combination Transport - Zone 2		2	UNCNX	U1L2X	26.26	195.94	36.38	18.42	6.86						
		First 2-Wire ISDN Loop in a DS1 Interoffice Combination Transport - Zone 3		3	UNCNX	U1L2X	42.17	195.94	36.38	18.42	6.86						
		First Interoffice Transport - Dedicated - DS1 combination - Per Mile per month			UNC1X	1L5XX	0.1154										
		First Interoffice Transport - Dedicated - DS1 combination - Facility Termination per month			UNC1X	U1TF1	34.19	87.76	45.73	43.80	27.97						
		Per each Channel System 1/0 in combination - per month			UNC1X	MQ1	69.75	86.10									
		Per each 2-wire ISDN COCI (BRITE) in combination - per month			UNCNX	UC1CA	1.66	27.33	2.90	16.86	1.04						
		3/1 Channel System in combination per month			UNC3X	MQ3	121.90										
		Per each DS1 COCI in combination per month			UNC1X	UC1D1	7.35	27.33	2.90	16.86	1.04						
		Additional 2-wire ISDN Loop in same DS1Interoffice Transport Combination - Zone 1		1	UNCNX	U1L2X	19.82	195.94	36.38	18.42	6.86						
		Additional 2-wire ISDN Loop in same DS1Interoffice Transport Combination - Zone 2		2	UNCNX	U1L2X	26.26	195.94	36.38	18.42	6.86						
		Additional 2-wire ISDN Loop in same DS1Interoffice Transport Combination - Zone 3		3	UNCNX	U1L2X	42.17	195.94	36.38	18.42	6.86						
		Additional 2-wire ISDN COCI (BRITE) in same 1/0 channel system combination- per month			UNCNX	UC1CA	1.66	27.33	2.90	16.86	1.04						
		Each Additional DS1 Interoffice Channel per mile in same 3/1 Channel System per month			UNC1X	1L5XX	0.1154										
		Each Additional DS1 Interoffice Channel Facility Termination in same 3/1 Channel System per month			UNC1X	U1TF1	34.19	87.76	45.73	43.80	27.97						
		Each Additional DS1 COCI in the same 3/1 channel system combination per month			UNC1X	UC1D1	7.35	27.33	2.90	16.86	1.04						
		Nonrecurring Currently Combined Network Elements Switch -As-Is Charge			UNC1X	UNCCC		5.70	5.70	6.61	6.61						
	EXTENDED 4-WIRE DS1 LOOP WITH DEDICATED DS1 INTEROFFICE TRANSPORT w/ 3/1 MUX																
		First 4-wire DS1 Digital Lcoal Loop in Combination - Zone 1		1	UNC1X	USLXX	41.02	209.45	70.44	37.91	6.86						
		First 4-wire DS1 Digital Lcoal Loop in Combination - Zone 2		2	UNC1X	USLXX	46.41	209.45	70.44	37.91	6.86						
		First 4-wire DS1 Digital Lcoal Loop in Combination - Zone 3		3	UNC1X	USLXX	62.03	209.45	70.44	37.91	6.86						

UNBUNDLED NETWORK ELEMENTS - Georgia														Attachment: 2		Exhibit: A	
CATEGORY		RATE ELEMENTS	Interim	Zone	BCS	USOC	RATES ($)					Svc Order Submitted Elec per LSR	Svc Order Submitted Manually per LSR	Incremental Charge - Manual Svc Order vs. Electronic-1st	Incremental Charge - Manual Svc Order vs. Electronic-Add'l	Incremental Charge - Manual Svc Order vs. Electronic-Disc 1st	Incremental Charge - Manual Svc Order vs. Electronic-Disc Add'l
							Rec	Nonrecurring		Nonrecurring Disconnect		OSS Rates ($)					
								First	Add'l	First	Add'l	SOMEC	SOMAN	SOMAN	SOMAN	SOMAN	SOMAN
		First Interoffice Transport - Dedicated - DS1 combination - Per Mile Per Month			UNC1X	1L5XX	0.1154										
		First Interoffice Transport - Dedicated - DS1 combination - Facility Termination Per Month			UNC1X	U1TF1	34.19	87.76	45.73	43.80	27.97						
		3/1 Channel System in combination per month			UNC3X	MQ3	121.90										
		Per each DS1 COCI combination per month			UNC1X	UC1D1	7.35	27.33	2.90	16.86	1.04						
		Each Additional DS1 Interoffice Channel per mile in same 3/1 Channel System per month			UNC1X	1L5XX	0.1154										
		Each Additional DS1 Interoffice Channel Facility Termination in same 3/1 Channel System per month			UNC1X	U1TF1	34.19	87.76	45.73	43.80	27.97						
		Each Additional DS1 COCI in the same 3/1 channel system combination per month			UNC1X	UC1D1	7.35	27.33	2.90	16.86	1.04						
		Additional 4-Wire DS1 Digital Local Loop in Combination - Zone 1		1	UNC1X	USLXX	41.02	209.45	70.44	37.91	6.86						
		Additional 4-Wire DS1 Digital Local Loop in Combination - Zone 2		2	UNC1X	USLXX	46.41	209.45	70.44	37.91	6.86						
		Additional 4-Wire DS1 Digital Local Loop in Combination - Zone 3		3	UNC1X	USLXX	62.03	209.45	70.44	37.91	6.86						
		Nonrecurring Currently Combined Network Elements Switch -As-Is Charge			UNC1X	UNCCC		5.70	5.70	6.61	6.61						
	EXTENDED 4-WIRE 56 KBPS DIGITAL EXTENDED LOOP WITH DS0 INTEROFFICE TRANSPORT																
		First 4-wire 56 kbps Local Loop in combination - Zone 1		1	UNCDX	UDL56	21.86	195.94	36.38	18.42	6.86						
		First 4-wire 56 kbps Local Loop in combination - Zone 2		2	UNCDX	UDL56	28.36	195.94	36.38	18.42	6.86						
		First 4-wire 56 kbps Local Loop in combination - Zone 3		3	UNCDX	UDL56	38.22	195.94	36.38	18.42	6.86						
		First 4-wiree 56 kbps Interoffice Transport - Dedicated - Per Mile per month			UNCDX	1L5XX	0.0057										
		First 4-wire 56 kbps Interoffice Transport - Dedicated - Facility Termination per month			UNCDX	U1TD5	7.83	66.53	33.61	43.42	27.60						
		Nonrecurring Currently Combined Network Elements Switch -As-Is Charge			UNCDX	UNCCC		5.70	5.70	6.61	6.61						
	EXTENDED 4-WIRE 64 KBPS DIGITAL EXTENDED LOOP WITH DS0 INTEROFFICE TRANSPORT																
		First 4-wire 64 kbps Local Loop in combination - Zone 1		1	UNCDX	UDL64	21.86	195.94	36.38	18.42	6.86						
		First 4-wire 64 kbps Local Loop in combination - Zone 2		2	UNCDX	UDL64	28.36	195.94	36.38	18.42	6.86						
		First 4-wire 64 kbps Local Loop in combination - Zone 3		3	UNCDX	UDL64	38.22	195.94	36.38	18.42	6.86						
		First I4-wire 65 kbps Interoffice Transport - Dedicated - Per Mile per month			UNCDX	1L5XX	0.0057										
		First 4-wire 64 kbps Interoffice Transport - Dedicated - Facility Termination per month			UNCDX	U1TD6	7.83	66.53	33.61	43.42	27.60						
		Nonrecurring Currently Combined Network Elements Switch -As-Is Charge			UNCDX	UNCCC		5.70	5.70	6.61	6.61						
ADDITIONAL NETWORK ELEMENTS																	
	When used as a part of a currently combined facility, the non-recurrng charges do not apply, but a Switch As Is charge does apply.																
	When used as ordinarily combined network elements in All States, the non-recurring charges apply and the Switch As Is Charge does not.																
	Nonrecurring Currently Combined Network Elements "Switch As Is" Charge (One applies to each combination)																
		Nonrecurring Currently Combined Network Elements Switch -As-Is Charge - 2 wire/4-Wire VG			UNCVX	UNCCC		5.70	5.70	6.61	6.61						
		Nonrecurring Currently Combined Network Elements Switch -As-Is Charge - 56/64 kbps			UNCDX	UNCCC		5.70	5.70	6.61	6.61						
	MULTIPLEXERS																
		DS1 to DS0 Channel System per month			UNC1X	MQ1	69.75	86.10									
		OCU-DP COCI (data) - DS1 to DS0 Channel System - per month (2.4-64kbs) used for a Local Loop			UDL	1D1DD	0.9963	11.98	11.39	6.61	6.61						
		OCU-DP COCI (data) - DS1 to DS0 Channel System - per month (2.4-64kbs) used for connection to a channelized DS1 Local Channel in the same SWC as collocation			U1TUD	1D1DD	0.9963	11.98	11.39	6.61	6.61						
		2-wire ISDN COCI (BRITE) - DS1 to DS0 Channel Systsem - per month for a Local Loop			UDN	UC1CA	1.66	15.81	11.39	6.61	6.61						

UNBUNDLED NETWORK ELEMENTS - Georgia														Attachment: 2		Exhibit: A	
CATEGORY		RATE ELEMENTS	Interim	Zone	BCS	USOC	RATES ($)					Svc Order Submitted Elec per LSR	Svc Order Submitted Manually per LSR	Incremental Charge - Manual Svc Order vs. Electronic-1st	Incremental Charge - Manual Svc Order vs. Electronic-Add'l	Incremental Charge - Manual Svc Order vs. Electronic-Disc 1st	Incremental Charge - Manual Svc Order vs. Electronic-Disc Add'l
							Rec	Nonrecurring		Nonrecurring Disconnect		OSS Rates ($)					
								First	Add'l	First	Add'l	SOMEC	SOMAN	SOMAN	SOMAN	SOMAN	SOMAN
		2-wire ISDN COCI (BRITE) - DS1 to DS0 Channel Systsem - per month used for connection to a channelized DS1 Local Channel in the same SWC as collocation			U1TUB	UC1CA	1.66	15.81	11.39	6.61	6.61						
		Voice Grade COCI - DS1 to DS0 Channel System - per month used for a Local Loop			UEA	1D1VG	0.4689	11.98	11.39	6.61	6.61						
		Voice Grade COCI - DS1 to DS0 Channel System - per month used for connection to a channelized DS1 Local Channel in the same SWC as collocation			U1TUC	1D1VG	0.4689	11.98	11.39	6.61	6.61						
		DS3 to DS1 Channel System per month			UNC3X	MQ3	121.90										
		STS-1 to DS1 Channel System per month			UNCSX	MQ3	121.90										
		DS1 COCI used with Loop per month			USL	UC1D1	7.35	15.81	11.39	6.61	6.61						
		DS1 COCI (used for connection to a channelized DS1 Local Channel in the same SWC as collocation) per month			U1TUA	UC1D1	7.35	15.81	11.39	6.61	6.61						
		DS1 COCI used with Interoffice Channel per month			U1TD1	UC1D1	7.35	15.81	11.39	6.61	6.61						
		DS3 Interface Unit (DS1 COCI) used with Local Channel per month			ULDD1	UC1D1	7.35	15.81	11.39	6.61	6.61						

UNBUNDLED NETWORK ELEMENTS - Kentucky														Attachment: 2		Exhibit: A	
CATEGORY		RATE ELEMENTS	Interim	Zone	BCS	USOC	RATES ($)					Svc Order Submitted Elec per LSR	Svc Order Submitted Manually per LSR	Incremental Charge - Manual Svc Order vs. Electronic-1st	Incremental Charge - Manual Svc Order vs. Electronic-Add'l	Incremental Charge - Manual Svc Order vs. Electronic-Disc 1st	Incremental Charge - Manual Svc Order vs. Electronic-Disc Add'l
							Rec	Nonrecurring		Nonrecurring Disconnect		OSS Rates ($)					
								First	Add'l	First	Add'l	SOMEC	SOMAN	SOMAN	SOMAN	SOMAN	SOMAN
	The "Zone" shown in the sections for stand-alone loops or loops as part of a combination refers to Geographically Deaveraged UNE Zones. To view Geographically Deaveraged UNE Zone Designations by Central Office, refer to internet Website: http://www.interconnection.bellsouth.com/become_a_clec/html/interconnection.htm																
OPERATIONAL SUPPORT SYSTEMS (OSS) - "REGIONAL RATES"																	
	NOTE: (1) CLEC should contact its contract negotiator if it prefers the "state specific" OSS charges as ordered by the State Commissions. The OSS charges currently contained in this rate exhibit are the BellSouth "regional" service ordering charges. CLEC may elect either the state specific Commission ordered rates for the service ordering charges, or CLEC may elect the regional service ordering charge, however, CLEC can not obtain a mixture of the two regardless if CLEC has a interconnection contract established in each of the 9 states.																
	NOTE: (2) Any element that can be ordered electronically will be billed according to the SOMEC rate listed in this category. Please refer to BellSouth's Local Ordering Handbook (LOH) to determine if a product can be ordered electronically. For those elements that cannot be ordered electronically at present per the LOH, the listed SOMEC rate in this category reflects the charge that would be billed to a CLEC once electronic ordering capabilities come on-line for that element. Otherwise, the manual ordering charge, SOMAN, will be applied to a CLECs bill when it submits an LSR to BellSouth.																
		OSS - Electronic Service Order Charge, Per Local Service Request (LSR) - UNE Only				SOMEC		3.50	0.00	3.50	0.00						
		OSS - Manual Service Order Charge, Per Local Service Request (LSR) - UNE Only				SOMAN		7.86	0.00	0.99	0.00						
UNE SERVICE DATE ADVANCEMENT CHARGE																	
	NOTE: The Expedite charge will be maintained commensurate with BellSouth's FCC No.1 Tariff, Section 5 as applicable.																
		UNE Expedite Charge per Circuit or Line Assignable USOC, per Day			UAL, UEANL, UCL, UEF, UDF, UEQ, UDL, UENTW, UDN, UEA, UHL, ULC, USL, U1T12, U1T48, U1TD1, U1TD3, U1TDX, U1TO3, U1TS1, U1TVX, UC1BC, UC1BL, UC1CC, UC1CL, UC1DC, UC1DL, UC1EC, UC1EL, UC1FC, UC1FL, UC1GC, UC1GL, UC1HC, UC1HL, UDL12, UDL48, UDLO3, UDLSX, UE3, ULD12, ULD48, ULDD1, ULDD3, ULDDX, ULDO3, ULDS1, ULDVX, UNC1X, UNC3X, UNCDX, UNCNX, UNCSX, UNCVX, UNLD1, UNLD3, UXTD1, UXTD3, UXTS1, U1TUC, U1TUD, U1TUB, U1TUA	SDASP		200.00									
UNBUNDLED EXCHANGE ACCESS LOOP																	
	2-WIRE ANALOG VOICE GRADE LOOP																
		2-Wire Analog Voice Grade Loop - Service Level 1- Zone 1		1	UEANL	UEAL2	10.56	46.66	22.57	26.65	7.65						
		2-Wire Analog Voice Grade Loop - Service Level 1- Zone 2		2	UEANL	UEAL2	15.34	46.66	22.57	26.65	7.65						
		2-Wire Analog Voice Grade Loop - Service Level 1- Zone 3		3	UEANL	UEAL2	31.11	46.66	22.57	26.65	7.65						
		2-Wire Analog Voice Grade Loop - Service Level 1- Zone 1		1	UEANL	UEASL	10.56	46.66	22.57	26.65	7.65						
		2-Wire Analog Voice Grade Loop - Service Level 1- Zone 2		2	UEANL	UEASL	15.34	46.66	22.57	26.65	7.65						
		2-Wire Analog Voice Grade Loop - Service Level 1- Zone 3		3	UEANL	UEASL	31.11	46.66	22.57	26.65	7.65						
		Unbundled Miscellaneous Rate Element, Tag Loop at End User Premise			UEANL	URETL		8.33	0.83								
		Loop Testing - Basic 1st Half Hour			UEANL	URET1		46.88	46.88								
		Loop Testing - Basic Additional Half Hour			UEANL	URETA		24.16	24.16								

UNBUNDLED NETWORK ELEMENTS - Kentucky														Attachment: 2		Exhibit: A	
CATEGORY		RATE ELEMENTS	Interim	Zone	BCS	USOC	RATES ($)					Svc Order Submitted Elec per LSR	Svc Order Submitted Manually per LSR	Incremental Charge - Manual Svc Order vs. Electronic-1st	Incremental Charge - Manual Svc Order vs. Electronic-Add'l	Incremental Charge - Manual Svc Order vs. Electronic-Disc 1st	Incremental Charge - Manual Svc Order vs. Electronic-Disc Add'l
							Rec	Nonrecurring		Nonrecurring Disconnect		OSS Rates ($)					
								First	Add'l	First	Add'l	SOMEC	SOMAN	SOMAN	SOMAN	SOMAN	SOMAN
		CLEC to CLEC Conversion Charge Without Outside Dispatch (UVL-SL1)			UEANL	UREWO		15.78	8.94								
		Unbundled Voice Loop, Non-Design Voice Loop, billing for BST providing make-up (Engineering Information - E.I.)			UEANL	UEANM		13.49	13.49								
		Manual Order Coordination for UVL-SL1s (per loop)			UEANL	UEAMC		9.00	9.00								
		Order Coordination for Specified Conversion Time for UVL-SL1 (per LSR)			UEANL	OCOSL		23.01	23.01								
	2-WIRE Unbundled COPPER LOOP																
		2-Wire Unbundled Copper Loop - Non-Designed Zone 1		1	UEQ	UEQ2X	10.58	44.97	20.89	25.64	6.65						
		2 Wire Unbundled Copper Loop - Non-Designed - Zone 2		2	UEQ	UEQ2X	11.51	44.97	20.89	25.64	6.65						
		2 Wire Unbundled Copper Loop - Non-Designed - Zone 3		3	UEQ	UEQ2X	13.19	44.97	20.89	25.64	6.65						
		Unbundled Miscellaneous Rate Element, Tag Loop at End User Premise			UEQ	URETL		8.33	0.83								
		Manual Order Coordination 2 Wire Unbundled Copper Loop - Non-Designed (per loop)			UEQ	USBMC		9.00	9.00								
		Unbundled Copper Loop, Non-Design Copper Loop, billing for BST providing make-up (Engineering Information - E.I.)			UEQ	UEQMU		13.49	13.49								
		Loop Testing - Basic 1st Half Hour			UEQ	URET1		46.88	46.88								
		Loop Testing - Basic Additional Half Hour			UEQ	URETA		24.16	24.16								
		CLEC to CLEC Conversion Charge Without Outside Dispatch (UCL-ND)			UEQ	UREWO		14.27	7.43								
UNBUNDLED EXCHANGE ACCESS LOOP																	
	2-WIRE ANALOG VOICE GRADE LOOP																
		2-Wire Analog Voice Grade Loop - Service Level 2 w/Loop or Ground Start Signaling - Zone 1		1	UEA	UEAL2	12.67	134.89	81.87	73.65	14.88						
		2-Wire Analog Voice Grade Loop - Service Level 2 w/Loop or Ground Start Signaling - Zone 2		2	UEA	UEAL2	17.45	134.89	81.87	73.65	14.88						
		2-Wire Analog Voice Grade Loop - Service Level 2 w/Loop or Ground Start Signaling - Zone 3		3	UEA	UEAL2	33.22	134.89	81.87	73.65	14.88						
		Order Coordination for Specified Conversion Time (per LSR)			UEA	OCOSL		23.01									
		2-Wire Analog Voice Grade Loop - Service Level 2 w/Reverse Battery Signaling - Zone 1		1	UEA	UEAR2	12.67	134.89	81.87	73.65	14.88						
		2-Wire Analog Voice Grade Loop - Service Level 2 w/Reverse Battery Signaling - Zone 2		2	UEA	UEAR2	17.45	134.89	81.87	73.65	14.88						
		2-Wire Analog Voice Grade Loop - Service Level 2 w/Reverse Battery Signaling - Zone 3		3	UEA	UEAR2	33.22	134.89	81.87	73.65	14.88						
		Order Coordination for Specified Conversion Time (per LSR)			UEA	OCOSL		23.01									
		CLEC to CLEC Conversion Charge without outside dispatch			UEA	UREWO		87.72	36.36								
		Loop Tagging - Service Level 2 (SL2)			UEA	URETL		11.21	1.10								
	4-WIRE ANALOG VOICE GRADE LOOP																
		4-Wire Analog Voice Grade Loop - Zone 1		1	UEA	UEAL4	29.26	164.11	112.36	78.91	18.66						
		4-Wire Analog Voice Grade Loop - Zone 2		2	UEA	UEAL4	34.25	164.11	112.36	78.91	18.66						
		4-Wire Analog Voice Grade Loop - Zone 3		3	UEA	UEAL4	85.06	164.11	112.36	78.91	18.66						
		Order Coordination for Specified Conversion Time (per LSR)			UEA	OCOSL		23.01									
		CLEC to CLEC Conversion Charge without outside dispatch			UEA	UREWO		87.72	36.36								
	2-WIRE ISDN DIGITAL GRADE LOOP																
		2-Wire ISDN Digital Grade Loop - Zone 1		1	UDN	U1L2X	18.44	146.77	95.02	71.38	13.83						
		2-Wire ISDN Digital Grade Loop - Zone 2		2	UDN	U1L2X	25.08	146.77	95.02	71.38	13.83						
		2-Wire ISDN Digital Grade Loop - Zone 3		3	UDN	U1L2X	42.87	146.77	95.02	71.38	13.83						
		Order Coordination For Specified Conversion Time (per LSR)			UDN	OCOSL		23.01									
		CLEC to CLEC Conversion Charge without outside dispatch			UDN	UREWO		91.63	44.16								
	2-WIRE ASYMMETRICAL DIGITAL SUBSCRIBER LINE (ADSL) COMPATIBLE LOOP																
		2 Wire Unbundled ADSL Loop including manual service inquiry & facility reservation - Zone 1		1	UAL	UAL2X	10.82	141.98	79.73	69.02	11.47						
		2 Wire Unbundled ADSL Loop including manual service inquiry & facility reservation - Zone 2		2	UAL	UAL2X	11.79	141.98	79.73	69.02	11.47						
		2 Wire Unbundled ADSL Loop including manual service inquiry & facility reservation - Zone 3		3	UAL	UAL2X	12.87	141.98	79.73	69.02	11.47						
		Order Coordination for Specified Conversion Time (per LSR)			UAL	OCOSL		23.01									

UNBUNDLED NETWORK ELEMENTS - Kentucky														Attachment: 2		Exhibit: A	
CATEGORY		RATE ELEMENTS	Interim	Zone	BCS	USOC	RATES ($)					Svc Order Submitted Elec per LSR	Svc Order Submitted Manually per LSR	Incremental Charge - Manual Svc Order vs. Electronic-1st	Incremental Charge - Manual Svc Order vs. Electronic-Add'l	Incremental Charge - Manual Svc Order vs. Electronic-Disc 1st	Incremental Charge - Manual Svc Order vs. Electronic-Disc Add'l
							Rec	Nonrecurring		Nonrecurring Disconnect		OSS Rates ($)					
								First	Add'l	First	Add'l	SOMEC	SOMAN	SOMAN	SOMAN	SOMAN	SOMAN
		2 Wire Unbundled ADSL Loop without manual service inquiry & facility reservaton - Zone 1		1	UAL	UAL2W	10.82	121.18	69.00	69.09	11.54						
		2 Wire Unbundled ADSL Loop without manual service inquiry & facility reservaton - Zone 2		2	UAL	UAL2W	11.79	121.18	69.00	69.09	11.54						
		2 Wire Unbundled ADSL Loop without manual service inquiry & facility reservaton - Zone 3		3	UAL	UAL2W	12.87	121.18	69.00	69.09	11.54						
		Order Coordination for Specified Conversion Time (per LSR)			UAL	OCOSL		23.01									
		CLEC to CLEC Conversion Charge without outside dispatch			UAL	UREWO		86.20	40.40								
	2-WIRE HIGH BIT RATE DIGITAL SUBSCRIBER LINE (HDSL) COMPATIBLE LOOP																
		2 Wire Unbundled HDSL Loop including manual service inquiry & facility reservation - Zone 1		1	UHL	UHL2X	8.75	151.54	89.29	69.09	11.54						
		2 Wire Unbundled HDSL Loop including manual service inquiry & facility reservation - Zone 2		2	UHL	UHL2X	9.56	151.54	89.29	69.09	11.54						
		2 Wire Unbundled HDSL Loop including manual service inquiry & facility reservation - Zone 3		3	UHL	UHL2X	10.61	151.54	89.29	69.09	11.54						
		Order Coordination for Specified Conversion Time (per LSR)			UHL	OCOSL		23.01									
		2 Wire Unbundled HDSL Loop without manual service inquiry and facility reservation - Zone 1		1	UHL	UHL2W	8.75	130.74	78.56	69.09	11.54						
		2 Wire Unbundled HDSL Loop without manual service inquiry and facility reservation - Zone 2		2	UHL	UHL2W	9.56	130.74	78.56	69.09	11.54						
		2 Wire Unbundled HDSL Loop without manual service inquiry and facility reservation - Zone 3		3	UHL	UHL2W	10.61	130.74	78.56	69.09	11.54						
		Order Coordination for Specified Conversion Time (per LSR)			UHL	OCOSL		23.01									
		CLEC to CLEC Conversion Charge without outside dispatch			UHL	UREWO		86.14	40.40								
	4-WIRE HIGH BIT RATE DIGITAL SUBSCRIBER LINE (HDSL) COMPATIBLE LOOP																
		4 Wire Unbundled HDSL Loop including manual service inquiry and facility reservation - Zone 1		1	UHL	UHL4X	13.95	185.75	123.50	74.95	14.69						
		4-Wire Unbundled HDSL Loop including manual service inquiry and facility reservation - Zone 2	I	2	UHL	UHL4X	15.68	185.75	123.50	74.95	14.69						
		4-Wire Unbundled HDSL Loop including manual service inquiry and facility reservation - Zone 3		3	UHL	UHL4X	16.98	185.75	123.50	74.95	14.69						
		Order Coordination for Specified Conversion Time (per LSR)			UHL	OCOSL		23.01									
		4-Wire Unbundled HDSL Loop without manual service inquiry and facility reservation - Zone 1		1	UHL	UHL4W	13.95	164.95	114.04	77.32	15.80						
		4-Wire Unbundled HDSL Loop without manual service inquiry and facility reservation - Zone 2		2	UHL	UHL4W	15.68	164.95	114.04	77.32	15.80						
		4-Wire Unbundled HDSL Loop without manual service inquiry and facility reservation - Zone 3		3	UHL	UHL4W	16.98	164.95	114.04	77.32	15.80						
		Order Coordination for Specified Conversion Time (per LSR)			UHL	OCOSL		23.01									
		CLEC to CLEC Conversion Charge without outside dispatch			UHL	UREWO		86.14	40.40								
	4-WIRE DS1 DIGITAL LOOP																
		4-Wire DS1 Digital Loop - Zone 1		1	USL, NTCD1	USLXX	86.47	306.69	174.44	65.83	14.55						
		4-Wire DS1 Digital Loop - Zone 2		2	USL, NTCD1	USLXX	114.10	306.69	174.44	65.83	14.55						
		4-Wire DS1 Digital Loop - Zone 3		3	USL, NTCD1	USLXX	297.76	306.69	174.44	65.83	14.55						
		Order Coordination for Specified Conversion Time (per LSR)			USL, NTCD1	OCOSL		23.01									
		CLEC to CLEC Conversion Charge without outside dispatch			USL, NTCD1	UREWO		101.09	43.04								
	4-WIRE 19.2, 56 OR 64 KBPS DIGITAL GRADE LOOP																
		4 Wire Unbundled Digital 19.2 Kbps		1	UDL	UDL19	27.59	157.81	106.06	78.91	18.66						
		4 Wire Unbundled Digital 19.2 Kbps		2	UDL	UDL19	32.48	157.81	106.06	78.91	18.66						
		4 Wire Unbundled Digital 19.2 Kbps		3	UDL	UDL19	36.37	157.81	106.06	78.91	18.66						
		4 Wire Unbundled Digital Loop 56 Kbps - Zone 1		1	UDL	UDL56	27.59	157.81	106.06	78.91	18.66						
		4 Wire Unbundled Digital Loop 56 Kbps - Zone 2		2	UDL	UDL56	32.48	157.81	106.06	78.91	18.66						
		4 Wire Unbundled Digital Loop 56 Kbps - Zone 3		3	UDL	UDL56	36.37	157.81	106.06	78.91	18.66						
		Order Coordination for Specified Conversion Time (per LSR)			UDL	OCOSL		23.01									
		4 Wire Unbundled Digital Loop 64 Kbps - Zone 1		1	UDL	UDL64	27.59	157.81	106.06	78.91	18.66						
		4 Wire Unbundled Digital Loop 64 Kbps - Zone 2		2	UDL	UDL64	32.48	157.81	106.06	78.91	18.66						
		4 Wire Unbundled Digital Loop 64 Kbps - Zone 3		3	UDL	UDL64	36.37	157.81	106.06	78.91	18.66						
		Order Coordination for Specified Conversion Time (per LSR)			UDL	OCOSL		23.01									
		CLEC to CLEC Conversion Charge without outside dispatch			UDL	UREWO		102.13	49.75								

UNBUNDLED NETWORK ELEMENTS - Kentucky														Attachment: 2		Exhibit: A	
CATEGORY		RATE ELEMENTS	Interim	Zone	BCS	USOC	RATES ($)					Svc Order Submitted Elec per LSR	Svc Order Submitted Manually per LSR	Incremental Charge - Manual Svc Order vs. Electronic-1st	Incremental Charge - Manual Svc Order vs. Electronic-Add'l	Incremental Charge - Manual Svc Order vs. Electronic-Disc 1st	Incremental Charge - Manual Svc Order vs. Electronic-Disc Add'l
							Rec	Nonrecurring		Nonrecurring Disconnect		OSS Rates ($)					
								First	Add'l	First	Add'l	SOMEC	SOMAN	SOMAN	SOMAN	SOMAN	SOMAN
	2-WIRE Unbundled COPPER LOOP																
		2-Wire Unbundled Copper Loop-Designed including manual service inquiry & facility reservation - Zone 1		1	UCL	UCLPB	10.82	140.95	78.70	69.09	11.54						
		2-Wire Unbundled Copper Loop-Designed including manual service inquiry & facility reservation - Zone 2		2	UCL	UCLPB	11.79	140.95	78.70	69.09	11.54						
		2 Wire Unbundled Copper Loop-Designed including manual service inquiry & facility reservation - Zone 3		3	UCL	UCLPB	12.87	140.95	78.70	69.09	11.54						
		Order Coordination for Unbundled Copper Loops (per loop)			UCL	UCLMC		9.00	9.00								
		2-Wire Unbundled Copper Loop-Designed without manual service inquiry and facility reservation - Zone 1		1	UCL	UCLPW	10.82	120.15	67.97	69.09	11.54						
		2-Wire Unbundled Copper Loop-Designed without manual service inquiry and facility reservation - Zone 2		2	UCL	UCLPW	11.79	120.15	67.97	69.09	11.54						
		2-Wire Unbundled Copper Loop-Designed without manual service inquiry and facility reservation - Zone 3		3	UCL	UCLPW	12.87	120.15	67.97	69.09	11.54						
		Order Coordination for Unbundled Copper Loops (per loop)			UCL	UCLMC		9.00	9.00								
		CLEC to CLEC Conversion Charge without outside dispatch (UCL-Des)			UCL	UREWO		97.23	42.48								
	4-WIRE COPPER LOOP																
		4-Wire Copper Loop-Designed including manual service inquiry and facility reservation - Zone 1		1	UCL	UCL4S	16.92	170.31	108.06	74.95	14.69						
		4-Wire Copper Loop-Designed including manual service inquiry and facility reservation - Zone 2		2	UCL	UCL4S	17.36	170.31	108.06	74.95	14.69						
		4-Wire Copper Loop-Designed including manual service inquiry and facility reservation - Zone 3		3	UCL	UCL4S	28.10	170.31	108.06	74.95	14.69						
		Order Coordination for Unbundled Copper Loops (per loop)			UCL	UCLMC		9.00	9.00								
		4-Wire Copper Loop-Designed without manual service inquiry and facility reservation - Zone 1		1	UCL	UCL4W	16.92	149.52	97.33	74.95	14.69						
		4-Wire Copper Loop-Designed without manual service inquiry and facility reservation - Zone 2		2	UCL	UCL4W	17.36	149.52	97.33	74.95	14.69						
		4-Wire Copper Loop-Designed without manual service inquiry and facility reservation - Zone 3		3	UCL	UCL4W	28.10	149.52	97.33	74.95	14.69						
		Order Coordination for Unbundled Copper Loops (per loop)			UCL	UCLMC		9.00	9.00								
		CLEC to CLEC Conversion Charge without outside dispatch (UCL-Des)			UCL	UREWO		97.23	42.48								
LOOP MODIFICATION																	
		Unbundled Loop Modification, Removal of Load Coils - 2 Wire pair less than or equal to 18k ft, per Unbundled Loop			UAL, UHL, UCL, UEQ, ULS, UEA, UEANL, UEPSR, UEPSB	ULM2L		9.24	9.24								
		Unbundled Loop Modification Removal of Load Coils - 4 Wire less than or equal to 18K ft, per Unbundled Loop			UHL, UCL, UEA	ULM4L		9.24	9.24								
		Unbundled Loop Modification Removal of Bridged Tap Removal, per unbundled loop			UAL, UHL, UCL, UEQ, ULS, UEA, UEANL, UEPSR, UEPSB	ULMBT		10.47	10.47								
SUB-LOOPS																	
	Sub-Loop Distribution																
		Sub-Loop - Per Cross Box Location - CLEC Feeder Facility Set-Up	I		UEANL	USBSA		207.91	207.91								
		Sub-Loop - Per Cross Box Location - Per 25 Pair Panel Set-Up	I		UEANL	USBSB		12.50	12.50								
		Sub-Loop - Per Building Equipment Room - CLEC Feeder Facility Set-Up	I		UEANL	USBSC		80.87	80.87								
		Sub-Loop - Per Building Equipment Room - Per 25 Pair Panel Set-Up	I		UEANL	USBSD		45.04	45.04								
		Sub-Loop Distribution Per 2-Wire Analog Voice Grade Loop - Zone 1	I	1	UEANL	USBN2	6.34	85.03	39.05	59.81	7.90						
		Sub-Loop Distribution Per 2-Wire Analog Voice Grade Loop - Zone 2	I	2	UEANL	USBN2	9.06	85.03	39.05	59.81	7.90						

UNBUNDLED NETWORK ELEMENTS - Kentucky														Attachment: 2		Exhibit: A	
CATEGORY		RATE ELEMENTS	Interim	Zone	BCS	USOC	RATES ($)					Svc Order Submitted Elec per LSR	Svc Order Submitted Manually per LSR	Incremental Charge - Manual Svc Order vs. Electronic-1st	Incremental Charge - Manual Svc Order vs. Electronic-Add'l	Incremental Charge - Manual Svc Order vs. Electronic-Disc 1st	Incremental Charge - Manual Svc Order vs. Electronic-Disc Add'l
							Rec	Nonrecurring		Nonrecurring Disconnect		OSS Rates ($)					
								First	Add'l	First	Add'l	SOMEC	SOMAN	SOMAN	SOMAN	SOMAN	SOMAN
		Sub-Loop Distribution Per 2-Wire Analog Voice Grade Loop - Zone 3	I	3	UEANL	USBN2	14.82	85.03	39.05	59.81	7.90						
		Order Coordination for Unbundled Sub-Loops, per sub-loop pair			UEANL	USBMC		9.00	9.00								
		Sub-Loop Distribution Per 4-Wire Analog Voice Grade Loop - Zone 1		1	UEANL	USBN4	8.14	102.31	56.32	65.24	10.88						
		Sub-Loop Distribution Per 4-Wire Analog Voice Grade Loop - Zone 2		2	UEANL	USBN4	8.63	102.31	56.32	65.24	10.88						
		Sub-Loop Distribution Per 4-Wire Analog Voice Grade Loop - Zone 3		3	UEANL	USBN4	25.60	102.31	56.32	65.24	10.88						
		Order Coordination for Unbundled Sub-Loops, per sub-loop pair			UEANL	USBMC		9.00	9.00								
		Sub-Loop 2-Wire Intrabuilding Network Cable (INC)	I		UEANL	USBR2	2.57	68.35	22.36	59.81	7.90						
		Order Coordination for Unbundled Sub-Loops, per sub-loop pair			UEANL	USBMC		9.00	9.00								
		Sub-Loop 4-Wire Intrabuilding Network Cable (INC)	I		UEANL	USBR4	4.98	76.49	30.51	65.24	10.88						
		Order Coordination for Unbundled Sub-Loops, per sub-loop pair			UEANL	USBMC		9.00	9.00								
		Loop Testing - Basic 1st Half Hour			UEANL	URET1		46.88	46.88								
		Loop Testing - Basic Additional Half Hour			UEANL	URETA		24.16	24.16								
		2 Wire Copper Unbundled Sub-Loop Distribution - Zone 1	I	1	UEF	UCS2X	5.45	85.03	39.05	59.81	7.90						
		2 Wire Copper Unbundled Sub-Loop Distribution - Zone 2	I	2	UEF	UCS2X	7.06	85.03	39.05	59.81	7.90						
		2 Wire Copper Unbundled Sub-Loop Distribution - Zone 3	I	3	UEF	UCS2X	9.67	85.03	39.05	59.81	7.90						
		Order Coordination for Unbundled Sub-Loops, per sub-loop pair			UEF	USBMC		9.00	9.00								
		4 Wire Copper Unbundled Sub-Loop Distribution - Zone 1	I	1	UEF	UCS4X	7.09	102.31	56.32	65.24	10.88						
		4 Wire Copper Unbundled Sub-Loop Distribution - Zone 2	I	2	UEF	UCS4X	8.66	102.31	56.32	65.24	10.88						
		4 Wire Copper Unbundled Sub-Loop Distribution - Zone 3	I	3	UEF	UCS4X	19.40	102.31	56.32	65.24	10.88						
		Order Coordination for Unbundled Sub-Loops, per sub-loop pair			UEF	USBMC		9.00	9.00								
		Loop Testing - Basic 1st Half Hour			UEF	URET1		46.88	46.88								
		Loop Testing - Basic Additional Half Hour			UEF	URETA		24.16	24.16								
	Unbundled Network Terminating Wire (UNTW)																
		Unbundled Network Terminating Wire (UNTW) per Pair			UENTW	UENPP	0.53	23.51	23.51								
	Network Interface Device (NID)																
		Network Interface Device (NID) - 1-2 lines			UENTW	UND12		73.53	49.47								
		Network Interface Device (NID) - 1-6 lines			UENTW	UND16		115.96	91.91								
		Network Interface Device Cross Connect - 2 W			UENTW	UNDC2		8.56	8.56								
		Network Interface Device Cross Connect - 4W			UENTW	UNDC4		8.56	8.56								
UNE OTHER, PROVISIONING ONLY - NO RATE																	
		NID - Dispatch and Service Order for NID installation			UENTW	UNDBX	0.00	0.00									
		UNTW Circuit Id Establishment, Provisioning Only - No Rate			UENTW	UENCE	0.00	0.00									
		Unbundled Contract Name, Provisioning Only - No Rate			UEANL,UEF,UEQ,UENTW	UNECN	0.00	0.00									
HIGH CAPACITY UNBUNDLED LOCAL LOOP																	
		High Capacity Unbundled Local Loop - DS3 - Per Mile per month			UE3	1L5ND	9.25										
		High Capacity Unbundled Local Loop - DS3 - Facility Termination per month			UE3	UE3PX	308.31	551.38	338.08	173.00	120.42						
		High Capacity Unbundled Local Loop - STS-1 - Per Mile per month			UDLSX	1L5ND	9.25										
		High Capacity Unbundled Local Loop - STS-1 - Facility Termination per month			UDLSX	UDLS1	320.51	551.38	338.08	173.00	120.42						
LOOP MAKE-UP																	
		Loop Makeup - Preordering Without Reservation, per working or spare facility queried (Manual).			UMK	UMKLW		23.40	23.40								
		Loop Makeup - Preordering With Reservation, per spare facility queried (Manual).			UMK	UMKLP		24.85	24.85								

UNBUNDLED NETWORK ELEMENTS - Kentucky														Attachment: 2		Exhibit: A	
CATEGORY		RATE ELEMENTS	Interim	Zone	BCS	USOC	RATES ($)					Svc Order Submitted Elec per LSR	Svc Order Submitted Manually per LSR	Incremental Charge - Manual Svc Order vs. Electronic-1st	Incremental Charge - Manual Svc Order vs. Electronic-Add'l	Incremental Charge - Manual Svc Order vs. Electronic-Disc 1st	Incremental Charge - Manual Svc Order vs. Electronic-Disc Add'l
							Rec	Nonrecurring		Nonrecurring Disconnect		OSS Rates ($)					
								First	Add'l	First	Add'l	SOMEC	SOMAN	SOMAN	SOMAN	SOMAN	SOMAN
		Loop Makeup--With or Without Reservation, per working or spare facility queried (Mechanized)			UMK	UMKMQ		0.67	0.67								
LINE SHARING AND LINE SPLITTING																	
	NOTE 1: The Line Sharing monthly recurring rates for all installations completed from October 02, 2003 through midnight October 01, 2004 shall be billed as follows:																
	NOTE 1: 10/02/2003 – 10/01/2004: 25% of the rate for an unbundled copper loop non-designed ("UCLND")																
	NOTE 1: 10/02/2004 – 10/01/2005: 50% of the rate for UCLND																
	NOTE 1: 10/02/2005 – 10/01/2006: 75% of the rate for UCLND																
	NOTE 1: Above will apply to USOCS: ULSDT and ULSCT																
	****NOTE 2: The Line Sharing monthly recurring rates with USOCs ULSDC and ULSCC applies only to circuits installed and inservice on or before October 1, 2003**																
	LINE SHARING																
	SPLITTERS-CENTRAL OFFICE BASED																
		Line Sharing Splitter, per System 96 Line Capacity			ULS	ULSDA	198.83	379.05	0.00	358.55	0.00						
		Line Sharing Splitter, per System 24 Line Capacity			ULS	ULSDB	49.71	379.05	0.00	358.55	0.00						
		Line Sharing Splitter, Per System, 8 Line Capacity			ULS	ULSD8	16.94	377.71	0.00	357.29	0.00						
		Line Sharing-DLEC Owned Splitter in CO-CFA activaton-deactivation (per LSOD)			ULS	ULSDG		173.62	0.00	100.40	0.00						
	END USER ORDERING-CENTRAL OFFICE BASED LINE SHARING																
		Line Sharing - per Line Activation (BST Owned splitter) - OBSOLETE see **NOTE 2			ULS	ULSDC	0.61	37.16	21.28	20.17	9.90						
		Line Share Service, TRO per line activation, BST owned splitter - Central Office Located (50% of UCLND) - please see NOTE 1 (E:10/2/2004)			ULS	ULSDT	5.29	37.16	21.28	20.17	9.90						
		Line Share Service, TRO per line activation, BST owned splitter - Central Office Located (75% of UCLND) - please see NOTE 1 (E:10/2/2005)			ULS	ULSDT	7.94	37.16	21.28	20.17	9.90						
		Line Sharing - per Subsequent Activity per Line Rearrangement(BST Owned Splitter)			ULS	ULSDS		32.90	16.43								
		Line Sharing - per Subsequent Activity per Line Rearrangement(DLEC Owned Splitter)			ULS	ULSCS		32.90	16.43								
		Line Sharing - per Line Activation (DLEC owned Splitter) - OBSOLETE see **NOTE 2			ULS	ULSCC	0.61	47.44	19.31	20.67	12.74						
		Line Share Service, TRO per line activation, CLEC owned splitter - Central Office Located (50% of UCLND) - please see NOTE 1 (E:10/2/2004)			ULS	ULSCT	5.29	47.44	19.31	20.67	12.74						
		Line Share Service, TRO per line activation, CLEC owned splitter - Central Office Located (75% of UCLND) - please see NOTE 1 (E:10/2/2005)			ULS	ULSCT	7.94	47.44	19.31	20.67	12.74						
	LINE SPLITTING																
	MAINTENANCE																
		No Trouble Found - per 1/2 hour increments - Basic						80.00	55.00								
		No Trouble Found - per 1/2 hour increments - Overtime						120.00	82.50								
		No Trouble Found - per 1/2 hour increments - Premium						160.00	110.00								
UNBUNDLED DEDICATED TRANSPORT																	
	INTEROFFICE CHANNEL - DEDICATED TRANSPORT																
		Interoffice Channel - Dedicated Transport - 2-Wire Voice Grade - Per Mile per month			U1TVX	1L5XX	0.01										
		Interoffice Channel - Dedicated Transport- 2- Wire Voice Grade - Facility Termination			U1TVX	U1TV2	29.11	47.34	31.78	22.77	8.75						
		Interoffice Channel - Dedicated Transpor t- 2-Wire Voice Grade Rev Bat. - Per Mile per month			U1TVX	1L5XX	0.01										
		Interoffice Channel - Dedicated Transport- 2- Wire VG Rev Bat. - Facility Termination			U1TVX	U1TR2	29.11	47.34	31.78	22.77	8.75						
		Interoffice Channel - Dedicated Transport - 4-Wire Voice Grade - Per Mile per month			U1TVX	1L5XX	0.01										
		Interoffice Channel - Dedicated Transport - 4- Wire Voice Grade - Facility Termination			U1TVX	U1TV4	25.86	47.34	31.78	22.77	8.75						
		Interoffice Channel - Dedicated Transport - 56 kbps - per mile per month			U1TDX	1L5XX	0.0115										

UNBUNDLED NETWORK ELEMENTS - Kentucky														Attachment: 2		Exhibit: A	
CATEGORY		RATE ELEMENTS	Interim	Zone	BCS	USOC	RATES ($)					Svc Order Submitted Elec per LSR	Svc Order Submitted Manually per LSR	Incremental Charge - Manual Svc Order vs. Electronic-1st	Incremental Charge - Manual Svc Order vs. Electronic-Add'l	Incremental Charge - Manual Svc Order vs. Electronic-Disc 1st	Incremental Charge - Manual Svc Order vs. Electronic-Disc Add'l
							Rec	Nonrecurring		Nonrecurring Disconnect		OSS Rates ($)					
								First	Add'l	First	Add'l	SOMEC	SOMAN	SOMAN	SOMAN	SOMAN	SOMAN
		Interoffice Channel - Dedicated Transport - 56 kbps - Facility Termination			U1TDX	U1TD5	20.97	47.35	31.78	22.77	8.75						
		Interoffice Channel - Dedicated Transport - 64 kbps - per mile per month			U1TDX	1L5XX	0.0115										
		Interoffice Channel - Dedicated Transport - 64 kbps - Facility Termination			U1TDX	U1TD6	20.97	47.35	31.78	22.77	8.75						
		Interoffice Channel - Dedicated Channel - DS1 - Per Mile per month			U1TD1	1L5XX	0.23										
		Interoffice Channel - Dedicated Tranport - DS1 - Facility Termination			U1TD1	U1TF1	96.04	105.52	98.46	23.09	20.49						
		Interoffice Channel - Dedicated Transport - DS3 - Per Mile per month			U1TD3	1L5XX	4.97										
		Interoffice Channel - Dedicated Transport - DS3 - Facility Termination per month			U1TD3	U1TF3	1,175.15	335.40	219.24	89.57	87.75						
		Interoffice Channel - Dedicated Transport - STS-1 - Per Mile per month			U1TS1	1L5XX	4.97										
		Interoffice Channel - Dedicated Transport - STS-1 - Facility Termination			U1TS1	U1TFS	1,149.51	335.40	219.24	89.57	87.75						
DARK FIBER																	
		Dark Fiber, Four Fiber Strands, Per Route Mile or Fraction Thereof per month - Interoffice Channel			UDF, UDFCX	1L5DF	30.74										
		NRC Dark Fiber - Interoffice Channel			UDF, UDFCX	UDF14		732.53	192.67	377.27	241.67						
		Dark Fiber, Four Fiber Strands, Per Route Mile or Fraction Thereof per month - Local Loop			UDF, UDFCX	1L5DL	47.01										
		NRC Dark Fiber - Local Loop			UDF, UDFCX	UDFL4		732.53	192.67	377.27	241.67						
SIGNALING (CCS7)																	
		CCS7 Signaling Connection, Per link (A link)			UDB	TPP6A	20.71	43.56	43.56	22.45	22.45						
		CCS7 Signaling Connection, Per link (B link) (also known as D link)			UDB	TPP6B	20.71	43.56	43.56	22.45	22.45						
		CCS7 Signaling Connection-A link, per month			UDB	TPP9A	20.71	43.56	43.56	22.45	22.45						
		CCS7 Signaling Connection-B link(also known as D link) per month			UDB	TPP9B	20.71	43.56	43.56	22.45	22.45						
		CCS7 Signaling Usage Surrogate, per link per LATA			UDB	STU56	751.08										
		CCS7 Signaling Point Code, per Originating Point Code Establishment or Change, per STP affected			UDB	CCAPO		46.02	46.02	56.43	56.43						
		CCS7 Signaling Point Code, per Destination Point Code Establishment or Change, Per Stp Affected			UDB	CCAPD		46.02	46.02	56.43	56.43						
E911 SERVICE																	
		Local Channel - Dedicated - 2-wr Voice Grade					18.57	265.78	46.96	46.79	4.98						
		Interoffice Transport - Dedicated - 2-wr Voice Grade Per Mile					0.0115										
		Interoffice Transport - Dedicated - 2-wr Voice Grade Per Facility Termination					29.11	47.34	31.78	22.77	8.75						
		Local Channel - Dedicated - DS1 - Zone 1					40.46	209.60	176.51	30.21	21.07						
		Local Channel - Dedicated - DS1 - Zone 2					43.39	209.60	176.51	30.21	21.07						
		Local Channel - Dedicated - DS1 - Zone 3					164.50	209.60	176.51	30.21	21.07						
		Interoffice Transport - Dedicated - DS1 Per Mile					0.23										
		Interoffice Transport - Dedicated - DS1 Per Facility Termination					96.04	105.52	98.46	23.09	20.49						
SELECTIVE ROUTING																	
		Selective Routing Per Unique Line Class Code Per Request Per Switch						93.53	93.53	15.58	15.58						
ENHANCED EXTENDED LINK (EELs)																	
	NOTE: The monthly recurring and non-recurring charges below will apply and the Switch-As-Is Charge will not apply for UNE combinations provisioned as ' Ordinarily Combined' Network Elements.																
	NOTE: The monthly recurring and the Switch-As-Is Charge and not the non-recurring charges below will apply for UNE combinations provisioned as ' Currently Combined' Network Elements.																
	EXTENTED 2-WIRE VOICE GRADE EXTENDED LOOP WITH DEDICATED DS1 INTEROFFICE TRANSPORT																
		First 2-Wire VG Loop (SL2) in Combination - Zone 1		1	UNCVX	UEAL2	12.67	125.22	60.48	59.69	7.84						
		First 2-Wire VG Loop (SL2) in Combination - Zone 2		2	UNCVX	UEAL2	17.45	125.22	60.48	59.69	7.84						
		First 2-Wire VG Loop (SL2) in Combination - Zone 3		3	UNCVX	UEAL2	33.22	125.22	60.48	59.69	7.84						

UNBUNDLED NETWORK ELEMENTS - Kentucky														Attachment: 2		Exhibit: A	
CATEGORY		RATE ELEMENTS	Interim	Zone	BCS	USOC	RATES ($)					Svc Order Submitted Elec per LSR	Svc Order Submitted Manually per LSR	Incremental Charge - Manual Svc Order vs. Electronic-1st	Incremental Charge - Manual Svc Order vs. Electronic-Add'l	Incremental Charge - Manual Svc Order vs. Electronic-Disc 1st	Incremental Charge - Manual Svc Order vs. Electronic-Disc Add'l
							Rec	Nonrecurring		Nonrecurring Disconnect		OSS Rates ($)					
								First	Add'l	First	Add'l	SOMEC	SOMAN	SOMAN	SOMAN	SOMAN	SOMAN
		Interoffice Transport - Dedicated - DS1 combination - Per Mile per month			UNC1X	1L5XX	0.19										
		Interoffice Transport - Dedicated - DS1 combination - Facility Termination per month			UNC1X	U1TF1	79.02	181.24	123.53	56.72	22.32						
		1/0 Channelization System in combination Per Month			UNC1X	MQ1	113.33	57.26	14.74	1.86	1.67						
		Voice Grade COCI - Per Month			UNCVX	1D1VG	0.62	6.71	4.84								
		Each Additional 2-Wire VG Loop (SL 2) in Combination - Zone 1		1	UNCVX	UEAL2	12.67	125.22	60.48	59.69	7.84						
		Each Additional 2-Wire VG Loop (SL 2) in Combination - Zone 2		2	UNCVX	UEAL2	17.45	125.22	60.48	59.69	7.84						
		Each Additional 2-Wire VG Loop (SL 2) in Combination - Zone 3		3	UNCVX	UEAL2	33.22	125.22	60.48	59.69	7.84						
		Voice Grade COCI - Per Month			UNCVX	1D1VG	0.62	6.71	4.84								
		Nonrecurring Currently Combined Network Elements Switch -As-Is Charge			UNC1X	UNCCC		8.98	8.98	11.17	11.17						
	EXTENDED 4-WIRE VOICE GRADE EXTENDED LOOP WITH DEDICATED DS1 INTEROFFICE TRANSPORT																
		First 4-Wire Analog Voice Grade Loop in Combination - Zone 1		1	UNCVX	UEAL4	29.26	125.22	60.48	59.69	7.84						
		First 4-Wire Analog Voice Grade Loop in Combination - Zone 2		2	UNCVX	UEAL4	34.25	125.22	60.48	59.69	7.84						
		First 4-Wire Analog Voice Grade Loop in Combination - Zone 3		3	UNCVX	UEAL4	85.06	125.22	60.48	59.69	7.84						
		Interoffice Transport - Dedicated - DS1 combination - Per Mile Per Month			UNC1X	1L5XX	0.19										
		Interoffice Transport - Dedicated - DS1 - Facility Termination Per Month			UNC1X	U1TF1	79.02	181.24	123.53	56.72	22.32						
		1/0 Channel System in combination Per Month			UNC1X	MQ1	113.33	57.26	14.74	1.86	1.67						
		Voice Grade COCI in combination - per month			UNCVX	1D1VG	0.62	6.71	4.84								
		Additional 4-Wire Analog Voice Grade Loop in same DS1 Interoffice Transport Combination - Zone 1		1	UNCVX	UEAL4	29.26	125.22	60.48	59.69	7.84						
		Additional 4-Wire Analog Voice Grade Loop in same DS1 Interoffice Transport Combination - Zone 2		2	UNCVX	UEAL4	34.25	125.22	60.48	59.69	7.84						
		Additional 4-Wire Analog Voice Grade Loop in same DS1 Interoffice Transport Combination - Zone 3		3	UNCVX	UEAL4	85.06	125.22	60.48	59.69	7.84						
		Additional Voice Grade COCI in combination - per month			UNCVX	1D1VG	0.62	6.71	4.84								
		Nonrecurring Currently Combined Network Elements Switch -As-Is Charge			UNC1X	UNCCC		8.98	8.98	11.17	11.17						
	EXTENDED 4-WIRE 56 KBPS EXTENDED DIGITAL LOOP WITH DEDICATED DS1 INTEROFFICE TRANSPORT																
		First 4-Wire 56Kbps Digital Grade Loop in Combination - Zone 1		1	UNCDX	UDL56	27.59	125.22	60.48	59.69	7.84						
		First 4-Wire 56Kbps Digital Grade Loop in Combination - Zone 2		2	UNCDX	UDL56	32.48	125.22	60.48	59.69	7.84						
		First 4-Wire 56Kbps Digital Grade Loop in Combination - Zone 3		3	UNCDX	UDL56	36.37	125.22	60.48	59.69	7.84						
		Interoffice Transport - Dedicated - DS1 combination - Per Mile Per Month			UNC1X	1L5XX	0.19										
		Interoffice Transport - Dedicated - DS1 - combination Facility Termination Per Month			UNC1X	U1TF1	79.02	181.24	123.53	56.72	22.32						
		1/0 Channel System in combination Per Month			UNC1X	MQ1	113.33	57.26	14.74	1.86	1.67						
		OCU-DP COCI (data) per month (2.4-64kbs)			UNCDX	1D1DD	1.32	6.71	4.84								
		Additional 4-Wire 56Kbps Digital Grade Loop in same DS1 Interoffice Transport Combination - Zone 1		1	UNCDX	UDL56	27.59	125.22	60.48	59.69	7.84						
		Additional 4-Wire 56Kbps Digital Grade Loop in same DS1 Interoffice Transport Combination - Zone 2		2	UNCDX	UDL56	32.48	125.22	60.48	59.69	7.84						
		Additional 4-Wire 56Kbps Digital Grade Loop in same DS1 Interoffice Transport Combination - Zone 3		3	UNCDX	UDL56	36.37	125.22	60.48	59.69	7.84						
		Additional OCU-DP COCI (data) - in combination per month (2.4-64kbs)			UNCDX	1D1DD	1.32	6.71	4.84								

UNBUNDLED NETWORK ELEMENTS - Kentucky														Attachment: 2		Exhibit: A	
CATEGORY		RATE ELEMENTS	Interim	Zone	BCS	USOC	RATES ($)					Svc Order Submitted Elec per LSR	Svc Order Submitted Manually per LSR	Incremental Charge - Manual Svc Order vs. Electronic-1st	Incremental Charge - Manual Svc Order vs. Electronic-Add'l	Incremental Charge - Manual Svc Order vs. Electronic-Disc 1st	Incremental Charge - Manual Svc Order vs. Electronic-Disc Add'l
							Rec	Nonrecurring		Nonrecurring Disconnect		OSS Rates ($)					
								First	Add'l	First	Add'l	SOMEC	SOMAN	SOMAN	SOMAN	SOMAN	SOMAN
		Nonrecurring Currently Combined Network Elements Switch -As-Is Charge			UNC1X	UNCCC		8.98	8.98	11.17	11.17						
	EXTENDED 4-WIRE 64 KBPS EXTENDED DIGITAL LOOP WITH DEDICATED DS1 INTEROFFICE TRANSPORT																
		First 4-Wire 64Kbps Digital Grade Loop in Combination - Zone 1		1	UNCDX	UDL64	27.59	125.22	60.48	59.69	7.84						
		First 4-Wire 64Kbps Digital Grade Loop in Combination - Zone 2		2	UNCDX	UDL64	32.48	125.22	60.48	59.69	7.84						
		First 4-Wire 64Kbps Digital Grade Loop in Combination - Zone 3		3	UNCDX	UDL64	36.37	125.22	60.48	59.69	7.84						
		Interoffice Transport - Dedicated - DS1 combination - Per Mile Per Month			UNC1X	1L5XX	0.19										
		interoffice Transport - Dedicated - DS1 combination - Facility Termination Per Month			UNC1X	U1TF1	79.02	181.24	123.53	56.72	22.32						
		1/0 Channel System in combination Per Month			UNC1X	MQ1	113.33	57.26	14.74	1.86	1.67						
		OCU-DP COCI (data) - in combination - per month (2.4-64kbs)			UNCDX	1D1DD	1.32	6.71	4.84								
		Additional 4-Wire 64Kbps Digital Grade Loop in same DS1 Interoffice Transport Combination - Zone 1		1	UNCDX	UDL64	27.59	125.22	60.48	59.69	7.84						
		Additional 4-Wire 64Kbps Digital Grade Loop in same DS1 Interoffice Transport Combination - Zone 2		2	UNCDX	UDL64	32.48	125.22	60.48	59.69	7.84						
		Additional 4-Wire 64Kbps Digital Grade Loop in same DS1 Interoffice Transport Combination - Zone 3		3	UNCDX	UDL64	36.37	125.22	60.48	59.69	7.84						
		Additional OCU-DP COCI (data) - in combination - per month (2.4-64kbs)			UNCDX	1D1DD	1.32	6.71	4.84								
		Nonrecurring Currently Combined Network Elements Switch -As-Is Charge			UNC1X	UNCCC		8.98	8.98	11.17	11.17						
	EXTENDED 4-WIRE DS1 DIGITAL EXTENDED LOOP WITH DEDICATED DS1 INTEROFFICE TRANSPORT																
		4-Wire DS1 Digital Loop in Combination - Zone 1		1	UNC1X	USLXX	86.47	210.70	114.60	63.96	17.97						
		4-Wire DS1 Digital Loop in Combination - Zone 2		2	UNC1X	USLXX	114.10	210.70	114.60	63.96	17.97						
		4-Wire DS1 Digital Loop in Combination - Zone 3		3	UNC1X	USLXX	297.76	210.70	114.60	63.96	17.97						
		Interoffice Transport - Dedicated - DS1 combination - Per Mile Per Month			UNC1X	1L5XX	0.19										
		Interoffice Transport - Dedicated - DS1 combination - Facility Termination Per Month			UNC1X	U1TF1	79.02	181.24	123.53	56.72	22.32						
		Nonrecurring Currently Combined Network Elements Switch -As-Is Charge			UNC1X	UNCCC		8.98	8.98	11.17	11.17						
	EXTENDED 4-WIRE DS1 DIGITAL EXTENDED LOOP WITH DEDICATED DS3 INTEROFFICE TRANSPORT																
		First DS1Loop in Combination - Zone 1		1	UNC1X	USLXX	86.47	210.70	114.60	63.96	17.97						
		First DS1Loop in Combination - Zone 2		2	UNC1X	USLXX	114.10	210.70	114.60	63.96	17.97						
		First DS1Loop in Combination - Zone 3		3	UNC1X	USLXX	297.76	210.70	114.60	63.96	17.97						
		Interoffice Transport - Dedicated - DS3 combination - Per Mile Per Month			UNC3X	1L5XX	4.09										
		Interoffice Transport - Dedicated - DS3 - Facility Termination per month			UNC3X	U1TF3	966.89	350.56	141.58	48.00	23.39						
		3/1Channel System in combination per month			UNC3X	MQ3	158.20	115.48	56.53	15.12	5.30						
		DS1 COCI in combination per month			UNC1X	UC1D1	11.80	6.71	4.84								
		Additional DS1Loop in DS3 Interoffice Transport Combination - Zone 1		1	UNC1X	USLXX	86.47	210.70	114.60	63.96	17.97						
		Additional DS1Loop in DS3 Interoffice Transport Combination - Zone 2		2	UNC1X	USLXX	114.10	210.70	114.60	63.96	17.97						
		Additional DS1Loop in DS3 Interoffice Transport Combination - Zone 3		3	UNC1X	USLXX	297.76	210.70	114.60	63.96	17.97						
		Additoinal DS1 COCI in combination per month			UNC1X	UC1D1	11.80	6.71	4.84								
		Nonrecurring Currently Combined Network Elements Switch -As-Is Charge			UNC3X	UNCCC		8.98	8.98	11.17	11.17						
	EXTENDED 2-WIRE VOICE GRADE EXTENDED LOOP/ 2 WIRE VOICE GRADE INTEROFFICE TRANSPORT																
		2-WireVG Loop in combination - Zone 1		1	UNCVX	UEAL2	12.67	125.22	60.48	59.69	7.84						
		2-WireVG Loop in combination - Zone 2		2	UNCVX	UEAL2	17.45	125.22	60.48	59.69	7.84						
		2-WireVG Loop in combination - Zone 3		3	UNCVX	UEAL2	33.22	125.22	60.48	59.69	7.84						

UNBUNDLED NETWORK ELEMENTS - Kentucky														Attachment: 2		Exhibit: A	
CATEGORY		RATE ELEMENTS	Interim	Zone	BCS	USOC	RATES ($)					Svc Order Submitted Elec per LSR	Svc Order Submitted Manually per LSR	Incremental Charge - Manual Svc Order vs. Electronic-1st	Incremental Charge - Manual Svc Order vs. Electronic-Add'l	Incremental Charge - Manual Svc Order vs. Electronic-Disc 1st	Incremental Charge - Manual Svc Order vs. Electronic-Disc Add'l
							Rec	Nonrecurring		Nonrecurring Disconnect		OSS Rates ($)					
								First	Add'l	First	Add'l	SOMEC	SOMAN	SOMAN	SOMAN	SOMAN	SOMAN
		Interoffice Transport - 2-wire VG - Dedicated- Per Mile Per Month			UNCVX	1L5XX	0.01										
		Interoffice Transport - 2-wire VG - Dedicated - Facility Termination per month			UNCVX	U1TV2	23.95	98.09	53.67	56.31	22.42						
		Nonrecurring Currently Combined Network Elements Switch -As-Is Charge			UNCVX	UNCCC		8.98	8.98	11.17	11.17						
	EXTENDED 4-WIRE VOICE GRADE EXTENDED LOOP/ 4 WIRE VOICE GRADE INTEROFFICE TRANSPORT																
		4-WireVG Loop in combination - Zone 1		1	UNCVX	UEAL4	29.26	125.22	60.48	59.69	7.84						
		4-WireVG Loop in combination - Zone 2		2	UNCVX	UEAL4	34.25	125.22	60.48	59.69	7.84						
		4-WireVG Loop in combination - Zone 3		3	UNCVX	UEAL4	85.06	125.22	60.48	59.69	7.84						
		Interoffice Transport - 4-wire VG - Dedicated - Per Mile Per Month			UNCVX	1L5XX	0.01										
		Interoffice Transport - 4-wire VG - Dedicated - Facility Termination per month			UNCVX	U1TV4	21.28	98.09	53.67	56.31	22.42						
		Nonrecurring Currently Combined Network Elements Switch -As-Is Charge			UNCVX	UNCCC		8.98	8.98	11.17	11.17						
	EXTENDED DS3 DIGITAL EXTENDED LOOP WITH DEDICATED DS3 INTEROFFICE TRANSPORT																
		DS3 Local Loop in combination - per mile per month			UNC3X	1L5ND	9.25										
		DS3 Local Loop in combination - Facility Termination per month			UNC3X	UE3PX	308.31	237.36	147.69	83.43	32.67						
		Interoffice Transport - Dedicated - DS3 - Per Mile per month			UNC3X	1L5XX	4.09										
		Interoffice Transport - Dedicated - DS3 combination - Facility Termination per month			UNC3X	U1TF3	966.89	350.56	141.58	48.00	23.39						
		Nonrecurring Currently Combined Network Elements Switch -As-Is Charge			UNC3X	UNCCC		8.98	8.98	11.17	11.17						
	EXTENDED STS-1 DIGITAL EXTENDED LOOP WITH DEDICATED STS-1 INTEROFFICE TRANSPORT																
		STS-1 Local Lolp in combination - per mile per month			UNCSX	1L5ND	9.25										
		STS-1 Local Loop in combination - Facility Termination per month			UNCSX	UDLS1	320.51	237.36	147.69	83.43	32.67						
		Interoffice Transport - Dedicated - STS-1 combination - per mile per month			UNCSX	1L5XX	4.09										
		Interoffice Transport - Dedicated - STS-1 combination - Facility Termination per month			UNCSX	U1TFS	945.79	350.56	141.58	48.00	23.39						
		Nonrecurring Currently Combined Network Elements Switch -As-Is Charge			UNCSX	UNCCC		8.98	8.98	11.17	11.17						
	EXTENDED 2-WIRE ISDN EXTENDED LOOP WITH DS1 INTEROFFICE TRANSPORT																
		First 2-Wire ISDN Loop in Combination - Zone 1		1	UNCNX	U1L2X	18.44	125.22	60.48	59.69	7.84						
		First 2-Wire ISDN Loop in Combination - Zone 2		2	UNCNX	U1L2X	25.08	125.22	60.48	59.69	7.84						
		First 2-Wire ISDN Loop in Combination - Zone 3		3	UNCNX	U1L2X	42.87	125.22	60.48	59.69	7.84						
		Interoffice Transport - Dedicated - DS1 combination - per mile per month			UNC1X	1L5XX	0.19										
		Interoffice Transport - Dedicated - DS1 combination - Facility Termination per month			UNC1X	U1TF1	79.02	181.24	123.53	56.72	22.32						
		1/0 Channel System in combination - per month			UNC1X	MQ1	113.33	57.26	14.74	1.86	1.67						
		2-wire ISDN COCI (BRITE) - in combination - per month			UNCNX	UC1CA	2.84	6.71	4.84								
		Additional 2-wire ISDN Loop in same DS1Interoffice Transport Combination - Zone 1		1	UNCNX	U1L2X	18.44	125.22	60.48	59.69	7.84						
		Additional 2-wire ISDN Loop in same DS1Interoffice Transport Combination - Zone 2		2	UNCNX	U1L2X	25.08	125.22	60.48	59.69	7.84						
		Additional 2-wire ISDN Loop in same DS1Interoffice Transport Combination - Zone 3		3	UNCNX	U1L2X	42.87	125.22	60.48	59.69	7.84						
		Additional 2-wire ISDN COCI (BRITE) - in combination- per month			UNCNX	UC1CA	2.84	6.71	4.84								
		Nonrecurring Currently Combined Network Elements Switch -As-Is Charge			UNC1X	UNCCC		8.98	8.98	11.17	11.17						
	EXTENDED 4-WIRE DS1 DIGITAL EXTENDED LOOP WITH DEDICATED STS-1 INTEROFFICE TRANSPORT																
		First DS1 Loop Combination - Zone 1		1	UNC1X	USLXX	86.47	210.70	114.60	63.96	17.97						
		First DS1 Loop Combination - Zone 2		2	UNC1X	USLXX	114.10	210.70	114.60	63.96	17.97						
		First DS1 Loop Combination - Zone 3		3	UNC1X	USLXX	297.76	210.70	114.60	63.96	17.97						

UNBUNDLED NETWORK ELEMENTS - Kentucky														Attachment: 2		Exhibit: A	
CATEGORY		RATE ELEMENTS	Interim	Zone	BCS	USOC	RATES ($)					Svc Order Submitted Elec per LSR	Svc Order Submitted Manually per LSR	Incremental Charge - Manual Svc Order vs. Electronic-1st	Incremental Charge - Manual Svc Order vs. Electronic-Add'l	Incremental Charge - Manual Svc Order vs. Electronic-Disc 1st	Incremental Charge - Manual Svc Order vs. Electronic-Disc Add'l
							Rec	Nonrecurring		Nonrecurring Disconnect		OSS Rates ($)					
								First	Add'l	First	Add'l	SOMEC	SOMAN	SOMAN	SOMAN	SOMAN	SOMAN
		Interoffice Transport - Dedicated - STS-1 combination - Per Mile Per Month			UNCSX	1L5XX	4.09										
		Interoffice Transport - Dedicated - STS-1 combination - Facility Termination per month			UNCSX	U1TFS	945.79	350.56	141.58	48.00	23.39						
		3/1 Channel System in combination per month			UNCSX	MQ3	158.20	115.48	56.53	15.12	5.30						
		DS1 COCI in combination per month			UNC1X	UC1D1	11.80	6.71	4.84								
		Additional DS1Loop in the same STS-1 Interoffice Transport Combination - Zone 1		1	UNC1X	USLXX	86.47	210.70	114.60	63.96	17.97						
		Additional DS1Loop in the same STS-1 Interoffice Transport Combination - Zone 2		2	UNC1X	USLXX	114.10	210.70	114.60	63.96	17.97						
		Additional DS1Loop in the same STS-1 Interoffice Transport Combination - Zone 3		3	UNC1X	USLXX	297.76	210.70	114.60	63.96	17.97						
		DS1 COCI in combination per month			UNC1X	UC1D1	11.80	6.71	4.84								
		Nonrecurring Currently Combined Network Elements Switch -As-Is Charge			UNCSX	UNCCC		8.98	8.98	11.17	11.17						
	EXTENDED 4-WIRE 56 KBPS DIGITAL EXTENDED LOOP WITH 56 KBPS INTEROFFICE TRANSPORT																
		4-wire 56 kbps Local Loop in combination - Zone 1		1	UNCDX	UDL56	27.59	125.22	60.48	59.69	7.84						
		4-wire 56 kbps Local Loop in combination - Zone 2		2	UNCDX	UDL56	32.48	125.22	60.48	59.69	7.84						
		4-wire 56 kbps Local Loop in combination - Zone 3		3	UNCDX	UDL56	36.37	125.22	60.48	59.69	7.84						
		Interoffice Transport - Dedicated - 4-wire 56 kbps combination - Per Mile per month			UNCDX	1L5XX	0.01										
		Interoffice Transport - Dedicated - 4-wire 56 kbps combination - Facility Termination per month			UNCDX	U1TD5	17.25	98.09	53.67	56.31	22.42						
		Nonrecurring Currently Combined Network Elements Switch -As-Is Charge			UNCDX	UNCCC		8.98	8.98	11.17	11.17						
	EXTENDED 4-WIRE 64 KBPS DIGITAL EXTENDED LOOP WITH 64 KBPS INTEROFFICE TRANSPORT																
		4-wire 64 kbps Lcoal Loop in Combination - Zone 1		1	UNCDX	UDL64	27.59	125.22	60.48	59.69	7.84						
		4-wire 64 kbps Lcoal Loop in Combination - Zone 2		2	UNCDX	UDL64	32.48	125.22	60.48	59.69	7.84						
		4-wire 64 kbps Lcoal Loop in Combination - Zone 3		3	UNCDX	UDL64	36.37	125.22	60.48	59.69	7.84						
		Interoffice Transport - Dedicated - 4-wire 64 kbps combination - Per Mile per month			UNCDX	1L5XX	0.01										
		Interoffice Transport - Dedicated - 4-wire 64 kbps combination - Facility Termination per month			UNCDX	U1TD6	17.25	98.09	53.67	56.31	22.42						
		Nonrecurring Currently Combined Network Elements Switch -As-Is Charge			UNCDX	UNCCC		8.98	8.98	11.17	11.17						
	EXTENDED 2-WIRE VOICE GRADE LOOP WITH DS1 INTEROFFICE TRANSPORT w/ 3/1 MUX																
		First 2-wire VG Loop (SL2) in Combination - Zone 1		1	UNCVX	UEAL2	12.67	125.22	60.48	59.69	7.84						
		First 2-wire VG Loop (SL2) in Combination - Zone 2		2	UNCVX	UEAL2	17.45	125.22	60.48	59.69	7.84						
		First 2-wire VG Loop (SL2) in Combination - Zone 3		3	UNCVX	UEAL2	33.22	125.22	60.48	59.69	7.84						
		First Interoffice Transport - Dedicated - DS1 combination - Per Mile			UNC1X	1L5XX	0.19										
		First Interoffice Transport - Dedicated - DS1 combination - Facility Termination per month			UNC1X	U1TF1	79.02	181.24	123.53	56.72	22.32						
		Per each DS1 Channelization System Per Month			UNC1X	MQ1	113.33	57.26	14.74	1.86	1.67						
		Per each Voice Grade COCI - Per Month per month			UNCVX	1D1VG	0.62	6.71	4.84								
		3/1 Channel System in combination per month			UNC3X	MQ3	158.20	115.48	56.53	15.12	5.30						
		Per each DS1 COCI in combination per month			UNC1X	UC1D1	11.80	6.71	4.84								
		Each Additional 2-Wire VG Loop(SL 2) in the same DS1 Interoffice Transport Combination - Zone 1		1	UNCVX	UEAL2	12.67	125.22	60.48	59.69	7.84						
		Each Additional 2-Wire VG Loop(SL2) in the same DS1 Interoffice Transport Combination - Zone 2		2	UNCVX	UEAL2	17.45	125.22	60.48	59.69	7.84						
		Each Additional 2-Wire VG Loop(SL2) in the same DS1 Interoffice Transport Combination - Zone 3		3	UNCVX	UEAL2	33.22	125.22	60.48	59.69	7.84						
		Each Additional Voice Grade COCI in combination - per month			UNCVX	1D1VG	0.62	6.71	4.84								
		Each Additional DS1 Interoffice Channel per mile in same 3/1 Channel System per month			UNC1X	1L5XX	0.19										
		Each Additional DS1 Interoffice Channel Facility Termination in same 3/1 Channel System per month			UNC1X	U1TF1	79.02	181.24	123.53	56.72	22.32						
		Each Additional DS1 COCI combination per month			UNC1X	UC1D1	11.80	6.71	4.84								

UNBUNDLED NETWORK ELEMENTS - Kentucky														Attachment: 2		Exhibit: A	
CATEGORY		RATE ELEMENTS	Interim	Zone	BCS	USOC	RATES ($)					Svc Order Submitted Elec per LSR	Svc Order Submitted Manually per LSR	Incremental Charge - Manual Svc Order vs. Electronic-1st	Incremental Charge - Manual Svc Order vs. Electronic-Add'l	Incremental Charge - Manual Svc Order vs. Electronic-Disc 1st	Incremental Charge - Manual Svc Order vs. Electronic-Disc Add'l
							Rec	Nonrecurring		Nonrecurring Disconnect		OSS Rates ($)					
								First	Add'l	First	Add'l	SOMEC	SOMAN	SOMAN	SOMAN	SOMAN	SOMAN
		Nonrecurring Currently Combined Network Elements Switch -As-Is Charge			UNC1X	UNCCC		8.98	8.98	11.17	11.17						
	EXTENDED 4-WIRE VOICE GRADE LOOP WITH DEDICATED DS1 INTEROFFICE TRANSPORT w/ 3/1 MUX																
		First 4-Wire Analog Voice Grade Local Loop in Combination - Zone 1		1	UNCVX	UEAL4	29.26	125.22	60.48	59.69	7.84						
		First 4-Wire Analog Voice Grade Local Loop in Combination - Zone 2		2	UNCVX	UEAL4	34.25	125.22	60.48	59.69	7.84						
		First 4-Wire Analog Voice Grade Local Loop in Combination - Zone 3		3	UNCVX	UEAL4	85.06	125.22	60.48	59.69	7.84						
		First Interoffice Transport - Dedicated - DS1 combination - Per Mile Per Month			UNC1X	1L5XX	0.19										
		First Interoffice Transport - Dedicated - DS1 - Facility Termination Per Month			UNC1X	U1TF1	79.02	181.24	123.53	56.72	22.32						
		Per each 1/0 Channel System in combination Per Month			UNC1X	MQ1	113.33	57.26	14.74	1.86	1.67						
		Per each Voice Grade COCI in combination - per month			UNCVX	1D1VG	0.62	6.71	4.84								
		3/1 Channel System in combination per month			UNC3X	MQ3	158.20	115.48	56.53	15.12	5.30						
		Per each DS1 COCI in combination per month			UNC1X	UC1D1	11.80	6.71	4.84								
		Additional 4-Wire Analog Voice Grade Loop in same DS1 Interoffice Transport Combination - Zone 1		1	UNCVX	UEAL4	29.26	125.22	60.48	59.69	7.84						
		Additional 4-Wire Analog Voice Grade Loop in same DS1 Interoffice Transport Combination - Zone 2		2	UNCVX	UEAL4	34.25	125.22	60.48	59.69	7.84						
		Additional 4-Wire Analog Voice Grade Loop in same DS1 Interoffice Transport Combination - Zone 3		3	UNCVX	UEAL4	85.06	125.22	60.48	59.69	7.84						
		Each Additional DS1 Interoffice Channel per mile in same 3/1 Channel System per month			UNC1X	1L5XX	0.19										
		Each Additional DS1 Interoffice Channel Facility Termination in same 3/1 Channel System per month			UNC1X	U1TF1	79.02	181.24	123.53	56.72	22.32						
		Additional Voice Grade COCI - in combination - per month			UNCVX	1D1VG	0.62	6.71	4.84								
		Nonrecurring Currently Combined Network Elements Switch -As-Is Charge			UNC1X	UNCCC		8.98	8.98	11.17	11.17						
	EXTENDED 4-WIRE 56 KBPS DIGITAL LOOP WITH DEDICATED DS1 INTEROFFICE TRANSPORT w/ 3/1 MUX																
		First 4-Wire 56Kbps Digital Grade Local Loop in Combination - Zone 1		1	UNCDX	UDL56	27.59	125.22	60.48	59.69	7.84						
		First 4-Wire 56Kbps Digital Grade Local Loop in Combination - Zone 2		2	UNCDX	UDL56	32.48	125.22	60.48	59.69	7.84						
		First 4-Wire 56Kbps Digital Grade Local Loop in Combination - Zone 3		3	UNCDX	UDL56	36.37	125.22	60.48	59.69	7.84						
		First Interoffice Transport - Dedicated - DS1 combination - Per Mile Per Month			UNC1X	1L5XX	0.19										
		First Interoffice Transport - Dedicated - DS1 - combination Facility Termination Per Month			UNC1X	U1TF1	79.02	181.24	123.53	56.72	22.32						
		Per each 1/0 Channel System in combination Per Month			UNC1X	MQ1	113.33	57.26	14.74	1.86	1.67						
		Per each OCU-DP COCI (data) COCI per month (2.4-64kbs)			UNCDX	1D1DD	1.32	6.71	4.84								
		3/1 Channel System in combination per month			UNC3X	MQ3	158.20	115.48	56.53	15.12	5.30						
		Per each DS1 COCI in combination per month			UNC1X	UC1D1	11.80	6.71	4.84								
		Additional 4-Wire 56Kbps Digital Grade Loop in same DS1 Interoffice Transport Combination - Zone 1		1	UNCDX	UDL56	27.59	125.22	60.48	59.69	7.84						
		Additional 4-Wire 56Kbps Digital Grade Loop in same DS1 Interoffice Transport Combination - Zone 2		2	UNCDX	UDL56	32.48	125.22	60.48	59.69	7.84						
		Additional 4-Wire 56Kbps Digital Grade Loop in same DS1 Interoffice Transport Combination - Zone 3		3	UNCDX	UDL56	36.37	125.22	60.48	59.69	7.84						
		OCU-DP COCI (data) COCI in combination per month (2.4-64kbs)			UNCDX	1D1DD	1.32	6.71	4.84								
		Each Additional DS1 Interoffice Channel per mile in same 3/1 Channel System per month			UNC1X	1L5XX	0.19										
		Each Additional DS1 Interoffice Channel Facility Termination in same 3/1 Channel System per month			UNC1X	U1TF1	79.02	181.24	123.53	56.72	22.32						
		Each Additional DS1 COCI in the same 3/1 channel system combination per month			UNC1X	UC1D1	11.80	6.71	4.84								

UNBUNDLED NETWORK ELEMENTS - Kentucky														Attachment: 2		Exhibit: A	
CATEGORY		RATE ELEMENTS	Interim	Zone	BCS	USOC	RATES ($)					Svc Order Submitted Elec per LSR	Svc Order Submitted Manually per LSR	Incremental Charge - Manual Svc Order vs. Electronic-1st	Incremental Charge - Manual Svc Order vs. Electronic-Add'l	Incremental Charge - Manual Svc Order vs. Electronic-Disc 1st	Incremental Charge - Manual Svc Order vs. Electronic-Disc Add'l
							Rec	Nonrecurring		Nonrecurring Disconnect		OSS Rates ($)					
								First	Add'l	First	Add'l	SOMEC	SOMAN	SOMAN	SOMAN	SOMAN	SOMAN
		Nonrecurring Currently Combined Network Elements Switch -As-Is Charge			UNC1X	UNCCC		8.98	8.98	11.17	11.17						
	EXTENDED 4-WIRE 64 KBPS DIGITAL LOOP WITH DEDICATED DS1 INTEROFFICE TRANSPORT w/ 3/1 MUX																
		First 4-Wire 64Kbps Digital Grade Loop in a DS1 Interoffice Transport Combination - Zone 1		1	UNCDX	UDL64	27.59	125.22	60.48	59.69	7.84						
		First 4-Wire 64Kbps Digital Grade Loop in a DS1 Interoffice Transport Combination - Zone 2		2	UNCDX	UDL64	32.48	125.22	60.48	59.69	7.84						
		First 4-Wire 64Kbps Digital Grade Loop in a DS1 Interoffice Transport Combination - Zone 3		3	UNCDX	UDL64	36.37	125.22	60.48	59.69	7.84						
		First Interoffice Transport - Dedicated - DS1 combination - Per Mile Per Month			UNC1X	1L5XX	0.19										
		First Interoffice Transport - Dedicated - DS1 combination - Facility Termination Per Month			UNC1X	U1TF1	79.02	181.24	123.53	56.72	22.32						
		Per each Channel System 1/0 in combination Per Month			UNC1X	MQ1	113.33	57.26	14.74	1.86	1.67						
		Per each OCU-DP COCI (data) in combination - per month (2.4-64kbs)			UNCDX	1D1DD	1.32	6.71	4.84								
		3/1 Channel System in combination per month			UNC3X	MQ3	158.20	115.48	56.53	15.12	5.30						
		Additional 4-Wire 64Kbps Digital Grade Loop in same DS1 Interoffice Transport Combination - Zone 1		1	UNCDX	UDL64	27.59	125.22	60.48	59.69	7.84						
		Additional 4-Wire 64Kbps Digital Grade Loop in same DS1 Interoffice Transport Combination - Zone 2		2	UNCDX	UDL64	32.48	125.22	60.48	59.69	7.84						
		Additional 4-Wire 64Kbps Digital Grade Loop in same DS1 Interoffice Transport Combination - Zone 3		3	UNCDX	UDL64	36.37	125.22	60.48	59.69	7.84						
		Additional OCU-DP COCI (data) - DS1 to DS0 Channel System combination - per month (2.4-64kbs)			UNCDX	1D1DD	1.32	6.71	4.84								
		Each Additional DS1 Interoffice Channel per mile in same 3/1 Channel System per month			UNC1X	1L5XX	0.19										
		Each Additional DS1 Interoffice Channel Facility Termination in same 3/1 Channel System per month			UNC1X	U1TF1	79.02	181.24	123.53	56.72	22.32						
		Each Additional DS1 COCI in the same 3/1 channel system combination per month			UNC1X	UC1D1	11.80	6.71	4.84								
		Nonrecurring Currently Combined Network Elements Switch -As-Is Charge			UNC1X	UNCCC		8.98	8.98	11.17	11.17						
	EXTENDED 2-WIRE ISDN LOOP WITH DS1 INTEROFFICE TRANSPORT w/ 3/1 MUX																
		First 2-Wire ISDN Loop in a DS1 Interoffice Combination Transport - Zone 1		1	UNCNX	U1L2X	18.44	125.22	60.48	59.69	7.84						
		First 2-Wire ISDN Loop in a DS1 Interoffice Combination Transport - Zone 2		2	UNCNX	U1L2X	25.08	125.22	60.48	59.69	7.84						
		First 2-Wire ISDN Loop in a DS1 Interoffice Combination Transport - Zone 3		3	UNCNX	U1L2X	42.87	125.22	60.48	59.69	7.84						
		First Interoffice Transport - Dedicated - DS1 combination - Per Mile per month			UNC1X	1L5XX	0.19										
		First Interoffice Transport - Dedicated - DS1 combination - Facility Termination per month			UNC1X	U1TF1	79.02	181.24	123.53	56.72	22.32						
		Per each Channel System 1/0 in combination - per month			UNC1X	MQ1	113.33	57.26	14.74	1.86	1.67						
		Per each 2-wire ISDN COCI (BRITE) in combination - per month			UNCNX	UC1CA	2.84	6.71	4.84								
		3/1 Channel System in combination per month			UNC3X	MQ3	158.20	115.48	56.53	15.12	5.30						
		Per each DS1 COCI in combination per month			UNC1X	UC1D1	11.80	6.71	4.84								
		Additional 2-wire ISDN Loop in same DS1Interoffice Transport Combination - Zone 1		1	UNCNX	U1L2X	18.44	125.22	60.48	59.69	7.84						
		Additional 2-wire ISDN Loop in same DS1Interoffice Transport Combination - Zone 2		2	UNCNX	U1L2X	25.08	125.22	60.48	59.69	7.84						
		Additional 2-wire ISDN Loop in same DS1Interoffice Transport Combination - Zone 3		3	UNCNX	U1L2X	42.87	125.22	60.48	59.69	7.84						
		Additional 2-wire ISDN COCI (BRITE) in same 1/0 channel system combination- per month			UNCNX	UC1CA	2.84	6.71	4.84								
		Each Additional DS1 Interoffice Channel per mile in same 3/1 Channel System per month			UNC1X	1L5XX	0.19										

UNBUNDLED NETWORK ELEMENTS - Kentucky														Attachment: 2		Exhibit: A	
CATEGORY		RATE ELEMENTS	Interim	Zone	BCS	USOC	RATES ($)					Svc Order Submitted Elec per LSR	Svc Order Submitted Manually per LSR	Incremental Charge - Manual Svc Order vs. Electronic-1st	Incremental Charge - Manual Svc Order vs. Electronic-Add'l	Incremental Charge - Manual Svc Order vs. Electronic-Disc 1st	Incremental Charge - Manual Svc Order vs. Electronic-Disc Add'l
							Rec	Nonrecurring		Nonrecurring Disconnect		OSS Rates ($)					
								First	Add'l	First	Add'l	SOMEC	SOMAN	SOMAN	SOMAN	SOMAN	SOMAN
		Each Additional DS1 Interoffice Channel Facility Termination in same 3/1 Channel System per month			UNC1X	U1TF1	79.02	181.24	123.53	56.72	22.32						
		Each Additional DS1 COCI in the same 3/1 channel system combination per month			UNC1X	UC1D1	11.80	6.71	4.84								
		Nonrecurring Currently Combined Network Elements Switch -As-Is Charge			UNC1X	UNCCC		8.98	8.98	11.17	11.17						
	EXTENDED 4-WIRE DS1 LOOP WITH DEDICATED DS1 INTEROFFICE TRANSPORT w/ 3/1 MUX																
		First 4-wire DS1 Digital Lcoal Loop in Combination - Zone 1		1	UNC1X	USLXX	86.47	210.70	114.60	63.96	17.97						
		First 4-wire DS1 Digital Lcoal Loop in Combination - Zone 2		2	UNC1X	USLXX	114.10	210.70	114.60	63.96	17.97						
		First 4-wire DS1 Digital Lcoal Loop in Combination - Zone 3		3	UNC1X	USLXX	297.76	210.70	114.60	63.96	17.97						
		First Interoffice Transport - Dedicated - DS1 combination - Per Mile Per Month			UNC1X	1L5XX	0.19										
		First Interoffice Transport - Dedicated - DS1 combination - Facility Termination Per Month			UNC1X	U1TF1	79.02	181.24	123.53	56.72	22.32						
		3/1 Channel System in combination per month			UNC3X	MQ3	158.20	115.48	56.53	15.12	5.30						
		Per each DS1 COCI combination per month			UNC1X	UC1D1	11.80	6.71	4.84								
		Each Additional DS1 Interoffice Channel per mile in same 3/1 Channel System per month			UNC1X	1L5XX	0.19										
		Each Additional DS1 Interoffice Channel Facility Termination in same 3/1 Channel System per month			UNC1X	U1TF1	79.02	181.24	123.53	56.72	22.32						
		Each Additional DS1 COCI in the same 3/1 channel system combination per month			UNC1X	UC1D1	11.80	6.71	4.84								
		Additional 4-Wire DS1 Digital Local Loop in Combination - Zone 1		1	UNC1X	USLXX	86.47	210.70	114.60	63.96	17.97						
		Additional 4-Wire DS1 Digital Local Loop in Combination - Zone 2		2	UNC1X	USLXX	114.10	210.70	114.60	63.96	17.97						
		Additional 4-Wire DS1 Digital Local Loop in Combination - Zone 3		3	UNC1X	USLXX	297.76	210.70	114.60	63.96	17.97						
		Nonrecurring Currently Combined Network Elements Switch -As-Is Charge			UNC1X	UNCCC		8.98	8.98	11.17	11.17						
	EXTENDED 4-WIRE 56 KBPS DIGITAL EXTENDED LOOP WITH DS0 INTEROFFICE TRANSPORT																
		First 4-wire 56 kbps Local Loop in combination - Zone 1		1	UNCDX	UDL56	27.59	125.22	60.48	59.69	7.84						
		First 4-wire 56 kbps Local Loop in combination - Zone 2		2	UNCDX	UDL56	32.48	125.22	60.48	59.69	7.84						
		First 4-wire 56 kbps Local Loop in combination - Zone 3		3	UNCDX	UDL56	36.37	125.22	60.48	59.69	7.84						
		First 4-wiree 56 kbps Interoffice Transport - Dedicated - Per Mile per month			UNCDX	1L5XX	0.01										
		First 4-wire 56 kbps Interoffice Transport - Dedicated - Facility Termination per month			UNCDX	U1TD5	17.25	98.09	53.67	56.31	22.42						
		Nonrecurring Currently Combined Network Elements Switch -As-Is Charge			UNCDX	UNCCC		8.98	8.98	11.17	11.17						
	EXTENDED 4-WIRE 64 KBPS DIGITAL EXTENDED LOOP WITH DS0 INTEROFFICE TRANSPORT																
		First 4-wire 64 kbps Local Loop in combination - Zone 1		1	UNCDX	UDL64	27.59	125.22	60.48	59.69	7.84						
		First 4-wire 64 kbps Local Loop in combination - Zone 2		2	UNCDX	UDL64	32.48	125.22	60.48	59.69	7.84						
		First 4-wire 64 kbps Local Loop in combination - Zone 3		3	UNCDX	UDL64	36.37	125.22	60.48	59.69	7.84						
		First I4-wire 65 kbps Interoffice Transport - Dedicated - Per Mile per month			UNCDX	1L5XX	0.01										
		First 4-wire 64 kbps Interoffice Transport - Dedicated - Facility Termination per month			UNCDX	U1TD6	17.25	98.09	53.67	56.31	22.42						
		Nonrecurring Currently Combined Network Elements Switch -As-Is Charge			UNCDX	UNCCC		8.98	8.98	11.17	11.17						
ADDITIONAL NETWORK ELEMENTS																	
	When used as a part of a currently combined facility, the non-recurrng charges do not apply, but a Switch As Is charge does apply.																
	When used as ordinarily combined network elements in All States, the non-recurring charges apply and the Switch As Is Charge does not.																
		Nonrecurring Currently Combined Network Elements Switch -As-Is Charge - 2 wire/4-Wire VG			UNCVX	UNCCC		8.98	8.98	11.17	11.17						
		Nonrecurring Currently Combined Network Elements Switch -As-Is Charge - 56/64 kbps			UNCDX	UNCCC		8.98	8.98	11.17	11.17						
	MULTIPLEXERS																
		DS1 to DS0 Channel System per month			UNC1X	MQ1	113.33	57.26	14.74	1.86	1.67						

UNBUNDLED NETWORK ELEMENTS - Kentucky														Attachment: 2		Exhibit: A	
CATEGORY		RATE ELEMENTS	Interim	Zone	BCS	USOC	RATES ($)					Svc Order Submitted Elec per LSR	Svc Order Submitted Manually per LSR	Incremental Charge - Manual Svc Order vs. Electronic-1st	Incremental Charge - Manual Svc Order vs. Electronic-Add'l	Incremental Charge - Manual Svc Order vs. Electronic-Disc 1st	Incremental Charge - Manual Svc Order vs. Electronic-Disc Add'l
							Rec	Nonrecurring		Nonrecurring Disconnect		OSS Rates ($)					
								First	Add'l	First	Add'l	SOMEC	SOMAN	SOMAN	SOMAN	SOMAN	SOMAN
		OCU-DP COCI (data) - DS1 to DS0 Channel System - per month (2.4-64kbs) used for a Local Loop			UDL	1D1DD	1.32	10.07	7.08								
		OCU-DP COCI (data) - DS1 to DS0 Channel System - per month (2.4-64kbs) used for connection to a channelized DS1 Local Channel in the same SWC as collocation			U1TUD	1D1DD	1.32	10.07	7.08								
		2-wire ISDN COCI (BRITE) - DS1 to DS0 Channel Systsem - per month for a Local Loop			UDN	UC1CA	2.84	10.07	7.08								
		2-wire ISDN COCI (BRITE) - DS1 to DS0 Channel Systsem - per month used for connection to a channelized DS1 Local Channel in the same SWC as collocation			U1TUB	UC1CA	2.84	10.07	7.08								
		Voice Grade COCI - DS1 to DS0 Channel System - per month used for a Local Loop			UEA	1D1VG	0.6228	10.07	7.08								
		Voice Grade COCI - DS1 to DS0 Channel System - per month used for connection to a channelized DS1 Local Channel in the same SWC as collocation			U1TUC	1D1VG	0.6228	10.07	7.08								
		DS3 to DS1 Channel System per month			UNC3X	MQ3	158.20	115.48	56.53	15.12	5.30						
		STS-1 to DS1 Channel System per month			UNCSX	MQ3	158.20	115.48	56.53	15.12	5.30						
		DS1 COCI used with Loop per month			USL	UC1D1	11.80	10.07	7.08								
		DS1 COCI (used for connection to a channelized DS1 Local Channel in the same SWC as collocation) per month			U1TUA	UC1D1	11.80	10.07	7.08								
		DS1 COCI used with Interoffice Channel per month			U1TD1	UC1D1	11.80	10.07	7.08								
		DS3 Interface Unit (DS1 COCI) used with Local Channel per month			ULDD1	UC1D1	11.80	10.07	7.08								

UNBUNDLED NETWORK ELEMENTS - Louisiana														Attachment: 2		Exhibit: A	
CATEGORY		RATE ELEMENTS	Interim	Zone	BCS	USOC	RATES ($)					Svc Order Submitted Elec per LSR	Svc Order Submitted Manually per LSR	Incremental Charge - Manual Svc Order vs. Electronic-1st	Incremental Charge - Manual Svc Order vs. Electronic-Add'l	Incremental Charge - Manual Svc Order vs. Electronic-Disc 1st	Incremental Charge - Manual Svc Order vs. Electronic-Disc Add'l
							Rec	Nonrecurring		Nonrecurring Disconnect		OSS Rates ($)					
								First	Add'l	First	Add'l	SOMEC	SOMAN	SOMAN	SOMAN	SOMAN	SOMAN
	The "Zone" shown in the sections for stand-alone loops or loops as part of a combination refers to Geographically Deaveraged UNE Zones. To view Geographically Deaveraged UNE Zone Designations by Central Office, refer to internet Website: http://www.interconnection.bellsouth.com/become_a_clec/html/interconnection.htm																
OPERATIONAL SUPPORT SYSTEMS (OSS) - "REGIONAL RATES"																	
	NOTE: (1) CLEC should contact its contract negotiator if it prefers the "state specific" OSS charges as ordered by the State Commissions. The OSS charges currently contained in this rate exhibit are the BellSouth "regional" service ordering charges. CLEC may elect either the state specific Commission ordered rates for the service ordering charges, or CLEC may elect the regional service ordering charge, however, CLEC can not obtain a mixture of the two regardless if CLEC has a interconnection contract established in each of the 9 states.																
	NOTE: (2) Any element that can be ordered electronically will be billed according to the SOMEC rate listed in this category. Please refer to BellSouth's Local Ordering Handbook (LOH) to determine if a product can be ordered electronically. For those elements that cannot be ordered electronically at present per the LOH, the listed SOMEC rate in this category reflects the charge that would be billed to a CLEC once electronic ordering capabilities come on-line for that element. Otherwise, the manual ordering charge, SOMAN, will be applied to a CLECs bill when it submits an LSR to BellSouth.																
		OSS - Electronic Service Order Charge, Per Local Service Request (LSR) - UNE Only				SOMEC		3.50	0.00	3.50	0.00						
		OSS - Manual Service Order Charge, Per Local Service Request (LSR) - UNE Only				SOMAN		15.20	0.00	15.20	0.00						
UNE SERVICE DATE ADVANCEMENT CHARGE																	
	NOTE: The Expedite charge will be maintained commensurate with BellSouth's FCC No.1 Tariff, Section 5 as applicable.																
		UNE Expedite Charge per Circuit or Line Assignable USOC, per Day			UAL, UEANL, UCL, UEF, UDF, UEQ, UDL, UENTW, UDN, UEA, UHL, ULC, USL, U1T12, U1T48, U1TD1, U1TD3, U1TDX, U1TO3, U1TS1, U1TVX, UC1BC, UC1BL, UC1CC, UC1CL, UC1DC, UC1DL, UC1EC, UC1EL, UC1FC, UC1FL, UC1GC, UC1GL, UC1HC, UC1HL, UDL12, UDL48, UDLO3, UDLSX, UE3, ULD12, ULD48, ULDD1, ULDD3, ULDDX, ULDO3, ULDS1, ULDVX, UNC1X, UNC3X, UNCDX, UNCNX, UNCSX, UNCVX, UNLD1, UNLD3, UXTD1, UXTD3, UXTS1, U1TUC, U1TUD, U1TUB, U1TUA	SDASP		200.00									
UNBUNDLED EXCHANGE ACCESS LOOP																	
	2-WIRE ANALOG VOICE GRADE LOOP																
		2-Wire Analog Voice Grade Loop - Service Level 1- Zone 1		1	UEANL	UEAL2	12.90	36.54	16.87								
		2-Wire Analog Voice Grade Loop - Service Level 1- Zone 2		2	UEANL	UEAL2	23.33	36.54	16.87								
		2-Wire Analog Voice Grade Loop - Service Level 1- Zone 3		3	UEANL	UEAL2	48.43	36.54	16.87								
		2-Wire Analog Voice Grade Loop - Service Level 1- Zone 1		1	UEANL	UEASL	12.90	36.54	16.87								
		2-Wire Analog Voice Grade Loop - Service Level 1- Zone 2		2	UEANL	UEASL	23.33	36.54	16.87								
		2-Wire Analog Voice Grade Loop - Service Level 1- Zone 3		3	UEANL	UEASL	48.43	36.54	16.87								
		Unbundled Miscellaneous Rate Element, Tag Loop at End User Premise			UEANL	URETL		8.33	0.83								
		Loop Testing - Basic 1st Half Hour			UEANL	URET1		33.17	33.17								
		Loop Testing - Basic Additional Half Hour			UEANL	URETA		19.28	19.28								

UNBUNDLED NETWORK ELEMENTS - Louisiana													Attachment: 2		Exhibit: A	
CATEGORY	RATE ELEMENTS	Interim	Zone	BCS	USOC	RATES ($)					Svc Order Submitted Elec per LSR	Svc Order Submitted Manually per LSR	Incremental Charge - Manual Svc Order vs. Electronic-1st	Incremental Charge - Manual Svc Order vs. Electronic-Add'l	Incremental Charge - Manual Svc Order vs. Electronic-Disc 1st	Incremental Charge - Manual Svc Order vs. Electronic-Disc Add'l
						Rec	Nonrecurring		Nonrecurring Disconnect		OSS Rates ($)					
							First	Add'l	First	Add'l	SOMEC	SOMAN	SOMAN	SOMAN	SOMAN	SOMAN
	CLEC to CLEC Conversion Charge Without Outside Dispatch (UVL-SL1)			UEANL	UREWO		15.75	8.93								
	Unbundled Voice Loop, Non-Design Voice Loop, billing for BST providing make-up (Engineering Information - E.I.)			UEANL	UEANM		13.04	13.04								
	Manual Order Coordination for UVL-SL1s (per loop)			UEANL	UEAMC		7.92	7.92								
	Order Coordination for Specified Conversion Time for UVL-SL1 (per LSR)			UEANL	OCOSL		17.56	17.56								
2-WIRE Unbundled COPPER LOOP																
	2-Wire Unbundled Copper Loop - Non-Designed Zone 1		1	UEQ	UEQ2X	12.40	35.27	15.60								
	2 Wire Unbundled Copper Loop - Non-Designed - Zone 2		2	UEQ	UEQ2X	14.32	35.27	15.60								
	2 Wire Unbundled Copper Loop - Non-Designed - Zone 3		3	UEQ	UEQ2X	16.87	35.27	15.60								
	Unbundled Miscellaneous Rate Element, Tag Loop at End User Premise			UEQ	URETL		8.33	0.83								
	Manual Order Coordination 2 Wire Unbundled Copper Loop - Non-Designed (per loop)			UEQ	USBMC		7.92	7.92								
	Unbundled Copper Loop, Non-Design Copper Loop, billing for BST providing make-up (Engineering Information - E.I.)			UEQ	UEQMU		13.04	13.04								
	Loop Testing - Basic 1st Half Hour			UEQ	URET1		33.17	33.17								
	Loop Testing - Basic Additional Half Hour			UEQ	URETA		19.28	19.28								
	CLEC to CLEC Conversion Charge Without Outside Dispatch (UCL-ND)			UEQ	UREWO		14.25	7.42								
UNBUNDLED EXCHANGE ACCESS LOOP																
2-WIRE ANALOG VOICE GRADE LOOP																
	2-Wire Analog Voice Grade Loop - Service Level 2 w/Loop or Ground Start Signaling - Zone 1		1	UEA	UEAL2	14.93	102.10	65.72								
	2-Wire Analog Voice Grade Loop - Service Level 2 w/Loop or Ground Start Signaling - Zone 2		2	UEA	UEAL2	25.35	102.10	65.72								
	2-Wire Analog Voice Grade Loop - Service Level 2 w/Loop or Ground Start Signaling - Zone 3		3	UEA	UEAL2	50.46	102.10	65.72								
	Order Coordination for Specified Conversion Time (per LSR)			UEA	OCOSL		17.56									
	2-Wire Analog Voice Grade Loop - Service Level 2 w/Reverse Battery Signaling - Zone 1		1	UEA	UEAR2	14.93	102.10	65.72								
	2-Wire Analog Voice Grade Loop - Service Level 2 w/Reverse Battery Signaling - Zone 2		2	UEA	UEAR2	25.35	102.10	65.72								
	2-Wire Analog Voice Grade Loop - Service Level 2 w/Reverse Battery Signaling - Zone 3		3	UEA	UEAR2	50.46	102.10	65.72								
	Order Coordination for Specified Conversion Time (per LSR)			UEA	OCOSL		17.56									
	CLEC to CLEC Conversion Charge without outside dispatch			UEA	UREWO		87.59	36.30								
	Loop Tagging - Service Level 2 (SL2)			UEA	URETL		11.20	1.10								
4-WIRE ANALOG VOICE GRADE LOOP																
	4-Wire Analog Voice Grade Loop - Zone 1		1	UEA	UEAL4	30.81	127.40	91.02								
	4-Wire Analog Voice Grade Loop - Zone 2		2	UEA	UEAL4	38.32	127.40	91.02								
	4-Wire Analog Voice Grade Loop - Zone 3		3	UEA	UEAL4	60.39	127.40	91.02								
	Order Coordination for Specified Conversion Time (per LSR)			UEA	OCOSL		17.56									
	CLEC to CLEC Conversion Charge without outside dispatch			UEA	UREWO		87.59	36.30								
2-WIRE ISDN DIGITAL GRADE LOOP																
	2-Wire ISDN Digital Grade Loop - Zone 1		1	UDN	U1L2X	22.09	113.34	76.96								
	2-Wire ISDN Digital Grade Loop - Zone 2		2	UDN	U1L2X	35.28	113.34	76.96								
	2-Wire ISDN Digital Grade Loop - Zone 3		3	UDN	U1L2X	65.18	113.34	76.96								
	Order Coordination For Specified Conversion Time (per LSR)			UDN	OCOSL		17.56									
	CLEC to CLEC Conversion Charge without outside dispatch			UDN	UREWO		91.49	44.09								
2-WIRE ASYMMETRICAL DIGITAL SUBSCRIBER LINE (ADSL) COMPATIBLE LOOP																
	2 Wire Unbundled ADSL Loop including manual service inquiry & facility reservation - Zone 1		1	UAL	UAL2X	12.29	117.08	68.36								
	2 Wire Unbundled ADSL Loop including manual service inquiry & facility reservation - Zone 2		2	UAL	UAL2X	14.09	117.08	68.36								
	2 Wire Unbundled ADSL Loop including manual service inquiry & facility reservation - Zone 3		3	UAL	UAL2X	15.75	117.08	68.36								
	Order Coordination for Specified Conversion Time (per LSR)			UAL	OCOSL		17.56									

UNBUNDLED NETWORK ELEMENTS - Louisiana													Attachment: 2		Exhibit: A	
CATEGORY	RATE ELEMENTS	Interim	Zone	BCS	USOC	RATES ($)					Svc Order Submitted Elec per LSR	Svc Order Submitted Manually per LSR	Incremental Charge - Manual Svc Order vs. Electronic-1st	Incremental Charge - Manual Svc Order vs. Electronic-Add'l	Incremental Charge - Manual Svc Order vs. Electronic-Disc 1st	Incremental Charge - Manual Svc Order vs. Electronic-Disc Add'l
						Rec	Nonrecurring		Nonrecurring Disconnect		OSS Rates ($)					
							First	Add'l	First	Add'l	SOMEC	SOMAN	SOMAN	SOMAN	SOMAN	SOMAN
	2 Wire Unbundled ADSL Loop without manual service inquiry & facility reservaton - Zone 1		1	UAL	UAL2W	12.29	92.83	56.02								
	2 Wire Unbundled ADSL Loop without manual service inquiry & facility reservaton - Zone 2		2	UAL	UAL2W	14.09	92.83	56.02								
	2 Wire Unbundled ADSL Loop without manual service inquiry & facility reservaton - Zone 3		3	UAL	UAL2W	15.75	92.83	56.02								
	Order Coordination for Specified Conversion Time (per LSR)			UAL	OCOSL		17.56									
	CLEC to CLEC Conversion Charge without outside dispatch			UAL	UREWO		86.07	40.34								
	2-WIRE HIGH BIT RATE DIGITAL SUBSCRIBER LINE (HDSL) COMPATIBLE LOOP															
	2 Wire Unbundled HDSL Loop including manual service inquiry & facility reservation - Zone 1		1	UHL	UHL2X	9.79	125.50	76.77								
	2 Wire Unbundled HDSL Loop including manual service inquiry & facility reservation - Zone 2		2	UHL	UHL2X	11.52	125.50	76.77								
	2 Wire Unbundled HDSL Loop including manual service inquiry & facility reservation - Zone 3		3	UHL	UHL2X	12.74	125.50	76.77								
	Order Coordination for Specified Conversion Time (per LSR)			UHL	OCOSL		17.56									
	2 Wire Unbundled HDSL Loop without manual service inquiry and facility reservation - Zone 1		1	UHL	UHL2W	9.79	101.24	64.43								
	2 Wire Unbundled HDSL Loop without manual service inquiry and facility reservation - Zone 2		2	UHL	UHL2W	11.52	101.24	64.43								
	2 Wire Unbundled HDSL Loop without manual service inquiry and facility reservation - Zone 3		3	UHL	UHL2W	12.74	101.24	64.43								
	Order Coordination for Specified Conversion Time (per LSR)			UHL	OCOSL		17.56									
	CLEC to CLEC Conversion Charge without outside dispatch			UHL	UREWO		86.00	40.34								
	4-WIRE HIGH BIT RATE DIGITAL SUBSCRIBER LINE (HDSL) COMPATIBLE LOOP															
	4 Wire Unbundled HDSL Loop including manual service inquiry and facility reservation - Zone 1		1	UHL	UHL4X	16.24	153.26	104.54								
	4-Wire Unbundled HDSL Loop including manual service inquiry and facility reservation - Zone 2		2	UHL	UHL4X	16.65	153.26	104.54								
	4-Wire Unbundled HDSL Loop including manual service inquiry and facility reservation - Zone 3		3	UHL	UHL4X	17.34	153.26	104.54								
	Order Coordination for Specified Conversion Time (per LSR)			UHL	OCOSL		17.56									
	4-Wire Unbundled HDSL Loop without manual service inquiry and facility reservation - Zone 1		1	UHL	UHL4W	16.24	129.00	92.20								
	4-Wire Unbundled HDSL Loop without manual service inquiry and facility reservation - Zone 2		2	UHL	UHL4W	16.65	129.00	92.20								
	4-Wire Unbundled HDSL Loop without manual service inquiry and facility reservation - Zone 3		3	UHL	UHL4W	17.34	129.00	92.20								
	Order Coordination for Specified Conversion Time (per LSR)			UHL	OCOSL		17.56									
	CLEC to CLEC Conversion Charge without outside dispatch			UHL	UREWO		86.00	40.34								
	4-WIRE DS1 DIGITAL LOOP															
	4-Wire DS1 Digital Loop - Zone 1		1	USL, NTCD1	USLXX	85.70	245.16	152.98								
	4-Wire DS1 Digital Loop - Zone 2		2	USL, NTCD1	USLXX	194.96	245.16	152.98								
	4-Wire DS1 Digital Loop - Zone 3		3	USL, NTCD1	USLXX	491.94	245.16	152.98								
	Order Coordination for Specified Conversion Time (per LSR)			USL, NTCD1	OCOSL		17.56									
	CLEC to CLEC Conversion Charge without outside dispatch			USL, NTCD1	UREWO		100.93	42.98								
	4-WIRE 19.2, 56 OR 64 KBPS DIGITAL GRADE LOOP															
	4 Wire Unbundled Digital 19.2 Kbps		1	UDL	UDL19	30.99	121.86	85.48								
	4 Wire Unbundled Digital 19.2 Kbps		2	UDL	UDL19	36.78	121.86	85.48								
	4 Wire Unbundled Digital 19.2 Kbps		3	UDL	UDL19	38.92	121.86	85.48								
	4 Wire Unbundled Digital Loop 56 Kbps - Zone 1		1	UDL	UDL56	30.99	121.86	85.48								
	4 Wire Unbundled Digital Loop 56 Kbps - Zone 2		2	UDL	UDL56	36.78	121.86	85.48								
	4 Wire Unbundled Digital Loop 56 Kbps - Zone 3		3	UDL	UDL56	38.92	121.86	85.48								
	Order Coordination for Specified Conversion Time (per LSR)			UDL	OCOSL		17.56									
	4 Wire Unbundled Digital Loop 64 Kbps - Zone 1		1	UDL	UDL64	30.99	121.86	85.48								
	4 Wire Unbundled Digital Loop 64 Kbps - Zone 2		2	UDL	UDL64	36.78	121.86	85.48								
	4 Wire Unbundled Digital Loop 64 Kbps - Zone 3		3	UDL	UDL64	38.92	121.86	85.48								
	Order Coordination for Specified Conversion Time (per LSR)			UDL	OCOSL		17.56									
	CLEC to CLEC Conversion Charge without outside dispatch			UDL	UREWO		101.97	49.67								

UNBUNDLED NETWORK ELEMENTS - Louisiana														Attachment: 2		Exhibit: A	
CATEGORY		RATE ELEMENTS	Interim	Zone	BCS	USOC	RATES ($)					Svc Order Submitted Elec per LSR	Svc Order Submitted Manually per LSR	Incremental Charge - Manual Svc Order vs. Electronic-1st	Incremental Charge - Manual Svc Order vs. Electronic-Add'l	Incremental Charge - Manual Svc Order vs. Electronic-Disc 1st	Incremental Charge - Manual Svc Order vs. Electronic-Disc Add'l
							Rec	Nonrecurring		Nonrecurring Disconnect		OSS Rates ($)					
								First	Add'l	First	Add'l	SOMEC	SOMAN	SOMAN	SOMAN	SOMAN	SOMAN
	2-WIRE Unbundled COPPER LOOP																
		2-Wire Unbundled Copper Loop-Designed including manual service inquiry & facility reservation - Zone 1		1	UCL	UCLPB	12.29	116.18	67.46								
		2-Wire Unbundled Copper Loop-Designed including manual service inquiry & facility reservation - Zone 2		2	UCL	UCLPB	14.09	116.18	67.46								
		2 Wire Unbundled Copper Loop-Designed including manual service inquiry & facility reservation - Zone 3		3	UCL	UCLPB	15.75	116.18	67.46								
		Order Coordination for Unbundled Copper Loops (per loop)			UCL	UCLMC		7.92	7.92								
		2-Wire Unbundled Copper Loop-Designed without manual service inquiry and facility reservation - Zone 1		1	UCL	UCLPW	12.29	91.92	55.12								
		2-Wire Unbundled Copper Loop-Designed without manual service inquiry and facility reservation - Zone 2		2	UCL	UCLPW	14.09	91.92	55.12								
		2-Wire Unbundled Copper Loop-Designed without manual service inquiry and facility reservation - Zone 3		3	UCL	UCLPW	15.75	91.92	55.12								
		Order Coordination for Unbundled Copper Loops (per loop)			UCL	UCLMC		7.92	7.92								
		CLEC to CLEC Conversion Charge without outside dispatch (UCL-Des)			UCL	UREWO		91.92	42.47								
	4-WIRE COPPER LOOP																
		4-Wire Copper Loop-Designed including manual service inquiry and facility reservation - Zone 1		1	UCL	UCL4S	22.27	139.69	90.96								
		4-Wire Copper Loop-Designed including manual service inquiry and facility reservation - Zone 2		2	UCL	UCL4S	18.95	139.69	90.96								
		4-Wire Copper Loop-Designed including manual service inquiry and facility reservation - Zone 3		3	UCL	UCL4S	10.99	139.69	90.96								
		Order Coordination for Unbundled Copper Loops (per loop)			UCL	UCLMC		7.92	7.92								
		4-Wire Copper Loop-Designed without manual service inquiry and facility reservation - Zone 1		1	UCL	UCL4W	22.27	115.43	78.63								
		4-Wire Copper Loop-Designed without manual service inquiry and facility reservation - Zone 2		2	UCL	UCL4W	18.95	115.43	78.63								
		4-Wire Copper Loop-Designed without manual service inquiry and facility reservation - Zone 3		3	UCL	UCL4W	10.99	115.43	78.63								
		Order Coordination for Unbundled Copper Loops (per loop)			UCL	UCLMC		7.92	7.92								
		CLEC to CLEC Conversion Charge without outside dispatch (UCL-Des)			UCL	UREWO		91.92	42.47								
LOOP MODIFICATION																	
		Unbundled Loop Modification, Removal of Load Coils - 2 Wire pair less than or equal to 18k ft, per Unbundled Loop			UAL, UHL, UCL, UEQ, ULS, UEA, UEANL, UEPSR, UEPSB	ULM2L		0.00	0.00								
		Unbundled Loop Modification Removal of Load Coils - 4 Wire less than or equal to 18K ft, per Unbundled Loop			UHL, UCL, UEA	ULM4L		0.00	0.00								
		Unbundled Loop Modification Removal of Bridged Tap Removal, per unbundled loop			UAL, UHL, UCL, UEQ, ULS, UEA, UEANL, UEPSR, UEPSB	ULMBT		12.15	12.15								
SUB-LOOPS																	
	Sub-Loop Distribution																
		Sub-Loop - Per Cross Box Location - CLEC Feeder Facility Set-Up	I		UEANL	USBSA		144.09	144.09								
		Sub-Loop - Per Cross Box Location - Per 25 Pair Panel Set-Up	I		UEANL	USBSB		10.99	10.99								
		Sub-Loop - Per Building Equipment Room - CLEC Feeder Facility Set-Up	I		UEANL	USBSC		86.16	86.16								
		Sub-Loop - Per Building Equipment Room - Per 25 Pair Panel Set-Up	I		UEANL	USBSD		27.13	27.13								
		Sub-Loop Distribution Per 2-Wire Analog Voice Grade Loop - Zone 1	I	1	UEANL	USBN2	7.57	63.89	30.06								
		Sub-Loop Distribution Per 2-Wire Analog Voice Grade Loop - Zone 2	I	2	UEANL	USBN2	12.75	63.89	30.06								

UNBUNDLED NETWORK ELEMENTS - Louisiana														Attachment: 2		Exhibit: A	
CATEGORY		RATE ELEMENTS	Interim	Zone	BCS	USOC	RATES ($)					Svc Order Submitted Elec per LSR	Svc Order Submitted Manually per LSR	Incremental Charge - Manual Svc Order vs. Electronic-1st	Incremental Charge - Manual Svc Order vs. Electronic-Add'l	Incremental Charge - Manual Svc Order vs. Electronic-Disc 1st	Incremental Charge - Manual Svc Order vs. Electronic-Disc Add'l
							Rec	Nonrecurring		Nonrecurring Disconnect		OSS Rates ($)					
								First	Add'l	First	Add'l	SOMEC	SOMAN	SOMAN	SOMAN	SOMAN	SOMAN
		Sub-Loop Distribution Per 2-Wire Analog Voice Grade Loop - Zone 3	I	3	UEANL	USBN2	21.45	63.89	30.06								
		Order Coordination for Unbundled Sub-Loops, per sub-loop pair			UEANL	USBMC		7.92	7.92								
		Sub-Loop Distribution Per 4-Wire Analog Voice Grade Loop - Zone 1		1	UEANL	USBN4	11.76	76.75	42.92								
		Sub-Loop Distribution Per 4-Wire Analog Voice Grade Loop - Zone 2		2	UEANL	USBN4	16.84	76.75	42.92								
		Sub-Loop Distribution Per 4-Wire Analog Voice Grade Loop - Zone 3		3	UEANL	USBN4	19.27	76.75	42.92								
		Order Coordination for Unbundled Sub-Loops, per sub-loop pair			UEANL	USBMC		7.92	7.92								
		Sub-Loop 2-Wire Intrabuilding Network Cable (INC)	I		UEANL	USBR2	2.91	51.48	17.65								
		Order Coordination for Unbundled Sub-Loops, per sub-loop pair			UEANL	USBMC		7.92	7.92								
		Sub-Loop 4-Wire Intrabuilding Network Cable (INC)	I		UEANL	USBR4	6.58	57.54	23.71								
		Order Coordination for Unbundled Sub-Loops, per sub-loop pair			UEANL	USBMC		7.92	7.92								
		Loop Testing - Basic 1st Half Hour			UEANL	URET1		33.17	33.17								
		Loop Testing - Basic Additional Half Hour			UEANL	URETA		19.28	19.28								
		2 Wire Copper Unbundled Sub-Loop Distribution - Zone 1	I	1	UEF	UCS2X	6.26	63.89	30.06								
		2 Wire Copper Unbundled Sub-Loop Distribution - Zone 2	I	2	UEF	UCS2X	10.07	63.89	30.06								
		2 Wire Copper Unbundled Sub-Loop Distribution - Zone 3	I	3	UEF	UCS2X	12.70	63.89	30.06								
		Order Coordination for Unbundled Sub-Loops, per sub-loop pair			UEF	USBMC		7.92	7.92								
		4 Wire Copper Unbundled Sub-Loop Distribution - Zone 1	I	1	UEF	UCS4X	8.03	76.75	42.92								
		4 Wire Copper Unbundled Sub-Loop Distribution - Zone 2	I	2	UEF	UCS4X	10.71	76.75	42.92								
		4 Wire Copper Unbundled Sub-Loop Distribution - Zone 3	I	3	UEF	UCS4X	6.08	76.75	42.92								
		Order Coordination for Unbundled Sub-Loops, per sub-loop pair			UEF	USBMC		7.92	7.92								
		Loop Testing - Basic 1st Half Hour			UEF	URET1		33.17	33.17								
		Loop Testing - Basic Additional Half Hour			UEF	URETA		19.28	19.28								
	Unbundled Network Terminating Wire (UNTW)																
		Unbundled Network Terminating Wire (UNTW) per Pair			UENTW	UENPP	0.3454	14.72	14.72								
	Network Interface Device (NID)																
		Network Interface Device (NID) - 1-2 lines			UENTW	UND12		42.26	27.83								
		Network Interface Device (NID) - 1-6 lines			UENTW	UND16		62.86	48.43								
		Network Interface Device Cross Connect - 2 W			UENTW	UNDC2		5.73	5.73								
		Network Interface Device Cross Connect - 4W			UENTW	UNDC4		5.73	5.73								
UNE OTHER, PROVISIONING ONLY - NO RATE																	
		NID - Dispatch and Service Order for NID installation			UENTW	UNDBX	0.00	0.00									
		UNTW Circuit Id Establishment, Provisioning Only - No Rate			UENTW	UENCE	0.00	0.00									
		Unbundled Contract Name, Provisioning Only - No Rate			UEANL,UEF,UEQ,UENTW	UNECN	0.00	0.00									
HIGH CAPACITY UNBUNDLED LOCAL LOOP																	
		High Capacity Unbundled Local Loop - DS3 - Per Mile per month			UE3	1L5ND	10.04										
		High Capacity Unbundled Local Loop - DS3 - Facility Termination per month			UE3	UE3PX	362.34	438.46	256.30								
		High Capacity Unbundled Local Loop - STS-1 - Per Mile per month			UDLSX	1L5ND	10.04										
		High Capacity Unbundled Local Loop - STS-1 - Facility Termination per month			UDLSX	UDLS1	374.56	438.46	256.30								
LOOP MAKE-UP																	
		Loop Makeup - Preordering Without Reservation, per working or spare facility queried (Manual).			UMK	UMKLW		23.29	23.29								
		Loop Makeup - Preordering With Reservation, per spare facility queried (Manual).			UMK	UMKLP		24.70	24.70								

UNBUNDLED NETWORK ELEMENTS - Louisiana														Attachment: 2		Exhibit: A	
CATEGORY		RATE ELEMENTS	Interim	Zone	BCS	USOC	RATES ($)					Svc Order Submitted Elec per LSR	Svc Order Submitted Manually per LSR	Incremental Charge - Manual Svc Order vs. Electronic-1st	Incremental Charge - Manual Svc Order vs. Electronic-Add'l	Incremental Charge - Manual Svc Order vs. Electronic-Disc 1st	Incremental Charge - Manual Svc Order vs. Electronic-Disc Add'l
							Rec	Nonrecurring		Nonrecurring Disconnect		OSS Rates ($)					
								First	Add'l	First	Add'l	SOMEC	SOMAN	SOMAN	SOMAN	SOMAN	SOMAN
		Loop Makeup--With or Without Reservation, per working or spare facility queried (Mechanized)			UMK	UMKMQ		0.19	0.19								
LINE SHARING AND LINE SPLITTING																	
	NOTE 1: The Line Sharing monthly recurring rates for all installations completed from October 02, 2003 through midnight October 01, 2004 shall be billed as follows:																
	NOTE 1: 10/02/2003 – 10/01/2004: 25% of the rate for an unbundled copper loop non-designed ("UCLND")																
	NOTE 1: 10/02/2004 – 10/01/2005: 50% of the rate for UCLND																
	NOTE 1: 10/02/2005 – 10/01/2006: 75% of the rate for UCLND																
	NOTE 1: Above will apply to USOCS: ULSDT and ULSCT																
	**NOTE 2: The Line Sharing monthly recurring rates with USOCs ULSDC and ULSCC applies only to circuits installed and inservice on or before October 1, 2003																
	LINE SHARING																
	SPLITTERS-CENTRAL OFFICE BASED																
		Line Sharing Splitter, per System 96 Line Capacity			ULS	ULSDA	187.17	183.33	0.00								
		Line Sharing Splitter, per System 24 Line Capacity			ULS	ULSDB	46.79	183.33	0.00								
		Line Sharing Splitter, Per System, 8 Line Capacity			ULS	ULSD8	15.59	183.33	0.00								
		Line Sharing-DLEC Owned Splitter in CO-CFA activaton-deactivation (per LSOD)			ULS	ULSDG		83.98	0.00								
	END USER ORDERING-CENTRAL OFFICE BASED LINE SHARING																
		Line Sharing - per Line Activation (BST Owned splitter) - OBSOLETE see **NOTE 2			ULS	ULSDC	0.61	17.97	10.29								
		Line Share Service, TRO per line activation, BST owned splitter - Central Office Located (50% of UCLND) - please see NOTE 1 (E:10/2/2004)			ULS	ULSDT	6.20	17.97	10.29								
		Line Share Service, TRO per line activation, BST owned splitter - Central Office Located (75% of UCLND) - please see NOTE 1 (E:10/2/2005)			ULS	ULSDT	9.30	17.97	10.29								
		Line Sharing - per Subsequent Activity per Line Rearrangement(BST Owned Splitter)			ULS	ULSDS		15.91	7.95								
		Line Sharing - per Subsequent Activity per Line Rearrangement(DLEC Owned Splitter)			ULS	ULSCS		15.91	7.95								
		Line Sharing - per Line Activation (DLEC owned Splitter) - OBSOLETE see **NOTE 2			ULS	ULSCC	0.61	47.44	19.31								
		Line Share Service, TRO per line activation, CLEC owned splitter - Central Office Located (50% of UCLND) - please see NOTE 1 (E:10/2/2004)			ULS	ULSCT	6.20	47.44	19.31								
		Line Share Service, TRO per line activation, CLEC owned splitter - Central Office Located (75% of UCLND) - please see NOTE 1 (E:10/2/2005)			ULS	ULSCT	9.30	47.44	19.31								
	LINE SPLITTING																
	MAINTENANCE																
		No Trouble Found - per 1/2 hour increments - Basic						80.00	55.00								
		No Trouble Found - per 1/2 hour increments - Overtime						120.00	82.50								
		No Trouble Found - per 1/2 hour increments - Premium						160.00	110.00								
UNBUNDLED DEDICATED TRANSPORT																	
	INTEROFFICE CHANNEL - DEDICATED TRANSPORT																
		Interoffice Channel - Dedicated Transport - 2-Wire Voice Grade - Per Mile per month			U1TVX	1L5XX	0.013										
		Interoffice Channel - Dedicated Transport- 2- Wire Voice Grade - Facility Termination			U1TVX	U1TV2	22.60	39.36	26.62								
		Interoffice Channel - Dedicated Transpor t- 2-Wire Voice Grade Rev Bat. - Per Mile per month			U1TVX	1L5XX	0.013										
		Interoffice Channel - Dedicated Transport- 2- Wire VG Rev Bat. - Facility Termination			U1TVX	U1TR2	22.60	39.36	26.62								
		Interoffice Channel - Dedicated Transport - 4-Wire Voice Grade - Per Mile per month			U1TVX	1L5XX	0.013										
		Interoffice Channel - Dedicated Transport - 4- Wire Voice Grade - Facility Termination			U1TVX	U1TV4	19.81	39.36	26.62								
		Interoffice Channel - Dedicated Transport - 56 kbps - per mile per month			U1TDX	1L5XX	0.013										

UNBUNDLED NETWORK ELEMENTS - Louisiana														Attachment: 2		Exhibit: A	
CATEGORY		RATE ELEMENTS	Interim	Zone	BCS	USOC	RATES ($)					Svc Order Submitted Elec per LSR	Svc Order Submitted Manually per LSR	Incremental Charge - Manual Svc Order vs. Electronic-1st	Incremental Charge - Manual Svc Order vs. Electronic-Add'l	Incremental Charge - Manual Svc Order vs. Electronic-Disc 1st	Incremental Charge - Manual Svc Order vs. Electronic-Disc Add'l
							Rec	Nonrecurring		Nonrecurring Disconnect		OSS Rates ($)					
								First	Add'l	First	Add'l	SOMEC	SOMAN	SOMAN	SOMAN	SOMAN	SOMAN
		Interoffice Channel - Dedicated Transport - 56 kbps - Facility Termination			U1TDX	U1TD5	15.61	39.37	26.62								
		Interoffice Channel - Dedicated Transport - 64 kbps - per mile per month			U1TDX	1L5XX	0.013										
		Interoffice Channel - Dedicated Transport - 64 kbps - Facility Termination			U1TDX	U1TD6	15.61	39.37	26.62								
		Interoffice Channel - Dedicated Channel - DS1 - Per Mile per month			U1TD1	1L5XX	0.2652										
		Interoffice Channel - Dedicated Tranport - DS1 - Facility Termination			U1TD1	U1TF1	70.47	86.69	79.44								
		Interoffice Channel - Dedicated Transport - DS3 - Per Mile per month			U1TD3	1L5XX	6.04										
		Interoffice Channel - Dedicated Transport - DS3 - Facility Termination per month			U1TD3	U1TF3	850.45	270.69	158.05								
		Interoffice Channel - Dedicated Transport - STS-1 - Per Mile per month			U1TS1	1L5XX	6.04										
		Interoffice Channel - Dedicated Transport - STS-1 - Facility Termination			U1TS1	U1TFS	830.19	270.69	158.05								
DARK FIBER																	
		Dark Fiber, Four Fiber Strands, Per Route Mile or Fraction Thereof per month - Interoffice Channel			UDF, UDFCX	1L5DF	25.28										
		NRC Dark Fiber - Interoffice Channel			UDF, UDFCX	UDF14		620.60	133.88								
		Dark Fiber, Four Fiber Strands, Per Route Mile or Fraction Thereof per month - Local Loop			UDF, UDFCX	1L5DL	52.23										
		NRC Dark Fiber - Local Loop			UDF, UDFCX	UDFL4		620.60	133.88								
SIGNALING (CCS7)																	
		CCS7 Signaling Termination, Per STP Port			UDB	PT8SX	147.60										
		CCS7 Signaling Connection, Per link (A link)			UDB	TPP6A	15.77	34.50	34.50								
		CCS7 Signaling Connection, Per link (B link) (also known as D link)			UDB	TPP6B	15.77	34.50	34.50								
		CCS7 Signaling Connection-A link, per month			UDB	TPP9A	15.77	34.50	34.50								
		CCS7 Signaling Connection-B link(also known as D link) per month			UDB	TPP9B	15.77	34.50	34.50								
		CCS7 Signaling Usage Surrogate, per link per LATA			UDB	STU56	732.10										
		CCS7 Signaling Point Code, per Originating Point Code Establishment or Change, per STP affected			UDB	CCAPO		28.17	28.17								
		CCS7 Signaling Point Code, per Destination Point Code Establishment or Change, Per Stp Affected			UDB	CCAPD		28.17	28.17								
E911 SERVICE																	
		Local Channel - Dedicated - 2-wr Voice Grade - Zone 1					18.32	187.51	32.21								
		Local Channel - Dedicated - 2-wr Voice Grade - Zone 2					18.32	187.51	32.21								
		Local Channel - Dedicated - 2-wr Voice Grade - Zone 3					18.32	187.51	32.21								
		Interoffice Transport - Dedicated - 2-wr Voice Grade Per Mile					0.013										
		Interoffice Transport - Dedicated - 2-wr Voice Grade Per Facility Termination					22.60	39.36	26.62								
		Local Channel - Dedicated - DS1 - Zone 1					39.18	172.34	149.27								
		Local Channel - Dedicated - DS1 - Zone 2					121.58	172.34	149.27								
		Local Channel - Dedicated - DS1 - Zone 3					70.02	172.34	149.27								
		Interoffice Transport - Dedicated - DS1 Per Mile					0.2652										
		Interoffice Transport - Dedicated - DS1 Per Facility Termination					70.47	86.69	79.44								
SELECTIVE ROUTING																	
		Selective Routing Per Unique Line Class Code Per Request Per Switch						82.25	82.25								
ENHANCED EXTENDED LINK (EELs)																	
	NOTE: The monthly recurring and non-recurring charges below will apply and the Switch-As-Is Charge will not apply for UNE combinations provisioned as ' Ordinarily Combined' Network Elements.																
	NOTE: The monthly recurring and the Switch-As-Is Charge and not the non-recurring charges below will apply for UNE combinations provisioned as ' Currently Combined' Network Elements.																
	EXTENTED 2-WIRE VOICE GRADE EXTENDED LOOP WITH DEDICATED DS1 INTEROFFICE TRANSPORT																
		First 2-Wire VG Loop (SL2) in Combination - Zone 1		1	UNCVX	UEAL2	14.93	94.21	45.09								

UNBUNDLED NETWORK ELEMENTS - Louisiana														Attachment: 2		Exhibit: A	
CATEGORY		RATE ELEMENTS	Interim	Zone	BCS	USOC	RATES ($)					Svc Order Submitted Elec per LSR	Svc Order Submitted Manually per LSR	Incremental Charge - Manual Svc Order vs. Electronic-1st	Incremental Charge - Manual Svc Order vs. Electronic-Add'l	Incremental Charge - Manual Svc Order vs. Electronic-Disc 1st	Incremental Charge - Manual Svc Order vs. Electronic-Disc Add'l
							Rec	Nonrecurring		Nonrecurring Disconnect		OSS Rates ($)					
								First	Add'l	First	Add'l	SOMEC	SOMAN	SOMAN	SOMAN	SOMAN	SOMAN
		First 2-Wire VG Loop (SL2) in Combination - Zone 2		2	UNCVX	UEAL2	25.35	94.21	45.09								
		First 2-Wire VG Loop (SL2) in Combination - Zone 3		3	UNCVX	UEAL2	50.46	94.21	45.09								
		Interoffice Transport - Dedicated - DS1 combination - Per Mile per month			UNC1X	1L5XX	0.2652										
		Interoffice Transport - Dedicated - DS1 combination - Facility Termination per month			UNC1X	U1TF1	70.47	143.58	103.88								
		1/0 Channelization System in combination Per Month			UNC1X	MQ1	105.09	59.97	12.96								
		Voice Grade COCI - Per Month			UNCVX	1D1VG	0.6497	5.91	4.26								
		Each Additional 2-Wire VG Loop (SL 2) in Combination - Zone 1		1	UNCVX	UEAL2	14.93	94.21	45.09								
		Each Additional 2-Wire VG Loop (SL 2) in Combination - Zone 2		2	UNCVX	UEAL2	25.35	94.21	45.09								
		Each Additional 2-Wire VG Loop (SL 2) in Combination - Zone 3		3	UNCVX	UEAL2	50.46	94.21	45.09								
		Voice Grade COCI - Per Month			UNCVX	1D1VG	0.6497	5.91	4.26								
		Nonrecurring Currently Combined Network Elements Switch -As-Is Charge			UNC1X	UNCCC		5.43	5.43								
	EXTENDED 4-WIRE VOICE GRADE EXTENDED LOOP WITH DEDICATED DS1 INTEROFFICE TRANSPORT																
		First 4-Wire Analog Voice Grade Loop in Combination - Zone 1		1	UNCVX	UEAL4	30.81	94.21	45.09								
		First 4-Wire Analog Voice Grade Loop in Combination - Zone 2		2	UNCVX	UEAL4	38.32	94.21	45.09								
		First 4-Wire Analog Voice Grade Loop in Combination - Zone 3		3	UNCVX	UEAL4	60.39	94.21	45.09								
		Interoffice Transport - Dedicated - DS1 combination - Per Mile Per Month			UNC1X	1L5XX	0.2652										
		Interoffice Transport - Dedicated - DS1 - Facility Termination Per Month			UNC1X	U1TF1	70.47	143.58	103.88								
		1/0 Channel System in combination Per Month			UNC1X	MQ1	105.09	59.97	12.96								
		Voice Grade COCI in combination - per month			UNCVX	1D1VG	0.6497	5.91	4.26								
		Additional 4-Wire Analog Voice Grade Loop in same DS1 Interoffice Transport Combination - Zone 1		1	UNCVX	UEAL4	30.81	94.21	45.09								
		Additional 4-Wire Analog Voice Grade Loop in same DS1 Interoffice Transport Combination - Zone 2		2	UNCVX	UEAL4	38.32	94.21	45.09								
		Additional 4-Wire Analog Voice Grade Loop in same DS1 Interoffice Transport Combination - Zone 3		3	UNCVX	UEAL4	60.39	94.21	45.09								
		Additional Voice Grade COCI in combination - per month			UNCVX	1D1VG	0.6497	5.91	4.26								
		Nonrecurring Currently Combined Network Elements Switch -As-Is Charge			UNC1X	UNCCC		5.43	5.43								
	EXTENDED 4-WIRE 56 KBPS EXTENDED DIGITAL LOOP WITH DEDICATED DS1 INTEROFFICE TRANSPORT																
		First 4-Wire 56Kbps Digital Grade Loop in Combination - Zone 1		1	UNCDX	UDL56	30.99	94.21	45.09								
		First 4-Wire 56Kbps Digital Grade Loop in Combination - Zone 2		2	UNCDX	UDL56	36.78	94.21	45.09								
		First 4-Wire 56Kbps Digital Grade Loop in Combination - Zone 3		3	UNCDX	UDL56	38.92	94.21	45.09								
		Interoffice Transport - Dedicated - DS1 combination - Per Mile Per Month			UNC1X	1L5XX	0.2652										
		Interoffice Transport - Dedicated - DS1 - combination Facility Termination Per Month			UNC1X	U1TF1	70.47	143.58	103.88								
		1/0 Channel System in combination Per Month			UNC1X	MQ1	105.09	59.97	12.96								
		OCU-DP COCI (data) per month (2.4-64kbs)			UNCDX	1D1DD	1.38	5.91	4.26								
		Additional 4-Wire 56Kbps Digital Grade Loop in same DS1 Interoffice Transport Combination - Zone 1		1	UNCDX	UDL56	30.99	94.21	45.09								
		Additional 4-Wire 56Kbps Digital Grade Loop in same DS1 Interoffice Transport Combination - Zone 2		2	UNCDX	UDL56	36.78	94.21	45.09								
		Additional 4-Wire 56Kbps Digital Grade Loop in same DS1 Interoffice Transport Combination - Zone 3		3	UNCDX	UDL56	38.92	94.21	45.09								

UNBUNDLED NETWORK ELEMENTS - Louisiana														Attachment: 2		Exhibit: A	
CATEGORY		RATE ELEMENTS	Interim	Zone	BCS	USOC	RATES ($)					Svc Order Submitted Elec per LSR	Svc Order Submitted Manually per LSR	Incremental Charge - Manual Svc Order vs. Electronic-1st	Incremental Charge - Manual Svc Order vs. Electronic-Add'l	Incremental Charge - Manual Svc Order vs. Electronic-Disc 1st	Incremental Charge - Manual Svc Order vs. Electronic-Disc Add'l
							Rec	Nonrecurring		Nonrecurring Disconnect		OSS Rates ($)					
								First	Add'l	First	Add'l	SOMEC	SOMAN	SOMAN	SOMAN	SOMAN	SOMAN
		Additional OCU-DP COCI (data) - in combination per month (2.4-64kbs)			UNCDX	1D1DD	1.38	5.91	4.26								
		Nonrecurring Currently Combined Network Elements Switch -As-Is Charge			UNC1X	UNCCC		5.43	5.43								
	EXTENDED 4-WIRE 64 KBPS EXTENDED DIGITAL LOOP WITH DEDICATED DS1 INTEROFFICE TRANSPORT																
		First 4-Wire 64Kbps Digital Grade Loop in Combination - Zone 1		1	UNCDX	UDL64	30.99	94.21	45.09								
		First 4-Wire 64Kbps Digital Grade Loop in Combination - Zone 2		2	UNCDX	UDL64	36.78	94.21	45.09								
		First 4-Wire 64Kbps Digital Grade Loop in Combination - Zone 3		3	UNCDX	UDL64	38.92	94.21	45.09								
		Interoffice Transport - Dedicated - DS1 combination - Per Mile Per Month			UNC1X	1L5XX	0.2652										
		interoffice Transport - Dedicated - DS1 combination - Facility Termination Per Month			UNC1X	U1TF1	70.47	143.58	103.88								
		1/0 Channel System in combination Per Month			UNC1X	MQ1	105.09	59.97	12.96								
		OCU-DP COCI (data) - in combination - per month (2.4-64kbs)			UNCDX	1D1DD	1.38	5.91	4.26								
		Additional 4-Wire 64Kbps Digital Grade Loop in same DS1 Interoffice Transport Combination - Zone 1		1	UNCDX	UDL64	30.99	94.21	45.09								
		Additional 4-Wire 64Kbps Digital Grade Loop in same DS1 Interoffice Transport Combination - Zone 2		2	UNCDX	UDL64	36.78	94.21	45.09								
		Additional 4-Wire 64Kbps Digital Grade Loop in same DS1 Interoffice Transport Combination - Zone 3		3	UNCDX	UDL64	38.92	94.21	45.09								
		Additional OCU-DP COCI (data) - in combination - per month (2.4-64kbs)			UNCDX	1D1DD	1.38	5.91	4.26								
		Nonrecurring Currently Combined Network Elements Switch -As-Is Charge			UNC1X	UNCCC		5.43	5.43								
	EXTENDED 4-WIRE DS1 DIGITAL EXTENDED LOOP WITH DEDICATED DS1 INTEROFFICE TRANSPORT																
		4-Wire DS1 Digital Loop in Combination - Zone 1		1	UNC1X	USLXX	85.70	169.22	100.89								
		4-Wire DS1 Digital Loop in Combination - Zone 2		2	UNC1X	USLXX	194.96	169.22	100.89								
		4-Wire DS1 Digital Loop in Combination - Zone 3		3	UNC1X	USLXX	491.94	169.22	100.89								
		Interoffice Transport - Dedicated - DS1 combination - Per Mile Per Month			UNC1X	1L5XX	0.2652										
		Interoffice Transport - Dedicated - DS1 combination - Facility Termination Per Month			UNC1X	U1TF1	70.47	143.58	103.88								
		Nonrecurring Currently Combined Network Elements Switch -As-Is Charge			UNC1X	UNCCC		5.43	5.43								
	EXTENDED 4-WIRE DS1 DIGITAL EXTENDED LOOP WITH DEDICATED DS3 INTEROFFICE TRANSPORT																
		First DS1Loop in Combination - Zone 1		1	UNC1X	USLXX	85.70	169.22	100.89								
		First DS1Loop in Combination - Zone 2		2	UNC1X	USLXX	194.96	169.22	100.89								
		First DS1Loop in Combination - Zone 3		3	UNC1X	USLXX	491.94	169.22	100.89								
		Interoffice Transport - Dedicated - DS3 combination - Per Mile Per Month			UNC3X	1L5XX	6.04										
		Interoffice Transport - Dedicated - DS3 - Facility Termination per month			UNC3X	U1TF3	850.45	296.68	121.16								
		3/1Channel System in combination per month			UNC3X	MQ3	201.48	107.05	91.25								
		DS1 COCI in combination per month			UNC1X	UC1D1	11.78	5.91	4.26								
		Additional DS1Loop in DS3 Interoffice Transport Combination - Zone 1		1	UNC1X	USLXX	85.70	169.22	100.89								
		Additional DS1Loop in DS3 Interoffice Transport Combination - Zone 2		2	UNC1X	USLXX	194.96	169.22	100.89								
		Additional DS1Loop in DS3 Interoffice Transport Combination - Zone 3		3	UNC1X	USLXX	491.94	169.22	100.89								
		Additoinal DS1 COCI in combination per month			UNC1X	UC1D1	11.78	5.91	4.26								
		Nonrecurring Currently Combined Network Elements Switch -As-Is Charge			UNC3X	UNCCC		5.43	5.43								
	EXTENDED 2-WIRE VOICE GRADE EXTENDED LOOP/ 2 WIRE VOICE GRADE INTEROFFICE TRANSPORT																
		2-WireVG Loop in combination - Zone 1		1	UNCVX	UEAL2	14.93	94.21	45.09								
		2-WireVG Loop in combination - Zone 2		2	UNCVX	UEAL2	25.35	94.21	45.09								

UNBUNDLED NETWORK ELEMENTS - Louisiana														Attachment: 2		Exhibit: A	
CATEGORY		RATE ELEMENTS	Interim	Zone	BCS	USOC	RATES ($)					Svc Order Submitted Elec per LSR	Svc Order Submitted Manually per LSR	Incremental Charge - Manual Svc Order vs. Electronic-1st	Incremental Charge - Manual Svc Order vs. Electronic-Add'l	Incremental Charge - Manual Svc Order vs. Electronic-Disc 1st	Incremental Charge - Manual Svc Order vs. Electronic-Disc Add'l
							Rec	Nonrecurring		Nonrecurring Disconnect		OSS Rates ($)					
								First	Add'l	First	Add'l	SOMEC	SOMAN	SOMAN	SOMAN	SOMAN	SOMAN
		2-WireVG Loop in combination - Zone 3		3	UNCVX	UEAL2	50.46	94.21	45.09								
		Interoffice Transport - 2-wire VG - Dedicated- Per Mile Per Month			UNCVX	1L5XX	0.013										
		Interoffice Transport - 2-wire VG - Dedicated - Facility Termination per month			UNCVX	U1TV2	22.60	72.60	41.75								
		Nonrecurring Currently Combined Network Elements Switch -As-Is Charge			UNCVX	UNCCC		5.43	5.43								
	EXTENDED 4-WIRE VOICE GRADE EXTENDED LOOP/ 4 WIRE VOICE GRADE INTEROFFICE TRANSPORT																
		4-WireVG Loop in combination - Zone 1		1	UNCVX	UEAL4	30.81	94.21	45.09								
		4-WireVG Loop in combination - Zone 2		2	UNCVX	UEAL4	38.32	94.21	45.09								
		4-WireVG Loop in combination - Zone 3		3	UNCVX	UEAL4	60.39	94.21	45.09								
		Interoffice Transport - 4-wire VG - Dedicated - Per Mile Per Month			UNCVX	1L5XX	0.013										
		Interoffice Transport - 4-wire VG - Dedicated - Facility Termination per month			UNCVX	U1TV4	19.81	72.60	41.75								
		Nonrecurring Currently Combined Network Elements Switch -As-Is Charge			UNCVX	UNCCC		5.43	5.43								
	EXTENDED DS3 DIGITAL EXTENDED LOOP WITH DEDICATED DS3 INTEROFFICE TRANSPORT																
		DS3 Local Loop in combination - per mile per month			UNC3X	1L5ND	10.04										
		DS3 Local Loop in combination - Facility Termination per month			UNC3X	UE3PX	362.34	188.45	125.51								
		Interoffice Transport - Dedicated - DS3 - Per Mile per month			UNC3X	1L5XX	6.04										
		Interoffice Transport - Dedicated - DS3 combination - Facility Termination per month			UNC3X	U1TF3	850.45	296.68	121.16								
		Nonrecurring Currently Combined Network Elements Switch -As-Is Charge			UNC3X	UNCCC		5.43	5.43								
	EXTENDED STS-1 DIGITAL EXTENDED LOOP WITH DEDICATED STS-1 INTEROFFICE TRANSPORT																
		STS-1 Local Lolp in combination - per mile per month			UNCSX	1L5ND	10.04										
		STS-1 Local Loop in combination - Facility Termination per month			UNCSX	UDLS1	374.56	188.45	125.51								
		Interoffice Transport - Dedicated - STS-1 combination - per mile per month			UNCSX	1L5XX	6.04										
		Interoffice Transport - Dedicated - STS-1 combination - Facility Termination per month			UNCSX	U1TFS	830.19	296.68	121.16								
		Nonrecurring Currently Combined Network Elements Switch -As-Is Charge			UNCSX	UNCCC		5.43	5.43								
	EXTENDED 2-WIRE ISDN EXTENDED LOOP WITH DS1 INTEROFFICE TRANSPORT																
		First 2-Wire ISDN Loop in Combination - Zone 1		1	UNCNX	U1L2X	22.09	94.21	45.09								
		First 2-Wire ISDN Loop in Combination - Zone 2		2	UNCNX	U1L2X	35.28	94.21	45.09								
		First 2-Wire ISDN Loop in Combination - Zone 3		3	UNCNX	U1L2X	65.18	94.21	45.09								
		Interoffice Transport - Dedicated - DS1 combination - per mile per month			UNC1X	1L5XX	0.2652										
		Interoffice Transport - Dedicated - DS1 combination - Facility Termination per month			UNC1X	U1TF1	70.47	143.58	103.88								
		1/0 Channel System in combination - per month			UNC1X	MQ1	105.09	59.97	12.96								
		2-wire ISDN COCI (BRITE) - in combination - per month			UNCNX	UC1CA	2.96	5.91	4.26								
		Additional 2-wire ISDN Loop in same DS1Interoffice Transport Combination - Zone 1		1	UNCNX	U1L2X	22.09	94.21	45.09								
		Additional 2-wire ISDN Loop in same DS1Interoffice Transport Combination - Zone 2		2	UNCNX	U1L2X	35.28	94.21	45.09								
		Additional 2-wire ISDN Loop in same DS1Interoffice Transport Combination - Zone 3		3	UNCNX	U1L2X	65.18	94.21	45.09								
		Additional 2-wire ISDN COCI (BRITE) - in combination- per month			UNCNX	UC1CA	2.96	5.91	4.26								
		Nonrecurring Currently Combined Network Elements Switch -As-Is Charge			UNC1X	UNCCC		5.43	5.43								
	EXTENDED 4-WIRE DS1 DIGITAL EXTENDED LOOP WITH DEDICATED STS-1 INTEROFFICE TRANSPORT																
		First DS1 Loop Combination - Zone 1		1	UNC1X	USLXX	85.70	169.22	100.89								
		First DS1 Loop Combination - Zone 2		2	UNC1X	USLXX	194.96	169.22	100.89								

UNBUNDLED NETWORK ELEMENTS - Louisiana														Attachment: 2		Exhibit: A	
CATEGORY		RATE ELEMENTS	Interim	Zone	BCS	USOC	RATES ($)					Svc Order Submitted Elec per LSR	Svc Order Submitted Manually per LSR	Incremental Charge - Manual Svc Order vs. Electronic-1st	Incremental Charge - Manual Svc Order vs. Electronic-Add'l	Incremental Charge - Manual Svc Order vs. Electronic-Disc 1st	Incremental Charge - Manual Svc Order vs. Electronic-Disc Add'l
							Rec	Nonrecurring		Nonrecurring Disconnect		OSS Rates ($)					
								First	Add'l	First	Add'l	SOMEC	SOMAN	SOMAN	SOMAN	SOMAN	SOMAN
		First DS1 Loop Combination - Zone 3		3	UNC1X	USLXX	491.94	169.22	100.89								
		Interoffice Transport - Dedicated - STS-1 combination - Per Mile Per Month			UNCSX	1L5XX	6.04										
		Interoffice Transport - Dedicated - STS-1 combination - Facility Termination per month			UNCSX	U1TFS	830.19	296.68	121.16								
		3/1 Channel System in combination per month			UNCSX	MQ3	201.48	107.05	91.25								
		DS1 COCI in combination per month			UNC1X	UC1D1	11.78	5.91	4.26								
		Additional DS1Loop in the same STS-1 Interoffice Transport Combination - Zone 1		1	UNC1X	USLXX	85.70	169.22	100.89								
		Additional DS1Loop in the same STS-1 Interoffice Transport Combination - Zone 2		2	UNC1X	USLXX	194.96	169.22	100.89								
		Additional DS1Loop in the same STS-1 Interoffice Transport Combination - Zone 3		3	UNC1X	USLXX	491.94	169.22	100.89								
		DS1 COCI in combination per month			UNC1X	UC1D1	11.78	5.91	4.26								
		Nonrecurring Currently Combined Network Elements Switch -As-Is Charge			UNCSX	UNCCC		5.43	5.43								
	EXTENDED 4-WIRE 56 KBPS DIGITAL EXTENDED LOOP WITH 56 KBPS INTEROFFICE TRANSPORT																
		4-wire 56 kbps Local Loop in combination - Zone 1		1	UNCDX	UDL56	30.99	94.21	45.09								
		4-wire 56 kbps Local Loop in combination - Zone 2		2	UNCDX	UDL56	36.78	94.21	45.09								
		4-wire 56 kbps Local Loop in combination - Zone 3		3	UNCDX	UDL56	38.92	94.21	45.09								
		Interoffice Transport - Dedicated - 4-wire 56 kbps combination - Per Mile per month			UNCDX	1L5XX	0.013										
		Interoffice Transport - Dedicated - 4-wire 56 kbps combination - Facility Termination per month			UNCDX	U1TD5	15.61	72.60	41.75								
		Nonrecurring Currently Combined Network Elements Switch -As-Is Charge			UNCDX	UNCCC		5.43	5.43								
	EXTENDED 4-WIRE 64 KBPS DIGITAL EXTENDED LOOP WITH 64 KBPS INTEROFFICE TRANSPORT																
		4-wire 64 kbps Lcoal Loop in Combination - Zone 1		1	UNCDX	UDL64	30.99	94.21	45.09								
		4-wire 64 kbps Lcoal Loop in Combination - Zone 2		2	UNCDX	UDL64	36.78	94.21	45.09								
		4-wire 64 kbps Lcoal Loop in Combination - Zone 3		3	UNCDX	UDL64	38.92	94.21	45.09								
		Interoffice Transport - Dedicated - 4-wire 64 kbps combination - Per Mile per month			UNCDX	1L5XX	0.013										
		Interoffice Transport - Dedicated - 4-wire 64 kbps combination - Facility Termination per month			UNCDX	U1TD6	15.61	72.60	41.75								
		Nonrecurring Currently Combined Network Elements Switch -As-Is Charge			UNCDX	UNCCC		5.43	5.43								
	EXTENDED 2-WIRE VOICE GRADE LOOP WITH DS1 INTEROFFICE TRANSPORT w/ 3/1 MUX																
		First 2-wire VG Loop (SL2) in Combination - Zone 1		1	UNCVX	UEAL2	14.93	94.21	45.09								
		First 2-wire VG Loop (SL2) in Combination - Zone 2		2	UNCVX	UEAL2	25.35	94.21	45.09								
		First 2-wire VG Loop (SL2) in Combination - Zone 3		3	UNCVX	UEAL2	50.46	94.21	45.09								
		First Interoffice Transport - Dedicated - DS1 combination - Per Mile			UNC1X	1L5XX	0.2652										
		First Interoffice Transport - Dedicated - DS1 combination - Facility Termination per month			UNC1X	U1TF1	70.47	143.58	103.88								
		Per each DS1 Channelization System Per Month			UNC1X	MQ1	105.09	59.97	12.96								
		Per each Voice Grade COCI - Per Month per month			UNCVX	1D1VG	0.6497	5.91	4.26								
		3/1 Channel System in combination per month			UNC3X	MQ3	201.48	107.05	91.25								
		Per each DS1 COCI in combination per month			UNC1X	UC1D1	11.78	5.91	4.26								
		Each Additional 2-Wire VG Loop(SL 2) in the same DS1 Interoffice Transport Combination - Zone 1		1	UNCVX	UEAL2	14.93	94.21	45.09								
		Each Additional 2-Wire VG Loop(SL2) in the same DS1 Interoffice Transport Combination - Zone 2		2	UNCVX	UEAL2	25.35	94.21	45.09								
		Each Additional 2-Wire VG Loop(SL2) in the same DS1 Interoffice Transport Combination - Zone 3		3	UNCVX	UEAL2	50.46	94.21	45.09								
		Each Additional Voice Grade COCI in combination - per month			UNCVX	1D1VG	0.6497	5.91	4.26								
		Each Additional DS1 Interoffice Channel per mile in same 3/1 Channel System per month			UNC1X	1L5XX	0.2652										
		Each Additional DS1 Interoffice Channel Facility Termination in same 3/1 Channel System per month			UNC1X	U1TF1	70.47	143.58	103.88								

UNBUNDLED NETWORK ELEMENTS - Louisiana														Attachment: 2		Exhibit: A	
CATEGORY		RATE ELEMENTS	Interim	Zone	BCS	USOC	RATES ($)					Svc Order Submitted Elec per LSR	Svc Order Submitted Manually per LSR	Incremental Charge - Manual Svc Order vs. Electronic-1st	Incremental Charge - Manual Svc Order vs. Electronic-Add'l	Incremental Charge - Manual Svc Order vs. Electronic-Disc 1st	Incremental Charge - Manual Svc Order vs. Electronic-Disc Add'l
							Rec	Nonrecurring		Nonrecurring Disconnect		OSS Rates ($)					
								First	Add'l	First	Add'l	SOMEC	SOMAN	SOMAN	SOMAN	SOMAN	SOMAN
		Each Additional DS1 COCI combination per month			UNC1X	UC1D1	11.78	5.91	4.26								
		Nonrecurring Currently Combined Network Elements Switch -As-Is Charge			UNC1X	UNCCC		5.43	5.43								
	EXTENDED 4-WIRE VOICE GRADE LOOP WITH DEDICATED DS1 INTEROFFICE TRANSPORT w/ 3/1 MUX																
		First 4-Wire Analog Voice Grade Local Loop in Combination - Zone 1		1	UNCVX	UEAL4	30.81	94.21	45.09								
		First 4-Wire Analog Voice Grade Local Loop in Combination - Zone 2		2	UNCVX	UEAL4	38.32	94.21	45.09								
		First 4-Wire Analog Voice Grade Local Loop in Combination - Zone 3		3	UNCVX	UEAL4	60.39	94.21	45.09								
		First Interoffice Transport - Dedicated - DS1 combination - Per Mile Per Month			UNC1X	1L5XX	0.2652										
		First Interoffice Transport - Dedicated - DS1 - Facility Termination Per Month			UNC1X	U1TF1	70.47	143.58	103.88								
		Per each 1/0 Channel System in combination Per Month			UNC1X	MQ1	105.09	59.97	12.96								
		Per each Voice Grade COCI in combination - per month			UNCVX	1D1VG	0.6497	5.91	4.26								
		3/1 Channel System in combination per month			UNC3X	MQ3	201.48	107.05	91.25								
		Per each DS1 COCI in combination per month			UNC1X	UC1D1	11.78	5.91	4.26								
		Additional 4-Wire Analog Voice Grade Loop in same DS1 Interoffice Transport Combination - Zone 1		1	UNCVX	UEAL4	30.81	94.21	45.09								
		Additional 4-Wire Analog Voice Grade Loop in same DS1 Interoffice Transport Combination - Zone 2		2	UNCVX	UEAL4	38.32	94.21	45.09								
		Additional 4-Wire Analog Voice Grade Loop in same DS1 Interoffice Transport Combination - Zone 3		3	UNCVX	UEAL4	60.39	94.21	45.09								
		Each Additional DS1 Interoffice Channel per mile in same 3/1 Channel System per month			UNC1X	1L5XX	0.2652										
		Each Additional DS1 Interoffice Channel Facility Termination in same 3/1 Channel System per month			UNC1X	U1TF1	70.47	143.58	103.88								
		Additional Voice Grade COCI - in combination - per month			UNCVX	1D1VG	0.6497	5.91	4.26								
		Nonrecurring Currently Combined Network Elements Switch -As-Is Charge			UNC1X	UNCCC		5.43	5.43								
	EXTENDED 4-WIRE 56 KBPS DIGITAL LOOP WITH DEDICATED DS1 INTEROFFICE TRANSPORT w/ 3/1 MUX																
		First 4-Wire 56Kbps Digital Grade Local Loop in Combination - Zone 1		1	UNCDX	UDL56	30.99	94.21	45.09								
		First 4-Wire 56Kbps Digital Grade Local Loop in Combination - Zone 2		2	UNCDX	UDL56	36.78	94.21	45.09								
		First 4-Wire 56Kbps Digital Grade Local Loop in Combination - Zone 3		3	UNCDX	UDL56	38.92	94.21	45.09								
		First Interoffice Transport - Dedicated - DS1 combination - Per Mile Per Month			UNC1X	1L5XX	0.2652										
		First Interoffice Transport - Dedicated - DS1 - combination Facility Termination Per Month			UNC1X	U1TF1	70.47	143.58	103.88								
		Per each 1/0 Channel System in combination Per Month			UNC1X	MQ1	105.09	59.97	12.96								
		Per each OCU-DP COCI (data) COCI per month (2.4-64kbs)			UNCDX	1D1DD	1.38	5.91	4.26								
		3/1 Channel System in combination per month			UNC3X	MQ3	201.48	107.05	91.25								
		Per each DS1 COCI in combination per month			UNC1X	UC1D1	11.78	5.91	4.26								
		Additional 4-Wire 56Kbps Digital Grade Loop in same DS1 Interoffice Transport Combination - Zone 1		1	UNCDX	UDL56	30.99	94.21	45.09								
		Additional 4-Wire 56Kbps Digital Grade Loop in same DS1 Interoffice Transport Combination - Zone 2		2	UNCDX	UDL56	36.78	94.21	45.09								
		Additional 4-Wire 56Kbps Digital Grade Loop in same DS1 Interoffice Transport Combination - Zone 3		3	UNCDX	UDL56	38.92	94.21	45.09								
		OCU-DP COCI (data) COCI in combination per month (2.4-64kbs)			UNCDX	1D1DD	1.38	5.91	4.26								
		Each Additional DS1 Interoffice Channel per mile in same 3/1 Channel System per month			UNC1X	1L5XX	0.2652										
		Each Additional DS1 Interoffice Channel Facility Termination in same 3/1 Channel System per month			UNC1X	U1TF1	70.47	143.58	103.88								

UNBUNDLED NETWORK ELEMENTS - Louisiana														Attachment: 2		Exhibit: A	
CATEGORY		RATE ELEMENTS	Interim	Zone	BCS	USOC	RATES ($)					Svc Order Submitted Elec per LSR	Svc Order Submitted Manually per LSR	Incremental Charge - Manual Svc Order vs. Electronic-1st	Incremental Charge - Manual Svc Order vs. Electronic-Add'l	Incremental Charge - Manual Svc Order vs. Electronic-Disc 1st	Incremental Charge - Manual Svc Order vs. Electronic-Disc Add'l
							Rec	Nonrecurring		Nonrecurring Disconnect		OSS Rates ($)					
								First	Add'l	First	Add'l	SOMEC	SOMAN	SOMAN	SOMAN	SOMAN	SOMAN
		Each Additional DS1 COCI in the same 3/1 channel system combination per month			UNC1X	UC1D1	11.78	5.91	4.26								
		Nonrecurring Currently Combined Network Elements Switch -As-Is Charge			UNC1X	UNCCC		5.43	5.43								
	EXTENDED 4-WIRE 64 KBPS DIGITAL LOOP WITH DEDICATED DS1 INTEROFFICE TRANSPORT w/ 3/1 MUX																
		First 4-Wire 64Kbps Digital Grade Loop in a DS1 Interoffice Transport Combination - Zone 1		1	UNCDX	UDL64	30.99	94.21	45.09								
		First 4-Wire 64Kbps Digital Grade Loop in a DS1 Interoffice Transport Combination - Zone 2		2	UNCDX	UDL64	36.78	94.21	45.09								
		First 4-Wire 64Kbps Digital Grade Loop in a DS1 Interoffice Transport Combination - Zone 3		3	UNCDX	UDL64	38.92	94.21	45.09								
		First Interoffice Transport - Dedicated - DS1 combination - Per Mile Per Month			UNC1X	1L5XX	0.2652										
		First Interoffice Transport - Dedicated - DS1 combination - Facility Termination Per Month			UNC1X	U1TF1	70.47	143.58	103.88								
		Per each Channel System 1/0 in combination Per Month			UNC1X	MQ1	105.09	59.97	12.96								
		Per each OCU-DP COCI (data) in combination - per month (2.4-64kbs)			UNCDX	1D1DD	1.38	5.91	4.26								
		3/1 Channel System in combination per month			UNC3X	MQ3	201.48	107.05	91.25								
		Per each DS1 COCI in combination per month			UNC1X	UC1D1	11.78	5.91	4.26								
		Additional 4-Wire 64Kbps Digital Grade Loop in same DS1 Interoffice Transport Combination - Zone 1		1	UNCDX	UDL64	30.99	94.21	45.09								
		Additional 4-Wire 64Kbps Digital Grade Loop in same DS1 Interoffice Transport Combination - Zone 2		2	UNCDX	UDL64	36.78	94.21	45.09								
		Additional 4-Wire 64Kbps Digital Grade Loop in same DS1 Interoffice Transport Combination - Zone 3		3	UNCDX	UDL64	38.92	94.21	45.09								
		Additional OCU-DP COCI (data) - DS1 to DS0 Channel System combination - per month (2.4-64kbs)			UNCDX	1D1DD	1.38	5.91	4.26								
		Each Additional DS1 Interoffice Channel per mile in same 3/1 Channel System per month			UNC1X	1L5XX	0.2652										
		Each Additional DS1 Interoffice Channel Facility Termination in same 3/1 Channel System per month			UNC1X	U1TF1	70.47	143.58	103.88								
		Each Additional DS1 COCI in the same 3/1 channel system combination per month			UNC1X	UC1D1	11.78	5.91	4.26								
		Nonrecurring Currently Combined Network Elements Switch -As-Is Charge			UNC1X	UNCCC		5.43	5.43								
	EXTENDED 2-WIRE ISDN LOOP WITH DS1 INTEROFFICE TRANSPORT w/ 3/1 MUX																
		First 2-Wire ISDN Loop in a DS1 Interoffice Combination Transport - Zone 1		1	UNCNX	U1L2X	22.09	94.21	45.09								
		First 2-Wire ISDN Loop in a DS1 Interoffice Combination Transport - Zone 2		2	UNCNX	U1L2X	35.28	94.21	45.09								
		First 2-Wire ISDN Loop in a DS1 Interoffice Combination Transport - Zone 3		3	UNCNX	U1L2X	65.18	94.21	45.09								
		First Interoffice Transport - Dedicated - DS1 combination - Per Mile per month			UNC1X	1L5XX	0.2652										
		First Interoffice Transport - Dedicated - DS1 combination - Facility Termination per month			UNC1X	U1TF1	70.47	143.58	103.88								
		Per each Channel System 1/0 in combination - per month			UNC1X	MQ1	105.09	59.97	12.96								
		Per each 2-wire ISDN COCI (BRITE) in combination - per month			UNCNX	UC1CA	2.96	5.91	4.26								
		3/1 Channel System in combination per month			UNC3X	MQ3	201.48	107.05	91.25								
		Per each DS1 COCI in combination per month			UNC1X	UC1D1	11.78	5.91	4.26								
		Additional 2-wire ISDN Loop in same DS1Interoffice Transport Combination - Zone 1		1	UNCNX	U1L2X	22.09	94.21	45.09								
		Additional 2-wire ISDN Loop in same DS1Interoffice Transport Combination - Zone 2		2	UNCNX	U1L2X	35.28	94.21	45.09								
		Additional 2-wire ISDN Loop in same DS1Interoffice Transport Combination - Zone 3		3	UNCNX	U1L2X	65.18	94.21	45.09								

UNBUNDLED NETWORK ELEMENTS - Louisiana														Attachment: 2		Exhibit: A	
CATEGORY		RATE ELEMENTS	Interim	Zone	BCS	USOC	RATES ($)					Svc Order Submitted Elec per LSR	Svc Order Submitted Manually per LSR	Incremental Charge - Manual Svc Order vs. Electronic-1st	Incremental Charge - Manual Svc Order vs. Electronic-Add'l	Incremental Charge - Manual Svc Order vs. Electronic-Disc 1st	Incremental Charge - Manual Svc Order vs. Electronic-Disc Add'l
							Rec	Nonrecurring		Nonrecurring Disconnect		OSS Rates ($)					
								First	Add'l	First	Add'l	SOMEC	SOMAN	SOMAN	SOMAN	SOMAN	SOMAN
		Additional 2-wire ISDN COCI (BRITE) in same 1/0 channel system combination- per month			UNCNX	UC1CA	2.96	5.91	4.26								
		Each Additional DS1 Interoffice Channel per mile in same 3/1 Channel System per month			UNC1X	1L5XX	0.2652										
		Each Additional DS1 Interoffice Channel Facility Termination in same 3/1 Channel System per month			UNC1X	U1TF1	70.47	143.58	103.88								
		Each Additional DS1 COCI in the same 3/1 channel system combination per month			UNC1X	UC1D1	11.78	5.91	4.26								
		Nonrecurring Currently Combined Network Elements Switch -As-Is Charge			UNC1X	UNCCC		5.43	5.43								
	EXTENDED 4-WIRE DS1 LOOP WITH DEDICATED DS1 INTEROFFICE TRANSPORT w/ 3/1 MUX																
		First 4-wire DS1 Digital Lcoal Loop in Combination - Zone 1		1	UNC1X	USLXX	85.70	169.22	100.89								
		First 4-wire DS1 Digital Lcoal Loop in Combination - Zone 2		2	UNC1X	USLXX	194.96	169.22	100.89								
		First 4-wire DS1 Digital Lcoal Loop in Combination - Zone 3		3	UNC1X	USLXX	491.94	169.22	100.89								
		First Interoffice Transport - Dedicated - DS1 combination - Per Mile Per Month			UNC1X	1L5XX	0.2652										
		First Interoffice Transport - Dedicated - DS1 combination - Facility Termination Per Month			UNC1X	U1TF1	70.47	143.58	103.88								
		3/1 Channel System in combination per month			UNC3X	MQ3	201.48	107.05	91.25								
		Per each DS1 COCI combination per month			UNC1X	UC1D1	11.78	5.91	4.26								
		Each Additional DS1 Interoffice Channel per mile in same 3/1 Channel System per month			UNC1X	1L5XX	0.2652										
		Each Additional DS1 Interoffice Channel Facility Termination in same 3/1 Channel System per month			UNC1X	U1TF1	70.47	143.58	103.88								
		Each Additional DS1 COCI in the same 3/1 channel system combination per month			UNC1X	UC1D1	11.78	5.91	4.26								
		Additional 4-Wire DS1 Digital Local Loop in Combination - Zone 1		1	UNC1X	USLXX	85.70	169.22	100.89								
		Additional 4-Wire DS1 Digital Local Loop in Combination - Zone 2		2	UNC1X	USLXX	194.96	169.22	100.89								
		Additional 4-Wire DS1 Digital Local Loop in Combination - Zone 3		3	UNC1X	USLXX	491.94	169.22	100.89								
		Nonrecurring Currently Combined Network Elements Switch -As-Is Charge			UNC1X	UNCCC		5.43	5.43								
	EXTENDED 4-WIRE 56 KBPS DIGITAL EXTENDED LOOP WITH DS0 INTEROFFICE TRANSPORT																
		First 4-wire 56 kbps Local Loop in combination - Zone 1		1	UNCDX	UDL56	30.99	94.21	45.09								
		First 4-wire 56 kbps Local Loop in combination - Zone 2		2	UNCDX	UDL56	36.78	94.21	45.09								
		First 4-wire 56 kbps Local Loop in combination - Zone 3		3	UNCDX	UDL56	38.92	94.21	45.09								
		First 4-wiree 56 kbps Interoffice Transport - Dedicated - Per Mile per month			UNCDX	1L5XX	0.013										
		First 4-wire 56 kbps Interoffice Transport - Dedicated - Facility Termination per month			UNCDX	U1TD5	15.61	72.60	41.75								
		Nonrecurring Currently Combined Network Elements Switch -As-Is Charge			UNCDX	UNCCC		5.43	5.43								
	EXTENDED 4-WIRE 64 KBPS DIGITAL EXTENDED LOOP WITH DS0 INTEROFFICE TRANSPORT																
		First 4-wire 64 kbps Local Loop in combination - Zone 1		1	UNCDX	UDL64	30.99	94.21	45.09								
		First 4-wire 64 kbps Local Loop in combination - Zone 2		2	UNCDX	UDL64	36.78	94.21	45.09								
		First 4-wire 64 kbps Local Loop in combination - Zone 3		3	UNCDX	UDL64	38.92	94.21	45.09								
		First l4-wire 65 kbps Interoffice Transport - Dedicated - Per Mile per month			UNCDX	1L5XX	0.013										
		First 4-wire 64 kbps Interoffice Transport - Dedicated - Facility Termination per month			UNCDX	U1TD6	15.61	72.60	41.75								
		Nonrecurring Currently Combined Network Elements Switch -As-Is Charge			UNCDX	UNCCC		5.43	5.43								
ADDITIONAL NETWORK ELEMENTS																	
	When used as a part of a currently combined facility, the non-recurrng charges do not apply, but a Switch As Is charge does apply.																
	When used as ordinarily combined network elements in All States, the non-recurring charges apply and the Switch As Is Charge does not.																
		Nonrecurring Currently Combined Network Elements Switch -As-Is Charge - 2 wire/4-Wire VG			UNCVX	UNCCC		5.43	5.43								

UNBUNDLED NETWORK ELEMENTS - Louisiana														Attachment: 2		Exhibit: A	
CATEGORY		RATE ELEMENTS	Interim	Zone	BCS	USOC	RATES ($)					Svc Order Submitted Elec per LSR	Svc Order Submitted Manually per LSR	Incremental Charge - Manual Svc Order vs. Electronic-1st	Incremental Charge - Manual Svc Order vs. Electronic-Add'l	Incremental Charge - Manual Svc Order vs. Electronic-Disc 1st	Incremental Charge - Manual Svc Order vs. Electronic-Disc Add'l
							Rec	Nonrecurring		Nonrecurring Disconnect		OSS Rates ($)					
								First	Add'l	First	Add'l	SOMEC	SOMAN	SOMAN	SOMAN	SOMAN	SOMAN
		Nonrecurring Currently Combined Network Elements Switch -As-Is Charge - 56/64 kbps			UNCDX	UNCCC		5.43	5.43								
	MULTIPLEXERS																
		DS1 to DS0 Channel System per month			UNC1X	MQ1	105.09	59.97	12.96								
		OCU-DP COCI (data) - DS1 to DS0 Channel System - per month (2.4-64kbs) used for a Local Loop			UDL	1D1DD	1.38	6.39	4.58								
		OCU-DP COCI (data) - DS1 to DS0 Channel System - per month (2.4-64kbs) used for connection to a channelized DS1 Local Channel in the same SWC as collocation			U1TUD	1D1DD	1.38	6.39	4.58								
		2-wire ISDN COCI (BRITE) - DS1 to DS0 Channel Systsem - per month for a Local Loop			UDN	UC1CA	2.96	6.39	4.58								
		2-wire ISDN COCI (BRITE) - DS1 to DS0 Channel Systsem - per month used for connection to a channelized DS1 Local Channel in the same SWC as collocation			U1TUB	UC1CA	2.96	6.39	4.58								
		Voice Grade COCI - DS1 to DS0 Channel System - per month used for a Local Loop			UEA	1D1VG	0.6497	6.39	4.58								
		Voice Grade COCI - DS1 to DS0 Channel System - per month used for connection to a channelized DS1 Local Channel in the same SWC as collocation			U1TUC	1D1VG	0.6497	6.39	4.58								
		DS3 to DS1 Channel System per month			UNC3X	MQ3	201.48	107.05	91.25								
		STS-1 to DS1 Channel System per month			UNCSX	MQ3	201.48	107.05	91.25								
		DS1 COCI used with Loop per month			USL	UC1D1	11.78	6.39	4.58								
		DS1 COCI (used for connection to a channelized DS1 Local Channel in the same SWC as collocation) per month			U1TUA	UC1D1	11.78	6.39	4.58								
		DS1 COCI used with Interoffice Channel per month			U1TD1	UC1D1	11.78	6.39	4.58								
		DS3 Interface Unit (DS1 COCI) used with Local Channel per month			ULDD1	UC1D1	11.78	6.39	4.58								

UNBUNDLED NETWORK ELEMENTS - Mississippi														Attachment: 2		Exhibit: A	
CATEGORY		RATE ELEMENTS	Interim	Zone	BCS	USOC	RATES ($)					Svc Order Submitted Elec per LSR	Svc Order Submitted Manually per LSR	Incremental Charge - Manual Svc Order vs. Electronic-1st	Incremental Charge - Manual Svc Order vs. Electronic-Add'l	Incremental Charge - Manual Svc Order vs. Electronic-Disc 1st	Incremental Charge - Manual Svc Order vs. Electronic-Disc Add'l
							Rec	Nonrecurring		Nonrecurring Disconnect		OSS Rates ($)					
								First	Add'l	First	Add'l	SOMEC	SOMAN	SOMAN	SOMAN	SOMAN	SOMAN
	The "Zone" shown in the sections for stand-alone loops or loops as part of a combination refers to Geographically Deaveraged UNE Zones. To view Geographically Deaveraged UNE Zone Designations by Central Office, refer to internet Website: http://www.interconnection.bellsouth.com/become_a_clec/html/interconnection.htm																
OPERATIONAL SUPPORT SYSTEMS (OSS) - "REGIONAL RATES"																	
	NOTE: (1) CLEC should contact its contract negotiator if it prefers the "state specific" OSS charges as ordered by the State Commissions. The OSS charges currently contained in this rate exhibit are the BellSouth "regional" service ordering charges. CLEC may elect either the state specific Commission ordered rates for the service ordering charges, or CLEC may elect the regional service ordering charge, however, CLEC can not obtain a mixture of the two regardless if CLEC has a interconnection contract established in each of the 9 states.																
	NOTE: (2) Any element that can be ordered electronically will be billed according to the SOMEC rate listed in this category. Please refer to BellSouth's Local Ordering Handbook (LOH) to determine if a product can be ordered electronically. For those elements that cannot be ordered electronically at present per the LOH, the listed SOMEC rate in this category reflects the charge that would be billed to a CLEC once electronic ordering capabilities come on-line for that element. Otherwise, the manual ordering charge, SOMAN, will be applied to a CLECs bill when it submits an LSR to BellSouth.																
		OSS - Electronic Service Order Charge, Per Local Service Request (LSR) - UNE Only				SOMEC		3.50	0.00	3.50	0.00						
		OSS - Manual Service Order Charge, Per Local Service Request (LSR) - UNE Only				SOMAN		15.75	0.00	1.97	0.00						
UNE SERVICE DATE ADVANCEMENT CHARGE																	
	NOTE: The Expedite charge will be maintained commensurate with BellSouth's FCC No.1 Tariff, Section 5 as applicable.																
		UNE Expedite Charge per Circuit or Line Assignable USOC, per Day			UAL, UEANL, UCL, UEF, UDF, UEQ, UDL, UENTW, UDN, UEA, UHL, ULC, USL, U1T12, U1T48, U1TD1, U1TD3, U1TDX, U1TO3, U1TS1, U1TVX, UC1BC, UC1BL, UC1CC, UC1CL, UC1DC, UC1DL, UC1EC, UC1EL, UC1FC, UC1FL, UC1GC, UC1GL, UC1HC, UC1HL, UDL12, UDL48, UDLO3, UDLSX, UE3, ULD12, ULD48, ULDD1, ULDD3, ULDDX, ULDO3, ULDS1, ULDVX, UNC1X, UNC3X, UNCDX, UNCNX, UNCSX, UNCVX, UNLD1, UNLD3, UXTD1, UXTD3, UXTS1, U1TUC, U1TUD, U1TUB, U1TUA	SDASP		200.00									
UNBUNDLED EXCHANGE ACCESS LOOP																	
	2-WIRE ANALOG VOICE GRADE LOOP																
		2-Wire Analog Voice Grade Loop - Service Level 1- Zone 1		1	UEANL	UEAL2	12.03	37.92	17.55	23.48	5.25						
		2-Wire Analog Voice Grade Loop - Service Level 1- Zone 2		2	UEANL	UEAL2	16.87	37.92	17.55	23.48	5.25						
		2-Wire Analog Voice Grade Loop - Service Level 1- Zone 3		3	UEANL	UEAL2	25.68	37.92	17.55	23.48	5.25						
		2-Wire Analog Voice Grade Loop - Service Level 1-Zone 4		4	UEANL	UEAL2	43.85	37.92	17.55	23.48	5.25						
		2-Wire Analog Voice Grade Loop - Service Level 1- Zone 1		1	UEANL	UEASL	12.03	37.92	17.55	23.48	5.25						
		2-Wire Analog Voice Grade Loop - Service Level 1- Zone 2		2	UEANL	UEASL	16.87	37.92	17.55	23.48	5.25						
		2-Wire Analog Voice Grade Loop - Service Level 1- Zone 3		3	UEANL	UEASL	25.68	37.92	17.55	23.48	5.25						
		2-Wire Analog Voice Grade Loop - Service Level 1-Zone 4		4	UEANL	UEASL	43.85	37.92	17.55	23.48	5.25						
		Unbundled Miscellaneous Rate Element, Tag Loop at End User Premise			UEANL	URETL		8.33	0.83								
		Loop Testing - Basic 1st Half Hour			UEANL	URET1		34.36	34.36								

UNBUNDLED NETWORK ELEMENTS - Mississippi													Attachment: 2		Exhibit: A	
CATEGORY	RATE ELEMENTS	Interim	Zone	BCS	USOC	RATES ($)					Svc Order Submitted Elec per LSR	Svc Order Submitted Manually per LSR	Incremental Charge - Manual Svc Order vs. Electronic-1st	Incremental Charge - Manual Svc Order vs. Electronic-Add'l	Incremental Charge - Manual Svc Order vs. Electronic-Disc 1st	Incremental Charge - Manual Svc Order vs. Electronic-Disc Add'l
						Rec	Nonrecurring		Nonrecurring Disconnect		OSS Rates ($)					
							First	Add'l	First	Add'l	SOMEC	SOMAN	SOMAN	SOMAN	SOMAN	SOMAN
	Loop Testing - Basic Additional Half Hour			UEANL	URETA		19.97	19.97								
	CLEC to CLEC Conversion Charge Without Outside Dispatch			UEANL	UREWO		15.75	8.92								
	Unbundled Voice Loop, Non-Design Voice Loop, billing for BST providing make-up (Engineering Information - E.I.)			UEANL	UEANM		13.51	13.51								
	Manual Order Coordination for UVL-SL1s (per loop)			UEANL	UEAMC		8.20	8.20								
	Order Coordination for Specified Conversion Time for UVL-SL1 (per LSR)			UEANL	OCOSL		18.19	18.19								
2-WIRE Unbundled COPPER LOOP																
	2-Wire Unbundled Copper Loop - Non-Designed Zone 1		1	UEQ	UEQ2X	11.01	36.53	16.16	22.66	4.42						
	2 Wire Unbundled Copper Loop - Non-Designed - Zone 2		2	UEQ	UEQ2X	11.51	36.53	16.16	22.66	4.42						
	2 Wire Unbundled Copper Loop - Non-Designed - Zone 3		3	UEQ	UEQ2X	11.57	36.53	16.16	22.66	4.42						
	2 Wire Unbundled Copper Loop - Non-Designed - Zone 4		4	UEQ	UEQ2X	13.10	36.53	16.16	22.66	4.42						
	Unbundled Miscellaneous Rate Element, Tag Loop at End User Premise			UEQ	URETL		8.33	0.83								
	Manual Order Coordination 2 Wire Unbundled Copper Loop - Non-Designed (per loop)			UEQ	USBMC		8.20	8.20								
	Unbundled Copper Loop, Non-Design Copper Loop, billing for BST providing make-up (Engineering Information - E.I.)			UEQ	UEQMU		13.51	13.51								
	Loop Testing - Basic 1st Half Hour			UEQ	URET1		34.36	34.36								
	Loop Testing - Basic Additional Half Hour			UEQ	URETA		19.97	19.97								
	CLEC to CLEC Conversion Charge Without Outside Dispatch			UEQ	UREWO		14.24	7.42								
UNBUNDLED EXCHANGE ACCESS LOOP																
2-WIRE ANALOG VOICE GRADE LOOP																
	2-Wire Analog Voice Grade Loop - Service Level 2 w/Loop or Ground Start Signaling - Zone 1		1	UEA	UEAL2	13.89	105.96	68.28	52.82	10.37						
	2-Wire Analog Voice Grade Loop - Service Level 2 w/Loop or Ground Start Signaling - Zone 2		2	UEA	UEAL2	18.75	105.96	68.28	52.82	10.37						
	2-Wire Analog Voice Grade Loop - Service Level 2 w/Loop or Ground Start Signaling - Zone 3		3	UEA	UEAL2	27.55	105.96	68.28	52.82	10.37						
	2-Wire Analog Voice Grade Loop - Service Level 2 w/Loop or Ground Start Signaling - Zone 4		4	UEA	UEAL2	45.72	105.96	68.28	52.82	10.37						
	Order Coordination for Specified Conversion Time (per LSR)			UEA	OCOSL		18.19									
	2-Wire Analog Voice Grade Loop - Service Level 2 w/Reverse Battery Signaling - Zone 1		1	UEA	UEAR2	13.89	105.96	68.28	52.82	10.37						
	2-Wire Analog Voice Grade Loop - Service Level 2 w/Reverse Battery Signaling - Zone 2		2	UEA	UEAR2	18.75	105.96	68.28	52.82	10.37						
	2-Wire Analog Voice Grade Loop - Service Level 2 w/Reverse Battery Signaling - Zone 3		3	UEA	UEAR2	27.55	105.96	68.28	52.82	10.37						
	2-Wire Analog Voice Grade Loop - Service Level 2 w/Reverse Battery Signaling - Zone 4		4	UEA	UEAR2	45.72	105.96	68.28	52.82	10.37						
	Order Coordination for Specified Conversion Time (per LSR)			UEA	OCOSL		18.19									
	CLEC to CLEC Conversion Charge without outside dispatch			UEA	UREWO		87.56	36.29								
	Loop Tagging - Service Level 2 (SL2)			UEA	URETL		11.19	1.10								
4-WIRE ANALOG VOICE GRADE LOOP																
	4-Wire Analog Voice Grade Loop - Zone 1		1	UEA	UEAL4	27.47	132.27	94.59	60.68	14.64						
	4-Wire Analog Voice Grade Loop - Zone 2		2	UEA	UEAL4	38.26	132.27	94.59	60.68	14.64						
	4-Wire Analog Voice Grade Loop - Zone 3		3	UEA	UEAL4	50.03	132.27	94.59	60.68	14.64						
	4-Wire Analog Voice Grade Loop - Zone 4		4	UEA	UEAL4	50.03	132.27	94.59	60.68	14.64						
	Order Coordination for Specified Conversion Time (per LSR)			UEA	OCOSL		18.19									
	CLEC to CLEC Conversion Charge without outside dispatch			UEA	UREWO		87.56	36.29								
2-WIRE ISDN DIGITAL GRADE LOOP																
	2-Wire ISDN Digital Grade Loop - Zone 1		1	UDN	U1L2X	21.01	117.61	79.92	52.82	10.37						
	2-Wire ISDN Digital Grade Loop - Zone 2		2	UDN	U1L2X	27.59	117.61	79.92	52.82	10.37						
	2-Wire ISDN Digital Grade Loop - Zone 3		3	UDN	U1L2X	37.34	117.61	79.92	52.82	10.37						
	2-Wire ISDN Digital Grade Loop - Zone 4		4	UDN	U1L2X	59.18	117.61	79.92	52.82	10.37						
	Order Coordination For Specified Conversion Time (per LSR)			UDN	OCOSL		18.19									
	CLEC to CLEC Conversion Charge without outside dispatch			UDN	UREWO		91.46	44.07								
2-WIRE ASYMMETRICAL DIGITAL SUBSCRIBER LINE (ADSL) COMPATIBLE LOOP																

UNBUNDLED NETWORK ELEMENTS - Mississippi														Attachment: 2		Exhibit: A	
CATEGORY		RATE ELEMENTS	Interim	Zone	BCS	USOC	RATES ($)					Svc Order Submitted Elec per LSR	Svc Order Submitted Manually per LSR	Incremental Charge - Manual Svc Order vs. Electronic-1st	Incremental Charge - Manual Svc Order vs. Electronic-Add'l	Incremental Charge - Manual Svc Order vs. Electronic-Disc 1st	Incremental Charge - Manual Svc Order vs. Electronic-Disc Add'l
							Rec	Nonrecurring		Nonrecurring Disconnect		OSS Rates ($)					
								First	Add'l	First	Add'l	SOMEC	SOMAN	SOMAN	SOMAN	SOMAN	SOMAN
		2 Wire Unbundled ADSL Loop including manual service inquiry & facility reservation - Zone 1		1	UAL	UAL2X	11.11	121.27	70.81	50.38	7.93						
		2 Wire Unbundled ADSL Loop including manual service inquiry & facility reservation - Zone 2		2	UAL	UAL2X	11.47	121.27	70.81	50.38	7.93						
		2 Wire Unbundled ADSL Loop including manual service inquiry & facility reservation - Zone 3		3	UAL	UAL2X	11.74	121.27	70.81	50.38	7.93						
		2 Wire Unbundled ADSL Loop including manual service inquiry & facility reservation - Zone 4		4	UAL	UAL2X	12.69	121.27	70.81	50.38	7.93						
		Order Coordination for Specified Conversion Time (per LSR)			UAL	OCOSL		18.19									
		2 Wire Unbundled ADSL Loop without manual service inquiry & facility reservaton - Zone 1		1	UAL	UAL2W	11.11	96.15	58.03	50.38	7.93						
		2 Wire Unbundled ADSL Loop without manual service inquiry & facility reservaton - Zone 2		2	UAL	UAL2W	11.47	96.15	58.03	50.38	7.93						
		2 Wire Unbundled ADSL Loop without manual service inquiry & facility reservaton - Zone 3		3	UAL	UAL2W	11.74	96.15	58.03	50.38	7.93						
		2 Wire Unbundled ADSL Loop without manual service inquiry & facility reservaton - Zone 4		4	UAL	UAL2W	12.69	96.15	58.03	50.38	7.93						
		Order Coordination for Specified Conversion Time (per LSR)			UAL	OCOSL		18.19									
		CLEC to CLEC Conversion Charge without outside dispatch			UAL	UREWO		86.04	40.33								
	2-WIRE HIGH BIT RATE DIGITAL SUBSCRIBER LINE (HDSL) COMPATIBLE LOOP																
		2 Wire Unbundled HDSL Loop including manual service inquiry & facility reservation - Zone 1		1	UHL	UHL2X	8.75	129.98	79.52	50.38	7.93						
		2 Wire Unbundled HDSL Loop including manual service inquiry & facility reservation - Zone 2		2	UHL	UHL2X	9.22	129.98	79.52	50.38	7.93						
		2 Wire Unbundled HDSL Loop including manual service inquiry & facility reservation - Zone 3		3	UHL	UHL2X	9.87	129.98	79.52	50.38	7.93						
		2 Wire Unbundled HDSL Loop including manual service inquiry & facility reservation - Zone 4		4	UHL	UHL2X	10.46	129.98	79.52	50.38	7.93						
		Order Coordination for Specified Conversion Time (per LSR)			UHL	OCOSL		18.19									
		2 Wire Unbundled HDSL Loop without manual service inquiry and facility reservation - Zone 1		1	UHL	UHL2W	8.75	104.86	66.74	50.38	7.93						
		2 Wire Unbundled HDSL Loop without manual service inquiry and facility reservation - Zone 2		2	UHL	UHL2W	9.22	104.86	66.74	50.38	7.93						
		2 Wire Unbundled HDSL Loop without manual service inquiry and facility reservation - Zone 3		3	UHL	UHL2W	9.87	104.86	66.74	50.38	7.93						
		2 Wire Unbundled HDSL Loop without manual service inquiry and facility reservation - Zone 4		4	UHL	UHL2W	10.46	104.86	66.74	50.38	7.93						
		Order Coordination for Specified Conversion Time (per LSR)			UHL	OCOSL		18.19									
		CLEC to CLEC Conversion Charge without outside dispatch			UHL	UREWO		85.98	40.33								
	4-WIRE HIGH BIT RATE DIGITAL SUBSCRIBER LINE (HDSL) COMPATIBLE LOOP																
		4 Wire Unbundled HDSL Loop including manual service inquiry and facility reservation - Zone 1		1	UHL	UHL4X	13.78	158.74	108.28	56.72	10.68						
		4-Wire Unbundled HDSL Loop including manual service inquiry and facility reservation - Zone 2		2	UHL	UHL4X	13.43	158.74	108.28	56.72	10.68						
		4-Wire Unbundled HDSL Loop including manual service inquiry and facility reservation - Zone 3		3	UHL	UHL4X	15.59	158.74	108.28	56.72	10.68						
		4-Wire Unbundled HDSL Loop including manual service inquiry and facility reservation - Zone 4		4	UHL	UHL4X	14.46	158.74	108.28	56.72	10.68						
		Order Coordination for Specified Conversion Time (per LSR)			UHL	OCOSL		18.19									
		4-Wire Unbundled HDSL Loop without manual service inquiry and facility reservation - Zone 1		1	UHL	UHL4W	13.78	133.62	95.50	56.72	10.68						
		4-Wire Unbundled HDSL Loop without manual service inquiry and facility reservation - Zone 2		2	UHL	UHL4W	13.43	133.62	95.50	56.72	10.68						
		4-Wire Unbundled HDSL Loop without manual service inquiry and facility reservation - Zone 3		3	UHL	UHL4W	15.59	133.62	95.50	56.72	10.68						
		4-Wire Unbundled HDSL Loop without manual service inquiry and facility reservation - Zone 4		4	UHL	UHL4W	14.46	133.62	95.50	56.72	10.68						
		Order Coordination for Specified Conversion Time (per LSR)			UHL	OCOSL		18.19									
		CLEC to CLEC Conversion Charge without outside dispatch			UHL	UREWO		85.98	40.33								

UNBUNDLED NETWORK ELEMENTS - Mississippi														Attachment: 2		Exhibit: A	
CATEGORY		RATE ELEMENTS	Interim	Zone	BCS	USOC	RATES ($)					Svc Order Submitted Elec per LSR	Svc Order Submitted Manually per LSR	Incremental Charge - Manual Svc Order vs. Electronic-1st	Incremental Charge - Manual Svc Order vs. Electronic-Add'l	Incremental Charge - Manual Svc Order vs. Electronic-Disc 1st	Incremental Charge - Manual Svc Order vs. Electronic-Disc Add'l
							Rec	Nonrecurring		Nonrecurring Disconnect		OSS Rates ($)					
								First	Add'l	First	Add'l	SOMEC	SOMAN	SOMAN	SOMAN	SOMAN	SOMAN
	4-WIRE DS1 DIGITAL LOOP																
		4-Wire DS1 Digital Loop - Zone 1		1	USL, NTCD1	USLXX	79.08	253.93	158.45	46.10	12.07						
		4-Wire DS1 Digital Loop - Zone 2		2	USL, NTCD1	USLXX	129.38	253.93	158.45	46.10	12.07						
		4-Wire DS1 Digital Loop - Zone 3		3	USL, NTCD1	USLXX	206.74	253.93	158.45	46.10	12.07						
		4-Wire DS1 Digital Loop - Zone 4		4	USL, NTCD1	USLXX	458.46	253.93	158.45	46.10	12.07						
		Order Coordination for Specified Conversion Time (per LSR)			USL, NTCD1	OCOSL		18.19									
		CLEC to CLEC Conversion Charge without outside dispatch			USL, NTCD1	UREWO		100.90	42.96								
	4-WIRE 19.2, 56 OR 64 KBPS DIGITAL GRADE LOOP																
		4 Wire Unbundled Digital 19.2 Kbps		1	UDL	UDL19	27.44	126.53	88.85	60.68	14.64						
		4 Wire Unbundled Digital 19.2 Kbps		2	UDL	UDL19	34.55	126.53	88.85	60.68	14.64						
		4 Wire Unbundled Digital 19.2 Kbps		3	UDL	UDL19	40.76	126.53	88.85	60.68	14.64						
		4 Wire Unbundled Digital 19.2 Kbps		4	UDL	UDL19	32.25	126.53	88.85	60.68	14.64						
		4 Wire Unbundled Digital Loop 56 Kbps - Zone 1		1	UDL	UDL56	27.44	126.53	88.85	60.68	14.64						
		4 Wire Unbundled Digital Loop 56 Kbps - Zone 2		2	UDL	UDL56	34.55	126.53	88.85	60.68	14.64						
		4 Wire Unbundled Digital Loop 56 Kbps - Zone 3		3	UDL	UDL56	40.76	126.53	88.85	60.68	14.64						
		4 Wire Unbundled Digital Loop 56 Kbps - Zone 4		4	UDL	UDL56	32.25	126.53	88.85	60.68	14.64						
		Order Coordination for Specified Conversion Time (per LSR)			UDL	OCOSL		18.19									
		4 Wire Unbundled Digital Loop 64 Kbps - Zone 1		1	UDL	UDL64	27.44	126.53	88.85	60.68	14.64						
		4 Wire Unbundled Digital Loop 64 Kbps - Zone 2		2	UDL	UDL64	34.55	126.53	88.85	60.68	14.64						
		4 Wire Unbundled Digital Loop 64 Kbps - Zone 3		3	UDL	UDL64	40.76	126.53	88.85	60.68	14.64						
		4 Wire Unbundled Digital Loop 64 Kbps - Zone 4		4	UDL	UDL64	32.25	126.53	88.85	60.68	14.64						
		Order Coordination for Specified Conversion Time (per LSR)			UDL	OCOSL		18.19									
		CLEC to CLEC Conversion Charge without outside dispatch			UDL	UREWO		101.94	49.66								
	2-WIRE Unbundled COPPER LOOP																
		2-Wire Unbundled Copper Loop-Designed including manual service inquiry & facility reservation - Zone 1		1	UCL	UCLPB	11.11	120.34	69.87	50.38	7.93						
		2-Wire Unbundled Copper Loop-Designed including manual service inquiry & facility reservation - Zone 2		2	UCL	UCLPB	11.47	120.34	69.87	50.38	7.93						
		2 Wire Unbundled Copper Loop-Designed including manual service inquiry & facility reservation - Zone 3		3	UCL	UCLPB	11.74	120.34	69.87	50.38	7.93						
		2 Wire Unbundled Copper Loop-Designed including manual service inquiry & facility reservation - Zone 4		4	UCL	UCLPB	12.69	120.34	69.87	50.38	7.93						
		Order Coordination for Unbundled Copper Loops (per loop)			UCL	UCLMC		8.20	8.20								
		2-Wire Unbundled Copper Loop-Designed without manual service inquiry and facility reservation - Zone 1		1	UCL	UCLPW	11.11	95.21	57.09	50.38	7.93						
		2-Wire Unbundled Copper Loop-Designed without manual service inquiry and facility reservation - Zone 2		2	UCL	UCLPW	11.47	95.21	57.09	50.38	7.93						
		2-Wire Unbundled Copper Loop-Designed without manual service inquiry and facility reservation - Zone 3		3	UCL	UCLPW	11.74	95.21	57.09	50.38	7.93						
		2-Wire Unbundled Copper Loop-Designed without manual service inquiry and facility reservation - Zone 4		4	UCL	UCLPW	12.69	95.21	57.09	50.38	7.93						
		Order Coordination for Unbundled Copper Loops (per loop)			UCL	UCLMC		8.20	8.20								
		CLEC to CLEC Conversion Charge without outside dispatch (UCL-Des)			UCL	UREWO		95.21	42.40								
	4-WIRE COPPER LOOP																
		4-Wire Copper Loop-Designed including manual service inquiry and facility reservation - Zone 1		1	UCL	UCL4S	17.30	144.68	94.22	56.72	10.68						
		4-Wire Copper Loop-Designed including manual service inquiry and facility reservation - Zone 2		2	UCL	UCL4S	18.84	144.68	94.22	56.72	10.68						
		4-Wire Copper Loop-Designed including manual service inquiry and facility reservation - Zone 3		3	UCL	UCL4S	21.33	144.68	94.22	56.72	10.68						
		4-Wire Copper Loop-Designed including manual service inquiry and facility reservation - Zone 4		4	UCL	UCL4S	21.33	144.68	94.22	56.72	10.68						
		Order Coordination for Unbundled Copper Loops (per loop)			UCL	UCLMC		8.20	8.20								
		4-Wire Copper Loop-Designed without manual service inquiry and facility reservation - Zone 1		1	UCL	UCL4W	17.30	119.56	81.44	56.72	10.68						
		4-Wire Copper Loop-Designed without manual service inquiry and facility reservation - Zone 2		2	UCL	UCL4W	18.84	119.56	81.44	56.72	10.68						

UNBUNDLED NETWORK ELEMENTS - Mississippi														Attachment: 2		Exhibit: A	
CATEGORY		RATE ELEMENTS	Interim	Zone	BCS	USOC	RATES ($)					Svc Order Submitted Elec per LSR	Svc Order Submitted Manually per LSR	Incremental Charge - Manual Svc Order vs. Electronic-1st	Incremental Charge - Manual Svc Order vs. Electronic-Add'l	Incremental Charge - Manual Svc Order vs. Electronic-Disc 1st	Incremental Charge - Manual Svc Order vs. Electronic-Disc Add'l
							Rec	Nonrecurring		Nonrecurring Disconnect		OSS Rates ($)					
								First	Add'l	First	Add'l	SOMEC	SOMAN	SOMAN	SOMAN	SOMAN	SOMAN
		4-Wire Copper Loop-Designed without manual service inquiry and facility reservation - Zone 3		3	UCL	UCL4W	21.33	119.56	81.44	56.72	10.68						
		4-Wire Copper Loop-Designed without manual service inquiry and facility reservation - Zone 4		4	UCL	UCL4W	21.33	119.56	81.44	56.72	10.68						
		Order Coordination for Unbundled Copper Loops (per loop)			UCL	UCLMC		8.20	8.20								
		CLEC to CLEC Conversion Charge without outside dispatch (UCL-Des)			UCL	UREWO		95.21	42.40								
LOOP MODIFICATION																	
		Unbundled Loop Modification, Removal of Load Coils - 2 Wire pair less than or equal to 18k ft, per Unbundled Loop			UAL, UHL, UCL, UEQ, ULS, UEA, UEANL, UEPSR, UEPSB	ULM2L		32.57	32.57								
		Unbundled Loop Modification Removal of Load Coils - 4 Wire less than or equal to 18K ft, per Unbundled Loop			UHL, UCL, UEA	ULM4L		32.57	32.57								
		Unbundled Loop Modification Removal of Bridged Tap Removal, per unbundled loop			UAL, UHL, UCL, UEQ, ULS, UEA, UEANL, UEPSR, UEPSB	ULMBT		32.59	32.59								
SUB-LOOPS																	
	Sub-Loop Distribution																
		Sub-Loop - Per Cross Box Location - CLEC Feeder Facility Set-Up	I		UEANL	USBSA		259.69									
		Sub-Loop - Per Cross Box Location - Per 25 Pair Panel Set-Up	I		UEANL	USBSB		22.77									
		Sub-Loop - Per Building Equipment Room - CLEC Feeder Facility Set-Up	I		UEANL	USBSC		178.47									
		Sub-Loop - Per Building Equipment Room - Per 25 Pair Panel Set-Up	I		UEANL	USBSD		56.39									
		Sub-Loop Distribution Per 2-Wire Analog Voice Grade Loop - Zone 1	I	1	UEANL	USBN2	7.15	66.18	31.14	45.36	6.71						
		Sub-Loop Distribution Per 2-Wire Analog Voice Grade Loop - Zone 2	I	2	UEANL	USBN2	9.51	66.18	31.14	45.36	6.71						
		Sub-Loop Distribution Per 2-Wire Analog Voice Grade Loop - Zone 3	I	3	UEANL	USBN2	12.45	66.18	31.14	45.36	6.71						
		Sub-Loop Distribution Per 2-Wire Analog Voice Grade Loop - Zone 4		4	UEANL	USBN2	18.26	66.18	31.14	45.36	6.71						
		Order Coordination for Unbundled Sub-Loops, per sub-loop pair			UEANL	USBMC		8.20	8.20								
		Sub-Loop Distribution Per 4-Wire Analog Voice Grade Loop - Zone 1		1	UEANL	USBN4	7.30	79.49	44.45	51.27	9.35						
		Sub-Loop Distribution Per 4-Wire Analog Voice Grade Loop - Zone 2		2	UEANL	USBN4	13.92	79.49	44.45	51.27	9.35						
		Sub-Loop Distribution Per 4-Wire Analog Voice Grade Loop - Zone 3		3	UEANL	USBN4	16.73	79.49	44.45	51.27	9.35						
		Sub-Loop Distribution Per 4-Wire Analog Voice Grade Loop - Zone 4		4	UEANL	USBN4	16.73	79.49	44.45	51.27	9.35						
		Order Coordination for Unbundled Sub-Loops, per sub-loop pair			UEANL	USBMC		8.20	8.20								
		Sub-Loop 2-Wire Intrabuilding Network Cable (INC)	I		UEANL	USBR2	2.29	53.32	18.28	45.36	6.71						
		Order Coordination for Unbundled Sub-Loops, per sub-loop pair			UEANL	USBMC		8.20	8.20								
		Sub-Loop 4-Wire Intrabuilding Network Cable (INC)	I		UEANL	USBR4	4.40	59.60	24.55	51.27	9.35						
		Order Coordination for Unbundled Sub-Loops, per sub-loop pair			UEANL	USBMC		8.20	8.20								
		2 Wire Copper Unbundled Sub-Loop Distribution - Zone 1	I	1	UEF	UCS2X	6.06	66.18	31.14	45.36	6.71						
		2 Wire Copper Unbundled Sub-Loop Distribution - Zone 2	I	2	UEF	UCS2X	7.09	66.18	31.14	45.36	6.71						
		2 Wire Copper Unbundled Sub-Loop Distribution - Zone 3	I	3	UEF	UCS2X	8.16	66.18	31.14	45.36	6.71						
		2 Wire Copper Unbundled Sub-Loop Distribution - Zone 4		4	UEF	UCS2X	9.90	66.18	31.14	45.36	6.71						

UNBUNDLED NETWORK ELEMENTS - Mississippi														Attachment: 2		Exhibit: A	
CATEGORY		RATE ELEMENTS	Interim	Zone	BCS	USOC	RATES ($)					Svc Order Submitted Elec per LSR	Svc Order Submitted Manually per LSR	Incremental Charge - Manual Svc Order vs. Electronic-1st	Incremental Charge - Manual Svc Order vs. Electronic-Add'l	Incremental Charge - Manual Svc Order vs. Electronic-Disc 1st	Incremental Charge - Manual Svc Order vs. Electronic-Disc Add'l
							Rec	Nonrecurring		Nonrecurring Disconnect		OSS Rates ($)					
								First	Add'l	First	Add'l	SOMEC	SOMAN	SOMAN	SOMAN	SOMAN	SOMAN
		Order Coordination for Unbundled Sub-Loops, per sub-loop pair			UEF	USBMC		8.20	8.20								
		4 Wire Copper Unbundled Sub-Loop Distribution - Zone 1	I	1	UEF	UCS4X	5.10	79.49	44.45	51.27	9.35						
		4 Wire Copper Unbundled Sub-Loop Distribution - Zone 2	I	2	UEF	UCS4X	9.11	79.49	44.45	51.27	9.35						
		4 Wire Copper Unbundled Sub-Loop Distribution - Zone 3	I	3	UEF	UCS4X	14.00	79.49	44.45	51.27	9.35						
		4 Wire Copper Unbundled Sub-Loop Distribution - Zone 4		4	UEF	UCS4X	14.00	79.49	44.45	51.27	9.35						
		Order Coordination for Unbundled Sub-Loops, per sub-loop pair			UEF	USBMC		8.20	8.20								
		Loop Testing - Basic 1st Half Hour			UEF	URET1		34.36	34.36								
		Loop Testing - Basic Additional Half Hour			UEF	URETA		19.97	19.97								
	Unbundled Network Terminating Wire (UNTW)																
		Unbundled Network Terminating Wire (UNTW) per Pair			UENTW	UENPP	0.3366	30.55									
	Network Interface Device (NID)																
		Network Interface Device (NID) - 1-2 lines			UENTW	UND12		43.84	28.90								
		Network Interface Device (NID) - 1-6 lines			UENTW	UND16		65.30	50.36								
		Network Interface Device Cross Connect - 2 W			UENTW	UNDC2		5.94	5.94								
		Network Interface Device Cross Connect - 4W			UENTW	UNDC4		5.94	5.94								
UNE OTHER, PROVISIONING ONLY - NO RATE																	
		NID - Dispatch and Service Order for NID installation			UENTW	UNDBX	0.00	0.00									
		UNTW Circuit Id Establishment, Provisioning Only - No Rate			UENTW	UENCE	0.00	0.00									
		Unbundled Contract Name, Provisioning Only - No Rate			UEANL,UEF,UEQ,UENTW	UNECN	0.00	0.00									
		Unbundled Sub-Loop Feeder-2 Wire Cross Box Jumper - no rate			UEA,UDN,UCL,UDC	USBFQ	0.00	0.00									
		Unbundled Sub-Loop Feeder-4 Wire Cross Box Jumper - no rate			UEA,USL,UCL,UDL	USBFR	0.00	0.00									
HIGH CAPACITY UNBUNDLED LOCAL LOOP																	
		High Capacity Unbundled Local Loop - DS3 - Per Mile per month			UE3	1L5ND	11.20										
		High Capacity Unbundled Local Loop - DS3 - Facility Termination per month			UE3	UE3PX	326.15	454.13	265.47	123.23	86.19						
		High Capacity Unbundled Local Loop - STS-1 - Per Mile per month			UDLSX	1L5ND	11.20										
		High Capacity Unbundled Local Loop - STS-1 - Facility Termination per month			UDLSX	UDLS1	338.55	454.13	265.47	123.23	86.19						
LOOP MAKE-UP																	
		Loop Makeup - Preordering Without Reservation, per working or spare facility queried (Manual).			UMK	UMKLW		24.12	24.12								
		Loop Makeup - Preordering With Reservation, per spare facility queried (Manual).			UMK	UMKLP		25.58	25.58								
		Loop Makeup--With or Without Reservation, per working or spare facility queried (Mechanized)			UMK	UMKMQ		0.6652	0.6652								
LINE SHARING AND LINE SPLITTING																	
	NOTE 1: The Line Sharing monthly recurring rates for all installations completed from October 02, 2003 through midnight October 01, 2004 shall be billed as follows:																
	NOTE 1: 10/02/2003 – 10/01/2004: 25% of the rate for an unbundled copper loop non-designed ("UCLND")																
	NOTE 1: 10/02/2004 – 10/01/2005: 50% of the rate for UCLND																
	NOTE 1: 10/02/2005 – 10/01/2006: 75% of the rate for UCLND																
	NOTE 1: Above will apply to USOCS: ULSDT and ULSCT																
	****NOTE 2: The Line Sharing monthly recurring rates with USOCs ULSDC and ULSCC applies only to circuits installed and inservice on or before October 1, 2003**																
	LINE SHARING																
	SPLITTERS-CENTRAL OFFICE BASED																
		Line Sharing Splitter, per System 96 Line Capacity			ULS	ULSDA	186.67	189.89	0.00	178.41	0.00						
		Line Sharing Splitter, per System 24 Line Capacity			ULS	ULSDB	46.67	189.89	0.00	178.41	0.00						
		Line Sharing Splitter, Per System, 8 Line Capacity			ULS	ULSD8	15.55	189.89	0.00	178.41	0.00						
		Line Sharing-DLEC Owned Splitter in CO-CFA activaton-deactivation (per LSOD)			ULS	ULSDG		86.98	0.00	49.96	0.00						
	END USER ORDERING-CENTRAL OFFICE BASED LINE SHARING																
		Line Sharing - per Line Activation (BST Owned splitter) - OBSOLETE see **NOTE 2			ULS	ULSDC	0.61	18.62	10.66	10.04	4.93						

UNBUNDLED NETWORK ELEMENTS - Mississippi														Attachment: 2		Exhibit: A	
CATEGORY		RATE ELEMENTS	Interim	Zone	BCS	USOC	RATES ($)					Svc Order Submitted Elec per LSR	Svc Order Submitted Manually per LSR	Incremental Charge - Manual Svc Order vs. Electronic-1st	Incremental Charge - Manual Svc Order vs. Electronic-Add'l	Incremental Charge - Manual Svc Order vs. Electronic-Disc 1st	Incremental Charge - Manual Svc Order vs. Electronic-Disc Add'l
							Rec	Nonrecurring		Nonrecurring Disconnect		OSS Rates ($)					
								First	Add'l	First	Add'l	SOMEC	SOMAN	SOMAN	SOMAN	SOMAN	SOMAN
		Line Share Service, TRO per line activation, BST owned splitter - Central Office Located (50% of UCLND) - please see NOTE 1 (E:10/2/2004)			ULS	ULSDT	5.51	18.62	10.66	10.04	4.93						
		Line Share Service, TRO per line activation, BST owned splitter - Central Office Located (75% of UCLND) - please see NOTE 1 (E:10/2/2005)			ULS	ULSDT	8.26	18.62	10.66	10.04	4.93						
		Line Sharing - per Subsequent Activity per Line Rearrangement(BST Owned Splitter)			ULS	ULSDS		16.48	8.24								
		Line Sharing - per Subsequent Activity per Line Rearrangement(DLEC Owned Splitter)			ULS	ULSCS		16.48	8.24								
		Line Sharing - per Line Activation (DLEC owned Splitter) - OBSOLETE see **NOTE 2			ULS	ULSCC	0.61	47.44	19.31	20.67	12.74						
		Line Share Service, TRO per line activation, CLEC owned splitter - Central Office Located (50% of UCLND) - please see NOTE 1 (E:10/2/2004)			ULS	ULSCT	5.51	47.44	19.31	20.67	12.74						
		Line Share Service, TRO per line activation, CLEC owned splitter - Central Office Located (75% of UCLND) - please see NOTE 1 (E:10/2/2005)			ULS	ULSCT	8.26	47.44	19.31	20.67	12.74						
	LINE SPLITTING																
	MAINTENANCE																
		No Trouble Found - per 1/2 hour increments - Basic						80.00	55.00								
		No Trouble Found - per 1/2 hour increments - Overtime						120.00	82.50								
		No Trouble Found - per 1/2 hour increments - Premium						160.00	110.00								
UNBUNDLED DEDICATED TRANSPORT																	
	INTEROFFICE CHANNEL - DEDICATED TRANSPORT																
		Interoffice Channel - Dedicated Transport - 2-Wire Voice Grade - Per Mile per month			U1TVX	1L5XX	0.0098										
		Interoffice Channel - Dedicated Transport- 2- Wire Voice Grade - Facility Termination			U1TVX	U1TV2	22.52	40.77	27.57	17.26	7.11						
		Interoffice Channel - Dedicated Transpor t- 2-Wire Voice Grade Rev Bat. - Per Mile per month			U1TVX	1L5XX	0.0098										
		Interoffice Channel - Dedicated Transport- 2- Wire VG Rev Bat. - Facility Termination			U1TVX	U1TR2	22.52	40.77	27.57	17.26	7.11						
		Interoffice Channel - Dedicated Transport - 4-Wire Voice Grade - Per Mile per month			U1TVX	1L5XX	0.0098										
		Interoffice Channel - Dedicated Transport - 4- Wire Voice Grade - Facility Termination			U1TVX	U1TV4	19.79	40.77	27.57	17.26	7.11						
		Interoffice Channel - Dedicated Transport - 56 kbps - per mile per month			U1TDX	1L5XX	0.0098										
		Interoffice Channel - Dedicated Transport - 56 kbps - Facility Termination			U1TDX	U1TD5	15.68	40.78	27.57	17.26	7.11						
		Interoffice Channel - Dedicated Transport - 64 kbps - per mile per month			U1TDX	1L5XX	0.0098										
		Interoffice Channel - Dedicated Transport - 64 kbps - Facility Termination			U1TDX	U1TD6	15.68	40.78	27.57	17.26	7.11						
		Interoffice Channel - Dedicated Channel - DS1 - Per Mile per month			U1TD1	1L5XX	0.201										
		Interoffice Channel - Dedicated Tranport - DS1 - Facility Termination			U1TD1	U1TF1	57.33	89.79	82.28	16.86	14.90						
		Interoffice Channel - Dedicated Transport - DS3 - Per Mile per month			U1TD3	1L5XX	4.76										
		Interoffice Channel - Dedicated Transport - DS3 - Facility Termination per month			U1TD3	U1TF3	641.90	280.37	163.70	62.08	60.29						
		Interoffice Channel - Dedicated Transport - STS-1 - Per Mile per month			U1TS1	1L5XX	4.76										
		Interoffice Channel - Dedicated Transport - STS-1 - Facility Termination			U1TS1	U1TFS	644.21	280.37	163.70	62.08	60.29						
DARK FIBER																	

UNBUNDLED NETWORK ELEMENTS - Mississippi														Attachment: 2		Exhibit: A	
CATEGORY		RATE ELEMENTS	Interim	Zone	BCS	USOC	RATES ($)					Svc Order Submitted Elec per LSR	Svc Order Submitted Manually per LSR	Incremental Charge - Manual Svc Order vs. Electronic-1st	Incremental Charge - Manual Svc Order vs. Electronic-Add'l	Incremental Charge - Manual Svc Order vs. Electronic-Disc 1st	Incremental Charge - Manual Svc Order vs. Electronic-Disc Add'l
							Rec	Nonrecurring		Nonrecurring Disconnect		OSS Rates ($)					
								First	Add'l	First	Add'l	SOMEC	SOMAN	SOMAN	SOMAN	SOMAN	SOMAN
		Dark Fiber, Four Fiber Strands, Per Route Mile or Fraction Thereof per month - Interoffice Channel			UDF, UDFCX	1L5DF	28.27										
		NRC Dark Fiber - Interoffice Channel			UDF, UDFCX	UDF14		642.79	138.67	326.97	203.85						
		Dark Fiber, Four Fiber Strands, Per Route Mile or Fraction Thereof per month - Local Loop			UDF, UDFCX	1L5DL	59.95										
		NRC Dark Fiber - Local Loop			UDF, UDFCX	UDFL4		642.79	138.67	326.97	203.85						
SIGNALING (CCS7)																	
		CCS7 Signaling Termination, Per STP Port			UDB	PT8SX	132.21										
		CCS7 Signaling Connection, Per link (A link)			UDB	TPP6A	16.55	35.74	35.74	16.53	16.53						
		CCS7 Signaling Connection, Per link (B link) (also known as D link)			UDB	TPP6B	16.55	35.74	35.74	16.53	16.53						
		CCS7 Signaling Connection-A link, per month			UDB	TPP9A	16.55	35.74	35.74	16.53	16.53						
		CCS7 Signaling Connection-B link(also known as D link) per month			UDB	TPP9B	16.55	35.74	35.74	16.53	16.53						
		CCS7 Signaling Usage Surrogate, per link per LATA			UDB	STU56	683.55										
		CCS7 Signaling Point Code, per Originating Point Code Establishment or Change, per STP affected			UDB	CCAPO		29.18	29.18	35.78	35.78						
E911 SERVICE																	
		Local Channel - Dedicated - 2-wr Voice Grade					14.91	194.22	33.36	37.79	3.30						
		Interoffice Transport - Dedicated - 2-wr Voice Grade Per Mile					0.0098										
		Interoffice Transport - Dedicated - 2-wr Voice Grade Per Facility Termination					22.52	40.77	27.57	17.26	7.11						
		Local Channel - Dedicated - DS1 - Zone 1					36.83	178.50	154.61	22.89	15.74						
		Local Channel - Dedicated - DS1 - Zone 2					35.99	178.50	154.61	22.89	15.74						
		Local Channel - Dedicated - DS1 - Zone 3					221.63	178.50	154.61	22.89	15.74						
		Local Channel - Dedicated - DS1 - Zone 4					221.63	178.50	154.61	22.89	15.74						
		Interoffice Transport - Dedicated - DS1 Per Mile					0.2010										
		Interoffice Transport - Dedicated - DS1 Per Facility Termination					57.33	89.79	82.28	16.86	14.90						
SELECTIVE ROUTING																	
		Selective Routing Per Unique Line Class Code Per Request Per Switch						85.19	85.19	14.19	14.19						
ENHANCED EXTENDED LINK (EELs)																	
	NOTE: The monthly recurring and non-recurring charges below will apply and the Switch-As-Is Charge will not apply for UNE combinations provisioned as ' Ordinarily Combined' Network Elements.																
	NOTE: The monthly recurring and the Switch-As-Is Charge and not the non-recurring charges below will apply for UNE combinations provisioned as ' Currently Combined' Network Elements.																
	EXTENTED 2-WIRE VOICE GRADE EXTENDED LOOP WITH DEDICATED DS1 INTEROFFICE TRANSPORT																
		First 2-Wire VG Loop (SL2) in Combination - Zone 1		1	UNCVX	UEAL2	13.89	105.96	68.28	52.82	10.37						
		First 2-Wire VG Loop (SL2) in Combination - Zone 2		2	UNCVX	UEAL2	18.75	105.96	68.28	52.82	10.37						
		First 2-Wire VG Loop (SL2) in Combination - Zone 3		3	UNCVX	UEAL2	27.55	105.96	68.28	52.82	10.37						
		First 2-Wire VG Loop (SL2) in Combination - Zone 4		4	UNCVX	UEAL2	45.72	105.96	68.28	52.82	10.37						
		Interoffice Transport - Dedicated - DS1 combination - Per Mile per month			UNC1X	1L5XX	0.1813										
		Interoffice Transport - Dedicated - DS1 combination - Facility Termination per month			UNC1X	U1TF1	51.72	89.79	82.28	16.86	14.90						
		1/0 Channelization System in combination Per Month			UNC1X	MQ1	102.85	91.57	62.94	10.87	10.10						
		Voice Grade COCI - Per Month			UNCVX	1D1VG	0.5737	6.62	4.74								
		Each Additional 2-Wire VG Loop (SL 2) in Combination - Zone 1		1	UNCVX	UEAL2	13.89	105.96	68.28	52.82	10.37						
		Each Additional 2-Wire VG Loop (SL 2) in Combination - Zone 2		2	UNCVX	UEAL2	18.75	105.96	68.28	52.82	10.37						
		Each Additional 2-Wire VG Loop (SL 2) in Combination - Zone 3		3	UNCVX	UEAL2	27.55	105.96	68.28	52.82	10.37						
		Each Additional 2-Wire VG Loop (SL 2) in Combination - Zone 4		4	UNCVX	UEAL2	45.72	105.96	68.28	52.82	10.37						
		Voice Grade COCI - Per Month			UNCVX	1D1VG	0.5737	6.62	4.74								
		Nonrecurring Currently Combined Network Elements Switch -As-Is Charge			UNC1X	UNCCC		5.63	5.63	7.20	7.20						
	EXTENDED 4-WIRE VOICE GRADE EXTENDED LOOP WITH DEDICATED DS1 INTEROFFICE TRANSPORT																

UNBUNDLED NETWORK ELEMENTS - Mississippi														Attachment: 2		Exhibit: A	
CATEGORY		RATE ELEMENTS	Interim	Zone	BCS	USOC	RATES ($)					Svc Order Submitted Elec per LSR	Svc Order Submitted Manually per LSR	Incremental Charge - Manual Svc Order vs. Electronic-1st	Incremental Charge - Manual Svc Order vs. Electronic-Add'l	Incremental Charge - Manual Svc Order vs. Electronic-Disc 1st	Incremental Charge - Manual Svc Order vs. Electronic-Disc Add'l
							Rec	Nonrecurring		Nonrecurring Disconnect		OSS Rates ($)					
								First	Add'l	First	Add'l	SOMEC	SOMAN	SOMAN	SOMAN	SOMAN	SOMAN
		First 4-Wire Analog Voice Grade Loop in Combination - Zone 1		1	UNCVX	UEAL4	27.47	132.27	94.59	60.68	14.64						
		First 4-Wire Analog Voice Grade Loop in Combination - Zone 2		2	UNCVX	UEAL4	38.26	132.27	94.59	60.68	14.64						
		First 4-Wire Analog Voice Grade Loop in Combination - Zone 3		3	UNCVX	UEAL4	50.03	132.27	94.59	60.68	14.64						
		First 4-Wire Analog Voice Grade Loop in Combination - Zone 4		4	UNCVX	UEAL4	50.03	132.27	94.59	60.68	14.64						
		Interoffice Transport - Dedicated - DS1 combination - Per Mile Per Month			UNC1X	1L5XX	0.1813										
		Interoffice Transport - Dedicated - DS1 - Facility Termination Per Month			UNC1X	U1TF1	51.72	89.79	82.28	16.86	14.90						
		1/0 Channel System in combination Per Month			UNC1X	MQ1	102.85	91.57	62.94	10.87	10.10						
		Voice Grade COCI in combination - per month			UNCVX	1D1VG	0.5737	6.62	4.74								
		Additional 4-Wire Analog Voice Grade Loop in same DS1 Interoffice Transport Combination - Zone 1		1	UNCVX	UEAL4	27.47	132.27	94.59	60.68	14.64						
		Additional 4-Wire Analog Voice Grade Loop in same DS1 Interoffice Transport Combination - Zone 2		2	UNCVX	UEAL4	38.26	132.27	94.59	60.68	14.64						
		Additional 4-Wire Analog Voice Grade Loop in same DS1 Interoffice Transport Combination - Zone 3		3	UNCVX	UEAL4	50.03	132.27	94.59	60.68	14.64						
		Additional 4-Wire Analog Voice Grade Loop in same DS1 Interoffice Transport Combination - Zone 4		4	UNCVX	UEAL4	50.03	132.27	94.59	60.68	14.64						
		Additional Voice Grade COCI in combination - per month			UNCVX	1D1VG	0.5737	6.62	4.74								
		Nonrecurring Currently Combined Network Elements Switch -As-Is Charge			UNC1X	UNCCC		5.63	5.63	7.20	7.20						
	EXTENDED 4-WIRE 56 KBPS EXTENDED DIGITAL LOOP WITH DEDICATED DS1 INTEROFFICE TRANSPORT																
		First 4-Wire 56Kbps Digital Grade Loop in Combination - Zone 1		1	UNCDX	UDL56	27.44	126.53	88.85	60.68	14.64						
		First 4-Wire 56Kbps Digital Grade Loop in Combination - Zone 2		2	UNCDX	UDL56	34.55	126.53	88.85	60.68	14.64						
		First 4-Wire 56Kbps Digital Grade Loop in Combination - Zone 3		3	UNCDX	UDL56	40.76	126.53	88.85	60.68	14.64						
		First 4-Wire 56Kbps Digital Grade Loop in Combination - Zone 4		4	UNCDX	UDL56	32.25	126.53	88.85	60.68	14.64						
		Interoffice Transport - Dedicated - DS1 combination - Per Mile Per Month			UNC1X	1L5XX	0.1813										
		Interoffice Transport - Dedicated - DS1 - combination Facility Termination Per Month			UNC1X	U1TF1	51.72	89.79	82.28	16.86	14.90						
		1/0 Channel System in combination Per Month			UNC1X	MQ1	102.85	91.57	62.94	10.87	10.10						
		OCU-DP COCI (data) per month (2.4-64kbs)			UNCDX	1D1DD	1.22	6.62	4.74	0.00	0.00						
		Additional 4-Wire 56Kbps Digital Grade Loop in same DS1 Interoffice Transport Combination - Zone 1		1	UNCDX	UDL56	27.44	126.53	88.85	60.68	14.64						
		Additional 4-Wire 56Kbps Digital Grade Loop in same DS1 Interoffice Transport Combination - Zone 2		2	UNCDX	UDL56	34.55	126.53	88.85	60.68	14.64						
		Additional 4-Wire 56Kbps Digital Grade Loop in same DS1 Interoffice Transport Combination - Zone 3		3	UNCDX	UDL56	40.76	126.53	88.85	60.68	14.64						
		Additional 4-Wire 56Kbps Digital Grade Loop in same DS1 Interoffice Transport Combination - Zone 4		4	UNCDX	UDL56	32.25	126.53	88.85	60.68	14.64						
		Additional OCU-DP COCI (data) - in combination per month (2.4-64kbs)			UNCDX	1D1DD	1.22	6.62	4.74	0.00	0.00						
		Nonrecurring Currently Combined Network Elements Switch -As-Is Charge			UNC1X	UNCCC		5.63	5.63	7.20	7.20						
	EXTENDED 4-WIRE 64 KBPS EXTENDED DIGITAL LOOP WITH DEDICATED DS1 INTEROFFICE TRANSPORT																
		First 4-Wire 64Kbps Digital Grade Loop in Combination - Zone 1		1	UNCDX	UDL64	27.44	126.53	88.85	60.68	14.64						
		First 4-Wire 64Kbps Digital Grade Loop in Combination - Zone 2		2	UNCDX	UDL64	34.55	126.53	88.85	60.68	14.64						
		First 4-Wire 64Kbps Digital Grade Loop in Combination - Zone 3		3	UNCDX	UDL64	40.76	126.53	88.85	60.68	14.64						

UNBUNDLED NETWORK ELEMENTS - Mississippi														Attachment: 2		Exhibit: A	
CATEGORY		RATE ELEMENTS	Interim	Zone	BCS	USOC	RATES ($)					Svc Order Submitted Elec per LSR	Svc Order Submitted Manually per LSR	Incremental Charge - Manual Svc Order vs. Electronic-1st	Incremental Charge - Manual Svc Order vs. Electronic-Add'l	Incremental Charge - Manual Svc Order vs. Electronic-Disc 1st	Incremental Charge - Manual Svc Order vs. Electronic-Disc Add'l
							Rec	Nonrecurring		Nonrecurring Disconnect		OSS Rates ($)					
								First	Add'l	First	Add'l	SOMEC	SOMAN	SOMAN	SOMAN	SOMAN	SOMAN
		First 4-Wire 64Kbps Digital Grade Loop in Combination - Zone 4		4	UNCDX	UDL64	32.25	126.53	88.85	60.68	14.64						
		Interoffice Transport - Dedicated - DS1 combination - Per Mile Per Month			UNC1X	1L5XX	0.1813										
		interoffice Transport - Dedicated - DS1 combination - Facility Termination Per Month			UNC1X	U1TF1	51.72	89.79	82.28	16.86	14.90						
		1/0 Channel System in combination Per Month			UNC1X	MQ1	102.85	91.57	62.94	10.87	10.10						
		OCU-DP COCI (data) - in combination - per month (2.4-64kbs)			UNCDX	1D1DD	1.22	6.62	4.74	0.00	0.00						
		Additional 4-Wire 64Kbps Digital Grade Loop in same DS1 Interoffice Transport Combination - Zone 1		1	UNCDX	UDL64	27.44	126.53	88.85	60.68	14.64						
		Additional 4-Wire 64Kbps Digital Grade Loop in same DS1 Interoffice Transport Combination - Zone 2		2	UNCDX	UDL64	34.55	126.53	88.85	60.68	14.64						
		Additional 4-Wire 64Kbps Digital Grade Loop in same DS1 Interoffice Transport Combination - Zone 3		3	UNCDX	UDL64	40.76	126.53	88.85	60.68	14.64						
		Additional 4-Wire 64Kbps Digital Grade Loop in same DS1 Interoffice Transport Combination - Zone 4		4	UNCDX	UDL64	32.25	126.53	88.85	60.68	14.64						
		Additional OCU-DP COCI (data) - in combination - per month (2.4-64kbs)			UNCDX	1D1DD	1.22	6.62	4.74	0.00	0.00						
		Nonrecurring Currently Combined Network Elements Switch -As-Is Charge			UNC1X	UNCCC		5.63	5.63	7.20	7.20						
	EXTENDED 4-WIRE DS1 DIGITAL EXTENDED LOOP WITH DEDICATED DS1 INTEROFFICE TRANSPORT																
		4-Wire DS1 Digital Loop in Combination - Zone 1		1	UNC1X	USLXX	79.08	253.93	158.45	46.10	12.07						
		4-Wire DS1 Digital Loop in Combination - Zone 2		2	UNC1X	USLXX	129.38	253.93	158.45	46.10	12.07						
		4-Wire DS1 Digital Loop in Combination - Zone 3		3	UNC1X	USLXX	206.74	253.93	158.45	46.10	12.07						
		4-Wire DS1 Digital Loop in Combination - Zone 4		4	UNC1X	USLXX	458.46	253.93	158.45	46.10	12.07						
		Interoffice Transport - Dedicated - DS1 combination - Per Mile Per Month			UNC1X	1L5XX	0.1813										
		Interoffice Transport - Dedicated - DS1 combination - Facility Termination Per Month			UNC1X	U1TF1	51.72	89.79	82.28	16.86	14.90						
		Nonrecurring Currently Combined Network Elements Switch -As-Is Charge			UNC1X	UNCCC		5.63	5.63	7.20	7.20						
	EXTENDED 4-WIRE DS1 DIGITAL EXTENDED LOOP WITH DEDICATED DS3 INTEROFFICE TRANSPORT																
		First DS1Loop in Combination - Zone 1		1	UNC1X	USLXX	79.08	253.93	158.45	46.10	12.07						
		First DS1Loop in Combination - Zone 2		2	UNC1X	USLXX	129.38	253.93	158.45	46.10	12.07						
		First DS1Loop in Combination - Zone 3		3	UNC1X	USLXX	206.74	253.93	158.45	46.10	12.07						
		First DS1Loop in Combination - Zone 4		4	UNC1X	USLXX	458.46	253.93	158.45	46.10	12.07						
		Interoffice Transport - Dedicated - DS3 combination - Per Mile Per Month			UNC3X	1L5XX	4.29										
		Interoffice Transport - Dedicated - DS3 - Facility Termination per month			UNC3X	U1TF3	641.90	280.37	163.70	62.08	60.29						
		3/1Channel System in combination per month			UNC3X	MQ3	170.63	179.17	94.52	34.30	32.82						
		DS1 COCI in combination per month			UNC1X	UC1D1	2.62	6.62	4.74	0.00	0.00						
		Additional DS1Loop in DS3 Interoffice Transport Combination - Zone 1		1	UNC1X	USLXX	79.08	253.93	158.45	46.10	12.07						
		Additional DS1Loop in DS3 Interoffice Transport Combination - Zone 2		2	UNC1X	USLXX	129.38	253.93	158.45	46.10	12.07						
		Additional DS1Loop in DS3 Interoffice Transport Combination - Zone 3		3	UNC1X	USLXX	206.74	253.93	158.45	46.10	12.07						
		Additional DS1Loop in DS3 Interoffice Transport Combination - Zone 4		4	UNC1X	USLXX	458.46	253.93	158.45	46.10	12.07						
		Additoinal DS1 COCI in combination per month			UNC1X	UC1D1	2.62	6.62	4.74	0.00	0.00						
		Nonrecurring Currently Combined Network Elements Switch -As-Is Charge			UNC3X	UNCCC		5.63	5.63	7.20	7.20						
	EXTENDED 2-WIRE VOICE GRADE EXTENDED LOOP/ 2 WIRE VOICE GRADE INTEROFFICE TRANSPORT																
		2-WireVG Loop in combination - Zone 1		1	UNCVX	UEAL2	13.89	105.96	68.28	52.82	10.37						
		2-WireVG Loop in combination - Zone 2		2	UNCVX	UEAL2	18.75	105.96	68.28	52.82	10.37						
		2-WireVG Loop in combination - Zone 3		3	UNCVX	UEAL2	27.55	105.96	68.28	52.82	10.37						
		2-WireVG Loop in combination - Zone 4		4	UNCVX	UEAL2	45.72	105.96	68.28	52.82	10.37						

UNBUNDLED NETWORK ELEMENTS - Mississippi														Attachment: 2		Exhibit: A	
CATEGORY		RATE ELEMENTS	Interim	Zone	BCS	USOC	RATES ($)					Svc Order Submitted Elec per LSR	Svc Order Submitted Manually per LSR	Incremental Charge - Manual Svc Order vs. Electronic-1st	Incremental Charge - Manual Svc Order vs. Electronic-Add'l	Incremental Charge - Manual Svc Order vs. Electronic-Disc 1st	Incremental Charge - Manual Svc Order vs. Electronic-Disc Add'l
							Rec	Nonrecurring		Nonrecurring Disconnect		OSS Rates ($)					
								First	Add'l	First	Add'l	SOMEC	SOMAN	SOMAN	SOMAN	SOMAN	SOMAN
		Interoffice Transport - 2-wire VG - Dedicated- Per Mile Per Month			UNCVX	1L5XX	0.00088										
		Interoffice Transport - 2-wire VG - Dedicated - Facility Termination per month			UNCVX	U1TV2	20.32	40.77	27.57	17.26	7.11						
		Nonrecurring Currently Combined Network Elements Switch -As-Is Charge			UNCVX	UNCCC		5.63	5.63	7.20	7.20						
	EXTENDED 4-WIRE VOICE GRADE EXTENDED LOOP/ 4 WIRE VOICE GRADE INTEROFFICE TRANSPORT																
		4-WireVG Loop in combination - Zone 1		1	UNCVX	UEAL4	27.47	132.27	94.59	60.68	14.64						
		4-WireVG Loop in combination - Zone 2		2	UNCVX	UEAL4	38.26	132.27	94.59	60.68	14.64						
		4-WireVG Loop in combination - Zone 3		3	UNCVX	UEAL4	50.03	132.27	94.59	60.68	14.64						
		4-WireVG Loop in combination - Zone 4		4	UNCVX	UEAL4	50.03	132.27	94.59	60.68	14.64						
		Interoffice Transport - 4-wire VG - Dedicated - Per Mile Per Month			UNCVX	1L5XX	0.00088										
		Interoffice Transport - 4-wire VG - Dedicated - Facility Termination per month			UNCVX	U1TV4	17.86	40.77	27.57	17.26	7.11						
		Nonrecurring Currently Combined Network Elements Switch -As-Is Charge			UNCVX	UNCCC		5.63	5.63	7.20	7.20						
	EXTENDED DS3 DIGITAL EXTENDED LOOP WITH DEDICATED DS3 INTEROFFICE TRANSPORT																
		DS3 Local Loop in combination - per mile per month			UNC3X	1L5ND	11.20										
		DS3 Local Loop in combination - Facility Termination per month			UNC3X	UE3PX	252.17	454.13	265.47	123.23	86.19						
		Interoffice Transport - Dedicated - DS3 - Per Mile per month			UNC3X	1L5XX	4.29										
		Interoffice Transport - Dedicated - DS3 combination - Facility Termination per month			UNC3X	U1TF3	641.90	280.37	163.70	62.08	60.29						
		Nonrecurring Currently Combined Network Elements Switch -As-Is Charge			UNC3X	UNCCC		5.63	5.63	7.20	7.20						
	EXTENDED STS-1 DIGITAL EXTENDED LOOP WITH DEDICATED STS-1 INTEROFFICE TRANSPORT																
		STS-1 Local Lolp in combination - per mile per month			UNCSX	1L5ND	11.20										
		STS-1 Local Loop in combination - Facility Termination per month			UNCSX	UDLS1	264.35	454.13	265.47	123.23	86.19						
		Interoffice Transport - Dedicated - STS-1 combination - per mile per month			UNCSX	1L5XX	4.29										
		Interoffice Transport - Dedicated - STS-1 combination - Facility Termination per month			UNCSX	U1TFS	644.21	280.37	163.70	62.08	60.29						
		Nonrecurring Currently Combined Network Elements Switch -As-Is Charge			UNCSX	UNCCC		5.63	5.63	7.20	7.20						
	EXTENDED 2-WIRE ISDN EXTENDED LOOP WITH DS1 INTEROFFICE TRANSPORT																
		First 2-Wire ISDN Loop in Combination - Zone 1		1	UNCNX	U1L2X	21.01	117.61	79.92	52.82	10.37						
		First 2-Wire ISDN Loop in Combination - Zone 2		2	UNCNX	U1L2X	27.59	117.61	79.92	52.82	10.37						
		First 2-Wire ISDN Loop in Combination - Zone 3		3	UNCNX	U1L2X	37.34	117.61	79.92	52.82	10.37						
		First 2-Wire ISDN Loop in Combination - Zone 4		4	UNCNX	U1L2X	59.18	117.61	79.92	52.82	10.37						
		Interoffice Transport - Dedicated - DS1 combination - per mile per month			UNC1X	1L5XX	0.1813										
		Interoffice Transport - Dedicated - DS1 combination - Facility Termination per month			UNC1X	U1TF1	51.72	89.79	82.28	16.86	14.90						
		1/0 Channel System in combination - per month			UNC1X	MQ1	102.85	91.57	62.94	10.87	10.10						
		2-wire ISDN COCI (BRITE) - in combination - per month			UNCNX	UC1CA	2.62	6.62	4.74	0.00	0.00						
		Additional 2-wire ISDN Loop in same DS1Interoffice Transport Combination - Zone 1		1	UNCNX	U1L2X	21.01	117.61	79.92	52.82	10.37						
		Additional 2-wire ISDN Loop in same DS1Interoffice Transport Combination - Zone 2		2	UNCNX	U1L2X	27.59	117.61	79.92	52.82	10.37						
		Additional 2-wire ISDN Loop in same DS1Interoffice Transport Combination - Zone 3		3	UNCNX	U1L2X	37.34	117.61	79.92	52.82	10.37						
		Additional 2-wire ISDN Loop in same DS1Interoffice Transport Combination - Zone 4		4	UNCNX	U1L2X	59.18	117.61	79.92	52.82	10.37						
		Additional 2-wire ISDN COCI (BRITE) - in combination- per month			UNCNX	UC1CA	2.62	6.62	4.74	0.00	0.00						
		Nonrecurring Currently Combined Network Elements Switch -As-Is Charge			UNC1X	UNCCC		5.63	5.63	7.20	7.20						

UNBUNDLED NETWORK ELEMENTS - Mississippi														Attachment: 2		Exhibit: A	
CATEGORY		RATE ELEMENTS	Interim	Zone	BCS	USOC	RATES ($)					Svc Order Submitted Elec per LSR	Svc Order Submitted Manually per LSR	Incremental Charge - Manual Svc Order vs. Electronic-1st	Incremental Charge - Manual Svc Order vs. Electronic-Add'l	Incremental Charge - Manual Svc Order vs. Electronic-Disc 1st	Incremental Charge - Manual Svc Order vs. Electronic-Disc Add'l
							Rec	Nonrecurring		Nonrecurring Disconnect		OSS Rates ($)					
								First	Add'l	First	Add'l	SOMEC	SOMAN	SOMAN	SOMAN	SOMAN	SOMAN
		EXTENDED 4-WIRE DS1 DIGITAL EXTENDED LOOP WITH DEDICATED STS-1 INTEROFFICE TRANSPORT															
		First DS1 Loop Combination - Zone 1		1	UNC1X	USLXX	79.08	253.93	158.45	46.10	12.07						
		First DS1 Loop Combination - Zone 2		2	UNC1X	USLXX	129.38	253.93	158.45	46.10	12.07						
		First DS1 Loop Combination - Zone 3		3	UNC1X	USLXX	206.74	253.93	158.45	46.10	12.07						
		First DS1 Loop Combination - Zone 4		4	UNC1X	USLXX	458.46	253.93	158.45	46.10	12.07						
		Interoffice Transport - Dedicated - STS-1 combination - Per Mile Per Month			UNCSX	1L5XX	4.29										
		Interoffice Transport - Dedicated - STS-1 combination - Facility Termination per month			UNCSX	U1TFS	644.21	280.37	163.70	62.08	60.29						
		3/1 Channel System in combination per month			UNCSX	MQ3	170.63	179.17	94.52	34.30	32.82						
		DS1 COCI in combination per month			UNC1X	UC1D1	2.62	6.62	4.74	0.00	0.00						
		Additional DS1Loop in the same STS-1 Interoffice Transport Combination - Zone 1		1	UNC1X	USLXX	79.08	253.93	158.45	46.10	12.07						
		Additional DS1Loop in the same STS-1 Interoffice Transport Combination - Zone 2		2	UNC1X	USLXX	129.38	253.93	158.45	46.10	12.07						
		Additional DS1Loop in the same STS-1 Interoffice Transport Combination - Zone 3		3	UNC1X	USLXX	206.74	253.93	158.45	46.10	12.07						
		Additional DS1Loop in the same STS-1 Interoffice Transport Combination - Zone 4		4	UNC1X	USLXX	458.46	253.93	158.45	46.10	12.07						
		DS1 COCI in combination per month			UNC1X	UC1D1	2.62	6.62	4.74	0.00	0.00						
		Nonrecurring Currently Combined Network Elements Switch -As-Is Charge			UNCSX	UNCCC		5.63	5.63	7.20	7.20						
		EXTENDED 4-WIRE 56 KBPS DIGITAL EXTENDED LOOP WITH 56 KBPS INTEROFFICE TRANSPORT															
		4-wire 56 kbps Local Loop in combination - Zone 1		1	UNCDX	UDL56	27.44	126.53	88.85	60.68	14.64						
		4-wire 56 kbps Local Loop in combination - Zone 2		2	UNCDX	UDL56	34.55	126.53	88.85	60.68	14.64						
		4-wire 56 kbps Local Loop in combination - Zone 3		3	UNCDX	UDL56	40.76	126.53	88.85	60.68	14.64						
		4-wire 56 kbps Local Loop in combination - Zone 4		4	UNCDX	UDL56	32.25	126.53	88.85	60.68	14.64						
		Interoffice Transport - Dedicated - 4-wire 56 kbps combination - Per Mile per month			UNCDX	1L5XX	0.0098										
		Interoffice Transport - Dedicated - 4-wire 56 kbps combination - Facility Termination per month			UNCDX	U1TD5	22.52	40.78	27.57	17.26	7.11						
		Nonrecurring Currently Combined Network Elements Switch -As-Is Charge			UNCDX	UNCCC		5.63	5.63	7.20	7.20						
		EXTENDED 4-WIRE 64 KBPS DIGITAL EXTENDED LOOP WITH 64 KBPS INTEROFFICE TRANSPORT															
		4-wire 64 kbps Lcoal Loop in Combination - Zone 1		1	UNCDX	UDL64	27.44	126.53	88.85	60.68	14.64						
		4-wire 64 kbps Lcoal Loop in Combination - Zone 2		2	UNCDX	UDL64	34.55	126.53	88.85	60.68	14.64						
		4-wire 64 kbps Lcoal Loop in Combination - Zone 3		3	UNCDX	UDL64	40.76	126.53	88.85	60.68	14.64						
		4-wire 64 kbps Lcoal Loop in Combination - Zone 4		4	UNCDX	UDL64	32.25	126.53	88.85	60.68	14.64						
		Interoffice Transport - Dedicated - 4-wire 64 kbps combination - Per Mile per month			UNCDX	1L5XX	0.0098										
		Interoffice Transport - Dedicated - 4-wire 64 kbps combination - Facility Termination per month			UNCDX	U1TD6	22.52	40.78	27.57	17.26	7.11						
		Nonrecurring Currently Combined Network Elements Switch -As-Is Charge			UNCDX	UNCCC		5.63	5.63	7.20	7.20						
		EXTENDED 2-WIRE VOICE GRADE LOOP WITH DS1 INTEROFFICE TRANSPORT w/ 3/1 MUX															
		First 2-wire VG Loop (SL2) in Combination - Zone 1		1	UNCVX	UEAL2	13.89	105.96	68.28	52.82	10.37						
		First 2-wire VG Loop (SL2) in Combination - Zone 2		2	UNCVX	UEAL2	18.75	105.96	68.28	52.82	10.37						
		First 2-wire VG Loop (SL2) in Combination - Zone 3		3	UNCVX	UEAL2	27.55	105.96	68.28	52.82	10.37						
		First 2-wire VG Loop (SL2) in Combination - Zone 4		4	UNCVX	UEAL2	45.72	105.96	68.28	52.82	10.37						
		First Interoffice Transport - Dedicated - DS1 combination - Per Mile			UNC1X	1L5XX	0.1813										
		First Interoffice Transport - Dedicated - DS1 combination - Facility Termination per month			UNC1X	U1TF1	51.72	89.79	82.28	16.86	14.90						
		Per each DS1 Channelization System Per Month			UNC1X	MQ1	102.85	91.57	62.94	10.87	10.10						
		Per each Voice Grade COCI - Per Month per month			UNCVX	1D1VG	0.5737	6.62	4.74								
		3/1 Channel System in combination per month			UNC3X	MQ3	170.63	179.17	94.52	34.30	32.82						
		Per each DS1 COCI in combination per month			UNC1X	UC1D1	2.62	6.62	4.74	0.00	0.00						
		Each Additional 2-Wire VG Loop(SL 2) in the same DS1 Interoffice Transport Combination - Zone 1		1	UNCVX	UEAL2	13.89	105.96	68.28	52.82	10.37						

UNBUNDLED NETWORK ELEMENTS - Mississippi														Attachment: 2		Exhibit: A	
CATEGORY		RATE ELEMENTS	Interim	Zone	BCS	USOC	RATES ($)					Svc Order Submitted Elec per LSR	Svc Order Submitted Manually per LSR	Incremental Charge - Manual Svc Order vs. Electronic-1st	Incremental Charge - Manual Svc Order vs. Electronic-Add'l	Incremental Charge - Manual Svc Order vs. Electronic-Disc 1st	Incremental Charge - Manual Svc Order vs. Electronic-Disc Add'l
							Rec	Nonrecurring		Nonrecurring Disconnect		OSS Rates ($)					
								First	Add'l	First	Add'l	SOMEC	SOMAN	SOMAN	SOMAN	SOMAN	SOMAN
		Each Additional 2-Wire VG Loop(SL2) in the same DS1 Interoffice Transport Combination - Zone 2		2	UNCVX	UEAL2	18.75	105.96	68.28	52.82	10.37						
		Each Additional 2-Wire VG Loop(SL2) in the same DS1 Interoffice Transport Combination - Zone 3		3	UNCVX	UEAL2	27.55	105.96	68.28	52.82	10.37						
		Each Additional 2-Wire VG Loop(SL2) in the same DS1 Interoffice Transport Combination - Zone 4		4	UNCVX	UEAL2	45.72	105.96	68.28	52.82	10.37						
		Each Additional Voice Grade COCI in combination - per month			UNCVX	1D1VG	0.5737	6.62	4.74								
		Each Additional DS1 Interoffice Channel per mile in same 3/1 Channel System per month			UNC1X	1L5XX	0.1813										
		Each Additional DS1 Interoffice Channel Facility Termination in same 3/1 Channel System per month			UNC1X	U1TF1	51.72	89.79	82.28	16.86	14.90						
		Each Additional DS1 COCI combination per month			UNC1X	UC1D1	2.62	6.62	4.74	0.00	0.00						
		Nonrecurring Currently Combined Network Elements Switch -As-Is Charge			UNC1X	UNCCC		5.63	5.63	7.20	7.20						
	EXTENDED 4-WIRE VOICE GRADE LOOP WITH DEDICATED DS1 INTEROFFICE TRANSPORT w/ 3/1 MUX																
		First 4-Wire Analog Voice Grade Local Loop in Combination - Zone 1		1	UNCVX	UEAL4	27.47	132.27	94.59	60.68	14.64						
		First 4-Wire Analog Voice Grade Local Loop in Combination - Zone 2		2	UNCVX	UEAL4	38.26	132.27	94.59	60.68	14.64						
		First 4-Wire Analog Voice Grade Local Loop in Combination - Zone 3		3	UNCVX	UEAL4	50.03	132.27	94.59	60.68	14.64						
		First 4-Wire Analog Voice Grade Local Loop in Combination - Zone 4		4	UNCVX	UEAL4	50.03	132.27	94.59	60.68	14.64						
		First Interoffice Transport - Dedicated - DS1 combination - Per Mile Per Month			UNC1X	1L5XX	0.1813										
		First Interoffice Transport - Dedicated - DS1 - Facility Termination Per Month			UNC1X	U1TF1	51.72	89.79	82.28	16.86	14.90						
		Per each 1/0 Channel System in combination Per Month			UNC1X	MQ1	102.85	91.57	62.94	10.87	10.10						
		Per each Voice Grade COCI in combination - per month			UNCVX	1D1VG	0.5737	6.62	4.74								
		3/1 Channel System in combination per month			UNC3X	MQ3	170.63	179.17	94.52	34.30	32.82						
		Per each DS1 COCI in combination per month			UNC1X	UC1D1	2.62	6.62	4.74	0.00	0.00						
		Additional 4-Wire Analog Voice Grade Loop in same DS1 Interoffice Transport Combination - Zone 1		1	UNCVX	UEAL4	27.47	132.27	94.59	60.68	14.64						
		Additional 4-Wire Analog Voice Grade Loop in same DS1 Interoffice Transport Combination - Zone 2		2	UNCVX	UEAL4	38.26	132.27	94.59	60.68	14.64						
		Additional 4-Wire Analog Voice Grade Loop in same DS1 Interoffice Transport Combination - Zone 3		3	UNCVX	UEAL4	50.03	132.27	94.59	60.68	14.64						
		Additional 4-Wire Analog Voice Grade Loop in same DS1 Interoffice Transport Combination - Zone 4		4	UNCVX	UEAL4	50.03	132.27	94.59	60.68	14.64						
		Each Additional DS1 Interoffice Channel per mile in same 3/1 Channel System per month			UNC1X	1L5XX	0.1813										
		Each Additional DS1 Interoffice Channel Facility Termination in same 3/1 Channel System per month			UNC1X	U1TF1	51.72	89.79	82.28	16.86	14.90						
		Additional Voice Grade COCI - in combination - per month			UNCVX	1D1VG	0.5737	6.62	4.74								
		Nonrecurring Currently Combined Network Elements Switch -As-Is Charge			UNC1X	UNCCC		5.63	5.63	7.20	7.20						
	EXTENDED 4-WIRE 56 KBPS DIGITAL LOOP WITH DEDICATED DS1 INTEROFFICE TRANSPORT w/ 3/1 MUX																
		First 4-Wire 56Kbps Digital Grade Local Loop in Combination - Zone 1		1	UNCDX	UDL56	27.44	126.53	88.85	60.68	14.64						
		First 4-Wire 56Kbps Digital Grade Local Loop in Combination - Zone 2		2	UNCDX	UDL56	34.55	126.53	88.85	60.68	14.64						
		First 4-Wire 56Kbps Digital Grade Local Loop in Combination - Zone 3		3	UNCDX	UDL56	40.76	126.53	88.85	60.68	14.64						
		First 4-Wire 56Kbps Digital Grade Local Loop in Combination - Zone 4		4	UNCDX	UDL56	32.25	126.53	88.85	60.68	14.64						
		First Interoffice Transport - Dedicated - DS1 combination - Per Mile Per Month			UNC1X	1L5XX	0.1813										
		First Interoffice Transport - Dedicated - DS1 - combination Facility Termination Per Month			UNC1X	U1TF1	51.72	89.79	82.28	16.86	14.90						

UNBUNDLED NETWORK ELEMENTS - Mississippi														Attachment: 2		Exhibit: A	
CATEGORY		RATE ELEMENTS	Interim	Zone	BCS	USOC	RATES ($)					Svc Order Submitted Elec per LSR	Svc Order Submitted Manually per LSR	Incremental Charge - Manual Svc Order vs. Electronic-1st	Incremental Charge - Manual Svc Order vs. Electronic-Add'l	Incremental Charge - Manual Svc Order vs. Electronic-Disc 1st	Incremental Charge - Manual Svc Order vs. Electronic-Disc Add'l
							Rec	Nonrecurring		Nonrecurring Disconnect		OSS Rates ($)					
								First	Add'l	First	Add'l	SOMEC	SOMAN	SOMAN	SOMAN	SOMAN	SOMAN
		Per each 1/0 Channel System in combination Per Month			UNC1X	MQ1	102.85	91.57	62.94	10.87	10.10						
		Per each OCU-DP COCI (data) COCI per month (2.4-64kbs)			UNCDX	1D1DD	1.22	6.62	4.74	0.00	0.00						
		3/1 Channel System in combination per month			UNC3X	MQ3	170.63	179.17	94.52	34.30	32.82						
		Per each DS1 COCI in combination per month			UNC1X	UC1D1	2.62	6.62	4.74	0.00	0.00						
		Additional 4-Wire 56Kbps Digital Grade Loop in same DS1 Interoffice Transport Combination - Zone 1		1	UNCDX	UDL56	27.44	126.53	88.85	60.68	14.64						
		Additional 4-Wire 56Kbps Digital Grade Loop in same DS1 Interoffice Transport Combination - Zone 2		2	UNCDX	UDL56	34.55	126.53	88.85	60.68	14.64						
		Additional 4-Wire 56Kbps Digital Grade Loop in same DS1 Interoffice Transport Combination - Zone 3		3	UNCDX	UDL56	40.76	126.53	88.85	60.68	14.64						
		Additional 4-Wire 56Kbps Digital Grade Loop in same DS1 Interoffice Transport Combination - Zone 4		4	UNCDX	UDL56	32.25	126.53	88.85	60.68	14.64						
		OCU-DP COCI (data) COCI in combination per month (2.4-64kbs)			UNCDX	1D1DD	1.22	6.62	4.74	0.00	0.00						
		Each Additional DS1 Interoffice Channel per mile in same 3/1 Channel System per month			UNC1X	1L5XX	0.1813										
		Each Additional DS1 Interoffice Channel Facility Termination in same 3/1 Channel System per month			UNC1X	U1TF1	51.72	89.79	82.28	16.86	14.90						
		Each Additional DS1 COCI in the same 3/1 channel system combination per month			UNC1X	UC1D1	2.62	6.62	4.74	0.00	0.00						
		Nonrecurring Currently Combined Network Elements Switch -As-Is Charge			UNC1X	UNCCC		5.63	5.63	7.20	7.20						
	EXTENDED 4-WIRE 64 KBPS DIGITAL LOOP WITH DEDICATED DS1 INTEROFFICE TRANSPORT w/ 3/1 MUX																
		First 4-Wire 64Kbps Digital Grade Loop in a DS1 Interoffice Transport Combination - Zone 1		1	UNCDX	UDL64	27.44	126.53	88.85	60.68	14.64						
		First 4-Wire 64Kbps Digital Grade Loop in a DS1 Interoffice Transport Combination - Zone 2		2	UNCDX	UDL64	34.55	126.53	88.85	60.68	14.64						
		First 4-Wire 64Kbps Digital Grade Loop in a DS1 Interoffice Transport Combination - Zone 3		3	UNCDX	UDL64	40.76	126.53	88.85	60.68	14.64						
		First 4-Wire 64Kbps Digital Grade Loop in a DS1 Interoffice Transport Combination - Zone 4		4	UNCDX	UDL64	32.25	126.53	88.85	60.68	14.64						
		First Interoffice Transport - Dedicated - DS1 combination - Per Mile Per Month			UNC1X	1L5XX	0.1813										
		First Interoffice Transport - Dedicated - DS1 combination - Facility Termination Per Month			UNC1X	U1TF1	51.72	89.79	82.28	16.86	14.90						
		Per each Channel System 1/0 in combination Per Month			UNC1X	MQ1	102.85	91.57	62.94	10.87	10.10						
		Per each OCU-DP COCI (data) in combination - per month (2.4-64kbs)			UNCDX	1D1DD	1.22	6.62	4.74	0.00	0.00						
		3/1 Channel System in combination per month			UNC3X	MQ3	170.63	179.17	94.52	34.30	32.82						
		Per each DS1 COCI in combination per month			UNC1X	UC1D1	2.62	6.62	4.74	0.00	0.00						
		Additional 4-Wire 64Kbps Digital Grade Loop in same DS1 Interoffice Transport Combination - Zone 1		1	UNCDX	UDL64	27.44	126.53	88.85	60.68	14.64						
		Additional 4-Wire 64Kbps Digital Grade Loop in same DS1 Interoffice Transport Combination - Zone 2		2	UNCDX	UDL64	34.55	126.53	88.85	60.68	14.64						
		Additional 4-Wire 64Kbps Digital Grade Loop in same DS1 Interoffice Transport Combination - Zone 3		3	UNCDX	UDL64	40.76	126.53	88.85	60.68	14.64						
		Additional 4-Wire 64Kbps Digital Grade Loop in same DS1 Interoffice Transport Combination - Zone 4		4	UNCDX	UDL64	32.25	126.53	88.85	60.68	14.64						
		Additional OCU-DP COCI (data) - DS1 to DS0 Channel System combination - per month (2.4-64kbs)			UNCDX	1D1DD	1.22	6.62	4.74	0.00	0.00						
		Each Additional DS1 Interoffice Channel per mile in same 3/1 Channel System per month			UNC1X	1L5XX	0.1813										
		Each Additional DS1 Interoffice Channel Facility Termination in same 3/1 Channel System per month			UNC1X	U1TF1	51.72	89.79	82.28	16.86	14.90						
		Each Additional DS1 COCI in the same 3/1 channel system combination per month			UNC1X	UC1D1	2.62	6.62	4.74	0.00	0.00						
		Nonrecurring Currently Combined Network Elements Switch -As-Is Charge			UNC1X	UNCCC		5.63	5.63	7.20	7.20						
	EXTENDED 2-WIRE ISDN LOOP WITH DS1 INTEROFFICE TRANSPORT w/ 3/1 MUX																

UNBUNDLED NETWORK ELEMENTS - Mississippi														Attachment: 2		Exhibit: A	
CATEGORY		RATE ELEMENTS	Interim	Zone	BCS	USOC	RATES ($)					Svc Order Submitted Elec per LSR	Svc Order Submitted Manually per LSR	Incremental Charge - Manual Svc Order vs. Electronic-1st	Incremental Charge - Manual Svc Order vs. Electronic-Add'l	Incremental Charge - Manual Svc Order vs. Electronic-Disc 1st	Incremental Charge - Manual Svc Order vs. Electronic-Disc Add'l
							Rec	Nonrecurring		Nonrecurring Disconnect		OSS Rates ($)					
								First	Add'l	First	Add'l	SOMEC	SOMAN	SOMAN	SOMAN	SOMAN	SOMAN
		First 2-Wire ISDN Loop in a DS1 Interoffice Combination Transport - Zone 1		1	UNCNX	U1L2X	21.01	117.61	79.92	52.82	10.37						
		First 2-Wire ISDN Loop in a DS1 Interoffice Combination Transport - Zone 2		2	UNCNX	U1L2X	27.59	117.61	79.92	52.82	10.37						
		First 2-Wire ISDN Loop in a DS1 Interoffice Combination Transport - Zone 3		3	UNCNX	U1L2X	37.34	117.61	79.92	52.82	10.37						
		First 2-Wire ISDN Loop in a DS1 Interoffice Combination Transport - Zone 4		4	UNCNX	U1L2X	59.18	117.61	79.92	52.82	10.37						
		First Interoffice Transport - Dedicated - DS1 combination - Per Mile per month			UNC1X	1L5XX	0.1813										
		First Interoffice Transport - Dedicated - DS1 combination - Facility Termination per month			UNC1X	U1TF1	51.72	89.79	82.28	16.86	14.90						
		Per each Channel System 1/0 in combination - per month			UNC1X	MQ1	102.85	91.57	62.94	10.87	10.10						
		Per each 2-wire ISDN COCI (BRITE) in combination - per month			UNCNX	UC1CA	2.62	6.62	4.74	0.00	0.00						
		3/1 Channel System in combination per month			UNC3X	MQ3	170.63	179.17	94.52	34.30	32.82						
		Per each DS1 COCI in combination per month			UNC1X	UC1D1	2.62	6.62	4.74	0.00	0.00						
		Additional 2-wire ISDN Loop in same DS1Interoffice Transport Combination - Zone 1		1	UNCNX	U1L2X	21.01	117.61	79.92	52.82	10.37						
		Additional 2-wire ISDN Loop in same DS1Interoffice Transport Combination - Zone 2		2	UNCNX	U1L2X	27.59	117.61	79.92	52.82	10.37						
		Additional 2-wire ISDN Loop in same DS1Interoffice Transport Combination - Zone 3		3	UNCNX	U1L2X	37.34	117.61	79.92	52.82	10.37						
		Additional 2-wire ISDN Loop in same DS1Interoffice Transport Combination - Zone 4		4	UNCNX	U1L2X	59.18	117.61	79.92	52.82	10.37						
		Additional 2-wire ISDN COCI (BRITE) in same 1/0 channel system combination- per month			UNCNX	UC1CA	2.62	6.62	4.74	0.00	0.00						
		Each Additional DS1 Interoffice Channel per mile in same 3/1 Channel System per month			UNC1X	1L5XX	0.1813										
		Each Additional DS1 Interoffice Channel Facility Termination in same 3/1 Channel System per month			UNC1X	U1TF1	51.72	89.79	82.28	16.86	14.90						
		Each Additional DS1 COCI in the same 3/1 channel system combination per month			UNC1X	UC1D1	2.62	6.62	4.74	0.00	0.00						
		Nonrecurring Currently Combined Network Elements Switch -As-Is Charge			UNC1X	UNCCC		5.63	5.63	7.20	7.20						
	EXTENDED 4-WIRE DS1 LOOP WITH DEDICATED DS1 INTEROFFICE TRANSPORT w/ 3/1 MUX																
		First 4-wire DS1 Digital Lcoal Loop in Combination - Zone 1		1	UNC1X	USLXX	79.08	253.93	158.45	46.10	12.07						
		First 4-wire DS1 Digital Lcoal Loop in Combination - Zone 2		2	UNC1X	USLXX	129.38	253.93	158.45	46.10	12.07						
		First 4-wire DS1 Digital Lcoal Loop in Combination - Zone 3		3	UNC1X	USLXX	206.74	253.93	158.45	46.10	12.07						
		First 4-wire DS1 Digital Lcoal Loop in Combination - Zone 4		4	UNC1X	USLXX	458.46	253.93	158.45	46.10	12.07						
		First Interoffice Transport - Dedicated - DS1 combination - Per Mile Per Month			UNC1X	1L5XX	0.1813										
		First Interoffice Transport - Dedicated - DS1 combination - Facility Termination Per Month			UNC1X	U1TF1	51.72	89.79	82.28	16.86	14.90						
		3/1 Channel System in combination per month			UNC3X	MQ3	170.63	179.17	94.52	34.30	32.82						
		Per each DS1 COCI combination per month			UNC1X	UC1D1	2.62	6.62	4.74	0.00	0.00						
		Each Additional DS1 Interoffice Channel per mile in same 3/1 Channel System per month			UNC1X	1L5XX	0.1813										
		Each Additional DS1 Interoffice Channel Facility Termination in same 3/1 Channel System per month			UNC1X	U1TF1	51.72	89.79	82.28	16.86	14.90						
		Each Additional DS1 COCI in the same 3/1 channel system combination per month			UNC1X	UC1D1	2.62	6.62	4.74	0.00	0.00						
		Additional 4-Wire DS1 Digital Local Loop in Combination - Zone 1		1	UNC1X	USLXX	79.08	253.93	158.45	46.10	12.07						
		Additional 4-Wire DS1 Digital Local Loop in Combination - Zone 2		2	UNC1X	USLXX	129.38	253.93	158.45	46.10	12.07						
		Additional 4-Wire DS1 Digital Local Loop in Combination - Zone 3		3	UNC1X	USLXX	206.74	253.93	158.45	46.10	12.07						

UNBUNDLED NETWORK ELEMENTS - Mississippi														Attachment: 2		Exhibit: A	
CATEGORY		RATE ELEMENTS	Interim	Zone	BCS	USOC	RATES ($)					Svc Order Submitted Elec per LSR	Svc Order Submitted Manually per LSR	Incremental Charge - Manual Svc Order vs. Electronic-1st	Incremental Charge - Manual Svc Order vs. Electronic-Add'l	Incremental Charge - Manual Svc Order vs. Electronic-Disc 1st	Incremental Charge - Manual Svc Order vs. Electronic-Disc Add'l
							Rec	Nonrecurring		Nonrecurring Disconnect		OSS Rates ($)					
								First	Add'l	First	Add'l	SOMEC	SOMAN	SOMAN	SOMAN	SOMAN	SOMAN
		Additional 4-Wire DS1 Digital Local Loop in Combination - Zone 4		4	UNC1X	USLXX	458.46	253.93	158.45	46.10	12.07						
		Nonrecurring Currently Combined Network Elements Switch -As-Is Charge			UNC1X	UNCCC		5.63	5.63	7.20	7.20						
	EXTENDED 4-WIRE 56 KBPS DIGITAL EXTENDED LOOP WITH DS0 INTEROFFICE TRANSPORT																
		First 4-wire 56 kbps Local Loop in combination - Zone 1		1	UNCDX	UDL56	27.44	126.53	88.85	60.68	14.64						
		First 4-wire 56 kbps Local Loop in combination - Zone 2		2	UNCDX	UDL56	34.55	126.53	88.85	60.68	14.64						
		First 4-wire 56 kbps Local Loop in combination - Zone 3		3	UNCDX	UDL56	40.76	126.53	88.85	60.68	14.64						
		First 4-wire 56 kbps Local Loop in combination - Zone 4		4	UNCDX	UDL56	32.25	126.53	88.85	60.68	14.64						
		First 4-wiree 56 kbps Interoffice Transport - Dedicated - Per Mile per month			UNCDX	1L5XX	0.0098										
		First 4-wire 56 kbps Interoffice Transport - Dedicated - Facility Termination per month			UNCDX	U1TD5	22.52	40.78	27.57	17.26	7.11						
		Nonrecurring Currently Combined Network Elements Switch -As-Is Charge			UNCDX	UNCCC		5.63	5.63	7.20	7.20						
	EXTENDED 4-WIRE 64 KBPS DIGITAL EXTENDED LOOP WITH DS0 INTEROFFICE TRANSPORT																
		First 4-wire 64 kbps Local Loop in combination - Zone 1		1	UNCDX	UDL64	27.44	126.53	88.85	60.68	14.64						
		First 4-wire 64 kbps Local Loop in combination - Zone 2		2	UNCDX	UDL64	34.55	126.53	88.85	60.68	14.64						
		First 4-wire 64 kbps Local Loop in combination - Zone 3		3	UNCDX	UDL64	40.76	126.53	88.85	60.68	14.64						
		First 4-wire 64 kbps Local Loop in combination - Zone 4		4	UNCDX	UDL64	32.25	126.53	88.85	60.68	14.64						
		First l4-wire 65 kbps Interoffice Transport - Dedicated - Per Mile per month			UNCDX	1L5XX	0.0098										
		First 4-wire 64 kbps Interoffice Transport - Dedicated - Facility Termination per month			UNCDX	U1TD6	22.52	40.78	27.57	17.26	7.11						
		Nonrecurring Currently Combined Network Elements Switch -As-Is Charge			UNCDX	UNCCC		5.63	5.63	7.20	7.20						
ADDITIONAL NETWORK ELEMENTS																	
	When used as a part of a currently combined facility, the non-recurrng charges do not apply, but a Switch As Is charge does apply.																
	When used as ordinarily combined network elements in All States, the non-recurring charges apply and the Switch As Is Charge does not.																
	Nonrecurring Currently Combined Network Elements "Switch As Is" Charge (One applies to each combination)																
		Nonrecurring Currently Combined Network Elements Switch -As-Is Charge - 2 wire/4-Wire VG			UNCVX	UNCCC		5.63	5.63	7.20	7.20						
		Nonrecurring Currently Combined Network Elements Switch -As-Is Charge - 56/64 kbps			UNCDX	UNCCC		5.63	5.63	7.20	7.20						
	MULTIPLEXERS																
		DS1 to DS0 Channel System per month			UNC1X	MQ1	102.85	91.57	62.94	10.87	10.10						
		OCU-DP COCI (data) - DS1 to DS0 Channel System - per month (2.4-64kbs) used for a Local Loop			UDL	1D1DD	1.22	6.62	4.74								
		OCU-DP COCI (data) - DS1 to DS0 Channel System - per month (2.4-64kbs) used for connection to a channelized DS1 Local Channel in the same SWC as collocation			U1TUD	1D1DD	1.22	6.62	4.74								
		2-wire ISDN COCI (BRITE) - DS1 to DS0 Channel Systsem - per month for a Local Loop			UDN	UC1CA	2.62	6.62	4.74								
		2-wire ISDN COCI (BRITE) - DS1 to DS0 Channel Systsem - per month used for connection to a channelized DS1 Local Channel in the same SWC as collocation			U1TUB	UC1CA	2.62	6.62	4.74								
		Voice Grade COCI - DS1 to DS0 Channel System - per month used for a Local Loop			UEA	1D1VG	0.5737	6.62	4.74								
		Voice Grade COCI - DS1 to DS0 Channel System - per month used for connection to a channelized DS1 Local Channel in the same SWC as collocation			U1TUC	1D1VG	0.5737	6.62	4.74								
		DS3 to DS1 Channel System per month			UNC3X	MQ3	170.63	179.17	94.52	34.30	32.82						
		STS-1 to DS1 Channel System per month			UNCSX	MQ3	170.63	179.17	94.52	34.30	32.82						
		DS1 COCI used with Loop per month			USL	UC1D1	12.96	6.62	4.74								
		DS1 COCI (used for connection to a channelized DS1 Local Channel in the same SWC as collocation) per month			U1TUA	UC1D1	12.96	6.62	4.74								
		DS1 COCI used with Interoffice Channel per month			U1TD1	UC1D1	12.96	6.62	4.74								
		DS3 Interface Unit (DS1 COCI) used with Local Channel per month			ULDD1	UC1D1	12.96	6.62	4.74								

UNBUNDLED NETWORK ELEMENTS - North Carolina														Attachment: 2		Exhibit: A	
CATEGORY	RATE ELEMENTS	Interim	Zone	BCS	USOC	RATES ($)					Svc Order Submitted Elec per LSR	Svc Order Submitted Manually per LSR	Incremental Charge - Manual Svc Order vs. Electronic-1st	Incremental Charge - Manual Svc Order vs. Electronic-Add'l	Incremental Charge - Manual Svc Order vs. Electronic-Disc 1st	Incremental Charge - Manual Svc Order vs. Electronic-Disc Add'l
						Rec	Nonrecurring		Nonrecurring Disconnect		OSS Rates ($)					
							First	Add'l	First	Add'l	SOMEC	SOMAN	SOMAN	SOMAN	SOMAN	SOMAN
	The "Zone" shown in the sections for stand-alone loops or loops as part of a combination refers to Geographically Deaveraged UNE Zones. To view Geographically Deaveraged UNE Zone Designations by Central Office, refer to internet Website: http://www.interconnection.bellsouth.com/become_a_clec/html/interconnection.htm															
OPERATIONAL SUPPORT SYSTEMS (OSS) - "REGIONAL RATES"																
	NOTE: (1) CLEC should contact its contract negotiator if it prefers the "state specific" OSS charges as ordered by the State Commissions. The OSS charges currently contained in this rate exhibit are the BellSouth "regional" service ordering charges. CLEC may elect either the state specific Commission ordered rates for the service ordering charges, or CLEC may elect the regional service ordering charge, however, CLEC can not obtain a mixture of the two regardless if CLEC has a interconnection contract established in each of the 9 states.															
	NOTE: (2) Any element that can be ordered electronically will be billed according to the SOMEC rate listed in this category. Please refer to BellSouth's Local Ordering Handbook (LOH) to determine if a product can be ordered electronically. For those elements that cannot be ordered electronically at present per the LOH, the listed SOMEC rate in this category reflects the charge that would be billed to a CLEC once electronic ordering capabilities come on-line for that element. Otherwise, the manual ordering charge, SOMAN, will be applied to a CLECs bill when it submits an LSR to BellSouth.															
	NOTE: (3) OSS - Manual Service Order Charge, Per Element - UNE Only **Please see applicable rate element for SOMAN charge**															
	OSS - Electronic Service Order Charge, Per Local Service Request (LSR) - UNE Only				SOMEC		3.50	0.00	3.50	0.00						
UNE SERVICE DATE ADVANCEMENT CHARGE																
	NOTE: The Expedite charge will be maintained commensurate with BellSouth's FCC No.1 Tariff, Section 5 as applicable.															
	UNE Expedite Charge per Circuit or Line Assignable USOC, per Day			UAL, UEANL, UCL, UEF, UDF, UEQ, UDL, UENTW, UDN, UEA, UHL, ULC, USL, U1T12, U1T48, U1TD1, U1TD3, U1TDX, U1TO3, U1TS1, U1TVX, UC1BC, UC1BL, UC1CC, UC1CL, UC1DC, UC1DL, UC1EC, UC1EL, UC1FC, UC1FL, UC1GC, UC1GL, UC1HC, UC1HL, UDL12, UDL48, UDLO3, UDLSX, UE3, ULD12, ULD48, ULDD1, ULDD3, ULDDX, ULDO3, ULDS1, ULDVX, UNC1X, UNC3X, UNCDX, UNCNX, UNCSX, UNCVX, UNLD1, UNLD3, UXTD1, UXTD3, UXTS1, U1TUC, U1TUD, U1TUB, U1TUA	SDASP		200.00									
UNBUNDLED EXCHANGE ACCESS LOOP																
	2-WIRE ANALOG VOICE GRADE LOOP															
	2-Wire Analog Voice Grade Loop - Service Level 1- Zone 1		1	UEANL	UEAL2	12.11	57.99	42.37					26.94	12.76	0.00	0.00
	2-Wire Analog Voice Grade Loop - Service Level 1- Zone 2		2	UEANL	UEAL2	21.24	57.99	42.37					26.94	12.76	0.00	0.00
	2-Wire Analog Voice Grade Loop - Service Level 1- Zone 3		3	UEANL	UEAL2	33.65	57.99	42.37					26.94	12.76	0.00	0.00
	2-Wire Analog Voice Grade Loop - Service Level 1- Zone 1		1	UEANL	UEASL	12.11	57.99	42.37					26.94	12.76	0.00	0.00
	2-Wire Analog Voice Grade Loop - Service Level 1- Zone 2		2	UEANL	UEASL	21.24	57.99	42.37					26.94	12.76	0.00	0.00
	2-Wire Analog Voice Grade Loop - Service Level 1- Zone 3		3	UEANL	UEASL	33.65	57.99	42.37					26.94	12.76	0.00	0.00
	Unbundled Miscellaneous Rate Element, Tag Loop at End User Premise			UEANL	URETL		8.33	0.83					26.94	12.76	0.00	0.00
	Loop Testing - Basic 1st Half Hour			UEANL	URET1		76.24	76.24					26.94	12.76	0.00	0.00
	Loop Testing - Basic Additional Half Hour			UEANL	URETA		39.51	39.51					26.94	12.76	0.00	0.00
	CLEC to CLEC Conversion Charge Without Outside Dispatch (UVL-SL1)			UEANL	UREWO		15.76	8.93					26.94	12.76	0.00	0.00

UNBUNDLED NETWORK ELEMENTS - North Carolina														Attachment: 2		Exhibit: A	
CATEGORY		RATE ELEMENTS	Interim	Zone	BCS	USOC	RATES ($)					Svc Order Submitted Elec per LSR	Svc Order Submitted Manually per LSR	Incremental Charge - Manual Svc Order vs. Electronic-1st	Incremental Charge - Manual Svc Order vs. Electronic-Add'l	Incremental Charge - Manual Svc Order vs. Electronic-Disc 1st	Incremental Charge - Manual Svc Order vs. Electronic-Disc Add'l
							Rec	Nonrecurring		Nonrecurring Disconnect		OSS Rates ($)					
								First	Add'l	First	Add'l	SOMEC	SOMAN	SOMAN	SOMAN	SOMAN	SOMAN
		Unbundled Voice Loop, Non-Design Voice Loop, billing for BST providing make-up (Engineering Information - E.I.)			UEANL	UEANM		28.74	28.74								
		Manual Order Coordination for UVL-SL1s (per loop)			UEANL	UEAMC		61.38	61.38								
		Order Coordination for Specified Conversion Time for UVL-SL1 (per LSR)			UEANL	OCOSL		45.34	45.34								
	2-WIRE Unbundled COPPER LOOP																
		2-Wire Unbundled Copper Loop - Non-Designed Zone 1		1	UEQ	UEQ2X	10.16	35.27	15.60					26.94	12.76	0.00	0.00
		2 Wire Unbundled Copper Loop - Non-Designed - Zone 2		2	UEQ	UEQ2X	17.55	35.27	15.60					26.94	12.76	0.00	0.00
		2 Wire Unbundled Copper Loop - Non-Designed - Zone 3		3	UEQ	UEQ2X	27.58	35.27	15.60					26.94	12.76	0.00	0.00
		Unbundled Miscellaneous Rate Element, Tag Loop at End User Premise			UEQ	URETL		8.33	0.83					26.94	12.76	0.00	0.00
		Manual Order Coordination 2 Wire Unbundled Copper Loop - Non-Designed (per loop)			UEQ	USBMC		61.38	61.38								
		Unbundled Copper Loop, Non-Design Copper Loop, billing for BST providing make-up (Engineering Information - E.I.)			UEQ	UEQMU		28.74	28.74					26.94	12.76	0.00	0.00
		Loop Testing - Basic 1st Half Hour			UEQ	URET1		76.24	76.24					26.94	12.76	0.00	0.00
		Loop Testing - Basic Additional Half Hour			UEQ	URETA		39.51	39.51					26.94	12.76	0.00	0.00
		CLEC to CLEC Conversion Charge Without Outside Dispatch (UCL-ND)			UEQ	UREWO		14.26	7.42					26.94	12.76	0.00	0.00
UNBUNDLED EXCHANGE ACCESS LOOP																	
	2-WIRE ANALOG VOICE GRADE LOOP																
		2-Wire Analog Voice Grade Loop - Service Level 2 w/Loop or Ground Start Signaling - Zone 1		1	UEA	UEAL2	14.97	142.97	106.56					26.94	12.76	0.00	0.00
		2-Wire Analog Voice Grade Loop - Service Level 2 w/Loop or Ground Start Signaling - Zone 2		2	UEA	UEAL2	25.93	142.97	106.56					26.94	12.76	0.00	0.00
		2-Wire Analog Voice Grade Loop - Service Level 2 w/Loop or Ground Start Signaling - Zone 3		3	UEA	UEAL2	40.81	142.97	106.56					26.94	12.76	0.00	0.00
		Order Coordination for Specified Conversion Time (per LSR)			UEA	OCOSL		45.34									
		2-Wire Analog Voice Grade Loop - Service Level 2 w/Reverse Battery Signaling - Zone 1		1	UEA	UEAR2	14.97	142.97	106.56					26.94	12.76	0.00	0.00
		2-Wire Analog Voice Grade Loop - Service Level 2 w/Reverse Battery Signaling - Zone 2		2	UEA	UEAR2	25.93	142.97	106.56					26.94	12.76	0.00	0.00
		2-Wire Analog Voice Grade Loop - Service Level 2 w/Reverse Battery Signaling - Zone 3		3	UEA	UEAR2	40.81	142.97	106.56					26.94	12.76	0.00	0.00
		Order Coordination for Specified Conversion Time (per LSR)			UEA	OCOSL		45.34									
		CLEC to CLEC Conversion Charge without outside dispatch			UEA	UREWO		87.64	36.33					26.94	12.76	0.00	0.00
		Loop Tagging - Service Level 2 (SL2)			UEA	URETL		11.20	1.10					26.94	12.76	0.00	0.00
	4-WIRE ANALOG VOICE GRADE LOOP																
		4-Wire Analog Voice Grade Loop - Zone 1		1	UEA	UEAL4	21.32	288.47	237.45					26.94	12.76	0.00	0.00
		4-Wire Analog Voice Grade Loop - Zone 2		2	UEA	UEAL4	36.27	288.47	237.45					26.94	12.76	0.00	0.00
		4-Wire Analog Voice Grade Loop - Zone 3		3	UEA	UEAL4	56.57	288.47	237.45					26.94	12.76	0.00	0.00
		Order Coordination for Specified Conversion Time (per LSR)			UEA	OCOSL		45.34									
		CLEC to CLEC Conversion Charge without outside dispatch			UEA	UREWO		87.64	36.33					26.94	12.76	0.00	0.00
	2-WIRE ISDN DIGITAL GRADE LOOP																
		2-Wire ISDN Digital Grade Loop - Zone 1		1	UDN	U1L2X	19.42	325.91	251.31					26.94	12.76	0.00	0.00
		2-Wire ISDN Digital Grade Loop - Zone 2		2	UDN	U1L2X	32.88	325.91	251.31					26.94	12.76	0.00	0.00
		2-Wire ISDN Digital Grade Loop - Zone 3		3	UDN	U1L2X	51.14	325.91	251.31					26.94	12.76	0.00	0.00
		Order Coordination For Specified Conversion Time (per LSR)			UDN	OCOSL		45.34									
		CLEC to CLEC Conversion Charge without outside dispatch			UDN	UREWO		91.55	44.12					26.94	12.76	0.00	0.00
	2-WIRE ASYMMETRICAL DIGITAL SUBSCRIBER LINE (ADSL) COMPATIBLE LOOP																
		2 Wire Unbundled ADSL Loop including manual service inquiry & facility reservation - Zone 1		1	UAL	UAL2X	11.00	264.71	145.60					26.94	12.76	0.00	0.00
		2 Wire Unbundled ADSL Loop including manual service inquiry & facility reservation - Zone 2		2	UAL	UAL2X	18.39	264.71	145.60					26.94	12.76	0.00	0.00
		2 Wire Unbundled ADSL Loop including manual service inquiry & facility reservation - Zone 3		3	UAL	UAL2X	28.42	264.71	145.60					26.94	12.76	0.00	0.00
		Order Coordination for Specified Conversion Time (per LSR)			UAL	OCOSL		45.34									
		2 Wire Unbundled ADSL Loop without manual service inquiry & facility reservaton - Zone 1		1	UAL	UAL2W	11.00	190.25	114.82					26.94	12.76	0.00	0.00

UNBUNDLED NETWORK ELEMENTS - North Carolina														Attachment: 2		Exhibit: A	
CATEGORY		RATE ELEMENTS	Interim	Zone	BCS	USOC	RATES ($)					Svc Order Submitted Elec per LSR	Svc Order Submitted Manually per LSR	Incremental Charge - Manual Svc Order vs. Electronic-1st	Incremental Charge - Manual Svc Order vs. Electronic-Add'l	Incremental Charge - Manual Svc Order vs. Electronic-Disc 1st	Incremental Charge - Manual Svc Order vs. Electronic-Disc Add'l
							Rec	Nonrecurring		Nonrecurring Disconnect		OSS Rates ($)					
								First	Add'l	First	Add'l	SOMEC	SOMAN	SOMAN	SOMAN	SOMAN	SOMAN
		2 Wire Unbundled ADSL Loop without manual service inquiry & facility reservaton - Zone 2		2	UAL	UAL2W	18.39	190.25	114.82					26.94	12.76	0.00	0.00
		2 Wire Unbundled ADSL Loop without manual service inquiry & facility reservaton - Zone 3		3	UAL	UAL2W	28.42	190.25	114.82					26.94	12.76	0.00	0.00
		Order Coordination for Specified Conversion Time (per LSR)			UAL	OCOSL		45.34									
		CLEC to CLEC Conversion Charge without outside dispatch			UAL	UREWO		86.12	40.36					26.94	12.76	0.00	0.00
	2-WIRE HIGH BIT RATE DIGITAL SUBSCRIBER LINE (HDSL) COMPATIBLE LOOP																
		2 Wire Unbundled HDSL Loop including manual service inquiry & facility reservation - Zone 1		1	UHL	UHL2X	9.01	284.74	163.54					26.94	12.76	0.00	0.00
		2 Wire Unbundled HDSL Loop including manual service inquiry & facility reservation - Zone 2		2	UHL	UHL2X	14.87	284.74	163.54					26.94	12.76	0.00	0.00
		2 Wire Unbundled HDSL Loop including manual service inquiry & facility reservation - Zone 3		3	UHL	UHL2X	22.82	284.74	163.54					26.94	12.76	0.00	0.00
		Order Coordination for Specified Conversion Time (per LSR)			UHL	OCOSL		45.34									
		2 Wire Unbundled HDSL Loop without manual service inquiry and facility reservation - Zone 1		1	UHL	UHL2W	9.01	207.48	132.05					26.94	12.76	0.00	0.00
		2 Wire Unbundled HDSL Loop without manual service inquiry and facility reservation - Zone 2		2	UHL	UHL2W	14.87	207.48	132.05					26.94	12.76	0.00	0.00
		2 Wire Unbundled HDSL Loop without manual service inquiry and facility reservation - Zone 3		3	UHL	UHL2W	22.82	207.48	132.05					26.94	12.76	0.00	0.00
		Order Coordination for Specified Conversion Time (per LSR)			UHL	OCOSL		45.34									
		CLEC to CLEC Conversion Charge without outside dispatch			UHL	UREWO		86.06	40.36					26.94	12.76	0.00	0.00
	4-WIRE HIGH BIT RATE DIGITAL SUBSCRIBER LINE (HDSL) COMPATIBLE LOOP																
		4 Wire Unbundled HDSL Loop including manual service inquiry and facility reservation - Zone 1		1	UHL	UHL4X	10.62	341.65	220.45					26.94	12.76	0.00	0.00
		4-Wire Unbundled HDSL Loop including manual service inquiry and facility reservation - Zone 2		2	UHL	UHL4X	17.67	341.65	220.45					26.94	12.76	0.00	0.00
		4-Wire Unbundled HDSL Loop including manual service inquiry and facility reservation - Zone 3		3	UHL	UHL4X	27.24	341.65	220.45					26.94	12.76	0.00	0.00
		Order Coordination for Specified Conversion Time (per LSR)			UHL	OCOSL		45.34									
		4-Wire Unbundled HDSL Loop without manual service inquiry and facility reservation - Zone 1		1	UHL	UHL4W	10.62	264.39	188.96					26.94	12.76	0.00	0.00
		4-Wire Unbundled HDSL Loop without manual service inquiry and facility reservation - Zone 2		2	UHL	UHL4W	17.67	264.39	188.96					26.94	12.76	0.00	0.00
		4-Wire Unbundled HDSL Loop without manual service inquiry and facility reservation - Zone 3		3	UHL	UHL4W	27.24	264.39	188.96					26.94	12.76	0.00	0.00
		Order Coordination for Specified Conversion Time (per LSR)			UHL	OCOSL		45.34									
		CLEC to CLEC Conversion Charge without outside dispatch			UHL	UREWO		86.06	40.36					26.94	12.76	0.00	0.00
	4-WIRE DS1 DIGITAL LOOP																
		4-Wire DS1 Digital Loop - Zone 1		1	USL, NTCD1	USLXX	47.60	714.84	421.47					42.19	12.76	0.00	0.00
		4-Wire DS1 Digital Loop - Zone 2		2	USL, NTCD1	USLXX	84.36	714.84	421.47					42.19	12.76	0.00	0.00
		4-Wire DS1 Digital Loop - Zone 3		3	USL, NTCD1	USLXX	134.29	714.84	421.47					42.19	12.76	0.00	0.00
		Order Coordination for Specified Conversion Time (per LSR)			USL, NTCD1	OCOSL		48.31									
		CLEC to CLEC Conversion Charge without outside dispatch			USL, NTCD1	UREWO		100.99	43.00					26.94	12.76	0.00	0.00
	4-WIRE 19.2, 56 OR 64 KBPS DIGITAL GRADE LOOP																
		4 Wire Unbundled Digital 19.2 Kbps		1	UDL	UDL19	25.32	489.04	337.51					26.94	12.76	0.00	0.00
		4 Wire Unbundled Digital 19.2 Kbps		2	UDL	UDL19	43.11	489.04	337.51					26.94	12.76	0.00	0.00
		4 Wire Unbundled Digital 19.2 Kbps		3	UDL	UDL19	67.26	489.04	337.51					26.94	12.76	0.00	0.00
		4 Wire Unbundled Digital Loop 56 Kbps - Zone 1		1	UDL	UDL56	25.32	489.04	337.51					26.94	12.76	0.00	0.00
		4 Wire Unbundled Digital Loop 56 Kbps - Zone 2		2	UDL	UDL56	43.11	489.04	337.51					26.94	12.76	0.00	0.00
		4 Wire Unbundled Digital Loop 56 Kbps - Zone 3		3	UDL	UDL56	67.26	489.04	337.51					26.94	12.76	0.00	0.00
		Order Coordination for Specified Conversion Time (per LSR)			UDL	OCOSL		45.34									
		4 Wire Unbundled Digital Loop 64 Kbps - Zone 1		1	UDL	UDL64	25.32	489.04	337.51					26.94	12.76	0.00	0.00
		4 Wire Unbundled Digital Loop 64 Kbps - Zone 2		2	UDL	UDL64	43.11	489.04	337.51					26.94	12.76	0.00	0.00
		4 Wire Unbundled Digital Loop 64 Kbps - Zone 3		3	UDL	UDL64	67.26	489.04	337.51					26.94	12.76	0.00	0.00
		Order Coordination for Specified Conversion Time (per LSR)			UDL	OCOSL		45.34									
		CLEC to CLEC Conversion Charge without outside dispatch			UDL	UREWO		102.03	49.70					26.94	12.76	0.00	0.00
	2-WIRE Unbundled COPPER LOOP																

UNBUNDLED NETWORK ELEMENTS - North Carolina														Attachment: 2		Exhibit: A	
CATEGORY		RATE ELEMENTS	Interim	Zone	BCS	USOC	RATES ($)					Svc Order Submitted Elec per LSR	Svc Order Submitted Manually per LSR	Incremental Charge - Manual Svc Order vs. Electronic-1st	Incremental Charge - Manual Svc Order vs. Electronic-Add'l	Incremental Charge - Manual Svc Order vs. Electronic-Disc 1st	Incremental Charge - Manual Svc Order vs. Electronic-Disc Add'l
							Rec	Nonrecurring		Nonrecurring Disconnect		OSS Rates ($)					
								First	Add'l	First	Add'l	SOMEC	SOMAN	SOMAN	SOMAN	SOMAN	SOMAN
		2-Wire Unbundled Copper Loop-Designed including manual service inquiry & facility reservation - Zone 1		1	UCL	UCLPB	13.26	262.86	143.75					26.94	12.76	0.00	0.00
		2-Wire Unbundled Copper Loop-Designed including manual service inquiry & facility reservation - Zone 2		2	UCL	UCLPB	22.39	262.86	143.75					26.94	12.76	0.00	0.00
		2 Wire Unbundled Copper Loop-Designed including manual service inquiry & facility reservation - Zone 3		3	UCL	UCLPB	34.80	262.86	143.75					26.94	12.76	0.00	0.00
		Order Coordination for Unbundled Copper Loops (per loop)			UCL	UCLMC		61.38	61.38								
		2-Wire Unbundled Copper Loop-Designed without manual service inquiry and facility reservation - Zone 1		1	UCL	UCLPW	13.26	188.39	112.96					26.94	12.76	0.00	0.00
		2-Wire Unbundled Copper Loop-Designed without manual service inquiry and facility reservation - Zone 2		2	UCL	UCLPW	22.39	188.39	112.96					26.94	12.76	0.00	0.00
		2-Wire Unbundled Copper Loop-Designed without manual service inquiry and facility reservation - Zone 3		3	UCL	UCLPW	34.80	188.39	112.96					26.94	12.76	0.00	0.00
		Order Coordination for Unbundled Copper Loops (per loop)			UCL	UCLMC		61.38	61.38								
		CLEC to CLEC Conversion Charge without outside dispatch (UCL-Des)			UCL	UREWO		97.14	42.44					26.94	12.76	0.00	0.00
	4-WIRE COPPER LOOP																
		4-Wire Copper Loop including manual service inquiry and facility reservation - Zone 1		1	UCL	UCL4S	17.36	311.03	191.93					26.94	12.76	0.00	0.00
		4-Wire Copper Loop including manual service inquiry and facility reservation - Zone 2		2	UCL	UCL4S	29.61	311.03	191.93					26.94	12.76	0.00	0.00
		4-Wire Copper Loop including manual service inquiry and facility reservation - Zone 3		3	UCL	UCL4S	46.26	311.03	191.93					26.94	12.76	0.00	0.00
		Order Coordination for Unbundled Copper Loops (per loop)			UCL	UCLMC		61.38	61.38								
		4-Wire Copper Loop without manual service inquiry and facility reservation - Zone 1		1	UCL	UCL4W	17.36	236.57	161.14					26.94	12.76	0.00	0.00
		4-Wire Copper Loop without manual service inquiry and facility reservation - Zone 2		2	UCL	UCL4W	29.61	236.57	161.14					26.94	12.76	0.00	0.00
		4-Wire Copper Loop without manual service inquiry and facility reservation - Zone 3		3	UCL	UCL4W	46.26	236.57	161.14					26.94	12.76	0.00	0.00
		Order Coordination for Unbundled Copper Loops (per loop)			UCL	UCLMC		61.38	61.38								
		CLEC to CLEC Conversion Charge without outside dispatch (UCL-Des)			UCL	UREWO		97.14	42.44								
LOOP MODIFICATION																	
		Unbundled Loop Modification, Removal of Load Coils - 2 Wire pair less than or equal to 18k ft, per Unbundled Loop			UAL, UHL, UCL, UEQ, ULS, UEA, UEANL, UEPSR, UEPSB	ULM2L		21.24	21.24					26.94	12.76	0.00	0.00
		Unbundled Loop Modification Removal of Load Coils - 4 Wire less than or equal to 18K ft, per Unbundled Loop			UHL, UCL, UEA	ULM4L		21.24	21.24					26.94	12.76	0.00	0.00
		Unbundled Loop Modification Removal of Bridged Tap Removal, per unbundled loop			UAL, UHL, UCL, UEQ, ULS, UEA, UEANL, UEPSR, UEPSB	ULMBT		24.84	24.84					26.94	12.76	0.00	0.00
SUB-LOOPS																	
	Sub-Loop Distribution																
		Sub-Loop - Per Cross Box Location - CLEC Feeder Facility Set-Up	I		UEANL	USBSA		373.57						26.94	12.76	0.00	0.00
		Sub-Loop - Per Cross Box Location - Per 25 Pair Panel Set-Up	I		UEANL	USBSB		33.78						26.94	12.76	0.00	0.00
		Sub-Loop - Per Building Equipment Room - CLEC Feeder Facility Set-Up	I		UEANL	USBSC		234.76						26.94	12.76	0.00	0.00
		Sub-Loop - Per Building Equipment Room - Per 25 Pair Panel Set-Up	I		UEANL	USBSD		81.05						26.94	12.76	0.00	0.00
		Sub-Loop Distribution Per 2-Wire Analog Voice Grade Loop - Zone 1	I	1	UEANL	USBN2	7.31	126.03	54.54					26.94	12.76	0.00	0.00
		Sub-Loop Distribution Per 2-Wire Analog Voice Grade Loop - Zone 2	I	2	UEANL	USBN2	11.93	126.03	54.54					26.94	12.76	0.00	0.00

UNBUNDLED NETWORK ELEMENTS - North Carolina														Attachment: 2		Exhibit: A	
CATEGORY		RATE ELEMENTS	Interim	Zone	BCS	USOC	RATES ($)					Svc Order Submitted Elec per LSR	Svc Order Submitted Manually per LSR	Incremental Charge - Manual Svc Order vs. Electronic-1st	Incremental Charge - Manual Svc Order vs. Electronic-Add'l	Incremental Charge - Manual Svc Order vs. Electronic-Disc 1st	Incremental Charge - Manual Svc Order vs. Electronic-Disc Add'l
							Rec	Nonrecurring		Nonrecurring Disconnect		OSS Rates ($)					
								First	Add'l	First	Add'l	SOMEC	SOMAN	SOMAN	SOMAN	SOMAN	SOMAN
		Sub-Loop Distribution Per 2-Wire Analog Voice Grade Loop - Zone 3	I	3	UEANL	USBN2	18.20	126.03	54.54					26.94	12.76	0.00	0.00
		Order Coordination for Unbundled Sub-Loops, per sub-loop pair			UEANL	USBMC		61.38	61.38								
		Sub-Loop Distribution Per 4-Wire Analog Voice Grade Loop - Zone 1		1	UEANL	USBN4	8.44	156.52	79.66					26.94	12.76	0.00	0.00
		Sub-Loop Distribution Per 4-Wire Analog Voice Grade Loop - Zone 2		2	UEANL	USBN4	13.81	156.52	79.66					26.94	12.76	0.00	0.00
		Sub-Loop Distribution Per 4-Wire Analog Voice Grade Loop - Zone 3		3	UEANL	USBN4	21.10	156.52	79.66					26.94	12.76	0.00	0.00
		Order Coordination for Unbundled Sub-Loops, per sub-loop pair			UEANL	USBMC		61.38	61.38								
		Sub-Loop 2-Wire Intrabuilding Network Cable (INC)	I		UEANL	USBR2	2.79	114.05	37.20					26.94	12.76	0.00	0.00
		Order Coordination for Unbundled Sub-Loops, per sub-loop pair			UEANL	USBMC		61.38	61.38								
		Sub-Loop 4-Wire Intrabuilding Network Cable (INC)	I		UEANL	USBR4	3.74	127.67	50.82					26.94	12.76	0.00	0.00
		Order Coordination for Unbundled Sub-Loops, per sub-loop pair			UEANL	USBMC		61.38	61.38								
		Loop Testing - Basic 1st Half Hour			UEANL	URET1		76.24	76.24								
		Loop Testing - Basic Additional Half Hour			UEANL	URETA		39.51	39.51								
		2 Wire Copper Unbundled Sub-Loop Distribution - Zone 1	I	1	UEF	UCS2X	6.10	137.10	60.24					26.94	12.76	0.00	0.00
		2 Wire Copper Unbundled Sub-Loop Distribution - Zone 2	I	2	UEF	UCS2X	9.70	137.10	60.24					26.94	12.76	0.00	0.00
		2 Wire Copper Unbundled Sub-Loop Distribution - Zone 3	I	3	UEF	UCS2X	14.59	137.10	60.24					26.94	12.76	0.00	0.00
		Order Coordination for Unbundled Sub-Loops, per sub-loop pair			UEF	USBMC		61.38	61.38								
		4 Wire Copper Unbundled Sub-Loop Distribution - Zone 1	I	1	UEF	UCS4X	6.58	162.24	85.38					26.94	12.76	0.00	0.00
		4 Wire Copper Unbundled Sub-Loop Distribution - Zone 2	I	2	UEF	UCS4X	10.51	162.24	85.38					26.94	12.76	0.00	0.00
		4 Wire Copper Unbundled Sub-Loop Distribution - Zone 3	I	3	UEF	UCS4X	15.84	162.24	85.38					26.94	12.76	0.00	0.00
		Order Coordination for Unbundled Sub-Loops, per sub-loop pair			UEF	USBMC		61.38	61.38								
		Loop Testing - Basic 1st Half Hour			UEF	URET1		76.24	76.24								
		Loop Testing - Basic Additional Half Hour			UEF	URETA		39.51	39.51								
	Unbundled Network Terminating Wire (UNTW)																
		Unbundled Network Terminating Wire (UNTW) per Pair			UENTW	UENPP	0.4351	64.98						26.94	12.76	0.00	0.00
	Network Interface Device (NID)																
		Network Interface Device (NID) - 1-2 lines	I		UENTW	UND12		86.37	56.69					26.94	12.76	0.00	0.00
		Network Interface Device (NID) - 1-6 lines	I		UENTW	UND16		127.93	98.21					26.94	12.76	0.00	0.00
		Network Interface Device Cross Connect - 2 W	I		UENTW	UNDC2		11.68	11.68					26.94	12.76	0.00	0.00
		Network Interface Device Cross Connect - 4W	I		UENTW	UNDC4		11.68	11.68					26.94	12.76	0.00	0.00
UNE OTHER, PROVISIONING ONLY - NO RATE																	
		NID - Dispatch and Service Order for NID installation			UENTW	UNDBX	0.00	0.00									
		UNTW Circuit Id Establishment, Provisioning Only - No Rate			UENTW	UENCE	0.00	0.00									
		Unbundled Contract Name, Provisioning Only - No Rate			UEANL,UEF,UEQ,UENTW	UNECN	0.00	0.00									
HIGH CAPACITY UNBUNDLED LOCAL LOOP																	
		High Capacity Unbundled Local Loop - DS3 - Per Mile per month			UE3	1L5ND	13.33										
		High Capacity Unbundled Local Loop - DS3 - Facility Termination per month			UE3	UE3PX	450.69	1,071.00	646.12					53.48	53.48		
		High Capacity Unbundled Local Loop - STS-1 - Per Mile per month			UDLSX	1L5ND	13.33										
		High Capacity Unbundled Local Loop - STS-1 - Facility Termination per month			UDLSX	UDLS1	464.26	1,071.00	646.12					53.48	53.48		
LOOP MAKE-UP																	
		Loop Makeup - Preordering Without Reservation, per working or spare facility queried (Manual).			UMK	UMKLW		55.44	55.44					19.99	19.99	19.99	19.99
		Loop Makeup - Preordering With Reservation, per spare facility queried (Manual).			UMK	UMKLP		55.73	55.73					19.99	19.99	19.99	19.99

UNBUNDLED NETWORK ELEMENTS - North Carolina														Attachment: 2		Exhibit: A	
CATEGORY		RATE ELEMENTS	Interim	Zone	BCS	USOC	RATES ($)					Svc Order Submitted Elec per LSR	Svc Order Submitted Manually per LSR	Incremental Charge - Manual Svc Order vs. Electronic-1st	Incremental Charge - Manual Svc Order vs. Electronic-Add'l	Incremental Charge - Manual Svc Order vs. Electronic-Disc 1st	Incremental Charge - Manual Svc Order vs. Electronic-Disc Add'l
							Rec	Nonrecurring		Nonrecurring Disconnect		OSS Rates ($)					
								First	Add'l	First	Add'l	SOMEC	SOMAN	SOMAN	SOMAN	SOMAN	SOMAN
		Loop Makeup--With or Without Reservation, per working or spare facility queried (Mechanized)			UMK	UMKMQ		0.6960821	0.6960821								
LINE SHARING AND LINE SPLITTING																	
	NOTE 1: The Line Sharing monthly recurring rates for all installations completed from October 02, 2003 through midnight October 01, 2004 shall be billed as follows:																
	NOTE 1: 10/02/2003 – 10/01/2004: 25% of the rate for an unbundled copper loop non-designed ("UCLND")																
	NOTE 1: 10/02/2004 – 10/01/2005: 50% of the rate for UCLND																
	NOTE 1: 10/02/2005 – 10/01/2006: 75% of the rate for UCLND																
	NOTE 1: Above will apply to USOCS: ULSDT and ULSCT																
	****NOTE 2: The Line Sharing monthly recurring rates with USOCs ULSDC and ULSCC applies only to circuits installed and inservice on or before October 1, 2003**																
	LINE SHARING																
	SPLITTERS-CENTRAL OFFICE BASED																
		Line Sharing Splitter, per System 96 Line Capacity			ULS	ULSDA	181.18	631.54	0.00					26.94	12.76		
		Line Sharing Splitter, per System 24 Line Capacity			ULS	ULSDB	38.99	631.54	0.00					26.94	12.76		
		Line Sharing Splitter, Per System, 8 Line Capacity			ULS	ULSD8	12.73	424.61	0.00					26.94	12.76		
		Line Sharing-DLEC Owned Splitter in CO-CFA activaton-deactivation (per LSOD)			ULS	ULSDG		146.32	31.27					26.94	12.76		
	END USER ORDERING-CENTRAL OFFICE BASED LINE SHARING																
		Line Sharing - per Line Activation (BST Owned splitter) - OBSOLETE see **NOTE 2			ULS	ULSDC	0.61	54.71	28.77					26.94	12.76		
		Line Share Service, TRO per line activation, BST owned splitter - Central Office Located (50% of UCLND) - please see NOTE 1 (E:10/2/2004)			ULS	ULSDT	6.99	54.71	28.77								
		Line Share Service, TRO per line activation, BST owned splitter - Central Office Located (75% of UCLND) - please see NOTE 1 (E:10/2/2005)			ULS	ULSDT	10.48	54.71	28.77								
		Line Sharing - per Subsequent Activity per Line Rearrangement(BST Owned Splitter			ULS	ULSDS		35.42	16.57					26.94	12.76		
		Line Sharing - per Subsequent Activity per Line Rearrangement(DLEC Owned Splitter			ULS	ULSCS		35.14	16.29					26.94	12.76		
		Line Sharing - per Line Activation (DLEC owned Splitter) - OBSOLETE see **NOTE 2			ULS	ULSCC	0.61	47.44	19.31					26.94	12.76		
		Line Share Service, TRO per line activation, CLEC owned splitter - Central Office Located (50% of UCLND) - please see NOTE 1 (E:10/2/2004)			ULS	ULSCT	6.99	47.44	19.31								
		Line Share Service, TRO per line activation, CLEC owned splitter - Central Office Located (75% of UCLND) - please see NOTE 1 (E:10/2/2005)			ULS	ULSCT	10.48	47.44	19.31								
	LINE SPLITTING																
	MAINTENANCE																
		No Trouble Found - per 1/2 hour increments - Basic						80.00	55.00								
		No Trouble Found - per 1/2 hour increments - Overtime						120.00	82.50								
		No Trouble Found - per 1/2 hour increments - Premium						160.00	110.00								
UNBUNDLED DEDICATED TRANSPORT																	
	INTEROFFICE CHANNEL - DEDICATED TRANSPORT																
		Interoffice Channel - Dedicated Transport - 2-Wire Voice Grade - Per Mile per month			U1TVX	1L5XX	0.0125										
		Interoffice Channel - Dedicated Transport- 2- Wire Voice Grade - Facility Termination			U1TVX	U1TV2	18.00	137.48	52.58					38.07	38.07		
		Interoffice Channel - Dedicated Transpor t- 2-Wire Voice Grade Rev Bat. - Per Mile per month			U1TVX	1L5XX	0.0125										
		Interoffice Channel - Dedicated Transport- 2- Wire VG Rev Bat. - Facility Termination			U1TVX	U1TR2	18.00	137.48	52.58					38.07	38.07		
		Interoffice Channel - Dedicated Transport - 4-Wire Voice Grade - Per Mile per month			U1TVX	1L5XX	0.0125										
		Interoffice Channel - Dedicated Transport - 4- Wire Voice Grade - Facility Termination			U1TVX	U1TV4	22.16	106.11	65.95					22.32	22.32		
		Interoffice Channel - Dedicated Transport - 56 kbps - per mile per month			U1TDX	1L5XX	0.0282										

UNBUNDLED NETWORK ELEMENTS - North Carolina														Attachment: 2		Exhibit: A	
CATEGORY		RATE ELEMENTS	Interim	Zone	BCS	USOC	RATES ($)					Svc Order Submitted Elec per LSR	Svc Order Submitted Manually per LSR	Incremental Charge - Manual Svc Order vs. Electronic-1st	Incremental Charge - Manual Svc Order vs. Electronic-Add'l	Incremental Charge - Manual Svc Order vs. Electronic-Disc 1st	Incremental Charge - Manual Svc Order vs. Electronic-Disc Add'l
							Rec	Nonrecurring		Nonrecurring Disconnect		OSS Rates ($)					
								First	Add'l	First	Add'l	SOMEC	SOMAN	SOMAN	SOMAN	SOMAN	SOMAN
		Interoffice Channel - Dedicated Transport - 56 kbps - Facility Termination			U1TDX	U1TD5	17.40	137.48	52.58					38.07	38.07		
		Interoffice Channel - Dedicated Transport - 64 kbps - per mile per month			U1TDX	1L5XX	0.0282										
		Interoffice Channel - Dedicated Transport - 64 kbps - Facility Termination			U1TDX	U1TD6	17.40	137.48	52.58					38.07	38.07		
		Interoffice Channel - Dedicated Channel - DS1 - Per Mile per month			U1TD1	1L5XX	0.5753										
		Interoffice Channel - Dedicated Tranport - DS1 - Facility Termination			U1TD1	U1TF1	71.29	217.17	163.75					38.07	38.07		
		Interoffice Channel - Dedicated Transport - DS3 - Per Mile per month			U1TD3	1L5XX	12.98										
		Interoffice Channel - Dedicated Transport - DS3 - Facility Termination per month			U1TD3	U1TF3	720.38	794.94	579.55					91.26	91.26		
		Interoffice Channel - Dedicated Transport - STS-1 - Per Mile per month			U1TS1	1L5XX	6.14										
		Interoffice Channel - Dedicated Transport - STS-1 - Facility Termination			U1TS1	U1TFS	790.37	642.23	408.89					53.48	53.48		
DARK FIBER																	
		Dark Fiber, Four Fiber Strands, Per Route Mile or Fraction Thereof per month - Interoffice Channel			UDF, UDFCX	1L5DF	27.71										
		NRC Dark Fiber - Interoffice Channel			UDF, UDFCX	UDF14		1,807.00	562.96								
		Dark Fiber, Four Fiber Strands, Per Route Mile or Fraction Thereof per month - Local Loop			UDF, UDFCX	1L5DL	64.04										
		NRC Dark Fiber - Local Loop			UDF, UDFCX	UDFL4		1,347.00	279.87								
SIGNALING (CCS7)																	
		CCS7 Signaling Connection, Per link (A link)			UDB	TPP6A	18.22	278.02	278.02					41.35	41.35		
		CCS7 Signaling Connection, Per link (B link) (also known as D link)			UDB	TPP6B	18.22	278.02	278.02					41.35	41.35		
		CCS7 Signaling Connection-A link, per month			UDB	TPP9A	18.22	278.02	278.02					41.35	41.35		
		CCS7 Signaling Connection-B link(also known as D link) per month			UDB	TPP9B	18.22	278.02	278.02					41.35	41.35		
		CCS7 Signaling Termination, Per STP Port			UDB	PT8SX	132.83										
		CCS7 Signaling Usage Surrogate, per link per LATA			UDB	STU56	338.98										
		CCS7 Signaling Point Code, per Originating Point Code Establishment or Change, per STP affected			UDB	CCAPO		40.00	40.00					19.99	19.99		
		CCS7 Signaling Point Code, per Destination Point Code Establishment or Change, Per Stp Affected			UDB	CCAPD		8.00	8.00					19.99	19.99		
E911 SERVICE																	
		Local Channel - Dedicated - 2-wr Voice Grade - Zone 1					11.24	553.80	89.69					42.17	12.76		
		Local Channel - Dedicated - 2-wr Voice Grade - Zone 2					19.91	553.80	89.69					42.17	12.76		
		Local Channel - Dedicated - 2-wr Voice Grade - Zone 3					31.70	553.80	89.69					42.17	12.76		
		Interoffice Transport - Dedicated - 2-wr Voice Grade Per Mile					0.0282										
		Interoffice Transport - Dedicated - 2-wr Voice Grade Per Facility Termination					18.00	137.48	52.58					38.07	38.07		
		Local Channel - Dedicated - DS1 - Zone 1					27.05	534.48	462.69					86.15	1.77		
		Local Channel - Dedicated - DS1 - Zone 2					47.94	534.48	462.69					86.15	1.77		
		Local Channel - Dedicated - DS1 - Zone 3					76.32	534.48	462.69					86.15	1.77		
		Interoffice Transport - Dedicated - DS1 Per Mile					0.5753										
		Interoffice Transport - Dedicated - DS1 Per Facility Termination					71.29	217.17	163.75					38.07	38.07		
ENHANCED EXTENDED LINK (EELs)																	
	NOTE: The monthly recurring and non-recurring charges below will apply and the Switch-As-Is Charge will not apply for UNE combinations provisioned as ' Ordinarily Combined' Network Elements.																
	NOTE: The monthly recurring and the Switch-As-Is Charge and not the non-recurring charges below will apply for UNE combinations provisioned as ' Currently Combined' Network Elements.																
	EXTENTED 2-WIRE VOICE GRADE EXTENDED LOOP WITH DEDICATED DS1 INTEROFFICE TRANSPORT																
		First 2-Wire VG Loop (SL2) in Combination - Zone 1		1	UNCVX	UEAL2	14.97	142.97	106.56					38.07	38.07		
		First 2-Wire VG Loop (SL2) in Combination - Zone 2		2	UNCVX	UEAL2	25.93	142.97	106.56					38.07	38.07		
		First 2-Wire VG Loop (SL2) in Combination - Zone 3		3	UNCVX	UEAL2	40.81	142.97	106.56					38.07	38.07		

UNBUNDLED NETWORK ELEMENTS - North Carolina														Attachment: 2		Exhibit: A	
CATEGORY		RATE ELEMENTS	Interim	Zone	BCS	USOC	RATES ($)					Svc Order Submitted Elec per LSR	Svc Order Submitted Manually per LSR	Incremental Charge - Manual Svc Order vs. Electronic-1st	Incremental Charge - Manual Svc Order vs. Electronic-Add'l	Incremental Charge - Manual Svc Order vs. Electronic-Disc 1st	Incremental Charge - Manual Svc Order vs. Electronic-Disc Add'l
							Rec	Nonrecurring		Nonrecurring Disconnect		OSS Rates ($)					
								First	Add'l	First	Add'l	SOMEC	SOMAN	SOMAN	SOMAN	SOMAN	SOMAN
		Interoffice Transport - Dedicated - DS1 combination - Per Mile per month			UNC1X	1L5XX	0.5753										
		Interoffice Transport - Dedicated - DS1 combination - Facility Termination per month			UNC1X	U1TF1	71.29	217.17	163.75					38.07	38.07		
		1/0 Channelization System in combination Per Month			UNC1X	MQ1	146.69	197.78	140.06								
		Voice Grade COCI - Per Month			UNCVX	1D1VG	1.27	13.09	9.38								
		Each Additional 2-Wire VG Loop (SL 2) in Combination - Zone 1		1	UNCVX	UEAL2	14.97	142.97	106.56					38.07	38.07		
		Each Additional 2-Wire VG Loop (SL 2) in Combination - Zone 2		2	UNCVX	UEAL2	25.93	142.97	106.56					38.07	38.07		
		Each Additional 2-Wire VG Loop (SL 2) in Combination - Zone 3		3	UNCVX	UEAL2	40.81	142.97	106.56					38.07	38.07		
		Voice Grade COCI - Per Month			UNCVX	1D1VG	1.27	13.09	9.38								
		Nonrecurring Currently Combined Network Elements Switch -As-Is Charge			UNC1X	UNCCC		21.75	21.75	32.28	10.96			38.07	38.07		
	EXTENDED 4-WIRE VOICE GRADE EXTENDED LOOP WITH DEDICATED DS1 INTEROFFICE TRANSPORT																
		First 4-Wire Analog Voice Grade Loop in Combination - Zone 1		1	UNCVX	UEAL4	21.32	288.47	237.45					38.07	38.07		
		First 4-Wire Analog Voice Grade Loop in Combination - Zone 2		2	UNCVX	UEAL4	36.27	288.47	237.45					38.07	38.07		
		First 4-Wire Analog Voice Grade Loop in Combination - Zone 3		3	UNCVX	UEAL4	56.57	288.47	237.45					38.07	38.07		
		Interoffice Transport - Dedicated - DS1 combination - Per Mile Per Month			UNC1X	1L5XX	0.5753										
		Interoffice Transport - Dedicated - DS1 - Facility Termination Per Month			UNC1X	U1TF1	71.29	217.17	163.75					38.07	38.07		
		1/0 Channel System in combination Per Month			UNC1X	MQ1	146.69	197.78	140.06								
		Voice Grade COCI in combination - per month			UNCVX	1D1VG	1.27	13.09	9.38								
		Additional 4-Wire Analog Voice Grade Loop in same DS1 Interoffice Transport Combination - Zone 1		1	UNCVX	UEAL4	21.32	288.47	237.45					38.07	38.07		
		Additional 4-Wire Analog Voice Grade Loop in same DS1 Interoffice Transport Combination - Zone 2		2	UNCVX	UEAL4	36.27	288.47	237.45					38.07	38.07		
		Additional 4-Wire Analog Voice Grade Loop in same DS1 Interoffice Transport Combination - Zone 3		3	UNCVX	UEAL4	56.57	288.47	237.45					38.07	38.07		
		Additional Voice Grade COCI in combination - per month			UNCVX	1D1VG	1.27	13.09	9.38								
		Nonrecurring Currently Combined Network Elements Switch -As-Is Charge			UNC1X	UNCCC		21.75	21.75	32.28	10.96			38.07	38.07		
	EXTENDED 4-WIRE 56 KBPS EXTENDED DIGITAL LOOP WITH DEDICATED DS1 INTEROFFICE TRANSPORT																
		First 4-Wire 56Kbps Digital Grade Loop in Combination - Zone 1		1	UNCDX	UDL56	25.32	489.04	337.51					38.07	38.07		
		First 4-Wire 56Kbps Digital Grade Loop in Combination - Zone 2		2	UNCDX	UDL56	43.11	489.04	337.51					38.07	38.07		
		First 4-Wire 56Kbps Digital Grade Loop in Combination - Zone 3		3	UNCDX	UDL56	67.26	489.04	337.51					38.07	38.07		
		Interoffice Transport - Dedicated - DS1 combination - Per Mile Per Month			UNC1X	1L5XX	0.5753										
		Interoffice Transport - Dedicated - DS1 - combination Facility Termination Per Month			UNC1X	U1TF1	71.29	217.17	163.75					38.07	38.07		
		1/0 Channel System in combination Per Month			UNC1X	MQ1	146.69	197.78	140.06								
		OCU-DP COCI (data) per month (2.4-64kbs)			UNCDX	1D1DD	2.00	15.76	11.28								
		Additional 4-Wire 56Kbps Digital Grade Loop in same DS1 Interoffice Transport Combination - Zone 1		1	UNCDX	UDL56	25.32	489.04	337.51					38.07	38.07		
		Additional 4-Wire 56Kbps Digital Grade Loop in same DS1 Interoffice Transport Combination - Zone 2		2	UNCDX	UDL56	43.11	489.04	337.51					38.07	38.07		
		Additional 4-Wire 56Kbps Digital Grade Loop in same DS1 Interoffice Transport Combination - Zone 3		3	UNCDX	UDL56	67.26	489.04	337.51					38.07	38.07		
		Additional OCU-DP COCI (data) - in combination per month (2.4-64kbs)			UNCDX	1D1DD	2.00	15.76	11.28								

UNBUNDLED NETWORK ELEMENTS - North Carolina														Attachment: 2		Exhibit: A	
CATEGORY		RATE ELEMENTS	Interim	Zone	BCS	USOC	RATES ($)					Svc Order Submitted Elec per LSR	Svc Order Submitted Manually per LSR	Incremental Charge - Manual Svc Order vs. Electronic-1st	Incremental Charge - Manual Svc Order vs. Electronic-Add'l	Incremental Charge - Manual Svc Order vs. Electronic-Disc 1st	Incremental Charge - Manual Svc Order vs. Electronic-Disc Add'l
							Rec	Nonrecurring		Nonrecurring Disconnect		OSS Rates ($)					
								First	Add'l	First	Add'l	SOMEC	SOMAN	SOMAN	SOMAN	SOMAN	SOMAN
		Nonrecurring Currently Combined Network Elements Switch -As-Is Charge			UNC1X	UNCCC		21.75	21.75	32.28	10.96			38.07	38.07		
	EXTENDED 4-WIRE 64 KBPS EXTENDED DIGITAL LOOP WITH DEDICATED DS1 INTEROFFICE TRANSPORT																
		First 4-Wire 64Kbps Digital Grade Loop in Combination - Zone 1		1	UNCDX	UDL64	25.32	489.04	337.51					38.07	38.07		
		First 4-Wire 64Kbps Digital Grade Loop in Combination - Zone 2		2	UNCDX	UDL64	43.11	489.04	337.51					38.07	38.07		
		First 4-Wire 64Kbps Digital Grade Loop in Combination - Zone 3		3	UNCDX	UDL64	67.26	489.04	337.51					38.07	38.07		
		Interoffice Transport - Dedicated - DS1 combination - Per Mile Per Month			UNC1X	1L5XX	0.5753										
		interoffice Transport - Dedicated - DS1 combination - Facility Termination Per Month			UNC1X	U1TF1	71.29	217.17	163.75					38.07	38.07		
		1/0 Channel System in combination Per Month			UNC1X	MQ1	146.69	197.78	140.06								
		OCU-DP COCI (data) - in combination - per month (2.4-64kbs)			UNCDX	1D1DD	2.00	15.76	11.28								
		Additional 4-Wire 64Kbps Digital Grade Loop in same DS1 Interoffice Transport Combination - Zone 1		1	UNCDX	UDL64	25.32	489.04	337.51					38.07	38.07		
		Additional 4-Wire 64Kbps Digital Grade Loop in same DS1 Interoffice Transport Combination - Zone 2		2	UNCDX	UDL64	43.11	489.04	337.51					38.07	38.07		
		Additional 4-Wire 64Kbps Digital Grade Loop in same DS1 Interoffice Transport Combination - Zone 3		3	UNCDX	UDL64	67.26	489.04	337.51					38.07	38.07		
		Additional OCU-DP COCI (data) - in combination - per month (2.4-64kbs)			UNCDX	1D1DD	2.00	15.76	11.28								
		Nonrecurring Currently Combined Network Elements Switch -As-Is Charge			UNC1X	UNCCC		21.75	21.75	32.28	10.96			38.07	38.07		
	EXTENDED 4-WIRE DS1 DIGITAL EXTENDED LOOP WITH DEDICATED DS1 INTEROFFICE TRANSPORT																
		4-Wire DS1 Digital Loop in Combination - Zone 1		1	UNC1X	USLXX	47.60	714.84	421.47					38.07	38.07		
		4-Wire DS1 Digital Loop in Combination - Zone 2		2	UNC1X	USLXX	84.36	714.84	421.47					38.07	38.07		
		4-Wire DS1 Digital Loop in Combination - Zone 3		3	UNC1X	USLXX	134.29	714.84	421.47					38.07	38.07		
		Interoffice Transport - Dedicated - DS1 combination - Per Mile Per Month			UNC1X	1L5XX	0.5753										
		Interoffice Transport - Dedicated - DS1 combination - Facility Termination Per Month			UNC1X	U1TF1	71.29	217.17	163.75					38.07	38.07		
		Nonrecurring Currently Combined Network Elements Switch -As-Is Charge			UNC1X	UNCCC		21.75	21.75	32.28	10.96			38.07	38.07		
	EXTENDED 4-WIRE DS1 DIGITAL EXTENDED LOOP WITH DEDICATED DS3 INTEROFFICE TRANSPORT																
		First DS1Loop in Combination - Zone 1		1	UNC1X	USLXX	47.60	714.84	421.47					38.07	38.07		
		First DS1Loop in Combination - Zone 2		2	UNC1X	USLXX	84.36	714.84	421.47					38.07	38.07		
		First DS1Loop in Combination - Zone 3		3	UNC1X	USLXX	134.29	714.84	421.47					38.07	38.07		
		Interoffice Transport - Dedicated - DS3 combination - Per Mile Per Month			UNC3X	1L5XX	12.98										
		Interoffice Transport - Dedicated - DS3 - Facility Termination per month			UNC3X	U1TF3	720.38	794.94	579.55					38.07	38.07		
		3/1Channel System in combination per month			UNC3X	MQ3	233.10	403.97	234.40								
		DS1 COCI in combination per month			UNC1X	UC1D1	16.07	13.09	9.38								
		Additional DS1Loop in DS3 Interoffice Transport Combination - Zone 1		1	UNC1X	USLXX	47.60	714.84	421.47					38.07	38.07		
		Additional DS1Loop in DS3 Interoffice Transport Combination - Zone 2		2	UNC1X	USLXX	84.36	714.84	421.47					38.07	38.07		
		Additional DS1Loop in DS3 Interoffice Transport Combination - Zone 3		3	UNC1X	USLXX	134.29	714.84	421.47					38.07	38.07		
		Additoinal DS1 COCI in combination per month			UNC1X	UC1D1	16.07	13.09	9.38								
		Nonrecurring Currently Combined Network Elements Switch -As-Is Charge			UNC3X	UNCCC		21.75	21.75	32.28	10.96			38.07	38.07		
	EXTENDED 2-WIRE VOICE GRADE EXTENDED LOOP/ 2 WIRE VOICE GRADE INTEROFFICE TRANSPORT																
		2-WireVG Loop in combination - Zone 1		1	UNCVX	UEAL2	14.97	142.97	106.56								
		2-WireVG Loop in combination - Zone 2		2	UNCVX	UEAL2	25.93	142.97	106.56								
		2-WireVG Loop in combination - Zone 3		3	UNCVX	UEAL2	40.81	142.97	106.56								

UNBUNDLED NETWORK ELEMENTS - North Carolina														Attachment: 2		Exhibit: A	
CATEGORY		RATE ELEMENTS	Interim	Zone	BCS	USOC	RATES ($)					Svc Order Submitted Elec per LSR	Svc Order Submitted Manually per LSR	Incremental Charge - Manual Svc Order vs. Electronic-1st	Incremental Charge - Manual Svc Order vs. Electronic-Add'l	Incremental Charge - Manual Svc Order vs. Electronic-Disc 1st	Incremental Charge - Manual Svc Order vs. Electronic-Disc Add'l
							Rec	Nonrecurring		Nonrecurring Disconnect		OSS Rates ($)					
								First	Add'l	First	Add'l	SOMEC	SOMAN	SOMAN	SOMAN	SOMAN	SOMAN
		Interoffice Transport - 2-wire VG - Dedicated- Per Mile Per Month			UNCVX	1L5XX	0.0282										
		Interoffice Transport - 2-wire VG - Dedicated - Facility Termination per month			UNCVX	U1TV2	18.00	137.48	52.58					38.07	38.07		
		Nonrecurring Currently Combined Network Elements Switch -As-Is Charge			UNCVX	UNCCC		21.75	21.75	32.28	10.96			38.07	38.07		
	EXTENDED 4-WIRE VOICE GRADE EXTENDED LOOP/ 4 WIRE VOICE GRADE INTEROFFICE TRANSPORT																
		4-WireVG Loop in combination - Zone 1		1	UNCVX	UEAL4	21.32	288.47	237.45								
		4-WireVG Loop in combination - Zone 2		2	UNCVX	UEAL4	36.27	288.47	237.45								
		4-WireVG Loop in combination - Zone 3		3	UNCVX	UEAL4	56.57	288.47	237.45								
		Interoffice Transport - 4-wire VG - Dedicated - Per Mile Per Month			UNCVX	1L5XX	0.0282										
		Interoffice Transport - 4-wire VG - Dedicated - Facility Termination per month			UNCVX	U1TV4	22.16	106.11	65.95					38.07	38.07		
		Nonrecurring Currently Combined Network Elements Switch -As-Is Charge			UNCVX	UNCCC		21.75	21.75	32.28	10.96			38.07	38.07		
	EXTENDED DS3 DIGITAL EXTENDED LOOP WITH DEDICATED DS3 INTEROFFICE TRANSPORT																
		DS3 Local Loop in combination - per mile per month			UNC3X	1L5ND	13.33										
		DS3 Local Loop in combination - Facility Termination per month			UNC3X	UE3PX	450.69	1,071.00	646.12								
		Interoffice Transport - Dedicated - DS3 - Per Mile per month			UNC3X	1L5XX	12.98										
		Interoffice Transport - Dedicated - DS3 combination - Facility Termination per month			UNC3X	U1TF3	720.38	794.94	579.55					38.07	38.07		
		Nonrecurring Currently Combined Network Elements Switch -As-Is Charge			UNC3X	UNCCC		21.75	21.75	32.28	10.96			38.07	38.07		
	EXTENDED STS-1 DIGITAL EXTENDED LOOP WITH DEDICATED STS-1 INTEROFFICE TRANSPORT																
		STS-1 Local Lolp in combination - per mile per month			UNCSX	1L5ND	13.33										
		STS-1 Local Loop in combination - Facility Termination per month			UNCSX	UDLS1	464.26	1,071.00	646.12								
		Interoffice Transport - Dedicated - STS-1 combination - per mile per month			UNCSX	1L5XX	6.14										
		Interoffice Transport - Dedicated - STS-1 combination - Facility Termination per month			UNCSX	U1TFS	790.37	642.23	408.89					38.07	38.07		
		Nonrecurring Currently Combined Network Elements Switch -As-Is Charge			UNCSX	UNCCC		21.75	21.75	32.28	10.96			38.07	38.07		
	EXTENDED 2-WIRE ISDN EXTENDED LOOP WITH DS1 INTEROFFICE TRANSPORT																
		First 2-Wire ISDN Loop in Combination - Zone 1		1	UNCNX	U1L2X	19.42	325.91	251.31					38.07	38.07		
		First 2-Wire ISDN Loop in Combination - Zone 2		2	UNCNX	U1L2X	32.88	325.91	251.31					38.07	38.07		
		First 2-Wire ISDN Loop in Combination - Zone 3		3	UNCNX	U1L2X	51.14	325.91	251.31					38.07	38.07		
		Interoffice Transport - Dedicated - DS1 combination - per mile per month			UNC1X	1L5XX	0.5753										
		Interoffice Transport - Dedicated - DS1 combination - Facility Termination per month			UNC1X	U1TF1	71.29	217.17	163.75					38.07	38.07		
		1/0 Channel System in combination - per month			UNC1X	MQ1	146.69	197.78	140.06								
		2-wire ISDN COCI (BRITE) - in combination - per month			UNCNX	UC1CA	3.59	15.76	11.28								
		Additional 2-wire ISDN Loop in same DS1Interoffice Transport Combination - Zone 1		1	UNCNX	U1L2X	19.42	325.91	251.31					38.07	38.07		
		Additional 2-wire ISDN Loop in same DS1Interoffice Transport Combination - Zone 2		2	UNCNX	U1L2X	32.88	325.91	251.31					38.07	38.07		
		Additional 2-wire ISDN Loop in same DS1Interoffice Transport Combination - Zone 3		3	UNCNX	U1L2X	51.14	325.91	251.31					38.07	38.07		
		Additional 2-wire ISDN COCI (BRITE) - in combination- per month			UNCNX	UC1CA	3.59	15.76	11.28								
		Nonrecurring Currently Combined Network Elements Switch -As-Is Charge			UNC1X	UNCCC		21.75	21.75	32.28	10.96			38.07	38.07		
	EXTENDED 4-WIRE DS1 DIGITAL EXTENDED LOOP WITH DEDICATED STS-1 INTEROFFICE TRANSPORT																
		First DS1 Loop Combination - Zone 1		1	UNC1X	USLXX	47.60	714.84	421.47					38.07	38.07		
		First DS1 Loop Combination - Zone 2		2	UNC1X	USLXX	84.36	714.84	421.47					38.07	38.07		
		First DS1 Loop Combination - Zone 3		3	UNC1X	USLXX	134.29	714.84	421.47					38.07	38.07		

UNBUNDLED NETWORK ELEMENTS - North Carolina														Attachment: 2		Exhibit: A	
CATEGORY		RATE ELEMENTS	Interim	Zone	BCS	USOC	RATES ($)					Svc Order Submitted Elec per LSR	Svc Order Submitted Manually per LSR	Incremental Charge - Manual Svc Order vs. Electronic-1st	Incremental Charge - Manual Svc Order vs. Electronic-Add'l	Incremental Charge - Manual Svc Order vs. Electronic-Disc 1st	Incremental Charge - Manual Svc Order vs. Electronic-Disc Add'l
							Rec	Nonrecurring		Nonrecurring Disconnect		OSS Rates ($)					
								First	Add'l	First	Add'l	SOMEC	SOMAN	SOMAN	SOMAN	SOMAN	SOMAN
		Interoffice Transport - Dedicated - STS-1 combination - Per Mile Per Month			UNCSX	1L5XX	6.14										
		Interoffice Transport - Dedicated - STS-1 combination - Facility Termination per month			UNCSX	U1TFS	790.37	642.23	408.89					38.07	38.07		
		3/1 Channel System in combination per month			UNCSX	MQ3	233.10	403.97	234.40								
		DS1 COCI in combination per month			UNC1X	UC1D1	16.07	13.09	9.38								
		Additional DS1Loop in the same STS-1 Interoffice Transport Combination - Zone 1		1	UNC1X	USLXX	47.60	714.84	421.47					38.07	38.07		
		Additional DS1Loop in the same STS-1 Interoffice Transport Combination - Zone 2		2	UNC1X	USLXX	84.36	714.84	421.47					38.07	38.07		
		Additional DS1Loop in the same STS-1 Interoffice Transport Combination - Zone 3		3	UNC1X	USLXX	134.29	714.84	421.47					38.07	38.07		
		DS1 COCI in combination per month			UNC1X	UC1D1	16.07	13.09	9.38								
		Nonrecurring Currently Combined Network Elements Switch -As-Is Charge			UNCSX	UNCCC		21.75	21.75	32.28	10.96			38.07	38.07		
	EXTENDED 4-WIRE 56 KBPS DIGITAL EXTENDED LOOP WITH 56 KBPS INTEROFFICE TRANSPORT																
		4-wire 56 kbps Local Loop in combination - Zone 1		1	UNCDX	UDL56	25.32	489.04	337.51								
		4-wire 56 kbps Local Loop in combination - Zone 2		2	UNCDX	UDL56	43.11	489.04	337.51								
		4-wire 56 kbps Local Loop in combination - Zone 3		3	UNCDX	UDL56	67.26	489.04	337.51								
		Interoffice Transport - Dedicated - 4-wire 56 kbps combination - Per Mile per month			UNCDX	1L5XX	0.0282										
		Interoffice Transport - Dedicated - 4-wire 56 kbps combination - Facility Termination per month			UNCDX	U1TD5	17.40	137.48	52.58					38.07	38.07		
		Nonrecurring Currently Combined Network Elements Switch -As-Is Charge			UNCDX	UNCCC		21.75	21.75	32.28	10.96			38.07	38.07		
	EXTENDED 4-WIRE 64 KBPS DIGITAL EXTENDED LOOP WITH 64 KBPS INTEROFFICE TRANSPORT																
		4-wire 64 kbps Lcoal Loop in Combination - Zone 1		1	UNCDX	UDL64	25.32	489.04	337.51								
		4-wire 64 kbps Lcoal Loop in Combination - Zone 2		2	UNCDX	UDL64	43.11	489.04	337.51								
		4-wire 64 kbps Lcoal Loop in Combination - Zone 3		3	UNCDX	UDL64	67.26	489.04	337.51								
		Interoffice Transport - Dedicated - 4-wire 64 kbps combination - Per Mile per month			UNCDX	1L5XX	0.0282										
		Interoffice Transport - Dedicated - 4-wire 64 kbps combination - Facility Termination per month			UNCDX	U1TD6	17.40	137.48	52.58					38.07	38.07		
		Nonrecurring Currently Combined Network Elements Switch -As-Is Charge			UNCDX	UNCCC		21.75	21.75	32.28	10.96			38.07	38.07		
	EXTENDED 2-WIRE VOICE GRADE LOOP WITH DS1 INTEROFFICE TRANSPORT w/ 3/1 MUX																
		First 2-wire VG Loop (SL2) in Combination - Zone 1		1	UNCVX	UEAL2	14.97	142.97	106.56					38.07	38.07		
		First 2-wire VG Loop (SL2) in Combination - Zone 2		2	UNCVX	UEAL2	25.93	142.97	106.56					38.07	38.07		
		First 2-wire VG Loop (SL2) in Combination - Zone 3		3	UNCVX	UEAL2	40.81	142.97	106.56					38.07	38.07		
		First Interoffice Transport - Dedicated - DS1 combination - Per Mile			UNC1X	1L5XX	0.5753										
		First Interoffice Transport - Dedicated - DS1 combination - Facility Termination per month			UNC1X	U1TF1	71.29	217.17	163.75					38.07	38.07		
		Per each DS1 Channelization System Per Month			UNC1X	MQ1	146.69	197.78	140.06								
		Per each Voice Grade COCI - Per Month per month			UNCVX	1D1VG	1.27	13.09	9.38								
		3/1 Channel System in combination per month			UNC3X	MQ3	233.10	403.97	234.40								
		Per each DS1 COCI in combination per month			UNC1X	UC1D1	16.07	13.09	9.38								
		Each Additional 2-Wire VG Loop(SL 2) in the same DS1 Interoffice Transport Combination - Zone 1		1	UNCVX	UEAL2	14.97	142.97	106.56					38.07	38.07		
		Each Additional 2-Wire VG Loop(SL2) in the same DS1 Interoffice Transport Combination - Zone 2		2	UNCVX	UEAL2	25.93	142.97	106.56					38.07	38.07		
		Each Additional 2-Wire VG Loop(SL2) in the same DS1 Interoffice Transport Combination - Zone 3		3	UNCVX	UEAL2	40.81	142.97	106.56					38.07	38.07		
		Each Additional Voice Grade COCI in combination - per month			UNCVX	1D1VG	1.27	13.09	9.38								
		Each Additional DS1 Interoffice Channel per mile in same 3/1 Channel System per month			UNC1X	1L5XX	0.5753										
		Each Additional DS1 Interoffice Channel Facility Termination in same 3/1 Channel System per month			UNC1X	U1TF1	71.29	217.17	163.75					38.07	38.07		
		Each Additional DS1 COCI combination per month			UNC1X	UC1D1	16.07	13.09	9.38								

UNBUNDLED NETWORK ELEMENTS - North Carolina														Attachment: 2		Exhibit: A	
CATEGORY		RATE ELEMENTS	Interim	Zone	BCS	USOC	RATES ($)					Svc Order Submitted Elec per LSR	Svc Order Submitted Manually per LSR	Incremental Charge - Manual Svc Order vs. Electronic-1st	Incremental Charge - Manual Svc Order vs. Electronic-Add'l	Incremental Charge - Manual Svc Order vs. Electronic-Disc 1st	Incremental Charge - Manual Svc Order vs. Electronic-Disc Add'l
							Rec	Nonrecurring		Nonrecurring Disconnect		OSS Rates ($)					
								First	Add'l	First	Add'l	SOMEC	SOMAN	SOMAN	SOMAN	SOMAN	SOMAN
		Nonrecurring Currently Combined Network Elements Switch -As-Is Charge			UNC1X	UNCCC		21.75	21.75	32.28	10.96			38.07	38.07		
	EXTENDED 4-WIRE VOICE GRADE LOOP WITH DEDICATED DS1 INTEROFFICE TRANSPORT w/ 3/1 MUX																
		First 4-Wire Analog Voice Grade Local Loop in Combination - Zone 1		1	UNCVX	UEAL4	21.32	288.47	237.45					38.07	38.07		
		First 4-Wire Analog Voice Grade Local Loop in Combination - Zone 2		2	UNCVX	UEAL4	36.27	288.47	237.45					38.07	38.07		
		First 4-Wire Analog Voice Grade Local Loop in Combination - Zone 3		3	UNCVX	UEAL4	56.57	288.47	237.45					38.07	38.07		
		First Interoffice Transport - Dedicated - DS1 combination - Per Mile Per Month			UNC1X	1L5XX	0.5753										
		First Interoffice Transport - Dedicated - DS1 - Facility Termination Per Month			UNC1X	U1TF1	71.29	217.17	163.75					38.07	38.07		
		Per each 1/0 Channel System in combination Per Month			UNC1X	MQ1	146.69	197.78	140.06								
		Per each Voice Grade COCI in combination - per month			UNCVX	1D1VG	1.27	13.09	9.38								
		3/1 Channel System in combination per month			UNC3X	MQ3	233.10	403.97	234.40								
		Per each DS1 COCI in combination per month			UNC1X	UC1D1	16.07	13.09	9.38								
		Additional 4-Wire Analog Voice Grade Loop in same DS1 Interoffice Transport Combination - Zone 1		1	UNCVX	UEAL4	21.32	288.47	237.45					38.07	38.07		
		Additional 4-Wire Analog Voice Grade Loop in same DS1 Interoffice Transport Combination - Zone 2		2	UNCVX	UEAL4	36.27	288.47	237.45					38.07	38.07		
		Additional 4-Wire Analog Voice Grade Loop in same DS1 Interoffice Transport Combination - Zone 3		3	UNCVX	UEAL4	56.57	288.47	237.45					38.07	38.07		
		Each Additional DS1 Interoffice Channel per mile in same 3/1 Channel System per month			UNC1X	1L5XX	0.5753										
		Each Additional DS1 Interoffice Channel Facility Termination in same 3/1 Channel System per month			UNC1X	U1TF1	71.29	217.17	163.75					38.07	38.07		
		Additional Voice Grade COCI - in combination - per month			UNCVX	1D1VG	1.27	13.09	9.38								
		Nonrecurring Currently Combined Network Elements Switch -As-Is Charge			UNC1X	UNCCC		21.75	21.75	32.28	10.96			38.07	38.07		
	EXTENDED 4-WIRE 56 KBPS DIGITAL LOOP WITH DEDICATED DS1 INTEROFFICE TRANSPORT w/ 3/1 MUX																
		First 4-Wire 56Kbps Digital Grade Local Loop in Combination - Zone 1		1	UNCDX	UDL56	25.32	489.04	337.51					38.07	38.07		
		First 4-Wire 56Kbps Digital Grade Local Loop in Combination - Zone 2		2	UNCDX	UDL56	43.11	489.04	337.51					38.07	38.07		
		First 4-Wire 56Kbps Digital Grade Local Loop in Combination - Zone 3		3	UNCDX	UDL56	67.26	489.04	337.51					38.07	38.07		
		First Interoffice Transport - Dedicated - DS1 combination - Per Mile Per Month			UNC1X	1L5XX	0.5753										
		First Interoffice Transport - Dedicated - DS1 - combination Facility Termination Per Month			UNC1X	U1TF1	71.29	217.17	163.75					38.07	38.07		
		Per each 1/0 Channel System in combination Per Month			UNC1X	MQ1	146.69	197.78	140.06								
		Per each OCU-DP COCI (data) COCI per month (2.4-64kbs)			UNCDX	1D1DD	2.00	15.76	11.28								
		3/1 Channel System in combination per month			UNC3X	MQ3	233.10	403.97	234.40								
		Per each DS1 COCI in combination per month			UNC1X	UC1D1	16.07	13.09	9.38								
		Additional 4-Wire 56Kbps Digital Grade Loop in same DS1 Interoffice Transport Combination - Zone 1		1	UNCDX	UDL56	25.32	489.04	337.51					38.07	38.07		
		Additional 4-Wire 56Kbps Digital Grade Loop in same DS1 Interoffice Transport Combination - Zone 2		2	UNCDX	UDL56	43.11	489.04	337.51					38.07	38.07		
		Additional 4-Wire 56Kbps Digital Grade Loop in same DS1 Interoffice Transport Combination - Zone 3		3	UNCDX	UDL56	67.26	489.04	337.51					38.07	38.07		
		OCU-DP COCI (data) COCI in combination per month (2.4-64kbs)			UNCDX	1D1DD	2.00	15.76	11.28								
		Each Additional DS1 Interoffice Channel per mile in same 3/1 Channel System per month			UNC1X	1L5XX	0.5753										
		Each Additional DS1 Interoffice Channel Facility Termination in same 3/1 Channel System per month			UNC1X	U1TF1	71.29	217.17	163.75					38.07	38.07		
		Each Additional DS1 COCI in the same 3/1 channel system combination per month			UNC1X	UC1D1	16.07	13.09	9.38								

UNBUNDLED NETWORK ELEMENTS - North Carolina														Attachment: 2		Exhibit: A	
CATEGORY		RATE ELEMENTS	Interim	Zone	BCS	USOC	RATES ($)					Svc Order Submitted Elec per LSR	Svc Order Submitted Manually per LSR	Incremental Charge - Manual Svc Order vs. Electronic-1st	Incremental Charge - Manual Svc Order vs. Electronic-Add'l	Incremental Charge - Manual Svc Order vs. Electronic-Disc 1st	Incremental Charge - Manual Svc Order vs. Electronic-Disc Add'l
							Rec	Nonrecurring		Nonrecurring Disconnect		OSS Rates ($)					
								First	Add'l	First	Add'l	SOMEC	SOMAN	SOMAN	SOMAN	SOMAN	SOMAN
		Nonrecurring Currently Combined Network Elements Switch -As-Is Charge			UNC1X	UNCCC		21.75	21.75	32.28	10.96			38.07	38.07		
	EXTENDED 4-WIRE 64 KBPS DIGITAL LOOP WITH DEDICATED DS1 INTEROFFICE TRANSPORT w/ 3/1 MUX																
		First 4-Wire 64Kbps Digital Grade Loop in a DS1 Interoffice Transport Combination - Zone 1		1	UNCDX	UDL64	25.32	489.04	337.51					38.07	38.07		
		First 4-Wire 64Kbps Digital Grade Loop in a DS1 Interoffice Transport Combination - Zone 2		2	UNCDX	UDL64	43.11	489.04	337.51					38.07	38.07		
		First 4-Wire 64Kbps Digital Grade Loop in a DS1 Interoffice Transport Combination - Zone 3		3	UNCDX	UDL64	67.26	489.04	337.51					38.07	38.07		
		First Interoffice Transport - Dedicated - DS1 combination - Per Mile Per Month			UNC1X	1L5XX	0.5753										
		First Interoffice Transport - Dedicated - DS1 combination - Facility Termination Per Month			UNC1X	U1TF1	71.29	217.17	163.75					38.07	38.07		
		Per each Channel System 1/0 in combination Per Month			UNC1X	MQ1	146.69	197.78	140.06								
		Per each OCU-DP COCI (data) in combination - per month (2.4-64kbs)			UNCDX	1D1DD	2.00	15.76	11.28								
		3/1 Channel System in combination per month			UNC3X	MQ3	233.10	403.97	234.40								
		Per each DS1 COCI in combination per month			UNC1X	UC1D1	16.07	13.09	9.38								
		Additional 4-Wire 64Kbps Digital Grade Loop in same DS1 Interoffice Transport Combination - Zone 1		1	UNCDX	UDL64	25.32	489.04	337.51					38.07	38.07		
		Additional 4-Wire 64Kbps Digital Grade Loop in same DS1 Interoffice Transport Combination - Zone 2		2	UNCDX	UDL64	43.11	489.04	337.51					38.07	38.07		
		Additional 4-Wire 64Kbps Digital Grade Loop in same DS1 Interoffice Transport Combination - Zone 3		3	UNCDX	UDL64	67.26	489.04	337.51					38.07	38.07		
		Additional OCU-DP COCI (data) - DS1 to DS0 Channel System combination - per month (2.4-64kbs)			UNCDX	1D1DD	2.00	15.76	11.28								
		Each Additional DS1 Interoffice Channel per mile in same 3/1 Channel System per month			UNC1X	1L5XX	0.5753										
		Each Additional DS1 Interoffice Channel Facility Termination in same 3/1 Channel System per month			UNC1X	U1TF1	71.29	217.17	163.75					38.07	38.07		
		Each Additional DS1 COCI in the same 3/1 channel system combination per month			UNC1X	UC1D1	16.07	13.09	9.38								
		Nonrecurring Currently Combined Network Elements Switch -As-Is Charge			UNC1X	UNCCC		21.75	21.75	32.28	10.96			38.07	38.07		
	EXTENDED 2-WIRE ISDN LOOP WITH DS1 INTEROFFICE TRANSPORT w/ 3/1 MUX																
		First 2-Wire ISDN Loop in a DS1 Interoffice Combination Transport - Zone 1		1	UNCNX	U1L2X	19.42	325.91	251.31					38.07	38.07		
		First 2-Wire ISDN Loop in a DS1 Interoffice Combination Transport - Zone 2		2	UNCNX	U1L2X	32.88	325.91	251.31					38.07	38.07		
		First 2-Wire ISDN Loop in a DS1 Interoffice Combination Transport - Zone 3		3	UNCNX	U1L2X	51.14	325.91	251.31					38.07	38.07		
		First Interoffice Transport - Dedicated - DS1 combination - Per Mile per month			UNC1X	1L5XX	0.5753										
		First Interoffice Transport - Dedicated - DS1 combination - Facility Termination per month			UNC1X	U1TF1	71.29	217.17	163.75					38.07	38.07		
		Per each Channel System 1/0 in combination - per month			UNC1X	MQ1	146.69	197.78	140.06								
		Per each 2-wire ISDN COCI (BRITE) in combination - per month			UNCNX	UC1CA	3.59	15.76	11.28								
		3/1 Channel System in combination per month			UNC3X	MQ3	233.10	403.97	234.40								
		Per each DS1 COCI in combination per month			UNC1X	UC1D1	16.07	13.09	9.38								
		Additional 2-wire ISDN Loop in same DS1Interoffice Transport Combination - Zone 1		1	UNCNX	U1L2X	19.42	325.91	251.31					38.07	38.07		
		Additional 2-wire ISDN Loop in same DS1Interoffice Transport Combination - Zone 2		2	UNCNX	U1L2X	32.88	325.91	251.31					38.07	38.07		
		Additional 2-wire ISDN Loop in same DS1Interoffice Transport Combination - Zone 3		3	UNCNX	U1L2X	51.14	325.91	251.31					38.07	38.07		
		Additional 2-wire ISDN COCI (BRITE) in same 1/0 channel system combination- per month			UNCNX	UC1CA	3.59	15.76	11.28								

UNBUNDLED NETWORK ELEMENTS - North Carolina														Attachment: 2		Exhibit: A	
CATEGORY		RATE ELEMENTS	Interim	Zone	BCS	USOC	RATES ($)					Svc Order Submitted Elec per LSR	Svc Order Submitted Manually per LSR	Incremental Charge - Manual Svc Order vs. Electronic-1st	Incremental Charge - Manual Svc Order vs. Electronic-Add'l	Incremental Charge - Manual Svc Order vs. Electronic-Disc 1st	Incremental Charge - Manual Svc Order vs. Electronic-Disc Add'l
							Rec	Nonrecurring		Nonrecurring Disconnect		OSS Rates ($)					
								First	Add'l	First	Add'l	SOMEC	SOMAN	SOMAN	SOMAN	SOMAN	SOMAN
		Each Additional DS1 Interoffice Channel per mile in same 3/1 Channel System per month			UNC1X	1L5XX	0.5753										
		Each Additional DS1 Interoffice Channel Facility Termination in same 3/1 Channel System per month			UNC1X	U1TF1	71.29	217.17	163.75					38.07	38.07		
		Each Additional DS1 COCI in the same 3/1 channel system combination per month			UNC1X	UC1D1	16.07	13.09	9.38								
		Nonrecurring Currently Combined Network Elements Switch -As-Is Charge			UNC1X	UNCCC		21.75	21.75	32.28	10.96			38.07	38.07		
	EXTENDED 4-WIRE DS1 LOOP WITH DEDICATED DS1 INTEROFFICE TRANSPORT w/ 3/1 MUX																
		First 4-wire DS1 Digital Lcoal Loop in Combination - Zone 1		1	UNC1X	USLXX	47.60	714.84	421.47					38.07	38.07		
		First 4-wire DS1 Digital Lcoal Loop in Combination - Zone 2		2	UNC1X	USLXX	84.36	714.84	421.47					38.07	38.07		
		First 4-wire DS1 Digital Lcoal Loop in Combination - Zone 3		3	UNC1X	USLXX	134.29	714.84	421.47					38.07	38.07		
		First Interoffice Transport - Dedicated - DS1 combination - Per Mile Per Month			UNC1X	1L5XX	0.5753										
		First Interoffice Transport - Dedicated - DS1 combination - Facility Termination Per Month			UNC1X	U1TF1	71.29	217.17	163.75					38.07	38.07		
		3/1 Channel System in combination per month			UNC3X	MQ3	233.10	403.97	234.40								
		Per each DS1 COCI combination per month			UNC1X	UC1D1	16.07	13.09	9.38								
		Each Additional DS1 Interoffice Channel per mile in same 3/1 Channel System per month			UNC1X	1L5XX	0.5753										
		Each Additional DS1 Interoffice Channel Facility Termination in same 3/1 Channel System per month			UNC1X	U1TF1	71.29	217.17	163.75					38.07	38.07		
		Each Additional DS1 COCI in the same 3/1 channel system combination per month			UNC1X	UC1D1	16.07	13.09	9.38								
		Additional 4-Wire DS1 Digital Local Loop in Combination - Zone 1		1	UNC1X	USLXX	47.60	714.84	421.47					38.07	38.07		
		Additional 4-Wire DS1 Digital Local Loop in Combination - Zone 2		2	UNC1X	USLXX	84.36	714.84	421.47					38.07	38.07		
		Additional 4-Wire DS1 Digital Local Loop in Combination - Zone 3		3	UNC1X	USLXX	134.29	714.84	421.47					38.07	38.07		
		Nonrecurring Currently Combined Network Elements Switch -As-Is Charge			UNC1X	UNCCC		21.75	21.75	32.28	10.96			38.07	38.07		
	EXTENDED 4-WIRE 56 KBPS DIGITAL EXTENDED LOOP WITH DS0 INTEROFFICE TRANSPORT																
		First 4-wire 56 kbps Local Loop in combination - Zone 1		1	UNCDX	UDL56	25.32	489.04	337.51								
		First 4-wire 56 kbps Local Loop in combination - Zone 2		2	UNCDX	UDL56	43.11	489.04	337.51								
		First 4-wire 56 kbps Local Loop in combination - Zone 3		3	UNCDX	UDL56	67.26	489.04	337.51								
		First 4-wiree 56 kbps Interoffice Transport - Dedicated - Per Mile per month			UNCDX	1L5XX	0.0282										
		First 4-wire 56 kbps Interoffice Transport - Dedicated - Facility Termination per month			UNCDX	U1TD5	17.40	137.48	52.58					38.07	38.07		
		Nonrecurring Currently Combined Network Elements Switch -As-Is Charge			UNCDX	UNCCC		21.75	21.75	32.28	10.96			38.07	38.07		
	EXTENDED 4-WIRE 64 KBPS DIGITAL EXTENDED LOOP WITH DS0 INTEROFFICE TRANSPORT																
		First 4-wire 64 kbps Local Loop in combination - Zone 1		1	UNCDX	UDL64	25.32	489.04	337.51								
		First 4-wire 64 kbps Local Loop in combination - Zone 2		2	UNCDX	UDL64	43.11	489.04	337.51								
		First 4-wire 64 kbps Local Loop in combination - Zone 3		3	UNCDX	UDL64	67.26	489.04	337.51								
		First I4-wire 65 kbps Interoffice Transport - Dedicated - Per Mile per month			UNCDX	1L5XX	0.0282										
		First 4-wire 64 kbps Interoffice Transport - Dedicated - Facility Termination per month			UNCDX	U1TD6	17.40	137.48	52.58					38.07	38.07		
		Nonrecurring Currently Combined Network Elements Switch -As-Is Charge			UNCDX	UNCCC		21.75	21.75	32.28	10.96			38.07	38.07		
ADDITIONAL NETWORK ELEMENTS																	
	When used as a part of a currently combined facility, the non-recurrng charges do not apply, but a Switch As Is charge does apply.																
	When used as ordinarily combined network elements in All States, the non-recurring charges apply and the Switch As Is Charge does not.																
		Nonrecurring Currently Combined Network Elements Switch -As-Is Charge - 2 wire/4-Wire VG			UNCVX	UNCCC		21.75	21.75	32.28	10.96			26.94	12.76		
		Nonrecurring Currently Combined Network Elements Switch -As-Is Charge - 56/64 kbps			UNCDX	UNCCC		21.75	21.75	32.28	10.96			26.94	12.76		

UNBUNDLED NETWORK ELEMENTS - North Carolina														Attachment: 2		Exhibit: A	
CATEGORY		RATE ELEMENTS	Interim	Zone	BCS	USOC	RATES ($)					Svc Order Submitted Elec per LSR	Svc Order Submitted Manually per LSR	Incremental Charge - Manual Svc Order vs. Electronic-1st	Incremental Charge - Manual Svc Order vs. Electronic-Add'l	Incremental Charge - Manual Svc Order vs. Electronic-Disc 1st	Incremental Charge - Manual Svc Order vs. Electronic-Disc Add'l
							Rec	Nonrecurring		Nonrecurring Disconnect		OSS Rates ($)					
								First	Add'l	First	Add'l	SOMEC	SOMAN	SOMAN	SOMAN	SOMAN	SOMAN
	MULTIPLEXERS																
		DS1 to DS0 Channel System per month			UNC1X	MQ1	146.69	197.78	140.06					26.94	12.76		
		OCU-DP COCI (data) - DS1 to DS0 Channel System - per month (2.4-64kbs) used for a Local Loop			UDL	1D1DD	2.00	13.09	9.38								
		OCU-DP COCI (data) - DS1 to DS0 Channel System - per month (2.4-64kbs) used for connection to a channelized DS1 Local Channel in the same SWC as collocation			U1TUD	1D1DD	2.00	13.09	9.38								
		2-wire ISDN COCI (BRITE) - DS1 to DS0 Channel Systsem - per month for a Local Loop			UDN	UC1CA	3.59	13.09	9.38								
		2-wire ISDN COCI (BRITE) - DS1 to DS0 Channel Systsem - per month used for connection to a channelized DS1 Local Channel in the same SWC as collocation			U1TUB	UC1CA	3.59	13.09	9.38								
		Voice Grade COCI - DS1 to DS0 Channel System - per month used for a Local Loop			UEA	1D1VG	1.27	13.09	9.38								
		Voice Grade COCI - DS1 to DS0 Channel System - per month used for connection to a channelized DS1 Local Channel in the same SWC as collocation			U1TUC	1D1VG	1.27	13.09	9.38								
		DS3 to DS1 Channel System per month			UNC3X	MQ3	233.10	403.97	234.40					26.94	12.76		
		STS-1 to DS1 Channel System per month			UNCSX	MQ3	233.10	403.97	234.40					26.94	12.76		
		DS1 COCI used with Loop per month			USL	UC1D1	16.07	13.09	9.38								
		DS1 COCI (used for connection to a channelized DS1 Local Channel in the same SWC as collocation) per month			U1TUA	UC1D1	16.07	13.09	9.38								
		DS1 COCI used with Interoffice Channel per month			U1TD1	UC1D1	16.07	13.09	9.38								
		DS3 Interface Unit (DS1 COCI) used with Local Channel per month			ULDD1	UC1D1	16.07	13.09	9.38								
														26.94	12.76		
														26.94	12.76		

UNBUNDLED NETWORK ELEMENTS - South Carolina														Attachment: 2		Exhibit: A	
CATEGORY		RATE ELEMENTS	Interim	Zone	BCS	USOC	RATES ($)					Svc Order Submitted Elec per LSR	Svc Order Submitted Manually per LSR	Incremental Charge - Manual Svc Order vs. Electronic-1st	Incremental Charge - Manual Svc Order vs. Electronic-Add'l	Incremental Charge - Manual Svc Order vs. Electronic-Disc 1st	Incremental Charge - Manual Svc Order vs. Electronic-Disc Add'l
							Rec	Nonrecurring		Nonrecurring Disconnect		OSS Rates ($)					
								First	Add'l	First	Add'l	SOMEC	SOMAN	SOMAN	SOMAN	SOMAN	SOMAN
	The "Zone" shown in the sections for stand-alone loops or loops as part of a combination refers to Geographically Deaveraged UNE Zones. To view Geographically Deaveraged UNE Zone Designations by Central Office, refer to internet Website: http://www.interconnection.bellsouth.com/become_a_clec/html/interconnection.htm																
OPERATIONAL SUPPORT SYSTEMS (OSS) - "REGIONAL RATES"																	
	NOTE: (1) CLEC should contact its contract negotiator if it prefers the "state specific" OSS charges as ordered by the State Commissions. The OSS charges currently contained in this rate exhibit are the BellSouth "regional" service ordering charges. CLEC may elect either the state specific Commission ordered rates for the service ordering charges, or CLEC may elect the regional service ordering charge, however, CLEC can not obtain a mixture of the two regardless if CLEC has a interconnection contract established in each of the 9 states.																
	NOTE: (2) Any element that can be ordered electronically will be billed according to the SOMEC rate listed in this category. Please refer to BellSouth's Local Ordering Handbook (LOH) to determine if a product can be ordered electronically. For those elements that cannot be ordered electronically at present per the LOH, the listed SOMEC rate in this category reflects the charge that would be billed to a CLEC once electronic ordering capabilities come on-line for that element. Otherwise, the manual ordering charge, SOMAN, will be applied to a CLECs bill when it submits an LSR to BellSouth.																
		OSS - Electronic Service Order Charge, Per Local Service Request (LSR) - UNE Only				SOMEC		3.50	0.00	3.50	0.00						
		OSS - Manual Service Order Charge, Per Local Service Request (LSR) - UNE Only				SOMAN		15.69	0.00	1.97	0.00						
UNE SERVICE DATE ADVANCEMENT CHARGE																	
	NOTE: The Expedite charge will be maintained commensurate with BellSouth's FCC No.1 Tariff, Section 5 as applicable.																
		UNE Expedite Charge per Circuit or Line Assignable USOC, per Day			UAL, UEANL, UCL, UEF, UDF, UEQ, UDL, UENTW, UDN, UEA, UHL, ULC, USL, U1T12, U1T48, U1TD1, U1TD3, U1TDX, U1TO3, U1TS1, U1TVX, UC1BC, UC1BL, UC1CC, UC1CL, UC1DC, UC1DL, UC1EC, UC1EL, UC1FC, UC1FL, UC1GC, UC1GL, UC1HC, UC1HL, UDL12, UDL48, UDLO3, UDLSX, UE3, ULD12, ULD48, ULDD1, ULDD3, ULDDX, ULDO3, ULDS1, ULDVX, UNC1X, UNC3X, UNCDX, UNCNX, UNCSX, UNCVX, UNLD1, UNLD3, UXTD1, UXTD3, UXTS1, U1TUC, U1TUD, U1TUB, U1TUA	SDASP		200.00									
UNBUNDLED EXCHANGE ACCESS LOOP																	
	2-WIRE ANALOG VOICE GRADE LOOP																
		2-Wire Analog Voice Grade Loop - Service Level 1- Zone 1		1	UEANL	UEAL2	14.94	37.92	17.62	23.56	5.32						
		2-Wire Analog Voice Grade Loop - Service Level 1- Zone 2		2	UEANL	UEAL2	21.39	37.92	17.62	23.56	5.32						
		2-Wire Analog Voice Grade Loop - Service Level 1- Zone 3		3	UEANL	UEAL2	26.72	37.92	17.62	23.56	5.32						
		2-Wire Analog Voice Grade Loop - Service Level 1- Zone 1		1	UEANL	UEASL	14.94	37.92	17.62	23.56	5.32						
		2-Wire Analog Voice Grade Loop - Service Level 1- Zone 2		2	UEANL	UEASL	21.39	37.92	17.62	23.56	5.32						
		2-Wire Analog Voice Grade Loop - Service Level 1- Zone 3		3	UEANL	UEASL	26.72	37.92	17.62	23.56	5.32						
		Unbundled Miscellaneous Rate Element, Tag Loop at End User Premise			UEANL	URETL		8.33	0.83								
		Loop Testing - Basic 1st Half Hour			UEANL	URET1		34.23	34.23								
		Loop Testing - Basic Additional Half Hour			UEANL	URETA		19.90	19.90								

UNBUNDLED NETWORK ELEMENTS - South Carolina													Attachment: 2		Exhibit: A	
CATEGORY	RATE ELEMENTS	Interim	Zone	BCS	USOC	RATES ($)					Svc Order Submitted Elec per LSR	Svc Order Submitted Manually per LSR	Incremental Charge - Manual Svc Order vs. Electronic-1st	Incremental Charge - Manual Svc Order vs. Electronic-Add'l	Incremental Charge - Manual Svc Order vs. Electronic-Disc 1st	Incremental Charge - Manual Svc Order vs. Electronic-Disc Add'l
						Rec	Nonrecurring		Nonrecurring Disconnect		OSS Rates ($)					
							First	Add'l	First	Add'l	SOMEC	SOMAN	SOMAN	SOMAN	SOMAN	SOMAN
	CLEC to CLEC Conversion Charge Without Outside Dispatch (UVL-SL1)			UEANL	UREWO		15.81	8.96								
	Unbundled Voice Loop, Non-Design Voice Loop, billing for BST providing make-up (Engineering Information - E.I.)			UEANL	UEANM		13.47	13.47								
	Manual Order Coordination for UVL-SL1s (per loop)			UEANL	UEAMC		8.17	8.17								
	Order Coordination for Specified Conversion Time for UVL-SL1 (per LSR)			UEANL	OCOSL		18.13	18.13								
2-WIRE Unbundled COPPER LOOP																
	2-Wire Unbundled Copper Loop - Non-Designed Zone 1		1	UEQ	UEQ2X	12.94	36.40	16.10	22.66	4.42						
	2 Wire Unbundled Copper Loop - Non-Designed - Zone 2		2	UEQ	UEQ2X	14.51	36.40	16.10	22.66	4.42						
	2 Wire Unbundled Copper Loop - Non-Designed - Zone 3		3	UEQ	UEQ2X	15.02	36.40	16.10	22.66	4.42						
	Unbundled Miscellaneous Rate Element, Tag Loop at End User Premise			UEQ	URETL		8.33	0.83								
	Manual Order Coordination 2 Wire Unbundled Copper Loop - Non-Designed (per loop)			UEQ	USBMC		8.17	8.17								
	Unbundled Copper Loop, Non-Design Copper Loop, billing for BST providing make-up (Engineering Information - E.I.)			UEQ	UEQMU		13.47	13.47								
	Loop Testing - Basic 1st Half Hour			UEQ	URET1		34.23	34.23								
	Loop Testing - Basic Additional Half Hour			UEQ	URETA		19.90	19.90								
	CLEC to CLEC Conversion Charge Without Outside Dispatch (UCL-ND)			UEQ	UREWO		14.30	7.45								
UNBUNDLED EXCHANGE ACCESS LOOP																
2-WIRE ANALOG VOICE GRADE LOOP																
	2-Wire Analog Voice Grade Loop - Service Level 2 w/Loop or Ground Start Signaling - Zone 1		1	UEA	UEAL2	16.68	105.98	68.43	53.05	10.61						
	2-Wire Analog Voice Grade Loop - Service Level 2 w/Loop or Ground Start Signaling - Zone 2		2	UEA	UEAL2	23.13	105.98	68.43	53.05	10.61						
	2-Wire Analog Voice Grade Loop - Service Level 2 w/Loop or Ground Start Signaling - Zone 3		3	UEA	UEAL2	28.46	105.98	68.43	53.05	10.61						
	Order Coordination for Specified Conversion Time (per LSR)			UEA	OCOSL		18.13									
	2-Wire Analog Voice Grade Loop - Service Level 2 w/Reverse Battery Signaling - Zone 1		1	UEA	UEAR2	16.68	105.98	68.43	53.05	10.61						
	2-Wire Analog Voice Grade Loop - Service Level 2 w/Reverse Battery Signaling - Zone 2		2	UEA	UEAR2	23.13	105.98	68.43	53.05	10.61						
	2-Wire Analog Voice Grade Loop - Service Level 2 w/Reverse Battery Signaling - Zone 3		3	UEA	UEAR2	28.46	105.98	68.43	53.05	10.61						
	Order Coordination for Specified Conversion Time (per LSR)			UEA	OCOSL		18.13									
	CLEC to CLEC Conversion Charge without outside dispatch			UEA	UREWO		87.90	36.44								
	Loop Tagging - Service Level 2 (SL2)			UEA	URETL		11.24	1.10								
4-WIRE ANALOG VOICE GRADE LOOP																
	4-Wire Analog Voice Grade Loop - Zone 1		1	UEA	UEAL4	32.59	132.38	94.83	59.35	14.61						
	4-Wire Analog Voice Grade Loop - Zone 2		2	UEA	UEAL4	43.89	132.38	94.83	59.35	14.61						
	4-Wire Analog Voice Grade Loop - Zone 3		3	UEA	UEAL4	43.38	132.38	94.83	59.35	14.61						
	Order Coordination for Specified Conversion Time (per LSR)			UEA	OCOSL		18.13									
	CLEC to CLEC Conversion Charge without outside dispatch			UEA	UREWO		87.90	36.44								
2-WIRE ISDN DIGITAL GRADE LOOP																
	2-Wire ISDN Digital Grade Loop - Zone 1		1	UDN	U1L2X	25.21	117.58	80.03	53.05	10.61						
	2-Wire ISDN Digital Grade Loop - Zone 2		2	UDN	U1L2X	32.76	117.58	80.03	53.05	10.61						
	2-Wire ISDN Digital Grade Loop - Zone 3		3	UDN	U1L2X	37.70	117.58	80.03	53.05	10.61						
	Order Coordination For Specified Conversion Time (per LSR)			UDN	OCOSL		18.13									
	CLEC to CLEC Conversion Charge without outside dispatch			UDN	UREWO		91.82	44.25								
2-WIRE ASYMMETRICAL DIGITAL SUBSCRIBER LINE (ADSL) COMPATIBLE LOOP																
	2 Wire Unbundled ADSL Loop including manual service inquiry & facility reservation - Zone 1		1	UAL	UAL2X	12.19	120.84	70.56	50.37	7.93						
	2 Wire Unbundled ADSL Loop including manual service inquiry & facility reservation - Zone 2		2	UAL	UAL2X	13.71	120.84	70.56	50.37	7.93						
	2 Wire Unbundled ADSL Loop including manual service inquiry & facility reservation - Zone 3		3	UAL	UAL2X	14.14	120.84	70.56	50.37	7.93						
	Order Coordination for Specified Conversion Time (per LSR)			UAL	OCOSL		18.13									

UNBUNDLED NETWORK ELEMENTS - South Carolina														Attachment: 2		Exhibit: A	
CATEGORY		RATE ELEMENTS	Interim	Zone	BCS	USOC	RATES ($)					Svc Order Submitted Elec per LSR	Svc Order Submitted Manually per LSR	Incremental Charge - Manual Svc Order vs. Electronic-1st	Incremental Charge - Manual Svc Order vs. Electronic-Add'l	Incremental Charge - Manual Svc Order vs. Electronic-Disc 1st	Incremental Charge - Manual Svc Order vs. Electronic-Disc Add'l
							Rec	Nonrecurring		Nonrecurring Disconnect		OSS Rates ($)					
								First	Add'l	First	Add'l	SOMEC	SOMAN	SOMAN	SOMAN	SOMAN	SOMAN
		2 Wire Unbundled ADSL Loop without manual service inquiry & facility reservaton - Zone 1		1	UAL	UAL2W	12.19	95.81	57.82	50.37	7.93						
		2 Wire Unbundled ADSL Loop without manual service inquiry & facility reservaton - Zone 2		2	UAL	UAL2W	13.71	95.81	57.82	50.37	7.93						
		2 Wire Unbundled ADSL Loop without manual service inquiry & facility reservaton - Zone 3		3	UAL	UAL2W	14.14	95.81	57.82	50.37	7.93						
		Order Coordination for Specified Conversion Time (per LSR)			UAL	OCOSL		18.13									
		CLEC to CLEC Conversion Charge without outside dispatch			UAL	UREWO		86.38	40.48								
	2-WIRE HIGH BIT RATE DIGITAL SUBSCRIBER LINE (HDSL) COMPATIBLE LOOP																
		2 Wire Unbundled HDSL Loop including manual service inquiry & facility reservation - Zone 1		1	UHL	UHL2X	9.58	129.52	79.24	50.37	7.93						
		2 Wire Unbundled HDSL Loop including manual service inquiry & facility reservation - Zone 2		2	UHL	UHL2X	10.92	129.52	79.24	50.37	7.93						
		2 Wire Unbundled HDSL Loop including manual service inquiry & facility reservation - Zone 3		3	UHL	UHL2X	11.40	129.52	79.24	50.37	7.93						
		Order Coordination for Specified Conversion Time (per LSR)			UHL	OCOSL		18.13									
		2 Wire Unbundled HDSL Loop without manual service inquiry and facility reservation - Zone 1		1	UHL	UHL2W	9.58	104.49	66.50	50.37	7.93						
		2 Wire Unbundled HDSL Loop without manual service inquiry and facility reservation - Zone 2		2	UHL	UHL2W	10.92	104.49	66.50	50.37	7.93						
		2 Wire Unbundled HDSL Loop without manual service inquiry and facility reservation - Zone 3		3	UHL	UHL2W	11.40	104.49	66.50	50.37	7.93						
		Order Coordination for Specified Conversion Time (per LSR)			UHL	OCOSL		18.13									
		CLEC to CLEC Conversion Charge without outside dispatch			UHL	UREWO		86.32	40.48								
	4-WIRE HIGH BIT RATE DIGITAL SUBSCRIBER LINE (HDSL) COMPATIBLE LOOP																
		4 Wire Unbundled HDSL Loop including manual service inquiry and facility reservation - Zone 1		1	UHL	UHL4X	16.02	158.18	107.89	55.12	10.38						
		4-Wire Unbundled HDSL Loop including manual service inquiry and facility reservation - Zone 2		2	UHL	UHL4X	14.33	158.18	107.89	55.12	10.38						
		4-Wire Unbundled HDSL Loop including manual service inquiry and facility reservation - Zone 3		3	UHL	UHL4X	16.84	158.18	107.89	55.12	10.38						
		Order Coordination for Specified Conversion Time (per LSR)			UHL	OCOSL		18.13									
		4-Wire Unbundled HDSL Loop without manual service inquiry and facility reservation - Zone 1		1	UHL	UHL4W	16.02	133.14	95.16	55.12	10.38						
		4-Wire Unbundled HDSL Loop without manual service inquiry and facility reservation - Zone 2		2	UHL	UHL4W	14.33	133.14	95.16	55.12	10.38						
		4-Wire Unbundled HDSL Loop without manual service inquiry and facility reservation - Zone 3		3	UHL	UHL4W	16.84	133.14	95.16	55.12	10.38						
		Order Coordination for Specified Conversion Time (per LSR)			UHL	OCOSL		18.13									
		CLEC to CLEC Conversion Charge without outside dispatch			UHL	UREWO		86.32	40.48								
	4-WIRE DS1 DIGITAL LOOP																
		4-Wire DS1 Digital Loop - Zone 1		1	USL, NTCD1	USLXX	79.51	253.03	157.89	44.80	11.73						
		4-Wire DS1 Digital Loop - Zone 2		2	USL, NTCD1	USLXX	136.00	253.03	157.89	44.80	11.73						
		4-Wire DS1 Digital Loop - Zone 3		3	USL, NTCD1	USLXX	229.15	253.03	157.89	44.80	11.73						
		Order Coordination for Specified Conversion Time (per LSR)			USL, NTCD1	OCOSL		18.13									
		CLEC to CLEC Conversion Charge without outside dispatch			USL, NTCD1	UREWO		101.30	43.13								
	4-WIRE 19.2, 56 OR 64 KBPS DIGITAL GRADE LOOP																
		4 Wire Unbundled Digital 19.2 Kbps		1	UDL	UDL19	29.93	126.66	89.12	59.35	14.61						
		4 Wire Unbundled Digital 19.2 Kbps		2	UDL	UDL19	33.99	126.66	89.12	59.35	14.61						
		4 Wire Unbundled Digital 19.2 Kbps		3	UDL	UDL19	34.74	126.66	89.12	59.35	14.61						
		4 Wire Unbundled Digital Loop 56 Kbps - Zone 1		1	UDL	UDL56	29.93	126.66	89.12	59.35	14.61						
		4 Wire Unbundled Digital Loop 56 Kbps - Zone 2		2	UDL	UDL56	33.99	126.66	89.12	59.35	14.61						
		4 Wire Unbundled Digital Loop 56 Kbps - Zone 3		3	UDL	UDL56	34.74	126.66	89.12	59.35	14.61						
		Order Coordination for Specified Conversion Time (per LSR)			UDL	OCOSL		18.13									
		4 Wire Unbundled Digital Loop 64 Kbps - Zone 1		1	UDL	UDL64	29.93	126.66	89.12	59.35	14.61						
		4 Wire Unbundled Digital Loop 64 Kbps - Zone 2		2	UDL	UDL64	33.99	126.66	89.12	59.35	14.61						
		4 Wire Unbundled Digital Loop 64 Kbps - Zone 3		3	UDL	UDL64	34.74	126.66	89.12	59.35	14.61						
		Order Coordination for Specified Conversion Time (per LSR)			UDL	OCOSL		18.13									
		CLEC to CLEC Conversion Charge without outside dispatch			UDL	UREWO		102.34	49.85								

UNBUNDLED NETWORK ELEMENTS - South Carolina														Attachment: 2		Exhibit: A	
CATEGORY		RATE ELEMENTS	Interim	Zone	BCS	USOC	RATES ($)					Svc Order Submitted Elec per LSR	Svc Order Submitted Manually per LSR	Incremental Charge - Manual Svc Order vs. Electronic-1st	Incremental Charge - Manual Svc Order vs. Electronic-Add'l	Incremental Charge - Manual Svc Order vs. Electronic-Disc 1st	Incremental Charge - Manual Svc Order vs. Electronic-Disc Add'l
							Rec	Nonrecurring		Nonrecurring Disconnect		OSS Rates ($)					
								First	Add'l	First	Add'l	SOMEC	SOMAN	SOMAN	SOMAN	SOMAN	SOMAN
	2-WIRE Unbundled COPPER LOOP																
		2-Wire Unbundled Copper Loop-Designed including manual service inquiry & facility reservation - Zone 1		1	UCL	UCLPB	12.19	119.91	69.62	50.37	7.93						
		2-Wire Unbundled Copper Loop-Designed including manual service inquiry & facility reservation - Zone 2		2	UCL	UCLPB	13.71	119.91	69.62	50.37	7.93						
		2 Wire Unbundled Copper Loop-Designed including manual service inquiry & facility reservation - Zone 3		3	UCL	UCLPB	14.14	119.91	69.62	50.37	7.93						
		Order Coordination for Unbundled Copper Loops (per loop)			UCL	UCLMC		8.17	8.17								
		2-Wire Unbundled Copper Loop-Designed without manual service inquiry and facility reservation - Zone 1		1	UCL	UCLPW	12.19	94.87	56.89	50.37	7.93						
		2-Wire Unbundled Copper Loop-Designed without manual service inquiry and facility reservation - Zone 2		2	UCL	UCLPW	13.71	94.87	56.89	50.37	7.93						
		2-Wire Unbundled Copper Loop-Designed without manual service inquiry and facility reservation - Zone 3		3	UCL	UCLPW	14.14	94.87	56.89	50.37	7.93						
		Order Coordination for Unbundled Copper Loops (per loop)			UCL	UCLMC		8.17	8.17								
		CLEC to CLEC Conversion Charge without outside dispatch (UCL-Des)			UCL	UREWO		94.87	42.57								
	4-WIRE COPPER LOOP																
		4-Wire Copper Loop-Designed including manual service inquiry and facility reservation - Zone 1		1	UCL	UCL4S	19.64	144.17	93.88	55.12	10.38						
		4-Wire Copper Loop-Designed including manual service inquiry and facility reservation - Zone 2		2	UCL	UCL4S	20.90	144.17	93.88	55.12	10.38						
		4-Wire Copper Loop-Designed including manual service inquiry and facility reservation - Zone 3		3	UCL	UCL4S	19.34	144.17	93.88	55.12	10.38						
		Order Coordination for Unbundled Copper Loops (per loop)			UCL	UCLMC		8.17	8.17								
		4-Wire Copper Loop-Designed without manual service inquiry and facility reservation - Zone 1		1	UCL	UCL4W	19.64	119.13	81.15	55.12	10.38						
		4-Wire Copper Loop-Designed without manual service inquiry and facility reservation - Zone 2		2	UCL	UCL4W	20.90	119.13	81.15	55.12	10.38						
		4-Wire Copper Loop-Designed without manual service inquiry and facility reservation - Zone 3		3	UCL	UCL4W	19.34	119.13	81.15	55.12	10.38						
		Order Coordination for Unbundled Copper Loops (per loop)			UCL	UCLMC		8.17	8.17								
		CLEC to CLEC Conversion Charge without outside dispatch (UCL-Des)			UCL	UREWO		94.87	42.57								
LOOP MODIFICATION																	
		Unbundled Loop Modification, Removal of Load Coils - 2 Wire pair less than or equal to 18k ft, per Unbundled Loop			UAL, UHL, UCL, UEQ, ULS, UEA, UEANL, UEPSR, UEPSB	ULM2L		32.46	32.46								
		Unbundled Loop Modification Removal of Load Coils - 4 Wire less than or equal to 18K ft, per Unbundled Loop			UHL, UCL, UEA	ULM4L		32.46	32.46								
		Unbundled Loop Modification Removal of Bridged Tap Removal, per unbundled loop			UAL, UHL, UCL, UEQ, ULS, UEA, UEANL, UEPSR, UEPSB	ULMBT		32.48	32.48								
SUB-LOOPS																	
	Sub-Loop Distribution																
		Sub-Loop - Per Cross Box Location - CLEC Feeder Facility Set-Up	I		UEANL	USBSA		241.42	241.42								
		Sub-Loop - Per Cross Box Location - Per 25 Pair Panel Set-Up	I		UEANL	USBSB		22.69	22.69								
		Sub-Loop - Per Building Equipment Room - CLEC Feeder Facility Set-Up	I		UEANL	USBSC		177.84	177.84								
		Sub-Loop - Per Building Equipment Room - Per 25 Pair Panel Set-Up	I		UEANL	USBSD		55.58	55.58								
		Sub-Loop Distribution Per 2-Wire Analog Voice Grade Loop - Zone 1	I	1	UEANL	USBN2	8.87	65.94	31.03	45.35	6.71						
		Sub-Loop Distribution Per 2-Wire Analog Voice Grade Loop - Zone 2	I	2	UEANL	USBN2	12.58	65.94	31.03	45.35	6.71						

UNBUNDLED NETWORK ELEMENTS - South Carolina														Attachment: 2		Exhibit: A	
CATEGORY		RATE ELEMENTS	Interim	Zone	BCS	USOC	RATES ($)					Svc Order Submitted Elec per LSR	Svc Order Submitted Manually per LSR	Incremental Charge - Manual Svc Order vs. Electronic-1st	Incremental Charge - Manual Svc Order vs. Electronic-Add'l	Incremental Charge - Manual Svc Order vs. Electronic-Disc 1st	Incremental Charge - Manual Svc Order vs. Electronic-Disc Add'l
							Rec	Nonrecurring		Nonrecurring Disconnect		OSS Rates ($)					
								First	Add'l	First	Add'l	SOMEC	SOMAN	SOMAN	SOMAN	SOMAN	SOMAN
		Sub-Loop Distribution Per 2-Wire Analog Voice Grade Loop - Zone 3	I	3	UEANL	USBN2	14.79	65.94	31.03	45.35	6.71						
		Order Coordination for Unbundled Sub-Loops, per sub-loop pair			UEANL	USBMC		8.17	8.17								
		Sub-Loop Distribution Per 4-Wire Analog Voice Grade Loop - Zone 1		1	UEANL	USBN4	14.11	79.21	44.29	49.82	9.09						
		Sub-Loop Distribution Per 4-Wire Analog Voice Grade Loop - Zone 2		2	UEANL	USBN4	19.40	79.21	44.29	49.82	9.09						
		Sub-Loop Distribution Per 4-Wire Analog Voice Grade Loop - Zone 3		3	UEANL	USBN4	18.90	79.21	44.29	49.82	9.09						
		Order Coordination for Unbundled Sub-Loops, per sub-loop pair			UEANL	USBMC		8.17	8.17								
		Sub-Loop 2-Wire Intrabuilding Network Cable (INC)	I		UEANL	USBR2	2.41	53.13	18.21	45.35	6.71						
		Order Coordination for Unbundled Sub-Loops, per sub-loop pair			UEANL	USBMC		8.17	8.17								
		Sub-Loop 4-Wire Intrabuilding Network Cable (INC)	I		UEANL	USBR4	5.36	59.38	24.47	49.82	9.09						
		Order Coordination for Unbundled Sub-Loops, per sub-loop pair			UEANL	USBMC		8.17	8.17								
		Loop Testing - Basic 1st Half Hour			UEANL	URET1		34.23	34.23								
		Loop Testing - Basic Additional Half Hour			UEANL	URETA		19.90	19.90								
		2 Wire Copper Unbundled Sub-Loop Distribution - Zone 1	I	1	UEF	UCS2X	7.11	65.94	31.03	45.35	6.71						
		2 Wire Copper Unbundled Sub-Loop Distribution - Zone 2	I	2	UEF	UCS2X	9.83	65.94	31.03	45.35	6.71						
		2 Wire Copper Unbundled Sub-Loop Distribution - Zone 3	I	3	UEF	UCS2X	10.48	65.94	31.03	45.35	6.71						
		Order Coordination for Unbundled Sub-Loops, per sub-loop pair			UEF	USBMC		8.17	8.17								
		4 Wire Copper Unbundled Sub-Loop Distribution - Zone 1	I	1	UEF	UCS4X	7.85	79.21	44.29	49.82	9.09						
		4 Wire Copper Unbundled Sub-Loop Distribution - Zone 2	I	2	UEF	UCS4X	14.17	79.21	44.29	49.82	9.09						
		4 Wire Copper Unbundled Sub-Loop Distribution - Zone 3	I	3	UEF	UCS4X	12.64	79.21	44.29	49.82	9.09						
		Order Coordination for Unbundled Sub-Loops, per sub-loop pair			UEF	USBMC		8.17	8.17								
		Loop Testing - Basic 1st Half Hour			UEF	URET1		34.23	34.23								
		Loop Testing - Basic Additional Half Hour			UEF	URETA		19.90	19.90								
	Unbundled Network Terminating Wire (UNTW)																
		Unbundled Network Terminating Wire (UNTW) per Pair			UENTW	UENPP	0.3303	30.20	30.20								
	Network Interface Device (NID)																
		Network Interface Device (NID) - 1-2 lines			UENTW	UND12		43.68	28.79								
		Network Interface Device (NID) - 1-6 lines			UENTW	UND16		64.42	49.53								
		Network Interface Device Cross Connect - 2 W			UENTW	UNDC2		5.92	5.92								
		Network Interface Device Cross Connect - 4W			UENTW	UNDC4		5.92	5.92								
UNE OTHER, PROVISIONING ONLY - NO RATE																	
		NID - Dispatch and Service Order for NID installation			UENTW	UNDBX	0.00	0.00									
		UNTW Circuit Id Establishment, Provisioning Only - No Rate			UENTW	UENCE	0.00	0.00									
		Unbundled Contract Name, Provisioning Only - No Rate			UEANL,UEF,UEQ,UENTW	UNECN	0.00	0.00									
HIGH CAPACITY UNBUNDLED LOCAL LOOP																	
		High Capacity Unbundled Local Loop - DS3 - Per Mile per month			UE3	1L5ND	12.26										
		High Capacity Unbundled Local Loop - DS3 - Facility Termination per month			UE3	UE3PX	306.36	452.52	264.53	119.75	83.77						
		High Capacity Unbundled Local Loop - STS-1 - Per Mile per month			UDLSX	1L5ND	12.26										
		High Capacity Unbundled Local Loop - STS-1 - Facility Termination per month			UDLSX	UDLS1	313.49	452.52	264.53	119.75	83.77						
LOOP MAKE-UP																	
		Loop Makeup - Preordering Without Reservation, per working or spare facility queried (Manual).			UMK	UMKLW		24.04	24.04								
		Loop Makeup - Preordering With Reservation, per spare facility queried (Manual).			UMK	UMKLP		25.49	25.49								

UNBUNDLED NETWORK ELEMENTS - South Carolina														Attachment: 2		Exhibit: A	
CATEGORY		RATE ELEMENTS	Interim	Zone	BCS	USOC	RATES ($)					Svc Order Submitted Elec per LSR	Svc Order Submitted Manually per LSR	Incremental Charge - Manual Svc Order vs. Electronic-1st	Incremental Charge - Manual Svc Order vs. Electronic-Add'l	Incremental Charge - Manual Svc Order vs. Electronic-Disc 1st	Incremental Charge - Manual Svc Order vs. Electronic-Disc Add'l
							Rec	Nonrecurring		Nonrecurring Disconnect		OSS Rates ($)					
								First	Add'l	First	Add'l	SOMEC	SOMAN	SOMAN	SOMAN	SOMAN	SOMAN
		Loop Makeup--With or Without Reservation, per working or spare facility queried (Mechanized)			UMK	UMKMQ		0.34	0.34								
LINE SHARING AND LINE SPLITTING																	
	NOTE 1: The Line Sharing monthly recurring rates for all installations completed from October 02, 2003 through midnight October 01, 2004 shall be billed as follows:																
	NOTE 1: 10/02/2003 – 10/01/2004: 25% of the rate for an unbundled copper loop non-designed ("UCLND")																
	NOTE 1: 10/02/2004 – 10/01/2005: 50% of the rate for UCLND																
	NOTE 1: 10/02/2005 – 10/01/2006: 75% of the rate for UCLND																
	NOTE 1: Above will apply to USOCS: ULSDT and ULSCT																
	****NOTE 2: The Line Sharing monthly recurring rates with USOCs ULSDC and ULSCC applies only to circuits installed and inservice on or before October 1, 2003**																
	LINE SHARING																
	SPLITTERS-CENTRAL OFFICE BASED																
		Line Sharing Splitter, per System 96 Line Capacity			ULS	ULSDA	216.22	189.21	0.00	178.38	0.00						
		Line Sharing Splitter, per System 24 Line Capacity			ULS	ULSDB	54.05	189.21	0.00	178.38	0.00						
		Line Sharing Splitter, Per System, 8 Line Capacity			ULS	ULSD8	18.02	189.21	0.00	178.38	0.00						
		Line Sharing-DLEC Owned Splitter in CO-CFA activaton-deactivation (per LSOD)			ULS	ULSDG		86.67	0.00	49.95	0.00						
	END USER ORDERING-CENTRAL OFFICE BASED LINE SHARING																
		Line Sharing - per Line Activation (BST Owned splitter) - OBSOLETE see **NOTE 2			ULS	ULSDC	0.61	18.55	10.62	10.04	4.93						
		Line Share Service, TRO per line activation, BST owned splitter - Central Office Located (50% of UCLND) - please see NOTE 1 (E:10/2/2004)			ULS	ULSDT	6.47	18.55	10.62	10.04	4.93						
		Line Share Service, TRO per line activation, BST owned splitter - Central Office Located (75% of UCLND) - please see NOTE 1 (E:10/2/2005)			ULS	ULSDT	9.71	18.55	10.62	10.04	4.93						
		Line Sharing - per Subsequent Activity per Line Rearrangement(BST Owned Splitter)			ULS	ULSDS		16.42	8.21								
		Line Sharing - per Subsequent Activity per Line Rearrangement(DLEC Owned Splitter)			ULS	ULSCS		16.42	8.21								
		Line Sharing - per Line Activation (DLEC owned Splitter) - OBSOLETE see **NOTE 2			ULS	ULSCC	0.61	47.44	19.31	20.67	12.74						
		Line Share Service, TRO per line activation, CLEC owned splitter - Central Office Located (50% of UCLND) - please see NOTE 1 (E:10/2/2004)			ULS	ULSCT	6.47	47.44	19.31	20.67	12.74						
		Line Share Service, TRO per line activation, CLEC owned splitter - Central Office Located (75% of UCLND) - please see NOTE 1 (E:10/2/2005)			ULS	ULSCT	9.71	47.44	19.31	20.67	12.74						
	LINE SPLITTING																
	MAINTENANCE																
		No Trouble Found - per 1/2 hour increments - Basic						80.00	55.00								
		No Trouble Found - per 1/2 hour increments - Overtime						120.00	82.50								
		No Trouble Found - per 1/2 hour increments - Premium						160.00	110.00								
UNBUNDLED DEDICATED TRANSPORT																	
	INTEROFFICE CHANNEL - DEDICATED TRANSPORT																
		Interoffice Channel - Dedicated Transport - 2-Wire Voice Grade - Per Mile per month			U1TVX	1L5XX	0.0167										
		Interoffice Channel - Dedicated Transport- 2- Wire Voice Grade - Facility Termination			U1TVX	U1TV2	24.30	40.63	27.47	16.77	6.91						
		Interoffice Channel - Dedicated Transpor t- 2-Wire Voice Grade Rev Bat. - Per Mile per month			U1TVX	1L5XX	0.0167										
		Interoffice Channel - Dedicated Transport- 2- Wire VG Rev Bat. - Facility Termination			U1TVX	U1TR2	24.30	40.63	27.47	16.77	6.91						
		Interoffice Channel - Dedicated Transport - 4-Wire Voice Grade - Per Mile per month			U1TVX	1L5XX	0.0167										
		Interoffice Channel - Dedicated Transport - 4- Wire Voice Grade - Facility Termination			U1TVX	U1TV4	21.29	40.63	27.47	16.77	6.91						
		Interoffice Channel - Dedicated Transport - 56 kbps - per mile per month			U1TDX	1L5XX	0.0167										

UNBUNDLED NETWORK ELEMENTS - South Carolina														Attachment: 2		Exhibit: A	
CATEGORY		RATE ELEMENTS	Interim	Zone	BCS	USOC	RATES ($)					Svc Order Submitted Elec per LSR	Svc Order Submitted Manually per LSR	Incremental Charge - Manual Svc Order vs. Electronic-1st	Incremental Charge - Manual Svc Order vs. Electronic-Add'l	Incremental Charge - Manual Svc Order vs. Electronic-Disc 1st	Incremental Charge - Manual Svc Order vs. Electronic-Disc Add'l
							Rec	Nonrecurring		Nonrecurring Disconnect		OSS Rates ($)					
								First	Add'l	First	Add'l	SOMEC	SOMAN	SOMAN	SOMAN	SOMAN	SOMAN
		Interoffice Channel - Dedicated Transport - 56 kbps - Facility Termination			U1TDX	U1TD5	16.76	40.63	27.47	16.77	6.91						
		Interoffice Channel - Dedicated Transport - 64 kbps - per mile per month			U1TDX	1L5XX	0.0167										
		Interoffice Channel - Dedicated Transport - 64 kbps - Facility Termination			U1TDX	U1TD6	16.76	40.63	27.47	16.77	6.91						
		Interoffice Channel - Dedicated Channel - DS1 - Per Mile per month			U1TD1	1L5XX	0.3415										
		Interoffice Channel - Dedicated Tranport - DS1 - Facility Termination			U1TD1	U1TF1	77.14	89.47	81.99	16.39	14.48						
		Interoffice Channel - Dedicated Transport - DS3 - Per Mile per month			U1TD3	1L5XX	8.02										
		Interoffice Channel - Dedicated Transport - DS3 - Facility Termination per month			U1TD3	U1TF3	880.65	279.37	163.12	60.33	58.59						
		Interoffice Channel - Dedicated Transport - STS-1 - Per Mile per month			U1TS1	1L5XX	8.02										
		Interoffice Channel - Dedicated Transport - STS-1 - Facility Termination			U1TS1	U1TFS	880.55	279.37	163.12	60.33	58.59						
DARK FIBER																	
		Dark Fiber, Four Fiber Strands, Per Route Mile or Fraction Thereof per month - Interoffice Channel			UDF, UDFCX	1L5DF	36.41										
		NRC Dark Fiber - Interoffice Channel			UDF, UDFCX	UDF14		640.51	138.17	317.76	198.11						
		Dark Fiber, Four Fiber Strands, Per Route Mile or Fraction Thereof per month - Local Loop			UDF, UDFCX	1L5DL	97.65										
		NRC Dark Fiber - Local Loop			UDF, UDFCX	UDFL4		640.51	138.17	317.76	198.11						
SIGNALING (CCS7)																	
		CCS7 Signaling Termination, Per STP Port			UDB	PT8SX	163.49										
		CCS7 Signaling Connection, Per link (A link)			UDB	TPP6A	16.93	35.61	35.61	16.48	16.48						
		CCS7 Signaling Connection, Per link (B link) (also known as D link)			UDB	TPP6B	16.93	35.61	35.61	16.48	16.48						
		CCS7 Signaling Connection-A link, per month			UDB	TPP9A	16.93	35.61	35.61	16.48	16.48						
		CCS7 Signaling Connection-B link(also known as D link) per month			UDB	TPP9B	16.93	35.61	35.61	16.48	16.48						
		CCS7 Signaling Usage Surrogate, per link per LATA			UDB	STU56	791.37										
		CCS7 Signaling Point Code, per Originating Point Code Establishment or Change, per STP affected			UDB	CCAPO		29.08	29.08	35.65	35.65						
		CCS7 Signaling Point Code, per Destination Point Code Establishment or Change, Per Stp Affected			UDB	CCAPD		29.08	29.08	35.65	35.65						
E911 SERVICE																	
		Local Channel - Dedicated - 2-wr Voice Grade					15.33	193.53	33.24	36.72	3.21						
		Interoffice Transport - Dedicated - 2-wr Voice Grade Per Mile					0.0167										
		Interoffice Transport - Dedicated - 2-wr Voice Grade Per Facility Termination					24.30	40.63	27.47	16.77	6.91						
		Local Channel - Dedicated - DS1 - Zone 1					42.62	177.87	154.06	22.24	15.30						
		Local Channel - Dedicated - DS1 - Zone 2					70.32	177.87	154.06	22.24	15.30						
		Local Channel - Dedicated - DS1 - Zone 3					190.68	177.87	154.06	22.24	15.30						
		Interoffice Transport - Dedicated - DS1 Per Mile					0.3415										
		Interoffice Transport - Dedicated - DS1 Per Facility Termination					77.14	89.47	81.99	16.39	14.48						
SELECTIVE ROUTING																	
		Selective Routing Per Unique Line Class Code Per Request Per Switch						84.89	84.89	14.14	14.14						
ENHANCED EXTENDED LINK (EELs)																	
	NOTE: The monthly recurring and non-recurring charges below will apply and the Switch-As-Is Charge will not apply for UNE combinations provisioned as ' Ordinarily Combined' Network Elements.																
	NOTE: The monthly recurring and the Switch-As-Is Charge and not the non-recurring charges below will apply for UNE combinations provisioned as ' Currently Combined' Network Elements.																
	EXTENTED 2-WIRE VOICE GRADE EXTENDED LOOP WITH DEDICATED DS1 INTEROFFICE TRANSPORT																
		First 2-Wire VG Loop (SL2) in Combination - Zone 1		1	UNCVX	UEAL2	16.68	105.98	68.43	53.05	10.61						
		First 2-Wire VG Loop (SL2) in Combination - Zone 2		2	UNCVX	UEAL2	23.13	105.98	68.43	53.05	10.61						
		First 2-Wire VG Loop (SL2) in Combination - Zone 3		3	UNCVX	UEAL2	28.46	105.98	68.43	53.05	10.61						

UNBUNDLED NETWORK ELEMENTS - South Carolina														Attachment: 2		Exhibit: A	
CATEGORY		RATE ELEMENTS	Interim	Zone	BCS	USOC	RATES ($)					Svc Order Submitted Elec per LSR	Svc Order Submitted Manually per LSR	Incremental Charge - Manual Svc Order vs. Electronic-1st	Incremental Charge - Manual Svc Order vs. Electronic-Add'l	Incremental Charge - Manual Svc Order vs. Electronic-Disc 1st	Incremental Charge - Manual Svc Order vs. Electronic-Disc Add'l
							Rec	Nonrecurring		Nonrecurring Disconnect		OSS Rates ($)					
								First	Add'l	First	Add'l	SOMEC	SOMAN	SOMAN	SOMAN	SOMAN	SOMAN
		Interoffice Transport - Dedicated - DS1 combination - Per Mile per month			UNC1X	1L5XX	0.27										
		Interoffice Transport - Dedicated - DS1 combination - Facility Termination per month			UNC1X	U1TF1	61.71	89.47	81.99	16.39	14.48						
		1/0 Channelization System in combination Per Month			UNC1X	MQ1	107.57	91.24	62.71	10.56	9.81						
		Voice Grade COCI - Per Month			UNCVX	1D1VG	0.56	6.59	4.73	0.00	0.00						
		Each Additional 2-Wire VG Loop (SL 2) in Combination - Zone 1		1	UNCVX	UEAL2	16.68	105.98	68.43	53.05	10.61						
		Each Additional 2-Wire VG Loop (SL 2) in Combination - Zone 2		2	UNCVX	UEAL2	23.13	105.98	68.43	53.05	10.61						
		Each Additional 2-Wire VG Loop (SL 2) in Combination - Zone 3		3	UNCVX	UEAL2	28.46	105.98	68.43	53.05	10.61						
		Voice Grade COCI - Per Month			UNCVX	1D1VG	0.56	6.59	4.73	0.00	0.00						
		Nonrecurring Currently Combined Network Elements Switch -As-Is Charge			UNC1X	UNCCC		5.61	5.61	7.00	7.00						
	EXTENDED 4-WIRE VOICE GRADE EXTENDED LOOP WITH DEDICATED DS1 INTEROFFICE TRANSPORT																
		First 4-Wire Analog Voice Grade Loop in Combination - Zone 1		1	UNCVX	UEAL4	32.59	132.38	94.83	59.35	14.61						
		First 4-Wire Analog Voice Grade Loop in Combination - Zone 2		2	UNCVX	UEAL4	43.89	132.38	94.83	59.35	14.61						
		First 4-Wire Analog Voice Grade Loop in Combination - Zone 3		3	UNCVX	UEAL4	43.38	132.38	94.83	59.35	14.61						
		Interoffice Transport - Dedicated - DS1 combination - Per Mile Per Month			UNC1X	1L5XX	0.27										
		Interoffice Transport - Dedicated - DS1 - Facility Termination Per Month			UNC1X	U1TF1	61.71	89.47	81.99	16.39	14.48						
		1/0 Channel System in combination Per Month			UNC1X	MQ1	107.57	91.24	62.71	10.56	9.81						
		Voice Grade COCI in combination - per month			UNCVX	1D1VG	0.56	6.59	4.73	0.00	0.00						
		Additional 4-Wire Analog Voice Grade Loop in same DS1 Interoffice Transport Combination - Zone 1		1	UNCVX	UEAL4	32.59	132.38	94.83	59.35	14.61						
		Additional 4-Wire Analog Voice Grade Loop in same DS1 Interoffice Transport Combination - Zone 2		2	UNCVX	UEAL4	43.89	132.38	94.83	59.35	14.61						
		Additional 4-Wire Analog Voice Grade Loop in same DS1 Interoffice Transport Combination - Zone 3		3	UNCVX	UEAL4	43.38	132.38	94.83	59.35	14.61						
		Additional Voice Grade COCI in combination - per month			UNCVX	1D1VG	0.56	6.59	4.73	0.00	0.00						
		Nonrecurring Currently Combined Network Elements Switch -As-Is Charge			UNC1X	UNCCC		5.61	5.61	7.00	7.00						
	EXTENDED 4-WIRE 56 KBPS EXTENDED DIGITAL LOOP WITH DEDICATED DS1 INTEROFFICE TRANSPORT																
		First 4-Wire 56Kbps Digital Grade Loop in Combination - Zone 1		1	UNCDX	UDL56	29.93	126.66	89.12	59.35	14.61						
		First 4-Wire 56Kbps Digital Grade Loop in Combination - Zone 2		2	UNCDX	UDL56	33.99	126.66	89.12	59.35	14.61						
		First 4-Wire 56Kbps Digital Grade Loop in Combination - Zone 3		3	UNCDX	UDL56	34.74	126.66	89.12	59.35	14.61						
		Interoffice Transport - Dedicated - DS1 combination - Per Mile Per Month			UNC1X	1L5XX	0.27										
		Interoffice Transport - Dedicated - DS1 - combination Facility Termination Per Month			UNC1X	U1TF1	61.71	89.47	81.99	16.39	14.48						
		1/0 Channel System in combination Per Month			UNC1X	MQ1	107.57	91.24	62.71	10.56	9.81						
		OCU-DP COCI (data) per month (2.4-64kbs)			UNCDX	1D1DD	1.19	6.59	4.73	0.00	0.00						
		Additional 4-Wire 56Kbps Digital Grade Loop in same DS1 Interoffice Transport Combination - Zone 1		1	UNCDX	UDL56	29.93	126.66	89.12	59.35	14.61						
		Additional 4-Wire 56Kbps Digital Grade Loop in same DS1 Interoffice Transport Combination - Zone 2		2	UNCDX	UDL56	33.99	126.66	89.12	59.35	14.61						
		Additional 4-Wire 56Kbps Digital Grade Loop in same DS1 Interoffice Transport Combination - Zone 3		3	UNCDX	UDL56	34.74	126.66	89.12	59.35	14.61						
		Additional OCU-DP COCI (data) - in combination per month (2.4-64kbs)			UNCDX	1D1DD	1.19	6.59	4.73	0.00	0.00						

UNBUNDLED NETWORK ELEMENTS - South Carolina														Attachment: 2		Exhibit: A	
CATEGORY		RATE ELEMENTS	Interim	Zone	BCS	USOC	RATES ($)					Svc Order Submitted Elec per LSR	Svc Order Submitted Manually per LSR	Incremental Charge - Manual Svc Order vs. Electronic-1st	Incremental Charge - Manual Svc Order vs. Electronic-Add'l	Incremental Charge - Manual Svc Order vs. Electronic-Disc 1st	Incremental Charge - Manual Svc Order vs. Electronic-Disc Add'l
							Rec	Nonrecurring		Nonrecurring Disconnect		OSS Rates ($)					
								First	Add'l	First	Add'l	SOMEC	SOMAN	SOMAN	SOMAN	SOMAN	SOMAN
		Nonrecurring Currently Combined Network Elements Switch -As-Is Charge			UNC1X	UNCCC		5.61	5.61	7.00	7.00						
	EXTENDED 4-WIRE 64 KBPS EXTENDED DIGITAL LOOP WITH DEDICATED DS1 INTEROFFICE TRANSPORT																
		First 4-Wire 64Kbps Digital Grade Loop in Combination - Zone 1		1	UNCDX	UDL64	29.93	126.66	89.12	59.35	14.61						
		First 4-Wire 64Kbps Digital Grade Loop in Combination - Zone 2		2	UNCDX	UDL64	33.99	126.66	89.12	59.35	14.61						
		First 4-Wire 64Kbps Digital Grade Loop in Combination - Zone 3		3	UNCDX	UDL64	34.74	126.66	89.12	59.35	14.61						
		Interoffice Transport - Dedicated - DS1 combination - Per Mile Per Month			UNC1X	1L5XX	0.27										
		interoffice Transport - Dedicated - DS1 combination - Facility Termination Per Month			UNC1X	U1TF1	61.71	89.47	81.99	16.39	14.48						
		1/0 Channel System in combination Per Month			UNC1X	MQ1	107.57	91.24	62.71	10.56	9.81						
		OCU-DP COCI (data) - in combination - per month (2.4-64kbs)			UNCDX	1D1DD	1.19	6.59	4.73	0.00	0.00						
		Additional 4-Wire 64Kbps Digital Grade Loop in same DS1 Interoffice Transport Combination - Zone 1		1	UNCDX	UDL64	29.93	126.66	89.12	59.35	14.61						
		Additional 4-Wire 64Kbps Digital Grade Loop in same DS1 Interoffice Transport Combination - Zone 2		2	UNCDX	UDL64	33.99	126.66	89.12	59.35	14.61						
		Additional 4-Wire 64Kbps Digital Grade Loop in same DS1 Interoffice Transport Combination - Zone 3		3	UNCDX	UDL64	34.74	126.66	89.12	59.35	14.61						
		Additional OCU-DP COCI (data) - in combination - per month (2.4-64kbs)			UNCDX	1D1DD	1.19	6.59	4.73	0.00	0.00						
		Nonrecurring Currently Combined Network Elements Switch -As-Is Charge			UNC1X	UNCCC		5.61	5.61	7.00	7.00						
	EXTENDED 4-WIRE DS1 DIGITAL EXTENDED LOOP WITH DEDICATED DS1 INTEROFFICE TRANSPORT																
		4-Wire DS1 Digital Loop in Combination - Zone 1		1	UNC1X	USLXX	90.87	253.03	157.89	44.80	11.73						
		4-Wire DS1 Digital Loop in Combination - Zone 2		2	UNC1X	USLXX	155.43	253.03	157.89	44.80	11.73						
		4-Wire DS1 Digital Loop in Combination - Zone 3		3	UNC1X	USLXX	261.89	253.03	157.89	44.80	11.73						
		Interoffice Transport - Dedicated - DS1 combination - Per Mile Per Month			UNC1X	1L5XX	0.27										
		Interoffice Transport - Dedicated - DS1 combination - Facility Termination Per Month			UNC1X	U1TF1	61.71	89.47	81.99	16.39	14.48						
		Nonrecurring Currently Combined Network Elements Switch -As-Is Charge			UNC1X	UNCCC		5.61	5.61	7.00	7.00						
	EXTENDED 4-WIRE DS1 DIGITAL EXTENDED LOOP WITH DEDICATED DS3 INTEROFFICE TRANSPORT																
		First DS1Loop in Combination - Zone 1		1	UNC1X	USLXX	90.87	253.03	157.89	44.80	11.73						
		First DS1Loop in Combination - Zone 2		2	UNC1X	USLXX	155.43	253.03	157.89	44.80	11.73						
		First DS1Loop in Combination - Zone 3		3	UNC1X	USLXX	261.89	253.03	157.89	44.80	11.73						
		Interoffice Transport - Dedicated - DS3 combination - Per Mile Per Month			UNC3X	1L5XX	6.42										
		Interoffice Transport - Dedicated - DS3 - Facility Termination per month			UNC3X	U1TF3	704.52	279.37	163.12	60.33	58.59						
		3/1Channel System in combination per month			UNC3X	MQ3	144.02	178.54	94.18	33.33	31.90						
		DS1 COCI in combination per month			UNC1X	UC1D1	8.64	6.59	4.73	0.00	0.00						
		Additional DS1Loop in DS3 Interoffice Transport Combination - Zone 1		1	UNC1X	USLXX	90.87	253.03	157.89	44.80	11.73						
		Additional DS1Loop in DS3 Interoffice Transport Combination - Zone 2		2	UNC1X	USLXX	155.43	253.03	157.89	44.80	11.73						
		Additional DS1Loop in DS3 Interoffice Transport Combination - Zone 3		3	UNC1X	USLXX	261.89	253.03	157.89	44.80	11.73						
		Additoinal DS1 COCI in combination per month			UNC1X	UC1D1	8.64	6.59	4.73	0.00	0.00						
		Nonrecurring Currently Combined Network Elements Switch -As-Is Charge			UNC3X	UNCCC		5.61	5.61	7.00	7.00						
	EXTENDED 2-WIRE VOICE GRADE EXTENDED LOOP/ 4 WIRE VOICE GRADE INTEROFFICE TRANSPORT																
		2-WireVG Loop in combination - Zone 1		1	UNCVX	UEAL2	16.68	105.98	68.43	53.05	10.61						
		2-WireVG Loop in combination - Zone 2		2	UNCVX	UEAL2	23.13	105.98	68.43	53.05	10.61						
		2-WireVG Loop in combination - Zone 3		3	UNCVX	UEAL2	28.46	105.98	68.43	53.05	10.61						

UNBUNDLED NETWORK ELEMENTS - South Carolina														Attachment: 2		Exhibit: A	
CATEGORY		RATE ELEMENTS	Interim	Zone	BCS	USOC	RATES ($)					Svc Order Submitted Elec per LSR	Svc Order Submitted Manually per LSR	Incremental Charge - Manual Svc Order vs. Electronic-1st	Incremental Charge - Manual Svc Order vs. Electronic-Add'l	Incremental Charge - Manual Svc Order vs. Electronic-Disc 1st	Incremental Charge - Manual Svc Order vs. Electronic-Disc Add'l
							Rec	Nonrecurring		Nonrecurring Disconnect		OSS Rates ($)					
								First	Add'l	First	Add'l	SOMEC	SOMAN	SOMAN	SOMAN	SOMAN	SOMAN
		Interoffice Transport - 2-wire VG - Dedicated- Per Mile Per Month			UNCVX	1L5XX	0.0134										
		Interoffice Transport - 2-wire VG - Dedicated - Facility Termination per month			UNCVX	U1TV2	19.44	40.63	27.47	16.77	6.91						
		Nonrecurring Currently Combined Network Elements Switch -As-Is Charge			UNCVX	UNCCC		5.61	5.61	7.00	7.00						
	EXTENDED 4-WIRE VOICE GRADE EXTENDED LOOP/ 4 WIRE VOICE GRADE INTEROFFICE TRANSPORT																
		4-WireVG Loop in combination - Zone 1		1	UNCVX	UEAL4	32.59	132.38	94.83	59.35	14.61						
		4-WireVG Loop in combination - Zone 2		2	UNCVX	UEAL4	43.89	132.38	94.83	59.35	14.61						
		4-WireVG Loop in combination - Zone 3		3	UNCVX	UEAL4	43.38	132.38	94.83	59.35	14.61						
		Interoffice Transport - 4-wire VG - Dedicated - Per Mile Per Month			UNCVX	1L5XX	0.0134										
		Interoffice Transport - 4-wire VG - Dedicated - Facility Termination per month			UNCVX	U1TV4	17.03	40.63	27.47	16.77	6.91						
		Nonrecurring Currently Combined Network Elements Switch -As-Is Charge			UNCVX	UNCCC		5.61	5.61	7.00	7.00						
	EXTENDED DS3 DIGITAL EXTENDED LOOP WITH DEDICATED DS3 INTEROFFICE TRANSPORT																
		DS3 Local Loop in combination - per mile per month			UNC3X	1L5ND	12.26										
		DS3 Local Loop in combination - Facility Termination per month			UNC3X	UE3PX	306.36	452.52	264.53	119.75	83.77						
		Interoffice Transport - Dedicated - DS3 - Per Mile per month			UNC3X	1L5XX	6.42										
		Interoffice Transport - Dedicated - DS3 combination - Facility Termination per month			UNC3X	U1TF3	704.52	279.37	163.12	60.33	58.59						
		Nonrecurring Currently Combined Network Elements Switch -As-Is Charge			UNC3X	UNCCC		5.61	5.61	7.00	7.00						
	EXTENDED STS-1 DIGITAL EXTENDED LOOP WITH DEDICATED STS-1 INTEROFFICE TRANSPORT																
		STS-1 Local Lolp in combination - per mile per month			UNCSX	1L5ND	12.26										
		STS-1 Local Loop in combination - Facility Termination per month			UNCSX	UDLS1	313.49	452.52	264.53	119.75	83.77						
		Interoffice Transport - Dedicated - STS-1 combination - per mile per month			UNCSX	1L5XX	6.42										
		Interoffice Transport - Dedicated - STS-1 combination - Facility Termination per month			UNCSX	U1TFS	704.44	279.37	163.12	60.33	58.59						
		Nonrecurring Currently Combined Network Elements Switch -As-Is Charge			UNCSX	UNCCC		5.61	5.61	7.00	7.00						
	EXTENDED 2-WIRE ISDN EXTENDED LOOP WITH DS1 INTEROFFICE TRANSPORT																
		First 2-Wire ISDN Loop in Combination - Zone 1		1	UNCNX	U1L2X	25.21	117.58	80.03	53.05	10.61						
		First 2-Wire ISDN Loop in Combination - Zone 2		2	UNCNX	U1L2X	32.76	117.58	80.03	53.05	10.61						
		First 2-Wire ISDN Loop in Combination - Zone 3		3	UNCNX	U1L2X	37.70	117.58	80.03	53.05	10.61						
		Interoffice Transport - Dedicated - DS1 combination - per mile per month			UNC1X	1L5XX	0.27										
		Interoffice Transport - Dedicated - DS1 combination - Facility Termination per month			UNC1X	U1TF1	61.71	89.47	81.99	16.39	14.48						
		1/0 Channel System in combination - per month			UNC1X	MQ1	107.57	91.24	62.71	10.56	9.81						
		2-wire ISDN COCI (BRITE) - in combination - per month			UNCNX	UC1CA	2.56	6.59	4.73	0.00	0.00						
		Additional 2-wire ISDN Loop in same DS1Interoffice Transport Combination - Zone 1		1	UNCNX	U1L2X	25.21	117.58	80.03	53.05	10.61						
		Additional 2-wire ISDN Loop in same DS1Interoffice Transport Combination - Zone 2		2	UNCNX	U1L2X	32.76	117.58	80.03	53.05	10.61						
		Additional 2-wire ISDN Loop in same DS1Interoffice Transport Combination - Zone 3		3	UNCNX	U1L2X	37.70	117.58	80.03	53.05	10.61						
		Additional 2-wire ISDN COCI (BRITE) - in combination- per month			UNCNX	UC1CA	2.56	6.59	4.73	0.00	0.00						
		Nonrecurring Currently Combined Network Elements Switch -As-Is Charge			UNC1X	UNCCC		5.61	5.61	7.00	7.00						
	EXTENDED 4-WIRE DS1 DIGITAL EXTENDED LOOP WITH DEDICATED STS-1 INTEROFFICE TRANSPORT																
		First DS1 Loop Combination - Zone 1		1	UNC1X	USLXX	90.87	253.03	157.89	44.80	11.73						
		First DS1 Loop Combination - Zone 2		2	UNC1X	USLXX	155.43	253.03	157.89	44.80	11.73						
		First DS1 Loop Combination - Zone 3		3	UNC1X	USLXX	261.89	253.03	157.89	44.80	11.73						

UNBUNDLED NETWORK ELEMENTS - South Carolina														Attachment: 2		Exhibit: A	
CATEGORY		RATE ELEMENTS	Interim	Zone	BCS	USOC	RATES ($)					Svc Order Submitted Elec per LSR	Svc Order Submitted Manually per LSR	Incremental Charge - Manual Svc Order vs. Electronic-1st	Incremental Charge - Manual Svc Order vs. Electronic-Add'l	Incremental Charge - Manual Svc Order vs. Electronic-Disc 1st	Incremental Charge - Manual Svc Order vs. Electronic-Disc Add'l
							Rec	Nonrecurring		Nonrecurring Disconnect		OSS Rates ($)					
								First	Add'l	First	Add'l	SOMEC	SOMAN	SOMAN	SOMAN	SOMAN	SOMAN
		Interoffice Transport - Dedicated - STS-1 combination - Per Mile Per Month			UNCSX	1L5XX	6.42										
		Interoffice Transport - Dedicated - STS-1 combination - Facility Termination per month			UNCSX	U1TFS	704.44	279.37	163.12	60.33	58.59						
		3/1 Channel System in combination per month			UNCSX	MQ3	144.02	178.54	94.18	33.33	31.90						
		DS1 COCI in combination per month			UNC1X	UC1D1	8.64	6.59	4.73	0.00	0.00						
		Additional DS1Loop in the same STS-1 Interoffice Transport Combination - Zone 1		1	UNC1X	USLXX	90.87	253.03	157.89	44.80	11.73						
		Additional DS1Loop in the same STS-1 Interoffice Transport Combination - Zone 2		2	UNC1X	USLXX	155.43	253.03	157.89	44.80	11.73						
		Additional DS1Loop in the same STS-1 Interoffice Transport Combination - Zone 3		3	UNC1X	USLXX	261.89	253.03	157.89	44.80	11.73						
		DS1 COCI in combination per month			UNC1X	UC1D1	8.64	6.59	4.73	0.00	0.00						
		Nonrecurring Currently Combined Network Elements Switch -As-Is Charge			UNCSX	UNCCC		5.61	5.61	7.00	7.00						
	EXTENDED 4-WIRE 56 KBPS DIGITAL EXTENDED LOOP WITH 56 KBPS INTEROFFICE TRANSPORT																
		4-wire 56 kbps Local Loop in combination - Zone 1		1	UNCDX	UDL56	29.93	126.66	89.12	59.35	14.61						
		4-wire 56 kbps Local Loop in combination - Zone 2		2	UNCDX	UDL56	33.99	126.66	89.12	59.35	14.61						
		4-wire 56 kbps Local Loop in combination - Zone 3		3	UNCDX	UDL56	34.74	126.66	89.12	59.35	14.61						
		Interoffice Transport - Dedicated - 4-wire 56 kbps combination - Per Mile per month			UNCDX	1L5XX	0.0134										
		Interoffice Transport - Dedicated - 4-wire 56 kbps combination - Facility Termination per month			UNCDX	U1TD5	13.41	40.63	27.47	16.77	6.91						
		Nonrecurring Currently Combined Network Elements Switch -As-Is Charge			UNCDX	UNCCC		5.61	5.61	7.00	7.00						
	EXTENDED 4-WIRE 64 KBPS DIGITAL EXTENDED LOOP WITH 64 KBPS INTEROFFICE TRANSPORT																
		4-wire 64 kbps Lcoal Loop in Combination - Zone 1		1	UNCDX	UDL64	29.93	126.66	89.12	59.35	14.61						
		4-wire 64 kbps Lcoal Loop in Combination - Zone 2		2	UNCDX	UDL64	33.99	126.66	89.12	59.35	14.61						
		4-wire 64 kbps Lcoal Loop in Combination - Zone 3		3	UNCDX	UDL64	34.74	126.66	89.12	59.35	14.61						
		Interoffice Transport - Dedicated - 4-wire 64 kbps combination - Per Mile per month			UNCDX	1L5XX	0.0134										
		Interoffice Transport - Dedicated - 4-wire 64 kbps combination - Facility Termination per month			UNCDX	U1TD6	13.41	40.63	27.47	16.77	6.91						
		Nonrecurring Currently Combined Network Elements Switch -As-Is Charge			UNCDX	UNCCC		5.61	5.61	7.00	7.00						
	EXTENDED 2-WIRE VOICE GRADE LOOP WITH DS1 INTEROFFICE TRANSPORT w/ 3/1 MUX																
		First 2-wire VG Loop (SL2) in Combination - Zone 1		1	UNCVX	UEAL2	16.68	105.98	68.43	53.05	10.61						
		First 2-wire VG Loop (SL2) in Combination - Zone 2		2	UNCVX	UEAL2	23.13	105.98	68.43	53.05	10.61						
		First 2-wire VG Loop (SL2) in Combination - Zone 3		3	UNCVX	UEAL2	28.46	105.98	68.43	53.05	10.61						
		First Interoffice Transport - Dedicated - DS1 combination - Per Mile			UNC1X	1L5XX	0.27										
		First Interoffice Transport - Dedicated - DS1 combination - Facility Termination per month			UNC1X	U1TF1	61.71	89.47	81.99	16.39	14.48						
		Per each DS1 Channelization System Per Month			UNC1X	MQ1	107.57	91.24	62.71	10.56	9.81						
		Per each Voice Grade COCI - Per Month per month			UNCVX	1D1VG	0.56	6.59	4.73	0.00	0.00						
		3/1 Channel System in combination per month			UNC3X	MQ3	144.02	178.54	94.18	33.33	31.90						
		Per each DS1 COCI in combination per month			UNC1X	UC1D1	8.64	6.59	4.73	0.00	0.00						
		Each Additional 2-Wire VG Loop(SL 2) in the same DS1 Interoffice Transport Combination - Zone 1		1	UNCVX	UEAL2	16.68	105.98	68.43	53.05	10.61						
		Each Additional 2-Wire VG Loop(SL2) in the same DS1 Interoffice Transport Combination - Zone 2		2	UNCVX	UEAL2	23.13	105.98	68.43	53.05	10.61						
		Each Additional 2-Wire VG Loop(SL2) in the same DS1 Interoffice Transport Combination - Zone 3		3	UNCVX	UEAL2	28.46	105.98	68.43	53.05	10.61						
		Each Additional Voice Grade COCI in combination - per month			UNCVX	1D1VG	0.56	6.59	4.73	0.00	0.00						
		Each Additional DS1 Interoffice Channel per mile in same 3/1 Channel System per month			UNC1X	1L5XX	0.27										
		Each Additional DS1 Interoffice Channel Facility Termination in same 3/1 Channel System per month			UNC1X	U1TF1	61.71	89.47	81.99	16.39	14.48						
		Each Additional DS1 COCI combination per month			UNC1X	UC1D1	8.64	6.59	4.73	0.00	0.00						

UNBUNDLED NETWORK ELEMENTS - South Carolina														Attachment: 2		Exhibit: A	
CATEGORY		RATE ELEMENTS	Interim	Zone	BCS	USOC	RATES ($)					Svc Order Submitted Elec per LSR	Svc Order Submitted Manually per LSR	Incremental Charge - Manual Svc Order vs. Electronic-1st	Incremental Charge - Manual Svc Order vs. Electronic-Add'l	Incremental Charge - Manual Svc Order vs. Electronic-Disc 1st	Incremental Charge - Manual Svc Order vs. Electronic-Disc Add'l
							Rec	Nonrecurring		Nonrecurring Disconnect		OSS Rates ($)					
								First	Add'l	First	Add'l	SOMEC	SOMAN	SOMAN	SOMAN	SOMAN	SOMAN
		Nonrecurring Currently Combined Network Elements Switch -As-Is Charge			UNC1X	UNCCC		5.61	5.61	7.00	7.00						
	EXTENDED 4-WIRE 56 KBPS DIGITAL LOOP WITH DEDICATED DS1 INTEROFFICE TRANSPORT w/ 3/1 MUX																
		First 4-Wire Analog Voice Grade Local Loop in Combination - Zone 1		1	UNCVX	UEAL4	32.59	132.38	94.83	59.35	14.61						
		First 4-Wire Analog Voice Grade Local Loop in Combination - Zone 2		2	UNCVX	UEAL4	43.89	132.38	94.83	59.35	14.61						
		First 4-Wire Analog Voice Grade Local Loop in Combination - Zone 3		3	UNCVX	UEAL4	43.38	132.38	94.83	59.35	14.61						
		First Interoffice Transport - Dedicated - DS1 combination - Per Mile Per Month			UNC1X	1L5XX	0.27										
		First Interoffice Transport - Dedicated - DS1 - Facility Termination Per Month			UNC1X	U1TF1	61.71	89.47	81.99	16.39	14.48						
		Per each 1/0 Channel System in combination Per Month			UNC1X	MQ1	107.57	91.24	62.71	10.56	9.81						
		Per each Voice Grade COCI in combination - per month			UNCVX	1D1VG	0.56	6.59	4.73	0.00	0.00						
		3/1 Channel System in combination per month			UNC3X	MQ3	144.02	178.54	94.18	33.33	31.90						
		Per each DS1 COCI in combination per month			UNC1X	UC1D1	8.64	6.59	4.73	0.00	0.00						
		Additional 4-Wire Analog Voice Grade Loop in same DS1 Interoffice Transport Combination - Zone 1		1	UNCVX	UEAL4	32.59	132.38	94.83	59.35	14.61						
		Additional 4-Wire Analog Voice Grade Loop in same DS1 Interoffice Transport Combination - Zone 2		2	UNCVX	UEAL4	43.89	132.38	94.83	59.35	14.61						
		Additional 4-Wire Analog Voice Grade Loop in same DS1 Interoffice Transport Combination - Zone 3		3	UNCVX	UEAL4	43.38	132.38	94.83	59.35	14.61						
		Each Additional DS1 Interoffice Channel per mile in same 3/1 Channel System per month			UNC1X	1L5XX	0.27										
		Each Additional DS1 Interoffice Channel Facility Termination in same 3/1 Channel System per month			UNC1X	U1TF1	61.71	89.47	81.99	16.39	14.48						
		Additional Voice Grade COCI - in combination - per month			UNCVX	1D1VG	0.56	6.59	4.73	0.00	0.00						
		Nonrecurring Currently Combined Network Elements Switch -As-Is Charge			UNC1X	UNCCC		5.61	5.61	7.00	7.00						
	EXTENDED 4-WIRE 56 KBPS DIGITAL LOOP WITH DEDICATED DS1 INTEROFFICE TRANSPORT w/ 3/1 MUX																
		First 4-Wire 56Kbps Digital Grade Local Loop in Combination - Zone 1		1	UNCDX	UDL56	29.93	126.66	89.12	59.35	14.61						
		First 4-Wire 56Kbps Digital Grade Local Loop in Combination - Zone 2		2	UNCDX	UDL56	33.99	126.66	89.12	59.35	14.61						
		First 4-Wire 56Kbps Digital Grade Local Loop in Combination - Zone 3		3	UNCDX	UDL56	34.74	126.66	89.12	59.35	14.61						
		First Interoffice Transport - Dedicated - DS1 combination - Per Mile Per Month			UNC1X	1L5XX	0.27										
		First Interoffice Transport - Dedicated - DS1 - combination Facility Termination Per Month			UNC1X	U1TF1	61.71	89.47	81.99	16.39	14.48						
		Per each 1/0 Channel System in combination Per Month			UNC1X	MQ1	107.57	91.24	62.71	10.56	9.81						
		Per each OCU-DP COCI (data) COCI per month (2.4-64kbs)			UNCDX	1D1DD	1.19	6.59	4.73	0.00	0.00						
		3/1 Channel System in combination per month			UNC3X	MQ3	144.02	178.54	94.18	33.33	31.90						
		Per each DS1 COCI in combination per month			UNC1X	UC1D1	8.64	6.59	4.73	0.00	0.00						
		Additional 4-Wire 56Kbps Digital Grade Loop in same DS1 Interoffice Transport Combination - Zone 1		1	UNCDX	UDL56	29.93	126.66	89.12	59.35	14.61						
		Additional 4-Wire 56Kbps Digital Grade Loop in same DS1 Interoffice Transport Combination - Zone 2		2	UNCDX	UDL56	33.99	126.66	89.12	59.35	14.61						
		Additional 4-Wire 56Kbps Digital Grade Loop in same DS1 Interoffice Transport Combination - Zone 3		3	UNCDX	UDL56	34.74	126.66	89.12	59.35	14.61						
		OCU-DP COCI (data) COCI in combination per month (2.4-64kbs)			UNCDX	1D1DD	1.19	6.59	4.73	0.00	0.00						
		Each Additional DS1 Interoffice Channel per mile in same 3/1 Channel System per month			UNC1X	1L5XX	0.27										
		Each Additional DS1 Interoffice Channel Facility Termination in same 3/1 Channel System per month			UNC1X	U1TF1	61.71	89.47	81.99	16.39	14.48						
		Each Additional DS1 COCI in the same 3/1 channel system combination per month			UNC1X	UC1D1	8.64	6.59	4.73	0.00	0.00						

UNBUNDLED NETWORK ELEMENTS - South Carolina														Attachment: 2		Exhibit: A	
CATEGORY		RATE ELEMENTS	Interim	Zone	BCS	USOC	RATES ($)					Svc Order Submitted Elec per LSR	Svc Order Submitted Manually per LSR	Incremental Charge - Manual Svc Order vs. Electronic-1st	Incremental Charge - Manual Svc Order vs. Electronic-Add'l	Incremental Charge - Manual Svc Order vs. Electronic-Disc 1st	Incremental Charge - Manual Svc Order vs. Electronic-Disc Add'l
							Rec	Nonrecurring		Nonrecurring Disconnect		OSS Rates ($)					
								First	Add'l	First	Add'l	SOMEC	SOMAN	SOMAN	SOMAN	SOMAN	SOMAN
		Nonrecurring Currently Combined Network Elements Switch -As-Is Charge			UNC1X	UNCCC		5.61	5.61	7.00	7.00						
	EXTENDED 4-WIRE 64 KBPS DIGITAL LOOP WITH DEDICATED DS1 INTEROFFICE TRANSPORT w/ 3/1 MUX																
		First 4-Wire 64Kbps Digital Grade Loop in a DS1 Interoffice Transport Combination - Zone 1		1	UNCDX	UDL64	29.93	126.66	89.12	59.35	14.61						
		First 4-Wire 64Kbps Digital Grade Loop in a DS1 Interoffice Transport Combination - Zone 2		2	UNCDX	UDL64	33.99	126.66	89.12	59.35	14.61						
		First 4-Wire 64Kbps Digital Grade Loop in a DS1 Interoffice Transport Combination - Zone 3		3	UNCDX	UDL64	34.74	126.66	89.12	59.35	14.61						
		First Interoffice Transport - Dedicated - DS1 combination - Per Mile Per Month			UNC1X	1L5XX	0.27										
		First Interoffice Transport - Dedicated - DS1 combination - Facility Termination Per Month			UNC1X	U1TF1	61.71	89.47	81.99	16.39	14.48						
		Per each Channel System 1/0 in combination Per Month			UNC1X	MQ1	107.57	91.24	62.71	10.56	9.81						
		Per each OCU-DP COCI (data) in combination - per month (2.4-64kbs)			UNCDX	1D1DD	1.19	6.59	4.73	0.00	0.00						
		3/1 Channel System in combination per month			UNC3X	MQ3	144.02	178.54	94.18	33.33	31.90						
		Per each DS1 COCI in combination per month			UNC1X	UC1D1	8.64	6.59	4.73	0.00	0.00						
		Additional 4-Wire 64Kbps Digital Grade Loop in same DS1 Interoffice Transport Combination - Zone 1		1	UNCDX	UDL64	29.93	126.66	89.12	59.35	14.61						
		Additional 4-Wire 64Kbps Digital Grade Loop in same DS1 Interoffice Transport Combination - Zone 2		2	UNCDX	UDL64	33.99	126.66	89.12	59.35	14.61						
		Additional 4-Wire 64Kbps Digital Grade Loop in same DS1 Interoffice Transport Combination - Zone 3		3	UNCDX	UDL64	34.74	126.66	89.12	59.35	14.61						
		Additional OCU-DP COCI (data) - DS1 to DS0 Channel System combination - per month (2.4-64kbs)			UNCDX	1D1DD	1.19	6.59	4.73	0.00	0.00						
		Each Additional DS1 Interoffice Channel per mile in same 3/1 Channel System per month			UNC1X	1L5XX	0.27										
		Each Additional DS1 Interoffice Channel Facility Termination in same 3/1 Channel System per month			UNC1X	U1TF1	61.71	89.47	81.99	16.39	14.48						
		Each Additional DS1 COCI in the same 3/1 channel system combination per month			UNC1X	UC1D1	8.64	6.59	4.73	0.00	0.00						
		Nonrecurring Currently Combined Network Elements Switch -As-Is Charge			UNC1X	UNCCC		5.61	5.61	7.00	7.00						
	EXTENDED 2-WIRE ISDN LOOP WITH DS1 INTEROFFICE TRANSPORT w/ 3/1 MUX																
		First 2-Wire ISDN Loop in a DS1 Interoffice Combination Transport - Zone 1		1	UNCNX	U1L2X	25.21	117.58	80.03	53.05	10.61						
		First 2-Wire ISDN Loop in a DS1 Interoffice Combination Transport - Zone 2		2	UNCNX	U1L2X	32.76	117.58	80.03	53.05	10.61						
		First 2-Wire ISDN Loop in a DS1 Interoffice Combination Transport - Zone 3		3	UNCNX	U1L2X	37.70	117.58	80.03	53.05	10.61						
		First Interoffice Transport - Dedicated - DS1 combination - Per Mile per month			UNC1X	1L5XX	0.27										
		First Interoffice Transport - Dedicated - DS1 combination - Facility Termination per month			UNC1X	U1TF1	61.71	89.47	81.99	16.39	14.48						
		Per each Channel System 1/0 in combination - per month			UNC1X	MQ1	107.57	91.24	62.71	10.56	9.81						
		Per each 2-wire ISDN COCI (BRITE) in combination - per month			UNCNX	UC1CA	2.56	6.59	4.73	0.00	0.00						
		3/1 Channel System in combination per month			UNC3X	MQ3	144.02	178.54	94.18	33.33	31.90						
		Per each DS1 COCI in combination per month			UNC1X	UC1D1	8.64	6.59	4.73	0.00	0.00						
		Additional 2-wire ISDN Loop in same DS1Interoffice Transport Combination - Zone 1		1	UNCNX	U1L2X	25.21	117.58	80.03	53.05	10.61						
		Additional 2-wire ISDN Loop in same DS1Interoffice Transport Combination - Zone 2		2	UNCNX	U1L2X	32.76	117.58	80.03	53.05	10.61						
		Additional 2-wire ISDN Loop in same DS1Interoffice Transport Combination - Zone 3		3	UNCNX	U1L2X	37.70	117.58	80.03	53.05	10.61						
		Additional 2-wire ISDN COCI (BRITE) in same 1/0 channel system combination- per month			UNCNX	UC1CA	2.56	6.59	4.73	0.00	0.00						

UNBUNDLED NETWORK ELEMENTS - South Carolina														Attachment: 2		Exhibit: A	
CATEGORY		RATE ELEMENTS	Interim	Zone	BCS	USOC	RATES ($)					Svc Order Submitted Elec per LSR	Svc Order Submitted Manually per LSR	Incremental Charge - Manual Svc Order vs. Electronic-1st	Incremental Charge - Manual Svc Order vs. Electronic-Add'l	Incremental Charge - Manual Svc Order vs. Electronic-Disc 1st	Incremental Charge - Manual Svc Order vs. Electronic-Disc Add'l
							Rec	Nonrecurring		Nonrecurring Disconnect		OSS Rates ($)					
								First	Add'l	First	Add'l	SOMEC	SOMAN	SOMAN	SOMAN	SOMAN	SOMAN
		Each Additional DS1 Interoffice Channel per mile in same 3/1 Channel System per month			UNC1X	1L5XX	0.27										
		Each Additional DS1 Interoffice Channel Facility Termination in same 3/1 Channel System per month			UNC1X	U1TF1	61.71	89.47	81.99	16.39	14.48						
		Each Additional DS1 COCI in the same 3/1 channel system combination per month			UNC1X	UC1D1	8.64	6.59	4.73	0.00	0.00						
		Nonrecurring Currently Combined Network Elements Switch -As-Is Charge			UNC1X	UNCCC		5.61	5.61	7.00	7.00						
	EXTENDED 4-WIRE DS1 LOOP WITH DEDICATED DS1 INTEROFFICE TRANSPORT w/ 3/1 MUX																
		First 4-wire DS1 Digital Lcoal Loop in Combination - Zone 1		1	UNC1X	USLXX	90.87	253.03	157.89	44.80	11.73						
		First 4-wire DS1 Digital Lcoal Loop in Combination - Zone 2		2	UNC1X	USLXX	155.43	253.03	157.89	44.80	11.73						
		First 4-wire DS1 Digital Lcoal Loop in Combination - Zone 3		3	UNC1X	USLXX	261.89	253.03	157.89	44.80	11.73						
		First Interoffice Transport - Dedicated - DS1 combination - Per Mile Per Month			UNC1X	1L5XX	0.27										
		First Interoffice Transport - Dedicated - DS1 combination - Facility Termination Per Month			UNC1X	U1TF1	61.71	89.47	81.99	16.39	14.48						
		3/1 Channel System in combination per month			UNC3X	MQ3	144.02	178.54	94.18	33.33	31.90						
		Per each DS1 COCI combination per month			UNC1X	UC1D1	8.64	6.59	4.73	0.00	0.00						
		Each Additional DS1 Interoffice Channel per mile in same 3/1 Channel System per month			UNC1X	1L5XX	0.27										
		Each Additional DS1 Interoffice Channel Facility Termination in same 3/1 Channel System per month			UNC1X	U1TF1	61.71	89.47	81.99	16.39	14.48						
		Each Additional DS1 COCI in the same 3/1 channel system combination per month			UNC1X	UC1D1	8.64	6.59	4.73	0.00	0.00						
		Additional 4-Wire DS1 Digital Local Loop in Combination - Zone 1		1	UNC1X	USLXX	90.87	253.03	157.89	44.80	11.73						
		Additional 4-Wire DS1 Digital Local Loop in Combination - Zone 2		2	UNC1X	USLXX	155.43	253.03	157.89	44.80	11.73						
		Additional 4-Wire DS1 Digital Local Loop in Combination - Zone 3		3	UNC1X	USLXX	261.89	253.03	157.89	44.80	11.73						
		Nonrecurring Currently Combined Network Elements Switch -As-Is Charge			UNC1X	UNCCC		5.61	5.61	7.00	7.00						
	EXTENDED 4-WIRE 56 KBPS DIGITAL EXTENDED LOOP WITH DS0 INTEROFFICE TRANSPORT																
		First 4-wire 56 kbps Local Loop in combination - Zone 1		1	UNCDX	UDL56	29.93	126.66	89.12	59.35	14.61						
		First 4-wire 56 kbps Local Loop in combination - Zone 2		2	UNCDX	UDL56	33.99	126.66	89.12	59.35	14.61						
		First 4-wire 56 kbps Local Loop in combination - Zone 3		3	UNCDX	UDL56	34.74	126.66	89.12	59.35	14.61						
		First 4-wiree 56 kbps Interoffice Transport - Dedicated - Per Mile per month			UNCDX	1L5XX	0.0134										
		First 4-wire 56 kbps Interoffice Transport - Dedicated - Facility Termination per month			UNCDX	U1TD5	13.41	40.63	27.47	16.77	6.91						
		Nonrecurring Currently Combined Network Elements Switch -As-Is Charge			UNCDX	UNCCC		5.61	5.61	7.00	7.00						
	EXTENDED 4-WIRE 64 KBPS DIGITAL EXTENDED LOOP WITH DS0 INTEROFFICE TRANSPORT																
		First 4-wire 64 kbps Local Loop in combination - Zone 1		1	UNCDX	UDL64	29.93	126.66	89.12	59.35	14.61						
		First 4-wire 64 kbps Local Loop in combination - Zone 2		2	UNCDX	UDL64	33.99	126.66	89.12	59.35	14.61						
		First 4-wire 64 kbps Local Loop in combination - Zone 3		3	UNCDX	UDL64	34.74	126.66	89.12	59.35	14.61						
		First I4-wire 65 kbps Interoffice Transport - Dedicated - Per Mile per month			UNCDX	1L5XX	0.0134										
		First 4-wire 64 kbps Interoffice Transport - Dedicated - Facility Termination per month			UNCDX	U1TD6	13.41	40.63	27.47	16.77	6.91						
		Nonrecurring Currently Combined Network Elements Switch -As-Is Charge			UNCDX	UNCCC		5.61	5.61	7.00	7.00						
ADDITIONAL NETWORK ELEMENTS																	
	When used as a part of a currently combined facility, the non-recurrng charges do not apply, but a Switch As Is charge does apply.																
	When used as ordinarily combined network elements in All States, the non-recurring charges apply and the Switch As Is Charge does not.																
	Nonrecurring Currently Combined Network Elements "Switch As Is" Charge (One applies to each combination)																
		Nonrecurring Currently Combined Network Elements Switch -As-Is Charge - 2 wire/4-Wire VG			UNCVX	UNCCC		5.61	5.61	7.00	7.00						

UNBUNDLED NETWORK ELEMENTS - South Carolina														Attachment: 2		Exhibit: A	
CATEGORY		RATE ELEMENTS	Interim	Zone	BCS	USOC	RATES ($)					Svc Order Submitted Elec per LSR	Svc Order Submitted Manually per LSR	Incremental Charge - Manual Svc Order vs. Electronic-1st	Incremental Charge - Manual Svc Order vs. Electronic-Add'l	Incremental Charge - Manual Svc Order vs. Electronic-Disc 1st	Incremental Charge - Manual Svc Order vs. Electronic-Disc Add'l
							Rec	Nonrecurring		Nonrecurring Disconnect		OSS Rates ($)					
								First	Add'l	First	Add'l	SOMEC	SOMAN	SOMAN	SOMAN	SOMAN	SOMAN
		Nonrecurring Currently Combined Network Elements Switch -As-Is Charge - 56/64 kbps			UNCDX	UNCCC		5.61	5.61	7.00	7.00						
	MULTIPLEXERS																
		DS1 to DS0 Channel System per month			UNC1X	MQ1	107.57	91.24	62.71	10.56	9.81						
		OCU-DP COCI (data) - DS1 to DS0 Channel System - per month (2.4-64kbs) used for a Local Loop			UDL	1D1DD	1.19	6.59	4.73								
		OCU-DP COCI (data) - DS1 to DS0 Channel System - per month (2.4-64kbs) used for connection to a channelized DS1 Local Channel in the same SWC as collocation			U1TUD	1D1DD	1.19	6.59	4.73								
		2-wire ISDN COCI (BRITE) - DS1 to DS0 Channel Systsem - per month for a Local Loop			UDN	UC1CA	2.56	6.59	4.73								
		2-wire ISDN COCI (BRITE) - DS1 to DS0 Channel Systsem - per month used for connection to a channelized DS1 Local Channel in the same SWC as collocation			U1TUB	UC1CA	2.56	6.59	4.73								
		Voice Grade COCI - DS1 to DS0 Channel System - per month used for a Local Loop			UEA	1D1VG	0.56	6.59	4.73								
		Voice Grade COCI - DS1 to DS0 Channel System - per month used for connection to a channelized DS1 Local Channel in the same SWC as collocation			U1TUC	1D1VG	0.56	6.59	4.73								
		DS3 to DS1 Channel System per month			UNC3X	MQ3	144.02	178.54	94.18	33.33	31.90						
		STS-1 to DS1 Channel System per month			UNCSX	MQ3	144.02	178.54	94.18	33.33	31.90						
		DS1 COCI used with Loop per month			USL	UC1D1	8.64	6.59	4.73								
		DS1 COCI (used for connection to a channelized DS1 Local Channel in the same SWC as collocation) per month			U1TUA	UC1D1	8.64	6.59	4.73								
		DS1 COCI used with Interoffice Channel per month			U1TD1	UC1D1	8.64	6.59	4.73								
		DS3 Interface Unit (DS1 COCI) used with Local Channel per month			ULDD1	UC1D1	8.64	6.59	4.73								

UNBUNDLED NETWORK ELEMENTS - Tennessee													Attachment: 2		Exhibit: A	
CATEGORY	RATE ELEMENTS	Interim	Zone	BCS	USOC	RATES ($)					Svc Order Submitted Elec per LSR	Svc Order Submitted Manually per LSR	Incremental Charge - Manual Svc Order vs. Electronic-1st	Incremental Charge - Manual Svc Order vs. Electronic-Add'l	Incremental Charge - Manual Svc Order vs. Electronic-Disc 1st	Incremental Charge - Manual Svc Order vs. Electronic-Disc Add'l
						Rec	Nonrecurring		Nonrecurring Disconnect		OSS Rates ($)					
							First	Add'l	First	Add'l	SOMEC	SOMAN	SOMAN	SOMAN	SOMAN	SOMAN
	The "Zone" shown in the sections for stand-alone loops or loops as part of a combination refers to Geographically Deaveraged UNE Zones. To view Geographically Deaveraged UNE Zone Designations by Central Office, refer to internet Website: http://www.interconnection.bellsouth.com/become_a_clec/html/interconnection.htm															
OPERATIONAL SUPPORT SYSTEMS (OSS) - "REGIONAL RATES"																
	NOTE: (1) CLEC should contact its contract negotiator if it prefers the "state specific" OSS charges as ordered by the State Commissions. The OSS charges currently contained in this rate exhibit are the BellSouth "regional" service ordering charges. CLEC may elect either the state specific Commission ordered rates for the service ordering charges, or CLEC may elect the regional service ordering charge, however, CLEC can not obtain a mixture of the two regardless if CLEC has a interconnection contract established in each of the 9 states.															
	NOTE: (2) Any element that can be ordered electronically will be billed according to the SOMEC rate listed in this category. Please refer to BellSouth's Local Ordering Handbook (LOH) to determine if a product can be ordered electronically. For those elements that cannot be ordered electronically at present per the LOH, the listed SOMEC rate in this category reflects the charge that would be billed to a CLEC once electronic ordering capabilities come on-line for that element. Otherwise, the manual ordering charge, SOMAN, will be applied to a CLECs bill when it submits an LSR to BellSouth.															
	NOTE: (3) OSS - Manual Service Order Charge, Per Element - UNE Only **Please see applicable rate element for SOMAN charge**															
	OSS - Electronic Service Order Charge, Per Local Service Request (LSR) - UNE Only				SOMEC		3.50	0.00	3.50	0.00						
UNE SERVICE DATE ADVANCEMENT CHARGE																
	NOTE: The Expedite charge will be maintained commensurate with BellSouth's FCC No.1 Tariff, Section 5 as applicable.															
	UNE Expedite Charge per Circuit or Line Assignable USOC, per Day			UAL, UEANL, UCL, UEF, UDF, UEQ, UDL, UENTW, UDN, UEA, UHL, ULC, USL, U1T12, U1T48, U1TD1, U1TD3, U1TDX, U1TO3, U1TS1, U1TVX, UC1BC, UC1BL, UC1CC, UC1CL, UC1DC, UC1DL, UC1EC, UC1EL, UC1FC, UC1FL, UC1GC, UC1GL, UC1HC, UC1HL, UDL12, UDL48, UDLO3, UDLSX, UE3, ULD12, ULD48, ULDD1, ULDD3, ULDDX, ULDO3, ULDS1, ULDVX, UNC1X, UNC3X, UNCDX, UNCNX, UNCSX, UNCVX, UNLD1, UNLD3, UXTD1, UXTD3, UXTS1, U1TUC, U1TUD, U1TUB, U1TUA	SDASP		200.00									
UNBUNDLED EXCHANGE ACCESS LOOP																
	2-WIRE ANALOG VOICE GRADE LOOP															
	2-Wire Analog Voice Grade Loop - Service Level 1- Zone 1		1	UEANL	UEAL2	13.19	31.99	20.02	10.65	1.41			20.35	10.54	13.32	13.32
	2-Wire Analog Voice Grade Loop - Service Level 1- Zone 2		2	UEANL	UEAL2	17.23	31.99	20.02	10.65	1.41			20.35	10.54	13.32	13.32
	2-Wire Analog Voice Grade Loop - Service Level 1- Zone 3		3	UEANL	UEAL2	22.53	31.99	20.02	10.65	1.41			20.35	10.54	13.32	13.32
	2-Wire Analog Voice Grade Loop - Service Level 1- Zone 1		1	UEANL	UEASL	13.19	31.99	20.02	10.65	1.41			20.35	10.54	13.32	13.32
	2-Wire Analog Voice Grade Loop - Service Level 1- Zone 2		2	UEANL	UEASL	17.23	31.99	20.02	10.65	1.41			20.35	10.54	13.32	13.32
	2-Wire Analog Voice Grade Loop - Service Level 1- Zone 3		3	UEANL	UEASL	22.53	31.99	20.02	10.65	1.41			20.35	10.54	13.32	13.32
	Unbundled Miscellaneous Rate Element, Tag Loop at End User Premise			UEANL	URETL		8.33	0.83					20.35	10.54	13.32	13.32
	Loop Testing - Basic 1st Half Hour			UEANL	URET1		78.92	78.92					20.35	10.54	13.32	13.32
	Loop Testing - Basic Additional Half Hour			UEANL	URETA		23.33	23.33					20.35	10.54	13.32	13.32
	CLEC to CLEC Conversion Charge Without Outside Dispatch (UVL-SL1)			UEANL	UREWO		15.80	8.95					20.35	10.54	13.32	13.32

UNBUNDLED NETWORK ELEMENTS - Tennessee														Attachment: 2		Exhibit: A	
CATEGORY		RATE ELEMENTS	Interim	Zone	BCS	USOC	RATES ($)					Svc Order Submitted Elec per LSR	Svc Order Submitted Manually per LSR	Incremental Charge - Manual Svc Order vs. Electronic-1st	Incremental Charge - Manual Svc Order vs. Electronic-Add'l	Incremental Charge - Manual Svc Order vs. Electronic-Disc 1st	Incremental Charge - Manual Svc Order vs. Electronic-Disc Add'l
							Rec	Nonrecurring		Nonrecurring Disconnect		OSS Rates ($)					
								First	Add'l	First	Add'l	SOMEC	SOMAN	SOMAN	SOMAN	SOMAN	SOMAN
		Unbundled Voice Loop, Non-Design Voice Loop, billing for BST providing make-up (Engineering Information - E.I.)			UEANL	UEANM		28.80	28.80								
		Manual Order Coordination for UVL-SL1s (per loop)			UEANL	UEAMC		36.52	36.52								
		Order Coordination for Specified Conversion Time for UVL-SL1 (per LSR)			UEANL	OCOSL		34.29	34.29								
	2-WIRE Unbundled COPPER LOOP																
		2-Wire Unbundled Copper Loop - Non-Designed Zone 1		1	UEQ	UEQ2X	13.19	31.99	20.02	10.65	1.41			20.35	10.54	13.32	13.32
		2 Wire Unbundled Copper Loop - Non-Designed - Zone 2		2	UEQ	UEQ2X	17.23	31.99	20.02	10.65	1.41			20.35	10.54	13.32	13.32
		2 Wire Unbundled Copper Loop - Non-Designed - Zone 3		3	UEQ	UEQ2X	22.53	31.99	20.02	10.65	1.41			20.35	10.54	13.32	13.32
		Unbundled Miscellaneous Rate Element, Tag Loop at End User Premise			UEQ	URETL		8.33	0.83					20.35	10.54	13.32	13.32
		Manual Order Coordination 2 Wire Unbundled Copper Loop - Non-Designed (per loop)			UEQ	USBMC		36.52	36.52								
		Unbundled Copper Loop, Non-Design Copper Loop, billing for BST providing make-up (Engineering Information - E.I.)			UEQ	UEQMU		28.80	28.80					20.35	10.54	13.32	13.32
		Loop Testing - Basic 1st Half Hour			UEQ	URET1		78.92	78.92					20.35	10.54	13.32	13.32
		Loop Testing - Basic Additional Half Hour			UEQ	URETA		23.33	23.33					20.35	10.54	13.32	13.32
		CLEC to CLEC Conversion Charge Without Outside Dispatch (UCL-ND)			UEQ	UREWO		14.29	7.44					20.35	10.54	13.32	13.32
UNBUNDLED EXCHANGE ACCESS LOOP																	
	2-WIRE ANALOG VOICE GRADE LOOP																
		2-Wire Analog Voice Grade Loop - Service Level 2 w/Loop or Ground Start Signaling - Zone 1		1	UEA	UEAL2	16.56	75.06	48.20	28.70	17.64			20.35	10.54	13.32	13.32
		2-Wire Analog Voice Grade Loop - Service Level 2 w/Loop or Ground Start Signaling - Zone 2		2	UEA	UEAL2	21.63	75.06	48.20	28.70	17.64			20.35	10.54	13.32	13.32
		2-Wire Analog Voice Grade Loop - Service Level 2 w/Loop or Ground Start Signaling - Zone 3		3	UEA	UEAL2	28.28	75.06	48.20	28.70	17.64			20.35	10.54	13.32	13.32
		Order Coordination for Specified Conversion Time (per LSR)			UEA	OCOSL		34.29									
		2-Wire Analog Voice Grade Loop - Service Level 2 w/Reverse Battery Signaling - Zone 1		1	UEA	UEAR2	16.56	75.06	48.20	28.70	17.64			20.35	10.54	13.32	13.32
		2-Wire Analog Voice Grade Loop - Service Level 2 w/Reverse Battery Signaling - Zone 2		2	UEA	UEAR2	21.63	75.06	48.20	28.70	17.64			20.35	10.54	13.32	13.32
		2-Wire Analog Voice Grade Loop - Service Level 2 w/Reverse Battery Signaling - Zone 3		3	UEA	UEAR2	28.28	75.06	48.20	28.70	17.64			20.35	10.54	13.32	13.32
		Order Coordination for Specified Conversion Time (per LSR)			UEA	OCOSL		34.29									
		CLEC to CLEC Conversion Charge without outside dispatch			UEA	UREWO		75.06	36.41					20.35	10.54	13.32	13.32
		Loop Tagging - Service Level 2 (SL2)			UEA	URETL		11.23	1.10					20.35	10.54	13.32	13.32
	4-WIRE ANALOG VOICE GRADE LOOP																
		4-Wire Analog Voice Grade Loop - Zone 1		1	UEA	UEAL4	24.70	122.76	85.57	76.35	39.16			20.35	10.54	13.32	13.32
		4-Wire Analog Voice Grade Loop - Zone 2		2	UEA	UEAL4	32.25	122.76	85.57	76.35	39.16			20.35	10.54	13.32	13.32
		4-Wire Analog Voice Grade Loop - Zone 3		3	UEA	UEAL4	42.17	122.76	85.57	76.35	39.16			20.35	10.54	13.32	13.32
		Order Coordination for Specified Conversion Time (per LSR)			UEA	OCOSL		34.29									
		CLEC to CLEC Conversion Charge without outside dispatch			UEA	UREWO		75.06	36.41					20.35	10.54	13.32	13.32
	2-WIRE ISDN DIGITAL GRADE LOOP																
		2-Wire ISDN Digital Grade Loop - Zone 1		1	UDN	U1L2X	22.22	142.76	88.88	76.35	39.16			20.35	10.54	13.32	13.32
		2-Wire ISDN Digital Grade Loop - Zone 2		2	UDN	U1L2X	29.02	142.76	88.88	76.35	39.16			20.35	10.54	13.32	13.32
		2-Wire ISDN Digital Grade Loop - Zone 3		3	UDN	U1L2X	37.95	142.76	88.88	76.35	39.16			20.35	10.54	13.32	13.32
		Order Coordination For Specified Conversion Time (per LSR)			UDN	OCOSL		34.29									
		CLEC to CLEC Conversion Charge without outside dispatch			UDN	UREWO		91.77	44.22					20.35	10.54	13.32	13.32
	2-WIRE ASYMMETRICAL DIGITAL SUBSCRIBER LINE (ADSL) COMPATIBLE LOOP																
		2 Wire Unbundled ADSL Loop including manual service inquiry & facility reservation - Zone 1		1	UAL	UAL2X	13.82	270.01	234.63	74.54	39.14			20.35	10.54	13.32	13.32
		2 Wire Unbundled ADSL Loop including manual service inquiry & facility reservation - Zone 2		2	UAL	UAL2X	18.05	270.01	234.63	74.54	39.14			20.35	10.54	13.32	13.32
		2 Wire Unbundled ADSL Loop including manual service inquiry & facility reservation - Zone 3		3	UAL	UAL2X	23.60	270.01	234.63	74.54	39.14			20.35	10.54	13.32	13.32
		Order Coordination for Specified Conversion Time (per LSR)			UAL	OCOSL		34.29									
		2 Wire Unbundled ADSL Loop without manual service inquiry & facility reservaton - Zone 1	I	1	UAL	UAL2W	13.82	31.99	20.02	10.65	1.41			20.35	10.54	13.32	13.32

UNBUNDLED NETWORK ELEMENTS - Tennessee														Attachment: 2		Exhibit: A	
CATEGORY		RATE ELEMENTS	Interim	Zone	BCS	USOC	RATES ($)					Svc Order Submitted Elec per LSR	Svc Order Submitted Manually per LSR	Incremental Charge - Manual Svc Order vs. Electronic-1st	Incremental Charge - Manual Svc Order vs. Electronic-Add'l	Incremental Charge - Manual Svc Order vs. Electronic-Disc 1st	Incremental Charge - Manual Svc Order vs. Electronic-Disc Add'l
							Rec	Nonrecurring		Nonrecurring Disconnect		OSS Rates ($)					
								First	Add'l	First	Add'l	SOMEC	SOMAN	SOMAN	SOMAN	SOMAN	SOMAN
		2 Wire Unbundled ADSL Loop without manual service inquiry & facility reservaton - Zone 2	I	2	UAL	UAL2W	18.05	31.99	20.02	10.65	1.41			20.35	10.54	13.32	13.32
		2 Wire Unbundled ADSL Loop without manual service inquiry & facility reservaton - Zone 3	I	3	UAL	UAL2W	23.60	31.99	20.02	10.65	1.41			20.35	10.54	13.32	13.32
		Order Coordination for Specified Conversion Time (per LSR)			UAL	OCOSL		34.29									
		CLEC to CLEC Conversion Charge without outside dispatch	I		UAL	UREWO		31.99	20.02					20.35	10.54	13.32	13.32
	2-WIRE HIGH BIT RATE DIGITAL SUBSCRIBER LINE (HDSL) COMPATIBLE LOOP																
		2 Wire Unbundled HDSL Loop including manual service inquiry & facility reservation - Zone 1		1	UHL	UHL2X	10.83	270.01	234.63	74.54	39.14			20.35	10.54	13.32	13.32
		2 Wire Unbundled HDSL Loop including manual service inquiry & facility reservation - Zone 2		2	UHL	UHL2X	14.15	270.01	234.63	74.54	39.14			20.35	10.54	13.32	13.32
		2 Wire Unbundled HDSL Loop including manual service inquiry & facility reservation - Zone 3		3	UHL	UHL2X	18.50	270.01	234.63	74.54	39.14			20.35	10.54	13.32	13.32
		Order Coordination for Specified Conversion Time (per LSR)			UHL	OCOSL		34.29									
		2 Wire Unbundled HDSL Loop without manual service inquiry and facility reservation - Zone 1	I	1	UHL	UHL2W	10.83	31.99	20.02	10.65	1.41			20.35	10.54	13.32	13.32
		2 Wire Unbundled HDSL Loop without manual service inquiry and facility reservation - Zone 2	I	2	UHL	UHL2W	14.15	31.99	20.02	10.65	1.41			20.35	10.54	13.32	13.32
		2 Wire Unbundled HDSL Loop without manual service inquiry and facility reservation - Zone 3	I	3	UHL	UHL2W	18.50	31.99	20.02	10.65	1.41			20.35	10.54	13.32	13.32
		Order Coordination for Specified Conversion Time (per LSR)			UHL	OCOSL		34.29									
		CLEC to CLEC Conversion Charge without outside dispatch	I		UHL	UREWO		31.99	20.02					20.35	10.54	13.32	13.32
	4-WIRE HIGH BIT RATE DIGITAL SUBSCRIBER LINE (HDSL) COMPATIBLE LOOP																
		4 Wire Unbundled HDSL Loop including manual service inquiry and facility reservation - Zone 1		1	UHL	UHL4X	13.93	279.60	244.22	74.54	39.14			20.35	10.54	13.32	13.32
		4-Wire Unbundled HDSL Loop including manual service inquiry and facility reservation - Zone 2		2	UHL	UHL4X	18.20	279.60	244.22	74.54	39.14			20.35	10.54	13.32	13.32
		4-Wire Unbundled HDSL Loop including manual service inquiry and facility reservation - Zone 3		3	UHL	UHL4X	23.80	279.60	244.22	74.54	39.14			20.35	10.54	13.32	13.32
		Order Coordination for Specified Conversion Time (per LSR)			UHL	OCOSL		34.29									
		4-Wire Unbundled HDSL Loop without manual service inquiry and facility reservation - Zone 1	I	1	UHL	UHL4W	13.93	31.99	20.02	10.65	1.41			20.35	10.54	13.32	13.32
		4-Wire Unbundled HDSL Loop without manual service inquiry and facility reservation - Zone 2	I	2	UHL	UHL4W	18.20	31.99	20.02	10.65	1.41			20.35	10.54	13.32	13.32
		4-Wire Unbundled HDSL Loop without manual service inquiry and facility reservation - Zone 3	I	3	UHL	UHL4W	23.80	31.99	20.02	10.65	1.41			20.35	10.54	13.32	13.32
		Order Coordination for Specified Conversion Time (per LSR)			UHL	OCOSL		34.29									
		CLEC to CLEC Conversion Charge without outside dispatch	I		UHL	UREWO		31.99	20.02					20.35	10.54	13.32	13.32
	4-WIRE DS1 DIGITAL LOOP																
		4-Wire DS1 Digital Loop - Zone 1		1	USL, NTCD1	USLXX	57.73	313.08	219.72	96.86	40.45			18.98	8.43	11.95	11.95
		4-Wire DS1 Digital Loop - Zone 2		2	USL, NTCD1	USLXX	75.40	313.08	219.72	96.86	40.45			18.98	8.43	11.95	11.95
		4-Wire DS1 Digital Loop - Zone 3		3	USL, NTCD1	USLXX	98.59	313.08	219.72	96.86	40.45			18.98	8.43	11.95	11.95
		Order Coordination for Specified Conversion Time (per LSR)			USL, NTCD1	OCOSL		34.59									
		CLEC to CLEC Conversion Charge without outside dispatch			USL, NTCD1	UREWO		130.47	40.11					20.35	10.54	13.32	13.32
	4-WIRE 19.2, 56 OR 64 KBPS DIGITAL GRADE LOOP																
		4 Wire Unbundled Digital 19.2 Kbps		1	UDL	UDL19	31.10	207.01	141.38	90.70	44.18			20.35	10.54	13.32	13.32
		4 Wire Unbundled Digital 19.2 Kbps		2	UDL	UDL19	40.61	207.01	141.38	90.70	44.18			20.35	10.54	13.32	13.32
		4 Wire Unbundled Digital 19.2 Kbps		3	UDL	UDL19	53.11	207.01	141.38	90.70	44.18			20.35	10.54	13.32	13.32
		4 Wire Unbundled Digital Loop 56 Kbps - Zone 1		1	UDL	UDL56	31.10	207.01	141.38	90.70	44.18			20.35	10.54	13.32	13.32
		4 Wire Unbundled Digital Loop 56 Kbps - Zone 2		2	UDL	UDL56	40.61	207.01	141.38	90.70	44.18			20.35	10.54	13.32	13.32
		4 Wire Unbundled Digital Loop 56 Kbps - Zone 3		3	UDL	UDL56	53.11	207.01	141.38	90.70	44.18			20.35	10.54	13.32	13.32
		Order Coordination for Specified Conversion Time (per LSR)			UDL	OCOSL		34.29									
		4 Wire Unbundled Digital Loop 64 Kbps - Zone 1		1	UDL	UDL64	31.10	207.01	141.38	90.70	44.18			20.35	10.54	13.32	13.32
		4 Wire Unbundled Digital Loop 64 Kbps - Zone 2		2	UDL	UDL64	40.61	207.01	141.38	90.70	44.18			20.35	10.54	13.32	13.32
		4 Wire Unbundled Digital Loop 64 Kbps - Zone 3		3	UDL	UDL64	53.11	207.01	141.38	90.70	44.18			20.35	10.54	13.32	13.32
		Order Coordination for Specified Conversion Time (per LSR)			UDL	OCOSL		34.29									
		CLEC to CLEC Conversion Charge without outside dispatch			UDL	UREWO		102.28	49.82					20.35	10.54	13.32	13.32
	2-WIRE Unbundled COPPER LOOP																

UNBUNDLED NETWORK ELEMENTS - Tennessee														Attachment: 2		Exhibit: A	
CATEGORY		RATE ELEMENTS	Interim	Zone	BCS	USOC	RATES ($)					Svc Order Submitted Elec per LSR	Svc Order Submitted Manually per LSR	Incremental Charge - Manual Svc Order vs. Electronic-1st	Incremental Charge - Manual Svc Order vs. Electronic-Add'l	Incremental Charge - Manual Svc Order vs. Electronic-Disc 1st	Incremental Charge - Manual Svc Order vs. Electronic-Disc Add'l
							Rec	Nonrecurring		Nonrecurring Disconnect		OSS Rates ($)					
								First	Add'l	First	Add'l	SOMEC	SOMAN	SOMAN	SOMAN	SOMAN	SOMAN
		2-Wire Unbundled Copper Loop-Designed including manual service inquiry & facility reservation - Zone 1	I	1	UCL	UCLPB	13.19	31.99	20.02	10.65	1.41			20.35	10.54	13.32	13.32
		2-Wire Unbundled Copper Loop-Designed including manual service inquiry & facility reservation - Zone 2	I	2	UCL	UCLPB	17.23	31.99	20.02	10.65	1.41			20.35	10.54	13.32	13.32
		2 Wire Unbundled Copper Loop-Designed including manual service inquiry & facility reservation - Zone 3	I	3	UCL	UCLPB	22.53	31.99	20.02	10.65	1.41			20.35	10.54	13.32	13.32
		Order Coordination for Unbundled Copper Loops (per loop)			UCL	UCLMC		36.52	36.52								
		2-Wire Unbundled Copper Loop-Designed without manual service inquiry and facility reservation - Zone 1	I	1	UCL	UCLPW	13.19	31.99	20.02	10.65	1.41			20.35	10.54	13.32	13.32
		2-Wire Unbundled Copper Loop-Designed without manual service inquiry and facility reservation - Zone 2	I	2	UCL	UCLPW	17.23	31.99	20.02	10.65	1.41			20.35	10.54	13.32	13.32
		2-Wire Unbundled Copper Loop-Designed without manual service inquiry and facility reservation - Zone 3	I	3	UCL	UCLPW	22.53	31.99	20.02	10.65	1.41			20.35	10.54	13.32	13.32
		Order Coordination for Unbundled Copper Loops (per loop)			UCL	UCLMC		36.52	36.52								
		CLEC to CLEC Conversion Charge without outside dispatch (UCL-Des)	I		UCL	UREWO		31.99	20.02					20.35	10.54	13.32	13.32
	4-WIRE COPPER LOOP																
		4-Wire Copper Loop-Designed including manual service inquiry and facility reservation - Zone 1	I	1	UCL	UCL4S	24.70	122.76	85.57	76.35	39.16			20.35	10.54	13.32	13.32
		4-Wire Copper Loop-Designed including manual service inquiry and facility reservation - Zone 2	I	2	UCL	UCL4S	32.25	122.76	85.57	76.35	39.16			20.35	10.54	13.32	13.32
		4-Wire Copper Loop-Designed including manual service inquiry and facility reservation - Zone 3	I	3	UCL	UCL4S	42.17	122.76	85.57	76.35	39.16			20.35	10.54	13.32	13.32
		Order Coordination for Unbundled Copper Loops (per loop)			UCL	UCLMC		36.52	36.52								
		4-Wire Copper Loop-Designed without manual service inquiry and facility reservation - Zone 1	I	1	UCL	UCL4W	24.70	122.76	85.57	76.35	39.16			20.35	10.54	13.32	13.32
		4-Wire Copper Loop-Designed without manual service inquiry and facility reservation - Zone 2	I	2	UCL	UCL4W	32.25	122.76	85.57	76.35	39.16			20.35	10.54	13.32	13.32
		4-Wire Copper Loop-Designed without manual service inquiry and facility reservation - Zone 3	I	3	UCL	UCL4W	42.17	122.76	85.57	76.35	39.16			20.35	10.54	13.32	13.32
		Order Coordination for Unbundled Copper Loops (per loop)			UCL	UCLMC		36.52	36.52								
		CLEC to CLEC Conversion Charge without outside dispatch (UCL-Des)	I		UCL	UREWO		31.99	20.02					20.35	10.54	13.32	13.32
LOOP MODIFICATION																	
		Unbundled Loop Modification, Removal of Load Coils - 2 Wire pair less than or equal to 18k ft, per Unbundled Loop			UAL, UHL, UCL, UEQ, ULS, UEA, UEANL, UEPSR, UEPSB	ULM2L		65.40	65.40					20.35	10.54	13.32	13.32
		Unbundled Loop Modification Removal of Load Coils - 4 Wire less than or equal to 18K ft, per Unbundled Loop			UHL, UCL, UEA	ULM4L		65.40	65.40					20.35	10.54	13.32	13.32
		Unbundled Loop Modification Removal of Bridged Tap Removal, per unbundled loop	I		UAL, UHL, UCL, UEQ, ULS, UEA, UEANL, UEPSR, UEPSB	ULMBT		65.44	65.44					20.35	10.54	13.32	13.32
SUB-LOOPS																	
	Sub-Loop Distribution																
		Sub-Loop - Per Cross Box Location - CLEC Feeder Facility Set-Up	I		UEANL	USBSA		517.25	517.25					20.35	10.54	13.32	13.32
		Sub-Loop - Per Cross Box Location - Per 25 Pair Panel Set-Up	I		UEANL	USBSB		42.68	42.68					20.35	10.54	13.32	13.32
		Sub-Loop - Per Building Equipment Room - CLEC Feeder Facility Set-Up	I		UEANL	USBSC		313.01	313.01					20.35	10.54	13.32	13.32
		Sub-Loop - Per Building Equipment Room - Per 25 Pair Panel Set-Up	I		UEANL	USBSD		108.06	108.06					20.35	10.54	13.32	13.32
		Sub-Loop Distribution Per 2-Wire Analog Voice Grade Loop - Statewide		sw	UEANL	USBN2	10.02	148.84	112.34	73.14	36.65			20.35	10.54	13.32	13.32
		Order Coordination for Unbundled Sub-Loops, per sub-loop pair			UEANL	USBMC		34.29	34.29								

UNBUNDLED NETWORK ELEMENTS - Tennessee														Attachment: 2		Exhibit: A	
CATEGORY		RATE ELEMENTS	Interim	Zone	BCS	USOC	RATES ($)					Svc Order Submitted Elec per LSR	Svc Order Submitted Manually per LSR	Incremental Charge - Manual Svc Order vs. Electronic-1st	Incremental Charge - Manual Svc Order vs. Electronic-Add'l	Incremental Charge - Manual Svc Order vs. Electronic-Disc 1st	Incremental Charge - Manual Svc Order vs. Electronic-Disc Add'l
							Rec	Nonrecurring		Nonrecurring Disconnect		OSS Rates ($)					
								First	Add'l	First	Add'l	SOMEC	SOMAN	SOMAN	SOMAN	SOMAN	SOMAN
		Sub-Loop Distribution Per 4-Wire Analog Voice Grade Loop - Zone 1		1	UEANL	USBN4	7.30	147.93	75.11	99.96	16.98			20.35	10.54	13.32	13.32
		Sub-Loop Distribution Per 4-Wire Analog Voice Grade Loop - Zone 2		2	UEANL	USBN4	9.54	147.93	75.11	99.96	16.98			20.35	10.54	13.32	13.32
		Sub-Loop Distribution Per 4-Wire Analog Voice Grade Loop - Zone 3		3	UEANL	USBN4	12.47	147.93	75.11	99.96	16.98			20.35	10.54	13.32	13.32
		Order Coordination for Unbundled Sub-Loops, per sub-loop pair			UEANL	USBMC		34.29	34.29								
		Sub-Loop 2-Wire Intrabuilding Network Cable (INC)	I		UEANL	USBR2	1.35	94.56	29.35					20.35	10.54	13.32	13.32
		Order Coordination for Unbundled Sub-Loops, per sub-loop pair			UEANL	USBMC		34.29	34.29								
		Sub-Loop 4-Wire Intrabuilding Network Cable (INC)	I		UEANL	USBR4	2.26	116.14	37.10					20.35	10.54	13.32	13.32
		Order Coordination for Unbundled Sub-Loops, per sub-loop pair			UEANL	USBMC		34.29	34.29								
		Loop Testing - Basic 1st Half Hour			UEANL	URET1		78.92	78.92								
		Loop Testing - Basic Additional Half Hour			UEANL	URETA		23.33	23.33								
		2 Wire Copper Unbundled Sub-Loop Distribution - Zone 1	I	1	UEF	UCS2X	5.16	110.71	37.89	94.41	13.09			20.35	10.54	13.32	13.32
		2 Wire Copper Unbundled Sub-Loop Distribution - Zone 2	I	2	UEF	UCS2X	6.74	110.71	37.89	94.41	13.09			20.35	10.54	13.32	13.32
		2 Wire Copper Unbundled Sub-Loop Distribution - Zone 3	I	3	UEF	UCS2X	8.81	110.71	37.89	94.41	13.09			20.35	10.54	13.32	13.32
		Order Coordination for Unbundled Sub-Loops, per sub-loop pair			UEF	USBMC		34.29	34.29								
		4 Wire Copper Unbundled Sub-Loop Distribution - Zone 1	I	1	UEF	UCS4X	6.52	117.12	44.30	99.96	16.98			20.35	10.54	13.32	13.32
		4 Wire Copper Unbundled Sub-Loop Distribution - Zone 2	I	2	UEF	UCS4X	8.52	117.12	44.30	99.96	16.98			20.35	10.54	13.32	13.32
		4 Wire Copper Unbundled Sub-Loop Distribution - Zone 3	I	3	UEF	UCS4X	11.14	117.12	44.30	99.96	16.98			20.35	10.54	13.32	13.32
		Order Coordination for Unbundled Sub-Loops, per sub-loop pair			UEF	USBMC		34.29	34.29								
		Loop Testing - Basic 1st Half Hour			UEF	URET1		78.92	78.92								
		Loop Testing - Basic Additional Half Hour			UEF	URETA		23.33	23.33								
	Unbundled Network Terminating Wire (UNTW)																
		Unbundled Network Terminating Wire (UNTW) per Pair	I		UENTW	UENPP	0.4555	2.48	2.48					20.35	10.54	13.32	13.32
	Network Interface Device (NID)																
		Network Interface Device (NID) - 1-2 lines			UENTW	UND12		89.69	54.56	0.6391	0.6391			20.35	10.54	13.32	13.32
		Network Interface Device (NID) - 1-6 lines			UENTW	UND16		129.65	94.51	0.6522	0.6522			20.35	10.54	13.32	13.32
		Network Interface Device Cross Connect - 2 W			UENTW	UNDC2		11.11	11.11					20.35	10.54	13.32	13.32
		Network Interface Device Cross Connect - 4W			UENTW	UNDC4		11.11	11.11					20.35	10.54	13.32	13.32
UNE OTHER, PROVISIONING ONLY - NO RATE																	
		NID - Dispatch and Service Order for NID installation			UENTW	UNDBX	0.00	0.00									
		UNTW Circuit Id Establishment, Provisioning Only - No Rate			UENTW	UENCE	0.00	0.00									
		Unbundled Contract Name, Provisioning Only - No Rate			UEANL,UEF,UEQ,UENTW	UNECN	0.00	0.00									
		Unbundled Sub-Loop Feeder-2 Wire Cross Box Jumper - no rate			UEA,UDN,UCL,UDC	USBFQ	0.00	0.00									
		Unbundled Sub-Loop Feeder-4 Wire Cross Box Jumper - no rate			UEA,USL,UCL,UDL	USBFR	0.00	0.00									
		High Capacity Unbundled Local Loop - DS3 - Facility Termination per month			UE3	UE3PX	374.24	595.37	304.50	234.83	170.16			36.84	36.84		
		High Capacity Unbundled Local Loop - STS-1 - Per Mile per month			UDLSX	1L5ND	9.19										
		High Capacity Unbundled Local Loop - STS-1 - Facility Termination per month			UDLSX	UDLS1	389.35	595.37	304.50	215.82	151.15			36.84	36.84		
	Note (1): Rates provided in TN for both electronic and manual Loop Makeup are interim and subject to retro-active true-up adjustments pending a permanent rate ruling on these rate elements from the Tennessee Regulatory Authority.																
LOOP MAKE-UP																	
		Loop Makeup - Preordering Without Reservation, per working or spare facility queried (Manual).	R		UMK	UMKLW		0.76	0.76					19.99	19.99	19.99	19.99
		Loop Makeup - Preordering With Reservation, per spare facility queried (Manual).	R		UMK	UMKLP		0.76	0.76					19.99	19.99	19.99	19.99
		Loop Makeup--With or Without Reservation, per working or spare facility queried (Mechanized)	R		UMK	UMKMQ		0.76	0.76								
LINE SHARING AND LINE SPLITTING																	

UNBUNDLED NETWORK ELEMENTS - Tennessee														Attachment: 2		Exhibit: A	
CATEGORY		RATE ELEMENTS	Interim	Zone	BCS	USOC	RATES ($)					Svc Order Submitted Elec per LSR	Svc Order Submitted Manually per LSR	Incremental Charge - Manual Svc Order vs. Electronic-1st	Incremental Charge - Manual Svc Order vs. Electronic-Add'l	Incremental Charge - Manual Svc Order vs. Electronic-Disc 1st	Incremental Charge - Manual Svc Order vs. Electronic-Disc Add'l
							Rec	Nonrecurring		Nonrecurring Disconnect		OSS Rates ($)					
								First	Add'l	First	Add'l	SOMEC	SOMAN	SOMAN	SOMAN	SOMAN	SOMAN
	NOTE 1: The Line Sharing monthly recurring rates for all installations completed from October 02, 2003 through midnight October 01, 2004 shall be billed as follows:																
	NOTE 1: 10/02/2003 – 10/01/2004: 25% of the rate for an unbundled copper loop non-designed ("UCLND")																
	NOTE 1: 10/02/2004 – 10/01/2005: 50% of the rate for UCLND																
	NOTE 1: 10/02/2005 – 10/01/2006: 75% of the rate for UCLND																
	NOTE 1: Above will apply to USOCS: ULSDT and ULSCT																
	****NOTE 2: The Line Sharing monthly recurring rates with USOCs ULSDC and ULSCC applies only to circuits installed and inservice on or before October 1, 2003**																
	LINE SHARING																
	SPLITTERS-CENTRAL OFFICE BASED																
		Line Sharing Splitter, per System 96 Line Capacity			ULS	ULSDA	100.00	150.00	0.00	0.00	0.00			20.35	10.54	13.32	13.32
		Line Sharing Splitter, per System 24 Line Capacity			ULS	ULSDB	25.00	150.00	0.00	0.00	0.00			20.35	10.54	13.32	13.32
		Line Sharing-DLEC Owned Splitter in CO-CFA activaton-deactivation (per LSOD)			ULS	ULSDG		163.06	0.00	92.71	0.00			20.35	10.54	13.32	13.32
	END USER ORDERING-CENTRAL OFFICE BASED LINE SHARING																
		Line Sharing - per Line Activation (BST Owned splitter) - OBSOLETE see **NOTE 2			ULS	ULSDC	0.61	40.00	31.39	0.00	0.00			20.35	10.54	13.32	13.32
		Line Share Service, TRO per line activation, BST owned splitter - Central Office Located (50% of UCLND) - please see NOTE 1 (E:10/2/2004)			ULS	ULSDT	5.87	40.00	31.39	0.00	0.00						
		Line Share Service, TRO per line activation, BST owned splitter - Central Office Located (75% of UCLND) - please see NOTE 1 (E:10/2/2005)			ULS	ULSDT	8.81	40.00	31.39	0.00	0.00						
		Line Sharing - per Subsequent Activity per Line Rearrangement(BST Owned Splitter)			ULS	ULSDS		30.00	15.00					20.35	10.54	13.32	13.32
		Line Sharing - per Subsequent Activity per Line Rearrangement(DLEC Owned Splitter)			ULS	ULSCS		30.00	15.00					20.35	10.54	13.32	13.32
		Line Sharing - per Line Activation (DLEC owned Splitter) - OBSOLETE see **NOTE 2			ULS	ULSCC	0.61	47.44	19.31	0.00	0.00			20.35	10.54	13.32	13.32
		Line Share Service, TRO per line activation, CLEC owned splitter - Central Office Located (50% of UCLND) - please see NOTE 1 (E:10/2/2004)			ULS	ULSCT	5.87	47.44	19.31	0.00	0.00						
		Line Share Service, TRO per line activation, CLEC owned splitter - Central Office Located (75% of UCLND) - please see NOTE 1 (E:10/2/2005)			ULS	ULSCT	8.81	47.44	19.31	0.00	0.00						
	LINE SPLITTING																
	MAINTENANCE																
		No Trouble Found - per 1/2 hour increments - Basic						80.00	55.00								
		No Trouble Found - per 1/2 hour increments - Overtime						120.00	82.50								
		No Trouble Found - per 1/2 hour increments - Premium						160.00	110.00								
UNBUNDLED DEDICATED TRANSPORT																	
	INTEROFFICE CHANNEL - DEDICATED TRANSPORT																
		Interoffice Channel - Dedicated Transport - 2-Wire Voice Grade - Per Mile per month			U1TVX	1L5XX	0.0054										
		Interoffice Channel - Dedicated Transport- 2- Wire Voice Grade - Facility Termination			U1TVX	U1TV2	18.58	55.39	17.37	27.96	3.51			20.35	21.09		
		Interoffice Channel - Dedicated Transpor t- 2-Wire Voice Grade Rev Bat. - Per Mile per month			U1TVX	1L5XX	0.0054										
		Interoffice Channel - Dedicated Transport- 2- Wire VG Rev Bat. - Facility Termination			U1TVX	U1TR2	18.58	55.39	17.37	27.96	3.51			20.35	21.09		
		Interoffice Channel - Dedicated Transport - 4-Wire Voice Grade - Per Mile per month			U1TVX	1L5XX	0.0054										
		Interoffice Channel - Dedicated Transport - 4- Wire Voice Grade - Facility Termination			U1TVX	U1TV4	24.09	37.87	26.02	30.78	13.07			15.08	15.08		
		Interoffice Channel - Dedicated Transport - 56 kbps - per mile per month			U1TDX	1L5XX	0.0174										
		Interoffice Channel - Dedicated Transport - 56 kbps - Facility Termination			U1TDX	U1TD5	17.98	55.39	17.37	27.96	3.51			20.35	21.09		
		Interoffice Channel - Dedicated Transport - 64 kbps - per mile per month			U1TDX	1L5XX	0.0174										

UNBUNDLED NETWORK ELEMENTS - Tennessee														Attachment: 2		Exhibit: A	
CATEGORY		RATE ELEMENTS	Interim	Zone	BCS	USOC	RATES ($)					Svc Order Submitted Elec per LSR	Svc Order Submitted Manually per LSR	Incremental Charge - Manual Svc Order vs. Electronic-1st	Incremental Charge - Manual Svc Order vs. Electronic-Add'l	Incremental Charge - Manual Svc Order vs. Electronic-Disc 1st	Incremental Charge - Manual Svc Order vs. Electronic-Disc Add'l
							Rec	Nonrecurring		Nonrecurring Disconnect		OSS Rates ($)					
								First	Add'l	First	Add'l	SOMEC	SOMAN	SOMAN	SOMAN	SOMAN	SOMAN
		Interoffice Channel - Dedicated Transport - 64 kbps - Facility Termination			U1TDX	U1TD6	17.98	55.39	17.37	27.96	3.51			20.35	21.09		
		Interoffice Channel - Dedicated Channel - DS1 - Per Mile per month			U1TD1	1L5XX	0.3562										
		Interoffice Channel - Dedicated Tranport - DS1 - Facility Termination			U1TD1	U1TF1	77.86	112.40	76.27	19.55	14.99			20.35	21.09		
		Interoffice Channel - Dedicated Transport - DS3 - Per Mile per month			U1TD3	1L5XX	2.34										
		Interoffice Channel - Dedicated Transport - DS3 - Facility Termination per month			U1TD3	U1TF3	848.99	395.29	176.56	109.04	105.91			36.84	36.84		
		Interoffice Channel - Dedicated Transport - STS-1 - Per Mile per month			U1TS1	1L5XX	2.34										
		Interoffice Channel - Dedicated Transport - STS-1 - Facility Termination			U1TS1	U1TFS	849.30	395.29	176.56	109.04	105.91			36.84	36.84		
DARK FIBER																	
		Dark Fiber, Four Fiber Strands, Per Route Mile or Fraction Thereof per month - Interoffice Channel			UDF, UDFCX	1L5DF	28.74										
		NRC Dark Fiber - Interoffice Channel			UDF, UDFCX	UDF14		1,121.00	153.19	580.26	357.17			20.35	10.54	13.32	13.32
		Dark Fiber, Four Fiber Strands, Per Route Mile or Fraction Thereof per month - Local Loop			UDF, UDFCX	1L5DL	58.83										
		NRC Dark Fiber - Local Loop			UDF, UDFCX	UDFL4		1,121.00	153.19	580.26	357.17			20.35	10.54	13.32	13.32
SIGNALING (CCS7)																	
		CCS7 Signaling Termination, Per STP Port			UDB	PT8SX	138.41										
		CCS7 Signaling Usage, Per TCAP Message					0.0000916										
		CCS7 Signaling Connection, Per link (A link)			UDB	TPP6A	17.84	130.84	130.84					20.35	20.35	13.32	13.32
		CCS7 Signaling Connection, Per link (B link) (also known as D link)			UDB	TPP6B	17.84	130.84	130.84					20.35	20.35	13.32	13.32
		CCS7 Signaling Connection, Switched access service, interface groups, transmissiom paths 6 DS1 level path with bit stream signaling			UDB	TPP6X	17.84	130.84	130.84					20.35	20.35	13.32	13.32
		CCS7 Signaling Connection-A link, per month			UDB	TPP9A	17.84	130.84	130.84					20.35	20.35	13.32	13.32
		month			UDB	TPP9B	17.84	130.84	130.84					20.35	20.35	13.32	13.32
		CCS7 Signaling Connection, Switched access service, interface groups, transmissiom paths 9 DS3 level path with bit stream signaling			UDB	TPP9X	17.84	130.84	130.84					20.35	20.35	13.32	13.32
		CCS7 Signaling Usage, Per ISUP Message					0.0000373										
		CCS7 Signaling Usage Surrogate, per link per LATA			UDB	STU56	352.30										
		Signaling Point Code, per Originating Point Code Establishment or Change, per STP			UDB	CCAPO		121.77	121.77					20.35	20.35	13.32	13.32
SELECTIVE ROUTING																	
		Selective Routing Per Unique Line Class Code Per Request Per Switch						179.60	179.60					20.35	20.35		
ENHANCED EXTENDED LINK (EELs)																	
	NOTE: The monthly recurring and non-recurring charges below will apply and the Switch-As-Is Charge will not apply for UNE combinations provisioned as ' Ordinarily Combined' Network Elements.																
	NOTE: The monthly recurring and the Switch-As-Is Charge and not the non-recurring charges below will apply for UNE combinations provisioned as ' Currently Combined' Network Elements.																
	EXTENTED 2-WIRE VOICE GRADE EXTENDED LOOP WITH DEDICATED DS1 INTEROFFICE TRANSPORT																
		First 2-Wire VG Loop (SL2) in Combination - Zone 1		1	UNCVX	UEAL2	16.56	108.76	35.47	72.94	10.86			20.35	21.09		
		First 2-Wire VG Loop (SL2) in Combination - Zone 2		2	UNCVX	UEAL2	21.63	108.76	35.47	72.94	10.86			20.35	21.09		
		First 2-Wire VG Loop (SL2) in Combination - Zone 3		3	UNCVX	UEAL2	28.28	108.76	35.47	72.94	10.86			20.35	21.09		
		Interoffice Transport - Dedicated - DS1 combination - Per Mile per month			UNC1X	1L5XX	0.3562										
		Interoffice Transport - Dedicated - DS1 combination - Facility Termination per month			UNC1X	U1TF1	77.86	171.24	113.12	70.07	30.90			20.35	21.09		
		1/0 Channelization System in combination Per Month			UNC1X	MQ1	80.77	105.76	14.48	3.04	2.74						
		Voice Grade COCI - Per Month			UNCVX	1D1VG	0.91	5.70	4.42								
		Each Additional 2-Wire VG Loop (SL 2) in Combination - Zone 1		1	UNCVX	UEAL2	16.56	108.76	35.47	72.94	10.86			20.35	21.09		
		Each Additional 2-Wire VG Loop (SL 2) in Combination - Zone 2		2	UNCVX	UEAL2	21.63	108.76	35.47	72.94	10.86			20.35	21.09		

UNBUNDLED NETWORK ELEMENTS - Tennessee														Attachment: 2		Exhibit: A	
CATEGORY		RATE ELEMENTS	Interim	Zone	BCS	USOC	RATES ($)					Svc Order Submitted Elec per LSR	Svc Order Submitted Manually per LSR	Incremental Charge - Manual Svc Order vs. Electronic-1st	Incremental Charge - Manual Svc Order vs. Electronic-Add'l	Incremental Charge - Manual Svc Order vs. Electronic-Disc 1st	Incremental Charge - Manual Svc Order vs. Electronic-Disc Add'l
							Rec	Nonrecurring		Nonrecurring Disconnect		OSS Rates ($)					
								First	Add'l	First	Add'l	SOMEC	SOMAN	SOMAN	SOMAN	SOMAN	SOMAN
		Each Additional 2-Wire VG Loop (SL 2) in Combination - Zone 3		3	UNCVX	UEAL2	28.28	108.76	35.47	72.94	10.86			20.35	21.09		
		Voice Grade COCI - Per Month			UNCVX	1D1VG	0.91	5.70	4.42								
		Nonrecurring Currently Combined Network Elements Switch -As-Is Charge			UNC1X	UNCCC		52.73	24.62	9.12	9.12			20.35	21.09		
	EXTENDED 4-WIRE VOICE GRADE EXTENDED LOOP WITH DEDICATED DS1 INTEROFFICE TRANSPORT																
		First 4-Wire Analog Voice Grade Loop in Combination - Zone 1		1	UNCVX	UEAL4	24.70	108.76	35.47	72.94	10.86			20.35	21.09		
		First 4-Wire Analog Voice Grade Loop in Combination - Zone 2		2	UNCVX	UEAL4	32.26	108.76	35.47	72.94	10.86			20.35	21.09		
		First 4-Wire Analog Voice Grade Loop in Combination - Zone 3		3	UNCVX	UEAL4	42.18	108.76	35.47	72.94	10.86			20.35	21.09		
		Interoffice Transport - Dedicated - DS1 combination - Per Mile Per Month			UNC1X	1L5XX	0.3562										
		Interoffice Transport - Dedicated - DS1 - Facility Termination Per Month			UNC1X	U1TF1	77.86	171.24	113.12	70.07	30.90			20.35	21.09		
		1/0 Channel System in combination Per Month			UNC1X	MQ1	80.77	105.76	14.48	3.04	2.74						
		Voice Grade COCI in combination - per month			UNCVX	1D1VG	0.91	5.70	4.42								
		Additional 4-Wire Analog Voice Grade Loop in same DS1 Interoffice Transport Combination - Zone 1		1	UNCVX	UEAL4	24.70	108.76	35.47	72.94	10.86			20.35	21.09		
		Additional 4-Wire Analog Voice Grade Loop in same DS1 Interoffice Transport Combination - Zone 2		2	UNCVX	UEAL4	32.26	108.76	35.47	72.94	10.86			20.35	21.09		
		Additional 4-Wire Analog Voice Grade Loop in same DS1 Interoffice Transport Combination - Zone 3		3	UNCVX	UEAL4	42.18	108.76	35.47	72.94	10.86			20.35	21.09		
		Additional Voice Grade COCI in combination - per month			UNCVX	1D1VG	0.91	5.70	4.42								
		Nonrecurring Currently Combined Network Elements Switch -As-Is Charge			UNC1X	UNCCC		52.73	24.62	9.12	9.12			20.35	21.09		
	EXTENDED 4-WIRE 56 KBPS EXTENDED DIGITAL LOOP WITH DEDICATED DS1 INTEROFFICE TRANSPORT																
		First 4-Wire 56Kbps Digital Grade Loop in Combination - Zone 1		1	UNCDX	UDL56	31.10	108.76	35.47	72.94	10.86			20.35	21.09		
		First 4-Wire 56Kbps Digital Grade Loop in Combination - Zone 2		2	UNCDX	UDL56	40.61	108.76	35.47	72.94	10.86			20.35	21.09		
		First 4-Wire 56Kbps Digital Grade Loop in Combination - Zone 3		3	UNCDX	UDL56	53.11	108.76	35.47	72.94	10.86			20.35	21.09		
		Interoffice Transport - Dedicated - DS1 combination - Per Mile Per Month			UNC1X	1L5XX	0.3562										
		Interoffice Transport - Dedicated - DS1 - combination Facility Termination Per Month			UNC1X	U1TF1	77.86	171.24	113.12	70.07	30.90			20.35	21.09		
		1/0 Channel System in combination Per Month			UNC1X	MQ1	80.77	105.76	14.48	3.04	2.74						
		OCU-DP COCI (data) per month (2.4-64kbs)			UNCDX	1D1DD	0.91	5.70	4.42								
		Additional 4-Wire 56Kbps Digital Grade Loop in same DS1 Interoffice Transport Combination - Zone 1		1	UNCDX	UDL56	31.10	108.76	35.47	72.94	10.86			20.35	21.09		
		Additional 4-Wire 56Kbps Digital Grade Loop in same DS1 Interoffice Transport Combination - Zone 2		2	UNCDX	UDL56	40.61	108.76	35.47	72.94	10.86			20.35	21.09		
		Additional 4-Wire 56Kbps Digital Grade Loop in same DS1 Interoffice Transport Combination - Zone 3		3	UNCDX	UDL56	53.11	108.76	35.47	72.94	10.86			20.35	21.09		
		Additional OCU-DP COCI (data) - in combination per month (2.4-64kbs)			UNCDX	1D1DD	0.91	5.70	4.42								
		Nonrecurring Currently Combined Network Elements Switch -As-Is Charge			UNC1X	UNCCC		52.73	24.62	9.12	9.12			20.35	21.09		
	EXTENDED 4-WIRE 64 KBPS EXTENDED DIGITAL LOOP WITH DEDICATED DS1 INTEROFFICE TRANSPORT																
		First 4-Wire 64Kbps Digital Grade Loop in Combination - Zone 1		1	UNCDX	UDL64	31.10	108.76	35.47	72.94	10.86			20.35	21.09		
		First 4-Wire 64Kbps Digital Grade Loop in Combination - Zone 2		2	UNCDX	UDL64	40.61	108.76	35.47	72.94	10.86			20.35	21.09		
		First 4-Wire 64Kbps Digital Grade Loop in Combination - Zone 3		3	UNCDX	UDL64	53.11	108.76	35.47	72.94	10.86			20.35	21.09		
		Interoffice Transport - Dedicated - DS1 combination - Per Mile Per Month			UNC1X	1L5XX	0.3562										

UNBUNDLED NETWORK ELEMENTS - Tennessee														Attachment: 2		Exhibit: A	
CATEGORY		RATE ELEMENTS	Interim	Zone	BCS	USOC	RATES ($)					Svc Order Submitted Elec per LSR	Svc Order Submitted Manually per LSR	Incremental Charge - Manual Svc Order vs. Electronic-1st	Incremental Charge - Manual Svc Order vs. Electronic-Add'l	Incremental Charge - Manual Svc Order vs. Electronic-Disc 1st	Incremental Charge - Manual Svc Order vs. Electronic-Disc Add'l
							Rec	Nonrecurring		Nonrecurring Disconnect		OSS Rates ($)					
								First	Add'l	First	Add'l	SOMEC	SOMAN	SOMAN	SOMAN	SOMAN	SOMAN
		interoffice Transport - Dedicated - DS1 combination - Facility Termination Per Month			UNC1X	U1TF1	77.86	171.24	113.12	70.07	30.90			20.35	21.09		
		1/0 Channel System in combination Per Month			UNC1X	MQ1	80.77	105.76	14.48	3.04	2.74						
		OCU-DP COCI (data) - in combination - per month (2.4-64kbs)			UNCDX	1D1DD	0.91	5.70	4.42								
		Additional 4-Wire 64Kbps Digital Grade Loop in same DS1 Interoffice Transport Combination - Zone 1		1	UNCDX	UDL64	31.10	108.76	35.47	72.94	10.86			20.35	21.09		
		Additional 4-Wire 64Kbps Digital Grade Loop in same DS1 Interoffice Transport Combination - Zone 2		2	UNCDX	UDL64	40.61	108.76	35.47	72.94	10.86			20.35	21.09		
		Additional 4-Wire 64Kbps Digital Grade Loop in same DS1 Interoffice Transport Combination - Zone 3		3	UNCDX	UDL64	53.11	108.76	35.47	72.94	10.86			20.35	21.09		
		Additional OCU-DP COCI (data) - in combination - per month (2.4-64kbs)			UNCDX	1D1DD	0.91	5.70	4.42								
		Nonrecurring Currently Combined Network Elements Switch -As-Is Charge			UNC1X	UNCCC		52.73	24.62	9.12	9.12			20.35	21.09		
	EXTENDED 4-WIRE DS1 DIGITAL EXTENDED LOOP WITH DEDICATED DS1 INTEROFFICE TRANSPORT																
		4-Wire DS1 Digital Loop in Combination - Zone 1		1	UNC1X	USLXX	57.73	228.40	161.74	79.87	24.88						
		4-Wire DS1 Digital Loop in Combination - Zone 2		2	UNC1X	USLXX	75.40	228.40	161.74	79.87	24.88						
		4-Wire DS1 Digital Loop in Combination - Zone 3		3	UNC1X	USLXX	98.59	228.40	161.74	79.87	24.88						
		Interoffice Transport - Dedicated - DS1 combination - Per Mile Per Month			UNC1X	1L5XX	0.3562										
		Interoffice Transport - Dedicated - DS1 combination - Facility Termination Per Month			UNC1X	U1TF1	77.86	171.24	113.12	70.07	30.90			20.35	21.09		
		Nonrecurring Currently Combined Network Elements Switch -As-Is Charge			UNC1X	UNCCC		52.73	24.62	9.12	9.12			20.35	21.09		
	EXTENDED 4-WIRE DS1 DIGITAL EXTENDED LOOP WITH DEDICATED DS3 INTEROFFICE TRANSPORT																
		First DS1Loop in Combination - Zone 1		1	UNC1X	USLXX	57.73	228.40	161.74	79.87	24.88			20.35	21.09		
		First DS1Loop in Combination - Zone 2		2	UNC1X	USLXX	75.40	228.40	161.74	79.87	24.88			20.35	21.09		
		First DS1Loop in Combination - Zone 3		3	UNC1X	USLXX	98.59	228.40	161.74	79.87	24.88			20.35	21.09		
		Interoffice Transport - Dedicated - DS3 combination - Per Mile Per Month			UNC3X	1L5XX	2.34										
		Interoffice Transport - Dedicated - DS3 - Facility Termination per month			UNC3X	U1TF3	854.97	482.01	153.81	64.43	35.43			36.84	36.84		
		3/1Channel System in combination per month			UNC3X	MQ3	222.98	156.02	49.41	17.12	6.77						
		DS1 COCI in combination per month			UNC1X	UC1D1	17.58	5.70	4.42								
		Additional DS1Loop in DS3 Interoffice Transport Combination - Zone 1		1	UNC1X	USLXX	57.73	228.40	161.74	79.87	24.88			20.35	21.09		
		Additional DS1Loop in DS3 Interoffice Transport Combination - Zone 2		2	UNC1X	USLXX	75.40	228.40	161.74	79.87	24.88			20.35	21.09		
		Additional DS1Loop in DS3 Interoffice Transport Combination - Zone 3		3	UNC1X	USLXX	98.59	228.40	161.74	79.87	24.88			20.35	21.09		
		Additoinal DS1 COCI in combination per month			UNC1X	UC1D1	17.58	5.70	4.42								
		Nonrecurring Currently Combined Network Elements Switch -As-Is Charge			UNC3X	UNCCC		52.73	24.62	9.12	9.12			20.35	21.09		
	EXTENDED 2-WIRE VOICE GRADE EXTENDED LOOP/ 2 WIRE VOICE GRADE INTEROFFICE TRANSPORT																
		2-WireVG Loop in combination - Zone 1		1	UNCVX	UEAL2	16.56	108.76	35.47	72.94	10.86						
		2-WireVG Loop in combination - Zone 2		2	UNCVX	UEAL2	21.63	108.76	35.47	72.94	10.86						
		2-WireVG Loop in combination - Zone 3		3	UNCVX	UEAL2	28.28	108.76	35.47	72.94	10.86						
		Interoffice Transport - 2-wire VG - Dedicated- Per Mile Per Month			UNCVX	1L5XX	0.0174										
		Interoffice Transport - 2-wire VG - Dedicated - Facility Termination per month			UNCVX	U1TV2	21.79	79.83	44.08	69.32	31.00			20.35	21.09		
		Nonrecurring Currently Combined Network Elements Switch -As-Is Charge			UNCVX	UNCCC		52.73	24.62	9.12	9.12			20.35	21.09		
	EXTENDED 4-WIRE VOICE GRADE EXTENDED LOOP/ 4 WIRE VOICE GRADE INTEROFFICE TRANSPORT																
		4-WireVG Loop in combination - Zone 1		1	UNCVX	UEAL4	24.70	108.76	35.47	72.94	10.86						
		4-WireVG Loop in combination - Zone 2		2	UNCVX	UEAL4	32.26	108.76	35.47	72.94	10.86						
		4-WireVG Loop in combination - Zone 3		3	UNCVX	UEAL4	42.18	108.76	35.47	72.94	10.86						
		Interoffice Transport - 4-wire VG - Dedicated - Per Mile Per Month			UNCVX	1L5XX	0.0174										

UNBUNDLED NETWORK ELEMENTS - Tennessee														Attachment: 2		Exhibit: A	
CATEGORY		RATE ELEMENTS	Interim	Zone	BCS	USOC	RATES ($)					Svc Order Submitted Elec per LSR	Svc Order Submitted Manually per LSR	Incremental Charge - Manual Svc Order vs. Electronic-1st	Incremental Charge - Manual Svc Order vs. Electronic-Add'l	Incremental Charge - Manual Svc Order vs. Electronic-Disc 1st	Incremental Charge - Manual Svc Order vs. Electronic-Disc Add'l
							Rec	Nonrecurring		Nonrecurring Disconnect		OSS Rates ($)					
								First	Add'l	First	Add'l	SOMEC	SOMAN	SOMAN	SOMAN	SOMAN	SOMAN
		Interoffice Transport - 4-wire VG - Dedicated - Facility Termination per month			UNCVX	U1TV4	27.30	79.83	44.08	69.32	31.00			20.35	21.09		
		Nonrecurring Currently Combined Network Elements Switch -As-Is Charge			UNCVX	UNCCC		52.73	24.62	9.12	9.12			20.35	21.09		
	EXTENDED DS3 DIGITAL EXTENDED LOOP WITH DEDICATED DS3 INTEROFFICE TRANSPORT																
		DS3 Local Loop in combination - per mile per month			UNC3X	1L5ND	9.19										
		DS3 Local Loop in combination - Facility Termination per month			UNC3X	UE3PX	373.47	240.23	180.87	106.78	45.24						
		Interoffice Transport - Dedicated - DS3 - Per Mile per month			UNC3X	1L5XX	2.34										
		Interoffice Transport - Dedicated - DS3 combination - Facility Termination per month			UNC3X	U1TF3	854.97	482.01	153.81	64.43	35.43			36.84	36.84		
		Nonrecurring Currently Combined Network Elements Switch -As-Is Charge			UNC3X	UNCCC		52.73	24.62	9.12	9.12			36.84	36.84		
	EXTENDED STS-1 DIGITAL EXTENDED LOOP WITH DEDICATED STS-1 INTEROFFICE TRANSPORT																
		STS-1 Local Lolp in combination - per mile per month			UNCSX	1L5ND	9.19										
		STS-1 Local Loop in combination - Facility Termination per month			UNCSX	UDLS1	394.56	240.23	180.87	106.78	45.24						
		Interoffice Transport - Dedicated - STS-1 combination - per mile per month			UNCSX	1L5XX	2.34										
		Interoffice Transport - Dedicated - STS-1 combination - Facility Termination per month			UNCSX	U1TFS	849.30	482.01	153.81	64.43	35.43			36.84	36.84		
		Nonrecurring Currently Combined Network Elements Switch -As-Is Charge			UNCSX	UNCCC		52.73	24.62	9.12	9.12			36.84	36.84		
	EXTENDED 2-WIRE ISDN EXTENDED LOOP WITH DS1 INTEROFFICE TRANSPORT																
		First 2-Wire ISDN Loop in Combination - Zone 1		1	UNCNX	U1L2X	22.22	108.76	35.47	72.94	10.86			20.35	21.09		
		First 2-Wire ISDN Loop in Combination - Zone 2		2	UNCNX	U1L2X	29.02	108.76	35.47	72.94	10.86			20.35	21.09		
		First 2-Wire ISDN Loop in Combination - Zone 3		3	UNCNX	U1L2X	37.95	108.76	35.47	72.94	10.86			20.35	21.09		
		Interoffice Transport - Dedicated - DS1 combination - per mile per month			UNC1X	1L5XX	0.3562										
		Interoffice Transport - Dedicated - DS1 combination - Facility Termination per month			UNC1X	U1TF1	77.86	171.24	113.12	70.07	30.90			20.35	21.09		
		1/0 Channel System in combination - per month			UNC1X	MQ1	80.77	105.76	14.48	3.04	2.74						
		2-wire ISDN COCI (BRITE) - in combination - per month			UNCNX	UC1CA	3.24	5.70	4.42								
		Additional 2-wire ISDN Loop in same DS1Interoffice Transport Combination - Zone 1		1	UNCNX	U1L2X	22.22	108.76	35.47	72.94	10.86			20.35	21.09		
		Additional 2-wire ISDN Loop in same DS1Interoffice Transport Combination - Zone 2		2	UNCNX	U1L2X	29.02	108.76	35.47	72.94	10.86			20.35	21.09		
		Additional 2-wire ISDN Loop in same DS1Interoffice Transport Combination - Zone 3		3	UNCNX	U1L2X	37.95	108.76	35.47	72.94	10.86			20.35	21.09		
		Additional 2-wire ISDN COCI (BRITE) - in combination- per month			UNCNX	UC1CA	3.24	5.70	4.42								
		Nonrecurring Currently Combined Network Elements Switch -As-Is Charge			UNC1X	UNCCC		52.73	24.62	9.12	9.12			20.35	21.09		
	EXTENDED 4-WIRE DS1 DIGITAL EXTENDED LOOP WITH DEDICATED STS-1 INTEROFFICE TRANSPORT																
		First DS1 Loop Combination - Zone 1		1	UNC1X	USLXX	57.73	228.40	161.74	79.87	24.88			20.35	21.09		
		First DS1 Loop Combination - Zone 2		2	UNC1X	USLXX	75.40	228.40	161.74	79.87	24.88			20.35	21.09		
		First DS1 Loop Combination - Zone 3		3	UNC1X	USLXX	98.59	228.40	161.74	79.87	24.88			20.35	21.09		
		Interoffice Transport - Dedicated - STS-1 combination - Per Mile Per Month			UNCSX	1L5XX	2.34										
		Interoffice Transport - Dedicated - STS-1 combination - Facility Termination per month			UNCSX	U1TFS	849.30	482.01	153.81	64.43	35.43			36.84	36.84		
		3/1 Channel System in combination per month			UNCSX	MQ3	222.98	156.02	49.41	17.12	6.77						
		DS1 COCI in combination per month			UNC1X	UC1D1	17.58	5.70	4.42								
		Additional DS1Loop in the same STS-1 Interoffice Transport Combination - Zone 1		1	UNC1X	USLXX	57.73	228.40	161.74	79.87	24.88			20.35	21.09		
		Additional DS1Loop in the same STS-1 Interoffice Transport Combination - Zone 2		2	UNC1X	USLXX	75.40	228.40	161.74	79.87	24.88			20.35	21.09		
		Additional DS1Loop in the same STS-1 Interoffice Transport Combination - Zone 3		3	UNC1X	USLXX	98.59	228.40	161.74	79.87	24.88			20.35	21.09		

UNBUNDLED NETWORK ELEMENTS - Tennessee														Attachment: 2		Exhibit: A	
CATEGORY		RATE ELEMENTS	Interim	Zone	BCS	USOC	RATES ($)					Svc Order Submitted Elec per LSR	Svc Order Submitted Manually per LSR	Incremental Charge - Manual Svc Order vs. Electronic-1st	Incremental Charge - Manual Svc Order vs. Electronic-Add'l	Incremental Charge - Manual Svc Order vs. Electronic-Disc 1st	Incremental Charge - Manual Svc Order vs. Electronic-Disc Add'l
							Rec	Nonrecurring		Nonrecurring Disconnect		OSS Rates ($)					
								First	Add'l	First	Add'l	SOMEC	SOMAN	SOMAN	SOMAN	SOMAN	SOMAN
		DS1 COCI in combination per month			UNC1X	UC1D1	17.58	5.70	4.42								
		Nonrecurring Currently Combined Network Elements Switch -As-Is Charge			UNCSX	UNCCC		52.73	24.62	9.12	9.12			36.84	36.84		
	EXTENDED 4-WIRE 56 KBPS DIGITAL EXTENDED LOOP WITH 56 KBPS INTEROFFICE TRANSPORT																
		4-wire 56 kbps Local Loop in combination - Zone 1		1	UNCDX	UDL56	31.10	108.76	35.47	72.94	10.86						
		4-wire 56 kbps Local Loop in combination - Zone 2		2	UNCDX	UDL56	40.61	108.76	35.47	72.94	10.86						
		4-wire 56 kbps Local Loop in combination - Zone 3		3	UNCDX	UDL56	53.11	108.76	35.47	72.94	10.86						
		Interoffice Transport - Dedicated - 4-wire 56 kbps combination - Per Mile per month			UNCDX	1L5XX	0.0174										
		Interoffice Transport - Dedicated - 4-wire 56 kbps combination - Facility Termination per month			UNCDX	U1TD5	21.19	79.83	44.08	69.32	31.00			20.35	21.09		
		Nonrecurring Currently Combined Network Elements Switch -As-Is Charge			UNCDX	UNCCC		52.73	24.62	9.12	9.12			20.35	21.09		
	EXTENDED 4-WIRE 64 KBPS DIGITAL EXTENDED LOOP WITH 64 KBPS INTEROFFICE TRANSPORT																
		4-wire 64 kbps Lcoal Loop in Combination - Zone 1		1	UNCDX	UDL64	31.10	108.76	35.47	72.94	10.86						
		4-wire 64 kbps Lcoal Loop in Combination - Zone 2		2	UNCDX	UDL64	40.61	108.76	35.47	72.94	10.86						
		4-wire 64 kbps Lcoal Loop in Combination - Zone 3		3	UNCDX	UDL64	53.11	108.76	35.47	72.94	10.86						
		Interoffice Transport - Dedicated - 4-wire 64 kbps combination - Per Mile per month			UNCDX	1L5XX	0.0174										
		Interoffice Transport - Dedicated - 4-wire 64 kbps combination - Facility Termination per month			UNCDX	U1TD6	21.19	79.83	44.08	69.32	31.00			20.35	21.09		
		Nonrecurring Currently Combined Network Elements Switch -As-Is Charge			UNCDX	UNCCC		52.73	24.62	9.12	9.12			20.35	21.09		
	EXTENDED 2-WIRE VOICE GRADE LOOP WITH DS1 INTEROFFICE TRANSPORT w/ 3/1 MUX																
		First 2-wire VG Loop (SL2) in Combination - Zone 1		1	UNCVX	UEAL2	16.56	108.76	35.47	72.94	10.86			20.35	21.09		
		First 2-wire VG Loop (SL2) in Combination - Zone 2		2	UNCVX	UEAL2	21.63	108.76	35.47	72.94	10.86			20.35	21.09		
		First 2-wire VG Loop (SL2) in Combination - Zone 3		3	UNCVX	UEAL2	28.28	108.76	35.47	72.94	10.86			20.35	21.09		
		First Interoffice Transport - Dedicated - DS1 combination - Per Mile			UNC1X	1L5XX	0.3562										
		First Interoffice Transport - Dedicated - DS1 combination - Facility Termination per month			UNC1X	U1TF1	77.86	171.24	113.12	70.07	30.90			20.35	21.09		
		Per each DS1 Channelization System Per Month			UNC1X	MQ1	80.77	105.76	14.48	3.04	2.74						
		Per each Voice Grade COCI - Per Month per month			UNCVX	1D1VG	0.91	5.70	4.42								
		3/1 Channel System in combination per month			UNC3X	MQ3	222.98	156.02	49.41	17.12	6.77			36.84	36.84		
		Per each DS1 COCI in combination per month			UNC1X	UC1D1	17.58	5.70	4.42								
		Each Additional 2-Wire VG Loop(SL 2) in the same DS1 Interoffice Transport Combination - Zone 1		1	UNCVX	UEAL2	16.56	108.76	35.47	72.94	10.86			20.35	21.09		
		Each Additional 2-Wire VG Loop(SL2) in the same DS1 Interoffice Transport Combination - Zone 2		2	UNCVX	UEAL2	21.63	108.76	35.47	72.94	10.86			20.35	21.09		
		Each Additional 2-Wire VG Loop(SL2) in the same DS1 Interoffice Transport Combination - Zone 3		3	UNCVX	UEAL2	28.28	108.76	35.47	72.94	10.86			20.35	21.09		
		Each Additional Voice Grade COCI in combination - per month			UNCVX	1D1VG	0.91	5.70	4.42								
		Each Additional DS1 Interoffice Channel per mile in same 3/1 Channel System per month			UNC1X	1L5XX	0.3562										
		Each Additional DS1 Interoffice Channel Facility Termination in same 3/1 Channel System per month			UNC1X	U1TF1	77.86	171.24	113.12	70.07	30.90			20.35	21.09		
		Each Additional DS1 COCI combination per month			UNC1X	UC1D1	17.58	5.70	4.42								
		Nonrecurring Currently Combined Network Elements Switch -As-Is Charge			UNC1X	UNCCC		52.73	24.62	9.12	9.12			20.35	21.09		
	EXTENDED 4-WIRE VOICE GRADE LOOP WITH DEDICATED DS1 INTEROFFICE TRANSPORT w/ 3/1 MUX																
		First 4-Wire Analog Voice Grade Local Loop in Combination - Zone 1		1	UNCVX	UEAL4	24.70	108.76	35.47	72.94	10.86			20.35	21.09		
		First 4-Wire Analog Voice Grade Local Loop in Combination - Zone 2		2	UNCVX	UEAL4	32.26	108.76	35.47	72.94	10.86			20.35	21.09		
		First 4-Wire Analog Voice Grade Local Loop in Combination - Zone 3		3	UNCVX	UEAL4	42.18	108.76	35.47	72.94	10.86			20.35	21.09		
		First Interoffice Transport - Dedicated - DS1 combination - Per Mile Per Month			UNC1X	1L5XX	0.3562										

UNBUNDLED NETWORK ELEMENTS - Tennessee														Attachment: 2		Exhibit: A	
CATEGORY		RATE ELEMENTS	Interim	Zone	BCS	USOC	RATES ($)					Svc Order Submitted Elec per LSR	Svc Order Submitted Manually per LSR	Incremental Charge - Manual Svc Order vs. Electronic-1st	Incremental Charge - Manual Svc Order vs. Electronic-Add'l	Incremental Charge - Manual Svc Order vs. Electronic-Disc 1st	Incremental Charge - Manual Svc Order vs. Electronic-Disc Add'l
							Rec	Nonrecurring		Nonrecurring Disconnect		OSS Rates ($)					
								First	Add'l	First	Add'l	SOMEC	SOMAN	SOMAN	SOMAN	SOMAN	SOMAN
		First Interoffice Transport - Dedicated - DS1 - Facility Termination Per Month			UNC1X	U1TF1	77.86	171.24	113.12	70.07	30.90			20.35	21.09		
		Per each 1/0 Channel System in combination Per Month			UNC1X	MQ1	80.77	105.76	14.48	3.04	2.74						
		Per each Voice Grade COCI in combination - per month			UNCVX	1D1VG	0.91	5.70	4.42								
		3/1 Channel System in combination per month			UNC3X	MQ3	222.98	156.02	49.41	17.12	6.77			36.84	36.84		
		Per each DS1 COCI in combination per month			UNC1X	UC1D1	17.58	5.70	4.42								
		Additional 4-Wire Analog Voice Grade Loop in same DS1 Interoffice Transport Combination - Zone 1		1	UNCVX	UEAL4	24.70	108.76	35.47	72.94	10.86			20.35	21.09		
		Additional 4-Wire Analog Voice Grade Loop in same DS1 Interoffice Transport Combination - Zone 2		2	UNCVX	UEAL4	32.26	108.76	35.47	72.94	10.86			20.35	21.09		
		Additional 4-Wire Analog Voice Grade Loop in same DS1 Interoffice Transport Combination - Zone 3		3	UNCVX	UEAL4	42.18	108.76	35.47	72.94	10.86			20.35	21.09		
		Each Additional DS1 Interoffice Channel per mile in same 3/1 Channel System per month			UNC1X	1L5XX	0.3562										
		Each Additional DS1 Interoffice Channel Facility Termination in same 3/1 Channel System per month			UNC1X	U1TF1	77.86	171.24	113.12	70.07	30.90			20.35	21.09		
		Additional Voice Grade COCI - in combination - per month			UNCVX	1D1VG	0.91	5.70	4.42								
		Nonrecurring Currently Combined Network Elements Switch -As-Is Charge			UNC1X	UNCCC		52.73	24.62	9.12	9.12			20.35	21.09		
	EXTENDED 4-WIRE 56 KBPS DIGITAL LOOP WITH DEDICATED DS1 INTEROFFICE TRANSPORT w/ 3/1 MUX																
		First 4-Wire 56Kbps Digital Grade Local Loop in Combination - Zone 1		1	UNCDX	UDL56	31.10	108.76	35.47	72.94	10.86			20.35	21.09		
		First 4-Wire 56Kbps Digital Grade Local Loop in Combination - Zone 2		2	UNCDX	UDL56	40.61	108.76	35.47	72.94	10.86			20.35	21.09		
		First 4-Wire 56Kbps Digital Grade Local Loop in Combination - Zone 3		3	UNCDX	UDL56	53.11	108.76	35.47	72.94	10.86			20.35	21.09		
		First Interoffice Transport - Dedicated - DS1 combination - Per Mile Per Month			UNC1X	1L5XX	0.3562										
		First Interoffice Transport - Dedicated - DS1 - combination Facility Termination Per Month			UNC1X	U1TF1	77.86	171.24	113.12	70.07	30.90			20.35	21.09		
		Per each 1/0 Channel System in combination Per Month			UNC1X	MQ1	80.77	105.76	14.48	3.04	2.74						
		Per each OCU-DP COCI (data) COCI per month (2.4-64kbs)			UNCDX	1D1DD	0.91	5.70	4.42								
		3/1 Channel System in combination per month			UNC3X	MQ3	222.98	156.02	49.41	17.12	6.77			36.84	36.84		
		Per each DS1 COCI in combination per month			UNC1X	UC1D1	17.58	5.70	4.42								
		Additional 4-Wire 56Kbps Digital Grade Loop in same DS1 Interoffice Transport Combination - Zone 1		1	UNCDX	UDL56	31.10	108.76	35.47	72.94	10.86			20.35	21.09		
		Additional 4-Wire 56Kbps Digital Grade Loop in same DS1 Interoffice Transport Combination - Zone 2		2	UNCDX	UDL56	40.61	108.76	35.47	72.94	10.86			20.35	21.09		
		Additional 4-Wire 56Kbps Digital Grade Loop in same DS1 Interoffice Transport Combination - Zone 3		3	UNCDX	UDL56	53.11	108.76	35.47	72.94	10.86			20.35	21.09		
		OCU-DP COCI (data) COCI in combination per month (2.4-64kbs)			UNCDX	1D1DD	0.91	5.70	4.42								
		Each Additional DS1 Interoffice Channel per mile in same 3/1 Channel System per month			UNC1X	1L5XX	0.3562										
		Each Additional DS1 Interoffice Channel Facility Termination in same 3/1 Channel System per month			UNC1X	U1TF1	77.86	171.24	113.12	70.07	30.90			20.35	21.09		
		Each Additional DS1 COCI in the same 3/1 channel system combination per month			UNC1X	UC1D1	17.58	5.70	4.42								
		Nonrecurring Currently Combined Network Elements Switch -As-Is Charge			UNC1X	UNCCC		52.73	24.62	9.12	9.12			20.35	21.09		
	EXTENDED 4-WIRE 64 KBPS DIGITAL LOOP WITH DEDICATED DS1 INTEROFFICE TRANSPORT w/ 3/1 MUX																
		First 4-Wire 64Kbps Digital Grade Loop in a DS1 Interoffice Transport Combination - Zone 1		1	UNCDX	UDL64	31.10	108.76	35.47	72.94	10.86			20.35	21.09		
		First 4-Wire 64Kbps Digital Grade Loop in a DS1 Interoffice Transport Combination - Zone 2		2	UNCDX	UDL64	40.61	108.76	35.47	72.94	10.86			20.35	21.09		
		First 4-Wire 64Kbps Digital Grade Loop in a DS1 Interoffice Transport Combination - Zone 3		3	UNCDX	UDL64	53.11	108.76	35.47	72.94	10.86			20.35	21.09		
		First Interoffice Transport - Dedicated - DS1 combination - Per Mile Per Month			UNC1X	1L5XX	0.3562										

UNBUNDLED NETWORK ELEMENTS - Tennessee														Attachment: 2		Exhibit: A	
CATEGORY		RATE ELEMENTS	Interim	Zone	BCS	USOC	RATES ($)					Svc Order Submitted Elec per LSR	Svc Order Submitted Manually per LSR	Incremental Charge - Manual Svc Order vs. Electronic-1st	Incremental Charge - Manual Svc Order vs. Electronic-Add'l	Incremental Charge - Manual Svc Order vs. Electronic-Disc 1st	Incremental Charge - Manual Svc Order vs. Electronic-Disc Add'l
							Rec	Nonrecurring		Nonrecurring Disconnect		OSS Rates ($)					
								First	Add'l	First	Add'l	SOMEC	SOMAN	SOMAN	SOMAN	SOMAN	SOMAN
		First Interoffice Transport - Dedicated - DS1 combination - Facility Termination Per Month			UNC1X	U1TF1	77.86	171.24	113.12	70.07	30.90			20.35	21.09		
		Per each Channel System 1/0 in combination Per Month			UNC1X	MQ1	80.77	105.76	14.48	3.04	2.74						
		Per each OCU-DP COCI (data) in combination - per month (2.4-64kbs)			UNCDX	1D1DD	0.91	5.70	4.42								
		3/1 Channel System in combination per month			UNC3X	MQ3	222.98	156.02	49.41	17.12	6.77			36.84	36.84		
		Per each DS1 COCI in combination per month			UNC1X	UC1D1	17.58	5.70	4.42								
		Additional 4-Wire 64Kbps Digital Grade Loop in same DS1 Interoffice Transport Combination - Zone 1		1	UNCDX	UDL64	31.10	108.76	35.47	72.94	10.86			20.35	21.09		
		Additional 4-Wire 64Kbps Digital Grade Loop in same DS1 Interoffice Transport Combination - Zone 2		2	UNCDX	UDL64	40.61	108.76	35.47	72.94	10.86			20.35	21.09		
		Additional 4-Wire 64Kbps Digital Grade Loop in same DS1 Interoffice Transport Combination - Zone 3		3	UNCDX	UDL64	53.11	108.76	35.47	72.94	10.86			20.35	21.09		
		Additional OCU-DP COCI (data) - DS1 to DS0 Channel System combination - per month (2.4-64kbs)			UNCDX	1D1DD	0.91	5.70	4.42								
		Each Additional DS1 Interoffice Channel per mile in same 3/1 Channel System per month			UNC1X	1L5XX	0.3562										
		Each Additional DS1 Interoffice Channel Facility Termination in same 3/1 Channel System per month			UNC1X	U1TF1	77.86	171.24	113.12	70.07	30.90			20.35	21.09		
		Each Additional DS1 COCI in the same 3/1 channel system combination per month			UNC1X	UC1D1	17.58	5.70	4.42								
		Nonrecurring Currently Combined Network Elements Switch -As-Is Charge			UNC1X	UNCCC		52.73	24.62	9.12	9.12			20.35	21.09		
	EXTENDED 2-WIRE ISDN LOOP WITH DS1 INTEROFFICE TRANSPORT w/ 3/1 MUX																
		First 2-Wire ISDN Loop in a DS1 Interoffice Combination Transport - Zone 1		1	UNCNX	U1L2X	22.22	108.76	35.47	72.94	10.86			20.35	21.09		
		First 2-Wire ISDN Loop in a DS1 Interoffice Combination Transport - Zone 2		2	UNCNX	U1L2X	29.02	108.76	35.47	72.94	10.86			20.35	21.09		
		First 2-Wire ISDN Loop in a DS1 Interoffice Combination Transport - Zone 3		3	UNCNX	U1L2X	37.95	108.76	35.47	72.94	10.86			20.35	21.09		
		First Interoffice Transport - Dedicated - DS1 combination - Per Mile per month			UNC1X	1L5XX	0.3562										
		First Interoffice Transport - Dedicated - DS1 combination - Facility Termination per month			UNC1X	U1TF1	77.86	171.24	113.12	70.07	30.90			20.35	21.09		
		Per each Channel System 1/0 in combination - per month			UNC1X	MQ1	80.77	105.76	14.48	3.04	2.74						
		Per each 2-wire ISDN COCI (BRITE) in combination - per month			UNCNX	UC1CA	3.24	5.70	4.42								
		3/1 Channel System in combination per month			UNC3X	MQ3	222.98	156.02	49.41	17.12	6.77			36.84	36.84		
		Per each DS1 COCI in combination per month			UNC1X	UC1D1	17.58	5.70	4.42								
		Additional 2-wire ISDN Loop in same DS1Interoffice Transport Combination - Zone 1		1	UNCNX	U1L2X	22.22	108.76	35.47	72.94	10.86			20.35	21.09		
		Additional 2-wire ISDN Loop in same DS1Interoffice Transport Combination - Zone 2		2	UNCNX	U1L2X	29.02	108.76	35.47	72.94	10.86			20.35	21.09		
		Additional 2-wire ISDN Loop in same DS1Interoffice Transport Combination - Zone 3		3	UNCNX	U1L2X	37.95	108.76	35.47	72.94	10.86			20.35	21.09		
		Additional 2-wire ISDN COCI (BRITE) in same 1/0 channel system combination- per month			UNCNX	UC1CA	3.24	5.70	4.42								
		Each Additional DS1 Interoffice Channel per mile in same 3/1 Channel System per month			UNC1X	1L5XX	0.3562										
		Each Additional DS1 Interoffice Channel Facility Termination in same 3/1 Channel System per month			UNC1X	U1TF1	77.86	171.24	113.12	70.07	30.90			20.35	21.09		
		Each Additional DS1 COCI in the same 3/1 channel system combination per month			UNC1X	UC1D1	17.58	5.70	4.42								
		Nonrecurring Currently Combined Network Elements Switch -As-Is Charge			UNC1X	UNCCC		52.73	24.62	9.12	9.12			20.35	21.09		
	EXTENDED 4-WIRE DS1 LOOP WITH DEDICATED DS1 INTEROFFICE TRANSPORT w/ 3/1 MUX																
		First 4-wire DS1 Digital Lcoal Loop in Combination - Zone 1		1	UNC1X	USLXX	57.73	228.40	161.74	79.87	24.88						
		First 4-wire DS1 Digital Lcoal Loop in Combination - Zone 2		2	UNC1X	USLXX	75.40	228.40	161.74	79.87	24.88						
		First 4-wire DS1 Digital Lcoal Loop in Combination - Zone 3		3	UNC1X	USLXX	98.59	228.40	161.74	79.87	24.88						

UNBUNDLED NETWORK ELEMENTS - Tennessee														Attachment: 2		Exhibit: A	
CATEGORY		RATE ELEMENTS	Interim	Zone	BCS	USOC	RATES ($)					Svc Order Submitted Elec per LSR	Svc Order Submitted Manually per LSR	Incremental Charge - Manual Svc Order vs. Electronic-1st	Incremental Charge - Manual Svc Order vs. Electronic-Add'l	Incremental Charge - Manual Svc Order vs. Electronic-Disc 1st	Incremental Charge - Manual Svc Order vs. Electronic-Disc Add'l
							Rec	Nonrecurring		Nonrecurring Disconnect		OSS Rates ($)					
								First	Add'l	First	Add'l	SOMEC	SOMAN	SOMAN	SOMAN	SOMAN	SOMAN
		First Interoffice Transport - Dedicated - DS1 combination - Per Mile Per Month			UNC1X	1L5XX	0.3562										
		First Interoffice Transport - Dedicated - DS1 combination - Facility Termination Per Month			UNC1X	U1TF1	77.86	171.24	113.12	70.07	30.90			20.35	21.09		
		3/1 Channel System in combination per month			UNC3X	MQ3	222.98	156.02	49.41	17.12	6.77			36.84	36.84		
		Per each DS1 COCI combination per month			UNC1X	UC1D1	17.58	5.70	4.42								
		Each Additional DS1 Interoffice Channel per mile in same 3/1 Channel System per month			UNC1X	1L5XX	0.3562										
		Each Additional DS1 Interoffice Channel Facility Termination in same 3/1 Channel System per month			UNC1X	U1TF1	77.86	171.24	113.12	70.07	30.90			20.35	21.09		
		Each Additional DS1 COCI in the same 3/1 channel system combination per month			UNC1X	UC1D1	17.58	5.70	4.42								
		Additional 4-Wire DS1 Digital Local Loop in Combination - Zone 1		1	UNC1X	USLXX	57.73	228.40	161.74	79.87	24.88						
		Additional 4-Wire DS1 Digital Local Loop in Combination - Zone 2		2	UNC1X	USLXX	75.40	228.40	161.74	79.87	24.88						
		Additional 4-Wire DS1 Digital Local Loop in Combination - Zone 3		3	UNC1X	USLXX	98.59	228.40	161.74	79.87	24.88						
		Nonrecurring Currently Combined Network Elements Switch -As-Is Charge			UNC1X	UNCCC		52.73	24.62	9.12	9.12			20.35	21.09		
	EXTENDED 4-WIRE 56 KBPS DIGITAL EXTENDED LOOP WITH DS0 INTEROFFICE TRANSPORT																
		First 4-wire 56 kbps Local Loop in combination - Zone 1		1	UNCDX	UDL56	31.10	108.76	35.47	72.94	10.86						
		First 4-wire 56 kbps Local Loop in combination - Zone 2		2	UNCDX	UDL56	40.61	108.76	35.47	72.94	10.86						
		First 4-wire 56 kbps Local Loop in combination - Zone 3		3	UNCDX	UDL56	53.11	108.76	35.47	72.94	10.86						
		First 4-wiree 56 kbps Interoffice Transport - Dedicated - Per Mile per month			UNCDX	1L5XX	0.0174										
		First 4-wire 56 kbps Interoffice Transport - Dedicated - Facility Termination per month			UNCDX	U1TD5	21.19	79.83	44.08	69.32	31.00			20.35	21.09		
		Nonrecurring Currently Combined Network Elements Switch -As-Is Charge			UNCDX	UNCCC		52.73	24.62	9.12	9.12			20.35	21.09		
	EXTENDED 4-WIRE 64 KBPS DIGITAL EXTENDED LOOP WITH DS0 INTEROFFICE TRANSPORT																
		First 4-wire 64 kbps Local Loop in combination - Zone 1		1	UNCDX	UDL64	31.10	108.76	35.47	72.94	10.86						
		First 4-wire 64 kbps Local Loop in combination - Zone 2		2	UNCDX	UDL64	40.61	108.76	35.47	72.94	10.86						
		First 4-wire 64 kbps Local Loop in combination - Zone 3		3	UNCDX	UDL64	53.11	108.76	35.47	72.94	10.86						
		First I4-wire 65 kbps Interoffice Transport - Dedicated - Per Mile per month			UNCDX	1L5XX	0.0174										
		First 4-wire 64 kbps Interoffice Transport - Dedicated - Facility Termination per month			UNCDX	U1TD6	21.19	79.83	44.08	69.32	31.00			20.35	21.09		
		Nonrecurring Currently Combined Network Elements Switch -As-Is Charge			UNCDX	UNCCC		52.73	24.62	9.12	9.12			20.35	10.54		
ADDITIONAL NETWORK ELEMENTS																	
	When used as a part of a currently combined facility, the non-recurrng charges do not apply, but a Switch As Is charge does apply.																
	When used as ordinarily combined network elements in All States, the non-recurring charges apply and the Switch As Is Charge does not.																
		Nonrecurring Currently Combined Network Elements Switch -As-Is Charge - 2 wire/4-Wire VG			UNCVX	UNCCC		52.73	24.62	9.12	9.12			53.73	24.62		
		Nonrecurring Currently Combined Network Elements Switch -As-Is Charge - 56/64 kbps			UNCDX	UNCCC		52.73	24.62	9.12	9.12			20.35	10.54		
	MULTIPLEXERS																
		DS1 to DS0 Channel System per month			UNC1X	MQ1	80.77	105.76	14.48	3.04	2.74			20.35	9.80		
		OCU-DP COCI (data) - DS1 to DS0 Channel System - per month (2.4-64kbs) used for a Local Loop			UDL	1D1DD	1.82	6.07	4.66						9.80		
		OCU-DP COCI (data) - DS1 to DS0 Channel System - per month (2.4-64kbs) used for connection to a channelized DS1 Local Channel in the same SWC as collocation			U1TUD	1D1DD	1.82	6.07	4.66								
		2-wire ISDN COCI (BRITE) - DS1 to DS0 Channel Systsem - per month for a Local Loop			UDN	UC1CA	3.10	6.07	4.66								
		2-wire ISDN COCI (BRITE) - DS1 to DS0 Channel Systsem - per month used for connection to a channelized DS1 Local Channel in the same SWC as collocation			U1TUB	UC1CA	3.10	6.07	4.66								

UNBUNDLED NETWORK ELEMENTS - Tennessee														Attachment: 2		Exhibit: A	
CATEGORY		RATE ELEMENTS	Interim	Zone	BCS	USOC	RATES ($)					Svc Order Submitted Elec per LSR	Svc Order Submitted Manually per LSR	Incremental Charge - Manual Svc Order vs. Electronic-1st	Incremental Charge - Manual Svc Order vs. Electronic-Add'l	Incremental Charge - Manual Svc Order vs. Electronic-Disc 1st	Incremental Charge - Manual Svc Order vs. Electronic-Disc Add'l
							Rec	Nonrecurring		Nonrecurring Disconnect		OSS Rates ($)					
								First	Add'l	First	Add'l	SOMEC	SOMAN	SOMAN	SOMAN	SOMAN	SOMAN
		Voice Grade COCI - DS1 to DS0 Channel System - per month used for a Local Loop			UEA	1D1VG	0.91	6.07	4.66								
		Voice Grade COCI - DS1 to DS0 Channel System - per month used for connection to a channelized DS1 Local Channel in the same SWC as collocation			U1TUC	1D1VG	0.91	6.07	4.66								
		DS3 to DS1 Channel System per month			UNC3X	MQ3	222.98	156.02	49.41	17.12	6.77			20.35	9.80		
		STS-1 to DS1 Channel System per month			UNCSX	MQ3	222.98	156.02	49.41	17.12	6.77			20.35	9.80		
		DS1 COCI used with Loop per month			USL	UC1D1	17.58	6.07	4.66								
		DS1 COCI (used for connection to a channelized DS1 Local Channel in the same SWC as collocation) per month			U1TUA	UC1D1	17.58	6.07	4.66								
		DS1 COCI used with Interoffice Channel per month			U1TD1	UC1D1	17.58	6.07	4.66								
		DS3 Interface Unit (DS1 COCI) used with Local Channel per month			ULDD1	UC1D1	17.58	6.07	4.66								

Amendment to the Agreement
Between
DPI-Teleconnect, LLC
and
BellSouth Telecommunications, Inc.
Dated 4/19/2003

Pursuant to this Amendment, (the "Amendment"), DPI-Teleconnect, LLC (DPI-Teleconnect), and BellSouth Telecommunications, Inc. (BellSouth), hereinafter referred to collectively as the "Parties", hereby agree to amend that certain Interconnection Agreement between the Parties dated 4/19/2003).

WHEREAS, BellSouth and DPI-Teleconnect have entered into good faith negotiations pursuant to the Act to renegotiate an interconnection agreement (New Agreement) to replace the existing Agreement between the Parties, which expired on 4/18/2006; and

WHEREAS, the Parties desire to extend the term of the Agreement; and

WHEREAS, on February 21, 2006, the Georgia Public Service Commission (Commission) issued a Letter Order in Docket No. 14361-U (Letter Order) establishing new UNE rates (New UNE Rates) to replace the rates previously ordered by the Commission on June 24, 2003 and September 22, 2003 in the first phase of Docket No. 14361-U (Old UNE Rates); and

WHEREAS, the Letter Order entitles BellSouth to recover the difference between the Old UNE Rates and the New UNE Rates for the period of time that BellSouth charged DPI-Teleconnect the Old UNE Rates; and

WHEREAS, the Parties are obligated to amend the Agreement to replace the Old UNE Rates in the Agreement with the New UNE Rates established by the Commission in its Letter Order; and

NOW, THEREFORE, in consideration of the mutual provisions contained herein and other good and valuable consideration, the receipt and sufficiency of which are hereby acknowledged, the Parties hereby covenant and agree as follows:

1. The parties hereby agree to extend the term of the Agreement by ninety (90) days following the date of the last signature of this Amendment. Other than the modification of the expiration date as described in this Amendment, all provisions in Section 2 of the General Terms and Conditions of the Agreement relating to the term and termination of the Agreement remain in full force and effect.

2. The Parties hereby agree to incorporate into the Agreement the New UNE Rates set forth in Exhibit 1 to Attachment 1, Exhibit 2 to Attachment 2, and Exhibit 4 to Attachment 4, all as attached hereto and incorporated herein by this reference, and such rates shall apply to services provided in the State of Georgia only.

3. To the extent that the New UNE Rates set forth in Exhibit 1 to Attachment 1, Exhibit 2 to Attachment 2, and Exhibit 4 to Attachment 4, all attached hereto,

conflict with any other rates in the Agreement, the rates in these attached Exhibits shall prevail for the State of Georgia.

4. For purposes of amending the Agreement to incorporate the New UNE Rates on a going-forward basis, this Amendment shall be deemed effective on March 31, 2006 (Amendment Effective Date).

5. Nothing in this Amendment shall be deemed to constitute a waiver of the Parties' rights to recover the difference between the rates ordered in the first phase of Docket No. 14361-U and the rates ordered in the second phase of this Docket pursuant to the Georgia Public Service Commission's Letter Order.

6. All of the other provisions of the Agreement shall remain in full force and effect.

7. Either or both of the Parties is authorized to submit this Amendment to the respective state regulatory authorities for approval subject to Section 252(e) of the Federal Telecommunications Act of 1996.

IN WITNESS WHEREOF, the Parties have executed this Amendment the day and year written below.

BellSouth Telecommunications, Inc.	**DPI-Teleconnect, LLC**
By: Kristen E. Shore	By: David B. Dewart
Name: Kristen E. Shore	Name: DAVID B. DEWART
Title: Director	Title: PRESIDENT + CEO
Date: 11/16/06	Date: 11/14/06

RESALE DISCOUNTS & RATES - Georgia														Attachment: 1 Exh: D			
CATEGORY		RATE ELEMENTS	Interim	Zone	BCS	USOC	RATES($)					Svc Order Submitted Elec per LSR	Svc Order Submitted Manually per LSR	Incremental Charge - Manual Svc Order vs. Electronic-1st	Incremental Charge - Manual Svc Order vs. Electronic-Add'l	Incremental Charge - Manual Svc Order vs. Electronic-Disc 1st	Incremental Charge - Manual Svc Order vs. Electronic-Disc Add'l
								Nonrecurring		Nonrecurring Disconnect		OSS Rates($)					
							Rec	First	Add'l	First	Add'l	SOMEC	SOMAN	SOMAN	SOMAN	SOMAN	SOMAN
ODUF/EODUF SERVICES																	
	OPTIONAL DAILY USAGE FILE (ODUF)																
		ODUF: Recording, per message					0.000007										
		ODUF: Message Processing, per message					0.002165										
		ODUF: Message Processing, per Magnetic Tape provisioned					36.02										
		ODUF: Data Transmission (CONNECT:DIRECT), per message					0.00010888										
	ENHANCED OPTIONAL DAILY USAGE FILE (EODUF)																
		EODUF: Message Processing, per message					0.229077										

UNBUNDLED NETWORK ELEMENTS - Georgia														Attachement 2 Exh: A			
CATEGORY	RATE ELEMENTS	Interim	Zone	BCS	USOC	RATES($)					Svc Order Submitted Elec per LSR	Svc Order Submitted Manually per LSR	Incremental Charge - Manual Svc Order vs. Electronic-1st	Incremental Charge - Manual Svc Order vs. Electronic-Add'l	Incremental Charge - Manual Svc Order vs. Electronic-Disc 1st	Incremental Charge - Manual Svc Order vs. Electronic-Disc Add'l
							Nonrecurring		Nonrecurring Disconnect		OSS Rates($)					
						Rec	First	Add'l	First	Add'l	SOMEC	SOMAN	SOMAN	SOMAN	SOMAN	SOMAN
	The "Zone" shown in the sections for stand-alone loops or loops as part of a combination refers to Geographically Deaveraged UNE Zones. To view Geographically Deaveraged UNE Zone Designations by Central Office, refer to internet Website: http://www.interconnection.bellsouth.com/become_a_clec/html/interconnection.htm															
OPERATIONS SUPPORT SYSTEMS (OSS) - "REGIONAL RATES"																
	OSS - Manual Service Order Charge, Per Local Service Request (LSR) - UNE Only				SOMAN		11.71	0.00	6.13	0.00						
UNBUNDLED EXCHANGE ACCESS LOOP																
2-WIRE ANALOG VOICE GRADE LOOP																
	2-Wire Analog Voice Grade Loop - Service Level 1- Zone 1		1	UEANL	UEAL2	12.08	39.98	9.98	5.61	1.72						
	2-Wire Analog Voice Grade Loop - Service Level 1- Zone 2		2	UEANL	UEAL2	17.43	39.98	9.98	5.61	1.72						
	2-Wire Analog Voice Grade Loop - Service Level 1- Zone 3		3	UEANL	UEAL2	35.09	39.98	9.98	5.61	1.72						
	2-Wire Analog Voice Grade Loop - Service Level 1- Zone 1		1	UEANL	UEASL	12.08	39.98	9.98	5.61	1.72						
	2-Wire Analog Voice Grade Loop - Service Level 1- Zone 2		2	UEANL	UEASL	17.43	39.98	9.98	5.61	1.72						
	2-Wire Analog Voice Grade Loop - Service Level 1- Zone 3		3	UEANL	UEASL	35.09	39.98	9.98	5.61	1.72						
	Manual Order Coordiantion for UVL-SL1s (per loop)			UEANL	UEAMC		18.90	18.90								
	Order Coordination for Specified Conversion Time for UVL-SL1 (per LSR)			UEANL	OCOSL		57.73									
	Unbundled Non-Design Voice Loop, billing for BST providing make-up (Engineering Information - E.I.)			UEANL	UEANM		7.29	7.29								
2-WIRE UNBUNDLED COPPER LOOP - NON-DESIGNED																
	2 Wire Unbundled Copper Loop Non-Designed- Zone 1		1	UEQ	UEQ2X	11.02	44.69	22.40	0.00	0.00						
	2 Wire Unbundled Copper Loop Non-Designed- Zone 2		2	UEQ	UEQ2X	12.72	44.69	22.40	0.00	0.00						
	2 Wire Unbundled Copper Loop Non-Designed-Zone 3		3	UEQ	UEQ2X	20.22	44.69	22.40	0.00	0.00						
	Manual Order Coordination 2 Wire Unbundled Copper Loop - Non-Designed (per loop)			UEQ	USBMC		18.90	18.90								
	Unbundled Copper Loop - Non-Design, billing for BST providing make-up (Engineering Information - E.I.)			UEQ	UEQMU		7.29	7.29								
UNBUNDLED EXCHANGE ACCESS LOOP																
2-WIRE ANALOG VOICE GRADE LOOP																
	2-Wire Analog Voice Grade Loop - Service Level 2 w/Loop or Ground Start Signaling - Zone 1		1	UEA	UEAL2	13.32	79.78	24.62	18.90	7.86						
	2-Wire Analog Voice Grade Loop - Service Level 2 w/Loop or Ground Start Signaling - Zone 2		2	UEA	UEAL2	18.66	79.78	24.62	18.90	7.86						
	2-Wire Analog Voice Grade Loop - Service Level 2 w/Loop or Ground Start Signaling - Zone 3		3	UEA	UEAL2	36.33	79.78	24.62	18.90	7.86						
	2-Wire Analog Voice Grade Loop - Service Level 2 w/Reverse Battery Signaling - Zone 1		1	UEA	UEAR2	13.32	79.78	24.62	18.90	7.86						
	2-Wire Analog Voice Grade Loop - Service Level 2 w/Reverse Battery Signaling - Zone 2		2	UEA	UEAR2	18.66	79.78	24.62	18.90	7.86						
	2-Wire Analog Voice Grade Loop - Service Level 2 w/Reverse Battery Signaling - Zone 3		3	UEA	UEAR2	36.33	79.78	24.62	18.90	7.86						
	Switch-as-is Conversion rate per UNE Loop, Single LSR (per DS0)*			UEA	URESL		5.69	5.69								
	Switch-as-is Conversion rate per UNE Loop, Spreadsheet (per DS0)*			UEA	URESP		5.69	5.69								
4-WIRE ANALOG VOICE GRADE LOOP																
	4-Wire Analog Voice Grade Loop - Zone 1		1	UEA	UEAL4	21.04	92.92	28.14	19.50	8.12						
	4-Wire Analog Voice Grade Loop - Zone 2		2	UEA	UEAL4	24.49	92.92	28.14	19.50	8.12						
	4-Wire Analog Voice Grade Loop - Zone 3		3	UEA	UEAL4	33.40	92.92	28.14	19.50	8.12						
	Switch-as-is Conversion rate per UNE Loop, Single LSR (per DS0)*			UEA	URESL		5.69	5.69								
	Switch-as-is Conversion rate per UNE Loop, Spreadsheet (per DS0)*			UEA	URESP		5.69	5.69								
2-WIRE ISDN DIGITAL GRADE LOOP																
	2-Wire ISDN Digital Grade Loop - Zone 1		1	UDN	U1L2X	21.89	180.06	35.25	18.23	6.97						
	2-Wire ISDN Digital Grade Loop - Zone 2		2	UDN	U1L2X	25.27	180.06	35.25	18.23	6.97						
	2-Wire ISDN Digital Grade Loop - Zone 3		3	UDN	U1L2X	40.17	180.06	35.25	18.23	6.97						
2-WIRE ASYMMETRICAL DIGITAL SUBSCRIBER LINE (ADSL) COMPATIBLE LOOP																

UNBUNDLED NETWORK ELEMENTS - Georgia														Attachement 2 Exh: A			
CATEGORY		RATE ELEMENTS	Interim	Zone	BCS	USOC	RATES($)					Svc Order Submitted Elec per LSR	Svc Order Submitted Manually per LSR	Incremental Charge - Manual Svc Order vs. Electronic-1st	Incremental Charge - Manual Svc Order vs. Electronic-Add'l	Incremental Charge - Manual Svc Order vs. Electronic-Disc 1st	Incremental Charge - Manual Svc Order vs. Electronic-Disc Add'l
								Nonrecurring		Nonrecurring Disconnect		OSS Rates($)					
							Rec	First	Add'l	First	Add'l	SOMEC	SOMAN	SOMAN	SOMAN	SOMAN	SOMAN
		2 Wire Unbundled ADSL Loop including manual service inquiry & facility reservation - Zone 1		1	UAL	UAL2X	11.23	44.69	31.55	0.00	0.00						
		2 Wire Unbundled ADSL Loop including manual service inquiry & facility reservation - Zone 2		2	UAL	UAL2X	12.97	44.69	31.55	0.00	0.00						
		2 Wire Unbundled ADSL Loop including manual service inquiry & facility reservation - Zone 3		3	UAL	UAL2X	20.62	44.69	31.55	0.00	0.00						
		2 Wire Unbundled ADSL Loop without manual service inquiry & facility reservaton - Zone 1		1	UAL	UAL2W	11.23	44.69	31.55	0.00	0.00						
		2 Wire Unbundled ADSL Loop without manual service inquiry & facility reservaton - Zone 2		2	UAL	UAL2W	12.97	44.69	31.55	0.00	0.00						
		2 Wire Unbundled ADSL Loop without manual service inquiry & facility reservaton - Zone 3		3	UAL	UAL2W	20.62	44.69	31.55	0.00	0.00						
	2-WIRE HIGH BIT RATE DIGITAL SUBSCRIBER LINE (HDSL) COMPATIBLE LOOP																
		2 Wire Unbundled HDSL Loop including manual service inquiry & facility reservation - Zone 1		1	UHL	UHL2X	7.88	44.69	31.55	0.00	0.00						
		2 Wire Unbundled HDSL Loop including manual service inquiry & facility reservation - Zone 2		2	UHL	UHL2X	9.09	44.69	31.55	0.00	0.00						
		2 Wire Unbundled HDSL Loop including manual service inquiry & facility reservation - Zone 3		3	UHL	UHL2X	14.48	44.69	31.55	0.00	0.00						
		2 Wire Unbundled HDSL Loop without manual service inquiry and facility reservation - Zone 1		1	UHL	UHL2W	7.88	44.69	31.55	0.00	0.00						
		2 Wire Unbundled HDSL Loop without manual service inquiry and facility reservation - Zone 2		2	UHL	UHL2W	9.09	44.69	31.55	0.00	0.00						
		2 Wire Unbundled HDSL Loop without manual service inquiry and facility reservation - Zone 3		3	UHL	UHL2W	14.48	44.69	31.55	0.00	0.00						
	4-WIRE HIGH BIT RATE DIGITAL SUBSCRIBER LINE (HDSL) COMPATIBLE LOOP																
		4 Wire Unbundled HDSL Loop including manual service inquiry and facility reservation - Zone 1		1	UHL	UHL4X	10.39	44.69	31.55	0.00	0.00						
		4-Wire Unbundled HDSL Loop including manual service inquiry and facility reservation - Zone 2		2	UHL	UHL4X	12.00	44.69	31.55	0.00	0.00						
		4-Wire Unbundled HDSL Loop including manual service inquiry and facility reservation - Zone 3		3	UHL	UHL4X	19.07	44.69	31.55	0.00	0.00						
		4-Wire Unbundled HDSL Loop without manual service inquiry and facility reservation - Zone 1		1	UHL	UHL4W	10.39	44.69	31.55	0.00	0.00						
		4-Wire Unbundled HDSL Loop without manual service inquiry and facility reservation - Zone 2		2	UHL	UHL4W	12.00	44.69	31.55	0.00	0.00						
		4-Wire Unbundled HDSL Loop without manual service inquiry and facility reservation - Zone 3		3	UHL	UHL4W	19.07	44.69	31.55	0.00	0.00						
	4-WIRE DS1 DIGITAL LOOP																
		4-Wire DS1 Digital Loop - Zone 1		1	USL	USLXX	49.41	211.72	72.42	38.20	7.19						
		4-Wire DS1 Digital Loop - Zone 2		2	USL	USLXX	52.55	211.72	72.42	38.20	7.19						
		4-Wire DS1 Digital Loop - Zone 3		3	USL	USLXX	68.40	211.72	72.42	38.20	7.19						
		Switch-as-is Conversion rate per UNE Loop, Single LSR (per DS1)*			USL	URESL		5.69	5.69								
		Switch-as-is Conversion rate per UNE Loop, Spreadsheet (per DS1)*			USL	URESP		5.69	5.69								
	4-WIRE 19.2, 56 OR 64 KBPS DIGITAL GRADE LOOP																
		4 Wire Unbundled Digital Loop 2.4 Kbps - Zone 1		1	UDL	UDL2X	25.81	196.47	36.96	18.80	7.19						
		4 Wire Unbundled Digital Loop 2.4 Kbps - Zone 2		2	UDL	UDL2X	31.54	196.47	36.96	18.80	7.19						
		4 Wire Unbundled Digital Loop 2.4 Kbps - Zone 3		3	UDL	UDL2X	42.38	196.47	36.96	18.80	7.19						
		4 Wire Unbundled Digital Loop 4.8 Kbps - Zone 1		1	UDL	UDL4X	25.81	196.47	36.96	18.80	7.19						
		4 Wire Unbundled Digital Loop 4.8 Kbps - Zone 2		2	UDL	UDL4X	31.54	196.47	36.96	18.80	7.19						
		4 Wire Unbundled Digital Loop 4.8 Kbps - Zone 3		3	UDL	UDL4X	42.38	196.47	36.96	18.80	7.19						
		4 Wire Unbundled Digital Loop 9.6 Kbps - Zone 1		1	UDL	UDL9X	25.81	196.47	36.96	18.80	7.19						
		4 Wire Unbundled Digital Loop 9.6 Kbps - Zone 2		2	UDL	UDL9X	31.54	196.47	36.96	18.80	7.19						
		4 Wire Unbundled Digital Loop 9.6 Kbps - Zone 3		3	UDL	UDL9X	42.38	196.47	36.96	18.80	7.19						
		4 Wire Unbundled Digital 19.2 Kbps - Zone 1		1	UDL	UDL19	25.81	196.47	36.96	18.80	7.19						
		4 Wire Unbundled Digital 19.2 Kbps - Zone 2		2	UDL	UDL19	31.54	196.47	36.96	18.80	7.19						
		4 Wire Unbundled Digital 19.2 Kbps - Zone 3		3	UDL	UDL19	42.38	196.47	36.96	18.80	7.19						

UNBUNDLED NETWORK ELEMENTS - Georgia														Attachement 2 Exh: A			
CATEGORY		RATE ELEMENTS	Interim	Zone	BCS	USOC	RATES($)					Svc Order Submitted Elec per LSR	Svc Order Submitted Manually per LSR	Incremental Charge - Manual Svc Order vs. Electronic-1st	Incremental Charge - Manual Svc Order vs. Electronic-Add'l	Incremental Charge - Manual Svc Order vs. Electronic-Disc 1st	Incremental Charge - Manual Svc Order vs. Electronic-Disc Add'l
								Nonrecurring		Nonrecurring Disconnect		OSS Rates($)					
							Rec	First	Add'l	First	Add'l	SOMEC	SOMAN	SOMAN	SOMAN	SOMAN	SOMAN
		4 Wire Unbundled Digital Loop 56 Kbps - Zone 1		1	UDL	UDL56	25.81	196.47	36.96	18.80	7.19						
		4 Wire Unbundled Digital Loop 56 Kbps - Zone 2		2	UDL	UDL56	31.54	196.47	36.96	18.80	7.19						
		4 Wire Unbundled Digital Loop 56 Kbps - Zone 3		3	UDL	UDL56	42.38	196.47	36.96	18.80	7.19						
		4 Wire Unbundled Digital Loop 64 Kbps - Zone 1		1	UDL	UDL64	25.81	196.47	36.96	18.80	7.19						
		4 Wire Unbundled Digital Loop 64 Kbps - Zone 2		2	UDL	UDL64	31.54	196.47	36.96	18.80	7.19						
		4 Wire Unbundled Digital Loop 64 Kbps - Zone 3		3	UDL	UDL64	42.38	196.47	36.96	18.80	7.19						
		Switch-as-is Conversion rate per UNE Loop, Single LSR (per DS0)*			UDL	URESL		5.69	5.69								
		Switch-as-is Conversion rate per UNE Loop, Spreadsheet (per DS0)*			UDL	URESP		5.69	5.69								
	2-WIRE Unbundled COPPER LOOP																
		2-Wire Unbundled Copper Loop-Designed including manual service inquiry & facility reservation - Zone 1		1	UCL	UCLPB	12.02	44.69	31.55	0.00	0.00						
		2-Wire Unbundled Copper Loop-Designed including manual service inquiry & facility reservation - Zone 2		2	UCL	UCLPB	13.88	44.69	31.55	0.00	0.00						
		2 Wire Unbundled Copper Loop-Designed including manual service inquiry & facility reservation - Zone 3		3	UCL	UCLPB	22.07	44.69	31.55	0.00	0.00						
		2-Wire Unbundled Copper Loop-Designed without manual service inquiry and facility reservation - Zone 1		1	UCL	UCLPW	12.02	44.69	31.55	0.00	0.00						
		2-Wire Unbundled Copper Loop-Designed without manual service inquiry and facility reservation - Zone 2		2	UCL	UCLPW	13.88	44.69	31.55	0.00	0.00						
		2-Wire Unbundled Copper Loop-Designed without manual service inquiry and facility reservation - Zone 3		3	UCL	UCLPW	22.07	44.69	31.55	0.00	0.00						
		Order Coordination for Unbundled Copper Loops (per loop)			UCL	UCLMC		18.90	18.90								
	4-WIRE COPPER LOOP																
		4-Wire Copper Loop-Designed including manual service inquiry and facility reservation - Zone 1		1	UCL	UCL4S	16.65	44.69	31.55	0.00	0.00						
		4-Wire Copper Loop-Designed including manual service inquiry and facility reservation - Zone 2		2	UCL	UCL4S	19.22	44.69	31.55	0.00	0.00						
		4-Wire Copper Loop-Designed including manual service inquiry and facility reservation - Zone 3		3	UCL	UCL4S	30.55	44.69	31.55	0.00	0.00						
		4-Wire Copper Loop-Designed without manual service inquiry and facility reservation - Zone 1		1	UCL	UCL4W	16.65	44.69	31.55	0.00	0.00						
		4-Wire Copper Loop-Designed without manual service inquiry and facility reservation - Zone 2		2	UCL	UCL4W	19.22	44.69	31.55	0.00	0.00						
		4-Wire Copper Loop-Designed without manual service inquiry and facility reservation - Zone 3		3	UCL	UCL4W	30.55	44.69	31.55	0.00	0.00						
		Order Coordination for Unbundled Copper Loops (per loop)			UCL	UCLMC		18.90	18.90								
		Order Coordination for Specified Conversion Time (per LSR)			UEA, UDN, UAL, UHL, UDL, USL	OCOSL		57.73									
UNE LOOP COMMINGLING																	
	UNE LOOP COMMINGLING (Loop as part of a Multi-bandwidth commingling arrangement)																
	2-WIRE ANALOG VOICE GRADE LOOP - COMMINGLING																
		2-Wire Analog Voice Grade Loop - Service Level 2 w/Loop or Ground Start Signaling - Zone 1		1	NTCVG	UEAL2	13.32	79.78	24.62	18.90	7.86						
		2-Wire Analog Voice Grade Loop - Service Level 2 w/Loop or Ground Start Signaling - Zone 2		2	NTCVG	UEAL2	18.66	79.78	24.62	18.90	7.86						
		2-Wire Analog Voice Grade Loop - Service Level 2 w/Loop or Ground Start Signaling - Zone 3		3	NTCVG	UEAL2	36.33	79.78	24.62	18.90	7.86						
		2-Wire Analog Voice Grade Loop - Service Level 2 w/Reverse Battery Signaling - Zone 1		1	NTCVG	UEAR2	13.32	79.78	24.62	18.90	7.86						
		2-Wire Analog Voice Grade Loop - Service Level 2 w/Reverse Battery Signaling - Zone 2		2	NTCVG	UEAR2	18.66	79.78	24.62	18.90	7.86						
		2-Wire Analog Voice Grade Loop - Service Level 2 w/Reverse Battery Signaling - Zone 3		3	NTCVG	UEAR2	36.33	79.78	24.62	18.90	7.86						
		Switch-as-is Conversion rate per UNE Loop, Single LSR (per DS0)*			NTCVG	URESL		5.69	5.69								
		Switch-as-is Conversion rate per UNE Loop, Spreadsheet (per DS0)*			NTCVG	URESP		5.69	5.69								

UNBUNDLED NETWORK ELEMENTS - Georgia														Attachement 2 Exh: A			
CATEGORY		RATE ELEMENTS	Interim	Zone	BCS	USOC	RATES($)					Svc Order Submitted Elec per LSR	Svc Order Submitted Manually per LSR	Incremental Charge - Manual Svc Order vs. Electronic-1st	Incremental Charge - Manual Svc Order vs. Electronic-Add'l	Incremental Charge - Manual Svc Order vs. Electronic-Disc 1st	Incremental Charge - Manual Svc Order vs. Electronic-Disc Add'l
								Nonrecurring		Nonrecurring Disconnect		OSS Rates($)					
							Rec	First	Add'l	First	Add'l	SOMEC	SOMAN	SOMAN	SOMAN	SOMAN	SOMAN
	4-WIRE ANALOG VOICE GRADE LOOP																
		4-Wire Analog Voice Grade Loop - Zone 1		1	NTCVG	UEAL4	21.04	92.92	28.14	19.50	8.12						
		4-Wire Analog Voice Grade Loop - Zone 2		2	NTCVG	UEAL4	24.49	92.92	28.14	19.50	8.12						
		4-Wire Analog Voice Grade Loop - Zone 3		3	NTCVG	UEAL4	33.40	92.92	28.14	19.50	8.12						
		Switch-as-is Conversion rate per UNE Loop, Single LSR (per DS0)*			NTCVG	URESL		5.69	5.69								
		Switch-as-is Conversion rate per UNE Loop, Spreadsheet (per DS0)*			NTCVG	URESP		5.69	5.69								
	4-WIRE DS1 DIGITAL LOOP - COMMINGLING																
		4-Wire DS1 Digital Loop - Zone 1		1	NTCD1	USLXX	49.41	211.72	72.42	38.20	7.19						
		4-Wire DS1 Digital Loop - Zone 2		2	NTCD1	USLXX	52.55	211.72	72.42	38.20	7.19						
		4-Wire DS1 Digital Loop - Zone 3		3	NTCD1	USLXX	68.40	211.72	72.42	38.20	7.19						
		Switch-as-is Conversion rate per UNE Loop, Single LSR (per DS1)*			NTCD1	URESL		5.69	5.69								
		Switch-as-is Conversion rate per UNE Loop, Spreadsheet (per DS1)*			NTCD1	URESP		5.69	5.69								
	4-WIRE 19.2, 56 OR 64 KBPS DIGITAL GRADE LOOP - COMMINGLING																
		4 Wire Unbundled Digital Loop 2.4 Kbps - Zone 1		1	NTCUD	UDL2X	25.81	196.47	36.96	18.80	7.19						
		4 Wire Unbundled Digital Loop 2.4 Kbps - Zone 2		2	NTCUD	UDL2X	31.54	196.47	36.96	18.80	7.19						
		4 Wire Unbundled Digital Loop 2.4 Kbps - Zone 3		3	NTCUD	UDL2X	42.38	196.47	36.96	18.80	7.19						
		4 Wire Unbundled Digital Loop 4.8 Kbps - Zone 1		1	NTCUD	UDL4X	25.81	196.47	36.96	18.80	7.19						
		4 Wire Unbundled Digital Loop 4.8 Kbps - Zone 2		2	NTCUD	UDL4X	31.54	196.47	36.96	18.80	7.19						
		4 Wire Unbundled Digital Loop 4.8 Kbps - Zone 3		3	NTCUD	UDL4X	42.38	196.47	36.96	18.80	7.19						
		4 Wire Unbundled Digital Loop 9.6 Kbps - Zone 1		1	NTCUD	UDL9X	25.81	196.47	36.96	18.80	7.19						
		4 Wire Unbundled Digital Loop 9.6 Kbps - Zone 2		2	NTCUD	UDL9X	31.54	196.47	36.96	18.80	7.19						
		4 Wire Unbundled Digital Loop 9.6 Kbps - Zone 3		3	NTCUD	UDL9X	42.38	196.47	36.96	18.80	7.19						
		4 Wire Unbundled Digital 19.2 Kbps - Zone 1		1	NTCUD	UDL19	25.81	196.47	36.96	18.80	7.19						
		4 Wire Unbundled Digital 19.2 Kbps - Zone 2		2	NTCUD	UDL19	31.54	196.47	36.96	18.80	7.19						
		4 Wire Unbundled Digital 19.2 Kbps - Zone 3		3	NTCUD	UDL19	42.38	196.47	36.96	18.80	7.19						
		4 Wire Unbundled Digital Loop 56 Kbps - Zone 1		1	NTCUD	UDL56	25.81	196.47	36.96	18.80	7.19						
		4 Wire Unbundled Digital Loop 56 Kbps - Zone 2		2	NTCUD	UDL56	31.54	196.47	36.96	18.80	7.19						
		4 Wire Unbundled Digital Loop 56 Kbps - Zone 3		3	NTCUD	UDL56	42.38	196.47	36.96	18.80	7.19						
		4 Wire Unbundled Digital Loop 64 Kbps - Zone 1		1	NTCUD	UDL64	25.81	196.47	36.96	18.80	7.19						
		4 Wire Unbundled Digital Loop 64 Kbps - Zone 2		2	NTCUD	UDL64	31.54	196.47	36.96	18.80	7.19						
		4 Wire Unbundled Digital Loop 64 Kbps - Zone 3		3	NTCUD	UDL64	42.38	196.47	36.96	18.80	7.19						
		Order Coordination for Specified Conversion Time (per LSR)			NTCVG, NTCUD, NTCD1	OCOSL		57.73									
		Switch-as-is Conversion rate per UNE Loop, Single LSR (per DS0)*			NTCUD	URESL		5.69	5.69								
		Switch-as-is Conversion rate per UNE Loop, Spreadsheet (per DS0)*			NTCUD	URESP		5.69	5.69								
LOOP MODIFICATION																	
		Unbundled Loop Modification, Removal of Load Coils - 2 Wire pair less than or equal to 18k ft, per Unbundled Loop			UAL, UHL, UCL, UEQ, ULS, UEA, UEANL, UEPSR, UEPSB	ULM2L		0.00	0.00								
		Unbundled Loop Modification Removal of Load Coils - 4 Wire less than or equal to 18K ft, per Unbundled Loop			UHL, UCL, UEA	ULM4L		0.00	0.00								
		Unbundled Loop Modification Removal of Bridged Tap Removal, per Unbundled Loop			UAL, UHL, UCL, UEQ, ULS, UEA, UEANL, UEPSR, UEPSB	ULMBT		17.91									
SUB-LOOPS																	
	Sub-Loop Distribution																
		Sub-Loop - Per Cross Box Location - CLEC Feeder Facility Set-Up			UEANL, UEF	USBSA		255.51									
		Sub-Loop - Per Cross Box Location - Per 25 Pair Panel Set-Up			UEANL, UEF	USBSB		7.29									

UNBUNDLED NETWORK ELEMENTS - Georgia														Attachement 2 Exh: A			
CATEGORY		RATE ELEMENTS	Interim	Zone	BCS	USOC	RATES($)					Svc Order Submitted Elec per LSR	Svc Order Submitted Manually per LSR	Incremental Charge - Manual Svc Order vs. Electronic-1st	Incremental Charge - Manual Svc Order vs. Electronic-Add'l	Incremental Charge - Manual Svc Order vs. Electronic-Disc 1st	Incremental Charge - Manual Svc Order vs. Electronic-Disc Add'l
								Nonrecurring		Nonrecurring Disconnect		OSS Rates($)					
							Rec	First	Add'l	First	Add'l	SOMEC	SOMAN	SOMAN	SOMAN	SOMAN	SOMAN
		Sub-Loop - Per Building Equipment Room - CLEC Feeder Facility Set-Up			UEANL	USBSC		174.92									
		Sub-Loop - Per Building Equipment Room - Per 25 Pair Panel Set-Up			UEANL	USBSD		51.56									
		Unbundled Sub-Loops, Riser Cable, 2-Wire per Loop, Working and Spare Loop Activation			UEANL	USBRC	3.71	28.43	3.85	2.20	0.01						
		Unbundled Sub-Loops, Riser Cable, 4-Wire per Loop, Working and Spare Loop Activation			UEANL	USBRD	7.90	31.04	4.79	2.27	0.01						
		Sub-Loop Distribution Per 2-Wire Analog Voice Grade Loop - Zone 1		1	UEANL	USBN2	7.45	28.43	3.85	2.20	0.01						
		Sub-Loop Distribution Per 2-Wire Analog Voice Grade Loop - Zone 2		2	UEANL	USBN2	11.18	28.43	3.85	2.20	0.01						
		Sub-Loop Distribution Per 2-Wire Analog Voice Grade Loop - Zone 3		3	UEANL	USBN2	21.46	28.43	3.85	2.20	0.01						
		Sub-Loop Distribution Per 4-Wire Analog Voice Grade Loop - Zone 1		1	UEANL	USBN4	6.91	31.04	4.79	2.27	0.01						
		Sub-Loop Distribution Per 4-Wire Analog Voice Grade Loop - Zone 2		2	UEANL	USBN4	10.98	31.04	4.79	2.27	0.01						
		Sub-Loop Distribution Per 4-Wire Analog Voice Grade Loop - Zone 3		3	UEANL	USBN4	20.32	31.04	4.79	2.27	0.01						
		Order Coordination for Unbundled Sub-Loops, per sub-loop pair			UEANL	USBMC		18.90	18.90								
		Sub-Loop 2-Wire Intrabuilding Network Cable (INC)			UEANL	USBR2	3.71	28.43	3.85	2.20	0.01						
		Order Coordination for Unbundled Sub-Loops, per sub-loop pair			UEANL	USBMC		18.90	18.90								
		Sub-Loop 4-Wire Intrabuilding Network Cable (INC)			UEANL	USBR4	7.90	31.04	4.79	2.27	0.01						
		Order Coordination for Unbundled Sub-Loops, per sub-loop pair			UEANL	USBMC		18.90	18.90								
		2 Wire Copper Unbundled Sub-Loop Distribution - Zone 1		1	UEF	UCS2X	6.88	28.43	3.85	2.20	0.01						
		2 Wire Copper Unbundled Sub-Loop Distribution - Zone 2		2	UEF	UCS2X	8.32	28.43	3.85	2.20	0.01						
		2 Wire Copper Unbundled Sub-Loop Distribution - Zone 3		3	UEF	UCS2X	10.26	28.43	3.85	2.20	0.01						
		Order Coordination for Unbundled Sub-Loops, per sub-loop pair			UEF	USBMC		18.90	18.90								
		4 Wire Copper Unbundled Sub-Loop Distribution - Zone 1		1	UEF	UCS4X	7.55	31.04	4.79	2.27	0.01						
		4 Wire Copper Unbundled Sub-Loop Distribution - Zone 2		2	UEF	UCS4X	7.12	31.04	4.79	2.27	0.01						
		4 Wire Copper Unbundled Sub-Loop Distribution - Zone 3		3	UEF	UCS4X	10.26	31.04	4.79	2.27	0.01						
		Order Coordination for Unbundled Sub-Loops, per sub-loop pair			UEF	USBMC		18.90	18.90								
	Unbundled Sub-Loop Modification																
		Unbundled Sub-Loop Modification - 2-W Copper Dist Load Coil/Equip Removal per 2-W PR			UEF	ULM2X		0.00	0.00								
		Unbundled Sub-loop Modification - 4-W Copper Dist Load Coil/Equip Removal per 4-W PR			UEF	ULM4X		0.00	0.00								
		Unbundled Loop Modification, Removal of bridge Tap, per unbundled loop			UEF	ULMBT		0.00	0.00								
	Unbundled Network Terminating Wire (UNTW)																
		Unbundled Network Terminating Wire (UNTW) per Pair			UENTW	UENPP	0.5325	25.10	12.27								
	Network Interface Device (NID)																
		Network Interface Device (NID) - 1-2 lines			UENTW	UND12		32.82	20.67								
		Network Interface Device (NID) - 1-6 lines			UENTW	UND16		55.97	43.82								
		Network Interface Device Cross Connect - 2 W			UENTW	UNDC2		2.45	2.45								
		Network Interface Device Cross Connect - 4W			UENTW	UNDC4		2.45	2.45								
LOOP MAKE-UP																	
		Loop Makeup - Preordering Without Reservation, per working or spare facility queried (Manual).			UMK	UMKLW		15.18	15.18								
		Loop Makeup - Preordering With Reservation, per spare facility queried (Manual).			UMK	UMKLP		19.83	19.83								
		Loop Makeup--With or Without Reservation, per working or spare facility queried (Mechanized)			UMK	UMKMQ		0.823	0.823								

UNBUNDLED NETWORK ELEMENTS - Georgia														Attachement 2 Exh: A			
CATEGORY		RATE ELEMENTS	Interim	Zone	BCS	USOC	RATES($)					Svc Order Submitted Elec per LSR	Svc Order Submitted Manually per LSR	Incremental Charge - Manual Svc Order vs. Electronic-1st	Incremental Charge - Manual Svc Order vs. Electronic-Add'l	Incremental Charge - Manual Svc Order vs. Electronic-Disc 1st	Incremental Charge - Manual Svc Order vs. Electronic-Disc Add'l
								Nonrecurring		Nonrecurring Disconnect		OSS Rates($)					
							Rec	First	Add'l	First	Add'l	SOMEC	SOMAN	SOMAN	SOMAN	SOMAN	SOMAN
LINE SPLITTING																	
	END USER ORDERING-CENTRAL OFFICE BASED																
		Line Splitting - per line activation BST owned - physical			UEPSR UEPSB	UREBP	0.0197	34.43	22.35	10.38	7.34						
		Line Splitting - per line activation BST owned - virtual			UEPSR UEPSB	UREBV	0.0188	34.43	22.35	10.38	7.34						
	PHYSICAL COLLOCATION																
		Physical Collocation-2 Wire Cross Connects (Loop) for Line Splitting			UEPSR UEPSB	PE1LS	0.0202	0.00	0.00								
	VIRTUAL COLLOCATION																
		Virtual Collocation-2 Wire Cross Connects (Loop) for Line Splitting			UEPSR UEPSB	VE1LS	0.0192	0.00	0.00	0.00	0.00						
UNBUNDLED DEDICATED TRANSPORT																	
	INTEROFFICE CHANNEL - DEDICATED TRANSPORT																
		Interoffice Channel - 2-Wire Voice Grade - per mile			U1TVX	1L5XX	0.0059										
		Interoffice Channel - 2-Wire Voice Grade - Facility Termination			U1TVX	U1TV2	13.15	48.41	19.46	16.56	4.99						
		Interoffice Channel - 2-Wire Voice Grade Rev Bat. - per mile			U1TVX	1L5XX	0.0059										
		Interoffice Channel - 2-Wire VG Rev Bat. - Facility Termination			U1TVX	U1TR2	13.15	48.41	19.46	16.56	4.99						
		Interoffice Channel - 4-Wire Voice Grade - per mile			U1TVX	1L5XX	0.0059										
		Interoffice Channel - 4- Wire Voice Grade - Facility Termination			U1TVX	U1TV4	11.01	48.41	19.46	16.56	4.99						
		Interoffice Channel - 56 kbps - per mile			U1TDX	1L5XX	0.0059										
		Interoffice Channel - 56 kbps - Facility Termination			U1TDX	U1TD5	8.00	48.41	19.46	16.56	4.99						
		Interoffice Channel - 64 kbps - per mile			U1TDX	1L5XX	0.0059										
		Interoffice Channel - 64 kbps - Facility Termination			U1TDX	U1TD6	8.00	48.41	19.46	16.56	4.99						
		Interoffice Channel - DS1 - per mile			U1TD1	1L5XX	0.1199										
		Interoffice Channel - DS1 - Facility Termination			U1TD1	U1TF1	34.93	110.92	80.20	31.33	21.71						
		Interoffice Channel - DS3 - per mile			U1TD3	1L5XX	2.63										
		Interoffice Channel - DS3 - Facility Termination			U1TD3	U1TF3	349.42	320.16	86.24	66.71	52.76						
		Interoffice Channel - STS-1 - per mile			U1TS1	1L5XX	2.63										
		Interoffice Channel - STS-1 - Facility Termination			U1TS1	U1TFS	366.43	320.16	86.24	66.71	52.76						
	UNBUNDLED DARK FIBER																
		Dark Fiber - Interoffice Transport, Per Four Fiber Strands, Per Route Mile Or Fraction Thereof			UDF, UDFCX	1L5DF	24.17										
		Dark Fiber - Interoffice Transport, Per Four Fiber Strands, Per Route Mile Or Fraction Thereof			UDF, UDFCX	UDF14		1,774.79	89.66	73.57	18.69						
HIGH CAPACITY UNBUNDLED LOCAL LOOP																	
	DS-3/STS-1 UNBUNDLED LOCAL LOOP - Stand Alone																
		DS3 Unbundled Local Loop - per mile			UE3	1L5ND	11.40										
		DS3 Unbundled Local Loop - Facility Termination			UE3	UE3PX	258.44	1,751.51	131.77	112.80	75.81						
		STS-1Unbundled Local Loop - per mile			UDLSX	1L5ND	11.40										
		STS-1 Unbundled Local Loop - Facility Termination			UDLSX	UDLS1	311.51	1,751.51	131.77	112.80	75.81						
ENHANCED EXTENDED LINK (EELs)																	
	Network Elements Used in Combinations																
		2-Wire VG Loop (SL2) in Combination - Zone 1		1	UNCVX	UEAL2	13.32	195.75	36.35	18.40	6.86						
		2-Wire VG Loop (SL2) in Combination - Zone 2		2	UNCVX	UEAL2	18.66	195.75	36.35	18.40	6.86						
		2-Wire VG Loop (SL2) in Combination - Zone 3		3	UNCVX	UEAL2	36.33	195.75	36.35	18.40	6.86						
		4-Wire Analog Voice Grade Loop in Combination - Zone 1		1	UNCVX	UEAL4	21.04	195.75	36.35	18.40	6.86						
		4-Wire Analog Voice Grade Loop in Combination - Zone 2		2	UNCVX	UEAL4	24.49	195.75	36.35	18.40	6.86						
		4-Wire Analog Voice Grade Loop in Combination - Zone 3		3	UNCVX	UEAL4	33.40	195.75	36.35	18.40	6.86						
		2-Wire ISDN Loop in Combination - Zone 1		1	UNCNX	U1L2X	21.89	195.75	36.35	18.40	6.86						
		2-Wire ISDN Loop in Combination - Zone 2		2	UNCNX	U1L2X	25.27	195.75	36.35	18.40	6.86						
		2-Wire ISDN Loop in Combination - Zone 3		3	UNCNX	U1L2X	40.17	195.75	36.35	18.40	6.86						
		4-Wire 56Kbps Digital Grade Loop in Combination - Zone 1		1	UNCDX	UDL56	25.81	195.75	36.35	18.40	6.86						
		4-Wire 56Kbps Digital Grade Loop in Combination - Zone 2		2	UNCDX	UDL56	31.54	195.75	36.35	18.40	6.86						
		4-Wire 56Kbps Digital Grade Loop in Combination - Zone 3		3	UNCDX	UDL56	42.38	195.75	36.35	18.40	6.86						
		4-Wire 64Kbps Digital Grade Loop in Combination - Zone 1		1	UNCDX	UDL64	25.81	195.75	36.35	18.40	6.86						
		4-Wire 64Kbps Digital Grade Loop in Combination - Zone 2		2	UNCDX	UDL64	31.54	195.75	36.35	18.40	6.86						
		4-Wire 64Kbps Digital Grade Loop in Combination - Zone 3		3	UNCDX	UDL64	42.38	195.75	36.35	18.40	6.86						
		4-Wire DS1 Digital Loop in Combination - Zone 1		1	UNC1X	USLXX	49.41	209.25	70.37	37.87	6.86						

UNBUNDLED NETWORK ELEMENTS - Georgia														Attachement 2 Exh: A			
CATEGORY	RATE ELEMENTS	Interim	Zone	BCS	USOC	RATES($)					Svc Order Submitted Elec per LSR	Svc Order Submitted Manually per LSR	Incremental Charge - Manual Svc Order vs. Electronic-1st	Incremental Charge - Manual Svc Order vs. Electronic-Add'l	Incremental Charge - Manual Svc Order vs. Electronic-Disc 1st	Incremental Charge - Manual Svc Order vs. Electronic-Disc Add'l
							Nonrecurring		Nonrecurring Disconnect		OSS Rates($)					
						Rec	First	Add'l	First	Add'l	SOMEC	SOMAN	SOMAN	SOMAN	SOMAN	SOMAN
	4-Wire DS1 Digital Loop in Combination - Zone 2		2	UNC1X	USLXX	52.55	209.25	70.37	37.87	6.86						
	4-Wire DS1 Digital Loop in Combination - Zone 3		3	UNC1X	USLXX	68.40	209.25	70.37	37.87	6.86						
	DS3 Local Loop in combination - per mile			UNC3X	1L5ND	11.40										
	DS3 Local Loop in combination - Facility Termination			UNC3X	UE3PX	258.44	1,259.23	628.22	41.49	20.74						
	STS-1 Local Loop in combination - per mile			UNCSX	1L5ND	11.40										
	STS-1 Local Loop in combination - Facility Termination			UNCSX	UDLS1	311.51	1,259.23	628.22	41.49	20.74						
	Interoffice Channel in combination - 2-wire VG - per mile			UNCVX	1L5XX	0.0059										
	Interoffice Channel in combination - 2-wire VG - Facility Termination			UNCVX	U1TV2	13.15	66.47	33.57	43.38	27.57						
	Interoffice Channel in combination - 4-wire VG - per mile			UNCVX	1L5XX	0.0059										
	Interoffice Channel in combination - 4-wire VG - Facility Termination			UNCVX	U1TV4	11.01	66.47	33.57	43.38	27.57						
	Interoffice Channel in combination - 4-wire 56 kbps - per mile			UNCDX	1L5XX	0.0059										
	Interoffice Channel in combination - 4-wire 56 kbps - Facility Termination			UNCDX	U1TD5	8.00	66.47	33.57	43.38	27.57						
	Interoffice Channel in combination - 4-wire 64 kbps - per mile			UNCDX	1L5XX	0.0059										
	Interoffice Channel in combination - 4-wire 64 kbps - Facility Termination			UNCDX	U1TD6	8.00	66.47	33.57	43.38	27.57						
	Interoffice Channel in combination - DS1 - per mile			UNC1X	1L5XX	0.1199										
	Interoffice Channel in combination - DS1 Facility Termination			UNC1X	U1TF1	34.93	87.67	45.69	43.76	27.95						
	Interoffice Channel in combination - DS3 - per mile			UNC3X	1L5XX	2.63										
	Interoffice Channel in combination - DS3 - Facility Termination			UNC3X	U1TF3	349.42	325.59	76.99	49.51	32.85						
	Interoffice Channel in combination - STS-1 - per mile			UNCSX	1L5XX	2.63										
	Interoffice Channel in combination - STS-1 Facility Termination			UNCSX	U1TFS	366.43	325.59	76.99	49.51	32.85						
ADDITIONAL NETWORK ELEMENTS																
Optional Features & Functions:																
	DS1/DS0 Channel System			UNC1X	MQ1	71.23	86.01	0.00	0.00	0.00						
	DS3/DS1Channel System			UNC3X, UNCSX	MQ3	124.39	0.00	0.00	0.00	0.00						
	Voice Grade COCI in combination			UNCVX	1D1VG	0.479	27.30	2.90	16.85	1.04						
	Voice Grade COCI - for Stand Alone Local Loop			UEA	1D1VG	0.479	27.30	2.90	16.85	1.04						
	Voice Grade COCI - for connection to a channelized DS1 Local Channel in the same SWC as collocation			U1TUC	1D1VG	0.479	27.30	2.90	16.85	1.04						
	OCU-DP COCI (2.4-64kbs) in combination			UNCDX	1D1DD	1.02	27.30	2.90	16.85	1.04						
	OCU-DP COCI (2.4-64kbs) - for Stand Alone Local Loop			UDL	1D1DD	1.02	27.30	2.90	16.85	1.04						
	OCU-DP COCI (2.4-64kbs) - for connection to a channelized DS1 Local Channel in the same SWC as collocation			U1TUD	1D1DD	1.02	27.30	2.90	16.85	1.04						
	2-wire ISDN COCI (BRITE) in combination			UNCNX	UC1CA	1.70	27.30	2.90	16.85	1.04						
	2-wire ISDN COCI (BRITE) - for a Local Loop			UDN	UC1CA	1.70	27.30	2.90	16.85	1.04						
	2-wire ISDN COCI (BRITE) - for connection to a channelized DS1 Local Channel in the same SWC as collocation			U1TUB	UC1CA	1.70	27.30	2.90	16.85	1.04						
	DS1 COCI in combination			UNC1X	UC1D1	7.50	27.30	2.90	16.85	1.04						
	DS1 COCI - for Stand Alone Local Channel			ULDD1	UC1D1	7.50	27.30	2.90	16.85	1.04						
	DS1 COCI - for Stand Alone Interoffice Channel			U1TD1	UC1D1	7.50	27.30	2.90	16.85	1.04						
	DS1 COCI - for Stand Alone Local Loop			USL	UC1D1	7.50	27.30	2.90	16.85	1.04						
	DS1 COCI - for connection to a channelized DS1 Local Channel in the same SWC as collocation			U1TUA	UC1D1	7.50	27.30	2.90	16.85	1.04						
	Wholesale to UNE, Switch-As-Is Conversion Charge*			UNCVX, U1TVX, UNCDX, U1TDX, UNC1X, U1TD1,UNC3X, U1TD3, UNCSX, U1TS1, UDF,UDFCX	UNCCC		5.69	5.69	6.60	6.60						
Access to DCS - Customer Reconfiguration (FlexServ)																
	Customer Reconfiguration Establishment						1.40		1.63							
	DS1 DCS Termination with DS0 Switching					20.08	24.87	18.91	15.02	11.94						
	DS1 DCS Termination with DS1 Switching					7.24	18.16	12.19	11.13	8.05						
	DS3 DCS Termination with DS1 Switching					128.34	24.87	18.91	15.02	11.94						
COMMINGLING																

UNBUNDLED NETWORK ELEMENTS - Georgia														Attachement 2 Exh: A			
CATEGORY		RATE ELEMENTS	Interim	Zone	BCS	USOC	RATES($)					Svc Order Submitted Elec per LSR	Svc Order Submitted Manually per LSR	Incremental Charge - Manual Svc Order vs. Electronic-1st	Incremental Charge - Manual Svc Order vs. Electronic-Add'l	Incremental Charge - Manual Svc Order vs. Electronic-Disc 1st	Incremental Charge - Manual Svc Order vs. Electronic-Disc Add'l
								Nonrecurring		Nonrecurring Disconnect		OSS Rates($)					
							Rec	First	Add'l	First	Add'l	SOMEC	SOMAN	SOMAN	SOMAN	SOMAN	SOMAN
	Commingled (UNE part of single bandwidth circuit)																
		Commingled VG COCI			XDV2X, NTCVG	1D1VG	0.479	27.30	2.90	16.85	1.04						
		Commingled Digital COCI			XDV6X, NTCUD	1D1DD	1.02	27.30	2.90	16.85	1.04						
		Commingled ISDN COCI			XDD4X	UC1CA	1.70	27.30	2.90	16.85	1.04						
		Commingled 2-wire VG Interoffice Channel			XDV2X	U1TV2	13.15	66.47	33.57	43.38	27.57						
		Commingled 4-wire VG Interoffice Channel			XDV6X	U1TV4	11.01	66.47	33.57	43.38	27.57						
		Commingled 56kbps Interoffice Channel			XDD4X	U1TD5	8.00	66.47	33.57	43.38	27.57						
		Commingled 64kbps Interoffice Channel			XDD4X	U1TD6	8.00	66.47	33.57	43.38	27.57						
		Commingled VG/DS0 Interoffice Channel Mileage			XDV2X, XDV6X, XDD4X	1L5XX	0.0059										
		Commingled 2-wire Local Loop Zone 1		1	XDV2X	UEAL2	13.32	195.75	36.35	18.40	6.86						
		Commingled 2-wire Local Loop Zone 2		2	XDV2X	UEAL2	18.66	195.75	36.35	18.40	6.86						
		Commingled 2-wire Local Loop Zone 3		3	XDV2X	UEAL2	36.33	195.75	36.35	18.40	6.86						
		Commingled 4-wire Local Loop Zone 1		1	XDV6X	UEAL4	21.04	195.75	36.35	18.40	6.86						
		Commingled 4-wire Local Loop Zone 2		2	XDV6X	UEAL4	24.49	195.75	36.35	18.40	6.86						
		Commingled 4-wire Local Loop Zone 3		3	XDV6X	UEAL4	33.40	195.75	36.35	18.40	6.86						
		Commingled 56kbps Local Loop Zone 1		1	XDD4X	UDL56	25.81	195.75	36.35	18.40	6.86						
		Commingled 56kbps Local Loop Zone 2		2	XDD4X	UDL56	31.54	195.75	36.35	18.40	6.86						
		Commingled 56kbps Local Loop Zone 3		3	XDD4X	UDL56	42.38	195.75	36.35	18.40	6.86						
		Commingled 64kbps Local Loop Zone 1		1	XDD4X	UDL64	25.81	195.75	36.35	18.40	6.86						
		Commingled 64kbps Local Loop Zone 2		2	XDD4X	UDL64	31.54	195.75	36.35	18.40	6.86						
		Commingled 64kbps Local Loop Zone 3		3	XDD4X	UDL64	42.38	195.75	36.35	18.40	6.86						
		Commingled ISDN Local Loop Zone 1		1	XDD4X	U1L2X	21.89	195.75	36.35	18.40	6.86						
		Commingled ISDN Local Loop Zone 2		2	XDD4X	U1L2X	25.27	195.75	36.35	18.40	6.86						
		Commingled ISDN Local Loop Zone 3		3	XDD4X	U1L2X	40.17	195.75	36.35	18.40	6.86						
		Commingled DS1 COCI			XDH1X, NTCD1	UC1D1	7.50	27.30	2.90	16.85	1.04						
		Commingled DS1 Interoffice Channel			XDH1X	U1TF1	34.93	87.67	45.69	43.76	27.95						
		Commingled DS1 Interoffice Channel Mileage			XDH1X	1L5XX	0.1199										
		Commingled DS1/DS0 Channel System			XDH1X	MQ1	71.23	86.01	0.00	0.00	0.00						
		Commingled DS1 Local Loop Zone 1		1	XDH1X	USLXX	49.41	209.25	70.37	37.87	6.86						
		Commingled DS1 Local Loop Zone 2		2	XDH1X	USLXX	52.55	209.25	70.37	37.87	6.86						
		Commingled DS1 Local Loop Zone 3		3	XDH1X	USLXX	68.40	209.25	70.37	37.87	6.86						
		Commingled DS3 Local Loop			HFQC6	UE3PX	258.44	1,751.51	131.77	112.80	75.81						
		Commingled DS3/STS-1 Local Loop Mileage			HFQC6, HFRST	1L5ND	11.40										
		Commingled STS-1 Local Loop			HFRST	UDLS1	311.51	1,751.51	131.77	112.80	75.81						
		Commingled DS3/DS1 Channel System			HFQC6	MQ3	124.39	0.00	0.00	0.00	0.00						
		Commingled DS3 Interoffice Channel			HFQC6	U1TF3	349.42	325.59	76.99	49.51	32.85						
		Commingled DS3 Interoffice Channel Mileage			HFQC6	1L5XX	2.63										
		Commingled STS-1Interoffice Channel			HFRST	U1TFS	366.43	325.59	76.99	49.51	32.85						
		Commingled STS-1Interoffice Channel Mileage			HFRST	1L5XX	2.63										
		Commingled Dark Fiber - Interoffice Transport, Per Four Fiber Strands, Per Route Mile Or Fraction Thereof			HEQDL	1L5DF	24.17										
		Commingled Dark Fiber - Interoffice Transport, Per Four Fiber Strands, Per Route Mile Or Fraction Thereof			HEQDL	UDF14		1,774.79	89.66	73.57	18.69						
SIGNALING (CCS7)																	
	NOTE:"bk" beside a rate indicates that the parties have agreed to bill and keep for that element pursuant to the terms and conditions in Attachment 3.																
		CCS7 Signaling Usage, Per TCAP Message					0.0000536										
		CCS7 Signaling Usage, Per ISUP Message (same as E.3.3)					.0000134bk										
LNP Query Service																	
		LNP Charge Per query					0.0008227										
		LNP Service Establishment Manual						12.47		11.07							
		LNP Service Provisioning with Point Code Establishment						574.30	293.39	251.23	184.73						
	*** NOTE: Switch-as-is rates are only applicable if agreement is TRO/TRRO Compliant**																

COLLOCATION - Georgia														Attachment: 4 Exh B			
CATEGORY		RATE ELEMENTS	Interim	Zone	BCS	USOC	RATES($)					Svc Order Submitted Elec per LSR	Svc Order Submitted Manually per LSR	Incremental Charge - Manual Svc Order vs. Electronic-1st	Incremental Charge - Manual Svc Order vs. Electronic-Add'l	Incremental Charge - Manual Svc Order vs. Electronic-Disc 1st	Incremental Charge - Manual Svc Order vs. Electronic-Disc Add'l
								Nonrecurring		Nonrecurring Disconnect		OSS Rates($)					
							Rec	First	Add'l	First	Add'l	SOMEC	SOMAN	SOMAN	SOMAN	SOMAN	SOMAN
PHYSICAL COLLOCATION																	
	Application																
		Physical Collocation - Initial Application Fee			CLO	PE1BA		1,284.72		0.59							
		Physical Collocation - Subsequent Application Fee			CLO	PE1CA		1,084.41		0.59							
	Space Preparation																
		Physical Collocation - Floor Space, per sq feet			CLO	PE1PJ	4.71										
		Physical Collocation - Space enclosure, welded wire, first 100 square feet			CLO	PE1BW	167.00										
		Physical Collocation - Space enclosure, welded wire, each additional 50 square feet			CLO	PE1CW	16.38										
		Physical Collocation - Space Preparation - C.O. Modification per square ft.			CLO	PE1SK	2.10										
		Physical Collocation - Space Preparation, Common Systems Modifications-Cageless, per square foot			CLO	PE1SL	2.27										
		Physical Collocation - Space Preparation - Common Systems Modifications-Caged, per cage			CLO	PE1SM	77.24										
		Physical Collocation - Space Preparation - Firm Order Processing			CLO	PE1SJ		140.96									
		Physical Collocation - Space Availability Report, per Central Office Requested			CLO	PE1SR		248.50									
	Power																
		Physical Collocation - Power, -48V DC Power - per Fused Amp Requested			CLO	PE1PL	4.84										
		Physical Collocation - Power, 120V AC Power, Single Phase, per Breaker Amp			CLO	PE1FB	5.16										
		Physical Collocation - Power, 240V AC Power, Single Phase, per Breaker Amp			CLO	PE1FD	10.34										
		Physical Collocation - Power, 120V AC Power, Three Phase, per Breaker Amp			CLO	PE1FE	15.50										
		Physical Collocation - Power, 277V AC Power, Three Phase, per Breaker Amp			CLO	PE1FG	35.79										
	Cross Connects (Cross Connects, Co-Carrier Cross Connects, and Ports)																
		Physical Collocation - 2-wire cross-connect, loop, provisioning			UEANL,UEQ, UNCNX, UEA, UCL, UAL, UHL, UDN, UNCVX	PE1P2	0.0202										
		Physical Collocation - 4-wire cross-connect, loop, provisioning			UEA, UHL, UNCVX, UNCDX, UCL, UDL	PE1P4	0.0403										
		Physical Collocation -DS1 Cross-Connect for Physical Collocation, provisioning			WDS1L, WDS1S, UXTD1, ULDD1, USLEL, UNLD1, U1TD1, UNC1X, UEPSR, UEPSB, UEPSE, UEPSP, USL, UEPEX, UEPDX	PE1P1	0.3807										
		Physical Collocation - DS3 Cross-Connect, provisioning			UE3, U1TD3, UXTD3, UXTS1, UNC3X, UNCSX, ULDD3, U1TS1, ULDS1, UNLD3, UEPEX, UEPDX, UEPSR, UEPSB, UEPSE, UEPSP	PE1P3	4.15										

COLLOCATION - Georgia														Attachment: 4 Exh B			
CATEGORY		RATE ELEMENTS	Interim	Zone	BCS	USOC	RATES($)					Svc Order Submitted Elec per LSR	Svc Order Submitted Manually per LSR	Incremental Charge - Manual Svc Order vs. Electronic-1st	Incremental Charge - Manual Svc Order vs. Electronic-Add'l	Incremental Charge - Manual Svc Order vs. Electronic-Disc 1st	Incremental Charge - Manual Svc Order vs. Electronic-Disc Add'l
								Nonrecurring		Nonrecurring Disconnect		OSS Rates($)					
							Rec	First	Add'l	First	Add'l	SOMEC	SOMAN	SOMAN	SOMAN	SOMAN	SOMAN
		Physical Collocation - 2-Fiber Cross-Connect			CLO, ULDO3, ULD12, ULD48, U1TO3, U1T12, U1T48, UDLO3, UDL12, UDF	PE1F2	1.76										
		Physical Collocation - 4-Fiber Cross-Connect			ULDO3, ULD12, ULD48, U1TO3, U1T12, U1T48, UDLO3, UDL12, UDF, UDFCX	PE1F4	3.38										
		Physical Collocation 2-Wire Cross Connect, Port			UEPSR, UEPSP, UEPSE, UEPSB, UEPSX, UEP2C	PE1R2	0.0202										
		Physical Collocation 4-Wire Cross Connect, Port			UEPEX, UEPDD	PE1R4	0.0403										
	Security																
		Physical Collocation - Security Escort for Basic Time - normally scheduled work, per half hour			CLO	PE1BT		16.51	10.82								
		Physical Collocation - Security Escort for Overtime - outside of normally scheduled working hours on a scheduled work day, per half hour			CLO	PE1OT		21.90	14.17								
		Physical Collocation - Security Escort for Premium Time - outside of scheduled work day, per half hour			CLO	PE1PT		27.29	17.53								
		Physical Collocation - Security Access System - Security System per Central Office, per Sq. Ft.			CLO	PE1AY	0.011										
		Physical Collocation -Security Access System - New Card Activation, per Card Activation (First), per State			CLO	PE1A1		21.98									
		Physical Collocation-Security Access System-Administrative Change, existing Access Card, per Request, per State, per Card			CLO	PE1AA		5.37									
		Physical Collocation - Security Access System - Replace Lost or Stolen Card, per Card			CLO	PE1AR		16.99									
		Physical Collocation - Security Access - Initial Key, per Key			CLO	PE1AK		13.19									
		Physical Collocation - Security Access - Key, Replace Lost or Stolen Key, per Key			CLO	PE1AL		13.19									
	Cable Records - Note: The rates in the First & Additional columns will actually be billed as "Initial I" and "Subsequent S" respectively																
		Physical Collocation - Cable Records, per request			CLO	PE1CR		I 742.92	S 477.59	125.63							
		Physical Collocation, Cable Records, VG/DS0 Cable, per cable record (maximum 3600 records)			CLO	PE1CD		317.29		177.60							
		Physical Collocation, Cable Records, VG/DS0 Cable, per each 100 pair			CLO	PE1CO		4.47		5.29							
		Physical Collocation, Cable Records, DS1, per T1 TIE			CLO	PE1C1		2.22		2.62							
		Physical Collocation, Cable Records, DS3, per T3 TIE			CLO	PE1C3		7.76		9.18							
		Physical Collocation - Cable Records, Fiber Cable, per cable record (maximum 99 records)			CLO	PE1CB		83.37		73.49							
		Physical Collocation, Cable Records,CAT5/RJ45			CLO	PE1C5		2.22		2.62							
	Entrance Cable																
		Physical Collocation - Fiber Cable Installation, Pricing, non-recurring charge, per Entrance Cable			CLO	PE1BD		736.20		21.49							
		Physical Collocation - Fiber Cable Support Structure, per Entrance Cable			CLO	PE1PM	7.37										
		Physical Collocation, Entrance Cable Support Structure, Copper, per each 100 pairs or fraction thereof (CO Manhole to Collocation Space)			CLO	PE1EE	0.2686										
		Physical Collocation, Entrance Cable Installation, Copper, per Cable (CO Manhole to Collocation Space)			CLO	PE1EF		754.41		21.49							
		Physical Collocation, Entrance Cable Installation, Copper, per each 100 pairs or fraction thereof (CO Manhole to Collocation Space)			CLO	PE1EG		9.11									
VIRTUAL COLLOCATION																	

COLLOCATION - Georgia														Attachment: 4 Exh B			
CATEGORY		RATE ELEMENTS	Interim	Zone	BCS	USOC	RATES($)					Svc Order Submitted Elec per LSR	Svc Order Submitted Manually per LSR	Incremental Charge - Manual Svc Order vs. Electronic-1st	Incremental Charge - Manual Svc Order vs. Electronic-Add'l	Incremental Charge - Manual Svc Order vs. Electronic-Disc 1st	Incremental Charge - Manual Svc Order vs. Electronic-Disc Add'l
								Nonrecurring		Nonrecurring Disconnect		OSS Rates($)					
							Rec	First	Add'l	First	Add'l	SOMEC	SOMAN	SOMAN	SOMAN	SOMAN	SOMAN
	Application																
		Virtual Collocation - Application Fee			AMTFS	EAF		608.92		0.59							
	Space Preparation																
		Virtual Collocation - Floor Space, per sq. ft.			AMTFS	ESPVX	4.71										
	Power																
		Virtual Collocation - Power, per fused amp			AMTFS	ESPAX	4.84										
	Cross Connects (Cross Connects, Co-Carrier Cross Connects, and Ports)																
		Virtual Collocation - 2-wire cross-connect, loop, provisioning			UEANL, UEA, UDN, UAL, UHL, UCL, UEQ, UNCVX, UNCDX, UNCNX	UEAC2	0.0192										
		Virtual Collocation - 4-wire cross-connect, loop, provisioning			UEA, UHL, UCL, UDL, UNCVX, UNCDX	UEAC4	0.0385										
		Virtual collocation - Special Access & UNE, cross-connect per DS1			ULR, UXTD1, UNC1X, ULDD1, U1TD1, USLEL, UNLD1, USL, UEPEX, UEPDX	CNC1X	0.3807										
		Virtual collocation - Special Access & UNE, cross-connect per DS3			USL, UE3, U1TD3, UXTS1, UXTD3, UNC3X, UNCSX, ULDD3, U1TS1, ULDS1, UDLSX, UNLD3	CND3X	4.15										
		Virtual Collocation - 2-Fiber Cross Connects			UDL12, UDLO3, U1T48, U1T12, U1TO3, ULDO3, ULD12, ULD48, UDF	CNC2F	1.76										
		Virtual Collocation - 4-Fiber Cross Connects			UDL12, UDLO3, U1T48, U1T12, U1TO3, ULDO3, ULD12, ULD48, UDF	CNC4F	3.53										
		Virtual Collocation 2-Wire Cross Connect, Port			UEPSX, UEPSB, UEPSE, UEPSP, UEPSR, UEP2C	VE1R2	0.0192										
		Virtual Collocation 4-Wire Cross Connect, Port			UEPDD, UEPEX	VE1R4	0.0385										
	Cable Records - Note: The rates in the First & Additional columns will actually be billed as "Initial I" & "Subsequent S" respectively																
		Virtual Collocation Cable Records - per request			AMTFS	VE1BA		742.92	477.59	125.63							
		Virtual Collocation Cable Records - VG/DS0 Cable, per cable record			AMTFS	VE1BB		317.29		177.60							
		Virtual Collocation Cable Records - VG/DS0 Cable, per each 100 pair			AMTFS	VE1BC		4.47		5.29							
		Virtual Collocation Cable Records - DS1, per T1TIE			AMTFS	VE1BD		2.22		2.62							
		Virtual Collocation Cable Records - DS3, per T3TIE			AMTFS	VE1BE		7.76		9.18							
		Virtual Collocation Cable Records - Fiber Cable, per 99 fiber records			AMTFS	VE1BF		83.37		73.49							
		Virtual Collocation Cable Records - CAT 5/RJ45			AMTFS	VE1B5		2.22		2.62							
	Security																
		Virtual collocation - Security escort, basic time, normally scheduled work hours			AMTFS	SPTBX		16.51	10.82								
		Virtual collocation - Security escort, overtime, outside of normally scheduled work hours on a normal working day			AMTFS	SPTOX		21.90	14.17								
		Virtual collocation - Security escort, premium time, outside of a scheduled work day			AMTFS	SPTPX		27.29	17.53								
	Maintenance																
		Virtual collocation - Maintenance in CO - Basic, per half hour			AMTFS	CTRLX		26.52	10.82								

COLLOCATION - Georgia														Attachment: 4 Exh B			
CATEGORY		RATE ELEMENTS	Interim	Zone	BCS	USOC	RATES($)					Svc Order Submitted Elec per LSR	Svc Order Submitted Manually per LSR	Incremental Charge - Manual Svc Order vs. Electronic-1st	Incremental Charge - Manual Svc Order vs. Electronic-Add'l	Incremental Charge - Manual Svc Order vs. Electronic-Disc 1st	Incremental Charge - Manual Svc Order vs. Electronic-Disc Add'l
								Nonrecurring		Nonrecurring Disconnect		OSS Rates($)					
							Rec	First	Add'l	First	Add'l	SOMEC	SOMAN	SOMAN	SOMAN	SOMAN	SOMAN
		Virtual collocation - Maintenance in CO - Overtime, per half hour			AMTFS	SPTOM		35.41	14.17								
		Virtual collocation - Maintenance in CO - Premium per half hour			AMTFS	SPTPM		44.30	17.53								
	Entrance Cable																
		Virtual Collocation - Cable Installation Charge, per cable			AMTFS	ESPCX		736.20		21.49							
		Virtual Collocation - Cable Support Structure, per cable			AMTFS	ESPSX	7.74										
		Virtual Collocation, Entrance Cable Support Structure, Copper, per each 100 pairs or fraction thereof (CO Manhole to Frame)			AMTFS	VE1EE	0.235										
		Virtual Collocation, Entrance Cable Installation, Copper, per Cable (CO Manhole to Frame)			AMTFS	VE1EF		754.41		21.49							
		Virtual Collocation, Entrance Cable Installation, Copper, per each 100 pairs or fraction thereof (CO Manhole to Frame)			AMTFS	VE1EG		9.11									
COLLOCATION IN THE REMOTE SITE																	
	Physical Remote Site Collocation																
		Physical Collocation in the Remote Site - Application Fee			CLORS	PE1RA		300.31		132.49							
		Cabinet Space in the Remote Site per Bay/ Rack			CLORS	PE1RB	148.11										
		Physical Collocation in the Remote Site - Security Access - Key			CLORS	PE1RD		13.19									
		Physical Collocation in the Remote Site - Space Availability Report per Premises Requested			CLORS	PE1SR		109.83									
		Physical Collocation in the Remote Site - Remote Site CLLI Code Request, per CLLI Code Requested			CLORS	PE1RE		36.00									
		Remote Site DLEC Data (BRSDD), per Compact Disk, per CO			CLORS	PE1RR		116.71									
		Physical Collocation - Security Escort for Basic Time - normally scheduled work, per half hour			CLORS	PE1BT		16.51	10.82								
		Physical Collocation - Security Escort for Overtime - outside of normally scheduled working hours on a scheduled work day, per half hour			CLORS	PE1OT		21.90	14.17								
		Physical Collocation - Security Escort for Premium Time - outside of scheduled work day, per half hour			CLORS	PE1PT		27.29	17.53								
	Virtual Remote Site Collocation																
		Virtual Collocation in the Remote Site - Application Fee			VE1RS	VE1RB		300.31		132.49							
		Virtual Collocation in the Remote Site - Per Bay/Rack of Space			VE1RS	VE1RC	148.11										
		Virtual Collocation in the Remote Site - Space Availability Report per Premises requested			VE1RS	VE1RR		109.83									
		Virtual Collocation in the Remote Site - Remote Site CLLI Code Request, per CLLI Code Requested			VE1RS	VE1RL		36.00									
ADJACENT COLLOCATION																	
		Adjacent Collocation - Space Charge per Sq. Ft.			CLOAC	PE1JA	0.1725										
		Adjacent Collocation - Electrical Facility Charge per Linear Ft.			CLOAC	PE1JC	4.12										
		Adjacent Collocation - 2-Wire Cross-Connects			UEANL,UEQ,UEA,UCL, UAL, UHL, UDN	PE1JE	0.0176										
		Adjacent Collocation - 4-Wire Cross-Connects			UEA,UHL,UDL,UCL	PE1JF	0.0353										
		Adjacent Collocation - DS1 Cross-Connects			USL	PE1JG	0.3686										
		Adjacent Collocation - DS3 Cross-Connects			UE3	PE1JH	4.83										
		Adjacent Collocation - 2-Fiber Cross-Connect			CLOAC	PE1JJ	1.69										
		Adjacent Collocation - 4-Fiber Cross-Connect			CLOAC	PE1JK	3.31										
		Adjacent Collocation - Application Fee			CLOAC	PE1JB		1,380.83		0.50							
		Adjacent Collocation - 120V, Single Phase Standby Power Rate per AC Breaker Amp			CLOAC	PE1JL	5.16										
		Adjacent Collocation - 240V, Single Phase Standby Power Rate per AC Breaker Amp			CLOAC	PE1JM	10.34										
		Adjacent Collocation - 120V, Three Phase Standby Power Rate per AC Breaker Amp			CLOAC	PE1JN	15.50										

COLLOCATION - Georgia														Attachment: 4 Exh B			
CATEGORY		RATE ELEMENTS	Interim	Zone	BCS	USOC	RATES($)					Svc Order Submitted Elec per LSR	Svc Order Submitted Manually per LSR	Incremental Charge - Manual Svc Order vs. Electronic-1st	Incremental Charge - Manual Svc Order vs. Electronic-Add'l	Incremental Charge - Manual Svc Order vs. Electronic-Disc 1st	Incremental Charge - Manual Svc Order vs. Electronic-Disc Add'l
								Nonrecurring		Nonrecurring Disconnect		OSS Rates($)					
							Rec	First	Add'l	First	Add'l	SOMEC	SOMAN	SOMAN	SOMAN	SOMAN	SOMAN
		Adjacent Collocation - 277V, Three Phase Standby Power Rate per AC Breaker Amp			CLOAC	PE1JO	35.79										

Amendment to the Agreement
Between
DPI-Teleconnect, LLC
and
BellSouth Telecommunications, Inc.
Dated 4/19/2003

Pursuant to this Amendment, (the "Amendment"), DPI-Teleconnect, LLC (DPI-Teleconnect), and BellSouth Telecommunications, Inc. (BellSouth), hereinafter referred to collectively as the "Parties", hereby agree to amend that certain Interconnection Agreement between the Parties dated 4/19/2003 (Agreement).

WHEREAS, BellSouth and DPI-Teleconnect have entered into good faith negotiations pursuant to the Act to renegotiate an interconnection agreement (New Agreement) to replace the existing Agreement between the Parties, which expired on 4/18/2006; and

WHEREAS, the Parties desire to extend the term of the Agreement; and

WHEREAS, on March 10, 2006, the Public Service Commission of South Carolina (Commission) issued Order No. 2006-136 in Docket No. 2004-316-C (Order), Proceeding to Consider Amendments to Interconnection Agreements Between BellSouth Telecommunications, Inc. and Competitive Local Exchange Carriers Due to Changes of Law; and

WHEREAS, the Parties are obligated to amend the Agreement to bring it in compliance with the Commission's Order;

NOW, THEREFORE, in consideration of the mutual provisions contained herein and other good and valuable consideration, the receipt and sufficiency of which are hereby acknowledged, the Parties hereby covenant and agree as follows:

1. The Parties hereby agree to extend the term of the Agreement by ninety (90) days following the date of the last signature of this Amendment. Other than the modification of the expiration date as described in this Amendment, all provisions in Section 2 of the General Terms and Conditions of the Agreement relating to the term and termination of the Agreement remain in full force and effect.
2. The Parties hereby agree to incorporate into the Agreement the contract provisions set forth in Exhibit A hereto, and such contract provisions shall apply to services provided in the State of South Carolina only.
3. The Parties hereby agree to incorporate into the Agreement the rates set forth in Exhibit B hereto, and such rates shall apply to services provided in the State of South Carolina only.
3. To the extent that such contract provisions or rates as set forth in Exhibits A and B hereto conflict with any other rates, terms and conditions in the Agreement, the contract provisions and rates in Exhibits A and B shall prevail in the State of South Carolina.

4. Further, to the extent that defined terms in this Amendment differ from defined terms in the Agreement, such defined terms in the Agreement shall be deemed to have the same meaning as the alternative defined terms in this Amendment to the extent necessary to give full effect to this Amendment consistent with the Public Service Commission of South Carolina's Order.

5. Network elements de-listed under Section 251(c)(3) should be removed from BellSouth's SQM/PMAP/SEEM plans.

6. This Amendment shall be deemed effective on March 11, 2006 (Effective Date).

7. All of the other provisions of the Agreement shall remain in full force and effect.

8. Either or both of the Parties are authorized to submit this Amendment to the state regulatory authority for approval subject to Section 252(e) of the Federal Telecommunications Act of 1996.

IN WITNESS WHEREOF, the Parties have executed this Amendment the day and year written below.

BellSouth Telecommunications, Inc.	**DPI-Teleconnect, LLC**
By: Kristen E. Shore	By: David B. Dornant
Name: Kristen E. Shore	Name: DAVID B. DORNANT
Title: Director	Title: PRESIDENT + CEO
Date: 11/16/06	Date: 11/14/06

Version: SC COL Amendment
CLEC with CA and Amended IA
3/23/06

Attachment 2

Network Elements and Other Services

TABLE OF CONTENTS

1 Introduction.....3

2 Loops.....6

3 Line Splitting.....21

4 EEL Audits……...22

5 Dedicated Transport and Dark Fiber Transport 23

6 Automatic Location Identification/Data Management System 32

ACCESS TO NETWORK ELEMENTS AND OTHER SERVICES

1 Introduction

1.1 This Attachment sets forth rates, terms and conditions for unbundled network elements (Network Elements) and combinations of Network Elements (Combinations) that BellSouth offers to DPI-Teleconnect for DPI-Teleconnect's provision of Telecommunications Services in accordance with its obligations under Section 251(c)(3) of the Act. Additionally, this Attachment sets forth the rates, terms and conditions for other facilities and services BellSouth makes available to DPI-Teleconnect (Other Services). Additionally, the provision of a particular Network Element or Other Service may require DPI-Teleconnect to purchase other Network Elements or services. In the event of a conflict between this Attachment and any other section or provision of this Agreement, the provisions of this Attachment shall control.

1.2 DPI-Teleconnect shall not obtain a Network Element for the exclusive provision of mobile wireless services or interexchange services.

1.3 Conversion of Wholesale Services to Network Elements or Network Elements to Wholesale Services. Upon request, BellSouth shall convert a wholesale service, or group of wholesale services, to the equivalent Network Element or Combination that is available to DPI-Teleconnect pursuant to Section 251 of the Act and under this Agreement or convert a Network Element or Combination that is available to DPI-Teleconnect pursuant to Section 251 of the Act and under this Agreement to an equivalent wholesale service or group of wholesale services offered by BellSouth (collectively "Conversion"). BellSouth shall charge the applicable nonrecurring switch-as-is rates for Conversions to specific Network Elements or Combinations found in Exhibit B. BellSouth shall also charge the same nonrecurring switch-as-is rates when converting from Network Elements or Combinations. Any rate change resulting from the Conversion will be effective as of the next billing cycle following BellSouth's receipt of a complete and accurate Conversion request from DPI-Teleconnect. A Conversion shall be considered termination for purposes of any volume and/or term commitments and/or grandfathered status between DPI-Teleconnect and BellSouth. Any change from a wholesale service/group of wholesale services to a Network Element/Combination, or from a Network Element/Combination to a wholesale service/group of wholesale services, that requires a physical rearrangement will not be considered to be a Conversion for purposes of this Agreement. BellSouth will not require physical rearrangements if the Conversion can be completed through record changes only. Orders for Conversions will be handled in accordance with the guidelines set forth in the Ordering Guidelines and Processes and CLEC Information Packages as referenced in Sections 1.8.1 and 1.8.2 below.

1.4 Except to the extent expressly provided otherwise in this Attachment, DPI-Teleconnect may not maintain unbundled network elements or combinations of unbundled network elements, that are no longer offered pursuant to this Agreement (collectively "Arrangements"). In the event BellSouth determines that DPI-Teleconnect has in place any Arrangements after the Effective Date of this Agreement, BellSouth will provide DPI-Teleconnect with thirty (30) days written notice to disconnect or convert such Arrangements. If DPI-Teleconnect fails to submit orders to disconnect or convert such Arrangements within such thirty (30) day period, BellSouth will transition such circuits to the equivalent tariffed BellSouth service(s). Those circuits identified and transitioned by BellSouth pursuant to this Section 1.4 shall be subject to all applicable disconnect charges as set forth in this Agreement and the full nonrecurring charges for installation of the equivalent tariffed BellSouth service as set forth in BellSouth's tariffs. The applicable recurring tariff charge shall apply to each circuit as of the Effective Date of this Agreement.

1.5 Prior to submitting an order pursuant to this Agreement for high capacity (DS1 or above) Dedicated Transport or high capacity Loops, DPI-Teleconnect shall undertake a reasonably diligent inquiry to determine whether DPI-Teleconnect is entitled to unbundled access to such Network Elements in accordance with the terms of this Agreement. By submitting any such order, DPI-Teleconnect self-certifies that to the best of DPI-Teleconnect's knowledge, the high capacity Dedicated Transport or high capacity Loop requested is available as a Network Element pursuant to this Agreement. Upon receiving such order, BellSouth shall process the request in reliance upon DPI-Teleconnect's self-certification. To the extent BellSouth believes that such request does not comply with the terms of this Agreement, BellSouth shall seek dispute resolution in accordance with the General Terms and Conditions of this Agreement. In the event such dispute is resolved in BellSouth's favor, BellSouth shall bill DPI-Teleconnect the difference between the rates for such circuits pursuant to this Agreement and the applicable nonrecurring and recurring charges for the equivalent tariffed service from the date of installation to the date the circuit is transitioned to the equivalent tariffed service. Within thirty (30) days following a decision finding in BellSouth's favor, DPI-Teleconnect shall submit a spreadsheet identifying those non-compliant circuits to be transitioned to tariffed services or disconnected.

1.5.1 In the event that (1) BellSouth designates a wire center as non-impaired, (2) CLEC converts existing UNEs to other services or orders new services as services other than UNEs, (3) CLEC otherwise would have been entitled to UNEs in such wire center at the time alternative services were provisioned, and (4) BellSouth acknowledges or a state or federal regulatory body with authority determines that, at the time BellSouth designated such wire center as non-impaired, such wire center did not meet the FCC's non-impairment criteria, then upon request of CLEC, BellSouth shall transition to UNEs any alternative services in such wire center that were established after such wire center was designated as non-

impaired. In such instances, BellSouth shall refund CLEC the difference between the rate paid by CLEC for such services and the applicable UNE rate, including but not limited to any charges associated with the unnecessary conversion from UNE to other wholesale services.

1.6 BellSouth will perform Routine Network Modifications (RNM) in accordance with FCC 47 C.F.R. § 51.319 (a)(7) and (e)(4) for Loops and Dedicated Transport provided under this Attachment. If BellSouth has anticipated such RNM and performs them during normal operations and has recovered the costs for performing such modifications through the rates set forth in Exhibit A of Attachment 2 of the Agreement, then BellSouth shall perform such RNM at no additional charge. RNM shall be performed within the intervals established for the Network Element and subject to the performance measurements and associated remedies set forth in Attachment 9 of this Agreement to the extent such RNM were anticipated in the setting of such intervals. If BellSouth has not anticipated a requested network modification as being a RNM and has not recovered the costs of such RNM in the rates set forth in Exhibit A of Attachment 2 of the Agreement, then such request will be handled as a project on an individual case basis. BellSouth will provide a price quote for the request and, upon receipt of payment from DPI-Teleconnect, BellSouth shall perform the RNM.

1.7 <u>Commingling of Services</u>

1.7.1 Commingling means the connecting, attaching, or otherwise linking of a Network Element, or a Combination, to one or more Telecommunications Services or facilities that DPI-Teleconnect has obtained at wholesale from BellSouth, or the combining of a Network Element or Combination with one or more such wholesale Telecommunications Services or facilities. DPI-Teleconnect must comply with all rates, terms or conditions applicable to such wholesale Telecommunications Services or facilities.

1.7.2 Subject to the limitations set forth elsewhere in this Attachment, BellSouth shall not deny access to a Network Element or a Combination on the grounds that one or more of the elements: (1) is connected to, attached to, linked to, or combined with such a facility or service obtained from BellSouth; or (2) shares part of BellSouth's network with access services or inputs for mobile wireless services and/or interexchange services.

1.7.3 Unless otherwise agreed to by the Parties, the Network Element portion of a commingled circuit will be billed at the rates set forth in Exhibit B and the remainder of the circuit or service will be billed in accordance with BellSouth's tariffed rates or rates set forth in a separate agreement between the Parties.

1.7.4 When multiplexing equipment is attached to a commingled circuit, the multiplexing equipment will be billed from the same agreement or tariff as the higher bandwidth

circuit. Central Office Channel Interfaces (COCI) will be billed from the same agreement or tariff as the lower bandwidth circuit.

1.7.5 Notwithstanding any other provision of this Agreement, BellSouth shall not be obligated to commingle or combine Network Elements or Combinations with any service, network element or other offering that it is obligated to make available only pursuant to Section 271 of the Act.

1.7.6 Terms and conditions for order cancellation charges and Service Date Advancement Charges will apply in accordance with Attachment 6. The charges shall be as set forth in Exhibit A of Attachment 2 of the Agreement.

1.8 Ordering Guidelines and Processes

1.8.1 For information regarding Ordering Guidelines and Processes for various Network Elements, Combinations and Other Services, DPI-Teleconnect should refer to the "Guides" section of the BellSouth Interconnection Web site.

1.8.2 Additional information may also be found in the individual CLEC Information Packages located at the "CLEC UNE Products" on BellSouth's Interconnection Web site at: www.interconnection.bellsouth.com/guides/html/unes.html.

2 Loops

2.1 General. The local loop Network Element is defined as a transmission facility that BellSouth provides pursuant to this Attachment between a distribution frame (or its equivalent) in BellSouth's central office and the loop demarcation point at an End User premises (Loop). Facilities that do not terminate at a demarcation point at an End User premises, including, by way of example, but not limited to, facilities that terminate to another carrier's switch or premises, a cell site, Mobile Switching Center or base station, do not constitute local Loops under Section 251, except to the extent that CLEC may require Loops to such locations for the purpose of providing telecommunications services to its personnel at those locations. The Loop Network Element includes all features, functions, and capabilities of the transmission facilities, including the network interface device, and attached electronics (except those used for the provision of advanced services, such as Digital Subscriber Line Access Multiplexers (DSLAMs)), optronics and intermediate devices (including repeaters and load coils) used to establish the transmission path to the End User's premises, including inside wire owned or controlled by BellSouth. DPI-Teleconnect shall purchase the entire bandwidth of the Loop and, except as required herein or as otherwise agreed to by the Parties, BellSouth shall not subdivide the frequency of the Loop.

2.1.1 The Loop does not include any packet switched features, functions or capabilities.

2.1.2 Fiber to the Home (FTTH) loops are local loops consisting entirely of fiber optic cable, whether dark or lit, serving an End User's premises or, in the case of predominantly residential multiple dwelling units (MDUs), a fiber optic cable, whether dark or lit, that extends to the MDU minimum point of entry (MPOE). Fiber to the Curb (FTTC) loops are local loops consisting of fiber optic cable connecting to a copper distribution plant that is not more than five hundred (500) feet from the End User's premises or, in the case of predominantly residential MDUs, not more than five hundred (500) feet from the MDU's MPOE. The fiber optic cable in a FTTC loop must connect to a copper distribution plant at a serving area interface from which every other copper distribution subloop also is not more than five hundred (500) feet from the respective End User's premises.

2.1.2.1 In new build (Greenfield) areas, where BellSouth has only deployed FTTH/FTTC facilities, BellSouth is under no obligation to provide Loops. FTTH facilities include fiber loops deployed to the MPOE of a MDU that is predominantly residential regardless of the ownership of the inside wiring from the MPOE to each End User in the MDU. Notwithstanding the foregoing, in such Greenfield areas that are served from an impaired wire center, BellSouth shall make available UNE DS1 Loops as described in this Attachment.

2.1.2.2 In FTTH/FTTC overbuild situations where BellSouth also has copper Loops, BellSouth will make those copper Loops available to DPI-Teleconnect on an unbundled basis, until such time as BellSouth chooses to retire those copper Loops using the FCC's network disclosure requirements. In these cases, BellSouth will offer a sixty-four (64) kilobits per second (kbps) voice grade channel over its FTTH/FTTC facilities.

2.1.2.3 Furthermore, in FTTH/FTTC overbuild areas where BellSouth has not yet retired copper facilities, BellSouth is not obligated to ensure that such copper Loops in that area are capable of transmitting signals prior to receiving a request for access to such Loops by DPI-Teleconnect. If a request is received by BellSouth for a copper Loop, and the copper facilities have not yet been retired, BellSouth will restore the copper Loop to serviceable condition if technically feasible. In these instances of Loop orders in an FTTH/FTTC overbuild area, BellSouth's standard Loop provisioning interval will not apply, and the order will be handled on a project basis by which the Parties will negotiate the applicable provisioning interval.

2.1.3 A hybrid Loop is a local Loop, composed of both fiber optic cable, usually in the feeder plant, and copper twisted wire or cable, usually in the distribution plant. BellSouth shall provide DPI-Teleconnect with nondiscriminatory access to the time division multiplexing features, functions and capabilities of such hybrid Loop, on an unbundled basis to establish a complete transmission path between BellSouth's central office and an End User's premises. Notwithstanding the foregoing, in an impaired wire center, BellSouth shall make available hybrid Loops as described in this Attachment.

2.1.4 Transition for DS1 and DS3 Loops

2.1.4.1 For purposes of this Section 2, the Transition Period for the Embedded Base of DS1 and DS3 Loops and for the Excess DS1 and DS3 Loops (defined in 2.1.4.3) is the twelve (12) month period beginning March 11, 2005 and ending March 10, 2006.

2.1.4.2 For purposes of this Section 2, Embedded Base means DS1 and DS3 Loops that were in service for DPI-Teleconnect as of March 10, 2005 in those wire centers that, as of such date, met the criteria set forth in Sections 2.1.4.5.1 or 2.1.4.5.2 below. For the state of South Carolina, during the Transition Period DPI-Teleconnect shall be entitled to order and BellSouth shall provision moves, changes and additions of and to DS1 and DS3 Loops that DPI-Teleconnect orders for the purpose of serving CLEC's existing DS1 and DS3 End Users as of March 10, 2005, at such End Users' new or existing physical locations, and such facilities shall be included in the Embedded Base. Subsequent disconnects or loss of End Users shall be removed from the Embedded Base.

2.1.4.3 Excess DS1 and DS3 Loops are those DPI-Teleconnect DS1 and DS3 Loops in service as of March 10, 2005, in excess of the caps set forth in Sections 2.2.6.2 and 2.2.12 below, respectively. Subsequent disconnects or loss of End Users shall be removed from Excess DS1 and DS3 Loops.

2.1.4.4 For purposes of this Section 2, a Business Line is defined in 47 C.F.R. § 51.5.

2.1.4.5 Notwithstanding anything to the contrary in this Agreement, and except as set forth in Section 2.1.4.12 below, BellSouth shall make available DS1 and DS3 Loops as described in this Section 2.1.4 only for DPI-Teleconnect's Embedded Base and Excess DS1 and DS3 loops during the Transition Period:

2.1.4.5.1 DS1 Loops at any location within the service area of a wire center containing 60,000 or more Business Lines and four (4) or more fiber-based collocators.

2.1.4.5.2 DS3 Loops at any location within the service area of a wire center containing 38,000 or more Business Lines and four (4) or more fiber-based collocators.

2.1.4.6 A list of wire centers meeting the criteria set forth in Sections 2.1.4.5.1 and 2.1.4.5.2 above as of March 10, 2005 (Initial Wire Center List) as ordered by the Public Service Commission of South Carolina in Docket No. 2004-316-C (Initial Wire Center List), is attached to BellSouth's Carrier Notification Letter SN91086058, dated March 20, 2006, which is available on BellSouth's Interconnection Services Web site.

2.1.4.7 Notwithstanding the Effective Date of this Agreement, during the Transition Period, the rates for DPI-Teleconnect's Embedded Base of DS1 and DS3 Loops and DPI-Teleconnect's Excess DS1 and DS3 Loops described in this Section 2.1.4

shall be equal to the higher of 115% of the rate paid for that element on June 15, 2004 or 115% of a new rate the Commission establishes, if any, between June 16, 2004 and March 11, 2005. These rates shall be as set forth in Exhibit A to Attachment 2 of the Agreement and this Section 2.1.4.7.

2.1.4.8 The Transition Period shall apply only to (1) DPI-Teleconnect's Embedded Base and (2) DPI-Teleconnect's Excess DS1 and DS3 Loops. DPI-Teleconnect shall not add new DS1 or DS3 loops as described in this Section 2.1.4 pursuant to this Agreement, except pursuant to the self-certification process as set forth in Section 1.8 of this Attachment and as set forth in Section 2.1.4.12 below.

2.1.4.9 Once a wire center exceeds both of the thresholds set forth in Section 2.1.4.5.1 above, no future DS1 Loop unbundling will be required in that wire center.

2.1.4.10 Once a wire center exceeds both of the thresholds set forth in Section 2.1.4.5.2 above, no future DS3 Loop unbundling will be required in that wire center.

2.1.4.11 No later than December 9, 2005 DPI-Teleconnect shall submit spreadsheet(s) identifying all of the Embedded Base of circuits and Excess DS1 and DS3 Loops to be either disconnected or converted to other BellSouth services pursuant to Section 1.3 above. The Parties shall negotiate a project schedule for the Conversion of the Embedded Base and Excess DS1 and DS3 Loops.

2.1.4.11.1 If DPI-Teleconnect fails to submit the spreadsheet(s) specified in Section 2.1.4.11 above for all of its Embedded Base and Excess DS1 and DS3 Loops prior to December 9, 2005, BellSouth will identify DPI-Teleconnect's remaining Embedded Base and Excess DS1 and DS3 Loops, if any, and will transition such circuits to the equivalent tariffed BellSouth service(s). Those circuits identified and transitioned by BellSouth pursuant to this Section 2.1.4.11.1 shall be subject to all applicable disconnect charges as set forth in this Agreement and the full nonrecurring charges for installation of the equivalent tariffed BellSouth service as set forth in BellSouth's tariffs.

2.1.4.11.2 For Embedded Base circuits and Excess DS1 and DS3 Loops converted pursuant to Section 2.1.4.11 above or transitioned pursuant to Section 2.1.4.11.1 above, the applicable recurring tariff charge shall apply to each circuit as of the earlier of the date each circuit is converted or transitioned, as applicable, or March 11, 2006.

2.1.4.12 <u>Modifications and Updates to the Wire Center List and Subsequent Transition Periods</u>

2.1.4.12.1 In the event BellSouth identifies additional wire centers that meet the criteria set forth in Section 2.1.4.5 above, but that were not included in the Initial Wire Center List, BellSouth shall include such additional wire centers in a carrier notification letter (CNL). Each such list of additional wire centers shall be considered a "Subsequent Wire Center List".

2.1.4.12.2 Effective ten (10) business days after the date of a BellSouth CNL providing a Subsequent Wire Center List, BellSouth shall not be required to unbundle DS1 and/or DS3 Loops, as applicable, in such additional wire center(s), except pursuant to the self-certification process as set forth in Section 1.5 of this Attachment.

2.1.4.12.3 For purposes of Section 2.1.4.12 above, BellSouth shall make available DS1 and DS3 Loops that were in service for DPI-Teleconnect in a wire center on the Subsequent Wire Center List as of the tenth (10th) business day after the date of BellSouth's CNL identifying the Subsequent Wire Center List (Subsequent Embedded Base) until ninety (90) days after the tenth (10th) business day from the date of BellSouth's CNL identifying the Subsequent Wire Center List (Subsequent Transition Period).

2.1.4.12.4 Subsequent disconnects or loss of End Users shall be removed from the Subsequent Embedded Base.

2.1.4.12.5 The rates set forth in Exhibit A of Attachment 2 of the Agreement plus 15% shall apply to the Subsequent Embedded Base during the Subsequent Transition Period.

2.1.4.12.6 No later than forty (40) days from BellSouth's CNL identifying the Subsequent Wire Center List, DPI-Teleconnect shall submit a spreadsheet(s) identifying the Subsequent Embedded Base of circuits to be disconnected or converted to other BellSouth services. The Parties shall negotiate a project schedule for the Conversion of the Subsequent Embedded Base.

2.1.4.12.6.1 If DPI-Teleconnect fails to submit the spreadsheet(s) specified in Section 2.1.4.12.6 above for all of its Subsequent Embedded Base within forty (40) days after the date of BellSouth's CNL identifying the Subsequent Wire Center List, BellSouth will identify DPI-Teleconnect's remaining Subsequent Embedded Base, if any, and will transition such circuits to the equivalent tariffed BellSouth service(s). Those circuits identified and transitioned by BellSouth shall be subject to the applicable disconnect charges as set forth in this Agreement and the full nonrecurring charges for installation of the equivalent tariffed BellSouth service as set forth in BellSouth's tariffs.

2.1.4.12.6.2 For Subsequent Embedded Base circuits converted pursuant to Section 2.1.4.12.6 above or transitioned pursuant to Section 2.1.4.12.6.1 above, the applicable recurring tariff charges shall apply as of the earlier of the date each circuit is converted or transitioned, as applicable, or the first day after the end of the Subsequent Transition Period.

2.2 Unbundled Digital Loops

2.2.1 BellSouth will offer UDLs. UDLs are service specific, will be designed, will be provisioned with test points (where appropriate), and will come standard with OC

and a DLR. The various UDLs are intended to support a specific digital transmission scheme or service.

2.2.2 BellSouth shall make available the following UDLs, subject to restrictions set forth herein:

2.2.2.1 2-wire Unbundled ISDN Digital Loop;

2.2.2.2 2-wire Unbundled ADSL Compatible Loop;

2.2.2.3 2-wire Unbundled HDSL Compatible Loop;

2.2.2.4 4-wire Unbundled HDSL Compatible Loop;

2.2.2.5 4-wire Unbundled DS1 Digital Loop;

2.2.2.6 4-wire Unbundled Digital Loop/DS0 – 64 kbps, 56 kbps and below;

2.2.2.7 DS3 Loop; or

2.2.2.8 STS-1 Loop.

2.2.3 2-wire Unbundled ISDN Digital Loops. These will be provisioned according to industry standards for 2-Wire Basic Rate ISDN services and will come standard with a test point, OC, and a DLR. DPI-Teleconnect will be responsible for providing BellSouth with a Service Profile Identifier (SPID) associated with a particular ISDN-capable Loop and End User. With the SPID, BellSouth will be able to adequately test the circuit and ensure that it properly supports ISDN service.

2.2.4 2-wire ADSL-Compatible Loop. This is a designed Loop that is provisioned according to Revised Resistance Design (RRD) criteria and may be up to 18,000 feet long and may have up to 6,000 feet of bridged tap (inclusive of Loop length). The Loop is a 2-wire circuit and will come standard with a test point, OC, and a DLR.

2.2.5 2-wire or 4-wire HDSL-Compatible Loop. This is a designed Loop that meets Carrier Serving Area (CSA) specifications, may be up to 12,000 feet long and may have up to 2,500 feet of bridged tap (inclusive of Loop length). It may be a 2-wire or 4-wire circuit and will come standard with a test point, OC, and a DLR.

2.2.6 4-wire Unbundled DS1 Digital Loop.

2.2.6.1 This is a designed 4-wire Loop that is provisioned according to industry standards for DS1 or Primary Rate ISDN services and will come standard with a test point, OC, and a DLR. A DS1 Loop may be provisioned over a variety of loop transmission technologies including copper, HDSL-based technology or fiber optic

transport systems. It will include a 4-wire DS1 Network Interface at the End User's location. For purposes of this Agreement, including the transition of DS1 and DS3 Loops described in Section 2.1.4 above, DS1 Loops include 2-wire and 4-wire copper Loops capable of providing high-bit rate digital subscriber line services, such as 2-wire and 4-wire HDSL Compatible Loops.

2.2.6.2 BellSouth shall not provide more than ten (10) unbundled DS1 Loops to DPI-Teleconnect at any single building in which DS1 Loops are available as unbundled Loops.

2.2.7 4-wire Unbundled Digital/DS0 Loop. These are designed 4-wire Loops that may be configured as sixty-four (64)kbps, fifty-six (56)kbps, nineteen (19)kbps, and other sub-rate speeds associated with digital data services and will come standard with a test point, OC, and a DLR.

2.2.8 DS3 Loop. DS3 Loop is a two-point digital transmission path which provides for simultaneous two-way transmission of serial, bipolar, return-to-zero isochronous digital electrical signals at a transmission rate of forty-four point seven thirty-six (44.736) megabits per second (Mbps) that is dedicated to the use of the ordering CLEC in its provisioning of local exchange and associated exchange access services. It may provide transport for twenty-eight (28) DS1 channels, each of which provides the digital equivalent of twenty-four (24) analog voice grade channels. The interface to unbundled dedicated DS3 transport is a metallic-based electrical interface.

2.2.9 STS-1 Loop. STS-1 Loop is a high-capacity digital transmission path with SONET VT1.5 mapping that is dedicated for the use of the ordering customer for the purpose of provisioning local exchange and associated exchange access services. It is a two-point digital transmission path which provides for simultaneous two-way transmission of serial bipolar return-to-zero synchronous digital electrical signals at a transmission rate of fifty-one point eighty-four (51.84) Mbps. It may provide transport for twenty-eight (28) DS1 channels, each of which provides the digital equivalent of twenty-four (24) analog voice grade channels. The interface to unbundled dedicated STS-1 transport is a metallic-based electrical interface.

2.2.10 Both DS3 Loop and STS-1 Loop require a SI in order to ascertain availability.

2.2.11 DS3 services come with a test point and a DLR. Mileage is airline miles, rounded up and a minimum of one (1) mile applies. BellSouth's TR73501 LightGate®Service Interface and Performance Specifications, Issue D, June 1995 applies to DS3 services.

2.2.12 DPI-Teleconnect may obtain a maximum of a single Unbundled DS3 Loop to any single building in which DS3 Loops are available as Unbundled Loops.

2.2.13 Fiber based Collocator

2.2.13.1 For purposes of this Amendment a "Fiber-Based Collocator" is, as defined in 47 C.F.R. § 51.5, any carrier, unaffiliated with BellSouth, that maintains a collocation arrangement in a BellSouth wire center, with active electrical power supply, and operates a fiber-optic cable or comparable transmission facility that (1) terminates at a collocation arrangement within the wire center; (2) leaves the BellSouth wire center premises; and (3) is owned by a party other than BellSouth or any affiliate of BellSouth.

2.2.13.2 For purposes of this definition: (i) carriers that have entered into merger and/or other consolidation agreements, or otherwise announced their intention to enter into the same, will be treated as affiliates and therefore as one collocator; provided however, in the case one of the parties to such merger or consolidation arrangement is BellSouth, then the other party's collocation arrangement shall not be counted as a Fiber-Based Collocator, (ii) a Comparable transmission Facility means, at a minimum, the provision of transmission capacity equivalent to fiber-optic cable with a minimum point-to-point symmetrical data capacity exceeding 12 DS3s; (iii) the network of a Fiber-Based Collocator may only be counted once in making a determination of the number of Fiber-Based Collocators, notwithstanding that such single Fiber-Based Collocator leases its facilities to other collocators in a single wire center; provided, however, that a collocating carrier's dark fiber leased from an unaffiliated carrier may only be counted as a separate fiber-optic cable from the unaffiliated carrier's fiber if the collocating carrier obtains this dark fiber on an IRU basis.

2.3 Unbundled Loop Modifications (Line Conditioning)

2.3.1 Line Conditioning is defined as routine network modification that BellSouth regularly undertakes to provide xDSL services to its own customers. This may include the removal of any device, from a copper Loop or copper Subloop that may diminish the capability of the Loop or Subloop to deliver high-speed switched wireline telecommunications capability, including xDSL service. Such devices include, load coils, excessive bridged taps, low pass filters, and range extenders. Excessive bridged taps are bridged taps that serves no network design purpose and that are beyond the limits set according to industry standards and/or the BellSouth's TR73600 Unbundled Local Loop Technical Specification.

2.3.2 BellSouth will remove load coils only on copper Loops and Subloops that are less than eighteen thousand (18,000) feet in length.

2.3.3 For any copper loop being ordered by DPI-Teleconnect which has over six thousand (6,000) feet of combined bridged tap will be modified, upon request from DPI-Teleconnect, so that the loop will have a maximum of six thousand (6,000)

feet of bridged tap. This modification will be performed at no additional charge to DPI-Teleconnect. Loop conditioning orders that require the removal of bridged tap that serves no network design purpose on a copper Loop that will result in a combined total of bridged tap between two thousand five hundred (2,500) and six thousand (6,000) feet will be performed at the rates set forth in Exhibit A of Attachment 2 of the Agreement.

2.3.4 DPI-Teleconnect may request removal of any unnecessary and non-excessive bridged tap (bridged tap between zero (0) and two thousand five hundred (2,500) feet which serves no network design purpose), at rates pursuant to BellSouth's SC Process as mutually agreed to by the Parties.

2.3.5 Rates for ULM are as set forth in Exhibit A of Attachment 2 of the Agreement.

2.3.6 BellSouth will not modify a Loop in such a way that it no longer meets the technical parameters of the original Loop type (e.g., voice grade, ADSL, etc.) being ordered.

2.3.7 If DPI-Teleconnect requests ULM on a reserved facility for a new Loop order, BellSouth may perform a pair change and provision a different Loop facility in lieu of the reserved facility with ULM if feasible. The Loop provisioned will meet or exceed specifications of the requested Loop facility as modified. DPI-Teleconnect will not be charged for ULM if a different Loop is provisioned. For Loops that require a DLR or its equivalent, BellSouth will provide LMU detail of the Loop provisioned.

2.3.8 DPI-Teleconnect shall request Loop make up information pursuant to this Attachment prior to submitting a service inquiry and/or a LSR for the Loop type that DPI-Teleconnect desires BellSouth to condition.

2.3.9 When requesting ULM for a Loop that BellSouth has previously provisioned for DPI-Teleconnect, DPI-Teleconnect will submit a SI to BellSouth. If a spare Loop facility that meets the Loop modification specifications requested by DPI-Teleconnect is available at the location for which the ULM was requested, DPI-Teleconnect will have the option to change the Loop facility to the qualifying spare facility rather than to provide ULM. In the event that BellSouth changes the Loop facility in lieu of providing ULM, DPI-Teleconnect will not be charged for ULM but will only be charged the service order charges for submitting an order.

2.4 <u>Subloop Elements.</u>

2.4.1 Where facilities permit, BellSouth shall offer access to its Unbundled Subloop (USL) elements as specified herein.

2.4.2 Unbundled Subloop Distribution (USLD)

2.4.2.1 The USLD facility is a dedicated transmission facility that BellSouth provides from an End User's point of demarcation to a BellSouth cross-connect device. The BellSouth cross-connect device may be located within a remote terminal (RT) or a stand-alone cross-box in the field or in the equipment room of a building. The USLD media is a copper twisted pair that can be provisioned as a 2-wire or 4-wire facility. BellSouth will make available the following subloop distribution offerings where facilities exist:

USLD – Voice Grade (USLD-VG)
Unbundled Copper Subloop (UCSL)
USLD – Intrabuilding Network Cable (USLD-INC (aka riser cable))

2.4.2.2 USLD-VG is a copper subloop facility from the cross-box in the field up to and including the point of demarcation at the End User's premises and may have load coils.

2.4.2.3 UCSL is a copper facility eighteen thousand (18,000) feet or less in length provided from the cross-box in the field up to and including the End User's point of demarcation. If available, this facility will not have any intervening equipment such as load coils between the End User and the cross-box.

2.4.2.3.1 If DPI-Teleconnect requests a UCSL and it is not available, DPI-Teleconnect may request the copper Subloop facility be modified pursuant to the ULM process to remove load coils and/or excessive bridged taps. If load coils and/or excessive bridged taps are removed, the facility will be classified as a UCSL.

2.4.2.4 USLD-INC is the distribution facility owned or controlled by BellSouth inside a building or between buildings on the same property that is not separated by a public street or road. USLD-INC includes the facility from the cross-connect device in the building equipment room up to and including the point of demarcation at the End User's premises.

2.4.2.4.1 Upon request for USLD-INC from DPI-Teleconnect, BellSouth will install a cross-connect panel in the building equipment room for the purpose of accessing USLD-INC pairs from a building equipment room. The cross-connect panel will function as a single point of interconnection (SPOI) for USLD-INC and will be accessible by multiple carriers as space permits. BellSouth will place cross-connect blocks in twenty five (25) pair increments for DPI-Teleconnect's use on this cross-connect panel. DPI-Teleconnect will be responsible for connecting its facilities to the twenty five (25) pair cross-connect block(s).

2.4.2.5 For access to Voice Grade USLD and UCSL, DPI-Teleconnect shall install a cable to the BellSouth cross-box pursuant to the terms and conditions for physical collocation for remote sites set forth in Attachment 4. This cable would be

connected by a BellSouth technician within the BellSouth cross-box during the set-up process. DPI-Teleconnect's cable pairs can then be connected to BellSouth's USL within the BellSouth cross-box by the BellSouth technician.

2.4.2.6 Through the SI process, BellSouth will determine whether access to USLs at the location requested by DPI-Teleconnect is technically feasible and whether sufficient capacity exists in the cross-box. If existing capacity is sufficient to meet DPI-Teleconnect's request, then BellSouth will perform the site set-up as described in the CLEC Information Package, located at BellSouth's Interconnection Web site: www.interconnection.bellsouth.com/products/html/unes.html.

2.4.2.7 The site set-up must be completed before DPI-Teleconnect can order Subloop pairs. For the site set-up in a BellSouth cross-connect box in the field, BellSouth will perform the necessary work to splice DPI-Teleconnect's cable into the cross-connect box. For the site set-up inside a building equipment room, BellSouth will perform the necessary work to install the cross-connect panel and the connecting block(s) that will be used to provide access to the requested USLs.

2.4.2.8 Once the site set-up is complete, DPI-Teleconnect will request Subloop pairs through submission of a LSR form to the LCSC. OC is required with USL pair provisioning when DPI-Teleconnect requests reuse of an existing facility, and the OC charge shall be billed in addition to the USL pair rate. For expedite requests by DPI-Teleconnect for Subloop pairs, expedite charges will apply for intervals less than five (5) days.

2.4.2.9 USLs will be provided in accordance with BellSouth's TR73600 Unbundled Local Loop Technical Specifications.

2.4.3 <u>Unbundled Network Terminating Wire (UNTW)</u>

2.4.3.1 UNTW is unshielded twisted copper wiring that is used to extend circuits from an intra-building network cable terminal or from a building entrance terminal to an individual End User's point of demarcation. It is the final portion of the Loop that in multi-subscriber configurations represents the point at which the network branches out to serve individual subscribers.

2.4.3.2 This element will be provided in MDUs and/or Multi-Tenants Units (MTUs) where either Party owns wiring all the way to the End User's premises. Neither Party will provide this element in locations where the property owner provides its own wiring to the End User's premises, where a third party owns the wiring to the End User's premises.

2.4.3.3 <u>Requirements</u>

2.4.3.3.1 On a multi-unit premises, upon request of the other Party (Requesting Party), the Party owning the network terminating wire (Provisioning Party) will provide access to UNTW pairs on an Access Terminal that is suitable for use by multiple carriers at each Garden Terminal or Wiring Closet.

2.4.3.3.2 The Provisioning Party shall not be required to install new or additional NTW beyond existing NTW to provision the services of the Requesting Party.

2.4.3.3.3 In existing MDUs and/or MTUs in which BellSouth does not own or control wiring (INC/NTW) to the End Users premises, and DPI-Teleconnect does own or control such wiring, DPI-Teleconnect will install UNTW Access Terminals for BellSouth under the same terms and conditions as BellSouth provides UNTW Access Terminals to DPI-Teleconnect.

2.4.3.3.4 In situations in which BellSouth activates a UNTW pair, BellSouth will compensate DPI-Teleconnect for each pair activated commensurate to the price specified in DPI-Teleconnect's Agreement.

2.4.3.3.5 Upon receipt of the UNTW SI requesting access to the Provisioning Party's UNTW pairs at a multi-unit premises, representatives of both Parties will participate in a meeting at the site of the requested access. The purpose of the site visit will include discussion of the procedures for installation and location of the Access Terminals. By request of the Requesting Party, an Access Terminal will be installed either adjacent to each of the Provisioning Party's Garden Terminal or inside each Wiring Closet. The Requesting Party will deliver and connect its central office facilities to the UNTW pairs within the Access Terminal. The Requesting Party may access any available pair on an Access Terminal. A pair is available when a pair is not being utilized to provide service or where the End User has requested a change in its local service provider to the Requesting Party. Prior to connecting the Requesting Party's service on a pair previously used by the Provisioning Party, the Requesting Party is responsible for ensuring the End User is no longer using the Provisioning Party's service or another CLEC's service before accessing UNTW pairs.

2.4.3.3.6 Access Terminal installation intervals will be established on an individual case basis.

2.4.3.3.7 The Requesting Party is responsible for obtaining the property owner's permission for the Provisioning Party to install an Access Terminal(s) on behalf of the Requesting Party. The submission of the SI by the Requesting Party will serve as certification by the Requesting Party that such permission has been obtained. If the property owner objects to Access Terminal installations that are in progress or within thirty (30) days after completion and demands removal of Access Terminals, the Requesting Party will be responsible for costs associated with removing Access Terminals and restoring the property to its original state prior to Access Terminals being installed.

2.4.3.3.8 The Requesting Party shall indemnify and hold harmless the Provisioning Party against any claims of any kind that may arise out of the Requesting Party's failure to obtain the property owner's permission. The Requesting Party will be billed for nonrecurring and recurring charges for accessing UNTW pairs at the time the Requesting Party activates the pair(s). The Requesting Party will notify the Provisioning Party within five (5) business days of activating UNTW pairs using the LSR form.

2.4.3.3.9 If a trouble exists on a UNTW pair, the Requesting Party may use an alternate spare pair that serves that End User if a spare pair is available. In such cases, the Requesting Party will re-terminate its existing jumper from the defective pair to the spare pair. Alternatively, the Requesting Party will isolate and report troubles in the manner specified by the Provisioning Party. The Requesting Party must tag the UNTW pair that requires repair. If the Provisioning Party dispatches a technician on a reported trouble call and no UNTW trouble is found, the Provisioning Party will charge Requesting Party for time spent on the dispatch and testing the UNTW pair(s).

2.4.3.3.10 If the Requesting Party initiates the Access Terminal installation and the Requesting Party has not activated at least ten percent (10%) of the capacity of the Access Terminal installed pursuant to the Requesting Party's request for an Access Terminal within six (6) months of installation of the Access Terminal, the Provisioning Party will bill the Requesting Party a nonrecurring charge equal to the actual cost of provisioning the Access Terminal.

2.4.3.3.11 If the Provisioning Party determines that the Requesting Party is using the UNTW pairs without reporting the activation of the pairs, the Requesting Party will be billed for the use of that pair back to the date the End User began receiving service from the Requesting Party at that location. Upon request, the Requesting Party will provide copies of its billing record to substantiate such date. If the Requesting Party fails to provide such records, then the Provisioning Party will bill the Requesting Party back to the date of the Access Terminal installation.

2.4.4 <u>Dark Fiber Loop</u>

2.4.4.1 Dark Fiber Loop is an unused optical transmission facility, without attached signal regeneration, multiplexing, aggregation or other electronics, from the demarcation point at an End User's premises to the End User's serving wire center. Dark Fiber Loops may be strands of optical fiber existing in aerial or underground structure. BellSouth will not provide line terminating elements, regeneration or other electronics necessary for DPI-Teleconnect to utilize Dark Fiber Loops.

2.4.4.2 <u>Transition for Dark Fiber Loop</u>

2.4.4.2.1 For purposes of this Section 2.4.4, the Transition Period for Dark Fiber Loops is the eighteen (18) month period beginning March 11, 2005 and ending September 10, 2006.

2.4.4.2.2 For purposes of this Section 2.4.4, Embedded Base means Dark Fiber Loops that were in service for DPI-Teleconnect as of March 10, 2005. For the state of South Carolina, during the Transition Period DPI-Teleconnect shall be entitled to order and BellSouth shall provision moves, changes and additions of and to Dark Fiber Loops that DPI-Teleconnect orders for the purpose of serving CLEC's existing Dark Fiber Loop End Users as of March 10, 2005, at such End Users' new or existing physical locations, and such facilities shall be included in the Embedded Base. Subsequent disconnects or loss of End Users shall be removed from the Embedded Base.

2.4.4.3 During the Transition Period only, BellSouth shall make available for the Embedded Base Dark Fiber Loops for DPI-Teleconnect at the terms and conditions set forth in this Attachment.

2.4.4.4 Notwithstanding the Effective Date of this Agreement, the rates for DPI-Teleconnect's Embedded Base of Dark Fiber Loops during the Transition Period shall be equal to the higher of 115% of the rate paid for that element on June 15, 2004 or 115% of a new rate the Commission establishes, if any, between June 16, 2004 and March 11, 2005. These rates shall be as set forth in Exhibit A to Attachment 2 of the Agreement and this Section 2.4.4.4.

2.4.4.5 The Transition Period shall apply only to DPI-Teleconnect's Embedded Base and DPI-Teleconnect shall not add new Dark Fiber Loops pursuant to this Agreement.

2.4.4.6 Effective September 11, 2006, Dark Fiber Loops will no longer be made available pursuant to this Agreement.

2.4.4.7 No later than June 10, 2006 DPI-Teleconnect shall submit spreadsheet(s) identifying all of the Embedded Base of circuits to be either disconnected or converted to other BellSouth services as Conversions pursuant to Section 1.3 above. The Parties shall negotiate a project schedule for the Conversion of the Embedded Base.

2.4.4.7.1 If DPI-Teleconnect fails to submit the spreadsheet(s) specified in Section 2.4.4.7 above for all of its Embedded Base prior to June 10, 2006, BellSouth will identify DPI-Teleconnect's remaining Embedded Base, if any, and will transition such circuits to the equivalent tariffed BellSouth service(s). Those circuits identified and transitioned by BellSouth pursuant to this Section 2.4.4.7.1 shall be subject to all applicable disconnect charges as set forth in this Agreement and the full nonrecurring charges for installation of the equivalent tariffed BellSouth service as set forth in BellSouth's tariffs.

2.4.4.7.2 For Embedded Base circuits converted pursuant to Section 2.4.4.7 above or transitioned pursuant to Section 2.4.4.7.1 above, the applicable recurring tariff charge shall apply to each circuit as of the earlier of the date each circuit is converted or transitioned, as applicable, or September 11, 2006.

3 Line Splitting

3.1 Line splitting shall mean that a provider of data services (a Data LEC) and a provider of voice services (a Voice CLEC) to deliver voice and data service to End Users over the same Loop. The Voice CLEC and Data LEC may be the same or different carriers.

3.2 Line Splitting – UNE-L. In the event DPI-Teleconnect provides its own switching or obtains switching from a third party, DPI-Teleconnect may engage in line splitting arrangements with another CLEC using a splitter, provided by DPI-Teleconnect, in a Collocation Space at the central office where the loop terminates into a distribution frame or its equivalent.

3.3 Provisioning Line Splitting and Splitter Space – UNE-L

3.3.1 The Voice CLEC provides the splitter when providing Line Splitting with UNE-L. When DPI-Teleconnect owns the splitter, Line Splitting requires the following: a loop from NID at the End User's location to the serving wire center and terminating into a distribution frame or its equivalent.

3.4 CLEC Provided Splitter – Line Splitting –UNE-L

3.4.1 To order High Frequency Spectrum on a particular Loop, DPI-Teleconnect must have a DSLAM collocated in the central office that serves the End User of such Loop.

3.4.2 DPI-Teleconnect may purchase, install and maintain central office POTS splitters in its collocation arrangements. DPI-Teleconnect may use such splitters for access to its customers and to provide digital line subscriber services to its customers using the High Frequency Spectrum. Existing Collocation rules and procedures and the terms and conditions relating to Collocation set forth in Attachment 4-Central Office shall apply.

3.4.3 Any splitters installed by DPI-Teleconnect in its collocation arrangement shall comply with ANSI T1.413, Annex E, or any future ANSI splitter Standards. DPI-Teleconnect may install any splitters that BellSouth deploys or permits to be deployed for itself or any BellSouth affiliate.

3.5 Maintenance – Line Splitting – UNE-L

3.5.1 BellSouth will be responsible for repairing voice troubles and the troubles with the physical loop between the NID at the End User's premises and the termination point.

3.5.2 DPI-Teleconnect shall indemnify, defend and hold harmless BellSouth from and against any claims, losses, actions, causes of action, suits, demands, damages, injury, and costs including reasonable attorney fees, which arise out of actions

related to the other service provider, except to the extent caused by BellSouth's gross negligence or willful misconduct.

4 EEL Audits

4.1 BellSouth may, on an annual basis, audit DPI-Teleconnect's records in order to verify compliance with the qualifying service eligibility criteria. The audit shall be conducted by a third party independent auditor, and the audit must be performed in accordance with the standards established by the American Institute for Certified Public Accountants (AICPA). To the extent the independent auditor's report concludes that DPI-Teleconnect failed to comply with the service eligibility criteria, DPI-Teleconnect must true-up any difference in payments, convert all noncompliant circuits to the appropriate service, and make the correct payments on a going-forward basis. In the event the auditor's report concludes that DPI-Teleconnect did not comply in any material respect with the service eligibility criteria, DPI-Teleconnect shall reimburse BellSouth for the cost of the independent auditor. To the extent the auditor's report concludes that DPI-Teleconnect did comply in all material respects with the service eligibility criteria, BellSouth will reimburse DPI-Teleconnect for its reasonable and demonstrable costs associated with the audit. DPI-Teleconnect will maintain appropriate documentation to support its certifications.

4.2 In the event DPI-Teleconnect converts special access services to UNEs, DPI-Teleconnect shall be subject to the termination liability provisions in the applicable special access tariffs, if any.

5 Dedicated Transport and Dark Fiber Transport

5.1 Dedicated Transport. Dedicated Transport is defined as BellSouth's transmission facilities between wire centers or switches owned by BellSouth, or between wire centers or switches owned by BellSouth and switches owned by DPI-Teleconnect, including but not limited to DS1, DS3 and OCn level services, as well as dark fiber, dedicated to DPI-Teleconnect. BellSouth shall not be required to provide access to OCn level Dedicated Transport under any circumstances pursuant to this Agreement. In addition, except as set forth in Section 5.2 below, BellSouth shall not be required to provide to DPI-Teleconnect unbundled access to interoffice transmission facilities that do not connect a pair of wire centers or switches owned by BellSouth ("Entrance Facilities").

5.2 Transition for DS1 and DS3 Dedicated Transport Including DS1 and DS3 Entrance Facilities

5.2.1 For purposes of this Section 5.2, the Transition Period for the Embedded Base of DS1 and DS3 Dedicated Transport, Embedded Base Entrance Facilities and for

Excess DS1 and DS3 Dedicated Transport, is the twelve (12) month period beginning March 11, 2005 and ending March 10, 2006.

5.2.2 For purposes of this Section 5.2, Embedded Base means DS1 and DS3 Dedicated Transport that were in service for DPI-Teleconnect as of March 10, 2005 in those wire centers that, as of such date, met the criteria set forth in Sections 5.2.6.1 or 5.2.6.2 below. For the state of South Carolina, during the Transition Period DPI-Teleconnect shall be entitled to order and BellSouth shall provision moves, changes and additions of and to DS1 and DS3 Dedicated Transport that DPI-Teleconnect orders for the purpose of serving CLEC's existing DS1 and DS3 Dedicated Transport End Users as of March 10, 2005, at such End Users' new or existing physical locations, and such facilities shall be included in the Embedded Base. Subsequent disconnects or loss of End Users shall be removed from the Embedded Base.

5.2.3 For purposes of this Section 5, Embedded Base Entrance Facilities mean Entrance Facilities that were in service for DPI-Teleconnect as of March 10, 2005. Subsequent disconnects or loss of customers shall be removed from the Embedded Base.

5.2.4 For purposes of this Section 5, Excess DS1 and DS3 Dedicated Transport mean those DPI-Teleconnect DS1 and DS3 Dedicated Transport facilities in service as of March 10, 2005, in excess of the caps set forth in Section 5.6 below. Subsequent disconnects and loss of End Users shall be removed from Excess DS1 and DS3 Loops.

5.2.5 For purposes of this Section 5.2, a Business Line is as defined in 47 C.F.R. § 51.5.

5.2.6 Notwithstanding anything to the contrary in this Agreement, BellSouth shall make available Dedicated Transport as described in this Section 5.2 only for DPI-Teleconnect's Embedded Base and Excess Dedicated Transport during the Transition Period:

5.2.6.1 DS1 Dedicated Transport where both wire centers at the end points of the route contain 38,000 or more Business Lines or four (4) or more fiber-based collocators.

5.2.6.2 DS3 Dedicated Transport where both wire centers at the end points of the route contain 24,000 or more Business Lines or three (3) or more fiber-based collocators.

5.2.6.3 A list of wire centers meeting the criteria set forth in Sections 5.2.6.1 or 5.2.6.2 above as of March 10, 2005, as ordered by the Public Service Commission of South Carolina in Docket No. 2004-316-C (Initial Wire Center List), is attached to BellSouth's Carrier Notification Letter SN91086058, dated March 20, 2006, which is available on BellSouth's Interconnection Services Web site.

5.2.6.4 Notwithstanding anything to the contrary in this Agreement, BellSouth shall make available Entrance Facilities only for <DPI-Teleconnect's Embedded Base Entrance Facilities and only during the Transition Period.

5.2.6.5 Notwithstanding the Effective Date of this Agreement, during the Transition Period, the rates for DPI-Teleconnect's Embedded Base of DS1 and DS3 Dedicated Transport, DPI-Teleconnect's Excess DS1 and DS3 Dedicated Transport, and DPI-Teleconnect's Embedded Base Entrance Facilities as described in this Section 5.2, shall be equal to the higher of 115% of the rate paid for that element on June 15, 2004 or 115% of a new rate the Commission establishes, if any, between June 16, 2004 and March 11, 2005. These rates shall be as set forth in Exhibit A to Attachment 2 of the Agreement and this Section 5.2.6.5.

5.2.6.6 The Transition Period shall apply only to (1) DPI-Teleconnect's Embedded Base and Embedded Base Entrance Facilities; and (2) DPI-Teleconnect's Excess DS1 and DS3 Dedicated Transport. DPI-Teleconnect shall not add new Entrance Facilities pursuant to this Agreement. Further, DPI-Teleconnect shall not add new DS1 or DS3 Dedicated Transport as described in this Section 5.2 pursuant to this Agreement, except pursuant to the self-certification process as set forth in Section 1.5 above of and as set forth in Section 5.2.6.10 below.

5.2.6.7 Once a wire center exceeds either of the thresholds set forth in Section 5.2.6.1 above, no future DS1 Dedicated Transport unbundling will be required in that wire center.

5.2.6.8 Once a wire center exceeds either of the thresholds set forth in Section 5.2.6.2 above, no future DS3 Dedicated Transport will be required in that wire center.

5.2.6.9 No later than December 9, 2005 DPI-Teleconnect shall submit spreadsheet(s) identifying all of the Embedded Base of circuits, Embedded Base Entrance Facilities, and Excess DS1 and DS3 Dedicated Transport to be either disconnected or converted to other BellSouth services pursuant to Section 1.3 above. The Parties shall negotiate a project schedule for the Conversion of the Embedded Base, Embedded Base Entrance Facilities and Excess DS1 and DS3 Dedicated Transport.

5.2.6.9.1 If DPI-Teleconnect fails to submit the spreadsheet(s) specified in Section 5.2.6.9 above for all of its Embedded Base, Embedded Base Entrance Facilities and Excess DS1 and DS3 Dedicated Transport prior to December 9, 2005, BellSouth will identify DPI-Teleconnect's remaining Embedded Base, Embedded Base Entrance Facilities and Excess DS1 and DS3 Dedicated Transport, if any, and will transition such circuits to the equivalent tariffed BellSouth service(s). Those circuits identified and transitioned by BellSouth pursuant to this Section 5.2.6.9.1 shall be subject to all applicable disconnect charges as set forth in this Agreement and the full nonrecurring charges for installation of the equivalent tariffed BellSouth service as set forth in BellSouth's tariffs.

5.2.6.9.2 For Embedded Base circuits, Embedded Base Entrance Facilities and Excess DS1 and DS3 Dedicated Transport converted pursuant to Section 5.2.6.9 or transitioned pursuant to Section 5.2.6.9.1 above, the applicable recurring tariff charge shall apply to each circuit as of the earlier of the date each circuit is converted or transitioned, as applicable, or March 11, 2006.

5.2.6.10 Modifications and Updates to the Wire Center List and Subsequent Transition Periods

5.2.6.10.1 In the event BellSouth identifies additional wire centers that meet the criteria set forth in Sections 5.2.6.1 or 5.2.6.2 above, but that were not included in the Initial Wire Center List, BellSouth shall include such additional wire centers in CNL. Each such list of additional wire centers shall be considered a Subsequent Wire Center List.

5.2.6.10.2 Effective ten (10) business days after the date of a BellSouth CNL providing a Subsequent Wire Center List, BellSouth shall not be required to provide DS1 and DS3 Dedicated Transport, as applicable, in such additional wire center(s), except pursuant to the self-certification process as set forth in Section 1.5 above.

5.2.6.10.3 For purposes of Section 5.2.6.10 above, BellSouth shall make available DS1 and DS3 Dedicated Transport that was in service for DPI-Teleconnect in a wire center on the Subsequent Wire Center List as of the tenth (10th) business day after the date of BellSouth's CNL identifying the Subsequent Wire Center List (Subsequent Embedded Base) until ninety (90) days after the tenth (10th) business day from the date of BellSouth's CNL identifying the Subsequent Wire Center List (Subsequent Transition Period).

5.2.6.10.4 Subsequent disconnects or loss of End Users shall be removed from the Subsequent Embedded Base.

5.2.6.10.5 The rates set forth in Exhibit A of Attachment 2 of the Agreement plus 15% shall apply to the Subsequent Embedded Base during the Subsequent Transition Period.

5.2.6.10.6 No later than forty (40) days from BellSouth's CNL identifying the Subsequent Wire Center List DPI-Teleconnect shall submit a spreadsheet(s) identifying the Subsequent Embedded Base of circuits to be disconnected or converted to other BellSouth services. The Parties shall negotiate a project schedule for the Conversion of the Subsequent Embedded Base.

5.2.6.10.6.1 If DPI-Teleconnect fails to submit the spreadsheet(s) specified in Section 5.2.6.10.6 above for all of its Subsequent Embedded Base within forty (40) days after the date of BellSouth's CNL identifying the Subsequent Wire Center List, BellSouth will identify DPI-Teleconnect's remaining Subsequent Embedded Base, if any, and will transition such circuits to the equivalent tariffed BellSouth

service(s). Those circuits identified and transitioned by BellSouth shall be subject to the applicable disconnect charges as set forth in this Agreement and the full nonrecurring charges for installation of the equivalent tariffed BellSouth service as set forth in BellSouth's tariffs.

5.2.6.10.7 For Subsequent Embedded Base circuits converted pursuant to Section 5.2.6.10.6 above or transitioned pursuant to Section 5.2.6.10.6.1 above, the applicable recurring tariff charges shall apply as of the earlier of the date each circuit is converted or transitioned, as applicable, or the first day after the end of the Subsequent Transition Period.

5.3 BellSouth shall:

5.3.1 Provide DPI-Teleconnect exclusive use of Dedicated Transport to a particular customer or carrier;

5.3.2 Provide all technically feasible features, functions, and capabilities of Dedicated Transport as outlined within the technical requirements of this section;

5.3.3 Permit, to the extent technically feasible, DPI-Teleconnect to connect Dedicated Transport to equipment designated by DPI-Teleconnect, including but not limited to, DPI-Teleconnect's collocated facilities; and

5.3.4 Permit, to the extent technically feasible, DPI-Teleconnect to obtain the functionality provided by BellSouth's digital cross-connect systems.

5.4 BellSouth shall offer Dedicated Transport:

5.4.1 As capacity on a shared facility; and

5.4.2 As a circuit (i.e., DS0, DS1, DS3, STS-1) dedicated to DPI-Teleconnect.

5.5 Dedicated Transport may be provided over facilities such as optical fiber, copper twisted pair, and coaxial cable, and shall include transmission equipment such as line terminating equipment, amplifiers, and regenerators.

5.6 DPI-Teleconnect may obtain a maximum of twelve (12) unbundled DS3 Dedicated Transport circuits on each route where DS3 Dedicated Transport is available as a Network Element, and a maximum of ten (10) unbundled DS1 Dedicated Transport circuits on each Route where there is no 251(c)(3) unbundling obligation for DS3 Dedicated Transport but for which impairment exists for DS1 Dedicated Transport. A route is defined as a transmission path between one of BellSouth's wire centers or switches and another of BellSouth's wire centers or switches. A route between two (2) points may pass through one or more intermediate wire centers or switches. Transmission paths between identical end

points are the same "route", irrespective of whether they pass through the same intermediate wire centers or switches, if any.

5.7 Technical Requirements

5.7.1 BellSouth shall offer DS0 equivalent interface transmission rates for DS0 or voice grade Dedicated Transport. For DS1 or DS3 circuits, Dedicated Transport shall at a minimum meet the performance, availability, jitter, and delay requirements specified for Customer Interface to Central Office (CI to CO) connections in the applicable industry standards.

5.7.2 BellSouth shall offer the following interface transmission rates for Dedicated Transport:

5.7.2.1 DS0 Equivalent;

5.7.2.2 DS1;

5.7.2.3 DS3;

5.7.2.4 STS-1; and

5.7.2.5 SDH (Synchronous Digital Hierarchy) Standard interface rates are in accordance with International Telecommunications Union (ITU) Recommendation G.707 and Plesiochronous Digital Hierarchy (PDH) rates per ITU Recommendation G.704.

5.7.3 BellSouth shall design Dedicated Transport according to its network infrastructure. DPI-Teleconnect shall specify the termination points for Dedicated Transport.

5.7.4 At a minimum, Dedicated Transport shall meet each of the requirements set forth in the applicable industry technical references and BellSouth Technical References;

5.7.4.1 Telcordia TR-TSY-000191 Alarm Indication Signals Requirements and Objectives, Issue 1, May 1986.

5.7.4.2 BellSouth's TR73501 LightGate®Service Interface and Performance Specifications, Issue D, June 1995.

5.7.4.3 BellSouth's TR73525 MegaLink®Service, MegaLink Channel Service and MegaLink Plus Service Interface and Performance Specifications, Issue C, May 1996.

5.8 Dark Fiber Transport. Dark Fiber Transport is defined as Dedicated Transport that consists of unactivated optical interoffice transmission facilities without attached signal regeneration, multiplexing, aggregation or other electronics. Except as set forth in Section 5.8.1 below, BellSouth shall not be required to

provide access to Dark Fiber Transport Entrance Facilities pursuant to this Agreement.

5.8.1 Transition for Dark Fiber Transport and Dark Fiber Transport Entrance Facilities

5.8.1.1 For purposes of this Section 5.8, the Transition Period for the Embedded Base of Dark Fiber Transport is the eighteen (18) month period beginning March 11, 2005 and ending September 10, 2006.

5.8.1.2 For purposes of this Section 5.8, Embedded Base means Dark Fiber Transport that was in service for DPI-Teleconnect as of March 10, 2005 in those wire centers that, as of such date, met the criteria set forth in 5.8.1.4.1. For the state of South Carolina, during the Transition Period DPI-Teleconnect shall be entitled to order and BellSouth shall provision moves, changes and additions of and to Dark Fiber Transport that DPI-Teleconnect orders for the purpose of serving CLEC's existing Dark Fiber Transport End Users as of March 10, 2005, at such End Users' new or existing physical locations, and such facilities shall be included in the Embedded Base. Subsequent disconnects or loss of End Users shall be removed from the Embedded Base.

5.8.1.3 For purposes of this Section 5.8, a Business Line is as defined in 47 C.F.R. § 51.5.

5.8.1.4 Notwithstanding anything to the contrary in this Agreement, BellSouth shall make available Dark Fiber Transport as described in this Section 5.8 only for DPI-Teleconnect's Embedded Base during the Transition Period:

5.8.1.4.1 Dark Fiber Transport where both wire centers at the end points of the route contain twenty-four thousand (24,000) or more Business Lines or three (3) or more fiber-based collocators.

5.8.1.5 A list of wire centers meeting the criteria set forth in Section 5.8.1.4 above as of March 10, 2005, ("Initial List") as ordered by the Public Service Commission of South Carolina in Docket No. 2004-316-C (Initial Wire Center List), is attached to BellSouth's Carrier Notification Letter SN91086058, dated March 20, 2006, which is available on BellSouth's Interconnection Services Web site.

5.8.1.6 Notwithstanding the Effective Date of this Agreement, during the Transition Period, the rates for DPI-Teleconnect's Embedded Base of Dark Fiber Transport and DPI-Teleconnect's Embedded Base of Dark Fiber Transport Entrance Facilities as described in Section 5.8.1.2 above shall be equal to the higher of 115% of the rate paid for that element on June 15, 2004 or 115% of a new rate the Commission establishes, if any, between June 16, 2004 and March 11, 2005. These rates shall be as set forth in Exhibit A Attachment 2 of the Agreement and this Section 5.8.1.6.

5.8.1.7 The Transition Period shall apply only to DPI-Teleconnect's Embedded Base of Dark Fiber Transport and Dark Fiber Entrance Facilities. DPI-Teleconnect shall not add new Dark Fiber Transport as described in this Section 5.8 except pursuant to the self-certification process as set forth in Section 1.5 of this Attachment and as set forth in Section 5.8.1.10 below. Further, DPI-Teleconnect shall not add new Dark Fiber Entrance Facilities pursuant to this Agreement.

5.8.1.8 Once a wire center exceeds either of the thresholds set forth in this Section 5.8.1.4 above, no future Dark Fiber Transport unbundling will be required in that wire center.

5.8.1.9 No later than June 10, 2006 DPI-Teleconnect shall submit spreadsheet(s) identifying all of the Embedded Base of Dark Fiber Transport and Dark Fiber Entrance Facilities to be either disconnected or converted to other BellSouth services as Conversions pursuant to Section 1.3 above. The Parties shall negotiate a project schedule for the Conversion of the Embedded Base.

5.8.1.9.1 If DPI-Teleconnect fails to submit the spreadsheet(s) specified in Section 5.8.1.9 above for all of its Embedded Base prior to June 10, 2006, BellSouth will identify DPI-Teleconnect's remaining Embedded Base, if any, and will transition such circuits to the equivalent tariffed BellSouth service(s). Those circuits identified and transitioned by BellSouth pursuant to this Section 5.8.1.9.1 shall be subject to all applicable disconnect charges as set forth in this Agreement and the full nonrecurring charges for installation of the equivalent tariffed BellSouth service as set forth in BellSouth's tariffs.

5.8.1.9.2 For Embedded Base circuits converted pursuant to Section 5.8.1.9 above or transitioned pursuant to Section 5.8.1.9.1 above, the applicable recurring tariff charge shall apply to each circuit as of the earlier of the date each circuit is converted or transitioned, as applicable, or September 11, 2006.

5.8.1.10 <u>Modifications and Updates to the Wire Center List and Subsequent Transition Periods</u>

5.8.1.10.1 In the event BellSouth identifies additional wire centers that meet the criteria set forth in Section 5.8.1.4.1 above, but that were not included in the Initial Wire Center List, BellSouth shall include such additional wire centers in a CNL. Each such list of additional wire centers shall be considered a "Subsequent Wire Center List".

5.8.1.10.2 Effective ten (10) business days after the date of a BellSouth CNL providing a Subsequent Wire Center List, BellSouth shall not be required to provide unbundled access to Dark Fiber Transport, as applicable, in such additional wire center(s), except pursuant to the self-certification process as set forth in Section 1.5 above.

5.8.1.10.3 For purposes of Section 5.8.1.10, BellSouth shall make available Dark Fiber Transport that were in service for DPI-Teleconnect in a wire center on the Subsequent Wire Center List as of the tenth (10th) business day after the date of BellSouth's CNL identifying the Subsequent Wire Center List (Subsequent Embedded Base) until ninety (90) days after the tenth (10th) business day from the date of BellSouth's CNL identifying the Subsequent Wire Center List (Subsequent Transition Period).

5.8.1.10.4 Subsequent disconnects or loss of End Users shall be removed from the Subsequent Embedded Base. 5.8.1.10.5 The rates set forth in Exhibit A of Attachment 2 of the Agreement plus 15% shall apply to the Subsequent Embedded Base during the Subsequent Transition Period.

5.8.1.10.6 No later than forty (40) days from BellSouth's CNL identifying the Subsequent Wire Center List DPI-Teleconnect shall submit a spreadsheet(s) identifying the Subsequent Embedded Base of circuits to be disconnected or converted to other BellSouth services. The Parties shall negotiate a project schedule for the Conversion of the Subsequent Embedded Base.

5.8.1.10.6.1 If DPI-Teleconnect fails to submit the spreadsheet(s) specified in Section 5.8.1.10.6 above for all of its Subsequent Embedded Base within forty (40) days after the date of BellSouth's CNL identifying the Subsequent Wire Center List, BellSouth will identify DPI-Teleconnect's remaining Subsequent Embedded Base, if any, and will transition such circuits to the equivalent tariffed BellSouth service(s). Those circuits identified and transitioned by BellSouth shall be subject to the applicable disconnect charges as set forth in this Agreement and the full nonrecurring charges for installation of the equivalent tariffed BellSouth service as set forth in BellSouth's tariffs.

5.8.1.10.6.2 For Subsequent Embedded Base circuits converted pursuant to Section 5.8.1.10.6 above or transitioned pursuant to Section 5.8.1.10.6.1 above, the applicable recurring tariff charges shall apply as of the earlier of the date each circuit is converted or transitioned, as applicable, or the first day after the end of the Subsequent Transition Period.

6 Automatic Location Identification/Data Management System

6.1 <u>911 and E911 Databases</u>

6.1.1 BellSouth shall provide DPI-Teleconnect with nondiscriminatory access to 911 and E911 databases on an unbundled basis, in accordance with 47 C.F.R. § 51.319 (f).

6.1.2 The ALI/DMS database contains End User information (including name, address, telephone information, and sometimes special information from the local service provider or End User) used to determine to which PSAP to route the call. The

ALI/DMS database is used to provide enhanced routing flexibility for E911. DPI-Teleconnect will be required to provide the BellSouth 911 database vendor daily service order updates to E911 database in accordance with Section 6.2.1 below.

6.2 Technical Requirements

6.2.1 BellSouth's 911 database vendor shall provide DPI-Teleconnect the capability of providing updates to the ALI/DMS database through a specified electronic interface. DPI-Teleconnect shall contact BellSouth's 911 database vendor directly to request interface. DPI-Teleconnect shall provide updates directly to BellSouth's 911 database vendor on a daily basis. Updates shall be the responsibility of DPI-Teleconnect and BellSouth shall not be liable for the transactions between DPI-Teleconnect and BellSouth's 911 database vendor.

6.2.2 It is DPI-Teleconnect's responsibility to retrieve and confirm statistical data and to correct errors obtained from BellSouth's 911 database vendor on a daily basis. All errors will be assigned a unique error code and the description of the error and the corrective action is described in the CLEC Users Guide for Facility Based Providers that is found on the BellSouth Interconnection Web site.

6.2.3 DPI-Teleconnect shall conform to the BellSouth standards as described in the CLEC Users Guide to E911 for Facilities Based Providers that is located on the BellSouth's Interconnection Web site: www.interconnection.bellsouth.com/guides.

6.2.4 Stranded Unlocks are defined as End User records in BellSouth's ALI/DMS database that have not been migrated for over ninety (90) days to DPI-Teleconnect, as a new provider of local service to the End User. Stranded Unlocks are those End User records that have been "unlocked" by the previous local exchange carrier that provided service to the End User and are open for DPI-Teleconnect to assume responsibility for such records.

6.2.5 Based upon End User record ownership information available in the NPAC database, BellSouth shall provide a Stranded Unlock annual report to DPI-Teleconnect that reflects all Stranded Unlocks that remain in the ALI/DMS database for over ninety (90) days. DPI-Teleconnect shall review the Stranded Unlock report, identify its End User records and request to either delete such records or migrate the records to DPI-Teleconnect within two (2) months following the date of the Stranded Unlock report provided by BellSouth. DPI-Teleconnect shall reimburse BellSouth for any charges BellSouth's database vendor imposes on BellSouth for the deletion of DPI-Teleconnect's records.

UNBUNDLED NETWORK ELEMENTS - South Carolina														Attachment: 2 Exh A			
CATEGORY	RATE ELEMENTS	Interim	Zone	BCS	USOC	RATES($)					Svc Order Submitted Elec per LSR	Svc Order Submitted Manually per LSR	Incremental Charge - Manual Svc Order vs. Electronic-1st	Incremental Charge - Manual Svc Order vs. Electronic-Add'l	Incremental Charge - Manual Svc Order vs. Electronic-Disc 1st	Incremental Charge - Manual Svc Order vs. Electronic-Disc Add'l
							Nonrecurring		Nonrecurring Disconnect		OSS Rates($)					
						Rec	First	Add'l	First	Add'l	SOMEC	SOMAN	SOMAN	SOMAN	SOMAN	SOMAN
UNBUNDLED EXCHANGE ACCESS LOOP																
2-WIRE ANALOG VOICE GRADE LOOP																
	Switch-As-Is Conversion rate per UNE Loop, Single LSR, (per DS0)			UEA	URESL		24.88	3.51								
	Switch-As-Is Conversion rate per UNE Loop, Spreadsheet, (per DS0)			UEA	URESP		26.37	4.99								
4-WIRE ANALOG VOICE GRADE LOOP																
	Switch-As-Is Conversion rate per UNE Loop, Single LSR, (per DS0)			UEA	URESL		24.88	3.51								
	Switch-As-Is Conversion rate per UNE Loop, Spreadsheet, (per DS0)			UEA	URESP		26.37	4.99								
4-WIRE DS1 DIGITAL LOOP																
	Switch-As-Is Conversion rate per UNE Loop, Single LSR, (per DS1)			USL	URESL		24.88	3.51								
	Switch-As-Is Conversion rate per UNE Loop, Spreadsheet, (per DS1)			USL	URESP		26.37	4.99								
4-WIRE 19.2, 56 OR 64 KBPS DIGITAL GRADE LOOP																
	Switch-As-Is Conversion rate per UNE Loop, Single LSR, (per DS0)			UDL	URESL		24.88	3.51								
	Switch-As-Is Conversion rate per UNE Loop, Spreadsheet, (per DS0)			UDL	URESP		26.37	4.99								
UNE LOOP COMMINGLING																
2-WIRE ANALOG VOICE GRADE LOOP - COMMINGLING																
	2-Wire Analog Voice Grade Loop - Service Level 2 w/Loop or Ground Start Signaling - Zone 1		1	NTCVG	UEAL2	16.68	105.98	68.43	53.05	10.61						
	2-Wire Analog Voice Grade Loop - Service Level 2 w/Loop or Ground Start Signaling - Zone 2		2	NTCVG	UEAL2	23.13	105.98	68.43	53.05	10.61						
	2-Wire Analog Voice Grade Loop - Service Level 2 w/Loop or Ground Start Signaling - Zone 3		3	NTCVG	UEAL2	28.46	105.98	68.43	53.05	10.61						
	2-Wire Analog Voice Grade Loop - Service Level 2 w/Reverse Battery Signaling - Zone 1		1	NTCVG	UEAR2	16.68	105.98	68.43	53.05	10.61						
	2-Wire Analog Voice Grade Loop - Service Level 2 w/Reverse Battery Signaling - Zone 2		2	NTCVG	UEAR2	23.13	105.98	68.43	53.05	10.61						
	2-Wire Analog Voice Grade Loop - Service Level 2 w/Reverse Battery Signaling - Zone 3		3	NTCVG	UEAR2	28.46	105.98	68.43	53.05	10.61						
	Switch-As-Is Conversion rate per UNE Loop, Single LSR, (per DS0)			NTCVG	URESL		24.88	3.51								
	Switch-As-Is Conversion rate per UNE Loop, Spreadsheet, (per DS0)			NTCVG	URESP		26.37	4.99								
	CLEC to CLEC Conversion Charge without outside dispatch			NTCVG	UREWO		87.90	36.44								
	Loop Tagging - Service Level 2 (SL2)			NTCVG	URETL		11.24	1.10								
4-WIRE ANALOG VOICE GRADE LOOP																
	4-Wire Analog Voice Grade Loop - Zone 1		1	NTCVG	UEAL4	32.59	132.38	94.83	59.35	14.61						
	4-Wire Analog Voice Grade Loop - Zone 2		2	NTCVG	UEAL4	43.89	132.38	94.83	59.35	14.61						
	4-Wire Analog Voice Grade Loop - Zone 3		3	NTCVG	UEAL4	43.38	132.38	94.83	59.35	14.61						
	Switch-As-Is Conversion rate per UNE Loop, Single LSR, (per DS0)			NTCVG	URESL		24.88	3.51								
	Switch-As-Is Conversion rate per UNE Loop, Spreadsheet, (per DS0)			NTCVG	URESP		26.37	4.99								
	CLEC to CLEC Conversion Charge without outside dispatch			NTCVG	UREWO		87.90	36.44								
4-WIRE DS1 DIGITAL LOOP - COMMINGLING																
	4-Wire DS1 Digital Loop - Zone 1		1	NTCD1	USLXX	79.51	253.03	157.89	44.80	11.73						
	4-Wire DS1 Digital Loop - Zone 2		2	NTCD1	USLXX	136.00	253.03	157.89	44.80	11.73						
	4-Wire DS1 Digital Loop - Zone 3		3	NTCD1	USLXX	229.15	253.03	157.89	44.80	11.73						
	Switch-As-Is Conversion rate per UNE Loop, Single LSR, (per DS1)			NTCD1	URESL		24.88	3.51								
	Switch-As-Is Conversion rate per UNE Loop, Spreadsheet, (per DS1)			NTCD1	URESP		26.37	4.99								

UNBUNDLED NETWORK ELEMENTS - South Carolina														Attachment: 2 Exh A			
CATEGORY	RATE ELEMENTS	Interim	Zone	BCS	USOC	RATES($)					Svc Order Submitted Elec per LSR	Svc Order Submitted Manually per LSR	Incremental Charge - Manual Svc Order vs. Electronic-1st	Incremental Charge - Manual Svc Order vs. Electronic-Add'l	Incremental Charge - Manual Svc Order vs. Electronic-Disc 1st	Incremental Charge - Manual Svc Order vs. Electronic-Disc Add'l
							Nonrecurring		Nonrecurring Disconnect		OSS Rates($)					
						Rec	First	Add'l	First	Add'l	SOMEC	SOMAN	SOMAN	SOMAN	SOMAN	SOMAN
	CLEC to CLEC Conversion Charge without outside dispatch			NTCD1	UREWO		101.30	43.13								
4-WIRE 19.2, 56 OR 64 KBPS DIGITAL GRADE LOOP																
	4 Wire Unbundled Digital Loop 2.4 Kbps - Zone 1		1	NTCUD	UDL2X	29.93	126.66	89.12	59.35	14.61						
	4 Wire Unbundled Digital Loop 2.4 Kbps - Zone 2		2	NTCUD	UDL2X	33.99	126.66	89.12	59.35	14.61						
	4 Wire Unbundled Digital Loop 2.4 Kbps - Zone3		3	NTCUD	UDL2X	34.74	126.66	89.12	59.35	14.61						
	4 Wire Unbundled Digital Loop 4.8 Kbps -Zone 1		1	NTCUD	UDL4X	29.93	126.66	89.12	59.35	14.61						
	4 Wire Unbundled Digital Loop 4.8 Kbps - Zone 2		2	NTCUD	UDL4X	33.99	126.66	89.12	59.35	14.61						
	4 Wire Unbundled Digital Loop 4.8 Kbps - Zone 3		3	NTCUD	UDL4X	34.74	126.66	89.12	59.35	14.61						
	4 Wire Unbundled Digital Loop 9.6 Kbps - Zone 1		1	NTCUD	UDL9X	29.93	126.66	89.12	59.35	14.61						
	5 Wire Unbundled Digital Loop 9.6 Kbps - Zone 2		2	NTCUD	UDL9X	33.99	126.66	89.12	59.35	14.61						
	6 Wire Unbundled Digital Loop 9.6 Kbps - Zone 3		3	NTCUD	UDL9X	34.74	126.66	89.12	59.35	14.61						
	4 Wire Unbundled Digital 19.2 Kbps - Zone 1		1	NTCUD	UDL19	29.93	126.66	89.12	59.35	14.61						
	4 Wire Unbundled Digital 19.2 Kbps - Zone 2		2	NTCUD	UDL19	33.99	126.66	89.12	59.35	14.61						
	4 Wire Unbundled Digital 19.2 Kbps - Zone 3		3	NTCUD	UDL19	34.74	126.66	89.12	59.35	14.61						
	4 Wire Unbundled Digital Loop 56 Kbps - Zone 1		1	NTCUD	UDL56	29.93	126.66	89.12	59.35	14.61						
	4 Wire Unbundled Digital Loop 56 Kbps - Zone 2		2	NTCUD	UDL56	33.99	126.66	89.12	59.35	14.61						
	4 Wire Unbundled Digital Loop 56 Kbps - Zone 3		3	NTCUD	UDL56	34.74	126.66	89.12	59.35	14.61						
	4 Wire Unbundled Digital Loop 64 Kbps - Zone 1		1	NTCUD	UDL64	29.93	126.66	89.12	59.35	14.61						
	4 Wire Unbundled Digital Loop 64 Kbps - Zone 2		2	NTCUD	UDL64	33.99	126.66	89.12	59.35	14.61						
	4 Wire Unbundled Digital Loop 64 Kbps - Zone 3		3	NTCUD	UDL64	34.74	126.66	89.12	59.35	14.61						
	Switch-As-Is Conversion rate per UNE Loop, Single LSR, (per DS0)			NTCUD	URESL		24.88	3.51								
	Switch-As-Is Conversion rate per UNE Loop, Spreadsheet, (per DS0)			NTCUD	URESP		26.37	4.99								
	CLEC to CLEC Conversion Charge without outside dispatch			NTCUD	UREWO		102.34	49.85								
	Order Coordination for Specified Conversion Time (per LSR)			NTCVG, NTCUD, NTCD1	OCOSL		18.13									
LINE SPLITTING																
2-WIRE ANALOG VOICE GRADE LOOP																
	2 Wire Analog Voice Grade Loop-Service Level 1-Line Splitting-Zone 1		1	UEPSR UEPSB	UEALS	14.94	37.92	17.62	23.56	5.32						
	2 Wire Analog Voice Grade Loop-Service Level 1-Line Splitting-Zone 1		1	UEPSR UEPSB	UEABS	14.94	37.92	17.62	23.56	5.32						
	2 Wire Analog Voice Grade Loop- Service Level 1-Line Splitting-Zone 2		2	UEPSR UEPSB	UEALS	21.39	37.92	17.62	23.56	5.32						
	2 Wire Analog Voice Grade Loop- Service Level 1-Line Splitting-Zone 2		2	UEPSR UEPSB	UEABS	21.39	37.92	17.62	23.56	5.32						
	2 Wire Analog Voice Grade Loop-Service Level 1-Line Splitting-Zone 3		3	UEPSR UEPSB	UEALS	26.72	37.92	17.62	23.56	5.32						
	2 Wire Analog Voice Grade Loop-Service Level 1-Line Splitting-Zone 3		3	UEPSR UEPSB	UEABS	26.72	37.92	17.62	23.56	5.32						
ADDITIONAL NETWORK ELEMENTS																
	Wholesale to UNE, Switch-As-Is Conversion Charge			UNCVX, U1TVX, UNCDX, U1TDX, UNC1X, U1TD1,UNC3X, U1TD3, UNCSX, U1TS1, UDF,UDFCX	UNCCC		5.61	5.61								
	Unbundled Misc Rate Element, SNE SAI, Single Network Element - Switch As Is Non-recurring Charge, per circuit (LSR)	I		U1TVX, U1TDX, U1TD1, U1TD3, U1TS1, UDF, UE3	URESL		40.27	13.52								
	Unbundled Misc Rate Element, SNE SAI, Single Network Element - Switch As Is Non-recurring Charge, incremental charge per circuit on a spreadsheet	i		U1TVX, U1TDX, U1TD1, U1TD3, U1TS1, UDF, UE3	URESP		23.80	12.11								
COMMINGLING																

UNBUNDLED NETWORK ELEMENTS - South Carolina														Attachment: 2 Exh A			
CATEGORY		RATE ELEMENTS	Interim	Zone	BCS	USOC	RATES($)					Svc Order Submitted Elec per LSR	Svc Order Submitted Manually per LSR	Incremental Charge - Manual Svc Order vs. Electronic-1st	Incremental Charge - Manual Svc Order vs. Electronic-Add'l	Incremental Charge - Manual Svc Order vs. Electronic-Disc 1st	Incremental Charge - Manual Svc Order vs. Electronic-Disc Add'l
								Nonrecurring		Nonrecurring Disconnect		OSS Rates($)					
							Rec	First	Add'l	First	Add'l	SOMEC	SOMAN	SOMAN	SOMAN	SOMAN	SOMAN
		Commingling Authorization			UNCVX, UNCDX, UNC1X, UNC3X, UNCSX, U1TD1, U1TD3, U1TS1, UE3, UDLSX, U1TVX, U1TDX, U1TUB, ULDVX, ULDD1, ULDD3, ULDS1	CMGAU	0.00	0.00	0.00	0.00	0.00						
	Commingled (UNE part of single bandwidth circuit)																
		Commingled VG COCI			XDV2X, NTCVG	1D1VG	0.56	6.59	4.73								
		Commingled Digital COCI			XDV6X, NTCUD	1D1DD	1.19	6.59	4.73								
		Commingled ISDN COCI			XDD4X	UC1CA	2.56	6.59	4.73								
		Commingled 2-wire VG Interoffice Channel Facility Termination			XDV2X	U1TV2	24.30	40.63	27.47	16.77	6.91						
		Commingled 4-wire VG Interoffice Channel Facility Termination			XDV6X	U1TV4	21.29	40.63	27.47	16.77	6.91						
		Commingled 56kbps Interoffice Channel Facility Termination			XDD4X	U1TD5	16.76	40.63	27.47	16.77	6.91						
		Commingled 64kbps Interoffice Channel Facility Termination			XDD4X	U1TD6	16.76	40.63	27.47	16.77	6.91						
		Commingled VG/DS0 Interoffice Channel per mile			XDV2X, XDV6X, XDD4X	1L5XX	0.0167										
		Commingled 2-wire Local Loop Zone 1		1	XDV2X	UEAL2	16.68	105.98	68.43	53.05	10.61						
		Commingled 2-wire Local Loop Zone 2		2	XDV2X	UEAL2	23.13	105.98	68.43	53.05	10.61						
		Commingled 2-wire Local Loop Zone 3		3	XDV2X	UEAL2	28.46	105.98	68.43	53.05	10.61						
		Commingled 4-wire Local Loop Zone 1		1	XDV6X	UEAL4	32.59	132.38	94.83	59.35	14.61						
		Commingled 4-wire Local Loop Zone 2		2	XDV6X	UEAL4	43.89	132.38	94.83	59.35	14.61						
		Commingled 4-wire Local Loop Zone 3		3	XDV6X	UEAL4	43.38	132.38	94.83	59.35	14.61						
		Commingled 56kbps Local Loop Zone 1		1	XDD4X	UDL56	29.93	126.66	89.12	59.35	14.61						
		Commingled 56kbps Local Loop Zone 2		2	XDD4X	UDL56	33.99	126.66	89.12	59.35	14.61						
		Commingled 56kbps Local Loop Zone 3		3	XDD4X	UDL56	34.74	126.66	89.12	59.35	14.61						
		Commingled 64kbps Local Loop Zone 1		1	XDD4X	UDL64	29.93	126.66	89.12	59.35	14.61						
		Commingled 64kbps Local Loop Zone 2		2	XDD4X	UDL64	33.99	126.66	89.12	59.35	14.61						
		Commingled 64kbps Local Loop Zone 3		3	XDD4X	UDL64	34.74	126.66	89.12	59.35	14.61						
		Commingled ISDN Local Loop Zone 1		1	XDD4X	U1L2X	25.21	117.58	80.03	53.05	10.61						
		Commingled ISDN Local Loop Zone 2		2	XDD4X	U1L2X	32.76	117.58	80.03	53.05	10.61						
		Commingled ISDN Local Loop Zone 3		3	XDD4X	U1L2X	37.70	117.58	80.03	53.05	10.61						
		Commingled DS1 COCI			XDH1X, NTCD1	UC1D1	8.64	6.59	4.73								
		Commingled DS1 Interoffice Channel Facility Termination			XDH1X	U1TF1	77.14	89.47	81.99	16.39	14.48						
		Commingled DS1 Interoffice Channel per mile			XDH1X	1L5XX	0.3415										
		Commingled DS1/DS0 Channel System			XDH1X	MQ1	107.57	91.24	62.71	10.56	9.81						
		Commingled DS1 Local Loop Zone 1		1	XDH1X	USLXX	79.51	253.03	157.89	44.80	11.73						
		Commingled DS1 Local Loop Zone 2		2	XDH1X	USLXX	136.00	253.03	157.89	44.80	11.73						
		Commingled DS1 Local Loop Zone 3		3	XDH1X	USLXX	229.15	253.03	157.89	44.80	11.73						
		Commingled DS3 Local Loop Facility Termination			HFQC6	UE3PX	306.36	452.52	264.53	119.75	83.77						
		Commingled DS3/STS-1 Local Loop per mile			HFQC6, HFRST	1L5ND	12.26										
		Commingled STS-1 Local Loop Facility Termination			HFRST	UDLS1	313.49	452.52	264.53	119.75	83.77						
		Commingled DS3/DS1 Channel System			HFQC6	MQ3	144.02	178.54	94.18	33.33	31.90						
		Commingled DS3 Interoffice Channel Facility Termination			HFQC6	U1TF3	880.65	279.37	163.12	60.33	58.59						
		Commingled DS3 Interoffice Channel per mile			HFQC6	1L5XX	8.02										
		Commingled STS-1Interoffice Channel Facility Termination			HFRST	U1TFS	880.55	279.37	163.12	60.33	58.59						
		Commingled STS-1Interoffice Channel per mile			HFRST	1L5XX	8.02										
		Commingled Dark Fiber - Interoffice Transport, Per Four Fiber Strands, Per Route Mile Or Fraction Thereof			HEQDL	1L5DF	36.41										
		Commingled Dark Fiber - Interoffice Transport, Per Four Fiber Strands, Per Route Mile Or Fraction Thereof			HEQDL	UDF14		640.51	138.17	317.76	198.11						

Amendment to the Agreement
Between
DPI-Teleconnect, LLC
and
BellSouth Telecommunications, Inc.
Dated 4/19/2003

Pursuant to this Amendment, (the "Amendment"), DPI-Teleconnect, LLC (DPI-Teleconnect), and BellSouth Telecommunications, Inc. (BellSouth), hereinafter referred to collectively as the "Parties", hereby agree to amend that certain Interconnection Agreement between the Parties dated 4/19/2003 (Agreement).

WHEREAS, BellSouth and DPI-Teleconnect have entered into good faith negotiations pursuant to the Act to renegotiate an interconnection agreement (New Agreement) to replace the existing Agreement between the Parties, which expired on 4/18/2006; and

WHEREAS, the Parties desire to extend the term of the Agreement; and

WHEREAS, on March 1, 2006, the North Carolina Public Utilities Commission ("Commission") issued its Order in Docket No. P-55, Sub 1549 (Order), Proceeding to Consider Amendments to Interconnection Agreements Between BellSouth Telecommunications, Inc. and Competing Local Providers Due to Changes of Law.

WHEREAS, the Parties are obligated to amend the Agreement to bring it in compliance with the Commission's Order;

NOW, THEREFORE, in consideration of the mutual provisions contained herein and other good and valuable consideration, the receipt and sufficiency of which are hereby acknowledged, the Parties hereby covenant and agree as follows:

1. The Parties hereby agree to extend the term of the Agreement by ninety (90) days following the date of the last signature of this Amendment. Other than the modification of the expiration date as described in this Amendment, all provisions in Section 2 of the General Terms and Conditions of the Agreement relating to the term and termination of the Agreement remain in full force and effect.

2. The Parties hereby agree to incorporate into the Agreement the contract provisions set forth in Exhibit A hereto, and such contract provisions shall apply to services provided in the State of North Carolina only.

3. The Parties hereby agree to incorporate into the Agreement the rates set forth in Exhibit B hereto, and such rates shall apply to services provided in the State of North Carolina only.

4. To the extent that such contract provisions or rates as set forth in Exhibits A and B hereto conflict with any other rates, terms and conditions in the Agreement, the

contract provisions and rates in Exhibits A and B shall prevail in the State of North Carolina.

5. Further, to the extent that defined terms in this Amendment differ from defined terms in the Agreement, such defined terms in the Agreement shall be deemed to have the same meaning as the alternative defined terms in this Amendment to the extent necessary to give full effect to this Amendment consistent with the North Carolina Utilities Commission's Order.

6. This Amendment shall be approved on the date the North Carolina Public Utilities Commission issues an order approving the Amendment (Approved Date) and shall be deemed effective on March 11, 2006 (Effective Date).

7. All of the other provisions of the Agreement shall remain in full force and effect.

8. Either or both of the Parties is authorized to submit this Amendment to the respective state regulatory authorities for approval subject to Section 252(e) of the Federal Telecommunications Act of 1996.

IN WITNESS WHEREOF, the Parties have executed this Amendment the day and year written below.

BellSouth Telecommunications, Inc.	**DPI-Teleconnect, LLC**
By: Kristen E. Shore	By: David B. Dawant
Name: Kristen E. Shore	Name: DAVID B. DOWANT
Title: Director	Title: President + CEO
Date: 11/16/06	Date: 11/14/06

Version: NC COL Amendment
CLEC with CA & Amended IA
03/09/06

<u>Issue 1</u> – What is the appropriate language to implement the FCC's transition plan for: (1) switching; (2) high-capacity loops; and (3) dedicated transport as detailed in the FCC's TRRO, issued February 4, 2005?

1. 4-wire Unbundled DS1 Digital Loop

1.1 This is a designed 4-wire Loop that is provisioned according to industry standards for DS1 or Primary Rate ISDN services and will come standard with a test point, OC, and a DLR. A DS1 Loop may be provisioned over a variety of loop transmission technologies including copper, HDSL-based technology or fiber optic transport systems. It will include a 4-wire DS1 Network Interface at the End User's location.

1.2 <u>DS3 Loop.</u> DS3 Loop is a two-point digital transmission path which provides for simultaneous two-way transmission of serial, bipolar, return-to-zero isochronous digital electrical signals at a transmission rate of forty-four point seven thirty-six (44.736) megabits per second (Mbps) that is dedicated to the use of the ordering CLEC in its provisioning of local exchange and associated exchange access services. It may provide transport for twenty-eight (28) DS1 channels, each of which provides the digital equivalent of twenty-four (24) analog voice grade channels. The interface to unbundled dedicated DS3 transport is a metallic-based electrical interface.

2. Transition for DS1 and DS3 Loops

2.1 For purposes of this Section 2, the Transition Period for the Embedded Base of DS1 and DS3 Loops and for the Excess DS1 and DS3 Loops (defined in 2.3) is the twelve (12) month period beginning March 11, 2005 and ending March 10, 2006.

2.2 For purposes of this Section 2, Embedded Base means DS1 and DS3 Loops that were in service for DPI-Teleconnect as of March 10, 2005 in those wire centers that, as of such date, met the criteria set forth in Sections 2.6.1 or 2.6.2 below. Subsequent disconnects or loss of End Users shall be removed from the Embedded Base.

2.3 Excess DS1 and DS3 Loops are those DPI-Teleconnect DS1 and DS3 Loops in service as of March 10, 2005, in excess of the caps set forth in Section 2.4 below, respectively. Subsequent disconnects or loss of End Users shall be removed from Excess DS1 and DS3 Loops.

2.4 BellSouth shall not provide more than ten (10) unbundled DS1 Loops to DPI-Teleconnect at any single building in which DS1 Loops are available as unbundled loops. DPI-Teleconnect may obtain a maximum of a single Unbundled DS3 loop to any single building in which DS3 Loops are available as Unbundled Loops.

2.5 For purposes of this Section 2, a Business Line is defined in 47 C.F.R. § 51.5.

2.6 Notwithstanding anything to the contrary in this Agreement, and except as set forth in Section 11 below, BellSouth shall make available DS1 and DS3 Loops as described in this Section 2.6 only for DPI-Teleconnect's Embedded Base during the Transition Period:

2.6.1 DS1 Loops at any location within the service area of a wire center containing 60,000 or more Business Lines and four (4) or more fiber-based collocators.

2.6.2 DS3 Loops at any location within the service area of a wire center containing 38,000 or more Business Lines and four (4) or more fiber-based collocators.

2.7 A list of wire centers meeting the criteria set forth in Sections 2.6.1 and 2.6.2 above as ordered by the North Carolina Utilities Commission in Docket No. P-55, Sub 1549 (Initial Wire Center List), is attached to BellSouth's Carrier Notification Letter SNxxxxx, dated xxx, which is available on BellSouth's Interconnection Services Web site.

2.8 Transition Period Pricing. From March 11, 2005, through the completion of the Transition Period, BellSouth shall charge a rate for DPI-Teleconnect's Embedded Base and DPI-Teleconnect's Excess DS1 and DS3 Loops equal to the higher of:

2.8.1 115% of the rate paid for that element on June 15, 2004; or

2.8.2 115% of a new rate the Commission establishes, if any, between June 16, 2004 and March 11, 2005.

2.8.3 These rates shall be as set forth in Exhibit A to Attachment 2 of the Agreement and this Section 2.8.

2.9 The Transition Period shall apply only to (1) DPI-Teleconnect's Embedded Base and (2) DPI-Teleconnect's Excess DS1 and DS3 Loops. DPI-Teleconnect shall not add new DS1 or DS3 loops as described in this Section 2.9 pursuant to this Agreement, except pursuant to the self-certification process as set forth in Section 6 of this Attachment and as set forth in Section 11 below.

2.10 Once a wire center exceeds both of the thresholds set forth in Section 2.6.1 above, no future DS1 Loop unbundling will be required in that wire center.

2.11 Once a wire center exceeds both of the thresholds set forth in Section 2.6.1 above, no future DS3 Loop unbundling will be required in that wire center.

2.12 No later than March 10, 2006 or by other mutually agreed upon date DPI-Teleconnect shall submit spreadsheet(s) identifying all of the Embedded Base of circuits and Excess DS1 and DS3 Loops to be either disconnected or converted to other BellSouth services pursuant to Section 20.1 below. The Parties shall negotiate a project schedule for the Conversion of the Embedded Base and Excess DS1 and DS3 Loops.

2.13 If DPI-Teleconnect fails to submit the spreadsheet(s) specified in Section 2.12 above for all of its Embedded Base and Excess DS1 and DS3 Loops prior to March 10, 2006 or by other mutually agreed upon date, BellSouth will identify DPI-Teleconnect's remaining Embedded Base and Excess DS1 and DS3 Loops, if any, and will transition such circuits to the equivalent tariffed BellSouth service(s) effective March 11, 2006. Those circuits identified and transitioned by BellSouth pursuant to this Section 2.13 shall be subject to all applicable disconnect charges as set forth in this Agreement and the full nonrecurring charges for installation of the equivalent tariffed BellSouth service as set forth in BellSouth's tariffs.

2.14 For Embedded Base circuits and Excess DS1 and DS3 Loops converted pursuant to Section 2.12 above or transitioned pursuant to Section 2.13 above, the applicable recurring tariff charge shall apply to each circuit as of March 11, 2006.

2.15 To the extent that DPI-Teleconnect no longer desires to provide a particular service, it must notify BellSouth of its intent to discontinue and the parties must coordinate the disconnect to take place prior the conclusion of the applicable transition period. DPI-Teleconnect must also adhere to Commission Rule R17-2(q) regarding the discontinuance of service to customers.

3. Dark Fiber Loop

3.1 Dark Fiber Loop is an unused optical transmission facility, without attached signal regeneration, multiplexing, aggregation or other electronics, from the demarcation point at an End User's premises to the End User's serving wire center. Dark Fiber Loops may be strands of optical fiber existing in aerial or underground structure. BellSouth will not provide line terminating elements, regeneration or other electronics necessary for DPI-Teleconnect to utilize Dark Fiber Loops.

3.2 Transition for Dark Fiber Loop

3.2.1 For purposes of this Section 3, the Transition Period for Dark Fiber Loops is the eighteen (18) month period beginning March 11, 2005 and ending September 10, 2006.

3.2.2 For purposes of this Section 3, Embedded Base means Dark Fiber Loops that were in service for DPI-Teleconnect as of March 10, 2005. Subsequent disconnects or loss of End Users shall be removed from the Embedded Base.

3.2.3 During the Transition Period only, BellSouth shall make available for the Embedded Base Dark Fiber Loops for DPI-Teleconnect at the terms and conditions set forth in this Attachment.

3.2.4 Transition Period Pricing. From March 11, 2005, through the completion of the Transition Period, BellSouth shall charge a rate for DPI-Teleconnect's Embedded Base of Dark Fiber Loops equal to the higher of:

3.2.4.1 115% of the rate paid for that element on June 15, 2004; or

3.2.4.2 115% of a new rate the Commission establishes, if any, between June 16, 2004 and March 11, 2005.

3.2.4.3 These rates shall be as set forth in Exhibit A to Attachment 2 of the Agreement and this Section 3.2.4.

3.2.5 The Transition Period shall apply only to DPI-Teleconnect's Embedded Base and DPI-Teleconnect shall not add new Dark Fiber Loops pursuant to this Agreement.

3.2.6 Effective September 11, 2006, Dark Fiber Loops will no longer be made available pursuant to this Agreement.

3.2.7 No later than June 10, 2006 DPI-Teleconnect shall submit spreadsheet(s) identifying all of the Embedded Base of circuits to be either disconnected or converted to other BellSouth services as Conversions pursuant to Section 20.1 below. The Parties shall negotiate a project schedule for the Conversion of the Embedded Base.

3.2.8 If DPI-Teleconnect fails to submit the spreadsheet(s) specified in Section 3.2.7 above for all of its Embedded Base prior to June 10, 2006, BellSouth

will identify DPI-Teleconnect's remaining Embedded Base, if any, and will transition such circuits to the equivalent tariffed BellSouth service(s) effective September 10, 2006. Those circuits identified and transitioned by BellSouth pursuant to this Section 3.2.8 shall be subject to all applicable disconnect charges as set forth in this Agreement and the full nonrecurring charges for installation of the equivalent tariffed BellSouth service as set forth in BellSouth's tariffs.

3.2.9 For Embedded Base circuits converted pursuant to Section 3.2.7 above or transitioned pursuant to Section 3.2.8 above, the applicable recurring tariff charge shall apply to each circuit as of September 11, 2006.

3.2.10 To the extent that DPI-Teleconnect no longer desires to provide a particular service, it must notify BellSouth of its intent to discontinue and the parties must coordinate the disconnect to take place prior the conclusion of the applicable transition period. DPI-Teleconnect must also adhere to Commission Rule R17-2(q) regarding the discontinuance of service to customers.

4. Dedicated Transport and Dark Fiber Transport

4.1 **Dedicated Transport.** Dedicated Transport is defined as BellSouth's transmission facilities between wire centers or switches owned by BellSouth, or between wire centers or switches owned by BellSouth and switches owned by DPI-Teleconnect, including but not limited to DS1, DS3 and OCn level services, as well as dark fiber, dedicated to DPI-Teleconnect. BellSouth shall not be required to provide access to OCn level Dedicated Transport under any circumstances pursuant to this Agreement. In addition, except as set forth in Section 4.2 below, BellSouth shall not be required to provide to DPI-Teleconnect unbundled access to interoffice transmission facilities that do not connect a pair of wire centers or switches owned by BellSouth ("Entrance Facilities").

4.2 **Transition for DS1 and DS3 Dedicated Transport Including DS1 and DS3 Entrance Facilities**

4.2.1 For purposes of this Section 4.2, the Transition Period for the Embedded Base of DS1 and DS3 Dedicated Transport, Embedded Base Entrance Facilities and for Excess DS1 and DS3 Dedicated Transport, is the twelve (12) month period beginning March 11, 2005 and ending March 10, 2006.

4.2.2 For purposes of this Section 4.2, Embedded Base means DS1 and DS3 Dedicated Transport that were in service for DPI-Teleconnect as of March 10, 2005 in those wire centers that, as of such date, met the criteria set forth in Sections 4.2.7.1 or 4.2.7.2 below. Subsequent disconnects or loss of End Users shall be removed from the Embedded Base.

4.2.3 For purposes of this Section 4.2, Embedded Base Entrance Facilities means Entrance Facilities that were in service for DPI-Teleconnect as of March 10, 2005. Subsequent disconnects or loss of customers shall be removed from the Embedded Base.

4.2.4 DPI-Teleconnect may obtain a maximum of twelve (12) unbundled DS3 Dedicated Transport circuits on each route where DS3 Dedicated Transport is available as a Network Element, and a maximum of ten (10) unbundled DS1 Dedicated Transport circuits on each Route where there is no 251(c)(3) unbundling obligation for DS3 Dedicated Transport but for which impairment exists for DS1 Dedicated Transport.

4.2.5 For purposes of this Section 4.2, Excess DS1 and DS3 Dedicated Transport means those DPI-Teleconnect DS1 and DS3 Dedicated Transport facilities in service as of March 10, 2005, in excess of the caps set forth in Section 4.2.4 above. Subsequent disconnects and loss of End Users shall be removed from Excess DS1 and DS3 Loops.

4.2.6 For purposes of this Section 4.2, a Business Line is as defined in 47 C.F.R. § 51.5.

4.2.7 Notwithstanding anything to the contrary in this Agreement, BellSouth shall make available Dedicated Transport as described in this Section 4.2 only for DPI-Teleconnect's Embedded Base during the Transition Period:

4.2.7.1 DS1 Dedicated Transport where both wire centers at the end points of the route contain 38,000 or more Business Lines or four (4) or more fiber-based collocators.

4.2.7.2 DS3 Dedicated Transport where both wire centers at the end points of the route contain 24,000 or more Business Lines or three (3) or more fiber-based collocators.

4.2.7.3 A list of wire centers meeting the criteria set forth in Sections 4.2.7.1 or 4.2.7.2 above as ordered by the North Carolina Utilities Commission in Docket No. P-55, Sub 1549 (Initial Wire Center List), is attached to BellSouth's Carrier Notification Letter SNxxxxx, dated xx, which is available on BellSouth's Interconnection Services Web site,

4.2.8 Notwithstanding anything to the contrary in this Agreement, BellSouth shall make available Entrance Facilities only for <DPI-Teleconnect's Embedded Base Entrance Facilities and only during the Transition Period.

4.2.9 Transition Period Pricing. From March 11, 2005, through the completion of the Transition Period, BellSouth shall charge a rate for DPI-Teleconnect's Embedded Base of DS1 and DS3 Dedicated Transport and for DPI-Teleconnect's Excess DS1 and DS3 Dedicated Transport, as described in this Section 4.2, equal to the higher of:

4.2.9.1 115% of the rate paid for that element on June 15, 2004; or

4.2.9.2 115% of a new rate the Commission establishes, if any, between June 16, 2004 and March 11, 2005.

4.2.9.3 These rates shall be as set forth in Exhibit A to Attachment 2 of the Agreement and this Section 4.2.9.

4.2.9.4 From March 11, 2005, through the completion of the Transition Period, BellSouth shall charge a rate for DPI-Teleconnect's Embedded Base Entrance Facilities as set forth in Exhibit A to Attachment 2 of the Agreement and this Section 4.2.9.

4.2.10 The Transition Period shall apply only to (1) DPI-Teleconnect's Embedded Base and Embedded Base Entrance Facilities; and (2) DPI-Teleconnect's Excess DS1 and DS3 Dedicated Transport. DPI-Teleconnect shall not add new Entrance Facilities pursuant to this Agreement. Further, DPI-Teleconnect shall not add new DS1 or DS3 Dedicated Transport as described in this Section 4.2 pursuant to this

Agreement, except pursuant to the self-certification process as set forth in Section 6 of this Attachment and as set forth in Section 12 below.

4.2.11 Once a wire center exceeds either of the thresholds set forth in this Section 4.2.7.1 above, no future DS1 Dedicated Transport unbundling will be required in that wire center.

4.2.12 Once a wire center exceeds either of the thresholds set forth in Section 4.2.7.2 above, no future DS3 Dedicated Transport will be required in that wire center.

4.2.13 No later than March 10, 2005 or by other mutually agreed upon date DPI-Teleconnect shall submit spreadsheet(s) identifying all of the Embedded Base of circuits, Embedded Base Entrance Facilities, and Excess DS1 and DS3 Dedicated Transport to be either disconnected or converted to other BellSouth services pursuant to Section 20.1 below. The Parties shall negotiate a project schedule for the Conversion of the Embedded Base, Embedded Base Entrance Facilities and Excess DS1 and DS3 Dedicated Transport.

4.2.14 If DPI-Teleconnect fails to submit the spreadsheet(s) specified in Section 4.2.13 above for all of its Embedded Base, Embedded Base Entrance Facilities and Excess DS1 and DS3 Dedicated Transport prior to March 10, 2006 or by other mutually agreed upon date, BellSouth will identify DPI-Teleconnect's remaining Embedded Base, Embedded Base Entrance Facilities and Excess DS1 and DS3 Dedicated Transport, if any, and will transition such circuits to the equivalent tariffed BellSouth service(s) effective March 11, 2006. Those circuits identified and transitioned by BellSouth pursuant to this Section 4.2.14 shall be subject to all applicable disconnect charges as set forth in this Agreement and the full nonrecurring charges for installation of the equivalent tariffed BellSouth service as set forth in BellSouth's tariffs.

4.2.15 For Embedded Base circuits, Embedded Base Entrance Facilities and Excess DS1 and DS3 Dedicated Transport converted pursuant to Section 4.2.13 or transitioned pursuant to Section 4.2.14 above, the applicable recurring tariff charge shall apply to each circuit as of March 11, 2006.

4.2.16 To the extent that DPI-Teleconnect no longer desires to provide a particular service, it must notify BellSouth of its intent to discontinue and the parties must coordinate the disconnect to take place prior the conclusion of the applicable transition period. DPI-Teleconnect must also adhere to Commission Rule R17-2(q) regarding the discontinuance of service to customers.

5. **Dark Fiber Transport.** Dark Fiber Transport is defined as Dedicated Transport that consists of unactivated optical interoffice transmission facilities without attached signal regeneration, multiplexing, aggregation or other electronics. Except as set forth in Section 5.1 below, BellSouth shall not be required to provide access to Dark Fiber Transport Entrance Facilities pursuant to this Agreement.

5.1 **Transition for Dark Fiber Transport and Dark Fiber Transport Entrance Facilities**

5.1.1 For purposes of this Section 5, the Transition Period for the Embedded Base of Dark Fiber Transport is the eighteen (18) month period beginning March 11, 2005 and ending September 10, 2006.

5.1.2 For purposes of this Section 5, Embedded Base means Dark Fiber Transport that was in service for DPI-Teleconnect as of March 10, 2005 in those wire centers that, as of such date, met the criteria set forth in 5.1.4.1. Subsequent disconnects or loss of End Users shall be removed from the Embedded Base.

5.1.3 For purposes of this Section 5.1, a Business Line is as defined in 47 C.F.R. § 51.5.

5.1.4 Notwithstanding anything to the contrary in this Agreement, BellSouth shall make available Dark Fiber Transport as described in this Section 5.1 only for DPI-Teleconnect's Embedded Base during the Transition Period:

5.1.4.1 Dark Fiber Transport where both wire centers at the end points of the route contain twenty-four thousand (24,000) or more Business Lines or three (3) or more fiber-based collocators.

5.1.5 A list of wire centers meeting the criteria set forth in Section 5.1.4 above as ordered by the North Carolina Utilities Commission in Docket No. P-55, Sub 1549, ("Initial List") is attached to BellSouth's Carrier Notification Letter SNxxxxxx, dated xx, which is available on BellSouth's Interconnection Services Web site.

5.1.6 Transition Period Pricing. From March 11, 2005, through the completion of the Transition Period, BellSouth shall charge a rate for DPI-Teleconnect's Embedded Base and Excess of Dark Fiber Transport and Embedded Base Dark Fiber Transport Entrance Facilities shall be equal to the higher of:

5.1.6.1 115% of the rate paid for that element on June 15, 2004; or

5.1.6.2 115% of a new rate the Commission establishes, if any, between June 16, 2004 and March 11, 2005.

5.1.6.3 These rates shall be as set forth in Exhibit A Attachment 2 of the Agreement and this Section 5.1.6.

5.1.7 The Transition Period shall apply only to DPI-Teleconnect's Embedded Base of Dark Fiber Transport and Dark Fiber Entrance Facilities. DPI-Teleconnect shall not add new Dark Fiber Transport as described in this Section 5.1 except pursuant to the self-certification process as set forth in Section 6 of this Attachment and as set forth in Section 13 below. Further, DPI-Teleconnect shall not add new Dark Fiber Entrance Facilities pursuant to this Agreement.

5.1.8 Once a wire center exceeds either of the thresholds set forth in this Section 5.1.4 above, no future Dark Fiber Transport unbundling will be required in that wire center.

5.1.9 No later than June 10, 2006 DPI-Teleconnect shall submit spreadsheet(s) identifying all of the Embedded Base of Dark Fiber Transport and Dark Fiber Entrance Facilities to be either disconnected or converted to other BellSouth services as Conversions pursuant to Section 20.1 below. The Parties shall negotiate a project schedule for the Conversion of the Embedded Base.

5.1.10 If DPI-Teleconnect fails to submit the spreadsheet(s) specified in Section 5.1.9 above for all of its Embedded Base prior to June 10, 2006, BellSouth will identify DPI-Teleconnect's remaining Embedded Base, if any, and will transition such circuits to the equivalent tariffed BellSouth service(s) effective September 10, 2006. Those circuits identified and transitioned by BellSouth pursuant to this Section 5.1.10 shall be subject to all applicable disconnect charges as set forth in this Agreement and the full nonrecurring charges for installation of the equivalent tariffed BellSouth service as set forth in BellSouth's tariffs.

5.1.11 For Embedded Base circuits converted pursuant to Section 5.1.9 above or transitioned pursuant to Section 5.1.10 above, the applicable recurring tariff charge shall apply to each circuit as of September 11, 2006.

5.1.12 To the extent that DPI-Teleconnect no longer desires to provide a particular service, it must notify BellSouth of its intent to discontinue and the parties must coordinate the disconnect to take place prior the conclusion of the applicable transition period. DPI-Teleconnect must also adhere to Commission Rule R17-2(q) regarding the discontinuance of service to customers.

6. Prior to submitting an order pursuant to this Agreement for high capacity (DS1 or above) Dedicated Transport or high capacity Loops, DPI-Teleconnect shall undertake a reasonably diligent inquiry to determine whether DPI-Teleconnect is entitled to unbundled access to such Network Elements in accordance with the terms of this Agreement. By submitting any such order, DPI-Teleconnect self-certifies that to the best of DPI-Teleconnect's knowledge, the high capacity Dedicated Transport or high capacity Loop requested is available as a Network Element pursuant to this Agreement. Upon receiving such order, BellSouth shall process the request in reliance upon DPI-Teleconnect's self-certification. To the extent BellSouth believes that such request does not comply with the terms of this Agreement, BellSouth shall seek dispute resolution in accordance with the General Terms and Conditions of this Agreement. If BellSouth prevails in such dispute resolution proceeding, DPI-Teleconnect shall be liable to BellSouth for the difference between the rate for the equivalent BellSouth alternative arrangement and the self certified UNE, plus interest, on such rate differential.

Issue 3 –What is the appropriate language to implement BellSouth's obligation to provide Section 251 unbundled access to high-capacity loops and dedicated

transport and how should the following terms be defined? (i) Business Line; (ii) Fiber-Based Collocator; (iii) Building (iv) Route?

7. A Business Line is defined in 47 CFR § 51.5.

8. A Fiber-Based Collocator is defined in 47 CFR § 51.5.

9. A Building is defined as a permanent physical structure including, but not limited to, a structure in which people reside, or conduct business or work on a daily basis and through which there is one centralized point of entry in the structure through which all telecommunications services must transit. As an example only, a high rise office building with a general telecommunications equipment room through which all telecommunications services to that building's tenants must pass would be a single "building for purposes of this Attachment 2. Two or more physical areas served by a individual points of entry through which telecommunications services must transit will be considered separate buildings. For instance, a strip mall with individual businesses obtaining telecommunications services from different access points on the building(s) will be considered individual buildings, even though they might share common walls.

10. A route is defined as a transmission path between one of BellSouth's wire centers or switches. Transmission paths between identical end points are the same "route", irrespective of whether they pass through the same intermediate wire centers or switches, if any. For the purposes of determining routes wire centers include non-BellSouth locations where BellSouth has reverse collocated switches with line side functionality that terminate loops.

<u>Issue 6 –</u> What language should be included in agreements to reflect the procedures identified in Matrix Item No. 5(b)?

11. <u>Modifications and Updates to the Wire Center List and Subsequent Transition Periods for DS1 and/or DS3 Loops</u>

11.1 In the event BellSouth identifies additional wire centers that meet the criteria set forth in Section 2.6 above, but that were not included in the Initial Wire Center List, BellSouth shall include such additional wire centers in a carrier notification letter (CNL). Each such list of additional wire centers shall be considered a "Subsequent Wire Center List".

11.2 Effective thirty (30) business days after the date of a BellSouth CNL providing a Subsequent Wire Center List, BellSouth shall not be required to unbundle DS1 and/or DS3 Loops, as applicable, in such additional wire center(s).

11.3 For purposes of this Section 11, BellSouth shall make available DS1 and DS3 Loops that were in service for DPI-Teleconnect in a wire center on the Subsequent Wire Center List as of the thirtieth (30th) business day after the date of BellSouth's CNL identifying the Subsequent Wire Center List (Subsequent Embedded Base) until one hundred and fifty (150) days after the thirtieth business day from the date of BellSouth's CNL identifying the Subsequent Wire Center List (Subsequent Transition Period).

11.4 Subsequent disconnects or loss of End Users shall be removed from the Subsequent Embedded Base.

11.5 The rates set forth in Exhibit A Attachment 2 of the Agreement plus 15% shall apply to the Subsequent Embedded Base during the Subsequent Transition Period.

11.6 No later than forty (40) days from BellSouth's CNL identifying the Subsequent Wire Center List, DPI-Teleconnect shall submit a spreadsheet(s) identifying the Subsequent Embedded Base of circuits to be disconnected or converted to other BellSouth services. The Parties shall negotiate a project schedule for the Conversion of the Subsequent Embedded Base.

11.7 If DPI-Teleconnect fails to submit the spreadsheet(s) specified in Section 11.6 above for all of its Subsequent Embedded Base within forty (40) days after the date of BellSouth's CNL identifying the Subsequent Wire Center List, BellSouth will identify DPI-Teleconnect's remaining Subsequent Embedded Base, if any, and will transition such circuits to the equivalent tariffed BellSouth service(s). Those circuits identified and transitioned by BellSouth shall be subject to the applicable disconnect charges as set forth in this Agreement and the full nonrecurring charges for installation of the equivalent tariffed BellSouth service as set forth in BellSouth's tariffs

11.8 For Subsequent Embedded Base circuits converted pursuant to Section 11.6 above or transitioned pursuant to Section 11.7 above, the applicable recurring

tariff charges shall apply as of the earlier of the date each circuit is converted or transitioned, as applicable, or the first day after the end of the Subsequent Transition Period.

11.9 Where facilities are available, BellSouth will install Loops in compliance with BellSouth's Products and Services Interval Guide available at BellSouth's Web site. For orders of fifteen (15) or more Loops, the installation and any applicable Order Coordination as described below will be handled on a project basis, and the intervals will be set by the BellSouth project manager for that order. When Loops require a Service Inquiry (SI) prior to issuing the order to determine if facilities are available, the interval for the SI process is separate from the installation interval.

11.10 In the event that (1) BellSouth designates a wire center as non-impaired, (2) DPI-Teleconnect converts existing UNEs to other services or orders new services as services other than UNEs, (3) DPI-Teleconnect otherwise would have been entitled to UNEs in such wire center at the time alternative services provisioned, and (4) BellSouth acknowledges or a state or federal agency regulatory body with authority determines that, at the time BellSouth designated such wire center as non-impaired, such wire center did not meet the FCC's non-impairment criteria, then upon request of DPI-Teleconnect, BellSouth shall transition to UNEs any alternative services in such wire center that were established after such wire center was designated as non-impaired. In such instances, BellSouth shall refund DPI-Teleconnect the difference between the rate paid by DPI-Teleconnect for such services and the applicable UNE rate, including but not limited to any charges associated with the unnecessary conversion from UNE to other wholesale services.

12. Modifications and Updates to the Wire Center List and Subsequent Transition Periods for DS1 and/or DS3 Transport

12.1 In the event BellSouth identifies additional wire centers that meet the criteria set forth in Sections 4.2.11 or 4.2.12 above, but that were not included in the Initial Wire Center List, BellSouth shall include such additional wire centers in CNL. Each such list of additional wire centers shall be considered a Subsequent Wire Center List.

12.2 Effective thirty (30) business days after the date of a BellSouth CNL providing a Subsequent Wire Center List, BellSouth shall not be required to provide DS1 and DS3 Dedicated Transport, as applicable, in such additional wire center(s).

12.3 For purposes of this Section 12, BellSouth shall make available DS1 and DS3 Dedicated Transport that was in service for DPI-Teleconnect in a wire center on the Subsequent Wire Center List as of the thirtieth (30th) business day after the date of BellSouth's CNL identifying the Subsequent Wire Center List (Subsequent Embedded Base) until one hundred and fifty (150) days after the

thirtieth (30th) business day from the date of BellSouth's CNL identifying the Subsequent Wire Center List (Subsequent Transition Period).

12.4 Subsequent disconnects or loss of End Users shall be removed from the Subsequent Embedded Base.

12.5 The rates set forth in Exhibit A Attachment 2 of the Agreement plus 15% shall apply to the Subsequent Embedded Base during the Subsequent Transition Period.

12.6 No later than forty (40) days from BellSouth's CNL identifying the Subsequent Wire Center List DPI-Teleconnect shall submit a spreadsheet(s) identifying the Subsequent Embedded Base of circuits to be disconnected or converted to other BellSouth services. The Parties shall negotiate a project schedule for the Conversion of the Subsequent Embedded Base.

12.7 If DPI-Teleconnect fails to submit the spreadsheet(s) specified in Section 12.6 above for all of its Subsequent Embedded Base within forty (40) days after the date of BellSouth's CNL identifying the Subsequent Wire Center List, BellSouth will identify DPI-Teleconnect's remaining Subsequent Embedded Base, if any, and will transition such circuits to the equivalent tariffed BellSouth service(s). Those circuits identified and transitioned by BellSouth shall be subject to the applicable disconnect charges as set forth in this Agreement and the full nonrecurring charges for installation of the equivalent tariffed BellSouth service as set forth in BellSouth's tariffs.

12.8 For Subsequent Embedded Base circuits converted pursuant to Section 12.6 above or transitioned pursuant to Section 12.7 above, the applicable recurring tariff charges shall apply as of the earlier of the date each circuit is converted or transitioned, as applicable, or the first day after the end of the Subsequent Transition Period.

12.9 In the event that (1) BellSouth designates a wire center as non-impaired, (2) DPI-Teleconnect converts existing UNEs to other services or orders new services as services other than UNEs, (3) DPI-Teleconnect otherwise would have been entitled to UNEs in such wire center at the time alternative services provisioned, and (4) BellSouth acknowledges or a state or federal agency regulatory body with authority determines that, at the time BellSouth designated such wire center as non-impaired, such wire center did not meet the FCC's non-impairment criteria, then upon request of DPI-Teleconnect, BellSouth shall transition to UNEs any alternative services in such wire center that were established after such wire center was designated as non-impaired. In such instances, BellSouth shall refund DPI-Teleconnect the difference between the rate paid by DPI-Teleconnect for such services and the applicable UNE rate, including but not limited to any charges associated with the unnecessary conversion from UNE to other wholesale services.

13. <u>Modifications and Updates to the Wire Center List and Subsequent Transition Periods for Dark Fiber Transport</u>

13.1 In the event BellSouth identifies additional wire centers that meet the criteria set forth in Section 5 above, but that were not included in the Initial Wire Center List, BellSouth shall include such additional wire centers in a CNL. Each such list of additional wire centers shall be considered a "Subsequent Wire Center List".

13.2 Effective thirty (30) business days after the date of a BellSouth CNL providing a Subsequent Wire Center List, BellSouth shall not be required to provide unbundled access to Dark Fiber Transport, as applicable, in such additional wire center(s), except pursuant to the self-certification process as set forth in Section 6 above.

13.3 For purposes of this Section 13, BellSouth shall make available DS1 and DS3 Loops that were in service for DPI-Teleconnect in a wire center on the Subsequent Wire Center List as of the thirtieth (30th) business day after the date of BellSouth's CNL identifying the Subsequent Wire Center List (Subsequent Embedded Base) until one hundred and fifty (150) days after the thirtieth (30th) business day from the date of BellSouth's CNL identifying the Subsequent Wire Center List (Subsequent Transition Period).

13.4 Subsequent disconnects or loss of End Users shall be removed from the Subsequent Embedded Base.

13.5 The rates set forth in Exhibit A Attachment 2 of the Agreement plus 15% shall apply to the Subsequent Embedded Base during the Subsequent Transition Period.

13.6 No later than forty (40) days from BellSouth's CNL identifying the Subsequent Wire Center List DPI-Teleconnect shall submit a spreadsheet(s) identifying the Subsequent Embedded Base of circuits to be disconnected or converted to other BellSouth services. The Parties shall negotiate a project schedule for the Conversion of the Subsequent Embedded Base.

13.7 If DPI-Teleconnect fails to submit the spreadsheet(s) specified in Section 13.6 above for all of its Subsequent Embedded Base within forty (40) days after the date of BellSouth's CNL identifying the Subsequent Wire Center List, BellSouth will identify DPI-Teleconnect's remaining Subsequent Embedded Base, if any, and will transition such circuits to the equivalent tariffed BellSouth service(s). Those circuits identified and transitioned by BellSouth shall be subject to the applicable disconnect charges as set forth in this Agreement and the full nonrecurring charges for installation of the equivalent tariffed BellSouth service as set forth in BellSouth's tariffs.

13.8 For Subsequent Embedded Base circuits converted pursuant to Section 13.6 above or transitioned pursuant to Section 13.7 above, the applicable recurring tariff charges shall apply as of the earlier of the date each circuit is converted or transitioned, as applicable, or the first day after the end of the Subsequent Transition Period.

13.9 In the event that (1) BellSouth designates a wire center as non-impaired, (2) DPI-Teleconnect converts existing UNEs to other services or orders new services as services other than UNEs, (3) DPI-Teleconnect otherwise would have been entitled to UNEs in such wire center at the time alternative services provisioned, and (4) BellSouth acknowledges or a state or federal agency regulatory body with authority determines that, at the time BellSouth designated such wire center as non-impaired, such wire center did not meet the FCC's non-impairment criteria, then upon request of DPI-Teleconnect, BellSouth shall transition to UNEs any alternative services in such wire center that were established after such wire center was designated as non-impaired. In such instances, BellSouth shall refund DPI-Teleconnect the difference between the rate paid by DPI-Teleconnect for such services and the applicable UNE rate, including but not limited to any charges associated with the unnecessary conversion from UNE to other wholesale services.

Issue 7 – Are HDSL-capable copper loops the equivalent of DS1 loops for the purpose of evaluating impairment?

14. 2-wire or 4-wire HDSL-Compatible Loop. This is a designed Loop that meets Carrier Serving Area (CSA) specifications, may be up to 12,000 feet long and may have up to 2,500 feet of bridged tap (inclusive of Loop

length). It may be a 2-wire or 4-wire circuit and will come standard with a test point, OC, and a DLR.

15. 4-wire Unbundled DS1 Digital Loop.

This is a designed 4-wire Loop that is provisioned according to industry standards for DS1 or Primary Rate ISDN services and will come standard with a test point, OC, and a DLR. A DS1 Loop may be provisioned over a variety of loop transmission technologies including copper, HDSL-based technology or fiber optic transport systems. It will include a 4-wire DS1 Network Interface at the End User's location.

<u>Issue 8</u> – (a) Does the Commission have the authority to require BellSouth to include in its ICAs entered into pursuant to Section 252, network elements either under state law o pursuant to Section 271 or any other federal law other than Section 251? (b) If the answer to part (a) is affirmative in any respect, does the Commission have the authority to establish rates for such element? (c) If the answer to part (a) or (b) is affirmative in any respect, (i) what language, if any should be included in the ICA with regard to the rates for such elements, and (ii) what language, if any, should be included in the ICA with regard to the terms and conditions of such elements?

16. This Attachment sets forth rates, terms and conditions for unbundled network elements (Network Elements) and combinations of Network Elements (Combinations) that BellSouth offers to DPI-Teleconnect for DPI-Teleconnect's provision of Telecommunications Services in accordance with its obligations under Section 251(c)(3) of the Act.

<u>Issue 9</u> – What conditions, if any, should be imposed on moving, adding, or changing orders to a CLP's respective embedded base of switching, high-capacity loops, and dedicated transport, and what is the appropriate language to implement such conditions, if any?

17. For the state of North Carolina, during the Transition Period, CLEC shall be entitled to order and BellSouth shall provision UNE-P that CLEC orders for the purpose of serving CLEC's existing UNE-P End Users as of March 10, 2005`

<u>Issue 10</u> – What rates terms and conditions should govern the transition of existing network elements that BellSouth is no longer obligated to provide as Section 251 UNEs to non-Section 251 network elements and other services and (a) what is the proper treatment for such network elements at the end of the transition period,; and (b) what is the appropriate transition period, and what are the appropriate rates, terms and conditions during such transition period, for unbundled high-capacity loops, high capacity transport, and dark fiber transport in and between wire that do not meet the FCC's non-impairment standards at this time, but that meet such standards in the future?

18. Effective March 11, 2006, and except to the extent expressly provided otherwise in this Attachment, DPI-Teleconnect may not maintain unbundled network elements or combinations of unbundled network elements, that are no longer offered pursuant to this Agreement (collectively "Arrangements"). In the event BellSouth determines that DPI-Teleconnect has in place any Arrangements after the Effective Date of this Agreement, BellSouth will provide DPI-Teleconnect with thirty (30) days written notice to disconnect or convert such Arrangements. If DPI-Teleconnect fails to submit orders to disconnect or convert such Arrangements within such thirty (30) day period, BellSouth will transition such circuits to the equivalent tariffed BellSouth service(s). Those circuits identified and transitioned by BellSouth pursuant to this Section 18 shall be subject to applicable switch-as-is charges.

<u>Issue 13 –</u> What is the scope of commingling allowed under the FCC's rules and orders and what language should be included in Interconnection Agreements to implement commingling (including rates)?

19. **<u>Commingling of Services</u>**

19.1 Commingling means the connecting, attaching, or otherwise linking of a Network Element, or a Combination, to one or more Telecommunications Services or facilities that DPI-Teleconnect has obtained at wholesale from BellSouth, or the combining of a Network Element or Combination with one or more such wholesale Telecommunications Services or facilities consistent with the NCUC's Order dated March 1, 2006 in Docket No. P-55, Sub 1549. DPI-Teleconnect must comply with all rates, terms or conditions applicable to such wholesale Telecommunications Services or facilities.

19.2 Subject to the limitations set forth elsewhere in this Attachment, BellSouth shall not deny access to a Network Element or a Combination on the grounds that one or more of the elements: (1) is connected to, attached to, linked to, or combined with such a facility or service obtained from BellSouth; or (2) shares part of BellSouth's network with access services or inputs for mobile wireless services and/or interexchange services.

19.3 Unless otherwise agreed to by the Parties, the Network Element portion of a commingled circuit will be billed at the rates set forth in Exhibit B and the remainder of the circuit or service will be billed in accordance with BellSouth's tariffed rates or rates set forth in a separate agreement between the Parties.

19.4 When multiplexing equipment is attached to a commingled circuit, the multiplexing equipment will be billed from the same agreement or tariff as the higher bandwidth circuit. Central Office Channel Interfaces (COCI) will be billed from the same agreement or tariff as the lower bandwidth circuit.

19.5 Terms and conditions for order cancellation charges and Service Date Advancement Charges will apply in accordance with Attachment 6 and are incorporated herein by this reference. The charges shall be as set forth in Exhibit A to Attachment 2 of the Agreement.

Issue 14 – Is BellSouth required to provide conversion of special access circuits to UNE pricing, and, if so, at what rates, terms and conditions and during what timeframe should such new requests for such conversions be effectuated?

Issue 15 – What are the appropriate rates, terms and conditions and effective dates, if any, for conversion requests that were pending on the effective date of the TRO?

20. Conversion of Wholesale Services to Network Elements or Network Elements to Wholesale Services.

20.1 Upon request, BellSouth shall convert a wholesale service, or group of wholesale services, to the equivalent Network Element or Combination that is available to DPI-Teleconnect pursuant to this Agreement, or convert a Network Element or Combination that is available to DPI-Teleconnect under this Agreement to an equivalent wholesale service or group of wholesale services offered by BellSouth (collectively "Conversion"). BellSouth shall charge the applicable nonrecurring switch-as-is rates for Conversions to specific Network Elements or Combinations found in Exhibit B. BellSouth shall also charge the same nonrecurring switch-as-is rates when converting from Network Elements or Combinations. Any rate change resulting from the Conversion will be effective as of the next billing cycle following BellSouth's receipt of a complete and accurate Conversion request from the CLEC. A Conversion shall be considered termination for purposes of any volume and/or term commitments and/or grandfathered status between CLEC and BellSouth. Any change from a wholesale service/group of wholesale services to a Network Element/Combination, or from a Network Element/Combination to a wholesale service/group of wholesale services that requires a physical rearrangement will not be considered to be a Conversion for purposes of this Agreement. BellSouth shall not require physical rearrangements if the Conversion can be completed through record changes only. Orders for Conversions will be handled in accordance with the guidelines set forth in the Ordering Guidelines and Processes and CLEC Information Packages as referenced in Section 20.3 below.

20.2 To the extent, DPI-Teleconnect had a Conversion request pending between October 2, 2003 and the effective date of this Amendment, such Conversion shall be deemed converted as of the date of such request.

20.3 Ordering Guidelines and Processes

20.3.1 For information regarding Ordering Guidelines and Processes for various Network Elements, Combinations and Other Services, DPI-Teleconnect

should refer to the "Guides" section of the BellSouth Interconnection Web site.

20.3.2 Additional information may also be found in the individual CLEC Information Packages located at the "CLEC UNE Products" on BellSouth's Interconnection Web site at: www.interconnection.bellsouth.com/guides/html/unes.html.

20.3.3 The provisioning of Network Elements, Combinations and Other Services to DPI-Teleconnect's Collocation Space will require cross-connections within the central office to connect the Network Element, Combinations or Other Services to the demarcation point associated with DPI-Teleconnect's Collocation Space. These cross-connects are separate components that are not considered a part of the Network Element, Combinations or Other Services and, thus, have a separate charge pursuant to this Agreement.

Issue 18: LINE SPLITTING: What is the appropriate ICA language to implement BellSouth's obligations with regard to line splitting?

21. <u>Line Splitting</u>

21.1 Line splitting shall mean that DPI-Teleconnect purchases a whole loop and provides the splitter to provide voice and data services through an arrangement with a third party CLEC, who is either the provider of data services (Data CLEC) or the provider of voice services (Voice CLEC), to deliver voice and data service to End Users over the same Loop. The Voice CLEC and Data CLEC are different carriers, with DPI-Teleconnect being either the Voice CLEC or Data CLEC.

21.2 <u>Line Splitting – UNE-L.</u> In the event DPI-Teleconnect provides its own switching or obtains switching from a third party, DPI-Teleconnect may engage in line splitting arrangements with another CLEC using a splitter, provided by DPI-Teleconnect, in a Collocation Space at the central office where the loop terminates into a distribution frame or its equivalent.

21.3 <u>Line Splitting – Loop and Port</u>

To the extent DPI-Teleconnect is using a commingled arrangement that consists of an Unbundled Loop purchased pursuant to this Agreement and Local Switching provided by BellSouth pursuant to Section 271, BellSouth will permit DPI-Teleconnect to utilize Line Splitting. BellSouth shall charge the rates previously approved by the North Carolina Utilities Commission as set forth in Exhibit A of Attachment 2 in the Agreement.

21.4 DPI-Teleconnect shall provide BellSouth with a signed LOA between it and the third party CLEC (Data **C**LEC or Voice CLEC) with which it desires to provision Line Splitting services, where DPI-Teleconnect will not provide voice and data services.

21.5 <u>Provisioning Line Splitting and Splitter Space – Loop and Port</u>

21.5.1 The Data LEC, Voice CLEC, or a third party may provide the splitter. When DPI-Teleconnect or its authorized agent owns the splitter, Line Splitting requires the following: a non-designed analog Loop from the serving wire center to the NID at the End User's location; a collocation cross-connection connecting the Loop to the collocation space; and a second collocation cross-connection from the collocation space connected to a voice port.

21.5.2 An unloaded 2-wire copper Loop must serve the End User. The meet point for the Voice CLEC and the Data CLEC is the point of termination on the MDF for the Data CLEC's cable and pairs.

21.5.3 The foregoing procedures are applicable to migration from a UNE-P arrangement to Line Splitting Service, including a Line splitting service that includes a commingled arrangement of Loop and unbundled local switching pursuant to Section 271.

21.5.4 Provisioning Line Splitting and Splitter Space – UNE-L

21.5.4.1 **DPI-Teleconnect** provides the splitter when providing Line Splitting with UNE-L. When DPI-Teleconnect or its authorized agent owns the splitter, Line Splitting requires the following: a loop from NID at the End User's location to the serving wire center and terminating into a distribution frame or its equivalent.

21.6 Maintenance – Line Splitting – Loop and Port and UNE-L

21.6.1 BellSouth will be responsible for repairing voice troubles and the troubles with the physical loop between the NID at the End User's premises and the termination point.

21.6.2 BellSouth must make all necessary network modifications, including providing nondiscriminatory access to operations support systems necessary for pre-ordering, ordering, provisioning, maintenance and repair, and billing for loops used in line splitting arrangements.

21.7 Indemnity

21.7.1 DPI-Teleconnect shall indemnify, defend and hold harmless BellSouth from and against any claims, losses, damages and costs, which arise out of actions related to the other service provider, except to the extent caused by BellSouth's gross negligence or willful misconduct.

Issue 19 – What is the appropriate ICA language, if any, to address call related databases?

22. Call Related Databases and Signaling

22.1 Except for 911 and E911, BellSouth is not required to provide unbundled access to call related databases pursuant to section 251.

22.2 Automatic Location Identification/Data Management System

22.2.1 911 and E911 Databases

22.2.1.1 BellSouth shall provide DPI-Teleconnect with nondiscriminatory access to 911 and E911 databases on an unbundled basis, in accordance with 47 C.F.R. § 51.319 (f).

22.2.1.1 The ALI/DMS database contains End User information (including name, address, telephone information, and sometimes special information from the local service provider or End User) used to determine to which PSAP to route the call. The ALI/DMS database is used to provide enhanced routing flexibility for E911. DPI-Teleconnect will be required to provide the BellSouth 911 database vendor daily service order updates to E911 database in accordance with Section 22.3.1 below.

22.3 Technical Requirements

22.3.1 BellSouth's 911 database vendor shall provide DPI-Teleconnect the capability of providing updates to the ALI/DMS database through a specified electronic interface. DPI-Teleconnect shall contact BellSouth's 911 database vendor directly to request interface. DPI-Teleconnect shall provide updates directly to BellSouth's 911 database vendor on a daily basis. Updates shall be the responsibility of DPI-Teleconnect and BellSouth shall not be liable for the transactions between DPI-Teleconnect and BellSouth's 911 database vendor.

22.3.2 It is DPI-Teleconnect's responsibility to retrieve and confirm statistical data and to correct errors obtained from BellSouth's 911 database vendor on a daily basis. All errors will be assigned a unique error code and the description of the error and the corrective action is described in the CLEC Users Guide for Facility Based Providers that is found on the BellSouth Interconnection Web site.

22.3.3 DPI-Teleconnect shall conform to the BellSouth standards as described in the CLEC Users Guide to E911 for Facilities Based Providers that is located on the BellSouth's Interconnection Web site: www.interconnection.bellsouth.com/guides.

22.3.4 Stranded Unlocks are defined as End User records in BellSouth's ALI/DMS database that have not been migrated for over ninety (90) days to DPI-Teleconnect, as a new provider of local service to the End User. Stranded Unlocks are those End User records that have been "unlocked" by the previous local exchange carrier that provided service to the End User and are open for DPI-Teleconnect to assume responsibility for such records.

22.3.5 Based upon End User record ownership information available in the NPAC database, BellSouth shall provide a Stranded Unlock annual report to DPI-Teleconnect that reflects all Stranded Unlocks that remain in the ALI/DMS database for over ninety (90) days. DPI-Teleconnect shall review the Stranded Unlock report, identify its End User records and request to either delete such records or migrate the records to DPI-Teleconnect within two (2) months following the date of the Stranded Unlock report provided by BellSouth. DPI-Teleconnect shall reimburse BellSouth for any charges BellSouth's database vendor imposes on BellSouth for the deletion of DPI-Teleconnect's records.

Issue 20 - What is the appropriate language to implement BellSouth's obligation, if any, to offer unbundled access to newly deployed or "greenfield" fiber loops, including fiber loops deployed to the minimum point of entry (MPOE) of a multiple dwelling unit that is predominantly residential and what, if any impact does the ownership of the inside wiring from the MPOE to each end user have one this obligation?

23.1 Fiber to the Home (FTTH) loops are local loops consisting entirely of fiber optic cable, whether dark or lit, serving an End User's premises or, in the case of predominantly residential multiple dwelling units (MDUs), a fiber optic cable, whether dark or lit, that extends to the MDU minimum point of entry (MPOE). Fiber to the Curb loops are local loops consisting of fiber optic cable connecting to a copper distribution plant that is not more than five hundred (500) feet from the End User's premises or, in the case of predominantly residential MDUs, not more than five hundred (500) feet from the MDU's MPOE. The fiber optic cable in a FTTC loop must connect to a copper distribution plant at a serving area interface from which every other copper distribution subloop also is not more than five hundred (500) feet from the respective End User's premises. BellSouth shall offer CLPs unbundled access to FTTH/FTTC loops serving enterprise customers and predominantly business MDUs.

23.2 In new build (Greenfield) areas, where BellSouth has only deployed FTTH/FTTC facilities, BellSouth is under no obligation to provide such FTTH and FTTC Loops. FTTH facilities include fiber loops deployed to the MPOE of a MDU that is predominantly residential regardless of the ownership of the inside wiring from the MPOE to each End User in the MDU.

23.3 Notwithstanding the above, nothing in this Section shall limit BellSouth's obligation to offer CLECs an unbundled DS1 loop (or loop/transport combination) in any wire center where BellSouth is required to provide unbundled access to DS1 loops and loop/transport combinations

Issue 21: What is the appropriate ICA language to implement BellSouth's obligation to provide unbundled access to hybrid loops?

24. A hybrid loop is a local loop, composed of both fiber optic cable usually in the feeder plant and copper twisted wire or cable usually in the distribution plant. BellSouth shall provide unbundled access to hybrid loops pursuant to the requirements of 47 C.F.R. 51.319(a)(2).

Issue 22: What is the appropriate ICA language to implement BellSouth's obligation to provide RNMs?

Issue 23: What is the appropriate process for establishing a rate, if any, to allow for the cost of a routine network modification that is not already recovered in Commission-approved recurring and nonrecurring rates? What is the appropriate language, if any, to incorporate into the ICAs?

25. Routine Network Modifications

25.1 BellSouth will perform Routine Network Modifications (RNM) in accordance with FCC 47 CFR 51.319 (a)(7) and (e)(4) for Loops and Dedicated Transport provided under this Attachment. If BellSouth performs such RNM during normal operations and has recovered the costs for performing such modifications through the rates set forth in Exhibit A Attachment 2 of the Agreement, then BellSouth will perform such RNM at no additional charge.

25.2 RNM shall be performed within the intervals established for the Network Element and subject to the performance measurements and associated remedies set forth in Attachment 9 of this Agreement. If BellSouth has not recovered the costs of such RNM in the rates set forth in Exhibit A to Attachment 2 of the Agreement, then such request will be handled as a project on an individual case basis. BellSouth will provide a price quote for the request and, upon receipt of payment from DPI-Teleconnect, BellSouth will perform the RNM.

Issue 24: What is the appropriate language, if any, to address access to overbuild deployments of fiber to the home and fiber to the curb facilities?

26. In FTTH/FTTC overbuild situations where BellSouth also has copper Loops, BellSouth may make those copper Loops available to DPI-Teleconnect on an unbundled basis, pursuant to the requirements of 47 C.F.R. § 51.319(a)(3)(iii), BellSouth's retirements of copper loops or copper subloops must comply with the requirements of 47 C.F.R. § 51.319(a)(3)(iv).

Issue 25: What is the appropriate ICA language to implement BellSouth's EEL audit rights, if any, under the TRO?

EELs Audit provisions

27.1 BellSouth may, on an annual basis audit DPI-Teleconnect's records in order to verify compliance with the high capacity EEL eligibility criteria. To invoke its limited right to audit, BellSouth will send a Notice of Audit to DPI-Teleconnect stating its concern that DPI-Teleconnect is not complying with the service eligibility requirements as set forth above and a concise statement of the reasons therefore. Such Notice of Audit will be delivered to DPI-Teleconnect no less than thirty (30) calendar days prior to the date upon which BellSouth seeks to commence an audit. BellSouth is not required to provide documentation, as distinct from a statement of concern, to support its basis for an audit, or seek the concurrence of the requesting carrier before selecting the location of the audit.

27.2 The audit shall be conducted by a third party independent auditor, retained and paid for by BellSouth. BellSouth may select the independent auditor without the prior approval of DPI-Teleconnect or the Commission. Challenges to the independence of the auditor may be filed with the Commission only after the audit has been concluded. The audit must be performed in accordance with the standards established by the American Institute for Certified Public Accountants (AICPA) which will require the auditor to perform an "examination engagement" and issue an opinion regarding DPI-Teleconnect's compliance with the high capacity EEL eligibility criteria. AICPA standards and other AICPA requirements will be used to determine the independence of an auditor. The independent auditor's report will conclude whether DPI-Teleconnect complied in all material respects with the applicable service eligibility criteria. Consistent with standard auditing practices, such audits require compliance testing designed by the independent auditor.

27.3 To the extent the independent auditor's report concludes that DPI-Teleconnect failed to comply with the service eligibility criteria, DPI-Teleconnect must true-up any difference in payments, convert all noncompliant circuits to the appropriate service, and make the correct payments on a going-forward basis.

27.4 To the extent the independent auditor's report concludes that DPI-Teleconnect failed to comply in all material respects with the service eligibility criteria, DPI-Teleconnect shall reimburse BellSouth for the cost of the independent auditor. To the extent the independent auditor's report concludes that DPI-Teleconnect did comply in all material respects with the service eligibility criteria, BellSouth will reimburse DPI-Teleconnect for its reasonable and demonstrable costs associated with the audit. DPI-Teleconnect will maintain appropriate documentation to support its certifications. The Parties shall provide such reimbursement within thirty (30) calendar days of receipt of a statement of such costs.

28. DPI-Teleconnect shall not obtain a Network Element for the exclusive provision of mobile wireless services or interexchange services.

29. Facilities that do not terminate at a demarcation point at an End User premises, including, by way of example, but not limited to, facilities that terminate to another carrier's switch or premises, a cell site, Mobile Switching Center or base station, do not constitute local Loops under Section 251, except to the extent that DPI-Teleconnect may require Loops to such locations for the purpose of providing telecommunications services to its personnel at those locations.

30. Subloop Elements.

30.1 Where facilities permit, BellSouth shall offer access to its Unbundled Subloop (USL) elements as specified herein.

30.2 Unbundled Subloop Distribution (USLD)

30.2.1 The USLD facility is a dedicated transmission facility that BellSouth provides from an End User's point of demarcation to a BellSouth cross-connect device. The BellSouth cross-connect device may be located within a remote terminal (RT) or a stand-alone cross-box in the field or in the equipment room of a building. The USLD media is a copper twisted pair that can be provisioned as a 2-wire or 4-wire facility. BellSouth will make available the following subloop distribution offerings where facilities exist:

USLD – Voice Grade (USLD-VG)
Unbundled Copper Subloop (UCSL)
USLD – Intrabuilding Network Cable (USLD-INC (aka riser cable))

30.2.2 USLD-VG is a copper subloop facility from the cross-box in the field up to and including the point of demarcation at the End User's premises and may have load coils.

30.2.3 UCSL is a copper facility eighteen thousand (18,000) feet or less in length provided from the cross-box in the field up to and including the End User's point of demarcation. If available, this facility will not have any intervening equipment such as load coils between the End User and the cross-box.

30.2.4 If DPI-Teleconnect requests a UCSL and it is not available, DPI-Teleconnect may request the copper Subloop facility be modified pursuant to the ULM process to remove load coils and/or excessive bridged taps. If

load coils and/or excessive bridged taps are removed, the facility will be classified as a UCSL.

30.2.5 USLD-INC is the distribution facility owned or controlled by BellSouth inside a building or between buildings on the same property that is not separated by a public street or road. USLD-INC includes the facility from the cross-connect device in the building equipment room up to and including the point of demarcation at the End User's premises.

30.2.6 Upon request for USLD-INC from DPI-Teleconnect, BellSouth will install a cross-connect panel in the building equipment room for the purpose of accessing USLD-INC pairs from a building equipment room. The cross-connect panel will function as a single point of interconnection (SPOI) for USLD-INC and will be accessible by multiple carriers as space permits. BellSouth will place cross-connect blocks in twenty five (25) pair increments for DPI-Teleconnect's use on this cross-connect panel. DPI-Teleconnect will be responsible for connecting its facilities to the twenty five (25) pair cross-connect block(s).

30.2.7 For access to Voice Grade USLD and UCSL, DPI-Teleconnect shall install a cable to the BellSouth cross-box pursuant to the terms and conditions for physical collocation for remote sites set forth in Attachment 4. This cable would be connected by a BellSouth technician within the BellSouth cross-box during the set-up process. DPI-Teleconnect's cable pairs can then be connected to BellSouth's USL within the BellSouth cross-box by the BellSouth technician.

30.2.8 Through the SI process, BellSouth will determine whether access to USLs at the location requested by DPI-Teleconnect is technically feasible and whether sufficient capacity exists in the cross-box. If existing capacity is sufficient to meet DPI-Teleconnect's request, then BellSouth will perform the site set-up as described in the CLEC Information Package, located at BellSouth's Interconnection Web site: www.interconnection.bellsouth.com/products/html/unes.html.

30.2.9 The site set-up must be completed before DPI-Teleconnect can order Subloop pairs. For the site set-up in a BellSouth cross-connect box in the field, BellSouth will perform the necessary work to splice DPI-Teleconnect's cable into the cross-connect box. For the site set-up inside a building equipment room, BellSouth will perform the necessary work to install the cross-connect panel and the connecting block(s) that will be used to provide access to the requested USLs.

30.2.10 Once the site set-up is complete, DPI-Teleconnect will request Subloop pairs through submission of a LSR form to the LCSC. OC is required with USL pair provisioning when DPI-Teleconnect requests reuse of an existing facility, and the OC charge shall be billed in addition to the USL pair rate. For expedite requests by DPI-Teleconnect for Subloop pairs, expedite charges will apply for intervals less than five (5) days.

30.2.11 USLs will be provided in accordance with BellSouth's TR73600 Unbundled Local Loop Technical Specifications.

30.3 Unbundled Network Terminating Wire (UNTW)

30.3.1 UNTW is unshielded twisted copper wiring that is used to extend circuits from an intra-building network cable terminal or from a building entrance terminal to an individual End User's point of demarcation. It is the final portion of the Loop that in multi-subscriber configurations represents the point at which the network branches out to serve individual subscribers.

30.3.1.1 This element will be provided in MDUs and/or Multi-Tenants Units (MTUs) where either Party owns wiring all the way to the End User's premises. Neither Party will provide this element in locations where the property owner provides its own wiring to the End User's premises, where a third party owns the wiring to the End User's premises.

30.3.2 Requirements

30.3.2.1 On a multi-unit premises, upon request of the other Party (Requesting Party), the Party owning the network terminating wire (Provisioning Party) will provide access to UNTW pairs on an Access Terminal that is suitable for use by multiple carriers at each Garden Terminal or Wiring Closet.

30.3.2.2 The Provisioning Party shall not be required to install new or additional NTW beyond existing NTW to provision the services of the Requesting Party.

30.3.2.3 In existing MDUs and/or MTUs in which BellSouth does not own or control wiring (INC/NTW) to the End Users premises, and DPI-Teleconnect does own or control such wiring, DPI-Teleconnect will install UNTW Access Terminals for BellSouth under the same terms and conditions as BellSouth provides UNTW Access Terminals to DPI-Teleconnect.

30.2.3.4 In situations in which BellSouth activates a UNTW pair, BellSouth will compensate DPI-Teleconnect for each pair activated commensurate to the price specified in DPI-Teleconnect's Agreement.

30.2.3.5 Upon receipt of the UNTW SI requesting access to the Provisioning Party's UNTW pairs at a multi-unit premises, representatives of both Parties will participate in a meeting at the site of the requested access. The purpose of the site visit will include discussion of the procedures for installation and location of the Access Terminals. By request of the Requesting Party, an Access Terminal will be installed either adjacent to each of the Provisioning Party's Garden Terminal or inside each Wiring Closet. The Requesting Party will deliver and connect its central office facilities to the UNTW pairs within the Access Terminal. The Requesting Party may access any available pair on an Access Terminal. A pair is available when a pair is not being utilized to provide service or where the End User has requested a change in its local service provider to the

Requesting Party. Prior to connecting the Requesting Party's service on a pair previously used by the Provisioning Party, the Requesting Party is responsible for ensuring the End User is no longer using the Provisioning Party's service or another CLEC's service before accessing UNTW pairs.

30.3.2.6 Access Terminal installation intervals will be established on an individual case basis.

30.3.2.7 The Requesting Party is responsible for obtaining the property owner's permission for the Provisioning Party to install an Access Terminal(s) on behalf of the Requesting Party. The submission of the SI by the Requesting Party will serve as certification by the Requesting Party that such permission has been obtained. If the property owner objects to Access Terminal installations that are in progress or within thirty (30) days after completion and demands removal of Access Terminals, the Requesting Party will be responsible for costs associated with removing Access Terminals and restoring the property to its original state prior to Access Terminals being installed.

30.3.2.8 The Requesting Party shall indemnify and hold harmless the Provisioning Party against any claims of any kind that may arise out of the Requesting Party's failure to obtain the property owner's permission. The Requesting Party will be billed for nonrecurring and recurring charges for accessing UNTW pairs at the time the Requesting Party activates the pair(s). The Requesting Party will notify the Provisioning Party within five (5) business days of activating UNTW pairs using the LSR form.

30.3.2.9 If a trouble exists on a UNTW pair, the Requesting Party may use an alternate spare pair that serves that End User if a spare pair is available. In such cases, the Requesting Party will re-terminate its existing jumper from the defective pair to the spare pair. Alternatively, the Requesting Party will isolate and report troubles in the manner specified by the Provisioning Party. The Requesting Party must tag the UNTW pair that requires repair. If the Provisioning Party dispatches a technician on a reported trouble call and no UNTW trouble is found, the Provisioning Party will charge Requesting Party for time spent on the dispatch and testing the UNTW pair(s).

30.3.2.10 If the Requesting Party initiates the Access Terminal installation and the Requesting Party has not activated at least ten percent (10%) of the capacity of the Access Terminal installed pursuant to the Requesting Party's request for an Access Terminal within six (6) months of installation of the Access Terminal, the Provisioning Party will bill the Requesting Party a nonrecurring charge equal to the actual cost of provisioning the Access Terminal.

30.3.3.11 If the Provisioning Party determines that the Requesting Party is using the UNTW pairs without reporting the activation of the pairs, the Requesting Party will be billed for the use of that pair back to the date the End User began receiving service from the Requesting Party at that location. Upon

request, the Requesting Party will provide copies of its billing record to substantiate such date. If the Requesting Party fails to provide such records, then the Provisioning Party will bill the Requesting Party back to the date of the Access Terminal installation.

UNBUNDLED NETWORK ELEMENTS - North Carolina														Attachment: 2 Exh A			
CATEGORY	RATE ELEMENTS	Interim	Zone	BCS	USOC	RATES($)					Svc Order Submitted Elec per LSR	Svc Order Submitted Manually per LSR	Incremental Charge - Manual Svc Order vs. Electronic-1st	Incremental Charge - Manual Svc Order vs. Electronic-Add'l	Incremental Charge - Manual Svc Order vs. Electronic-Disc 1st	Incremental Charge - Manual Svc Order vs. Electronic-Disc Add'l
							Nonrecurring		Nonrecurring Disconnect		OSS Rates($)					
						Rec	First	Add'l	First	Add'l	SOMEC	SOMAN	SOMAN	SOMAN	SOMAN	SOMAN
UNBUNDLED EXCHANGE ACCESS LOOP																
2-WIRE ANALOG VOICE GRADE LOOP																
	Switch-As-Is Conversion rate per UNE Loop, Single LSR, (per DS0)			UEA	URESL		25.03	3.53								
	Switch-As-Is Conversion rate per UNE Loop, Spreadsheet, (per DS0)			UEA	URESP		26.52	5.02								
4-WIRE ANALOG VOICE GRADE LOOP																
	Switch-As-Is Conversion rate per UNE Loop, Single LSR, (per DS0)			UEA	URESL		25.03	3.53								
	Switch-As-Is Conversion rate per UNE Loop, Spreadsheet, (per DS0)			UEA	URESP		26.52	5.02								
4-WIRE DS1 DIGITAL LOOP																
	Switch-As-Is Conversion rate per UNE Loop, Single LSR, (per DS1)			USL	URESL		25.03	3.53								
	Switch-As-Is Conversion rate per UNE Loop, Spreadsheet, (per DS1)			USL	URESP		26.52	5.02								
4-WIRE 19.2, 56 OR 64 KBPS DIGITAL GRADE LOOP																
	Switch-As-Is Conversion rate per UNE Loop, Single LSR, (per DS0)			UDL	URESL		25.03	3.53								
	Switch-As-Is Conversion rate per UNE Loop, Spreadsheet, (per DS0)			UDL	URESP		26.52	5.02								
ADDITIONAL NETWORK ELEMENTS																
	Wholesale to UNE, Switch-As-Is Conversion Charge			UNCVX, U1TVX, UNCDX, U1TDX, UNC1X, U1TD1,UNC3X, U1TD3, UNCSX, U1TS1, UDF,UDFCX	UNCCC		38.39	17.64								
	Unbundled Misc Rate Element, SNE SAI, Single Network Element - Switch As Is Non-recurring Charge, per circuit (LSR)			U1TVX, U1TDX, U1TD1, U1TD3, U1TS1, UDF, UE3	URESL		36.90	16.15								
	Unbundled Misc Rate Element, SNE SAI, Single Network Element - Switch As Is Non-recurring Charge, incremental charge per circuit on a spreadsheet			U1TVX, U1TDX, U1TD1, U1TD3, U1TS1, UDF, UE3	URESP		1.49	1.49								
UNE LOOP COMMINGLING																
2-WIRE ANALOG VOICE GRADE LOOP - COMMINGLING																
	2-Wire Analog Voice Grade Loop - Service Level 2 w/Loop or Ground Start Signaling - Zone 1		1	NTCVG	UEAL2	11.96	102.10	65.72								
	2-Wire Analog Voice Grade Loop - Service Level 2 w/Loop or Ground Start Signaling - Zone 2		2	NTCVG	UEAL2	17.36	102.10	65.72								
	2-Wire Analog Voice Grade Loop - Service Level 2 w/Loop or Ground Start Signaling - Zone 3		3	NTCVG	UEAL2	25.23	102.10	65.72								
	2-Wire Analog Voice Grade Loop - Service Level 2 w/Reverse Battery Signaling - Zone 1		1	NTCVG	UEAR2	11.96	102.10	65.72								
	2-Wire Analog Voice Grade Loop - Service Level 2 w/Reverse Battery Signaling - Zone 2		2	NTCVG	UEAR2	17.36	102.10	65.72								
	2-Wire Analog Voice Grade Loop - Service Level 2 w/Reverse Battery Signaling - Zone 3		3	NTCVG	UEAR2	25.23	102.10	65.72								
	Switch-As-Is Conversion rate per UNE Loop, Single LSR, (per DS0)			NTCVG	URESL		25.03	3.53								
	Switch-As-Is Conversion rate per UNE Loop, Spreadsheet, (per DS0)			NTCVG	URESP		26.52	5.02								
	CLEC to CLEC Conversion Charge without outside dispatch			NTCVG	UREWO		87.49	36.26								
	Loop Tagging - Service Level 2 (SL2)			NTCVG	URETL		11.20	1.10								
4-WIRE ANALOG VOICE GRADE LOOP -COMMINGLING																
	4-Wire Analog Voice Grade Loop - Zone 1		1	NTCVG	UEAL4	19.52	127.40	91.02								
	4-Wire Analog Voice Grade Loop - Zone 2		2	NTCVG	UEAL4	24.74	127.40	91.02								

UNBUNDLED NETWORK ELEMENTS - North Carolina														Attachment: 2 Exh A			
CATEGORY	RATE ELEMENTS	Interim	Zone	BCS	USOC	RATES($)					Svc Order Submitted Elec per LSR	Svc Order Submitted Manually per LSR	Incremental Charge - Manual Svc Order vs. Electronic-1st	Incremental Charge - Manual Svc Order vs. Electronic-Add'l	Incremental Charge - Manual Svc Order vs. Electronic-Disc 1st	Incremental Charge - Manual Svc Order vs. Electronic-Disc Add'l
							Nonrecurring		Nonrecurring Disconnect		OSS Rates($)					
						Rec	First	Add'l	First	Add'l	SOMEC	SOMAN	SOMAN	SOMAN	SOMAN	SOMAN
	4-Wire Analog Voice Grade Loop - Zone 3		3	NTCVG	UEAL4	46.11	127.40	91.02								
	Switch-As-Is Conversion rate per UNE Loop, Single LSR, (per DS0)			NTCVG	URESL		25.03	3.53								
	Switch-As-Is Conversion rate per UNE Loop, Spreadsheet, (per DS0)			NTCVG	URESP		26.52	5.02								
	CLEC to CLEC Conversion Charge without outside dispatch			NTCVG	UREWO		87.49	36.26								
4-WIRE DS1 DIGITAL LOOP - COMMINGLING																
	4-Wire DS1 Digital Loop - Zone 1		1	NTCD1	USLXX	63.62	245.16	152.98								
	4-Wire DS1 Digital Loop - Zone 2		2	NTCD1	USLXX	104.40	245.16	152.98								
	4-Wire DS1 Digital Loop - Zone 3		3	NTCD1	USLXX	210.22	245.16	152.98								
	Switch-As-Is Conversion rate per UNE Loop, Single LSR, (per DS1)			NTCD1	URESL		25.03	3.53								
	Switch-As-Is Conversion rate per UNE Loop, Spreadsheet, (per DS1)			NTCD1	URESP		26.52	5.02								
	CLEC to CLEC Conversion Charge without outside dispatch			NTCD1	UREWO		100.82	42.93								
4-WIRE 19.2, 56 OR 64 KBPS DIGITAL GRADE LOOP - COMMINGLING																
	4 Wire Unbundled Digital Loop 2.4 Kbps - Zone 1		1	NTCUD	UDL2X	21.98	121.86	85.48								
	4 Wire Unbundled Digital Loop 2.4 Kbps - Zone 2		2	NTCUD	UDL2X	27.58	121.86	85.48								
	4 Wire Unbundled Digital Loop 2.4 Kbps - Zone3		3	NTCUD	UDL2X	43.08	121.86	85.48								
	4 Wire Unbundled Digital Loop 4.8 Kbps -Zone 1		1	NTCUD	UDL4X	21.98	121.86	85.48								
	4 Wire Unbundled Digital Loop 4.8 Kbps - Zone 2		2	NTCUD	UDL4X	27.58	121.86	85.48								
	4 Wire Unbundled Digital Loop 4.8 Kbps - Zone 3		3	NTCUD	UDL4X	43.08	121.86	85.48								
	4 Wire Unbundled Digital Loop 9.6 Kbps - Zone 1		1	NTCUD	UDL9X	21.98	121.86	85.48								
	5 Wire Unbundled Digital Loop 9.6 Kbps - Zone 2		2	NTCUD	UDL9X	27.58	121.86	85.48								
	6 Wire Unbundled Digital Loop 9.6 Kbps - Zone 3		3	NTCUD	UDL9X	43.08	121.86	85.48								
	4 Wire Unbundled Digital 19.2 Kbps - Zone 1		1	NTCUD	UDL19	21.98	121.86	85.48								
	4 Wire Unbundled Digital 19.2 Kbps - Zone 2		2	NTCUD	UDL19	27.58	121.86	85.48								
	4 Wire Unbundled Digital 19.2 Kbps - Zone 3		3	NTCUD	UDL19	43.08	121.86	85.48								
	4 Wire Unbundled Digital Loop 56 Kbps - Zone 1		1	NTCUD	UDL56	21.98	121.86	85.48								
	4 Wire Unbundled Digital Loop 56 Kbps - Zone 2		2	NTCUD	UDL56	27.58	121.86	85.48								
	4 Wire Unbundled Digital Loop 56 Kbps - Zone 3		3	NTCUD	UDL56	43.08	121.86	85.48								
	4 Wire Unbundled Digital Loop 64 Kbps - Zone 1		1	NTCUD	UDL64	21.98	121.86	85.48								
	4 Wire Unbundled Digital Loop 64 Kbps - Zone 2		2	NTCUD	UDL64	27.58	121.86	85.48								
	4 Wire Unbundled Digital Loop 64 Kbps - Zone 3		3	NTCUD	UDL64	43.08	121.86	85.48								
	Switch-As-Is Conversion rate per UNE Loop, Single LSR, (per DS0)			NTCUD	URESL		25.03	3.53								
	Switch-As-Is Conversion rate per UNE Loop, Spreadsheet, (per DS0)			NTCUD	URESP		26.52	5.02								
	CLEC to CLEC Conversion Charge without outside dispatch			NTCUD	UREWO		101.86	49.62								
	Order Coordination for Specified Conversion Time (per LSR)			NTCVG, NTCUD, NTCD1	OCOSL		17.56									
LINE SPLITTING																
END USER ORDERING-CENTRAL OFFICE BASED																
	Line Splitting - per line activation DLEC owned splitter			UEPSR UEPSB	UREOS	0.61	15.53	7.79								
UNBUNDLED EXCHANGE ACCESS LOOP																
2-WIRE ANALOG VOICE GRADE LOOP																
	2 Wire Analog Voice Grade Loop-Service Level 1-Line Splitting-Zone 1		1	UEPSR UEPSB	UEALS	10.82	36.54	16.87	0.00	0.00						
	2 Wire Analog Voice Grade Loop-Service Level 1-Line Splitting-Zone 1		1	UEPSR UEPSB	UEABS	10.82	36.54	16.87	0.00	0.00						
	2 Wire Analog Voice Grade Loop- Service Level 1-Line Splitting-Zone 2		2	UEPSR UEPSB	UEALS	16.21	36.54	16.87	0.00	0.00						
	2 Wire Analog Voice Grade Loop- Service Level 1-Line Splitting-Zone 2		2	UEPSR UEPSB	UEABS	16.21	36.54	16.87	0.00	0.00						
	2 Wire Analog Voice Grade Loop-Service Level 1-Line Splitting-Zone 3		3	UEPSR UEPSB	UEALS	24.08	36.54	16.87	0.00	0.00						
	2 Wire Analog Voice Grade Loop-Service Level 1-Line Splitting-Zone 3		3	UEPSR UEPSB	UEABS	24.08	36.54	16.87	0.00	0.00						
COMMINGLING																

UNBUNDLED NETWORK ELEMENTS - North Carolina														Attachment: 2 Exh A			
CATEGORY		RATE ELEMENTS	Interim	Zone	BCS	USOC	RATES($)					Svc Order Submitted Elec per LSR	Svc Order Submitted Manually per LSR	Incremental Charge - Manual Svc Order vs. Electronic-1st	Incremental Charge - Manual Svc Order vs. Electronic-Add'l	Incremental Charge - Manual Svc Order vs. Electronic-Disc 1st	Incremental Charge - Manual Svc Order vs. Electronic-Disc Add'l
								Nonrecurring		Nonrecurring Disconnect		OSS Rates($)					
							Rec	First	Add'l	First	Add'l	SOMEC	SOMAN	SOMAN	SOMAN	SOMAN	SOMAN
		Commingling Authorization			UNCVX, UNCDX, UNC1X, UNC3X, UNCSX, U1TD1, U1TD3, U1TS1, UE3, UDLSX, U1TVX, U1TDX, U1TUB, ULDVX, ULDD1, ULDD3, ULDS1	CMGAU	0.00	0.00	0.00								
	Commingled (UNE part of single bandwidth circuit)																
		Commingled VG COCI			XDV2X, NTCVG	1D1VG	0.4329	54.14	17.51								
		Commingled Digital COCI			XDV6X, NTCUD	1D1DD	0.9199	54.14	17.51								
		Commingled ISDN COCI			XDD4X	UC1CA	1.53	54.14	17.51								
		Commingled 2-wire VG Interoffice Channel Facility Termination			XDV2X	U1TV2	12.12	131.81	78.34								
		Commingled 4-wire VG Interoffice Channel Facility Termination			XDV6X	U1TV4	10.19	131.81	78.34								
		Commingled 56kbps Interoffice Channel Facility Termination			XDD4X	U1TD5	7.47	131.81	78.34								
		Commingled 64kbps Interoffice Channel Facility Termination			XDD4X	U1TD6	7.47	131.81	78.34								
		Commingled VG/DS0 Interoffice Channel per mile			XDV2X, XDV6X, XDD4X	1L5XX	0.0095										
		Commingled 2-wire Local Loop Zone 1		1	XDV2X	UEAL2	11.96	385.26	72.08								
		Commingled 2-wire Local Loop Zone 2		2	XDV2X	UEAL2	17.36	385.26	72.08								
		Commingled 2-wire Local Loop Zone 3		3	XDV2X	UEAL2	25.23	385.26	72.08								
		Commingled 4-wire Local Loop Zone 1		1	XDV6X	UEAL4	19.52	385.26	72.08								
		Commingled 4-wire Local Loop Zone 2		2	XDV6X	UEAL4	24.74	385.26	72.08								
		Commingled 4-wire Local Loop Zone 3		3	XDV6X	UEAL4	46.11	385.26	72.08								
		Commingled 56kbps Local Loop Zone 1		1	XDD4X	UDL56	21.98	385.26	72.08								
		Commingled 56kbps Local Loop Zone 2		2	XDD4X	UDL56	27.58	385.26	72.08								
		Commingled 56kbps Local Loop Zone 3		3	XDD4X	UDL56	43.08	385.26	72.08								
		Commingled 64kbps Local Loop Zone 1		1	XDD4X	UDL64	21.98	385.26	72.08								
		Commingled 64kbps Local Loop Zone 2		2	XDD4X	UDL64	27.58	385.26	72.08								
		Commingled 64kbps Local Loop Zone 3		3	XDD4X	UDL64	43.08	385.26	72.08								
		Commingled ISDN Local Loop Zone 1		1	XDD4X	U1L2X	19.78	385.26	72.08								
		Commingled ISDN Local Loop Zone 2		2	XDD4X	U1L2X	26.16	385.26	72.08								
		Commingled ISDN Local Loop Zone 3		3	XDD4X	U1L2X	35.37	385.26	72.08								
		Commingled DS1 COCI			XDH1X, NTCD1	UC1D1	8.43	54.14	17.51								
		Commingled DS1 Interoffice Channel Facility Termination			XDH1X	U1TF1	31.06	234.02	162.52								
		Commingled DS1 Interoffice Channel per mile			XDH1X	1L5XX	0.1938										
		Commingled DS1/DS0 Channel System			XDH1X	MQ1	70.84	170.57									
		Commingled DS1 Local Loop Zone 1		1	XDH1X	USLXX	63.62	412.03	139.55								
		Commingled DS1 Local Loop Zone 2		2	XDH1X	USLXX	104.40	412.03	139.55								
		Commingled DS1 Local Loop Zone 3		3	XDH1X	USLXX	210.22	412.03	139.55								
		Commingled DS3 Local Loop Facility Termination			HFQC6	UE3PX	229.90	3,073.55	1,245.84								
		Commingled DS3/STS-1 Local Loop per mile			HFQC6, HFRST	1L5ND	12.95										
		Commingled STS-1 Local Loop Facility Termination			HFRST	UDLS1	257.82	3,073.55	1,245.84								
		Commingled DS3/DS1 Channel System			HFQC6	MQ3	84.32										
		Commingled DS3 Interoffice Channel Facility Termination			HFQC6	U1TF3	329.91	802.81	146.02								
		Commingled DS3 Interoffice Channel per mile			HFQC6	1L5XX	4.44										
		Commingled STS-1Interoffice Channel Facility Termination			HFRST	U1TFS	339.20	802.81	146.02								
		Commingled STS-1Interoffice Channel per mile			HFRST	1L5XX	4.44										
		Commingled Dark Fiber - Interoffice Transport, Per Four Fiber Strands, Per Route Mile Or Fraction Thereof			HEQDL	1L5DF	24.77										
		Commingled Dark Fiber - Interoffice Transport, Per Four Fiber Strands, Per Route Mile Or Fraction Thereof			HEQDL	UDF14		620.60	133.88								

Amendment to the Agreement
Between
DPI-Teleconnect, LLC
and
BellSouth Telecommunications, Inc.
Dated 4/19/2003

Pursuant to this Amendment, (the "Amendment"), DPI-Teleconnect, LLC (DPI-Teleconnect), and BellSouth Telecommunications, Inc. (BellSouth), hereinafter referred to collectively as the "Parties", hereby agree to amend that certain Interconnection Agreement between the Parties dated 4/19/2003 (Agreement).

WHEREAS, BellSouth and DPI-Teleconnect have entered into good faith negotiations pursuant to the Act to renegotiate an interconnection agreement ("New Agreement") to replace the existing Agreement between the Parties, which expired on 4/18/2006; and

WHEREAS, the Parties desire to extend the term of the Agreement; and

WHEREAS, on February 7, 2006, the Florida Public Service Commission rendered its decision in Docket No. 041269-TP, Petition to Establish Generic Docket to Consider Amendments to Interconnection Agreements Resulting from Change of Law (Decision);

WHEREAS, the Parties are obligated to amend the Agreement to incorporate the Decision;

NOW, THEREFORE, in consideration of the mutual provisions contained herein and other good and valuable consideration, the receipt and sufficiency of which are hereby acknowledged, the Parties hereby covenant and agree as follows:

1. The Parties hereby agree to extend the term of the Agreement by ninety (90) days following the date of the last signature of this Amendment. Other than the modification of the expiration date as described in this Amendment, all provisions in Section 2 of the General Terms and Conditions of the Agreement relating to the term and termination of the Agreement remain in full force and effect.

2. The Parties hereby agree to incorporate into the Agreement the contract provisions set forth in Exhibit A hereto, and such contract provisions shall apply to services provided in the State of Florida only.

3. The Parties hereby agree to incorporate into the Agreement the rates set forth in Exhibit B hereto, and such rates shall apply to services provided in the State of Florida only.

4. To the extent that such contract provisions or rates as set forth in Exhibits A and B hereto conflict with any other rates, terms and conditions in the Agreement, the

contract provisions and rates in Exhibits A and B shall prevail in the State of Florida.

6. Further, to the extent that defined terms in this Amendment differ from defined terms in the Agreement, such defined terms in the Agreement shall be deemed to have the same meaning as the alternative defined terms in this Amendment to the extent necessary to give full effect to this Amendment consistent with the Florida Commission's Decision.

6. All performance data and penalties associated for services (de-listed elements) no longer required under Section 251(c)(3) should be removed from BellSouth's SQM/PMAP/SEEM plans and are inapplicable for services that are no longer provided pursuant to the Agreement.

7. This Amendment shall be approved on the date the Florida Public Service Commission issues an order approving the Amendment (Approved Date) and shall be deemed effective on March 11, 2006 (Effective Date).

8. All of the other provisions of the Agreement shall remain in full force and effect.

9. Either or both of the Parties is authorized to submit this Amendment to the respective state regulatory authorities for approval subject to Section 252(e) of the Federal Telecommunications Act of 1996.

IN WITNESS WHEREOF, the Parties have executed this Amendment the day and year written below.

BellSouth Telecommunications, Inc.	**DPI-Teleconnect, LLC**
By: Kristen G. Shore	By: David B. Dorwart
Name: Kristen Shore	Name: DAVID B. DORWART
Title: Director	Title: PRESIDENT + CEO
Date: 11/16/06	Date: 11/14/06

FL COL

1. Transition for DS1 and DS3 Loops

1.1 For purposes of this Section 1, the Transition Period for the Embedded Base of DS1 and DS3 Loops and for the Excess DS1 and DS3 Loops is the twelve (12) month period beginning March 11, 2005 and ending March 10, 2006.

1.2 For purposes of this Section 1, Embedded Base means DS1 and DS3 Loops that were in service for DPI-Teleconnect as of March 11, 2005, in those wire centers that, as of such date, met the criteria set forth in Section 1.4.1 and 1.4.2. Subsequent disconnects or loss of End Users shall be removed from the Embedded Base.

1.3 Excess DS1 and DS3 Loops are those DPI-Teleconnect DS1 and DS3 Loops in service as of March 11, 2005, in excess of the caps set forth in Sections 1.3.1 and 1.3.2 below, respectively. Subsequent disconnects or loss of End Users shall be removed from Excess DS1 and DS3 Loops.

1.3.1 BellSouth shall not provide more than ten (10) unbundled DS1 Loops to DPI-Teleconnect at any single building in which DS1 Loops are available as unbundled loops.

1.3.2 DPI-Teleconnect may obtain a maximum of a single Unbundled DS3 loop to any single building in which DS3 Loops are available as Unbundled Loops.

1.4 Notwithstanding anything to the contrary in this Agreement, and except as set forth in Section 11, BellSouth shall make available DS1 and DS3 Loops only for DPI-Teleconnect's Embedded Base during the Transition Period:

1.4.1 DS1 Loops to any Building served by a wire center containing 60,000 or more Business Lines and four (4) or more fiber-based collocators (DS1 Threshold).

1.4.2 DS3 Loops to any Building served by a wire center containing 38,000 or more Business Lines and four (4) or more fiber-based collocators (DS3 Threshold).

1.5 The initial list of wire centers (Initial Wire Center List) meeting the criteria set forth in Sections 1.4.1 and 1.4.2 above, is set forth in Section 5.2.4 hereto. As of the effective date of this Amendment, no self-certification in any wire center set forth in the Initial Wire Center List is permitted.

1.6 Transition Period Pricing. From March 11, 2005, through the completion of the Transition Period, BellSouth shall charge a rate for DPI-Teleconnect's Embedded Base and DPI-Teleconnect's Excess DS1 and DS3 Loops equal to the higher of:

1.6.1 115% of the rate paid for that element on June 15, 2004; or

1.6.2 115% of a new rate the Commission establishes, if any, between June 16, 2004 and March 11, 2005.

1.6.3 These rates shall be as set forth in Exhibit A to Attachment 2 of the Agreement and this Section 1.6.

1.7 The Transition Period shall apply only to (1) DPI-Teleconnect's Embedded Base and (2) DPI-Teleconnect's Excess DS1 and DS3 Loops. DPI-Teleconnect shall not add new DS1 or DS3 loops pursuant to this Agreement.

1.8 DPI-Teleconnect shall provide spreadsheets to BellSouth no later than March 10, 2006, identifying the specific DS1 and DS3 Loops, including the Embedded Base and Excess DS1 and DS3 Loops to be either (1) disconnected and transitioned to wholesale facilities obtained from other carriers or self-provisioned facilities; or (2) converted to other available UNE Loops or other wholesale facilities provided by BellSouth, including special access. For Conversions as defined in Section 15, such spreadsheets shall take the place of an LSR or ASR. The Parties shall negotiate a project schedule for the Conversion of the Embedded Base and Excess DS1 and DS3 Loops. If a DPI-Teleconnect chooses to convert the DS1 and DS3 UNE Loops to special access circuits, BellSouth will include such DS1 and DS3 Loops once converted within DPI-Teleconnect's total special access circuits and apply any discounts to which DPI-Teleconnect is entitled.

1.8.1 If DPI-Teleconnect submits the spreadsheet(s) for its Embedded Base and Excess DS1 and DS3 Loops on or before March 10, 2006, those identified circuits shall be subject to the Commission-approved switch-as-is conversion nonrecurring charges and no UNE disconnect charges.

1.8.2 If DPI-Teleconnect fails to submit the spreadsheet(s) for its Embedded Base and Excess DS1 and DS3 Loops on or before March 10, 2006, BellSouth will identify and transition such circuits to the equivalent wholesale services provided by BellSouth. Those circuits identified and transitioned by BellSouth pursuant to this Section shall be subject to all applicable UNE disconnect charges as set forth in this Agreement and the full nonrecurring charges for installation of the equivalent tariffed BellSouth service as set forth in BellSouth's tariffs.

1.9 For Embedded Base circuits and Excess DS1 and DS3 Loops converted, the applicable recurring tariff charge shall apply to each circuit as of March 11, 2006. The transition of the Embedded Base and Excess DS1 and DS3 Loops should be performed in a manner that avoids, or otherwise minimizes to the extent possible, disruption or degradation to DPI-Teleconnect's customers' service.

2. <u>Dark Fiber Loop</u>

2.1 Dark Fiber Loop is an unused optical transmission facility, without attached signal regeneration, multiplexing, aggregation or other electronics, from the demarcation point at an End User's premises to the End User's serving wire center. Dark Fiber

Loops may be strands of optical fiber existing in aerial or underground structure. BellSouth will not provide line terminating elements, regeneration or other electronics necessary for DPI-Teleconnect to utilize Dark Fiber Loops.

2.2 Transition for Dark Fiber Loop

2.2.1 For purposes of this Section 2.2, the Transition Period for Dark Fiber Loops is the eighteen (18) month period beginning March 11, 2005 and ending September 10, 2006.

2.2.2 For purposes of this Section 2.2, Embedded Base means Dark Fiber Loops that were in service for DPI-Teleconnect as of March 11, 2005. Subsequent disconnects or loss of End Users shall be removed from the Embedded Base.

2.2.3 During the Transition Period only, BellSouth shall make available for the Embedded Base Dark Fiber Loops for DPI-Teleconnect at the terms and conditions set forth in this Attachment.

2.2.4 Transition Period Pricing. From March 11, 2005, through the completion of the Transition Period, BellSouth shall charge a rate for DPI-Teleconnect's Embedded Base of Dark Fiber Loops equal to the higher of:

2.2.4.1 115% of the rate paid for that element on June 15, 2004; or

2.2.4.2 115% of a new rate the Commission establishes, if any, between June 16, 2004 and March 11, 2005.

2.2.4.3 These rates shall be as set forth in Exhibit A to Attachment 2 of the Agreement and this Section 2.2.4.

2.2.4.4 The Transition Period shall apply only to DPI-Teleconnect's Embedded Base and DPI-Teleconnect shall not add new Dark Fiber Loops pursuant to this Agreement.

2.2.5 Effective September 11, 2006, Dark Fiber Loops will no longer be made available pursuant to this Agreement.

2.2.6 DPI-Teleconnect shall provide spreadsheets to BellSouth no later than September 10, 2006, identifying the specific Dark Fiber Loops, to be either disconnected or converted to other BellSouth services. DPI-Teleconnect may transition from Dark Fiber Loops to other available wholesale facilities provided by BellSouth, including special access, wholesale facilities obtained from other carriers, or self-provisioned facilities. For Conversions as defined in Section 15, such spreadsheets shall take the place of an LSR or ASR. The Parties shall negotiate a project schedule for the Conversion of the Embedded Base Dark Fiber Loops. If DPI-Teleconnect chooses to convert the Dark Fiber UNE Loops to special access circuits, BellSouth will include such Dark Fiber Loops once converted within DPI-Teleconnect's total special access circuits and apply any discounts to which DPI-Teleconnect is entitled.

2.2.6.1 If DPI-Teleconnect submits the spreadsheets specified in Section 2.2.6 above for all of its Embedded Base on or before September 10, 2006, Conversions shall be subject to Commission-approved switch-as-is charges and no UNE disconnect charges.

2.2.6.2 If DPI-Teleconnect fails to submit the spreadsheet(s) specified in Section 2.2.6 above for all of its Embedded Base on or before September 10, 2006, BellSouth will identify DPI-Teleconnect's remaining Embedded Base, if any, and will transition such circuits to the equivalent tariffed BellSouth service(s). Those circuits identified and transitioned by BellSouth pursuant to this Section 2.2.6.2 shall be subject to all applicable disconnect charges as set forth in this Agreement and the full nonrecurring charges for installation of the equivalent tariffed BellSouth service as set forth in BellSouth's tariffs.

2.2.6.3 For Embedded Base circuits converted or transitioned, the applicable recurring tariff charge shall apply to each circuit as of September 11, 2006. The transition of the Embedded Base circuits should be performed in a manner that avoids, or otherwise minimizes to the extent possible, disruption or degradation to DPI-Teleconnect's customers' service.

3. Dedicated Transport and Dark Fiber Transport

3.1 Dedicated Transport. Dedicated Transport is defined as BellSouth's transmission facilities between wire centers or switches owned by BellSouth, or between wire centers or switches owned by BellSouth and switches owned by DPI-Teleconnect, including but not limited to DS1, DS3 and OCn level services, as well as dark fiber, dedicated to DPI-Teleconnect. BellSouth shall not be required to provide access to OCn level Dedicated Transport under any circumstances pursuant to this Agreement. In addition, except as set forth in Section 3.2, BellSouth shall not be required to provide to DPI-Teleconnect unbundled access to interoffice transmission facilities that do not connect a pair of wire centers or switches owned by BellSouth ("Entrance Facilities").

3.2 Transition for DS1 and DS3 Dedicated Transport Including DS1 and DS3 Entrance Facilities

3.2.1 For purposes of this Section 3.2, the Transition Period for the Embedded Base of DS1 and DS3 Dedicated Transport, Embedded Base Entrance Facilities and for Excess DS1 and DS3 Dedicated Transport, is the twelve (12) month period beginning March 11, 2005 and ending March 10, 2006.

3.2.2 For purposes of this Section 3.2, Embedded Base means DS1 and DS3 Dedicated Transport that were in service for DPI-Teleconnect as of March 11, 2005 in those wire centers that, as of such date, met the criteria set forth in Sections 3.2.5.1 or 3.2.5.2 below. Subsequent disconnects or loss of End Users shall be removed from the Embedded Base.

3.2.3 For purposes of this Section 3.2, Embedded Base Entrance Facilities means Entrance Facilities that were in service for DPI-Teleconnect as of March 11, 2005. Subsequent disconnects or loss of customers shall be removed from the Embedded Base.

3.2.4 For purposes of this Section 3.2, Excess DS1 and DS3 Dedicated Transport means those DPI-Teleconnect DS1 and DS3 Dedicated Transport facilities in service as of March 11, 2005, in excess of the caps set forth in Section 3.2.5.3. Subsequent disconnects and loss of End Users shall be removed from Excess DS1 and DS3 Loops.

3.2.5 Notwithstanding anything to the contrary in this Agreement, BellSouth shall make available Dedicated Transport as described in this Section 3.2 only for DPI-Teleconnect's Embedded Base during the Transition Period:

3.2.5.1 DS1 Dedicated Transport where both wire centers at the end points of the route contain 38,000 or more Business Lines or four (4) or more fiber-based collocators. (Tier 1 Wire Center)

3.2.5.2 DS3 Dedicated Transport where both wire centers at the end points of the route contain 24,000 or more Business Lines or three (3) or more fiber-based collocators (Tier 2 Wire Center).

3.2.5.3 DPI-Teleconnect may obtain a maximum of twelve (12) unbundled DS3 Dedicated Transport circuits on each route where DS3 Dedicated Transport is available as a Network Element, and a maximum of ten (10) unbundled DS1 Dedicated Transport circuits on each Route where there is no 251(c)(3) unbundling obligation for DS3 Dedicated Transport but for which impairment exists for DS1 Dedicated Transport.

3.2.6 The initial list of wire centers (Initial Wire Center List) meeting the criteria set forth in Sections 3.2.5.1 and 3.2.5.2 above, is set forth in Section 5.1.4 hereto. As of the effective date of this Amendment, no self-certification in any wire center set forth in the Initial Wire Center List is permitted.

3.2.7 Notwithstanding anything to the contrary in this Agreement, BellSouth shall make available Entrance Facilities only for <DPI-Teleconnect's Embedded Base Entrance Facilities and only during the Transition Period.

3.2.8 Transition Period Pricing. From March 11, 2005, through the completion of the Transition Period, BellSouth shall charge a rate for DPI-Teleconnect's Embedded Base of DS1 and DS3 Dedicated Transport and for DPI-Teleconnect's Excess DS1 and DS3 Dedicated Transport, as described in this Section 3.2, equal to the higher of:

3.2.8.1 115% of the rate paid for that element on June 15, 2004; or

3.2.8.2 115% of a new rate the Commission establishes, if any, between June 16, 2004 and March 11, 2005.

3.2.8.3 These rates shall be as set forth in Exhibit A to Attachment 2 of the Agreement and this Section 3.2.8.

3.2.8.4 From March 11, 2005, through the completion of the Transition Period, BellSouth shall charge a rate for DPI-Teleconnect's Embedded Base Entrance Facilities as set forth in Exhibit A to Attachment 2 of the Agreement and this Section 3.2.8.

3.2.9 The Transition Period shall apply only to (1) DPI-Teleconnect's Embedded Base circuits and Embedded Base Entrance Facilities; and (2) DPI-Teleconnect's Excess DS1 and DS3 Dedicated Transport. DPI-Teleconnect shall not add new Entrance Facilities pursuant to this Agreement. Further, DPI-Teleconnect shall not add new DS1 or DS3 Dedicated Transport as described in this Section 3.2 pursuant to this Agreement.

3.2.10 A wire center listed on the Initial Wire Center List exceeds either of the thresholds set forth in Sections 3.2.5.1 or 3.2.5.2. No further DS1 Dedicated Transport Unbundling will be required from that wire center to other Tier 1 wire centers.

3.2.11 A wire center listed on the Initial Wire Center List exceeds either of the thresholds set forth in Sections 3.2.5.1 or 3.2.5.2. No further DS3 Dedicated Transport unbundling will be required from that wire center to Tier 1 or Tier 2 wire centers.

3.2.12 No later than March 10, 2006 DPI-Teleconnect shall submit spreadsheet(s) identifying all of the Embedded Base circuits, Embedded Base Entrance Facilities, and Excess DS1 and DS3 Dedicated Transport to be either disconnected or converted to other BellSouth services pursuant to Section 15. DPI-Teleconnect may transition from these DS1 and DS3 Dedicated Transport, Entrance Facilities, and Excess DS1 and DS3 Dedicated Transport arrangements to other available wholesale arrangements provided by BellSouth, wholesale facilities obtained from other carriers, or self-provisioned facilities. For Conversions as defined in Section 15, such spreadsheet shall take the place of an LSR or ASR. If a DPI-Teleconnect chooses to convert the DS1 and DS3 UNE Dedicated Transport circuits or UNE Entrance Facilities to special access circuits, BellSouth will include such DS1 and DS3 UNE Dedicated Transport circuits and UNE Entrance Facilities once converted within DPI-Teleconnect's total special access circuits and apply any discounts to which DPI-Teleconnect is entitled. The Parties shall negotiate a project schedule for the Conversion of the Embedded Base, Embedded Base Entrance Facilities, and Excess DS1 and DS3 Dedicated Transport.

3.2.12.1 If DPI-Teleconnect submits the spreadsheets specified in Section 3.2.12 above for all of its Embedded Base on or before March 10, 2006, Conversions shall be subject to Commission-approved switch-as-is charges.

3.2.12.2 If DPI-Teleconnect fails to submit the spreadsheet(s) specified in Section 3.2.12 above for all of its Embedded Base circuits, Embedded Base Entrance Facilities and Excess DS1 and DS3 Dedicated Transport on or before March 10, 2006, BellSouth will identify DPI-Teleconnect's remaining Embedded Base circuits, Embedded Base

Entrance Facilities and Excess DS1 and DS3 Dedicated Transport, if any, and will transition such circuits to the equivalent tariffed BellSouth service(s). Those circuits identified and transitioned by BellSouth shall be subject to all applicable disconnect charges as set forth in this Agreement and the full nonrecurring charges for installation of the equivalent tariffed BellSouth service as set forth in BellSouth's tariffs.

3.2.12.3 For Embedded Base circuits, Embedded Base Entrance Facilities and Excess DS1 and DS3 Dedicated Transport converted or transitioned, the applicable recurring tariff charge shall apply to each circuit as of March 11, 2006. The transition of the Embedded Base, Embedded Base Entrance Facilities and Excess DS1 and DS3 Dedicated Transport should be performed in a manner that avoids, or otherwise, minimizes to the extent possible, disruption or degradation to DPI-Teleconnect's customers' service.

3.3 Dark Fiber Transport. Dark Fiber Transport is defined as Dedicated Transport that consists of unactivated optical interoffice transmission facilities without attached signal regeneration, multiplexing, aggregation or other electronics. Except as set forth in Section 3.3.1 below, BellSouth shall not be required to provide access to Dark Fiber Transport Entrance Facilities pursuant to this Agreement.

3.3.1 <u>Transition for Dark Fiber Transport and Dark Fiber Transport Entrance Facilities</u>

3.3.2 For purposes of this Section 3.3, the Transition Period for the Embedded Base Dark Fiber Transport and Embedded Base Dark Fiber Entrance Facilities is the eighteen (18) month period beginning March 11, 2005 and ending September 10, 2006.

3.3.3 For purposes of this Section 3.3, Embedded Base means Dark Fiber Transport that was in service for DPI-Teleconnect as of March 11, 2005 in those wire centers that, as of such date, met the criteria set forth in 3.3.6 below. Subsequent disconnects or loss of End Users shall be removed from the Embedded Base.

3.3.4 For purposes of this Section 3.3, Embedded Base Dark Fiber Entrance Facilities means Fiber Entrance Facilities that were in service for DPI-Teleconnect as of March 11, 2005 in those wire centers that, as of such date, met the criteria set forth in 3.3.6 below. Subsequent disconnects or loss of End Users shall be removed from the Embedded Base.

3.3.5 Notwithstanding anything to the contrary in this Agreement, BellSouth shall make available Dark Fiber Transport as described in this Section 3.3 only for DPI-Teleconnect's Embedded Base during the Transition Period:

3.3.6 Dark Fiber Transport where both wire centers at the end points of the route contain twenty-four thousand (24,000) or more Business Lines or three (3) or more fiber-based collocators. (Tier 2 Wire Center)

3.3.7 The initial list of wire centers (Initial Wire Center List) meeting the criteria set forth in Section 3.3.6 above, is set forth in Section 5.1.4 hereto. As of the effective date of this Amendment, no self-certification in any wire center set forth in the Initial Wire Center List is permitted.

3.3.8 Transition Period Pricing. From March 11, 2005, through the completion of the Transition Period, BellSouth shall charge a rate for DPI-Teleconnect's Embedded Base and Embedded Base Dark Fiber Entrance Facilities shall be equal to the higher of:

3.3.8.1 115% of the rate paid for that element on June 15, 2004; or

3.3.8.2 115% of a new rate the Commission establishes, if any, between June 16, 2004 and March 11, 2005.

3.3.8.3 These rates shall be as set forth in Exhibit A Attachment 2 of the Agreement and this Section 3.3.8.

3.3.8.4 From March 11, 2005, through the completion of the Transition Period, BellSouth shall charge a rate for DPI-Teleconnect's Embedded Base Entrance Facilities as set forth in this Section 3.3.8.

3.3.9 The Transition Period shall apply only to DPI-Teleconnect's Embedded Base of Dark Fiber Transport and Dark Fiber Entrance Facilities. DPI-Teleconnect shall not add new Dark Fiber Transport as described in this Section 3.3. DPI-Teleconnect shall not add new Dark Fiber Entrance Facilities pursuant to this Agreement.

3.3.10 Wire Centers listed on the Initial List exceed the threshold set forth in Section 3.3.6, BellSouth will not be required to provide DPI-Teleconnect future access to Dark Fiber Transport from those wire centers.

3.3.11 No later than September 10, 2006 DPI-Teleconnect shall submit spreadsheet(s) identifying all of the Embedded Base of Dark Fiber Transport and Dark Fiber Entrance Facilities to be either disconnected or converted to other BellSouth services as Conversions pursuant to Section 15. DPI-Teleconnect may transition from these Dark Fiber Transport and Dark Fiber Entrance Facilities to other available wholesale arrangements provided by BellSouth, wholesale facilities obtained from other carriers, or self-provisioned facilities. For Conversions as defined in Section 15, such spreadsheet shall take the place of an LSR or ASR. If a DPI-Teleconnect chooses to convert the Dark Fiber UNE Transport circuits and Dark Fiber Entrance Facilities to special access circuits, BellSouth will include such Dark Fiber UNE Transport circuits and Dark Fiber UNE Entrance Facilities once converted within DPI-Teleconnect's total special access circuits and apply any discounts to which DPI-Teleconnect is entitled. The Parties shall negotiate a project schedule for the Conversion of the Embedded Base of Dark Fiber Transport and Dark Fiber Entrance Facilities.

3.3.11.1 If DPI-Teleconnect submits the spreadsheets specified in Section 3.3.11 for all of its Embedded Base of Dark Fiber Transport and Dark Fiber Entrance Facilities on or before September 10, 2006, Conversions shall be subject to Commission-approved switch-as-is charges.

3.3.11.2 If DPI-Teleconnect fails to submit the spreadsheet(s) for all of its Embedded Base of Dark Fiber Transport and Dark Fiber Entrance Facilities prior to September 10, 2006, BellSouth will identify DPI-Teleconnect's remaining Embedded Base of Dark Fiber Transport and Dark Fiber Entrance Facilities, if any, and will transition such circuits to the equivalent tariffed BellSouth service(s). Those circuits identified and transitioned by BellSouth shall be subject to all applicable UNE disconnect charges as set forth in this Agreement and the full nonrecurring charges for installation of the equivalent tariffed BellSouth service as set forth in BellSouth's tariffs.

3.3.11.3 For Embedded Base Dark Fiber Transport and Embedded Base Dark Fiber Entrance Facilities converted or transitioned, the applicable recurring tariff charge shall apply to each circuit as of September 11, 2006. The transition of the Embedded Base Dark Fiber Transport and Embedded Base Dark Fiber Entrance Facilities should be performed in a manner that avoids, or otherwise, minimizes to the extent possible, disruption or degradation to DPI-Teleconnect's customers' service.

4. Loops/Transport

4.1 Language to implement BellSouth's obligation to provide § 251 unbundled access to high capacity loops and dedicated transport is included under Issue 1.

4.2 (i) Business Line

4.2.1 For purposes of this Amendment, a "Business Line" is, as defined in 47 C.F.R. § 51.5, a BellSouth-owned switched access line used to serve a business customer, whether by BellSouth itself or by a CLEC that leases the line from BellSouth. The number of business lines in a wire center shall equal the sum of all BellSouth business switched access lines, plus the sum of all UNE loops connected to that wire center, including UNE loops provisioned in combination with other unbundled elements. Among these requirements, business line tallies (1) shall include only those access lines connecting end-user customers with BellSouth end-offices for switched services, (2) shall not include non-switched special access lines, (3) shall account for ISDN and other digital access lines by counting each 64 kbps-equivalent as one line. For example, a DS1 line corresponds to 24 64 kbps-equivalents, and therefore to 24 "business lines."

4.3 (ii) Fiber-Based Collocation

4.3.1 For purposes of this Amendment a "Fiber-Based Collocator" is, as defined in 47 C.F.R. § 51.5, any carrier, unaffiliated with BellSouth, that maintains a collocation arrangement in a BellSouth wire center, with active electrical power supply, and operates a fiber-optic cable or comparable transmission facility that (1) terminates at a collocation arrangement within the wire center; (2) leaves the BellSouth wire center premises; and (3) is owned by a party other than BellSouth or any affiliate of BellSouth, except as set forth in this paragraph. Dark fiber obtained from an incumbent LEC on an indefeasible right of use basis shall be treated as non-incumbent LEC fiber-optic cable. Two or more affiliated fiber-based collocators in a single wire center shall collectively be counted as a single fiber-based collocator. For purposes of this paragraph, the term affiliate is defined by 47 U.S.C. § 153(1) and any relevant interpretation in this Title.

4.4 (iii) Building

4.4.1 For purposes of this Amendment, a "Building" is a permanent physical structure including, but not limited to, a structure in which people reside, or conduct business or work on a daily basis and through which there is one centralized point of entry in the structure through which all telecommunications services must transit. As an example only, a high rise office building with a general telecommunications equipment room through which all telecommunications services to that building's

tenants must pass would be a single "building" for purposes of this Amendment. Two or more physical areas served by individual points of entry through which telecommunications services must transit will be considered separate buildings. For instance, a strip mall with individual businesses obtaining telecommunication services from different access points on the building(s) will be considered individual buildings, even though they might share common walls.

4.5 (iv) Route

4.5.1 The definition of a route is as defined in Section 3.1 of this Exhibit A.

5.1 Procedures For Additional Designations Of "Non-Impaired" Wire Centers

5.1.1 If BellSouth seeks to designate additional wire centers as "non-impaired" for purposes of the FCC's Triennial Review Remand Order (TRRO), BellSouth will post a Carrier Notification Letter (CNL) designating any new (additional) "non-impaired" wire centers ("subsequent wire centers"). The list of additional "non-impaired" wire centers as designated by BellSouth will reflect the number of Business Lines, as of December 31 of the previous year, and will also reflect the number of fiber-based collocators in each subsequent wire center on the list at the time of BellSouth's designation.

5.1.2 Designation by BellSouth of additional "non-impaired" wire centers will be based on the following criteria:

a. The CLLI of the wire center.
b. The number of switched business lines served by BellSouth in that wire center based upon data as reported in ARMIS 43-08 for the previous year.
c. The sum of all UNE Loops connected to each wire center, including UNE Loops provisioned in combination with other elements.
d. A completed worksheet that shows, in detail, any conversion of access lines to voice grade equivalents.
e. The names of any carriers relied upon as fiber-based collocators.

5.1.3 BellSouth and DPI-Teleconnect agree to resolve disputes concerning BellSouth's additional wire center designations in dispute resolution proceedings before the Commission.

5.1.4 The initial wire center list is shown below.

WIRE CENTER	BUSINESS LINES	FIBER-BASED COLLOCATION	TRANSPORT TIER	LOOP UNBUNDLING
MIAMFLPL	86,923	>4	1	No DS1/3
MIAMFLGR	68,580	>4	1	No DS1/3
ORLDFLMA	57,966	>4	1	No DS3
FTLDFLMR	55,881	>4	1	No DS3
GSVLFLMA	55,681	4	1	No DS3
ORLDFLPC	45,792	>4	1	No DS3
MIAMFLHL	43,021	>4	1	No DS3
JCVLFLCL	42,452	>4	1	No DS3
MIAMFLAE	41,912	>4	1	No DS3
BCRTFLMA	40,746	>4	1	No DS3
PRRNFLMA	37,969	3	2	
HLWDFLPE	37,415	4	1	
WPBHFLHH	36,053	3	2	
HLWDFLWH	34,022	--	2	
PMBHFLMA	33,993	4	1	
WPBHFLAN	33,521	4	1	
ORLDFLPH	33,148	4	1	
MLBRFLMA	32,547	4	1	
DYBHFLMA	32,282	>4	1	
FTLDFLCY	31,487	4	1	
ORLDFLAP	31,234	3	2	
PNSCFLFP	30,863	--	2	
FTLDFLPL	29,469	>4	1	
FTLDFLJA	29,209	>4	1	
PNSCFLBL	28,685	4	1	
BCRTFLBT	26,601	--	2	
WPBHFLGR	26,527	3	2	
ORLDFLSA	26,126	>4	1	
PMBHFLFE	25,909	4	1	
STRTFLMA	25,577	--	2	
WPBHFLGA	24,885	--	2	
MIAMFLRR	24,740	3	2	
DRBHFLMA	24,695	1	2	
MIAMFLBR	24,482	--	2	
MIAMFLPB	24,380	4	1	
JCVLFLSJ	24,088	3	2	
MIAMFLSO	23,802	3	2	
MIAMFLWM	23,310	4	1	
FTLDFLOA	23,008	>4	1	
MIAMFLCA	22,645	3	2	

WIRE CENTER	BUSINESS LINES	FIBER-BASED COLLOCATION	TRANSPORT TIER	LOOP UNBUNDLING
ORLDFLCL	20,828	>4	1	
MNDRFLLO	20,180	3	2	
NDADFLGG	18,239	>4	1	
COCOFLMA	18,097	4	1	
JCVLFLSM	17,820	>4	1	
WPBHFLLE	13,622	3	2	

6. 2-wire or 4-wire HDSL-Compatible Loop. This is a designed Loop that meets Carrier Serving Area (CSA) specifications, may be up to 12,000 feet long and may have up to 2,500 feet of bridged tap (inclusive of Loop length). It may be a 2-wire or 4-wire circuit and will come standard with a test point, OC, and a DLR.

7. 4-wire Unbundled DS1 Digital Loop. This is a designed 4-wire Loop that is provisioned according to industry standards for DS1 or Primary Rate ISDN services and will come standard with a test point, OC, and a DLR. A DS1 Loop may be provisioned over a variety of loop transmission technologies including copper, HDSL-based technology or fiber optic transport systems. It will include a 4-wire DS1 Network Interface at the End User's location. For purposes of this Amendment, including the transition of DS1 and DS3 Loops described in Section 1 above, DS1 Loops include 2-wire and 4-wire HDSL Compatible Loops.

8. Except to the extent expressly provided otherwise in this Attachment, DPI-Teleconnect may not maintain unbundled network elements or combinations of unbundled network elements, that are no longer offered pursuant to this Agreement (collectively "Arrangements"). In the event BellSouth determines that DPI-Teleconnect has in place any Arrangements after the Effective Date of this Agreement, BellSouth will provide DPI-Teleconnect with thirty (30) calendar days written notice to disconnect or convert such Arrangements. Those circuits identified by DPI-Teleconnect within such thirty (30) day period shall be subject to Commission-approved switch-as-is rates with no UNE disconnect charges. If DPI-Teleconnect fails to submit orders to disconnect or convert such Arrangements within such thirty (30)-day period, BellSouth will transition such circuits to the equivalent tariffed BellSouth service(s). Those circuits identified and transitioned by BellSouth shall be subject to all applicable UNE disconnect charges as set forth in this Agreement and the full nonrecurring charges for installation of the equivalent tariffed BellSouth service as set forth in BellSouth's tariffs. The applicable recurring tariff charges shall apply to each circuit beginning the day following the thirty (30)-day notice period.

9. Self-Certification. Prior to submitting an order pursuant to this Agreement for high capacity (DS1 or above) Dedicated Transport or high capacity Loops, DPI-Teleconnect shall undertake a reasonably diligent inquiry to determine whether DPI-Teleconnect is entitled to unbundled access to such Network Elements in accordance with the terms of this Agreement. By submitting any such order, DPI-Teleconnect self-certifies that to the best of DPI-Teleconnect's knowledge, the high capacity Dedicated Transport or high capacity Loop requested is available as a Network Element pursuant to this Agreement. Upon receiving such order, BellSouth shall process the request in reliance upon DPI-Teleconnect's self-certification. To the extent BellSouth believes that such request does not comply with the terms of this Agreement, BellSouth shall seek dispute resolution in accordance with the General Terms and Conditions of this Agreement. In the event such dispute is resolved in BellSouth's favor, BellSouth shall bill DPI-Teleconnect the difference between the rates for such circuits pursuant to this Agreement and the applicable nonrecurring and recurring charges for the equivalent tariffed service from the date of installation to the date the circuit is transitioned to the equivalent tariffed service. Within thirty (30) calendar days following a decision finding in BellSouth's favor, DPI-Teleconnect shall submit a spreadsheet identifying those non-compliant circuits to be transitioned to tariffed services or disconnected.

10. In the event that (1) BellSouth designates a wire center as non-impaired, (2) DPI-Teleconnect converts existing UNEs to other services or orders new services as services other than UNEs, (3) DPI-Teleconnect otherwise would have been entitled to UNEs in such wire center at the time alternative services provisioned, and (4)

BellSouth acknowledges or a state or federal agency regulatory body with authority determines that, at the time BellSouth designated such wire center as non-impaired, such wire center did not meet the FCC's non-impairment criteria, then upon request of DPI-Teleconnect, BellSouth shall transition to UNEs any alternative services in such wire center that were established after such wire center was designated as non-impaired. In such instances, BellSouth shall refund DPI-Teleconnect the difference between the rate paid by DPI-Teleconnect for such services and the applicable UNE rate, including but not limited to any charges associated with the unnecessary conversion from UNE to other wholesale services.

11. Modifications and Updates to the Wire Center List and Subsequent Transition Periods

11.1 <u>DS1 or DS3 loops, or Dedicated Transport in Wire Centers that Meet the TRRO Non-Impaired Criteria in the Future</u>

11.2 In the event BellSouth identifies additional wire centers that meet the criteria set forth in Sections 1.4.1 (DS1 loops), 1.4.2 (DS3 loops), 3.2.5.1 (DS1 transport) and 3.2.5.2 (DS3 transport) but that were not included in the Initial Wire Center List, BellSouth shall include such additional wire centers in a carrier notification letter (CNL). Each such list of additional wire centers shall be considered a "Subsequent Wire Center List."

11.3 Effective thirty (30) calendar days after the date of a BellSouth CNL providing a Subsequent Wire Center List, BellSouth shall not be required to unbundle new DS1 or DS3 Loops, or transport, as applicable, in such additional wire center(s), except pursuant to the self-certification process.

11.4 BellSouth shall make available de-listed DS1 and DS3 Loops and transport that were in service for DPI-Teleconnect in a de-listed wire center on the Subsequent Wire Center List as of the thirtieth (30th) calendar day after the date of BellSouth's CNL identifying the Subsequent Wire Center List (Subsequent Embedded Base) until one hundred and eighty (180) calendar days after the thirtieth (30th) calendar day from the date of BellSouth's CNL identifying the Subsequent Wire Center List (Subsequent Transition Period).

11.5 Subsequent disconnects or loss of End Users shall be removed from the Subsequent Embedded Base.

11.6 The rates that shall apply to the Subsequent Embedded Base throughout the entire Subsequent Transition Period. The rates shall equal the rate paid for that element at the time of the CNL posting, plus 15%.

11.7 No later than one hundred and eighty (180) calendar days from BellSouth's CNL identifying the Subsequent Wire Center List, DPI-Teleconnect shall submit a spreadsheet(s) identifying the Subsequent Embedded Base of circuits to be disconnected or converted to other BellSouth services. For Conversions as defined in Section 15, such spreadsheets shall take the place of an LSR or ASR. The Parties shall negotiate a project schedule for the Conversion of the Subsequent Embedded Base of circuits. If a DPI-Teleconnect chooses to convert the de-listed DS1 and DS3

Loops and Transport to special access circuits, BellSouth will include such de-listed DS1 and DS3 Loops and Transport once converted within DPI-Teleconnect's total special access circuits and apply any discounts to which DPI-Teleconnect is entitled. The Parties shall negotiate a project schedule for the Conversion of the Subsequent Embedded Base.

11.7.1 If DPI-Teleconnect submits the spreadsheet(s) for its Subsequent Embedded Base by one hundred and eighty (180) calendar days from BellSouth's CNL identifying the Subsequent Wire Center List, those identified circuits shall be subject to the Commission-approved switch-as-is conversion nonrecurring charges.

11.7.2 If DPI-Teleconnect fails to submit the spreadsheet(s) for all of its Subsequent Embedded Base by one hundred and eighty (180) calendar days after the date of BellSouth's CNL identifying the Subsequent Wire Center List, BellSouth will identify DPI-Teleconnect's remaining Subsequent Embedded Base, if any, and will transition such circuits to the equivalent tariffed BellSouth service(s). Those circuits identified and transitioned by BellSouth shall be subject to the applicable disconnect charges as set forth in this Agreement and the full nonrecurring charges for installation of the equivalent tariffed BellSouth service as set forth in BellSouth's tariffs.

11.7.3 For Subsequent Embedded Base circuits converted or transitioned, the applicable recurring tariff charges shall apply on the first day after the end of the Subsequent Transition Period. The transition of the Subsequent Embedded Base circuits should be performed in a manner that avoids, or otherwise minimizes to the extent possible, disruption or degradation to DPI-Teleconnect's customers' service.

11.8 <u>Dark Fiber Transport in Wire Centers that Meet the TRRO Non-Impaired Criteria in the Future</u>

11.8.1 In the event BellSouth identifies additional wire centers that meet the criteria set forth in Section 3.3.6 above, but that were not included in the Initial Wire Center List, BellSouth shall include such additional wire centers in a CNL. Each such list of additional wire centers shall be considered a "Subsequent Wire Center List."

11.8.2 Effective thirty (30) calendar days after the date of a BellSouth CNL providing a Subsequent Wire Center List, BellSouth shall not be required to unbundle new Dark Fiber Transport, as applicable, in such additional wire center(s), except pursuant to the self-certification process as set forth in Section 9 above.

11.8.3 For purposes of Section 11.8, BellSouth shall make available dark fiber transport that was in service for DPI-Teleconnect in a wire center on the Subsequent Wire Center List as of the thirtieth (30th) calendar day after the date of BellSouth's CNL identifying the Subsequent Wire Center List (Subsequent Embedded Base) until two hundred and seventy (270) calendar days after the thirtieth (30th) calendar day from the date of BellSouth's CNL identifying the Subsequent Wire Center List (Subsequent Transition Period).

11.8.4 Subsequent disconnects or loss of End Users shall be removed from the Subsequent Embedded Base.

11.8.5 The rates that shall apply to the Subsequent Embedded Base throughout the entire Subsequent Transition Period. The rates shall equal the rate paid for that element at the time of the CNL posting, plus 15%.

11.8.6 No later than two hundred and seventy (270) calendar days from BellSouth's CNL identifying the Subsequent Wire Center List DPI-Teleconnect shall submit a spreadsheet(s) identifying the Subsequent Embedded Base of circuits to be disconnected or converted to other BellSouth services. For Conversions as defined in Section 15, such spreadsheets shall take the place of an LSR or ASR. The Parties shall negotiate a project schedule for the Conversion of the Subsequent Embedded Base of circuits. If a DPI-Teleconnect chooses to convert the Dark Fiber Transport to special access circuits, BellSouth will include such Dark Fiber Transport once converted within DPI-Teleconnect's total special access circuits and apply any discounts to which DPI-Teleconnect is entitled. The Parties shall negotiate a project schedule for the Conversion of the Subsequent Embedded Base.

11.8.6.1 If DPI-Teleconnect submits the spreadsheet(s) for its Subsequent Embedded Base within two hundred and seventy (270) calendar days from BellSouth's CNL identifying the Subsequent Wire Center List, those identified circuits shall be subject to the Commission-approved switch-as-is conversion nonrecurring charges are applicable

11.8.6.2 If DPI-Teleconnect fails to submit the spreadsheet(s) for all of its Subsequent Embedded Base within two hundred and seventy (270) calendar days after the date of BellSouth's CNL identifying the Subsequent Wire Center List, BellSouth will identify DPI-Teleconnect's remaining Subsequent Embedded Base, if any, and will transition such circuits to the equivalent tariffed BellSouth service(s). Those circuits identified and transitioned by BellSouth shall be subject to the applicable disconnect charges as set forth in this Agreement and the full nonrecurring charges for installation of the equivalent tariffed BellSouth service as set forth in BellSouth's tariffs.

11.8.7 For Subsequent Embedded Base circuits converted or transitioned, the applicable recurring tariff charges shall apply on the first day after the end of the Subsequent Transition Period. The transition of the Subsequent Embedded Base circuits should be performed in a manner that avoids, or otherwise, minimizes to the extent possible, disruption or degradation to DPI-Teleconnect's customers' service.

12. DPI-Teleconnect may purchase and use Network Elements and Other Services from BellSouth in accordance with 47 C.F.R §51.309. Performance Measurements associated with this Attachment 2 are contained in Attachment 9. The quality of the Network Elements provided pursuant to §251, as well as the quality of the access to said Network Elements that BellSouth provides to DPI-Teleconnect, shall be, to the extent technically feasible, at least equal to that which BellSouth provides to itself, and its affiliates.

13. The Parties shall comply with the requirements as set forth in the technical references within this Attachment 2. BellSouth shall comply with the requirements set forth in the technical reference TR73400, as well as any performance or other requirements identified in this Agreement, to the extent that they are consistent with the greater of BellSouth's actual performance or applicable industry standards. If one or more of the requirements set forth in this Agreement are in conflict, the technical reference TR73600 requirements shall apply. If the parties cannot reach agreement, the dispute resolution process set forth in the General Terms and Conditions of this Agreement shall apply.

14. Commingling of Services

14.1 Commingling means the connecting, attaching, or otherwise linking of a Network Element, or a Combination, to one or more Telecommunications Services or facilities that DPI-Teleconnect has obtained at wholesale from BellSouth, or the combining of a Network Element or Combination with one or more such wholesale Telecommunications Services or facilities. The wholesale services that can be commingled with Network Elements or a Combination do not include network elements required to be unbundled under Section 271. DPI-Teleconnect must comply with all rates, terms or conditions applicable to such wholesale Telecommunications Services or facilities.

14.2 Subject to the limitations set forth elsewhere in this Attachment, BellSouth shall not deny access to a Network Element or a Combination on the grounds that one or more of the elements: 1) is connected to, attached to, linked to, or combined with such a facility or service obtained from BellSouth; or 2) shares part of BellSouth's network with access services or inputs for mobile wireless services and/or interexchange services.

14.3 Unless expressly prohibited by the terms of this Attachment, BellSouth shall permit DPI-Teleconnect to Commingle an unbundled Network Element or a Combination of unbundled Network Elements with wholesale services obtained from BellSouth. For purposes of example only, DPI-Teleconnect may Commingle unbundled Network Elements or Combinations of unbundled Network Elements with wholesale services including switched and special access services, or services purchased under resale arrangements with BellSouth.

14.4 Unless otherwise agreed to by the Parties, the Network Element portion of a commingled circuit will be billed at the rates set forth in this Agreement and the remainder of the circuit or service will be billed in accordance with BellSouth's tariffed rates or rates set forth in that separate agreement.

14.5 When multiplexing equipment is attached to a commingled arrangement, the multiplexing equipment will be billed from the same agreement or the tariff as the higher bandwidth circuit. Central Office Channel Interfaces (COCI) will be billed from the same agreement or tariff as the lower bandwidth circuit.

14.6 Terms and conditions for order cancellation charges and Service Date Advancement Charges will apply in accordance with Attachment 6 and are incorporated herein by this reference. The charges shall be as set forth in Exhibit A to Attachment 2 of the Agreement and Exhibit B hereto.

15. Conversion of Wholesale Services to Network Elements or Network Elements to Wholesale Services

15.1 Upon request, BellSouth shall convert a wholesale service, or group of wholesale services, to the equivalent Network Element or Combination that is available to DPI-Teleconnect pursuant to Section 251 of the Act and under this Agreement, or convert a Network Element or Combination that is available to DPI-Teleconnect pursuant to Section 251 of the Act and under this Agreement to an equivalent wholesale service or group of wholesale services offered by BellSouth (collectively "Conversion"). BellSouth shall charge the applicable nonrecurring switch-as-is rates for Conversions to specific Network Elements or Combinations found in Exhibit A. BellSouth shall also charge the same nonrecurring switch-as-is rates when converting from Network Elements or Combinations. Any rate change resulting from the Conversion will be effective as of the next billing cycle following BellSouth's receipt of a complete and accurate Conversion request from DPI-Teleconnect. A Conversion shall be considered termination for purposes of any volume and/or term commitments and/or grandfathered status between DPI-Teleconnect and BellSouth. Any change from a wholesale service/group of wholesale services to a Network Element/Combination, or from a Network Element/Combination to a wholesale service/group of wholesale services that requires a physical rearrangement will not be considered to be a Conversion for purposes of this Agreement. BellSouth will not require physical rearrangements if the Conversion can be completed through record changes only. Orders for Conversions will be handled in accordance with the guidelines set forth in the Ordering Guidelines and Processes and CLEC Information Packages as referenced in Section 15.3 below.

15.2 Any outstanding conversions shall be effective on or after the effective date of this agreement.

15.3 Ordering Guidelines and Processes

15.3.1 For information regarding Ordering Guidelines and Processes for various Network Elements, Combinations and Other Services, DPI-Teleconnect should refer to the "Guides" section of the BellSouth Interconnection Web site.

15.3.2 Additional information may also be found in the individual CLEC Information Packages located at the "CLEC UNE Products" on BellSouth's Interconnection Web site at: www.interconnection.bellsouth.com/guides/html/unes.html.

15.3.3 The provisioning of Network Elements, Combinations and Other Services to DPI-Teleconnect's Collocation Space will require cross-connections within the central office to connect the Network Element, Combinations or Other Services to the demarcation point associated with DPI-Teleconnect's Collocation Space. These cross-connects are separate components that are not considered a part of the Network Element, Combinations or Other Services and, thus, have a separate charge pursuant to this Agreement.

15.3.4 Any pending conversions shall be effective on the effective date of this agreement.

16. Line Splitting

16.1 Line splitting shall mean that DPI-Teleconnect purchases a whole loop and provides the splitter to provide voice and data services through an arrangement with a third party CLEC, who is either the provider of data services (Data CLEC) or the provider of voice services (Voice CLEC), to deliver voice and data service to End Users over the same Loop. The Voice CLEC and Data CLEC are different carriers, with DPI-Teleconnect being either the Voice CLEC or Data CLEC.

16.2 Line Splitting – UNE-L. In the event DPI-Teleconnect provides its own switching or obtains switching from a third party, DPI-Teleconnect may engage in line splitting arrangements with another CLEC using a splitter, provided by DPI-Teleconnect, in a Collocation Space at the central office where the loop terminates into a distribution frame or its equivalent.

16.3 Provisioning Line Splitting and Splitter Space – UNE-L

16.3.1 **DPI-Teleconnect** provides the splitter when providing Line Splitting with UNE-L. When DPI-Teleconnect or its authorized agent owns the splitter, Line Splitting requires the following: a loop from NID at the End User's location to the serving wire center and terminating into a distribution frame or its equivalent.

16.4 CLEC Provided Splitter – Line Splitting –UNE-L

16.4.1 To order High Frequency Spectrum on a particular Loop, DPI-Teleconnect or its authorized agent must have a DSLAM collocated in the central office that serves the End User of such Loop.

16.4.2 DPI-Teleconnect or its authorized agent may purchase, install and maintain central office POTS splitters in its collocation arrangements. DPI-Teleconnect or its authorized agent may use such splitters for access to its customers and to provide digital line subscriber services to its customers using the High Frequency Spectrum. Existing Collocation rules and procedures and the terms and conditions relating to Collocation set forth in Attachment 4-Central Office shall apply.

16.4.3 Any splitters installed by DPI-Teleconnect or its authorized agent in its collocation arrangement shall comply with ANSI T1.413, Annex E, or any future ANSI splitter Standards. DPI-Teleconnect or its authorized agent may install any splitters that BellSouth deploys or permits to be deployed for itself or any BellSouth affiliate.

16.5 Maintenance – Line Splitting –UNE-L

16.5.1 BellSouth will be responsible for repairing voice troubles and the troubles with the physical loop between the NID at the End User's premises and the termination point.

16.5.2 BellSouth must make all necessary network modifications, including providing nondiscriminatory access to operations support systems necessary for pre-ordering, ordering, provisioning, maintenance and repair, and billing for loops used in line splitting arrangements. BellSouth may use existing state commission collaboratives

and change management processes to address OSS modifications that are necessary to support line splitting.

16.6 Indemnity

16.6.1 DPI-Teleconnect shall indemnify, defend and hold harmless BellSouth from and against any Claims, Losses, and Costs, which arise out of actions related to the other service provider (i.e., CLEC party to the line splitting arrangement who is not DPI-Teleconnect), except to the extent caused by BellSouth's gross negligence or willful misconduct.

16.6.2 PROVIDED, HOWEVER, that all amounts advanced in respect of such Claims, Losses and Costs shall be repaid to DPI-Teleconnect by BellSouth if it shall ultimately be determined in a final judgment without further appeal by a court of appropriate jurisdiction that BellSouth is not entitled to be indemnified for such Claims, Losses and Costs because the Claims, Losses and Costs arose as a result of BellSouth's gross negligence or willful misconduct.

16.6.3 BellSouth will indemnify, defend and hold harmless DPI-Teleconnect from and against any Claims, Losses, and Costs, which arise out of actions related to the other service provider (i.e., CLEC party to the line splitting arrangement who is not DPI-Teleconnect) brought against DPI-Teleconnect to the extent such Claim alleges that the cause of Claim, Loss and Cost was the result of BellSouth's gross negligence or willful misconduct.

16.6.4 PROVIDED, HOWEVER, that BellSouth shall have no obligation to indemnify DPI-Teleconnect under this section unless: DPI-Teleconnect provides BellSouth with prompt written notice of any such Claim; DPI-Teleconnect permits BellSouth to assume and control the defense to such action, with counsel chosen by BellSouth; and BellSouth does not enter into any settlement or compromise of such Claim.

16.6.5 PROVIDED, HOWEVER, that all amounts advanced in respect of such Claims, Losses and Costs shall be repaid to BellSouth by DPI-Teleconnect if it shall ultimately be determined in a final judgment without further appeal by a court of appropriate jurisdiction that DPI-Teleconnect is not entitled to be indemnified for such Claims, Losses and Costs because the Claims, Losses and Costs did not arise as a result of BellSouth's gross negligence or willful misconduct.

16.6.6 "Claim" means any threatened, pending or completed action, suit or proceeding, or any inquiry or investigation that BellSouth or DPI-Teleconnect in good faith believes might lead to the institution of any such action, suit or proceeding.

16.6.7 "Loss" means any and all damages, injury, judgments, fines, penalties, amounts paid or payable in settlement, deficiencies, and expenses (including all interest, assessments, and other charges paid or payable in connection with or respect of such Losses) incurred in connection with the Claim.

16.6.8 "Costs" means all reasonable attorney's fees and all other reasonable fees, expenses and obligations paid or incurred in connection with the Claim or related matters, including without limitation, investigating, defending or participating (as a party, witness or otherwise) in (including on appeal), or preparing to defend or participate in any Claim.

17. 911 and E911 Databases

17.1 BellSouth shall provide DPI-Teleconnect with nondiscriminatory access to 911 and E911 databases on an unbundled basis, in accordance with 47 C.F.R. § 51.319 (f).

17.2 The ALI/DMS database contains End User information (including name, address, telephone information, and sometimes special information from the local service provider or End User) used to determine to which PSAP to route the call. The ALI/DMS database is used to provide enhanced routing flexibility for E911. DPI-Teleconnect will be required to provide the BellSouth 911 database vendor daily service order updates to E911 database in accordance with Section 17.3.1 below.

17.3 Technical Requirements

17.3.1 BellSouth's 911 database vendor shall provide DPI-Teleconnect the capability of providing updates to the ALI/DMS database through a specified electronic interface. DPI-Teleconnect shall contact BellSouth's 911 database vendor directly to request interface. DPI-Teleconnect shall provide updates directly to BellSouth's 911 database vendor on a daily basis. Updates shall be the responsibility of DPI-Teleconnect and BellSouth shall not be liable for the transactions between DPI-Teleconnect and BellSouth's 911 database vendor.

17.3.2 It is DPI-Teleconnect's responsibility to retrieve and confirm statistical data and to correct errors obtained from BellSouth's 911 database vendor on a daily basis. All errors will be assigned a unique error code and the description of the error and the corrective action is described in the CLEC Users Guide for Facility Based Providers that is found on the BellSouth Interconnection Web site.

17.3.3 DPI-Teleconnect shall conform to the BellSouth standards as described in the CLEC Users Guide to E911 for Facilities Based Providers that is located on the BellSouth's Interconnection Web site: www.interconnection.bellsouth.com/guides.

17.3.4 Stranded Unlocks are defined as End User records in BellSouth's ALI/DMS database that have not been migrated for over ninety (90) days to DPI-Teleconnect, as a new provider of local service to the End User. Stranded Unlocks are those End User records that have been "unlocked" by the previous local exchange carrier that provided service to the End User and are open for DPI-Teleconnect to assume responsibility for such records.

17.3.5 Based upon End User record ownership information available in the NPAC database, BellSouth shall provide a Stranded Unlock annual report to DPI-Teleconnect that

reflects all Stranded Unlocks that remain in the ALI/DMS database for over ninety (90) days. DPI-Teleconnect shall review the Stranded Unlock report, identify its End User records and request to either delete such records or migrate the records to DPI-Teleconnect within two (2) months following the date of the Stranded Unlock report provided by BellSouth. DPI-Teleconnect shall reimburse BellSouth for any charges BellSouth's database vendor imposes on BellSouth for the deletion of DPI-Teleconnect's records.

18. Fiber to the Home (FTTH) loops are local loops consisting entirely of fiber optic cable, whether dark or lit, serving an End User's premises or, in the case of predominantly residential multiple dwelling units (MDUs), a fiber optic cable, whether dark or lit, that extends to the MDU minimum point of entry (MPOE). Fiber to the Curb (FTTC) loops are local loops consisting of fiber optic cable connecting to a copper distribution plant that is not more than five hundred (500) feet from the End User's premises or, in the case of predominantly residential MDUs, not more than five hundred (500) feet from the MDU's MPOE. The fiber optic cable in a FTTC loop must connect to a copper distribution plant at a serving area interface from which every other copper distribution subloop also is not more than five hundred (500) feet from the respective End User's premises.

18.1 In new build (Greenfield) areas, where BellSouth has only deployed FTTH/FTTC facilities, BellSouth is only required to unbundle FTTH/FTTC loops to predominantly commercial MDUs, but has no obligation to unbundle such fiber loops to residential MDUs. While the FCC's rules provide that FTTH/FTTC loops serving end user customer premises do not have to be unbundled, CLEC access to unbundled DS1 and DS3 loops was also preserved. Accordingly, in wire centers in which a non-impairment finding for DS1 or DS3 loops has not been made, BellSouth is obligated upon request to unbundle a FTTH/FTTC loop to provide a DS1 or DS3 loop.

19. A hybrid loop is a local loop, composed of both fiber optic cable, usually in the feeder plant, and copper twisted wire or cable, usually in the distribution plant. BellSouth shall provide DPI-Teleconnectwith nondiscriminatory access to the time division multiplexing features, functions and capabilities of such hybrid loop, including DS1 and DS3 capacity under Section 251 where impairment exists, on an unbundled basis to establish a complete transmission path between BellSouth's central office and an End User's premises.

19.1 BellSouth shall not engineer the transmission capabilities of its network in a manner, or engage in any policy, practice, or procedure, that disrupts or degrades access to a local loop or subloop, including the time division multiplexing-based features, functions, and capabilities of a hybrid loop, for which a requesting telecommunications carrier may obtain or has obtained access pursuant to this Attachment.

20. Routine Network Modifications

20.1 BellSouth will perform Routine Network Modifications (RNM) in accordance with FCC 47 CFR 51.319 (a)(7) and (e)(4) for Loops and Dedicated Transport provided under this Attachment. If BellSouth normally provides such RNM for its own customers and has recovered the costs for performing such modifications through the rates set forth in Exhibit A Attachment 2 of the Agreement, then BellSouth will perform such RNM at no additional charge. A routine network modification is an activity that BellSouth regularly undertakes for its own customers. Routine network modifications include, but are not limited to, rearranging or splicing of cable; adding an equipment case; adding a doubler or repeater; adding a smart jack; installing a repeater shelf; adding a line card; and deploying a new multiplexer or reconfiguring an existing multiplexer. Routine network modifications may entail activities such as accessing manholes, deploying bucket trucks to reach aerial cable, and installing equipment casings. Routine network modifications do not include the construction of a new loop, or the installation of new aerial or buried cable for a CLEC.

20.2 RNM will be performed within the intervals established for the Network Element and subject to the performance measurements and associated remedies set forth in Attachment 9 of this Agreement. If BellSouth does not normally provide such RNM for its own customers, and has not recovered the costs of such RNM in the rates set forth in Exhibit A to Attachment 2 of the Agreement, then such request will be handled as a project on an individual case basis. BellSouth will provide a price quote for the request and, upon receipt of payment from DPI-Teleconnect, BellSouth will perform the RNM.

21. Line Conditioning

21.1 Line Conditioning is defined as routine network modification that BellSouth regularly undertakes to provide xDSL services to its own customers. This may include the removal of any device, from a copper Loop or copper Subloop that may diminish the capability of the Loop or Subloop to deliver high-speed switched wireline telecommunications capability, including xDSL service. Such devices include, load coils, excessive bridged taps, low pass filters, and range extenders. Excessive bridged taps are bridged taps that serve no network design purpose and that are beyond the limits set according to industry standards and/or the BellSouth's TR 73600 Unbundled Local Loop Technical Specification.

21.2 BellSouth will remove load coils only on copper Loops and Subloops that are less than eighteen thousand (18,000) feet in length.

21.3 Any copper loop being ordered by DPI-Teleconnect which has over 6,000 feet of combined bridged tap will be modified, upon request from DPI-Teleconnect, so that the loop will have a maximum of 6,000 feet of bridged tap. This modification will be performed at no additional charge to DPI-Teleconnect. Line conditioning orders that

require the removal of other bridged tap that serves no network design purpose on a copper Loop that will result in a combined total of bridged tap between two thousand five hundred (2,500) and six thousand (6,000) feet will be performed at the rates set forth in Exhibit A to Attachment 2 of the Agreement.

21.4 DPI-Teleconnect may request removal of any unnecessary and non excessive bridged tap (bridged tap between zero (0) and two thousand five hundred (2,500) feet which serves no network design purpose), at rates pursuant to BellSouth's SC Process as mutually agreed to by the Parties.

21.5 Rates for Unbundled Loop Modification (ULM) are as set forth in Exhibit A to Attachment 2 of the Agreement.

21.6 BellSouth will not modify a Loop in such a way that it no longer meets the technical parameters of the original Loop type (e.g., voice grade, ADSL, etc.) being ordered.

21.7 If DPI-Teleconnect requests ULM on a reserved facility for a new Loop order, BellSouth may perform a pair change and provision a different Loop facility in lieu of the reserved facility with ULM if feasible. The Loop provisioned will meet or exceed specifications of the requested Loop facility as modified. DPI-Teleconnect will not be charged for ULM if a different Loop is provisioned. For Loops that require a DLR or its equivalent, BellSouth will provide LMU detail of the Loop provisioned.

21.8 DPI-Teleconnect will request Loop make up information pursuant to this Attachment prior to submitting a service inquiry and/or a LSR for the Loop type that DPI-Teleconnect desires BellSouth to condition.

21.9 When requesting ULM for a Loop that BellSouth has previously provisioned for DPI-Teleconnect, DPI-Teleconnect will submit a SI to BellSouth. If a spare Loop facility that meets the Loop modification specifications requested by DPI-Teleconnect is available at the location for which the ULM was requested, DPI-Teleconnect will have the option to change the Loop facility to the qualifying spare facility rather than to provide ULM. In the event that BellSouth changes the Loop facility in lieu of providing ULM, DPI-Teleconnect will not be charged for ULM but will only be charged the service order charges for submitting an order.

22. In FTTH/FTTC overbuild situations where BellSouth also has copper Loops, BellSouth may make those copper Loops available to DPI-Teleconnect on an unbundled basis, until such time as BellSouth chooses to retire those copper Loops using the FCC's network disclosure requirements. Alternatively, BellSouth will offer a 64 Kbps second voice grade channel over its FTTH/FTTC facilities. BellSouth's retirement of copper Loops must comply with applicable law.

22.1 Furthermore, in FTTH/FTTC overbuild areas where BellSouth has not yet retired copper facilities, BellSouth is not obligated to ensure that such copper Loops in that area are capable of transmitting signals prior to receiving a request for access to such Loops by DPI-Teleconnect. If a request is received by BellSouth for a copper Loop, and the copper facilities have not yet been retired, BellSouth will restore the copper Loop to serviceable condition if technically feasible. In these instances of Loop orders in a FTTH/FTTC overbuild area, BellSouth's standard Loop provisioning interval will not apply, and the order will be handled on a project basis by which the Parties will negotiate the applicable provisioning interval.

23. EELs Audit provisions

23.1 BellSouth may, on an annual basis audit DPI-Teleconnect's records in order to verify compliance with the high capacity EEL eligibility criteria. To invoke its limited right to audit, BellSouth will send a Notice of Audit to DPI-Teleconnect. Such Notice of Audit will be delivered to DPI-Teleconnect no less than thirty (30) calendar days prior to the date upon which BellSouth seeks to commence an audit.

23.2 The audit shall be conducted by a third party independent auditor, retained and paid for by BellSouth. The audit must be performed in accordance with the standards established by the American Institute for Certified Public Accountants (AICPA) which will require the auditor to perform an "examination engagement" and issue an opinion regarding DPI-Teleconnect's compliance with the high capacity EEL eligibility criteria. AICPA standards and other AICPA requirements will be used to determine the independence of an auditor. The independent auditor's report will conclude whether DPI-Teleconnect complied in all material respects with the applicable service eligibility criteria. Consistent with standard auditing practices, such audits require compliance testing designed by the independent auditor.

23.3 To the extent the independent auditor's report concludes that DPI-Teleconnect failed to comply with the service eligibility criteria, DPI-Teleconnect must true-up any difference in payments, convert all noncompliant circuits to the appropriate service, and make the correct payments on a going-forward basis.

23.4 To the extent the independent auditor's report concludes that DPI-Teleconnect failed to comply in all material respects with the service eligibility criteria, DPI-Teleconnect shall reimburse BellSouth for the cost of the independent auditor. To the extent the independent auditor's report concludes that DPI-Teleconnect did comply in all material respects with the service eligibility criteria, BellSouth will reimburse DPI-Teleconnect for its reasonable and demonstrable costs associated with the audit. DPI-Teleconnect will maintain appropriate documentation to support its certifications. The Parties shall provide such reimbursement within thirty (30) calendar days of receipt of a statement of such costs.

24. DPI-Teleconnect shall not obtain a Network Element for the exclusive provision of mobile wireless services or interexchange services.

25. Facilities that do not terminate at a demarcation point at an End User premises, including, by way of example, but not limited to, facilities that terminate to another carrier's switch or premises, a cell site, Mobile Switching Center or base station, do not constitute local Loops under Section 251, except to the extent that DPI-Teleconnect may require Loops to such locations for the purpose of providing telecommunications services to its personnel at those locations.

26. Subloop Elements.

26.1 Where facilities permit, BellSouth shall offer access to its Unbundled Subloop (USL) elements as specified herein.

26.2 Unbundled Subloop Distribution (USLD)

26.2.1 The USLD facility is a dedicated transmission facility that BellSouth provides from an End User's point of demarcation to a BellSouth cross-connect device. The BellSouth cross-connect device may be located within a remote terminal (RT) or a stand-alone cross-box in the field or in the equipment room of a building. The USLD media is a copper twisted pair that can be provisioned as a 2-wire or 4-wire facility. BellSouth will make available the following subloop distribution offerings where facilities exist:

USLD – Voice Grade (USLD-VG)
Unbundled Copper Subloop (UCSL)
USLD – Intrabuilding Network Cable (USLD-INC (aka riser cable))

26.2.2 USLD-VG is a copper subloop facility from the cross-box in the field up to and including the point of demarcation at the End User's premises and may have load coils.

26.2.3 UCSL is a copper facility eighteen thousand (18,000) feet or less in length provided from the cross-box in the field up to and including the End User's point of demarcation. If available, this facility will not have any intervening equipment such as load coils between the End User and the cross-box.

26.2.4 If DPI-Teleconnect requests a UCSL and it is not available, DPI-Teleconnect may request the copper Subloop facility be modified pursuant to the ULM process to remove load coils and/or excessive bridged taps. If load coils and/or excessive bridged taps are removed, the facility will be classified as a UCSL.

26.2.5 USLD-INC is the distribution facility owned or controlled by BellSouth inside a building or between buildings on the same property that is not separated by a public street or road. USLD-INC includes the facility from the cross-connect device in the building equipment room up to and including the point of demarcation at the End User's premises.

26.2.6 Upon request for USLD-INC from DPI-Teleconnect, BellSouth will install a cross-connect panel in the building equipment room for the purpose of accessing USLD-INC pairs from a building equipment room. The cross-connect panel will function as a single point of interconnection (SPOI) for USLD-INC and will be accessible by multiple carriers as space permits. BellSouth will place cross-connect blocks in twenty five (25) pair increments for DPI-Teleconnect's use on this cross-connect panel. DPI-Teleconnect will be responsible for connecting its facilities to the twenty five (25) pair cross-connect block(s).

26.2.7 For access to Voice Grade USLD and UCSL, DPI-Teleconnect shall install a cable to the BellSouth cross-box pursuant to the terms and conditions for physical collocation for remote sites set forth in Attachment 4. This cable would be connected by a BellSouth technician within the BellSouth cross-box during the set-up process. DPI-Teleconnect's cable pairs can then be connected to BellSouth's USL within the BellSouth cross-box by the BellSouth technician.

26.2.8 Through the SI process, BellSouth will determine whether access to USLs at the location requested by DPI-Teleconnect is technically feasible and whether sufficient capacity exists in the cross-box. If existing capacity is sufficient to meet DPI-Teleconnect's request, then BellSouth will perform the site set-up as described in the CLEC Information Package, located at BellSouth's Interconnection Web site: www.interconnection.bellsouth.com/products/html/unes.html.

26.2.9 The site set-up must be completed before DPI-Teleconnect can order Subloop pairs. For the site set-up in a BellSouth cross-connect box in the field, BellSouth will perform the necessary work to splice DPI-Teleconnect's cable into the cross-connect box. For the site set-up inside a building equipment room, BellSouth will perform the necessary work to install the cross-connect panel and the connecting block(s) that will be used to provide access to the requested USLs.

26.2.10 Once the site set-up is complete, DPI-Teleconnect will request Subloop pairs through submission of a LSR form to the LCSC. OC is required with USL pair provisioning when DPI-Teleconnect requests reuse of an existing facility, and the OC charge shall be billed in addition to the USL pair rate. For expedite requests by DPI-Teleconnect for Subloop pairs, expedite charges will apply for intervals less than five (5) days.

26.2.11 USLs will be provided in accordance with BellSouth's TR73600 Unbundled Local Loop Technical Specifications.

26.3 <u>Unbundled Network Terminating Wire (UNTW)</u>

26.3.1 NTW is unshielded twisted copper wiring that is used to extend circuits from an intra-building network cable terminal or from a building entrance terminal to an individual End User's point of demarcation. It is the final portion of the Loop that in multi-subscriber configurations represents the point at which the network branches out to serve individual subscribers.

26.3.2 This element will be provided in MDUs and/or Multi-Tenants Units (MTUs) where either Party owns wiring all the way to the End User's premises. Neither Party will provide this element in locations where the property owner provides its own wiring to the End User's premises, where a third party owns the wiring to the End User's premises.

26.3.3 <u>Requirements</u>

26.3.3.1 On a multi-unit premises, upon request of the other Party (Requesting Party), the Party owning the network terminating wire (Provisioning Party) will provide access to UNTW pairs on an Access Terminal that is suitable for use by multiple carriers at each Garden Terminal or Wiring Closet.

26.3.3.2 The Provisioning Party shall not be required to install new or additional NTW beyond existing NTW to provision the services of the Requesting Party.

26.3.3.3 In existing MDUs and/or MTUs in which BellSouth does not own or control wiring (INC/NTW) to the End Users premises, and DPI-Teleconnect does own or control such wiring, DPI-Teleconnect will install UNTW Access Terminals for BellSouth under the same terms and conditions as BellSouth provides UNTW Access Terminals to DPI-Teleconnect.

26.3.3.4 In situations in which BellSouth activates a UNTW pair, BellSouth will compensate DPI-Teleconnect for each pair activated commensurate to the price specified in DPI-Teleconnect's Agreement.

26.3.3.5 Upon receipt of the UNTW SI requesting access to the Provisioning Party's UNTW pairs at a multi-unit premises, representatives of both Parties will participate in a meeting at the site of the requested access. The purpose of the site visit will include discussion of the procedures for installation and location of the Access Terminals. By request of the Requesting Party, an Access Terminal will be installed either adjacent to each of the Provisioning Party's Garden Terminal or inside each Wiring Closet. The Requesting Party will deliver and connect its central office facilities to the UNTW pairs within the Access Terminal. The Requesting Party may access any available pair on an Access Terminal. A pair is available when a pair is not being utilized to provide service or where the End User has requested a change in its local service provider to the Requesting Party. Prior to connecting the Requesting Party's service on a pair previously used by the Provisioning Party, the Requesting Party is responsible for ensuring the End User is no longer using the Provisioning Party's service or another CLEC's service before accessing UNTW pairs.

26.3.3.6 Access Terminal installation intervals will be established on an individual case basis.

26.3.3.7 The Requesting Party is responsible for obtaining the property owner's permission for the Provisioning Party to install an Access Terminal(s) on behalf of the Requesting Party. The submission of the SI by the Requesting Party will serve as certification by the Requesting Party that such permission has been obtained. If the property owner objects to Access Terminal installations that are in progress or within thirty (30) days after completion and demands removal of Access Terminals, the Requesting Party will be responsible for costs associated with removing Access Terminals and restoring the property to its original state prior to Access Terminals being installed.

26.3.3.8 The Requesting Party shall indemnify and hold harmless the Provisioning Party against any claims of any kind that may arise out of the Requesting Party's failure to obtain the property owner's permission. The Requesting Party will be billed for nonrecurring and recurring charges for accessing UNTW pairs at the time the Requesting Party activates the pair(s). The Requesting Party will notify the Provisioning Party within five (5) business days of activating UNTW pairs using the LSR form.

26.3.3.9 If a trouble exists on a UNTW pair, the Requesting Party may use an alternate spare pair that serves that End User if a spare pair is available. In such cases, the Requesting Party will re-terminate its existing jumper from the defective pair to the

spare pair. Alternatively, the Requesting Party will isolate and report troubles in the manner specified by the Provisioning Party. The Requesting Party must tag the UNTW pair that requires repair. If the Provisioning Party dispatches a technician on a reported trouble call and no UNTW trouble is found, the Provisioning Party will charge Requesting Party for time spent on the dispatch and testing the UNTW pair(s).

26.3.3.10 If the Requesting Party initiates the Access Terminal installation and the Requesting Party has not activated at least ten percent (10%) of the capacity of the Access Terminal installed pursuant to the Requesting Party's request for an Access Terminal within six (6) months of installation of the Access Terminal, the Provisioning Party will bill the Requesting Party a nonrecurring charge equal to the actual cost of provisioning the Access Terminal.

26.3.3.11 If the Provisioning Party determines that the Requesting Party is using the UNTW pairs without reporting the activation of the pairs, the Requesting Party will be billed for the use of that pair back to the date the End User began receiving service from the Requesting Party at that location. Upon request, the Requesting Party will provide copies of its billing record to substantiate such date. If the Requesting Party fails to provide such records, then the Provisioning Party will bill the Requesting Party back to the date of the Access Terminal installation.

UNBUNDLED NETWORK ELEMENTS - Florida														Attachment: 2		Exhibit: B	
CATEGORY	RATE ELEMENTS	Interim	Zone	BCS	USOC	RATES ($)					Svc Order Submitted Elec per LSR	Svc Order Submitted Manually per LSR	Incremental Charge - Manual Svc Order vs. Electronic-1st	Incremental Charge - Manual Svc Order vs. Electronic-Add'l	Incremental Charge - Manual Svc Order vs. Electronic-Disc 1st	Incremental Charge - Manual Svc Order vs. Electronic-Disc Add'l
						Rec	Nonrecurring		Nonrecurring Disconnect		OSS Rates ($)					
							First	Add'l	First	Add'l	SOMEC	SOMAN	SOMAN	SOMAN	SOMAN	SOMAN
UNBUNDLED EXCHANGE ACCESS LOOP																
2-WIRE ANALOG VOICE GRADE LOOP																
	Switch-As-Is Conversion rate per UNE Loop, Single LSR, (per DS0)			UEA	URESL		8.98	8.98								
	Switch-As-Is Conversion rate per UNE Loop, Spreadsheet, (per DS0)			UEA	URESP		8.98	8.98								
4-WIRE ANALOG VOICE GRADE LOOP																
	Switch-As-Is Conversion rate per UNE Loop, Single LSR, (per DS0)			UEA	URESL		8.98	8.98								
	Switch-As-Is Conversion rate per UNE Loop, Spreadsheet, (per DS0)			UEA	URESP		8.98	8.98								
4-WIRE DS1 DIGITAL LOOP																
	Switch-As-Is Conversion rate per UNE Loop, Single LSR, (per DS1)			USL	URESL		8.98	8.98								
	Switch-As-Is Conversion rate per UNE Loop, Spreadsheet, (per DS1)			USL	URESP		8.98	8.98								
4-WIRE 19.2, 56 OR 64 KBPS DIGITAL GRADE LOOP																
	Switch-As-Is Conversion rate per UNE Loop, Single LSR, (per DS0)			UDL	URESL		8.98	8.98								
	Switch-As-Is Conversion rate per UNE Loop, Spreadsheet, (per DS0)			UDL	URESP		8.98	8.98								
UNE LOOP COMMINGLING																
2-WIRE ANALOG VOICE GRADE LOOP - COMMINGLING																
	2-Wire Analog Voice Grade Loop - Service Level 2 w/Loop or Ground Start Signaling - Zone 1		1	NTCVG	UEAL2	12.24	135.75	82.47	63.53	12.01						
	2-Wire Analog Voice Grade Loop - Service Level 2 w/Loop or Ground Start Signaling - Zone 2		2	NTCVG	UEAL2	17.40	135.75	82.47	63.53	12.01						
	2-Wire Analog Voice Grade Loop - Service Level 2 w/Loop or Ground Start Signaling - Zone 3		3	NTCVG	UEAL2	30.87	135.75	82.47	63.53	12.01						
	2-Wire Analog Voice Grade Loop - Service Level 2 w/Reverse Battery Signaling - Zone 1		1	NTCVG	UEAR2	12.24	135.75	82.47	63.53	12.01						
	2-Wire Analog Voice Grade Loop - Service Level 2 w/Reverse Battery Signaling - Zone 2		2	NTCVG	UEAR2	17.40	135.75	82.47	63.53	12.01						
	2-Wire Analog Voice Grade Loop - Service Level 2 w/Reverse Battery Signaling - Zone 3		3	NTCVG	UEAR2	30.87	135.75	82.47	63.53	12.01						
	Switch-As-Is Conversion rate per UNE Loop, Single LSR, (per DS0)			NTCVG	URESL		8.98	8.98								
	Switch-As-Is Conversion rate per UNE Loop, Spreadsheet, (per DS0)			NTCVG	URESP		8.98	8.98								
	CLEC to CLEC Conversion Charge without outside dispatch			NTCVG	UREWO		87.71	36.35								
	Loop Tagging - Service Level 2 (SL2)			NTCVG	URETL		11.21	1.10								
4-WIRE ANALOG VOICE GRADE LOOP - COMMINGLING																
	4-Wire Analog Voice Grade Loop - Zone 1		1	NTCVG	UEAL4	18.89	167.86	115.15	67.08	15.56						
	4-Wire Analog Voice Grade Loop - Zone 2		2	NTCVG	UEAL4	26.84	167.86	115.15	67.08	15.56						
	4-Wire Analog Voice Grade Loop - Zone 3		3	NTCVG	UEAL4	47.62	167.86	115.15	67.08	15.56						
	Switch-As-Is Conversion rate per UNE Loop, Single LSR, (per DS0)			NTCVG	URESL		8.98	8.98								
	Switch-As-Is Conversion rate per UNE Loop, Spreadsheet, (per DS0)			NTCVG	URESP		8.98	8.98								
	CLEC to CLEC Conversion Charge without outside dispatch			NTCVG	UREWO		87.71	36.35								
4-WIRE DS1 DIGITAL LOOP - COMMINGLING																
	4-Wire DS1 Digital Loop - Zone 1		1	NTCD1	USLXX	70.74	313.75	181.48	61.22	13.53						
	4-Wire DS1 Digital Loop - Zone 2		2	NTCD1	USLXX	100.54	313.75	181.48	61.22	13.53						
	4-Wire DS1 Digital Loop - Zone 3		3	NTCD1	USLXX	178.39	313.75	181.48	61.22	13.53						
	Switch-As-Is Conversion rate per UNE Loop, Single LSR, (per DS1)			NTCD1	URESL		8.98	8.98								
	Switch-As-Is Conversion rate per UNE Loop, Spreadsheet, (per DS1)			NTCD1	URESP		8.98	8.98								
	CLEC to CLEC Conversion Charge without outside dispatch			NTCD1	UREWO		101.07	43.04								
4-WIRE 19.2, 56 OR 64 KBPS DIGITAL GRADE LOOP - COMMINGLING																
	4 Wire Unbundled Digital Loop 2.4 Kbps - Zone 1		1	NTCUD	UDL2X	22.20	161.56	108.85	67.08	15.56						
	4 Wire Unbundled Digital Loop 2.4 Kbps - Zone 2		2	NTCUD	UDL2X	31.56	161.56	108.85	67.08	15.56						
	4 Wire Unbundled Digital Loop 2.4 Kbps - Zone 3		3	NTCUD	UDL2X	55.99	161.56	108.85	67.08	15.56						
	4 Wire Unbundled Digital Loop 4.8 Kbps - Zone 1		1	NTCUD	UDL4X	22.20	161.56	108.85	67.08	15.56						
	4 Wire Unbundled Digital Loop 4.8 Kbps - Zone 2		2	NTCUD	UDL4X	31.56	161.56	108.85	67.08	15.56						
	4 Wire Unbundled Digital Loop 4.8 Kbps - Zone 3		3	NTCUD	UDL4X	55.99	161.56	108.85	67.08	15.56						
	4 Wire Unbundled Digital Loop 9.6 Kbps - Zone 1		1	NTCUD	UDL9X	22.20	161.56	108.85	67.08	15.56						
	4 Wire Unbundled Digital Loop 9.6 Kbps - Zone 2		2	NTCUD	UDL9X	31.56	161.56	108.85	67.08	15.56						
	4 Wire Unbundled Digital Loop 9.6 Kbps - Zone 3		3	NTCUD	UDL9X	55.99	161.56	108.85	67.08	15.56						
	4 Wire Unbundled Digital 19.2 Kbps - Zone 1		1	NTCUD	UDL19	22.20	161.56	108.85	67.08	15.56						
	4 Wire Unbundled Digital 19.2 Kbps - Zone 2		2	NTCUD	UDL19	31.56	161.56	108.85	67.08	15.56						
	4 Wire Unbundled Digital 19.2 Kbps - Zone 3		3	NTCUD	UDL19	55.99	161.56	108.85	67.08	15.56						
	4 Wire Unbundled Digital Loop 56 Kbps - Zone 1		1	NTCUD	UDL56	22.20	161.56	108.85	67.08	15.56						
	4 Wire Unbundled Digital Loop 56 Kbps - Zone 2		2	NTCUD	UDL56	31.56	161.56	108.85	67.08	15.56						
	4 Wire Unbundled Digital Loop 56 Kbps - Zone 3		3	NTCUD	UDL56	55.99	161.56	108.85	67.08	15.56						

UNBUNDLED NETWORK ELEMENTS - Florida														Attachment: 2		Exhibit: B	
CATEGORY		RATE ELEMENTS	Interim	Zone	BCS	USOC	RATES ($)					Svc Order Submitted Elec per LSR	Svc Order Submitted Manually per LSR	Incremental Charge - Manual Svc Order vs. Electronic-1st	Incremental Charge - Manual Svc Order vs. Electronic-Add'l	Incremental Charge - Manual Svc Order vs. Electronic-Disc 1st	Incremental Charge - Manual Svc Order vs. Electronic-Disc Add'l
							Rec	Nonrecurring		Nonrecurring Disconnect		OSS Rates ($)					
								First	Add'l	First	Add'l	SOMEC	SOMAN	SOMAN	SOMAN	SOMAN	SOMAN
		4 Wire Unbundled Digital Loop 64 Kbps - Zone 1		1	NTCUD	UDL64	22.20	161.56	108.85	67.08	15.56						
		4 Wire Unbundled Digital Loop 64 Kbps - Zone 2		2	NTCUD	UDL64	31.56	161.56	108.85	67.08	15.56						
		4 Wire Unbundled Digital Loop 64 Kbps - Zone 3		3	NTCUD	UDL64	55.99	161.56	108.85	67.08	15.56						
		Switch-As-Is Conversion rate per UNE Loop, Single LSR, (per DS0)			NTCUD	URESL		8.98	8.98								
		Switch-As-Is Conversion rate per UNE Loop, Spreadsheet, (per DS0)			NTCUD	URESP		8.98	8.98								
		CLEC to CLEC Conversion Charge without outside dispatch			NTCUD	UREWO		102.11	49.74								
		Order Coordination for Specified Conversion Time (per LSR)			NTCVG, NTCUD, NTCD1	OCOSL		23.02									
COMMINGLING																	
		Commingling Authorization			UNCVX, UNCDX, UNC1X, UNC3X, UNCSX, U1TD1, U1TD3, U1TS1, UE3, UDLSX, U1TVX, U1TDX, U1TUB, ULDVX, ULDD1, ULDD3, ULDS1	CMGAU	0.00	0.00	0.00	0.00	0.00						
	Commingled (UNE part of single bandwidth circuit)																
		Commingled VG COCI			XDV2X, NTCVG	1D1VG	1.38	6.71	4.84	0.00	0.00						
		Commingled Digital COCI			XDV6X, NTCUD	1D1DD	2.10	6.71	4.84	0.00	0.00						
		Commingled ISDN COCI			XDD4X	UC1CA	3.66	6.71	4.84	0.00	0.00						
		Commingled 2-wire VG Interoffice Channel			XDV2X	U1TV2	25.32	94.70	52.59	45.28	18.03						
		Commingled 4-wire VG Interoffice Channel			XDV6X	U1TV4	22.58	94.70	52.59	45.28	18.03						
		Commingled 56kbps Interoffice Channel			XDD4X	U1TD5	18.44	94.70	52.59	45.28	18.03						
		Commingled 64kbps Interoffice Channel			XDD4X	U1TD6	18.44	94.70	52.59	45.28	18.03						
		Commingled VG/DS0 Interoffice Channel Mileage			XDV2X, XDV6X, XDD4X	1L5XX	0.0091										
		Commingled 2-wire Local Loop Zone 1		1	XDV2X	UEAL2	12.24	127.59	60.54	48.00	6.31						
		Commingled 2-wire Local Loop Zone 2		2	XDV2X	UEAL2	17.40	127.59	60.54	48.00	6.31						
		Commingled 2-wire Local Loop Zone 3		3	XDV2X	UEAL2	30.87	127.59	60.54	48.00	6.31						
		Commingled 4-wire Local Loop Zone 1		1	XDV6X	UEAL4	18.89	127.59	60.54	48.00	6.31						
		Commingled 4-wire Local Loop Zone 2		2	XDV6X	UEAL4	26.84	127.59	60.54	48.00	6.31						
		Commingled 4-wire Local Loop Zone 3		3	XDV6X	UEAL4	47.62	127.59	60.54	48.00	6.31						
		Commingled 56kbps Local Loop Zone 1		1	XDD4X	UDL56	22.20	127.59	60.54	48.00	6.31						
		Commingled 56kbps Local Loop Zone 2		2	XDD4X	UDL56	31.56	127.59	60.54	48.00	6.31						
		Commingled 56kbps Local Loop Zone 3		3	XDD4X	UDL56	55.99	127.59	60.54	48.00	6.31						
		Commingled 64kbps Local Loop Zone 1		1	XDD4X	UDL64	22.20	127.59	60.54	48.00	6.31						
		Commingled 64kbps Local Loop Zone 2		2	XDD4X	UDL64	31.56	127.59	60.54	48.00	6.31						
		Commingled 64kbps Local Loop Zone 3		3	XDD4X	UDL64	55.99	127.59	60.54	48.00	6.31						
		Commingled ISDN Local Loop Zone 1		1	XDD4X	U1L2X	19.28	127.59	60.54	48.00	6.31						
		Commingled ISDN Local Loop Zone 2		2	XDD4X	U1L2X	27.40	127.59	60.54	48.00	6.31						
		Commingled ISDN Local Loop Zone 3		3	XDD4X	U1L2X	48.62	127.59	60.54	48.00	6.31						
		Commingled DS1 COCI			XDH1X, NTCD1	UC1D1	13.76	6.71	4.84	0.00	0.00						
		Commingled DS1 Interoffice Channel			XDH1X	U1TF1	88.44	174.46	122.46	45.61	17.95						
		Commingled DS1 Interoffice Channel Mileage			XDH1X	1L5XX	0.1856										
		Commingled DS1/DS0 Channel System			XDH1X	MQ1	146.77	57.28	14.74								
		Commingled DS1 Local Loop Zone 1		1	XDH1X	USLXX	70.74	217.75	121.62	51.44	14.45						
		Commingled DS1 Local Loop Zone 2		2	XDH1X	USLXX	100.54	217.75	121.62	51.44	14.45						
		Commingled DS1 Local Loop Zone 3		3	XDH1X	USLXX	178.39	217.75	121.62	51.44	14.45						
		Commingled DS3 Local Loop			HFQC6	UE3PX	386.88	244.42	154.73	67.10	26.27						
		Commingled DS3/STS-1 Local Loop Mileage			HFQC6, HFRST	1L5ND	10.92										
		Commingled STS-1 Local Loop			HFRST	UDLS1	426.60	244.42	154.73	67.10	26.27						
		Commingled DS3/DS1 Channel System			HFQC6	MQ3	211.19	115.60	56.54	12.16	4.26						
		Commingled DS3 Interoffice Channel			HFQC6	U1TF3	1,071.00	320.00	138.20	38.60	18.81						
		Commingled DS3 Interoffice Channel Mileage			HFQC6	1L5XX	3.87										
		Commingled STS-1Interoffice Channel			HFRST	U1TFS	1,056.00	320.00	138.20	38.60	18.81						
		Commingled STS-1Interoffice Channel Mileage			HFRST	1L5XX	3.87										
		Commingled Dark Fiber - Interoffice Transport, Per Four Fiber Strands, Per Route Mile Or Fraction Thereof			HEQDL	1L5DF	26.85										
		Commingled Dark Fiber - Interoffice Transport, Per Four Fiber Strands, Per Route Mile Or Fraction Thereof			HEQDL	UDF14		751.34	193.88								

Amendment to the Agreement
Between
DPI-Teleconnect, LLC
and
BellSouth Telecommunications, Inc.
Dated 4/19/2003

Pursuant to this Amendment, (the "Amendment"), DPI-Teleconnect, LLC (DPI-Teleconnect), and BellSouth Telecommunications, Inc. (BellSouth), hereinafter referred to collectively as the "Parties", hereby agree to amend that certain Interconnection Agreement between the Parties dated 4/19/2003 (Agreement).

WHEREAS, BellSouth and DPI-Teleconnect have entered into good faith negotiations pursuant to the Act to renegotiate an interconnection agreement (New Agreement) to replace the existing Agreement between the Parties, which expired on 4/18/2006; and

WHEREAS, the Parties desire to extend the term of the Agreement; and

WHEREAS, on July 25, 2006, the Louisiana Public Service Commission ("Commission") issued its Order in Docket No. U-28356 ("Order"), Petition Regarding the Establishment of a Generic Proceeding on Change of Law and Nondiscriminatory Pricing for UNEs; and

WHEREAS, the Parties are obligated to amend the Agreement to bring it in compliance with the Commission's Order;

NOW, THEREFORE, in consideration of the mutual provisions contained herein and other good and valuable consideration, the receipt and sufficiency of which are hereby acknowledged, the Parties hereby covenant and agree as follows:

1. The Parties hereby agree to extend the term of the Agreement by ninety (90) days following the date of the last signature of this Amendment. Other than the modification of the expiration date as described in this Amendment, all provisions in Section 2 of the General Terms and Conditions of the Agreement relating to the term and termination of the Agreement remain in full force and effect.

2. The Parties hereby agree to incorporate into the Agreement the contract provisions set forth in Exhibit A hereto, and such contract provisions shall apply to services provided in the State of Louisiana only.

3. The Parties hereby agree to incorporate into the Agreement the rates set forth in Exhibit B and C hereto, and such rates shall apply to services provided in the State of Louisiana only.

4. To the extent that such contract provisions or rates as set forth in Exhibits A and B and C hereto conflict with any other rates, terms and conditions in the Agreement, the contract provisions and rates in Exhibits A, B, and C shall prevail in the State of Louisiana.

5. The Parties hereby agree to delete the following rates from Attachment 2, Exhibit A of the Agreement for the state of Louisiana:

   8XX Access Ten Digit Screening
   Line Information Data Base (LIDB) Access
   Calling Name (CNAM) Service
   Unbundled Local Switching
   Unbundled Port/loop Combinations
   Selective Routing
   AIN Selective Carrier Routing
   AIN – BellSouth AIN SIMS Access Service

6. The Parties also hereby agree to delete the following provisions and associated rates from Attachment 7 of the Agreement for Louisiana:

   Optional Daily Usage File (ODUF);
   Access Daily Usage File (ADUF);
   Enhanced Optional Daily Usage File (EODUF) in their entirety

7. Further, to the extent that defined terms in this Amendment differ from defined terms in the Agreement, such defined terms in the Agreement shall be deemed to have the same meaning as the alternative defined terms in this Amendment to the extent necessary to give full effect to this Amendment consistent with the Louisiana Public Service Commission's Orders.

8. This Amendment shall be shall be deemed effective on March 11, 2006 (Effective Date).

9. All of the other provisions of the Agreement shall remain in full force and effect.

10. Either or both of the Parties are authorized to submit this Amendment to the respective state regulatory authorities for approval subject to Section 252(e) of the Federal Telecommunications Act of 1996.

IN WITNESS WHEREOF, the Parties have executed this Amendment the day and year written below.

BellSouth Telecommunications, Inc.	**DPI-Teleconnect, LLC**
By: Kristen E. Shore	By: David B. Dorwart
Name: Kristen Rowe S Shore	Name: DAVID B. DORWART
Title: Director	Title: President + CEO
Date: 11/16/06	Date: 11/14/06

Version: Generic Amendment Template
XX/XX/XX

1. **Transition for DS1 and DS3 Loops**

1.1 For purposes of this Section 1, the Transition Period for the Embedded Base of DS1 and DS3 Loops and for the Excess DS1 and DS3 Loops is the twelve (12) month period beginning March 11, 2005 and ending March 10, 2006.

1.2 For purposes of this Section 1, Embedded Base means DS1 and DS3 Loops that were in service for DPI-Teleconnect as of March 11, 2005 in those wire centers that, as of such date, met the criteria set forth in Section 1.4.1 and 1.4.2.

1.3 Excess DS1 and DS3 Loops are those DPI-Teleconnect DS1 and DS3 Loops in service as of March 11, 2005, in excess of the caps set forth in Sections 1.3.1 and 1.3.2 below, respectively.

1.3.1 DPI-Teleconnect may obtain a maximum of ten (10) unbundled DS1 Loops to any single building in which such Loops are still subject to unbundling requirements.

1.3.2 DPI-Teleconnect may obtain a maximum of one (1) Unbundled DS3 Loop to any single building in which such Loops are still subject to unbundling requirements.

1.4 DPI-Teleconnect may obtain access to the following:

1.4.1 Unbundled DS1 Loops to any Building not served by a wire center with at least 60,000 Business Lines and four (4) or more fiber-based collocators.

1.4.2 Unbundled DS3 Loops to any Building not served by a wire center with at least 38,000 Business Lines and four (4) or more fiber-based collocators.

1.5 The Initial Unimpaired Wire Center List setting forth the wire centers meeting the criteria set forth in Sections 1.4.1 and 1.4.2 above, is set forth in Carrier Notification Letter SN91086185, which is available on BellSouth's Interconnection Web site.

1.6 Transition Period Pricing. From March 11, 2005, through the expiration of the Transition Period, BellSouth shall charge/collect a rate for DPI-Teleconnect's Embedded Base and DPI-Teleconnect's Excess DS1 and DS3 Loops equal to 115% of the rate paid for that element on June 15, 2004.

1.6.1 These rates shall be as set forth in Exhibit A to Attachment 2 of the Agreement and this Section 1.6.

1.7 If DPI-Teleconnect failed to submit the spreadsheet(s) for its Embedded Base and Excess DS1 and DS3 Loops on or before March 10, 2006, BellSouth will identify and transition such circuits to the equivalent wholesale services provided by BellSouth. Those circuits identified and transitioned by BellSouth pursuant to this Section shall be subject to the full nonrecurring charges for installation of the equivalent tariffed BellSouth service as set forth in BellSouth's tariffs.

1.7.1 For Embedded Base circuits and Excess DS1 and DS3 Loops converted, the applicable recurring tariff charge shall apply to each circuit as of March 11, 2006. The transition of the Embedded Base and Excess DS1 and DS3 Loops should be performed in a manner that avoids, or otherwise minimizes to the extent possible, disruption or degradation to DPI-Teleconnect's customers' service.

2. Dark Fiber Loop

2.1 Dark Fiber Loop is an unused optical transmission facility, without attached signal regeneration, multiplexing, aggregation or other electronics, from the demarcation point at an Customer's premises to the Customer's serving wire center. Dark Fiber Loops may be strands of optical fiber existing in aerial or underground structure. BellSouth will not provide line terminating elements, regeneration or other electronics necessary for DPI-Teleconnect to utilize Dark Fiber Loops.

2.2 Transition for Dark Fiber Loop

2.2.1 For purposes of this Section 2.2, the Transition Period for Dark Fiber Loops is the eighteen (18) month period beginning March 11, 2005 and ending September 10, 2006.

2.2.2 For purposes of this Section 2.2, Embedded Base means Dark Fiber Loops that were in service for DPI-Teleconnect as of March 11, 2005 and/or added during the Transition Period as pursuant to Commission Order.

2.2.3 During the Transition Period only, BellSouth shall make available for the Embedded Base Dark Fiber Loops for DPI-Teleconnect at the terms and conditions set forth in this Attachment.

2.2.4 Transition Period Pricing. From March 11, 2005, through the completion of the Transition Period, BellSouth shall charge a rate for DPI-Teleconnect's Embedded Base of Dark Fiber Loops equal to 115% of the rate paid for that element on June 15, 2004.

2.2.4.1 These rates shall be as set forth in Exhibit A to Attachment 2 of the Agreement and this Section 2.2.4.

2.2.4.2 The Transition Period shall apply only to DPI-Teleconnect's Embedded Base and DPI-Teleconnect shall not add new Dark Fiber Loops pursuant to this Agreement.

2.2.5 Effective September 11, 2006, Dark Fiber Loops shall no longer be made available pursuant to this Agreement.

2.2.6 DPI-Teleconnect shall strive to provide spreadsheets to BellSouth no later than September 10, 2006, identifying the specific Dark Fiber Loops, to be either disconnected or converted to other BellSouth services. DPI-Teleconnect may transition from Dark Fiber Loops to other available wholesale facilities provided by BellSouth, including special access, wholesale facilities obtained from other carriers, or self-provisioned facilities. For Conversions as defined in Section 13, such spreadsheets shall take the place of an LSR or ASR. The Parties shall negotiate a project schedule for the Conversion of the Embedded Base Dark Fiber Loops.

2.2.6.1 If DPI-Teleconnect submits the spreadsheets specified in Section 2.2.6 above for all of its Embedded Base on or before September 10, 2006, Conversions shall be subject to Commission-approved switch-as-is charges and no disconnect charges.

2.2.6.2 If DPI-Teleconnect fails to submit the spreadsheet(s) specified in Section 2.2.6 above for all of its Embedded Base on or before September 10, 2006, BellSouth will identify DPI-Teleconnect's remaining Embedded Base, if any, and will transition such circuits to the equivalent tariffed BellSouth service(s). Those circuits identified and transitioned by BellSouth pursuant to this Section 2.2.6.2 shall be subject to the full nonrecurring charges for installation of the equivalent tariffed BellSouth service as set forth in BellSouth's tariffs.

2.2.6.3 For Embedded Base circuits converted or transitioned, the applicable recurring tariff charge shall apply to each circuit as of September 11, 2006. The transition of the Embedded Base circuits should be performed in a manner that avoids, or otherwise minimizes to the extent possible, disruption or degradation to DPI-Teleconnect's customers' service.

3. Local Switching

3.1 Local Switching is not available pursuant to this Agreement.

4. Dedicated Transport and Dark Fiber Transport

4.1 Dedicated Transport. Dedicated Transport is defined as BellSouth's transmission facilities between wire centers or switches owned by BellSouth, or between wire

centers or switches owned by BellSouth and switches owned by DPI-Teleconnect, including but not limited to DS1, DS3 and OCn level services, as well as dark fiber, dedicated to DPI-Teleconnect. BellSouth shall not be required to provide access to OCn level Dedicated Transport under any circumstances pursuant to this Agreement. In addition, except as set forth in Section 4.2 below, BellSouth shall not be required to provide to DPI-Teleconnect unbundled access to interoffice transmission facilities that do not connect a pair of wire centers or switches owned by BellSouth ("Entrance Facilities").

4.2 Transition for DS1 and DS3 Dedicated Transport Including DS1 and DS3 Entrance Facilities

4.2.1 For purposes of this Section 4.2, the Transition Period for the Embedded Base of DS1 and DS3 Dedicated Transport, Embedded Base Entrance Facilities and for Excess DS1 and DS3 Dedicated Transport, is the twelve (12) month period beginning March 11, 2005 and ending March 10, 2006.

4.2.2 For purposes of this Section 4.2, Embedded Base means DS1 and DS3 Dedicated Transport that were in service for DPI-Teleconnect as of March 11, 2005 in those wire centers that, as of such date, met the criteria set forth in Sections 4.2.5.1 or 4.2.5.2 below.

4.2.3 For purposes of this Section 4.2, Embedded Base Entrance Facilities means Entrance Facilities that were in service for DPI-Teleconnect as of March 11, 2005.

4.2.4 For purposes of this Section 4.2, Excess DS1 and DS3 Dedicated Transport means those DPI-Teleconnect DS1 and DS3 Dedicated Transport facilities in service as of March 11, 2005, in excess of the caps set forth in Section 4.2.5.3.

4.2.5 DPI-Teleconnect may obtain access to the following:

4.2.5.1 DS1 Transport except on routes connecting a pair of wire centers, where both wire centers contain at least four (4) fiber-based collocators or at least 38,000 Business access lines.

4.2.5.2 DS3 Transport except on routes connecting a pair of wire centers, each of which contains at least three (3) fiber-based collocators or at least 24,000 Business access lines.

4.2.5.3 DPI-Teleconnect may obtain a maximum of twelve (12) unbundled DS3 Dedicated Transport circuits on each route where DS3 Dedicated Transport is available as a Network Element, and a maximum of ten (10) unbundled DS1 Dedicated Transport circuits on each Route where there is no 251(c)(3) unbundling obligation for DS3 Dedicated Transport but for which impairment exists for DS1 Dedicated Transport.

4.2.6 The Initial Unimpaired Wire Center List setting forth the wire centers meeting the criteria set forth in Sections 4.2.5.1 and 4.2.5.2 above is set forth in Carrier Notification Letter SN91086185, which is available on BellSouth's Interconnection Web site.

4.2.7 Transition Period Pricing. From March 11, 2005, through the completion of the Transition Period, BellSouth shall charge/collect a rate for DPI-Teleconnect's Embedded Base of DS1 and DS3 Dedicated Transport and for DPI-Teleconnect's Excess DS1 and DS3 Dedicated Transport, as described in this Section 4.2, equal to 115% of the rate paid for that element on June 15, 2004.

4.2.7.1 These rates shall be as set forth in Exhibit A to Attachment 2 of the Agreement and this Section 4.2.7.

4.2.7.2 From March 11, 2005, through the completion of the Transition Period, BellSouth shall charge/collect a rate for DPI-Teleconnect's Embedded Base Entrance Facilities as set forth in Exhibit A to Attachment 2 of the Agreement and this Section 4.2.7.

4.2.8 If DPI-Teleconnect failed to submit the spreadsheet(s) identifying its Embedded Base DS1 and DS3 Dedicated Transport circuits, Embedded Base Entrance Facilities and Excess DS1 and DS3 Dedicated Transport on or before March 10, 2006, BellSouth will identify DPI-Teleconnect's remaining Embedded Base DS1 and DS3 Dedicated Transport circuits, Embedded Base Entrance Facilities and Excess DS1 and DS3 Dedicated Transport, if any, and will transition such circuits to the equivalent tariffed BellSouth service(s). Those circuits identified and transitioned by BellSouth shall be subject to the full nonrecurring charges for installation of such BellSouth services as set forth in BellSouth's tariffs.

4.2.9 For Embedded Base DS1 and DS3 Dedicated Transport circuits, Embedded Base Entrance Facilities and Excess DS1 and DS3 Dedicated Transport converted or transitioned, the applicable recurring tariff charge shall apply to each circuit as of March 11, 2006. The transition of the Embedded Base DS1 and DS3 Dedicated

Transport, Embedded Base Entrance Facilities and Excess DS1 and DS3 Dedicated Transport should be performed in a manner that avoids, or otherwise, minimizes to the extent possible, disruption or degradation to DPI-Teleconnect's customers' service.

4.3 Dark Fiber Transport. Dark Fiber Transport is defined as Dedicated Transport that consists of unactivated optical interoffice transmission facilities without attached signal regeneration, multiplexing, aggregation or other electronics. Except as set forth in Section 4.3.1 below, BellSouth shall not be required to provide access to Dark Fiber Transport Entrance Facilities pursuant to this Agreement.

4.3.1 Transition for Dark Fiber Transport and Dark Fiber Transport Entrance Facilities

4.3.2 For purposes of this Section 4.3, the Transition Period for the Embedded Base Dark Fiber Transport and Embedded Base Dark Fiber Entrance Facilities is the eighteen (18) month period beginning March 11, 2005 and ending September 10, 2006.

4.3.3 For purposes of this Section 4.3, Embedded Base means Dark Fiber Transport that was in service for DPI-Teleconnect as of March 11, 2005 in those wire centers that, as of such date, met the criteria set forth in Section 4.3.5 below.

4.3.4 For purposes of this Section 4.3, Embedded Base Dark Fiber Entrance Facilities means Fiber Entrance Facilities that were in service for DPI-Teleconnect as of March 11, 2005 in those wire centers that, as of such date, met the criteria set forth in Section 4.3.5 below.

4.3.5 DPI-Teleconnect may obtain access to the following:

4.3.5.1 Dark Fiber Transport except on routes connecting a pair of wire centers, each of which contains at least three (3) fiber-based collocators or 24,000 Business access lines.

4.3.6 The Initial Unimpaired Wire Center List setting forth the wire centers meeting the criteria set forth in Section 4.3.5.1 above is set forth in Carrier Notification Letter SN91086185, which is available on BellSouth's Interconnection Web site.

4.3.7 Transition Period Pricing. From March 11, 2005, through the completion of the Transition Period, BellSouth shall charge/collect a rate for DPI-Teleconnect's Embedded Base of Dark Fiber and Embedded Base Dark Fiber Entrance Facilities equal to 115% of the rate paid for that element on June 15, 2004.

4.3.7.1 These rates shall be as set forth in Exhibit A Attachment 2 of the Agreement and this Section 4.3.7.

4.3.8 No later than September 10, 2006 DPI-Teleconnect shall submit spreadsheet(s) identifying all of the Embedded Base of Dark Fiber Transport and Dark Fiber Entrance Facilities to be either disconnected or converted to other BellSouth services as Conversions pursuant to Section 13. The Parties shall negotiate a project schedule for the Conversion of the Embedded Base of Dark Fiber Transport and Dark Fiber Entrance Facilities.

4.3.9 If DPI-Teleconnect submits the spreadsheets specified in Section 4.3.8 for all of its Embedded Base of Dark Fiber Transport and Dark Fiber Entrance Facilities on or before September 10, 2006, Conversions shall be subject to Commission-approved switch-as-is charges.

4.3.10 If DPI-Teleconnect fails to submit the spreadsheet(s) for all of its Embedded Base of Dark Fiber Transport and Dark Fiber Entrance Facilities prior to September 10, 2006, BellSouth will identify DPI-Teleconnect's remaining Embedded Base of Dark Fiber Transport and Dark Fiber Entrance Facilities, if any, and will transition such circuits to the equivalent tariffed BellSouth service(s) subject to the full nonrecurring charges for installation of such BellSouth services as set forth in BellSouth's tariffs.

4.3.11 For Embedded Base of Dark Fiber Transport and Embedded Base Dark Fiber Entrance Facilities converted or transitioned, the applicable recurring tariff charge shall apply to each circuit as of September 11, 2006. The transition of the Embedded Base of Dark Fiber Transport and Embedded Base Dark Fiber Entrance Facilities should be performed in a manner that avoids, or otherwise, minimizes to the extent possible, disruption or degradation to DPI-Teleconnect's customers' service.

5. Prior to submitting an order pursuant to this Agreement for high capacity (DS1 or above) Dedicated Transport or high capacity Loops, DPI-Teleconnect shall undertake a reasonably diligent inquiry to determine whether DPI-Teleconnect is entitled to unbundled access to such Network Elements in accordance with the terms of this Agreement. By submitting any such order, DPI-Teleconnect self-certifies that to the best of DPI-Teleconnect's knowledge, the high capacity Dedicated Transport or high capacity Loop requested is available as a Network Element pursuant to this Agreement. Upon receiving such order, BellSouth shall process the request in reliance upon DPI-Teleconnect's self-certification. To the extent BellSouth believes that such request does not comply with the terms of this Agreement, BellSouth shall seek dispute resolution in accordance with the General Terms and Conditions of this Agreement. If BellSouth prevails in such dispute resolution proceeding, DPI-Teleconnect shall be liable to BellSouth for the difference between the rate for the equivalent BellSouth alternative arrangement and the self certified UNE, plus interest, on such rate differential.

6. BellSouth will not accept UNE orders for de-listed high capacity Loops or Dedicated Transport elements, as applicable, in the wire centers set forth on the Initial Unimpaired Wire Center List.

Issue 4 –What is the appropriate language to implement BellSouth's obligation to provide Section 251 unbundled access to high-capacity loops and dedicated transport and how should the following terms be defined? (i) Business Line; (ii) Fiber-Based Collocator; (iii) Building (iv) route; (v) Is a CLEC entitled to obtain DS3 transport from a Tier 3 wire center to each of two or more Tier 1 or Tier 2 wire centers? (vi) is a CLEC entitled to obtain dark fiber transport from a Tier 3 wire center to each of two or more Tier 1 or Tier 2 wire centers?

7. (i) Business Line

7.1 For purposes of this Attachment 2, a "Business Line" is, as defined in 47 C.F.R. § 51.5, and shall include all UNE Loop lines and digital access lines at full capacity.

7.2 (ii) Fiber-Based Collocation

7.2.1 For purposes of this Attachment 2 a "Fiber-Based Collocator" is, as defined in 47 C.F.R. § 51.5.

7.3 (iii) Building

7.3.1 For purposes of this Attachment 2, the definition of a "Building" is to be determined from a "reasonable person" perspective, but within the context of the telecommunications industry, taking into account the FCC's purpose and rationale behind its current rules.

7.4 (iv) Route

7.4.1 For purposes of this Attachment 2, a "Route" is, as defined in 47 C.F.R. §. 51.319(e).

Issue 6 – Are HDSL–capable copper loops the equivalent of DS1 loops for the purpose of evaluating impairment?

8. 2-wire or 4-wire HDSL-Compatible Loop. This is a designed Loop which meets Carrier Serving Area (CSA) specifications, may be up to 12,000 feet long and may have up to 2,500 feet of bridged tap (inclusive of Loop length). It may be a 2-wire or 4-wire circuit and will come standard with a test point, OC, and a DLR.

9. 4-wire Unbundled DS1 Digital Loop. This is a designed 4-wire Loop that is provisioned according to industry standards for DS1 or Primary Rate ISDN services and will come standard with a test point, OC, and a DLR. A DS1 Loop may be provisioned over a variety of loop transmission technologies including copper, HDSL-based technology or fiber optic transport systems. It will include a 4-wire DS1 Network Interface at the End User's location. For purposes of this Agreement, including the transition of DS1 and DS3 Loops described in Section 1 above, DS1 Loops include 2-wire and 4-wire HDSL-Compatible Loops to which the necessary electronics have been added to provide service speeds of 1.544 megabytes per second.

Issue 10 – Transition of De-listed Network elements to Which No Specified Transition Period Applies. What rates terms and conditions should govern the transition of existing network elements that BellSouth is no longer obligated to provide as Section 251 UNEs to non-Section 251 network elements and other services and (a) what is the proper treatment for such network elements at the end of the transition period,; and (b) what is the appropriate transition period, and what are the appropriate rates, terms and conditions during such transition period, for unbundled high-capacity loops, high capacity transport, and dark fiber transport in and between wire centers that do not meet the FCC's non-impairment standards at this time, but that meet such standards in the future?

10. Except to the extent expressly provided otherwise in this Attachment, DPI-Teleconnect may not maintain unbundled network elements or combinations of unbundled network elements, that are no longer offered pursuant to this Amendment (collectively "Arrangements"). In the event BellSouth determines that DPI-Teleconnect has in place any Arrangements after the Effective Date of this Amendment, BellSouth will provide DPI-Teleconnect with written notice identifying the specific Arrangement(s) which must be converted or disconnected. DPI-Teleconnect shall have thirty (30) days from the date of the notice to submit orders to disconnect or convert the Arrangements. Those circuits to be converted to other BellSouth services shall be subject to nonrecurring charges associated with that conversion. If DPI-Teleconnect disputes BellSouth's identification of Arrangement(s) to be disconnected or converted, DPI-Teleconnect shall send written notice of its dispute within thirty (30) days of Bellsouth's notice. Bellsouth shall not disconnect the disputed Arrangement(s) while the dispute is being resolved. If the Parties are unable to reach a voluntary resolution of the dispute, they may petition the Commission for assistance. If DPI-Teleconnect does not dispute BellSouth's claims or fails to submit orders to disconnect or convert such Arrangements within the established thirty (30)day period, BellSouth will transition such circuits to the equivalent tariffed BellSouth service(s) subject to the full nonrecurring charges for installation of the equivalent tariffed BellSouth services(s) as set forth in Bellsouth's tariffs. The applicable recurring tariff charges shall apply to each circuit upon conversion.

Issue 5 – a) Does the Commission have the authority to determine whether or not BellSouth's application of the FCC's Section 251 non-impairment criteria for high-capacity loops and transport is appropriate?

b) What procedures should be used to identify those wire centers that satisfy the FCC's Section 251 non-impairment criteria for high-capacity loops and transport?
c) What language should be included in agreements to reflect the procedures identified in (b)?

11. Modifications and Updates to the Wire Center List and Subsequent Transition Periods

11.1 DS1 or DS3 loops, or Dedicated Transport in Wire Centers that Meet the TRRO Unimpaired Criteria in the Future

11.2 In the event BellSouth identifies additional wire centers that meet the criteria set forth in Sections 1.4.1 (DS1 loops), 1.4.2 (DS3 loops), 4.2.5.1 (DS1 transport) and 4.2.5.2 (DS3 transport) but that were not included in the Initial unimpaired Wire Center List adopted by the Commission, BellSouth shall include such additional wire centers in a carrier notification letter (CNL). Each such list of additional wire centers shall be considered a "Subsequent Wire Center List."

11.3 DPI-Teleconnect shall have thirty (30) days to dispute the additional wire centers listed on BellSouth's CNL.

11.3.1 Absent any such dispute being filed, effective thirty (30) business days after the date of a BellSouth CNL providing a Subsequent Wire Center List, BellSouth shall not be required to unbundle DS1 and/or DS3 Loops or DS1 and/or DS3 Transport, as applicable, in such additional wire center(s).

11.3.2 BellSouth shall make available DS1 and DS3 Loops and Transport that were in service for DPI-Teleconnect in a wire center on the Subsequent Wire Center List as of the tenth (10th) business day after the date of BellSouth's CNL identifying the Subsequent Wire Center List (Subsequent Embedded Base) until ninety (90) days after the tenth (10th) business day from the date of BellSouth's CNL identifying the Subsequent Wire Center List (Subsequent Transition Period).

11.3.3 Subsequent disconnects or loss of customers shall be removed from the Subsequent Embedded Base.

11.3.4 The rates that shall apply to the Subsequent Embedded Base during the Subsequent Transition Period shall be as set forth in Sections 1.6 (DS1 and DS3 loops), 4.2.7 (DS1 and DS3 Transport).

11.3.5 No later than forty (40) days from BellSouth's CNL identifying the Subsequent Wire Center List, DPI-Teleconnect shall submit a spreadsheet(s) identifying the Subsequent Embedded Base of circuits to be disconnected or converted to other BellSouth services. The Parties shall negotiate a project schedule for the Conversion of the Subsequent Embedded Base.

11.3.5.1 If DPI-Teleconnect fails to submit the spreadsheet(s) specified in Section 11.3.5 above for all of its Subsequent Embedded Base within forty (40) days after the date of BellSouth's CNL identifying the Subsequent Wire Center List, BellSouth will identify DPI-Teleconnect's remaining Subsequent Embedded Base, if any, and will transition such circuits to the equivalent tariffed BellSouth service(s). Those circuits identified and transitioned by BellSouth shall be subject to the full nonrecurring charges for installation of the equivalent tariffed BellSouth service as set forth in BellSouth's tariffs.

11.3.5.2 For Subsequent Embedded Base circuits converted pursuant to Section 11.3.5 above or transitioned pursuant to Section 11.3.5.1 above, the applicable recurring tariff charges shall apply as of the earlier of the date each circuit is converted or transitioned, as applicable, or the first day after the end of the Subsequent Transition Period.

11.3.6 Dark Fiber Transport in Wire Centers that Meet the TRRO Unimpaired Criteria in the Future

11.3.6.1 In the event BellSouth identifies additional wire centers that meet the criteria set forth in Section 4.3.5 above, but that were not included in the Initial unimpaired Wire Center List adopted by the Commission, BellSouth shall include such additional wire centers in a CNL. Each such list of additional wire centers shall be considered a "Subsequent Wire Center List."

11.3.6.2 DPI-Teleconnect shall have thirty (30) days to dispute the additional wire centers listed on BellSouth's CNL.

11.3.6.3 Absent any such dispute being filed, effective thirty (30) business days after the date of a BellSouth CNL providing a Subsequent Wire Center List, BellSouth shall not be required to unbundle Dark Fiber Transport, as applicable, in such additional wire center(s).

11.3.6.4 BellSouth shall make available Dark Fiber Transport that were in service for DPI-Teleconnect in a wire center on the Subsequent Wire Center List as of the tenth (10th) business day after the date of BellSouth's CNL identifying the Subsequent Wire Center List (Subsequent Embedded Base) until ninety (90) days after the tenth (10th) business day from the date of BellSouth's CNL identifying the Subsequent Wire Center List (Subsequent Transition Period).

11.3.6.5 Subsequent disconnects or loss of customers shall be removed from the Subsequent Embedded Base.

11.3.6.6 The rates that shall apply to the Subsequent Embedded Base during the Subsequent Transition Period shall be as set forth in Section 4.3.7 (Dark Fiber Transport).

11.3.6.7 No later than forty (40) days from BellSouth's CNL identifying the Subsequent Wire Center List, DPI-Teleconnect shall submit a spreadsheet(s) identifying the Subsequent Embedded Base of circuits to be disconnected or converted to other BellSouth services. The Parties shall negotiate a project schedule for the Conversion of the Subsequent Embedded Base.

11.3.6.8 If DPI-Teleconnect fails to submit the spreadsheet(s) specified in Section 11.3.6.7 above for all of its Subsequent Embedded Base within forty (40) days after the date of BellSouth's CNL identifying the Subsequent Wire Center List, BellSouth will identify DPI-Teleconnect's remaining Subsequent Embedded Base, if any, and will transition such circuits to the equivalent tariffed BellSouth service(s). Those circuits identified and transitioned by BellSouth shall be subject to the full nonrecurring charges for installation of the equivalent tariffed BellSouth service as set forth in BellSouth's tariffs.

11.3.6.8.1 For Subsequent Embedded Base circuits converted pursuant to Section 11.3.6.7 above or transitioned pursuant to Section 11.3.6.8 above, the applicable recurring tariff charges shall apply as of the earlier of the date each circuit is converted or transitioned, as applicable, or the first day after the end of the Subsequent Transition Period.

11.3.7 In the event that (1) BellSouth designates a wire center as unimpaired, (2) DPI-Teleconnect converts existing UNEs to other services or orders new services as services other than UNEs, (3) DPI-Teleconnect otherwise would have been entitled to UNEs in such wire center at the time alternative services provisioned, and (4) BellSouth acknowledges or a state or federal agency regulatory body with authority determines that, at the time BellSouth designated such wire center as unimpaired, such wire center did not meet the FCC's unimpairment criteria, then upon request of DPI-Teleconnect, BellSouth shall transition to UNEs any alternative services in such wire center that were established after such wire center was designated as unimpaired. In such instances, BellSouth shall refund DPI-Teleconnect the difference between the rate paid by DPI-Teleconnect for such services and the applicable UNE rate, including but not limited to any charges associated with the unnecessary conversion from UNE to other wholesale services.

Issue 14 – What is the scope of commingling allowed under the FCC's rules and orders and what language should be included in Interconnection Agreements to implement commingling (including rates)?

12. Commingling of Services

12.1 Commingling means the connecting, attaching, or otherwise linking of a Network Element, or a Combination, to one or more Telecommunications Services or facilities that DPI-Teleconnect has obtained at wholesale from BellSouth, or the combining of a Network Element or Combination with one or more such wholesale Telecommunications Services or facilities. The wholesale services that can be commingled with Network Elements or a Combination include network elements required to be unbundled under Section 271. However, BellSouth will not commingle Section 271 element with Network Elements or Combinations pursuant to this Agreement. DPI-Teleconnect must comply with all rates, terms or conditions applicable to such wholesale Telecommunications Services or facilities.

12.2 Subject to the limitations set forth elsewhere in this Attachment, BellSouth shall not deny access to a Network Element or a Combination on the grounds that one or more of the elements: 1) is connected to, attached to, linked to, or combined with such a facility or service obtained from BellSouth; or 2) shares part of BellSouth's network with access services or inputs for mobile wireless services and/or interexchange services.

12.3 Unless expressly prohibited by the terms of this Attachment, BellSouth shall permit DPI-Teleconnect to Commingle an Unbundled Network Element or a Combination of unbundled Network Elements with wholesale services obtained from BellSouth, services obtained from third parties or facilities provided by DPI-Teleconnect. For purposes of example only, DPI-Teleconnect may Commingle unbundled Network Elements or Combinations of unbundled Network Elements with wholesale services including switched and special access services, or services purchased under resale arrangements with BellSouth.

12.4 Unless otherwise agreed to by the Parties, the Network Element portion of a commingled circuit will be billed at the rates set forth in Exhibit B and the remainder of the circuit or service will be billed in accordance with BellSouth's tariffed rates or rates set forth by separate agreement.

12.5 When multiplexing equipment is attached to a commingled arrangement, the multiplexing equipment will be billed from the same agreement or the tariff as the higher bandwidth circuit. Central Office Channel Interfaces (COCI) will be billed from the same agreement or tariff as the lower bandwidth circuit.

12.6 Terms and conditions for order cancellation charges and Service Date Advancement Charges will apply in accordance with Attachment 2. The charges shall be as se forth in Exhibit A of Attachment 2 of the parties Agreement.

Issue 15 – Is BellSouth required to provide conversion of special access circuits to UNE pricing, and, if so, what rates, terms and conditions and during what timeframe should such new requests for such conversions be effectuated?

13. Conversion of Wholesale Services to Network Elements or Network Elements to Wholesale Services

13.1 Upon request, BellSouth shall convert a wholesale service, or group of wholesale services, to the equivalent Network Element or Combination that is available to DPI-Teleconnect pursuant to Section 251 of the Act and under this Agreement, or convert a Network Element or Combination that is available to DPI-Teleconnect pursuant to Section 251 of the Act and under this Agreement to an equivalent wholesale service or group of wholesale services offered by BellSouth (collectively "Conversion"). BellSouth shall charge the applicable nonrecurring switch-as-is rates for Conversions to specific Network Elements or Combinations found in Exhibit B. BellSouth shall also charge the same nonrecurring switch-as-is rates when converting from Network Elements or Combinations. Any rate change resulting from the Conversion will be effective as of the next billing cycle following BellSouth's receipt of a complete and accurate Conversion request from DPI-Teleconnect. Any change from a wholesale service/group of wholesale services to a Network Element/Combination, or from a Network Element/Combination to a wholesale service/group of wholesale services that requires a physical rearrangement will not be considered to be a Conversion for purposes of this Agreement. BellSouth will not require physical rearrangements if the Conversion can be completed through record changes only. Orders for Conversions will be handled in accordance with the guidelines set forth in the Ordering Guidelines and Processes and CLEC Information Packages.

13.2 Any outstanding conversions shall be effective on or after the effective date of this Agreement.

Issue 19: LINE SPLITTING: What is the appropriate ICA language to implement BellSouth's obligations with regard to line splitting?

14. Line Splitting

14.1 Line splitting shall mean that DPI-Teleconnect purchases a whole Loop and provides the splitter to provide voice and data services through an arrangement with a third party CLEC, who is either the provider of data services (a Data LEC) or the provider of voice services (a Voice CLEC) to deliver voice and data service to End Users over the same Loop. The Voice CLEC and Data LEC may be the same or different carriers.

14.2 Line Splitting – UNE-L. In the eventDPI-Teleconnect provides its own switching or obtains switching from a third party, DPI-Teleconnect may engage in line splitting arrangements with another CLEC using a splitter, provided by DPI-Teleconnect, in a Collocation Space at the central office where the Loop terminates into a distribution frame or its equivalent.

14.2.1 Provisioning Line Splitting and Splitter Space – UNE-L

14.2.1.1 DPI-Teleconnect provides the splitter when providing Line Splitting with UNE-L. When DPI-Teleconnect or its authorized agent owns the splitter, Line Splitting requires the following: a loop from NID at the End User's location to the serving wire center and terminating into a distribution frame or its equivalent.

14.2.1.2 An unloaded 2-wire copper Loop must serve the customer. The meet point for the Voice CLEC and the Data LEC is the point of termination on the MDF for the Data LEC's cable and pairs.

14.3 To order Line Splitting utilizing UNE-L, DPI-Teleconnect or its authorized agent must have a DSLAM collocated in the central office that serves the End User of such Loop.

14.3.1 DPI-Teleconnect or its authorized agent may purchase, install and maintain central office POTS splitters in its collocation arrangements. DPI-Teleconnect or its authorized agent may use such splitters for access to its customers and to provide digital line subscriber services to its customers using the high frequency spectrum of the UNE-L. Existing Collocation rules and procedures and the terms and conditions relating to Collocation set forth in Attachment 4 Central Office shall apply.

14.3.2 Any splitters installed by DPI-Teleconnect in its collocation arrangement shall comply with ANSI T1.413, Annex E, or any future ANSI splitter Standards. DPI-Teleconnect may install any splitters that BellSouth deploys or permits to be deployed for itself or any BellSouth affiliate.

14.4 Maintenance – Line Splitting – UNE-L

14.4.1 BellSouth will be responsible for repairing voice troubles and the troubles with the physical loop between the NID at the End User's premises and the termination point.

14.5 Indemnification

14.5.1 DPI-Teleconnect shall indemnify, defend and hold harmless BellSouth from and against any claims, losses, and costs which arise out of actions related to the other service provider (i.e. CLEC party to the line splitting arrangement who is not DPI-Teleconnect), except to the extent caused by BellSouth's gross negligence or willful misconduct.

15. 911 and E911 Databases

15.1 BellSouth shall provide DPI-Teleconnect with nondiscriminatory access to 911 and E911 databases on an unbundled basis, in accordance with 47 C.F.R. § 51.319 (f).

15.2 The ALI/DMS database contains End User information (including name, address, telephone information, and sometimes special information from the local service provider or End User) used to determine to which PSAP to route the call. The ALI/DMS database is used to provide enhanced routing flexibility for E911. DPI-Teleconnect will be required to provide the BellSouth 911 database vendor daily service order updates to E911 database in accordance with Section 15.3.1 below.

15.3 Technical Requirements

15.3.1 BellSouth's 911 database vendor shall provide DPI-Teleconnect the capability of providing updates to the ALI/DMS database through a specified electronic interface. DPI-Teleconnect shall contact BellSouth's 911 database vendor directly to request interface. DPI-Teleconnect shall provide updates directly to BellSouth's 911 database vendor on a daily basis. Updates shall be the responsibility of DPI-Teleconnect and BellSouth shall not be liable for the transactions between DPI-Teleconnect and BellSouth's 911 database vendor.

15.3.2 It is DPI-Teleconnect's responsibility to retrieve and confirm statistical data and to correct errors obtained from BellSouth's 911 database vendor on a daily basis. All errors will be assigned a unique error code and the description of the error and the corrective action is described in the CLEC Users Guide for Facility Based Providers that is found on the BellSouth Interconnection Web site.

15.3.3 DPI-Teleconnect shall conform to the BellSouth standards as described in the CLEC Users Guide to E911 for Facilities Based Providers that is located on the BellSouth's Interconnection Web site.

15.3.4 Stranded Unlocks are defined as End User records in BellSouth's ALI/DMS database that have not been migrated for over ninety (90) days to DPI-Teleconnect, as a new provider of local service to the End User. Stranded Unlocks are those End User records that have been "unlocked" by the previous local exchange carrier that provided service to the End User and are open for DPI-Teleconnect to assume responsibility for such records.

15.3.5 Based upon End User record ownership information available in the NPAC database, BellSouth shall provide a Stranded Unlock annual report to DPI-Teleconnect that reflects all Stranded Unlocks that remain in the ALI/DMS database for over ninety (90) days. DPI-Teleconnect shall review the Stranded Unlock report, identify its End User records and request to either delete such records or migrate the records to DPI-Teleconnect within two (2) months following the date of the Stranded Unlock report provided by BellSouth. DPI-Teleconnect shall reimburse BellSouth for any charges BellSouth's database vendor imposes on BellSouth for the deletion of DPI-Teleconnect's records.

15.4 911 PBX Locate Service®. 911 PBX Locate Service is comprised of a database capability and a separate transport component.

15.5 Description of Product. The transport component provides a dedicated trunk path from a Private Branch Exchange (PBX) switch to the appropriate BellSouth 911 tandem.

15.6 The database capability allows DPI-Teleconnect to offer an E911 service to its PBX End Users that identifies to the PSAP the physical location of the DPI-Teleconnect PBX 911 End User station telephone number for the 911 call that is placed by the End User.

15.7 DPI-Teleconnect may order either the database capability or the transport component as desired or DPI-Teleconnect may order both components of the service.

15.8 911 PBX Locate Database Capability. DPI-Teleconnect's End User or DPI-Teleconnect's End User's database management agent (DMA) must provide the End User PBX station telephone numbers and corresponding address and location data to BellSouth's 911 database vendor. The data will be loaded and maintained in BellSouth's ALI database.

15.9 Ordering, provisioning, testing and maintenance shall be provided by DPI-Teleconnect pursuant to the 911 PBX Locate Marketing Service Description (MSD) that is located on the BellSouth Interconnection Web site.

15.10 DPI-Teleconnect's End User, or DPI-Teleconnect's End User database management agent must provide ongoing updates to BellSouth's 911 database

vendor within a commercially reasonable timeframe of all PBX station telephone number adds, moves and deletions. It will be the responsibility of DPI-Teleconnect to ensure that the End User or DMA maintain the data pertaining to each End User's extension managed by the 911 PBX Locate Service product. DPI-Teleconnect should not submit telephone number updates for specific PBX station telephone numbers that are submitted by DPI-Teleconnect's End User, or DPI-Teleconnect's End User DMA under the terms of 911 PBX Locate product.

15.11 DPI-Teleconnect must provision all PBX station numbers in the same LATA as the E911 tandem.

15.12 DPI-Teleconnect agrees to release, indemnify, defend and hold harmless BellSouth from any and all loss, claims, demands, suits, or other action, or any liability whatsoever, whether suffered, made, instituted or asserted by DPI-Teleconnect's End User or by any other party or person, for any personal injury to or death of any person or persons, or for any loss, damage or destruction of any property, whether owned by DPI-Teleconnect or others, or for any infringement or invasion of the right of privacy of any person or persons, caused or claimed to have been caused, directly or indirectly, by the installation, operation, failure to operate, maintenance, removal, presence, condition, location or use of PBX Locate Service features or by any services which are or may be furnished by BellSouth in connection therewith, including but not limited to the identification of the telephone number, address or name associated with the telephone used by the party or parties accessing 911 services using 911 PBX Locate Service hereunder, except to the extent caused by BellSouth's gross negligence or willful misconduct. DPI-Teleconnect is responsible for assuring that its authorized End Users comply with the provisions of these terms and that unauthorized persons do not gain access to or use the 911 PBX Locate Service through user names, passwords, or other identifiers assigned to DPI-Teleconnect's End User or DMA pursuant to these terms. Specifically, DPI-Teleconnect's End User or DMA must keep and protect from use by any unauthorized individual identifiers, passwords, and any other security token(s) and devices that are provided for access to this product.

15.13 DPI-Teleconnect may only use BellSouth PBX Locate Service solely for the purpose of validating and correcting 911 related data for DPI-Teleconnect's End Users' telephone numbers for which it has direct management authority.

15.14 911 PBX Locate Transport Component. The 911 PBX Locate Service transport component requires DPI-Teleconnect to order a CAMA type dedicated trunk from DPI-Teleconnect's End User premise to the appropriate BellSouth 911 tandem pursuant to the following provisions.

15.15 Except as otherwise set forth below, a minimum of two (2) End User specific, dedicated 911 trunks are required between the DPI-Teleconnect's End User

premise and the BellSouth 911 tandem as described in BellSouth's Technical Reference (TR) 73576 and in accordance with the 911 PBX Locate Marketing Service Description located on the BellSouth Interconnection Web site. DPI-Teleconnect is responsible for connectivity between the End User's PBX and DPI-Teleconnect's switch or POP location. DPI-Teleconnect will then order 911 trunks from their switch or POP location to the BellSouth 911 tandem. The dedicated trunks shall be, at a minimum, DS0 level trunks configured as part of a digital interface (delivered over a DPI-Teleconnect purchased DS1 facility that hands off at a DS1 or higher level digital or optical interface). DPI-Teleconnect is responsible for ensuring that the PBX switch is capable of sending the calling station's Direct Inward Dial (DID) telephone number to the BellSouth 911 tandem in a specified Multi-frequency (MF) Address Signaling Protocol. If the PBX switch supports Primary Rate ISDN (PRI) and the calling stations are DID numbers, then the 911 call can be transmitted using PRI, and there will be no requirement for the PBX Locate Transport component.

15.16 Ordering and Provisioning. DPI-Teleconnect will submit an Access Service Request (ASR) to BellSouth to order a minimum of two (2) End User specific 911 trunks from its switch or POP location to the BellSouth 911 tandem.

15.17 Testing and maintenance shall be provided by DPI-Teleconnect pursuant to the 911 PBX Locate Marketing Service description that is located on the BellSouth Interconnection Web site.

15.18 Rates. Rates for the 911 PBX Locate Service database component are set forth in Exhibit C. Trunks and facilities for 911 PBX Locate transport component may be ordered by DPI-Teleconnect pursuant to the terms and conditions set forth in Attachment 2 of the Agreement.

Issue 23 - What is the appropriate language to implement BellSouth's obligation, if any, to offer unbundled access to newly deployed or "greenfield" fiber loops, including fiber loops deployed to the minimum point of entry (MPOE) of a multiple dwelling unit that is predominantly residential and what, if any impact does the ownership of the inside wiring from the MPOE to each end user have one this obligation?

Issue 28: What is the appropriate language, if any, to address access to overbuild deployments of fiber to the home and fiber to the curb facilities?

16. Fiber to the Home (FTTH) loops are local loops consisting entirely of fiber optic cable, whether dark or lit, serving an customer's premises or, in the case of predominantly residential multiple dwelling units (MDUs), a fiber optic cable, whether dark or lit, that extends to the MDU minimum point of entry (MPOE).

17. Fiber to the Curb (FTTC) loops are local loops consisting of fiber optic cable connecting to a copper distribution plant that is not more than five hundred (500) feet from the customer's premises or, in the case of predominantly residential MDUs, not more than five hundred (500) feet from the MDU's MPOE. The fiber optic cable in a FTTC loop must connect to a copper distribution plant at a serving area interface from which every other copper distribution subloop also is not more than five hundred (500) feet from the respective customer's premises.

18. Greenfield Requirements: In new build (Greenfield) areas, where BellSouth has only deployed FTTH/FTTC facilities, BellSouth is under no obligation to provide such FTTH and FTTC Loops. FTTH facilities include fiber loops deployed to the MPOE of a MDU that is predominately residential regardless of the ownership of the inside wiring from the MPOE to each customer's in the MDU.

18.1 Overbuild Requirements: In FTTH/FTTC overbuild situations where Bellsouth also has copper loops, BellSouth will make those copper loops available to CLEC on an unbundled basis, until such time as BellSouth chooses to retire those copper Loops using the FCC's network disclosure requirements. In these cases, BellSouth will offer a 64 Kbps second voice grade channel over its FTTH/FTTC facilities. BellSouth's retirement of copper loops must comply with Applicable Law.

18.2 DS1/DS3 Requirements: Notwithstanding the above, nothing in this Section shall limit BellSouth's obligation to offer CLECs unbundled DS1 and DS3 loops (or loop/transport combination) in any wire center where BellSouth is required to provide such loop facilities.

Issue 24: What is the appropriate ICA language to implement BellSouth's obligation to provide unbundled access to hybrid loops?

19. Hybrid loops are defined in the federal rules at 47 CFR §51.319(a)(2) as local loops, composed of both fiber optic cable, usually in the feeder plant, and copper twisted wire or cable, usually in the distribution plant. BellSouth shall provide DPI-Teleconnectwith nondiscriminatory access to the time division multiplexing features, functions and capabilities of such hybrid loop, on an unbundled basis to establish a complete transmission path between BellSouth's central office and an customer's premises, but BellSouth is not required to provide access to the packet switched features, functions and capabilities of its hybrid loops.

20. Routine Network Modifications

20.1 BellSouth will perform Routine Network Modifications (RNM) in accordance with FCC 47 CFR 51.319 (a)(7) and (e)(4) for Loops and Dedicated Transport provided under this Attachment. If BellSouth has anticipated such RNM and performs them during normal operations and has recovered the costs for performing such modifications through the rates set forth in Exhibit A Attachment 2 of the Agreement, then BellSouth will perform such RNM at no additional charge.

20.2 RNM shall be performed within the intervals established for the Network Element and subject to the performance measurements and associated remedies set forth in Attachment 9 to the extent such RNM were anticipated in the setting of such intervals. If BellSouth has not anticipated a requested network modification as being an RNM and has not recovered the costs of such RNM in the rates set forth in Exhibit A, then such request will be handled as a project on an individual case basis. BellSouth will provide a price quote for the request and, upon receipt of payment from DPI-Teleconnect, BellSouth will perform the RNM.

20.3 To the extent BellSouth claims that any charge is due for any requested RNM and DPI-Teleconnect disputes such charge, BellSouth will file a rate application and supporting documentation with the Commission for approval.

21. Line Conditioning

21.1 Definition: Line Conditioning is defined as the removal from a copper Loop or copper Subloop of any device that could diminish the capability of the Loop or Subloop to deliver high-speed switched wireline telecommunications capability, including digital subscriber line service. Such devices include, but are not limited to, bridges taps, load coils, low pass filters, and range extenders.

21.2 BellSouth will remove load coils only on copper Loops and Subloops that are less than eighteen thousand (18,000) feet in length.

21.3 Any copper loop being ordered by DPI-Teleconnect which has over 6,000 feet of combined bridged tap will be modified, upon request from DPI-Teleconnect, so that the loop will have a maximum of 6,000 feet of bridged tap. This modification will be performed at no additional charge to DPI-Teleconnect. Line conditioning orders that require the removal of other bridged tap that serves no network design purpose on a copper Loop that will result in a combined total of bridged tap between two thousand five hundred (2,500) and six thousand (6,000) feet will be performed at the rates set forth in Exhibit A to Attachment 2 of the Agreement.

21.4 DPI-Teleconnect may request removal of any unnecessary and non excessive bridged tap (bridged tap between zero (0) and two thousand five hundred (2,500) feet which serves no network design purpose), at rates pursuant to BellSouth's SC Process as mutually agreed to by the Parties.

8.1 Rates for Unbundled Loop Modification (ULM) are as set forth in Exhibit A to Attachment 2 of the Agreement.

21.5 BellSouth will not modify a Loop in such a way that it no longer meets the technical parameters of the original Loop type (e.g., voice grade, ADSL, etc.) being ordered

21.6 If DPI-Teleconnect requests ULM on a reserved facility for a new Loop order, BellSouth may perform a pair change and provision a different Loop facility in lieu of the reserved facility with ULM if feasible. The Loop provisioned will meet or exceed specifications of the requested Loop facility as modified. DPI-Teleconnect will not be charged for ULM if a different Loop is provisioned. For Loops that require a DLR or its equivalent, BellSouth will provide LMU detail of the Loop provisioned.

21.7 DPI-Teleconnect will request Loop make up information pursuant to this Attachment prior to submitting a service inquiry and/or a LSR for the Loop type that DPI-Teleconnect desires BellSouth to condition.

21.8 When requesting ULM for a Loop that BellSouth has previously provisioned for DPI-Teleconnect, DPI-Teleconnect will submit a SI to BellSouth. If a spare Loop

facility that meets the Loop modification specifications requested by DPI-Teleconnect is available at the location for which the ULM was requested, DPI-Teleconnect will have the option to change the Loop facility to the qualifying spare facility rather than to provide ULM. In the event that BellSouth changes the Loop facility in lieu of providing ULM, DPI-Teleconnect will not be charged for ULM but will only be charged the service order charges for submitting an order.

Issue 29: What is the appropriate ICA language to implement BellSouth's EEL audit rights, if any, under the TRO?

22. EELs Audit provisions

22.1 BellSouth may, on an annual basis audit DPI-Teleconnect's records based on cause, in order to verify compliance with the high capacity EEL eligibility criteria. To invoke its limited right to audit, BellSouth shall send a written Notice of Audit to DPI-Teleconnectstating its concern that DPI-Teleconnect is not complying with the service eligibility requirements. Such Notice of Audit will be delivered to DPI-Teleconnect no less than thirty (30) calendar days prior to the date upon which BellSouth seeks to commence an audit and shall include a listing of the circuits for which BellSouth alleges noncompliance, including all supporting documentation and a list of three auditors from which DPI-Teleconnect may choose one to conduct the audit.

22.2 The auditor selected shall be an independent third party retained and paid for by BellSouth. The audit must be performed in accordance with the standards established by the American Institute for Certified Public Accountants (AICPA) which will require the auditor to perform an "examination engagement" and issue an opinion regarding DPI-Teleconnect's compliance with the high capacity EEL eligibility criteria. AICPA standards and other AICPA requirements will be used to determine the independence of an auditor. The independent auditor's report will conclude whether DPI-Teleconnect complied in all material respects with the applicable service eligibility criteria. Consistent with standard auditing practices, such audits require compliance testing designed by the independent auditor.

22.3 To the extent the independent auditor's report concludes that DPI-Teleconnect failed to comply with the service eligibility criteria, DPI-Teleconnect must true-up any difference in payments, convert all noncompliant circuits to the appropriate service, and make the correct payments on a going forward basis.

22.4 To the extent the independent auditor's report concludes that DPI-Teleconnect failed to comply in all material respects with the service eligibility criteria, DPI-Teleconnect shall reimburse BellSouth for the cost of the independent auditor. To the extent the independent auditor's report concludes that DPI-Teleconnect did comply in all material respects with the service eligibility criteria, BellSouth will reimburse DPI-Teleconnect for its reasonable and demonstrable costs associated with the audit. DPI-Teleconnect will maintain appropriate documentation to support its certifications.

23. DPI-Teleconnect shall not obtain a Network Element for the exclusive provision of mobile wireless services or interexchange services.

24. Facilities that do not terminate at a demarcation point at an End User premises, including, by way of example, but not limited to, facilities that terminate to

another carrier's switch or premises, a cell site, Mobile Switching Center or base station, do not constitute local Loops under Section 251, except to the extent that DPI-Teleconnect may require Loops to such locations for the purpose of providing telecommunications services to its personnel at those locations.

25. Subloop Elements.

25.1 Where facilities permit, BellSouth shall offer access to its Unbundled Subloop (USL) elements as specified herein.

25.2 Unbundled Subloop Distribution (USLD)

25.2.1 The USLD facility is a dedicated transmission facility that BellSouth provides from an End User's point of demarcation to a BellSouth cross-connect device. The BellSouth cross-connect device may be located within a remote terminal (RT) or a stand-alone cross-box in the field or in the equipment room of a building. The USLD media is a copper twisted pair that can be provisioned as a 2-wire or 4-wire facility. BellSouth will make available the following subloop distribution offerings where facilities exist:

USLD – Voice Grade (USLD-VG)
Unbundled Copper Subloop (UCSL)
USLD – Intrabuilding Network Cable (USLD-INC (aka riser cable))

25.2.2 USLD-VG is a copper subloop facility from the cross-box in the field up to and including the point of demarcation at the End User's premises and may have load coils.

25.2.3 UCSL is a copper facility eighteen thousand (18,000) feet or less in length provided from the cross-box in the field up to and including the End User's point of demarcation. If available, this facility will not have any intervening equipment such as load coils between the End User and the cross-box.

25.2.4 If DPI-Teleconnect requests a UCSL and it is not available, DPI-Teleconnect may request the copper Subloop facility be modified pursuant to the ULM process to remove load coils and/or excessive bridged taps. If load coils and/or excessive bridged taps are removed, the facility will be classified as a UCSL.

25.2.5 USLD-INC is the distribution facility owned or controlled by BellSouth inside a building or between buildings on the same property that is not separated by a public street or road. USLD-INC includes the facility from the cross-connect device in the building equipment room up to and including the point of demarcation at the End User's premises.

25.2.6 Upon request for USLD-INC from DPI-Teleconnect, BellSouth will install a cross-connect panel in the building equipment room for the purpose of accessing USLD-INC pairs from a building equipment room. The cross-connect panel will

function as a single point of interconnection (SPOI) for USLD-INC and will be accessible by multiple carriers as space permits. BellSouth will place cross-connect blocks in twenty five (25) pair increments for DPI-Teleconnect's use on this cross-connect panel. DPI-Teleconnect will be responsible for connecting its facilities to the twenty five (25) pair cross-connect block(s).

25.2.7 For access to Voice Grade USLD and UCSL, DPI-Teleconnect shall install a cable to the BellSouth cross-box pursuant to the terms and conditions for physical collocation for remote sites set forth in Attachment 4. This cable would be connected by a BellSouth technician within the BellSouth cross-box during the set-up process. DPI-Teleconnect's cable pairs can then be connected to BellSouth's USL within the BellSouth cross-box by the BellSouth technician.

25.2.8 Through the SI process, BellSouth will determine whether access to USLs at the location requested by DPI-Teleconnect is technically feasible and whether sufficient capacity exists in the cross-box. If existing capacity is sufficient to meet DPI-Teleconnect's request, then BellSouth will perform the site set-up as described in the CLEC Information Package, located at BellSouth's Interconnection Web site: www.interconnection.bellsouth.com/products/html/unes.html.

25.2.9 The site set-up must be completed before DPI-Teleconnect can order Subloop pairs. For the site set-up in a BellSouth cross-connect box in the field, BellSouth will perform the necessary work to splice DPI-Teleconnect's cable into the cross-connect box. For the site set-up inside a building equipment room, BellSouth will perform the necessary work to install the cross-connect panel and the connecting block(s) that will be used to provide access to the requested USLs.

25.2.10 Once the site set-up is complete, DPI-Teleconnect will request Subloop pairs through submission of a LSR form to the LCSC. OC is required with USL pair provisioning when DPI-Teleconnect requests reuse of an existing facility, and the OC charge shall be billed in addition to the USL pair rate. For expedite requests by DPI-Teleconnect for Subloop pairs, expedite charges will apply for intervals less than five (5) days.

25.2.11 USLs will be provided in accordance with BellSouth's TR73600 Unbundled Local Loop Technical Specifications.

25.3 Unbundled Network Terminating Wire (UNTW)

25.3.1 UNTW is unshielded twisted copper wiring that is used to extend circuits from an intra-building network cable terminal or from a building entrance terminal to an individual End User's point of demarcation. It is the final portion of the Loop that in multi-subscriber configurations represents the point at which the network branches out to serve individual subscribers.

25.3.2 This element will be provided in MDUs and/or Multi-Tenants Units (MTUs) where either Party owns wiring all the way to the End User's premises. Neither Party will provide this element in locations where the property owner provides its own wiring to the End User's premises, where a third party owns the wiring to the End User's premises.

25.3.3 Requirements

29.3.3.1 On a multi-unit premises, upon request of the other Party (Requesting Party), the Party owning the network terminating wire (Provisioning Party) will provide access to UNTW pairs on an Access Terminal that is suitable for use by multiple carriers at each Garden Terminal or Wiring Closet.

29.3.3.2 The Provisioning Party shall not be required to install new or additional NTW beyond existing NTW to provision the services of the Requesting Party.

29.3.3.3 In existing MDUs and/or MTUs in which BellSouth does not own or control wiring (INC/NTW) to the End Users premises, and DPI-Teleconnect does own or control such wiring, DPI-Teleconnect will install UNTW Access Terminals for BellSouth under the same terms and conditions as BellSouth provides UNTW Access Terminals to DPI-Teleconnect.

29.3.3.4 In situations in which BellSouth activates a UNTW pair, BellSouth will compensate DPI-Teleconnect for each pair activated commensurate to the price specified in DPI-Teleconnect's Agreement.

29.3.3.5 Upon receipt of the UNTW SI requesting access to the Provisioning Party's UNTW pairs at a multi-unit premises, representatives of both Parties will participate in a meeting at the site of the requested access. The purpose of the site visit will include discussion of the procedures for installation and location of the Access Terminals. By request of the Requesting Party, an Access Terminal will be installed either adjacent to each of the Provisioning Party's Garden Terminal or inside each Wiring Closet. The Requesting Party will deliver and connect its central office facilities to the UNTW pairs within the Access Terminal. The Requesting Party may access any available pair on an Access Terminal. A pair is available when a pair is not being utilized to provide service or where the End User has requested a change in its local service provider to the Requesting Party. Prior to connecting the Requesting Party's service on a pair previously used by the Provisioning Party, the Requesting Party is responsible for ensuring the End User is no longer using the Provisioning Party's service or another CLEC's service before accessing UNTW pairs.

29.3.3.6 Access Terminal installation intervals will be established on an individual case basis.

29.3.3.7 The Requesting Party is responsible for obtaining the property owner's permission for the Provisioning Party to install an Access Terminal(s) on behalf of the Requesting Party. The submission of the SI by the Requesting Party will serve as certification by the Requesting Party that such permission has been obtained. If the property owner objects to Access Terminal installations that are in progress or within thirty (30) days after completion and demands removal of Access Terminals, the Requesting Party will be responsible for costs associated with removing Access Terminals and restoring the property to its original state prior to Access Terminals being installed.

29.3.3.8 The Requesting Party shall indemnify and hold harmless the Provisioning Party against any claims of any kind that may arise out of the Requesting Party's failure to obtain the property owner's permission. The Requesting Party will be billed for nonrecurring and recurring charges for accessing UNTW pairs at the time the Requesting Party activates the pair(s). The Requesting Party will notify the Provisioning Party within five (5) business days of activating UNTW pairs using the LSR form.

29.3.3.9 If a trouble exists on a UNTW pair, the Requesting Party may use an alternate spare pair that serves that End User if a spare pair is available. In such cases, the Requesting Party will re-terminate its existing jumper from the defective pair to the spare pair. Alternatively, the Requesting Party will isolate and report troubles in the manner specified by the Provisioning Party. The Requesting Party must tag the UNTW pair that requires repair. If the Provisioning Party dispatches a technician on a reported trouble call and no UNTW trouble is found, the Provisioning Party will charge Requesting Party for time spent on the dispatch and testing the UNTW pair(s).

29.3.3.10 If the Requesting Party initiates the Access Terminal installation and the Requesting Party has not activated at least ten percent (10%) of the capacity of the Access Terminal installed pursuant to the Requesting Party's request for an Access Terminal within six (6) months of installation of the Access Terminal, the Provisioning Party will bill the Requesting Party a nonrecurring charge equal to the actual cost of provisioning the Access Terminal.

29.3.3.11 If the Provisioning Party determines that the Requesting Party is using the UNTW pairs without reporting the activation of the pairs, the Requesting Party will be billed for the use of that pair back to the date the End User began receiving service from the Requesting Party at that location. Upon request, the Requesting Party will provide copies of its billing record to substantiate such date. If the Requesting Party fails to provide such records, then the Provisioning Party will bill the Requesting Party back to the date of the Access Terminal installation.

UNBUNDLED NETWORK ELEMENTS - Louisiana

Att: 1 Exh: B

CATEGORY	RATE ELEMENTS	Interim	Zone	BCS	USOC	RATES($) Rec	Nonrecurring First	Nonrecurring Add'l	Nonrecurring Disconnect First	Nonrecurring Disconnect Add'l	Svc Order Submitted Elec per LSR	Svc Order Submitted Manually per LSR	Incremental Charge - Manual Svc Order vs. Electronic-1st	Incremental Charge - Manual Svc Order vs. Electronic-Add'l	Incremental Charge - Manual Svc Order vs. Electronic-Disc 1st	Incremental Charge - Manual Svc Order vs. Electronic-Disc Add'l
											OSS Rates($)					
											SOMEC	SOMAN	SOMAN	SOMAN	SOMAN	SOMAN
	The "Zone" shown in the sections for stand-alone loops or loops as part of a combination refers to Geographically Deaveraged UNE Zones. To view Geographically Deaveraged UNE Zone Designations by Central Office, refer to Internet Website: http://www.inter															
UNBUNDLED EXCHANGE ACCESS LOOP																
	2-WIRE ANALOG VOICE GRADE LOOP															
	Switch-As-Is Conversion rate per UNE Loop, Single LSR, (per DS0)			UEA	URESL		24.98	3.52								
	Switch-As-Is Conversion rate per UNE Loop, Spreadsheet, (per DS0)			UEA	URESP		26.47	5.01								
	4-WIRE ANALOG VOICE GRADE LOOP															
	Switch-As-Is Conversion rate per UNE Loop, Single LSR, (per DS0)			UEA	URESL		24.98	3.52								
	Switch-As-Is Conversion rate per UNE Loop, Spreadsheet, (per DS0)			UEA	URESP		26.47	5.01								
	4-WIRE DS1 DIGITAL LOOP															
	Switch-As-Is Conversion rate per UNE Loop, Single LSR, (per DS1)			USL	URESL		24.98	3.52								
	Switch-As-Is Conversion rate per UNE Loop, Spreadsheet, (per DS1)			USL	URESP		26.47	5.01								
	4-WIRE 19.2, 56 OR 64 KBPS DIGITAL GRADE LOOP															
	Switch-As-Is Conversion rate per UNE Loop, Single LSR, (per DS0)			UDL	URESL		24.98	3.52								
	Switch-As-Is Conversion rate per UNE Loop, Spreadsheet, (per DS0)			UDL	URESP		26.47	5.01								
UNE LOOP COMMINGLING																
	2-WIRE ANALOG VOICE GRADE LOOP - COMMINGLING															
	2-Wire Analog Voice Grade Loop - Service Level 2 w/Loop or Ground Start Signaling - Zone 1		1	NTCVG	UEAL2	14.93	102.10	65.72								
	2-Wire Analog Voice Grade Loop - Service Level 2 w/Loop or Ground Start Signaling - Zone 2		2	NTCVG	UEAL2	25.35	102.10	65.72								
	2-Wire Analog Voice Grade Loop - Service Level 2 w/Loop or Ground Start Signaling - Zone 3		3	NTCVG	UEAL2	50.46	102.10	65.72								
	2-Wire Analog Voice Grade Loop - Service Level 2 w/Reverse Battery Signaling - Zone 1		1	NTCVG	UEAR2	14.93	102.10	65.72								
	2-Wire Analog Voice Grade Loop - Service Level 2 w/Reverse Battery Signaling - Zone 2		2	NTCVG	UEAR2	25.35	102.10	65.72								
	2-Wire Analog Voice Grade Loop - Service Level 2 w/Reverse Battery Signaling - Zone 3		3	NTCVG	UEAR2	50.46	102.10	65.72								
	Switch-As-Is Conversion rate per UNE Loop, Single LSR, (per DS0)			NTCVG	URESL		24.98	3.52								
	Switch-As-Is Conversion rate per UNE Loop, Spreadsheet, (per DS0)			NTCVG	URESP		26.47	5.01								
	Unbundled Loop Service Rearrangement, change in loop facility, per circuit			NTCVG	UREWO		87.59	36.30								
	Loop Tagging - Service Level 2 (SL2)			NTCVG	URETL		11.20	1.10								
	4-WIRE ANALOG VOICE GRADE LOOP															
	4-Wire Analog Voice Grade Loop - Zone 1		1	NTCVG	UEAL4	30.81	127.40	91.02								
	4-Wire Analog Voice Grade Loop - Zone 2		2	NTCVG	UEAL4	38.32	127.40	91.02								
	4-Wire Analog Voice Grade Loop - Zone 3		3	NTCVG	UEAL4	60.39	127.40	91.02								
	Switch-As-Is Conversion rate per UNE Loop, Single LSR, (per DS0)			NTCVG	URESL		24.98	3.52								
	Switch-As-Is Conversion rate per UNE Loop, Spreadsheet, (per DS0)			NTCVG	URESP		26.47	5.01								
	Unbundled Loop Service Rearrangement, change in loop facility, per circuit			NTCVG	UREWO		87.59	36.30								
	4-WIRE DS1 DIGITAL LOOP															
	4-Wire DS1 Digital Loop - Zone 1		1	NTCD1	USLXX	85.70	245.16	152.98								
	4-Wire DS1 Digital Loop - Zone 2		2	NTCD1	USLXX	194.96	245.16	152.98								

UNBUNDLED NETWORK ELEMENTS - Louisiana																	Att: 1 Exh: B
CATEGORY		RATE ELEMENTS	Interim	Zone	BCS	USOC	RATES($)					Svc Order Submitted Elec per LSR	Svc Order Submitted Manually per LSR	Incremental Charge - Manual Svc Order vs. Electronic-1st	Incremental Charge - Manual Svc Order vs. Electronic-Add'l	Incremental Charge - Manual Svc Order vs. Electronic-Disc 1st	Incremental Charge - Manual Svc Order vs. Electronic-Disc Add'l
							Rec	Nonrecurring		Nonrecurring Disconnect		OSS Rates($)					
								First	Add'l	First	Add'l	SOMEC	SOMAN	SOMAN	SOMAN	SOMAN	SOMAN
		4-Wire DS1 Digital Loop - Zone 3		3	NTCD1	USLXX	491.94	245.16	152.98								
		Switch-As-Is Conversion rate per UNE Loop, Single LSR, (per DS1)			NTCD1	URESL		24.98	3.52								
		Switch-As-Is Conversion rate per UNE Loop, Spreadsheet, (per DS1)			NTCD1	URESP		26.47	5.01								
		Unbundled Loop Service Rearrangement, change in loop facility, per circuit			NTCD1	UREWO		100.93	42.98								
	4-WIRE 19.2, 56 OR 64 KBPS DIGITAL GRADE LOOP																
		4 Wire Unbundled Digital Loop 2.4 Kbps - Zone 1		1	NTCUD	UDL2X	30.99	121.86	85.48								
		4 Wire Unbundled Digital Loop 2.4 Kbps - Zone 2		2	NTCUD	UDL2X	36.78	121.86	85.48								
		4 Wire Unbundled Digital Loop 2.4 Kbps - Zone3		3	NTCUD	UDL2X	38.92	121.86	85.48								
		4 Wire Unbundled Digital Loop 4.8 Kbps -Zone 1		1	NTCUD	UDL4X	30.99	121.86	85.48								
		4 Wire Unbundled Digital Loop 4.8 Kbps - Zone 2		2	NTCUD	UDL4X	36.78	121.86	85.48								
		4 Wire Unbundled Digital Loop 4.8 Kbps - Zone 3		3	NTCUD	UDL4X	38.92	121.86	85.48								
		4 Wire Unbundled Digital Loop 9.6 Kbps - Zone 1		1	NTCUD	UDL9X	30.99	121.86	85.48								
		5 Wire Unbundled Digital Loop 9.6 Kbps - Zone 2		2	NTCUD	UDL9X	36.78	121.86	85.48								
		6 Wire Unbundled Digital Loop 9.6 Kbps - Zone 3		3	NTCUD	UDL9X	38.92	121.86	85.48								
		4 Wire Unbundled Digital 19.2 Kbps - Zone 1		1	NTCUD	UDL19	30.99	121.86	85.48								
		4 Wire Unbundled Digital 19.2 Kbps - Zone 2		2	NTCUD	UDL19	36.78	121.86	85.48								
		4 Wire Unbundled Digital 19.2 Kbps - Zone 3		3	NTCUD	UDL19	38.92	121.86	85.48								
		4 Wire Unbundled Digital Loop 56 Kbps - Zone 1		1	NTCUD	UDL56	30.99	121.86	85.48								
		4 Wire Unbundled Digital Loop 56 Kbps - Zone 2		2	NTCUD	UDL56	36.78	121.86	85.48								
		4 Wire Unbundled Digital Loop 56 Kbps - Zone 3		3	NTCUD	UDL56	38.92	121.86	85.48								
		4 Wire Unbundled Digital Loop 64 Kbps - Zone 1		1	NTCUD	UDL64	30.99	121.86	85.48								
		4 Wire Unbundled Digital Loop 64 Kbps - Zone 2		2	NTCUD	UDL64	36.78	121.86	85.48								
		4 Wire Unbundled Digital Loop 64 Kbps - Zone 3		3	NTCUD	UDL64	38.92	121.86	85.48								
		Switch-As-Is Conversion rate per UNE Loop, Single LSR, (per DS0)			NTCUD	URESL		24.98	3.52								
		Switch-As-Is Conversion rate per UNE Loop, Spreadsheet, (per DS0)			NTCUD	URESP		26.47	5.01								
		Unbundled Loop Service Rearrangement, change in loop facility, per circuit			NTCUD	UREWO		101.97	49.67								
		Order Coordination for Specified Conversion Time (per LSR)			NTCVG, NTCUD, NTCD1	OCOSL		17.56									
UNBUNDLED DEDICATED TRANSPORT																	
	INTEROFFICE CHANNEL - DEDICATED TRANSPORT																
		Interoffice Channel - 2-Wire Voice Grade - per mile			U1TVX	1L5XX	0.013										
		Interoffice Channel - 2-Wire Voice Grade - Facility Termination			U1TVX	U1TV2	22.60	39.36	26.62								
		Interoffice Channel - 2-Wire Voice Grade Rev Bat. - per mile			U1TVX	1L5XX	0.013										
		Interoffice Channel - 2-Wire VG Rev Bat. - Facility Termination			U1TVX	U1TR2	22.60	39.36	26.62								
		Interoffice Channel - 4-Wire Voice Grade - per mile			U1TVX	1L5XX	0.013										

UNBUNDLED NETWORK ELEMENTS - Louisiana																Att: 1 Exh: B	
CATEGORY		RATE ELEMENTS	Interim	Zone	BCS	USOC	RATES($)					Svc Order Submitted Elec per LSR	Svc Order Submitted Manually per LSR	Incremental Charge - Manual Svc Order vs. Electronic-1st	Incremental Charge - Manual Svc Order vs. Electronic-Add'l	Incremental Charge - Manual Svc Order vs. Electronic-Disc 1st	Incremental Charge - Manual Svc Order vs. Electronic-Disc Add'l
							Rec	Nonrecurring		Nonrecurring Disconnect		OSS Rates($)					
								First	Add'l	First	Add'l	SOMEC	SOMAN	SOMAN	SOMAN	SOMAN	SOMAN
		Interoffice Channel - 4- Wire Voice Grade - Facility Termination			U1TVX	U1TV4	19.81	39.36	26.62								
		Interoffice Channel - 56 kbps - per mile			U1TDX	1L5XX	0.013										
		Interoffice Channel - 56 kbps - Facility Termination			U1TDX	U1TD5	15.61	39.36	26.62								
		Interoffice Channel - 64 kbps - per mile			U1TDX	1L5XX	0.013										
		Interoffice Channel - 64 kbps - Facility Termination			U1TDX	U1TD6	15.61	39.36	26.62								
		Interoffice Channel - DS1 - per mile			U1TD1	1L5XX	0.2652										
		Interoffice Channel - DS1 - Facility Termination			U1TD1	U1TF1	70.47	86.69	79.44								
		Interoffice Channel - DS3 - per mile			U1TD3	1L5XX	6.04										
		Interoffice Channel - DS3 - Facility Termination			U1TD3	U1TF3	850.45	270.69	158.05								
		Interoffice Channel - STS-1 - per mile			U1TS1	1L5XX	6.04										
		Interoffice Channel - STS-1 - Facility Termination			U1TS1	U1TFS	830.19	270.69	158.05								
	UNBUNDLED DARK FIBER																
		Dark Fiber - Interoffice Transport, Per Four Fiber Strands, Per Route Mile Or Fraction Thereof			UDF, UDFCX	1L5DF	25.28										
		Dark Fiber - Interoffice Transport, Per Four Fiber Strands, Per Route Mile Or Fraction Thereof			UDF, UDFCX	UDF14		620.60	133.88								
HIGH CAPACITY UNBUNDLED LOCAL LOOP																	
	DS-3/STS-1 UNBUNDLED LOCAL LOOP - Stand Alone																
		DS3 Unbundled Local Loop - per mile			UE3	1L5ND	10.04										
		DS3 Unbundled Local Loop - Facility Termination			UE3	UE3PX	362.34	438.46	256.30								
		STS-1Unbundled Local Loop - per mile			UDLSX	1L5ND	10.04										
		STS-1 Unbundled Local Loop - Facility Termination			UDLSX	UDLS1	374.56	438.46	256.30								
ENHANCED EXTENDED LINK (EELs)																	
	Network Elements Used in Combinations																
		2-Wire VG Loop (SL2) in Combination - Zone 1		1	UNCVX	UEAL2	14.93	94.21	45.09								
		2-Wire VG Loop (SL2) in Combination - Zone 2		2	UNCVX	UEAL2	25.35	94.21	45.09								
		2-Wire VG Loop (SL2) in Combination - Zone 3		3	UNCVX	UEAL2	50.46	94.21	45.09								
		4-Wire Analog Voice Grade Loop in Combination - Zone 1		1	UNCVX	UEAL4	30.81	94.21	45.09								
		4-Wire Analog Voice Grade Loop in Combination - Zone 2		2	UNCVX	UEAL4	38.32	94.21	45.09								
		4-Wire Analog Voice Grade Loop in Combination - Zone 3		3	UNCVX	UEAL4	60.39	94.21	45.09								
		2-Wire ISDN Loop in Combination - Zone 1		1	UNCNX	U1L2X	22.09	94.21	45.09								
		2-Wire ISDN Loop in Combination - Zone 2		2	UNCNX	U1L2X	35.28	94.21	45.09								
		2-Wire ISDN Loop in Combination - Zone 3		3	UNCNX	U1L2X	65.18	94.21	45.09								
		4-Wire 56Kbps Digital Grade Loop in Combination - Zone 1		1	UNCDX	UDL56	30.99	94.21	45.09								
		4-Wire 56Kbps Digital Grade Loop in Combination - Zone 2		2	UNCDX	UDL56	36.78	94.21	45.09								
		4-Wire 56Kbps Digital Grade Loop in Combination - Zone 3		3	UNCDX	UDL56	38.92	94.21	45.09								
		4-Wire 64Kbps Digital Grade Loop in Combination - Zone 1		1	UNCDX	UDL64	30.99	94.21	45.09								

CATEGORY	RATE ELEMENTS	Interim	Zone	BCS	USOC	RATES($)					Svc Order Submitted Elec per LSR	Svc Order Submitted Manually per LSR	Incremental Charge - Manual Svc Order vs. Electronic-1st	Incremental Charge - Manual Svc Order vs. Electronic-Add'l	Incremental Charge - Manual Svc Order vs. Electronic-Disc 1st	Incremental Charge - Manual Svc Order vs. Electronic-Disc Add'l
						Rec	Nonrecurring		Nonrecurring Disconnect		OSS Rates($)					
							First	Add'l	First	Add'l	SOMEC	SOMAN	SOMAN	SOMAN	SOMAN	SOMAN
	4-Wire 64Kbps Digital Grade Loop in Combination - Zone 2		2	UNCDX	UDL64	36.78	94.21	45.09								
	4-Wire 64Kbps Digital Grade Loop in Combination - Zone 3		3	UNCDX	UDL64	38.92	94.21	45.09								
	4-Wire DS1 Digital Loop in Combination - Zone 1		1	UNC1X	USLXX	85.70	169.22	100.89								
	4-Wire DS1 Digital Loop in Combination - Zone 2		2	UNC1X	USLXX	194.96	169.22	100.89								
	4-Wire DS1 Digital Loop in Combination - Zone 3		3	UNC1X	USLXX	491.94	169.22	100.89								
	DS3 Local Loop in combination - per mile			UNC3X	1L5ND	10.04										
	DS3 Local Loop in combination - Facility Termination			UNC3X	UE3PX	362.34	188.45	125.51								
	STS-1 Local Loop in combination - per mile			UNCSX	1L5ND	10.04										
	STS-1 Local Loop in combination - Facility Termination			UNCSX	UDLS1	374.56	188.45	125.51								
	Interoffice Channel in combination - 2-wire VG - per mile			UNCVX	1L5XX	0.013										
	Interoffice Channel in combination - 2-wire VG - Facility Termination			UNCVX	U1TV2	22.60	72.60	41.75								
	Interoffice Channel in combination - 4-wire VG - per mile			UNCVX	1L5XX	0.013										
	Interoffice Channel in combination - 4-wire VG - Facility Termination			UNCVX	U1TV4	19.81	72.60	41.75								
	Interoffice Channel in combination - 4-wire 56 kbps - per mile			UNCDX	1L5XX	0.013										
	Interoffice Channel in combination - 4-wire 56 kbps - Facility Termination			UNCDX	U1TD5	15.61	72.60	41.75								
	Interoffice Channel in combination - 4-wire 64 kbps - per mile			UNCDX	1L5XX	0.013										
	Interoffice Channel in combination - 4-wire 64 kbps - Facility Termination			UNCDX	U1TD6	15.61	72.60	41.75								
	Interoffice Channel in combination - DS1 - per mile			UNC1X	1L5XX	0.2652										
	Interoffice Channel in combination - DS1 Facility Termination			UNC1X	U1TF1	70.47	143.58	103.88								
	Interoffice Channel in combination - DS3 - per mile			UNC3X	1L5XX	6.04										
	Interoffice Channel in combination - DS3 - Facility Termination			UNC3X	U1TF3	850.45	296.68	121.16								
	Interoffice Channel in combination - STS-1 - per mile			UNCSX	1L5XX	6.04										
	Interoffice Channel in combination - STS-1 Facility Termination			UNCSX	U1TFS	830.19	296.68	121.16								
ADDITIONAL NETWORK ELEMENTS																
	Optional Features & Functions:															
	Clear Channel Capability Extended Frame Option - per DS1	I		U1TD1, ULDD1,UNC1X	CCOEF		0.00	0.00	0.00	0.00						
	Clear Channel Capability Super FrameOption - per DS1	I		U1TD1, ULDD1,UNC1X	CCOSF		0.00	0.00	0.00	0.00						
	Clear Channel Capability (SF/ESF) Option - Subsequent Activity - per DS1	I		ULDD1, U1TD1, UNC1X, USL	NRCCC		184.65	23.79	1.97	0.77						
	C-bit Parity Option - Subsequent Activity - per DS3	i		U1TD3, ULDD3, UE3, UNC3X	NRCC3		218.78	7.66	0.7263	0.00						
	DS1/DS0 Channel System			UNC1X	MQ1	105.09	59.97	12.96								
	DS3/DS1Channel System			UNC3X, UNCSX	MQ3	201.48	107.05	48.07								
	Voice Grade COCI in combination			UNCVX	1D1VG	0.6497	5.91	4.26								
	Voice Grade COCI - for Stand Alone Local Loop			UEA	1D1VG	0.6497	5.91	4.26								

UNBUNDLED NETWORK ELEMENTS - Louisiana

Att: 1 Exh: B

CATEGORY	RATE ELEMENTS	Interim	Zone	BCS	USOC	RATES($) Rec	Nonrecurring First	Nonrecurring Add'l	Nonrecurring Disconnect First	Nonrecurring Disconnect Add'l	Svc Order Submitted Elec per LSR	Svc Order Submitted Manually per LSR	Incremental Charge - Manual Svc Order vs. Electronic-1st	Incremental Charge - Manual Svc Order vs. Electronic-Add'l	Incremental Charge - Manual Svc Order vs. Electronic-Disc 1st	Incremental Charge - Manual Svc Order vs. Electronic-Disc Add'l
											OSS Rates($)					
											SOMEC	SOMAN	SOMAN	SOMAN	SOMAN	SOMAN
	Voice Grade COCI - for connection to a channelized DS1 Local Channel in the same SWC as collocation			U1TUC	1D1VG	0.6497	5.91	4.26								
	OCU-DP COCI (2.4-64kbs) in combination			UNCDX	1D1DD	1.38	5.91	4.26								
	OCU-DP COCI (2.4-64kbs) - for Stand Alone Local Loop			UDL	1D1DD	1.38	5.91	4.26								
	OCU-DP COCI (2.4-64kbs) - for connection to a channelized DS1 Local Channel in the same SWC as collocation			U1TUD	1D1DD	1.38	5.91	4.26								
	2-wire ISDN COCI (BRITE) in combination			UNCNX	UC1CA	2.96	6.39	4.58								
	2-wire ISDN COCI (BRITE) - for a Local Loop			UDN	UC1CA	2.96	6.39	4.58								
	2-wire ISDN COCI (BRITE) - for connection to a channelized DS1 Local Channel in the same SWC as collocation			U1TUB	UC1CA	2.96	6.39	4.58								
	DS1 COCI in combination			UNC1X	UC1D1	11.78	5.91	4.26								
	DS1 COCI - for Stand Alone Local Channel			ULDD1	UC1D1	11.78	5.91	4.26								
	DS1 COCI - for Stand Alone Interoffice Channel			U1TD1	UC1D1	11.78	5.91	4.26								
	DS1 COCI - for Stand Alone Local Loop			USL	UC1D1	11.78	5.91	4.26								
	DS1 COCI - for connection to a channelized DS1 Local Channel in the same SWC as collocation			U1TUA	UC1D1	11.78	5.91	4.26								
	Wholesale - UNE, Switch-As-Is Conversion Charge			UNCVX, UNCDX, UNC1X, UNC3X,	UNCCC		5.43	5.43								
	Unbundled Misc Rate Element, SNE SAI, Single Network Element - Switch As Is Non-recurring Charge, per circuit (LSR)	I		U1TVX, U1TDX, U1TD1, U1TD3,	URESL		36.83	16.12								
	Unbundled Misc Rate Element, SNE SAI, Single Network Element - Switch As Is Non-recurring Charge, incremental charge per circuit	i		U1TVX, U1TDX, U1TD1, U1TD3,	URESP		1.49	1.49								
Access to DCS - Customer Reconfiguration (FlexServ)																
	Customer Reconfiguration Establishment						1.43									
	DS1 DCS Termination with DS0 Switching					19.58	24.81	19.09								
	DS1 DCS Termination with DS1 Switching					10.95	17.93	12.22								
	DS3 DCS Termination with DS1 Switching					149.41	24.81	19.09								
Node (SynchroNet)																
	Node per month			UNCDX	UNCNT	15.43										
Service Rearrangements																
	NRC - Change in Facility Assignment per circuit Service Rearrangement	I		U1TVX, U1TDX, UEA, UDL, U1TUC, U1TUD, U1TUB, ULDVX, ULDDX, UNCVX, UNCDX, UNC1X	URETD		100.93	42.98								
	NRC - Change in Facility Assignment per circuit Project Management (added to CFA per circuit if project managed)	I		U1TVX, U1TDX, UEA, UDL, U1TUC, U1TUD, U1TUB, ULDVX, ULDDX, UNCVX, UNCDX, UNC1X	URETB		3.67	3.67								
	NRC - Order Coordination Specific Time - Dedicated Transport	I		UNC1X, UNC3X	OCOSR		18.85	18.85								
COMMINGLED																
	Commingling Authorization			UNCVX, UNCDX, UNC1X, UNC3X, UNCSX, U1TD1, U1TD3, U1TS1, UE3, UDLSX, U1TVX, U1TDX, U1TUB, ULDVX, ULDD1, ULDD3, ULDS1	CMGAU	0.00	0.00	0.00								
Commingled (UNE part of single bandwidth circuit)																
	Commingled VG COCI			XDV2X, NTCVG	1D1VG	0.6497	5.91	4.26								
	Commingled Digital COCI			XDV6X, NTCUD	1D1DD	1.38	5.91	4.26								
	Commingled ISDN COCI			XDD4X	UC1CA	2.96	6.39	4.58								

UNBUNDLED NETWORK ELEMENTS - Louisiana

Att: 1 Exh: B

CATEGORY	RATE ELEMENTS	Interim	Zone	BCS	USOC	RATES($)					Svc Order Submitted Elec per LSR	Svc Order Submitted Manually per LSR	Incremental Charge - Manual Svc Order vs. Electronic-1st	Incremental Charge - Manual Svc Order vs. Electronic-Add'l	Incremental Charge - Manual Svc Order vs. Electronic-Disc 1st	Incremental Charge - Manual Svc Order vs. Electronic-Disc Add'l
						Rec	Nonrecurring		Nonrecurring Disconnect		OSS Rates($)					
							First	Add'l	First	Add'l	SOMEC	SOMAN	SOMAN	SOMAN	SOMAN	SOMAN
	Commingled 2-wire VG Interoffice Channel			XDV2X	U1TV2	22.60	72.60	41.75								
	Commingled 4-wire VG Interoffice Channel			XDV6X	U1TV4	19.81	72.60	41.75								
	Commingled 56kbps Interoffice Channel			XDD4X	U1TD5	15.61	72.60	41.75								
	Commingled 64kbps Interoffice Channel			XDD4X	U1TD6	15.61	72.60	41.75								
	Commingled VG/DS0 Interoffice Channel Mileage			XDV2X, XDV6X,	1L5XX	0.013										
	Commingled 2-wire Local Loop Zone 1		1	XDV2X	UEAL2	14.93	94.21	45.09								
	Commingled 2-wire Local Loop Zone 2		2	XDV2X	UEAL2	25.35	94.21	45.09								
	Commingled 2-wire Local Loop Zone 3		3	XDV2X	UEAL2	50.46	94.21	45.09								
	Commingled 4-wire Local Loop Zone 1		1	XDV6X	UEAL4	30.81	94.21	45.09								
	Commingled 4-wire Local Loop Zone 2		2	XDV6X	UEAL4	38.32	94.21	45.09								
	Commingled 4-wire Local Loop Zone 3		3	XDV6X	UEAL4	60.39	94.21	45.09								
	Commingled 56kbps Local Loop Zone 1		1	XDD4X	UDL56	30.99	94.21	45.09								
	Commingled 56kbps Local Loop Zone 2		2	XDD4X	UDL56	36.78	94.21	45.09								
	Commingled 56kbps Local Loop Zone 3		3	XDD4X	UDL56	38.92	94.21	45.09								
	Commingled 64kbps Local Loop Zone 1		1	XDD4X	UDL64	30.99	94.21	45.09								
	Commingled 64kbps Local Loop Zone 2		2	XDD4X	UDL64	36.78	94.21	45.09								
	Commingled 64kbps Local Loop Zone 3		3	XDD4X	UDL64	38.92	94.21	45.09								
	Commingled ISDN Local Loop Zone 1		1	XDD4X	U1L2X	22.09	94.21	45.09								
	Commingled ISDN Local Loop Zone 2		2	XDD4X	U1L2X	35.28	94.21	45.09								
	Commingled ISDN Local Loop Zone 3		3	XDD4X	U1L2X	65.18	94.21	45.09								
	Commingled DS1 COCI			XDH1X, NTCD1	UC1D1	11.78	5.91	4.26								
	Commingled DS1 Interoffice Channel			XDH1X	U1TF1	70.47	143.58	103.88								
	Commingled DS1 Interoffice Channel Mileage			XDH1X	1L5XX	0.2652										
	Commingled DS1/DS0 Channel System			XDH1X	MQ1	105.09	59.97	12.96								
	Commingled DS1 Local Loop Zone 1		1	XDH1X	USLXX	85.70	169.22	100.89								
	Commingled DS1 Local Loop Zone 2		2	XDH1X	USLXX	194.96	169.22	100.89								
	Commingled DS1 Local Loop Zone 3		3	XDH1X	USLXX	491.94	169.22	100.89								
	Commingled DS3 Local Loop			HFQC6	UE3PX	362.34	188.45	125.51								
	Commingled DS3/STS-1 Local Loop Mileage			HFQC6, HFRST	1L5ND	10.04										
	Commingled STS-1 Local Loop			HFRST	UDLS1	374.56	188.45	125.51								
	Commingled DS3/DS1 Channel System			HFQC6	MQ3	201.48	107.05	48.07								
	Commingled DS3 Interoffice Channel			HFQC6	U1TF3	850.45	296.68	121.16								
	Commingled DS3 Interoffice Channel Mileage			HFQC6	1L5XX	6.04										
	Commingled STS-1Interoffice Channel			HFRST	U1TFS	830.19	296.68	121.16								
	Commingled STS-1Interoffice Channel Mileage			HFRST	1L5XX	6.04										
	Commingled Dark Fiber - Interoffice Transport, Per Four Fiber Strands, Per Route Mile Or Fraction Thereof			HEQDL	1L5DF	25.28										
	Commingled Dark Fiber - Interoffice Transport, Per Four Fiber Strands, Per Route Mile Or Fraction Thereof			HEQDL	UDF14		620.60	133.88								
	UNE to Commingled Conversion Tracking			XDH1X, HFQC6	CMGUN	0.00	0.00	0.00	0.00	0.00						
	SPA to Commingled Conversion Tracking			XDH1X, HFQC6	CMGSP	0.00	0.00	0.00	0.00	0.00						

Note: Rates displaying an "I" in interim column are interim as a result of a Commission order.

UNBUNDLED NETWORK ELEMENTS - Louisiana														Att: 1 Exh C			
CATEGORY		RATE ELEMENTS	Interim	Zone	BCS	USOC	RATES($)					Svc Order Submitted Elec per LSR	Svc Order Submitted Manually per LSR	Incremental Charge - Manual Svc Order vs. Electronic-1st	Incremental Charge - Manual Svc Order vs. Electronic-Add'l	Incremental Charge - Manual Svc Order vs. Electronic-Disc 1st	Incremental Charge - Manual Svc Order vs. Electronic-Disc Add'l
								Nonrecurring		Nonrecurring Disconr		OSS Rates($)					
							Rec	First	Add'l	First	Add'l	SOMEC	SOMAN	SOMAN	SOMAN	SOMAN	SOMAN
911 PBX LOCATE																	
	911 PBX LOCATE DATABASE CAPABILITY																
		Service Establishment per CLEC per End User Account			9PBDC	9PBEU		1,819.00									
		Changes to TN Range or Customer Profile			9PBDC	9PBTN		181.99									
		Per Telephone Number (Monthly)			9PBDC	9PBMM	0.07										
		Change Company (Service Provider) ID			9PBDC	9PBPC		534.22									
		PBX Locate Service Support per CLEC (Monthlt)			9PBDC	9PBMR	178.58										
		Service Order Charge			9PBDC	9PBSC		15.20									
	911 PBX LOCATE TRANSPORT COMPONENT																
	See Att 3																

Amendment to the Agreement
Between
DPI-Teleconnect, LLC
and
BellSouth Telecommunications, Inc.
Dated 4/19/2003

Pursuant to this Amendment, (the "Amendment"), DPI-Teleconnect, LLC (DPI-Teleconnect), and BellSouth Telecommunications, Inc. (BellSouth), hereinafter referred to collectively as the "Parties", hereby agree to amend that certain Interconnection Agreement between the Parties dated 4/19/2003 ("Agreement").

WHEREAS, BellSouth and DPI-Teleconnect have entered into good faith negotiations pursuant to the Act to renegotiate an interconnection agreement (New Agreement) to replace the existing Agreement between the Parties, which expired on 4/18/2006; and

WHEREAS, the Parties desire to extend the term of the Agreement; and

WHEREAS, on March 2, 2006, the Georgia Public Service Commission (Commission) issued its Order in Docket No. 19341-U(Change of Law Order), Proceeding to Consider Amendments to Interconnection Agreements Between BellSouth Telecommunications, Inc. and certified Competitive Local Exchange Carriers (CLECs) Due to Changes of Law; and

WHEREAS, on March 10, 2006, the Commission issued its Order Setting Rates Under Section 271 in Docket No. 19341-U (271 Order); and

WHEREAS, on March 24, 2006, Commission issued its Order on Reconsideration of the March 10, 2006 Order Setting Rates Under Section 271 in Docket No. 19341-U(271 Reconsideration Order); and

WHEREAS, the Parties are obligated to amend the Agreement to bring it in compliance with the Commission's Change of Law Order, 271 Order and 271 Reconsideration Order (collectively, "Orders"); and

NOW, THEREFORE, in consideration of the mutual provisions contained herein and other good and valuable consideration, the receipt and sufficiency of which are hereby acknowledged, the Parties hereby covenant and agree as follows:

1. The Parties hereby agree to extend the term of the Agreement by ninety (90) days following the date of the last signature of this Amendment. Other than the modification of the expiration date as described in this Amendment, all provisions in Section 2 of the General Terms and Conditions of the Agreement relating to the term and termination of the Agreement remain in full force and effect.

2. The Parties hereby agree to incorporate into the Agreement the contract provisions set forth in Exhibit A hereto, and such contract provisions shall apply to services provided in the State of Georgia only.

3. The Parties hereby agree to incorporate into the Agreement the rates set forth in Exhibit B and C hereto, and such rates shall apply to services provided in the State of Georgia only.

4. To the extent that such contract provisions or rates as set forth in Exhibits A, B, and C hereto conflict with any other rates, terms and conditions in the Agreement, the contract provisions and rates in Exhibits A, B, and C shall prevail in the State of Georgia.

5. Further, to the extent that defined terms in this Amendment differ from defined terms in the Agreement, such defined terms in the Agreement shall be deemed to have the same meaning as the alternative defined terms in this Amendment to the extent necessary to give full effect to this Amendment consistent with the Georgia Public Service Commission's Orders.

6. This Amendment shall be shall be deemed effective on March 11, 2006 (”Effective Date”).

7. All of the other provisions of the Agreement shall remain in full force and effect.

8. Either or both of the Parties are authorized to submit this Amendment to the respective state regulatory authorities for approval subject to Section 252(e) of the Federal Telecommunications Act of 1996.

IN WITNESS WHEREOF, the Parties have executed this Amendment the day and year written below.

BellSouth Telecommunications, Inc.	**DPI-Teleconnect, LLC**
By: Kristen E Shore	By: David B. Lawant
Name: Kristen Shore	Name: DAVID B. DELWART
Title: Director	Title: PRESIDENT + CEO
Date: 11/16/06	Date: 11/14/06

<u>Issue 2</u> – What is the appropriate language to implement the FCC's transition plan for: (1) switching; (2) high-capacity loops; and (3) dedicated transport as detailed in the FCC's TRRO, issued February 4, 2005?

1. <u>Loops</u>

1.1 <u>4-wire Unbundled DS1 Digital Loop</u>

This is a designed 4-wire Loop that is provisioned according to industry standards for DS1 or Primary Rate ISDN services and will come standard with a test point, OC, and a DLR. A DS1 Loop may be provisioned over a variety of loop transmission technologies including copper, HDSL-based technology or fiber optic transport systems. It will include a 4-wire DS1 Network Interface at the End User's location. For purposes of this Agreement, including the transition of DS1 and DS3 Loops described in Section 1.4 below, DS1 Loops include 2-wire and 4-wire copper Loops capable of providing high-bit digital subscriber line services, such as 2-wire and 4-wire HDSL Compatible Loops.

1.2 <u>2-wire or 4-wire HDSL-Compatible Loop</u>

This is a designed Loop that meets Carrier Serving Area (CSA) specifications, may be up to 12,000 feet long and may have up to 2,500 feet of bridged tap (inclusive of Loop length). It may be a 2-wire or 4-wire circuit and will come standard with a test point, OC, and a DLR.

1.3 <u>DS3 Loop.</u>

DS3 Loop is a two-point digital transmission path which provides for simultaneous two-way transmission of serial, bipolar, return-to-zero isochronous digital electrical signals at a transmission rate of forty-four point seven thirty-six (44.736) megabits per second (Mbps) that is dedicated to the use of the ordering CLEC in its provisioning of local exchange and associated exchange access services. It may provide transport for twenty-eight (28) DS1 channels, each of which provides the digital equivalent of twenty-four (24) analog voice grade channels. The interface to unbundled dedicated DS3 transport is a metallic-based electrical interface.

1.4 <u>Transition for DS1 and DS3 Loops</u>

1.4.1 For purposes of this Section 1, the Transition Period for the Embedded Base of DS1 and DS3 Loops and for the Excess DS1 and DS3 Loops (defined in 1.4.3) is the twelve (12) month period beginning March 11, 2005 and ending March 10, 2006.

1.4.2 For purposes of this Section 1, Embedded Base means DS1 and DS3 Loops that were in service for DPI-Teleconnect as of March 11, 2005 in those wire centers that, as of such date, met the criteria set forth in

Sections 1.4.6.1 or 1.4.6.2 below. Subsequent disconnects or loss of End Users shall be removed from the Embedded Base.

1.4.3 Excess DS1 and DS3 Loops are those DPI-Teleconnect DS1 and DS3 Loops in service as of March 11, 2005, in excess of the caps set forth in Section 1.4.4 below, respectively. Subsequent disconnects or loss of End Users shall be removed from Excess DS1 and DS3 Loops.

1.4.4 BellSouth shall not provide more than ten (10) unbundled DS1 Loops to DPI-Teleconnect at any single building in which DS1 Loops are available as unbundled loops. DPI-Teleconnect may obtain a maximum of a single Unbundled DS3 loop to any single building in which DS3 Loops are available as Unbundled Loops.

1.4.5 For purposes of this Section 1, a Business Line is defined in 47 C.F.R. § 51.5.

1.4.6 Notwithstanding anything to the contrary in this Agreement, and except as set forth in Section 10 below, BellSouth shall make available DS1 and DS3 Loops as described in this Section 1.4 only for DPI-Teleconnect's Embedded Base during the Transition Period:

1.4.6.1 DS1 Loops at any location within the service area of a wire center containing 60,000 or more Business Lines and four (4) or more fiber-based collocators.

1.4.6.2 DS3 Loops at any location within the service area of a wire center containing 38,000 or more Business Lines and four (4) or more fiber-based collocators.

1.4.7 A list of wire centers meeting the criteria set forth in Sections 1.4.6.1 and 1.4.6.2 above as ordered by the Georgia Public Service Commission in Docket No. 19341-U (Initial Wire Center List) is attached to BellSouth's Carrier Notification Letter SN91086068, dated March 30, 2006, which is available on BellSouth's Interconnection Services Web site.

1.4.8 Transition Period Pricing. From March 11, 2005, through the completion of the Transition Period, BellSouth shall charge a rate for DPI-Teleconnect's Embedded Base and DPI-Teleconnect's Excess DS1 and DS3 Loops equal to 115% of the rates set forth in the Amendment to the Agreement to implement the Georgia Public Service Commission's Letter Order dated March 2, 2006 in docket 14361-U.

1.4.9 The Transition Period shall apply only to (1) DPI-Teleconnect's Embedded Base and (2) DPI-Teleconnect's Excess DS1 and DS3 Loops. DPI-Teleconnect shall not add new DS1 or DS3 loops as described in this Section 1.4 pursuant to this Agreement, except pursuant to the self-certification process as set forth in Section 5 of this Attachment and as set forth in Section 10 below.

1.4.10 Once a wire center meets or exceeds both of the thresholds set forth in Section 1.4.6.1 above, no future DS1 Loop unbundling will be required in that wire center.

1.4.11 Once a wire center meets or exceeds both of the thresholds set forth in Section 1.4.6.2 above, no future DS3 Loop unbundling will be required in that wire center.

1.4.12 No later than March 11, 2006, or some other mutually agreed upon date, DPI-Teleconnect shall submit spreadsheet(s) identifying all of the Embedded Base of circuits and Excess DS1 and DS3 Loops to be either disconnected or converted to other BellSouth services pursuant to Section 15.1 below. The Parties shall negotiate a project schedule for the Conversion of the Embedded Base and Excess DS1 and DS3 Loops. In the case of Conversion, the applicable switch as is charge will apply. In the case of disconnection, the applicable disconnect charges set forth in this Agreement shall apply.

1.4.13 If DPI-Teleconnect fails to submit the spreadsheet(s) specified in Section 1.4.12 above for all of its Embedded Base and Excess DS1 and DS3 Loops by March 11, 2006 or some other mutually agreed upon date, BellSouth will identify DPI-Teleconnect's remaining Embedded Base and Excess DS1 and DS3 Loops, if any, and will transition such circuits to the 271 equivalent BellSouth service(s) as set forth in Section 26 below, effective March 11, 2006. Those circuits identified and transitioned by BellSouth pursuant to this Section 1.4.13 shall be 115% of the switch-as-is rates set forth in the amendment incorporating into this Agreement the Georgia Public Service Commission's Letter Order dated March 2, 2006 in docket 14361-U.

1.4.14 For Embedded Base circuits and Excess DS1 and DS3 Loops in place after March 11, 2006, the applicable recurring 271 charge shall apply to each circuit as of March 11, 2006.

2. <u>Dark Fiber Loop</u>

2.1 Dark Fiber Loop is an unused optical transmission facility, without attached signal regeneration, multiplexing, aggregation or other electronics, from the demarcation point at an End User's premises to the End User's serving wire center. Dark Fiber Loops may be strands of optical fiber existing in aerial or underground structure. BellSouth will not provide line terminating elements, regeneration or other electronics necessary for DPI-Teleconnect to utilize Dark Fiber Loops.

2.2 <u>Transition for Dark Fiber Loop</u>

2.2.1 For purposes of this Section 2, the Transition Period for Dark Fiber Loops is the eighteen (18) month period beginning March 11, 2005 and ending September 10, 2006.

2.2.2 For purposes of this Section 2, Embedded Base means Dark Fiber Loops that were in service for DPI-Teleconnect as of March 11, 2005.

Subsequent disconnects or loss of End Users shall be removed from the Embedded Base.

2.2.3 During the Transition Period only, BellSouth shall make available for the Embedded Base Dark Fiber Loops for DPI-Teleconnect at the terms and conditions set forth in this Attachment.

2.2.4 Transition Period Pricing. From March 11, 2005, through the completion of the Transition Period, BellSouth shall charge a rate for DPI-Teleconnect's Embedded Base of Dark Fiber Loops equal to 115% of the rates set forth in the Parties' Amendment to the Agreement to implement the Georgia Public Service Commission's Letter Order dated March 2, 2006 in docket 14361-U.

2.2.5 The Transition Period shall apply only to DPI-Teleconnect's Embedded Base and DPI-Teleconnect shall not add new Dark Fiber Loops pursuant to this Agreement.

2.2.6 Effective September 11, 2006, Dark Fiber Loops will no longer be made available pursuant to this Agreement.

2.2.7 No later than June 10, 2006 DPI-Teleconnect shall submit spreadsheet(s) identifying all of the Embedded Base of circuits to be either disconnected or converted to other BellSouth services as Conversions pursuant to Section 15.1 below. The Parties shall negotiate a project schedule for the Conversion of the Embedded Base. In the case of disconnection, the applicable disconnect charges set forth in this Agreement shall apply.

2.2.8 If DPI-Teleconnect fails to submit the spreadsheet(s) specified in Section 2.2.7 above for all of its Embedded Base prior to June 10, 2006, BellSouth will identify DPI-Teleconnect's remaining Embedded Base, if any, and will transition such circuits to the equivalent tariffed BellSouth service(s) effective September 10, 2006. Those circuits identified and transitioned by BellSouth pursuant to this Section 2.2.8 shall be subject to 115% of the applicable switch-as-is rates set forth in the Parties' Amendment to the Agreement to implement the Georgia Public Service Commission's Letter Order dated March 2, 2006 in Docket No.14361-U.

2.2.9 For Embedded Base circuits in place after September 10, 2006, the applicable tariff charge shall apply to each circuit as of September 10, 2006.

3. Dedicated Transport and Dark Fiber Transport

3.1 **Dedicated Transport.** Dedicated Transport is defined as BellSouth's transmission facilities between wire centers or switches owned by BellSouth, or between wire centers or switches owned by BellSouth and switches owned by DPI-Teleconnect, including but not limited to DS1, DS3 and OCn level services, as well as dark fiber, dedicated to DPI-Teleconnect. BellSouth shall not be required to provide access to OCn

level Dedicated Transport under any circumstances pursuant to this Agreement. In addition, except as set forth in Section 3.2 below, BellSouth shall not be required to provide to DPI-Teleconnect unbundled access to interoffice transmission facilities that do not connect a pair of wire centers or switches owned by BellSouth ("Entrance Facilities").

3.2 **Transition for DS1 and DS3 Dedicated Transport Including DS1 and DS3 Entrance Facilities**

3.2.1 For purposes of this Section 3.2, the Transition Period for the Embedded Base of DS1 and DS3 Dedicated Transport, Embedded Base Entrance Facilities and for Excess DS1 and DS3 Dedicated Transport, is the twelve (12) month period beginning March 11, 2005 and ending March 10, 2006.

3.2.2 For purposes of this Section 3.2, Embedded Base means DS1 and DS3 Dedicated Transport that were in service for DPI-Teleconnect as of March 11, 2005 in those wire centers that, as of such date, met the criteria set forth in Sections 3.2.7.1 or 3.2.7.2 below. Subsequent disconnects or loss of End Users shall be removed from the Embedded Base.

3.2.3 For purposes of this Section 3.2, Embedded Base Entrance Facilities means Entrance Facilities that were in service for DPI-Teleconnect as of March 11, 2005. Subsequent disconnects or loss of customers shall be removed from the Embedded Base.

3.2.4 DPI-Teleconnect may obtain a maximum of twelve (12) unbundled DS3 Dedicated Transport circuits on each route where DS3 Dedicated Transport is available as a Network Element, and a maximum of ten (10) unbundled DS1 Dedicated Transport circuits on each Route where there is no 251(c)(3) unbundling obligation for DS3 Dedicated Transport but for which impairment exists for DS1 Dedicated Transport.

3.2.5 For purposes of this Section 3.2, Excess DS1 and DS3 Dedicated Transport means those DPI-Teleconnect DS1 and DS3 Dedicated Transport facilities in service as of March 11, 2005, in excess of the caps set forth in Section 3.2.4 above. Subsequent disconnects and loss of End Users shall be removed from Excess DS1 and DS3 Loops.

3.2.6 For purposes of this Section 3.2, a Business Line is as defined in 47 C.F.R. § 51.5.

3.2.7 Notwithstanding anything to the contrary in this Agreement, BellSouth shall make available Dedicated Transport as described in this Section 3.2 only for DPI-Teleconnect's Embedded Base during the Transition Period:

3.2.7.1 DS1 Dedicated Transport where both wire centers at the end points of the route contain 38,000 or more Business Lines or four (4) or more fiber-based collocators.

3.2.7.2 DS3 Dedicated Transport where both wire centers at the end points of the route contain 24,000 or more Business Lines or three (3) or more fiber-based collocators.

3.2.7.3 A list of wire centers meeting the criteria set forth in Sections 3.2.7.1 or 3.2.7.2 above as ordered by the Georgia Public Service Commission in Docket No. 19341-U(Initial Wire Center List), is attached to BellSouth's Carrier Notification Letter SN91086068, dated March 30, 2006, which is available on BellSouth's Interconnection Services Web site.

3.2.8 Notwithstanding anything to the contrary in this Agreement, BellSouth shall make available Entrance Facilities only for <DPI-Teleconnect's Embedded Base Entrance Facilities and only during the Transition Period.

3.2.9 Transition Period Pricing. From March 11, 2005, through the completion of the Transition Period, BellSouth shall charge a rate for DPI-Teleconnect's Embedded Base of DS1 and DS3 Dedicated Transport and for DPI-Teleconnect's Excess DS1 and DS3 Dedicated Transport, as described in this Section 3.2, equal to 115% of the rates set forth in the Parties' Amendment to the Agreement to implement the Georgia Public Service Commission's Letter Order dated March 2, 2006 in docket 14361.

3.2.9.4 From March 11, 2005, through the completion of the Transition Period, BellSouth shall charge a rate for DPI-Teleconnect's Embedded Base Entrance Facilities as set forth in the Georgia Public Service Commission's Letter Order dated March 2, 2006 in docket 14361-U.

3.2.10 The Transition Period shall apply only to (1) DPI-Teleconnect's Embedded Base and Embedded Base Entrance Facilities; and (2) DPI-Teleconnect's Excess DS1 and DS3 Dedicated Transport. DPI-Teleconnect shall not add new Entrance Facilities pursuant to this Agreement. Further, DPI-Teleconnect shall not add new DS1 or DS3 Dedicated Transport as described in this Section 3.2 pursuant to this Agreement, except pursuant to the self-certification process as set forth in Section 5 below of and as set forth in Section 11 below.

3.2.11 Once a wire center meets or exceeds either of the thresholds set forth in this Section 3.2.7.1 above, no future DS1 Dedicated Transport unbundling will be required in that wire center.

3.2.12 Once a wire center meets or exceeds either of the thresholds set forth in Section 3.2.7.2 above, no future DS3 Dedicated Transport will be required in that wire center**.**

3.2.13 No later than March 11, 2006 or some other mutually agreed upon date DPI-Teleconnect shall submit spreadsheet(s) identifying all of the Embedded Base of circuits, Embedded Base Entrance Facilities, and Excess DS1 and DS3 Dedicated Transport to be either disconnected or converted to other BellSouth services pursuant to Section 15.1 below. The Parties shall negotiate a project schedule for the Conversion of the Embedded Base, Embedded Base Entrance Facilities and Excess DS1 and DS3 Dedicated Transport. In the case of disconnection, the applicable disconnect charges set forth in this Agreement shall apply.

3.2.14 If DPI-Teleconnect fails to submit the spreadsheet(s) specified in Section 3.2.13 above for all of its Embedded Base, and Excess DS1 and DS3 Dedicated Transport by March 11, 2006 or some other mutually agreed upon date, BellSouth will identify DPI-Teleconnect's remaining Embedded Base and Excess DS1 and DS3 Dedicated Transport, if any, and will transition such circuits to BellSouth's 271 equivalent service as set forth in Section 26 below effective March 11, 2006. For those circuits identified and transitioned by BellSouth pursuant to this Section 3.2.14, BellSouth shall charge a rate equal to 115% of the applicable nonrecurring switch-as-is rates set forth in the Georgia Public Service Commission's Letter Order dated March 2, 2006 in docket 14361-U.

3.2.15 For Embedded Base and Excess DS1 and DS3 Dedicated Transport in place after March 11, 2006, the applicable 271 rate as set forth in Exhibit B shall apply as of March 11, 2006.

3.2.16 If DPI-Teleconnect fails to submit the spreadsheet(s) specified in Section 5.2.13 above for all of its Embedded Base Entrance Facilities by March 11, 2006 or some other mutually agreed upon date, BellSouth will identify DPI-Teleconnect's remaining Embedded Base Entrance Facilities, if any, and will transition such circuits to the equivalent tariffed BellSouth service(s) effective March 11, 2006. Those circuits identified and transitioned by BellSouth pursuant to this Section 3.2.16 shall be subject to 115% of the switch-as-is rate set forth in the Georgia Public Service Commission's Letter Order dated March 2, 2006 in docket 14361-U.

3.2.17 For Embedded Base Entrance Facilities in place after March 11, 2006, the applicable recurring tariff charges shall apply as of March 11, 2006.

4. **Dark Fiber Transport.** Dark Fiber Transport is defined as Dedicated Transport that consists of unactivated optical interoffice transmission facilities without attached signal regeneration, multiplexing, aggregation or other electronics. Except as set forth in Section 4.1 below, BellSouth shall not be required to provide access to Dark Fiber Transport Entrance Facilities pursuant to this Agreement.

4.1 **Transition for Dark Fiber Transport and Dark Fiber Transport Entrance Facilities**

4.1.1 For purposes of this Section 4, the Transition Period for the Embedded Base of Dark Fiber Transport is the eighteen (18) month period beginning March 11, 2005 and ending September 10, 2006.

4.1.2 For purposes of this Section 4, Embedded Base means Dark Fiber Transport that was in service for DPI-Teleconnect as of March 11, 2005 in those wire centers that, as of such date, met the criteria set forth in 4.1.4.1. Subsequent disconnects or loss of End Users shall be removed from the Embedded Base.

4.1.3 For purposes of this Section 4.1, a Business Line is as defined in 47 C.F.R. § 51.5.

4.1.4 Notwithstanding anything to the contrary in this Agreement, BellSouth shall make available Dark Fiber Transport as described in this Section 4.1 only for DPI-Teleconnect's Embedded Base during the Transition Period:

4.1.4.1 Dark Fiber Transport where both wire centers at the end points of the route contain twenty-four thousand (24,000) or more Business Lines or three (3) or more fiber-based collocators.

4.1.5 A list of wire centers meeting the criteria set forth in Section 4.1.4 above as ordered by the Georgia Public Service Commission in Docket No. 19341-U, ("Initial List") is attached to BellSouth's Carrier Notification Letter SN91086068, dated March 30, 2006, which is available on BellSouth's Interconnection Services Web site.

4.1.6 Transition Period Pricing. From March 11, 2005, through the completion of the Transition Period, BellSouth shall charge a rate for DPI-Teleconnect's Embedded Base and Excess of Dark Fiber Transport and Embedded Base Dark Fiber Transport Entrance Facilities shall be equal to 115% of the rates set forth in the Parties' Amendment to the Agreement to implement Georgia Public Service Commission's Letter Order dated March 2, 2006 in docket 14361-U.

4.1.7 The Transition Period shall apply only to DPI-Teleconnect's Embedded Base of Dark Fiber Transport and Dark Fiber Entrance Facilities. DPI-Teleconnect shall not add new Dark Fiber Transport as described in this Section 4.1 except pursuant to the self-certification process as set forth in Section 5 of this Attachment and as set forth in Section 12 below. Further, DPI-Teleconnect shall not add new Dark Fiber Entrance Facilities pursuant to this Agreement.

4.1.8 Once a wire center exceeds either of the thresholds set forth in Section 4.1.4 above, no future Dark Fiber Transport unbundling will be required in that wire center.

4.1.9 No later than June 10, 2006 DPI-Teleconnect shall submit spreadsheet(s) identifying all of the Embedded Base of Dark Fiber Transport and Dark Fiber Entrance Facilities to be either disconnected or converted to other BellSouth services as Conversions pursuant to Section 15.1 below. The Parties shall negotiate a project schedule for the Conversion of the Embedded Base. In the case of disconnection, the applicable disconnect charges set forth in this Agreement shall apply.

4.1.10 If DPI-Teleconnect fails to submit the spreadsheet(s) specified in Section 4.1.9 above for all of its Embedded Base prior to June 10, 2006, BellSouth will identify DPI-Teleconnect's remaining Embedded Base, if any, and will transition such circuits to the equivalent tariffed BellSouth service(s) effective September 10, 2006. Those circuits identified and transitioned by BellSouth pursuant to this Section 4.1.10 shall be subject to 115% of the switch-as-is rates set forth in the amendment incorporating into this

Agreement the Georgia Public Service Commission's Letter Order dated March 2, 2006 in docket 14361-U.

4.1.11 For Embedded Base circuits in place as of September 11, 2006, the applicable recurring tariff charge shall apply to each circuit as of September 11, 2006.

<u>Issue 4</u> –What is the appropriate language to implement BellSouth's obligation to provide Section 251 unbundled access to high-capacity loops and dedicated transport and how should the following terms be defined? (i) Business Line; (ii) Fiber-Based Collocator; (iii) Building (iv) Route; (v) Is a CLEC entitled to obtain DS3 transport from a Tier 3 wire center to each of two or more Tier 1 or Tier 2 wire centers? (vi) Is a CLEC entitled to obtain dark fiber transport from a Tier 3 wire center to each of two or more Tier 1 or Tier 2 wire centers?

5. Prior to submitting an order pursuant to this Agreement for high capacity (DS1 or above) Dedicated Transport or high capacity Loops, DPI-Teleconnect shall undertake a reasonably diligent inquiry to determine whether DPI-Teleconnect is entitled to unbundled access to such Network Elements in accordance with the terms of this Agreement. By submitting any such order, DPI-Teleconnect self-certifies that to the best of DPI-Teleconnect's knowledge, the high capacity Dedicated Transport or high capacity Loop requested is available as a Network Element pursuant to this Attachment. Upon receiving such order, BellSouth shall process the request in reliance upon DPI-Teleconnect's self-certification. To the extent BellSouth believes that such request does not comply with the terms of this Attachment, BellSouth shall seek dispute resolution in accordance with the General Terms and Conditions of this Agreement. If BellSouth prevails in such dispute resolution proceeding, DPI-Teleconnect shall be liable to BellSouth for the difference between the rate for the equivalent BellSouth alternative arrangement and the self certified UNE, plus interest, on such rate differential.

5.1 In the event that (1) BellSouth designates a wire center as non-impaired, (2) DPI-Teleconnect converts existing UNEs to other services or orders new services as services other than UNEs, (3) DPI-Teleconnect otherwise would have been entitled to UNEs in such wire center at the time alternative services provisioned, and (4) BellSouth acknowledges or a state or federal agency regulatory body with authority determines that, at the time BellSouth designated such wire center as non-impaired, such wire center did not meet the FCC's non-impairment criteria, then upon request of DPI-Teleconnect, BellSouth shall transition to UNEs any alternative services in such wire center that were established after such wire center was designated as non-impaired. In such instances, BellSouth shall refund DPI-Teleconnect the difference between the rate paid by DPI-Teleconnect for such services and the applicable UNE rate, including but not limited to any charges associated with the unnecessary conversion from UNE to other wholesale services.

6. A Business Line is defined in 47 CFR § 51.5.

7. A Fiber-Based Collocator is defined in 47 CFR § 51.5.

8. A Building is defined as a permanent physical structure including, but not limited to, a structure in which people reside, or conduct business or work on a daily basis and through which there is one centralized point of entry in the structure through which all telecommunications services must transit. As an example only, a high rise office building with a general telecommunications equipment room through which all telecommunications services to that building's tenants must pass would be a single "building" for purposes of this Attachment 2. Two or more physical areas served by individual points of entry through which telecommunications services must transit will be considered separate buildings. For instance, a strip mall with individual businesses obtaining telecommunications services from different access points on the building(s) will be considered individual buildings, even though they might share common walls.

9. A route is defined as a transmission path between one of BellSouth's wire centers or switches and another of BellSouth's wire centers or switches. A route between two (2) points may pass through one or more intermediate wire centers or switches. Transmission paths between identical end points are the same "route", irrespective of whether they pass through the same intermediate wire centers or switches, if any.

Issue 5 – a) Does the Commission have the authority to determine whether or not BellSouth's application of the FCC's Section 251 non-impairment criteria for high-capacity loops and transport is appropriate?
b) What procedures should be used to identify those wire centers that satisfy the FCC's Section 251 non-impairment criteria for high-capacity loops and transport?
c) What language should be included in agreements to reflect the procedures identified in (b)?

10. Modifications and Updates to the Wire Center List and Subsequent Transition Periods for DS1 and/or DS3 Loops

10.1 In the event BellSouth identifies additional wire centers that meet the criteria set forth in Section 1.4.6 above, but that were not included in the Initial Wire Center List, BellSouth shall provide notice of such additional wire centers in a Carrier Notification Letter (CNL) sent to the point of contact in this Agreement, or in the absence of such point of contact, BellSouth shall post the CNL on BellSouth's Web site. Each such list of additional wire centers shall be considered a "Subsequent Wire Center List."

10.2 Effective ten (10) business days after the date of BellSouth's notice providing a Subsequent Wire Center List, BellSouth shall not be required to unbundle DS1 and/or DS3 Loops, as applicable, in such additional wire center(s), except pursuant to the self-certification process as set forth in Section 5 above.

10.3 For purposes of this Section 10, BellSouth shall make available DS1 and DS3 Loops that were in service for DPI-Teleconnect in a wire center on the Subsequent Wire Center List as of the tenth (10th) business day after the date of BellSouth's CNL identifying the Subsequent Wire Center List (Subsequent Embedded Base) until one hundred and ten (110) days after the tenth (10th) business day from the date of BellSouth's CNL identifying the Subsequent Wire Center List (Subsequent Transition Period).

10.4 Subsequent disconnects or loss of End Users shall be removed from the Subsequent Embedded Base.

10.5 The applicable rate for the Subsequent Embedded Base during the Subsequent Transition Period shall be 115% of the rate for such Loops set forth in the Parties' Amendment to the Agreement to implement the Georgia Public Service Commission's Letter Order dated March 2, 2006 in Docket No.14361-U.

10.6 No later than forty (40) days from BellSouth's CNL identifying the Subsequent Wire Center List, DPI-Teleconnect shall submit a spreadsheet(s) identifying the Subsequent Embedded Base of circuits to be disconnected or converted to other BellSouth services. In the case of disconnection, the applicable disconnect charges set forth in this Agreement shall apply.

10.7 If DPI-Teleconnect fails to submit the spreadsheet(s) specified in Section 10.6 above for all of its Subsequent Embedded Base within forty (40) days after the date of BellSouth's CNL identifying the Subsequent Wire Center List BellSouth will identify DPI-Teleconnect's remaining Subsequent Embedded Base, if any, and will transition such circuits to BellSouth's 271 equivalent service set forth in Section 26 below. Those circuits identified and transitioned by BellSouth pursuant to this Section 10.7 shall be subject to 115% of the switch-as-is rate set forth in the Parties' Amendment to the Agreement to implement the Georgia Public Service Commission's Letter Order dated March 2, 2006 in Docket No.14361-U.

10.8 The applicable recurring 271 rate set forth in Exhibit B shall apply to the Subsequent Embedded Base as of the 110th day after the tenth business day from the date of BellSouth's CNL identifying the Subsequent Embedded Base.

11. <u>Modifications and Updates to the Wire Center List and Subsequent Transition Periods for DS1 and/or DS3 Transport</u>

11.1 In the event BellSouth identifies additional wire centers that meet the criteria set forth in Sections 3.2.11 or 3.2.12 above, but that were not included in the Initial Wire Center List, BellSouth shall provide notice of such additional wire centers in a Carrier Notification Letter (CNL) sent to the point of contact in this Agreement, or in the absence of such point of contact, BellSouth shall post the CNL on BellSouth's Web site. Each such

list of additional wire centers shall be considered a "Subsequent Wire Center List."

11.2 Effective ten (10) business days after the date of BellSouth's notice providing a Subsequent Wire Center List, BellSouth shall not be required to provide DS1 and DS3 Dedicated Transport, as applicable, in such additional wire center(s), except pursuant to the self-certification process as set forth in Section 5 above.

11.3 For purposes of this Section 11, BellSouth shall make available DS1 and DS3 Dedicated Transport that were in service for DPI-Teleconnect in a wire center on the Subsequent Wire Center List as of the tenth (10th) business day after the date of BellSouth's CNL identifying the Subsequent Wire Center List (Subsequent Embedded Base) until one hundred and ten (110) days after the tenth (10th) business day from the date of BellSouth's CNL identifying the Subsequent Wire Center List (Subsequent Transition Period).

11.4 Subsequent disconnects or loss of End Users shall be removed from the Subsequent Embedded Base.

11.5 The applicable rate for the Subsequent Embedded Base during the Subsequent Transition Period shall be 115% of the rate for such DS1 and DS3 Dedicated Transport set forth in the Parties' Amendment to the Agreement to implement the Georgia Public Service Commission's Letter Order dated March 2, 2006 in Docket No.14361-U.

11.6 No later than forty (40) days from BellSouth's CNL identifying the Subsequent Wire Center List DPI-Teleconnect shall submit a spreadsheet(s) identifying the Subsequent Embedded Base of circuits to be disconnected or converted to other BellSouth services. In the case of disconnection, the applicable disconnect charges set forth in this Agreement shall apply.

11.7 If DPI-Teleconnect fails to submit the spreadsheet(s) specified in Section 11.6 above for all of its Subsequent Embedded Base within forty (40) days after the date of BellSouth's CNL identifying the Subsequent Wire Center List, BellSouth will identify DPI-Teleconnect's remaining Subsequent Embedded Base, if any, and will transition such circuits to BellSouth's 271 equivalent service as set forth in Section 26 below. Those circuits identified and transitioned by BellSouth pursuant to this Section 11.7 shall be subject to 115% of the switch-as-is rate set forth in the Parties' Amendment to the Agreement to implement the Georgia Public Service Commission's Letter Order dated March 2, 2006 in Docket No.14361-U.

11.8 The applicable 271 rate set forth in the tariff shall apply to the Subsequent Embedded Base as of the 110th day after the 10th business day from the date of BellSouth's CNL identifying the Subsequent Embedded Base.

12. **Modifications and Updates to the Wire Center List and Subsequent Transition Periods for Dark Fiber Transport**

12.1 In the event BellSouth identifies additional wire centers that meet the criteria set forth in Section 4 above, but that were not included in the Initial Wire Center List, BellSouth shall provide notice of such additional wire centers in a Carrier Notification Letter (CNL) sent to the point of contact in this Agreement, or in the absence of such point of contact, BellSouth shall post the CNL on BellSouth's Web site. Each such list of additional wire centers shall be considered a "Subsequent Wire Center List."

12.2 Effective ten (10) business days after the date of BellSouth's notice providing a Subsequent Wire Center List, BellSouth shall not be required to provide unbundled access to Dark Fiber Transport, as applicable, in such additional wire center(s), except pursuant to the self-certification process as set forth in Section 5 above.

12.3 For purposes of this Section 12, BellSouth shall make available Dark Fiber Transport that was in service for DPI-Teleconnect in a wire center on the Subsequent Wire Center List as of the tenth (10th) business day after the date of BellSouth's CNL identifying the Subsequent Wire Center List (Subsequent Embedded Base) until one hundred and ten (110) days after the tenth (10th) business day from the date of BellSouth's CNL identifying the Subsequent Wire Center List (Subsequent Transition Period).

12.4 Subsequent disconnects or loss of End Users shall be removed from the Subsequent Embedded Base.

12.5 The applicable rate for the Subsequent Embedded Base during the Subsequent Transition Period shall be 115% of the rate for such Dark Fiber Transport set forth in the Parties' Amendment to the Agreement to implement the Georgia Public Service Commission's Letter Order dated March 2, 2006 in Docket No.14361-U.

12.6 No later than forty (40) days from BellSouth's CNL identifying the Subsequent Wire Center List, DPI-Teleconnect shall submit a spreadsheet(s) identifying the Subsequent Embedded Base of circuits to be disconnected or converted to other BellSouth services. In the case of disconnection, the applicable disconnect charges set forth in this Agreement shall apply.

12.7 If DPI-Teleconnect fails to submit the spreadsheet(s) specified in Section 12.6 above for all of its Subsequent Embedded Base within forty (40) days after the date of BellSouth's CNL identifying the Subsequent Wire Center List, BellSouth will identify DPI-Teleconnect's remaining Subsequent Embedded Base, if any, and will transition such circuits to BellSouth's equivalent tariffed service set forth in Section 26 below. Those circuits identified and transitioned by BellSouth pursuant to this Section 12.7 shall be subject to 115% of the switch-as-is rate set forth in the Parties' Amendment to the Agreement to implement the Georgia Public Service Commission's Letter Order dated March 2, 2006 in Docket No.14361-U.

12.8 The applicable tariff rate shall apply to the Subsequent Embedded Base as of the 110th day after the 10th business day from the date of BellSouth's CNL identifying the Subsequent Embedded Base.

<u>Issue 10</u> – Transition of Delisted Network Elements to Which No Specified Transition Period Applies - What rates terms and conditions should govern the transition of existing network elements that BellSouth is no longer obligated to provide as Section 251 UNEs to non-Section 251 network elements and other services and (a) what is the proper treatment for such network elements at the end of the transition period,; and (b) what is the appropriate transition period, and what are the appropriate rates, terms and conditions during such transition period, for unbundled high-capacity loops, high capacity transport, and dark fiber transport in and between wire that do not meet the FCC's non-impairment standards at this time, but that meet such standards in the future?

13. Except to the extent expressly provided otherwise in this Attachment, DPI-Teleconnect may not maintain unbundled network elements or combinations of unbundled network elements, that are no longer offered pursuant to Section 251of the Act (collectively "Arrangements"). In the event DPI-Teleconnect has in place any such Arrangements after the Effective Date of this Agreement, this amendment shall serve as BellSouth's written notice to DPI-Teleconnect that DPI-Teleconnect has thirty (30) days to transition all DS1 Local Switching and UNE-P arrangements and sixty (60) days to transition all other Arrangements. If DPI-Teleconnect fails to submit orders to disconnect or convert such Arrangements within the aforementioned timeframes, BellSouth will transition such circuits to the equivalent tariffed BellSouth service(s). To the extent no tariff equivalent service exists, BellSouth shall disconnect such facility or arrangement. Those circuits identified and transitioned by BellSouth pursuant to this Section 13 shall be subject to 115% of the applicable switch-as-is charges set forth in the Parties' Amendment to the Agreement to implement the Georgia Public Service Commission's Letter Order dated March 2, 2006 in Docket No.14361-U.

13.1 The applicable recurring resale or tariffed charge shall apply to each circuit as of the Effective Date of this Agreement.

<u>Issue 14 –</u> What is the scope of commingling allowed under the FCC's rules and orders and what language should be included in Interconnection Agreements to implement commingling (including rates)?

14. **<u>Commingling of Services</u>**

14.1 Commingling means the connecting, attaching, or otherwise linking of a Network Element, or a Combination, to one or more Telecommunications Services or facilities that DPI-Teleconnect has obtained at wholesale from BellSouth, or the combining of a Network Element or Combination with one or more such wholesale Telecommunications Services or facilities, consistent with the Georgia Public Service Commission's Order dated March 2, 2006 in Docket No. 19341-U. To the extent a Section 271

facility or service is obtained at wholesale, BellSouth will commingle such facility or service with Section 251 Network Elements or Combinations. DPI-Teleconnect must comply with all rates, terms or conditions applicable to such wholesale Telecommunications Services or facilities.

14.2 Subject to the limitations set forth elsewhere in this Attachment, BellSouth shall not deny access to a Network Element or a Combination on the grounds that one or more of the elements: (1) is connected to, attached to, linked to, or combined with such a facility or service obtained from BellSouth; or (2) shares part of BellSouth's network with access services or inputs for mobile wireless services and/or interexchange services.

14.3 Unless otherwise agreed to by the Parties, the Network Element portion of a commingled circuit will be billed at the rates set forth in the Parties' Amendment to the Agreement to implement the Georgia Public Service Commission's Letter Order dated March 2, 2006 in Docket No.14361-U, and the remainder of the circuit or service will be billed in accordance with either BellSouth's tariffed rates or the 271 rates set forth in Exhibit B of this Agreement, as applicable.

14.4 When multiplexing equipment is attached to a commingled circuit, the multiplexing equipment will be billed from the same agreement or tariff as the higher bandwidth circuit. Central Office Channel Interfaces (COCI) will be billed from the same agreement or tariff as the lower bandwidth circuit.

<u>Issue 15</u> – Is BellSouth required to provide conversion of special access circuits to UNE pricing, and, if so, at what rates, terms and conditions and during what timeframe should such new requests for such conversions be effectuated?

<u>Issue 16</u> – What are the appropriate rates, terms and conditions and effective dates, if any, for conversion requests that were pending on the effective date of the TRO?

15. Conversion of Wholesale Services to Network Elements or Network Elements to Wholesale Services.

15.1 Upon request, BellSouth shall convert a wholesale service, or group of wholesale services, to the equivalent Network Element or Combination that is available to DPI-Teleconnect pursuant to this Agreement, or convert a Network Element or Combination that is available to DPI-Teleconnect under this Agreement to an equivalent wholesale service or group of wholesale services offered by BellSouth (collectively "Conversion"). BellSouth shall charge 115% of the switch-as-is rate set forth in the Parties' Amendment to the Agreement to implement the Georgia Public Service Commission's Letter Order dated March 2, 2006 in Docket No.14361-U for Conversions to specific Network Elements or Combinations**.** BellSouth shall also charge the same nonrecurring switch-as-is rates when converting from Network Elements or Combinations. Any rate change resulting from the Conversion will be effective as of the next billing cycle following BellSouth's receipt of a complete and accurate

Conversion request from the CLEC. A Conversion shall be considered termination for purposes of any volume and/or term commitments and/or grandfathered status between CLEC and BellSouth. Any change from a wholesale service/group of wholesale services to a Network Element/Combination, or from a Network Element/Combination to a wholesale service/group of wholesale services that requires a physical rearrangement will not be considered to be a Conversion for purposes of this Agreement. BellSouth shall not require physical rearrangements if the Conversion can be completed through record changes only. Orders for Conversions will be handled in accordance with the guidelines set forth in the Ordering Guidelines and Processes and CLEC Information Packages as referenced in Section 15.3 below.

15.2 To the extent, DPI-Teleconnect had a Conversion request pending between October 2, 2003 and the effective date of this Amendment, such Conversion shall be deemed converted as of the date of such request.

15.3 <u>Ordering Guidelines and Processes</u>

15.3.1 For information regarding Ordering Guidelines and Processes for various Network Elements, Combinations and Other Services, DPI-Teleconnect should refer to the "Guides" section of the BellSouth Interconnection Web site.

15.3.2 Additional information may also be found in the individual CLEC Information Packages located at the "CLEC UNE Products" on BellSouth's Interconnection Web site.

15.3.3 The provisioning of Network Elements, Combinations and Other Services to DPI-Teleconnect's Collocation Space will require cross-connections within the central office to connect the Network Element, Combinations or Other Services to the demarcation point associated with DPI-Teleconnect's Collocation Space. These cross-connects are separate components that are not considered a part of the Network Element, Combinations or Other Services and, thus, have a separate charge pursuant to this Agreement.

<u>Issue 19:</u> Line Splitting: What is the appropriate ICA language to implement BellSouth's obligations with regard to line splitting?

16. <u>Line Splitting</u>

16.1 Line splitting shall mean that DPI-Teleconnect purchases a whole loop and provides the splitter to provide voice and data services through an arrangement with a third party CLEC, who is either the provider of data services (Data CLEC) or the provider of voice services (Voice CLEC), to deliver voice and data service to End Users over the same Loop. The Voice CLEC and Data CLEC are different carriers, with DPI-Teleconnect being either the Voice CLEC or Data CLEC.

16.2 Line Splitting – UNE-L. In the event DPI-Teleconnect provides its own switching or obtains switching from a third party, DPI-Teleconnect may engage in line splitting arrangements with another CLEC using a splitter, provided by DPI-Teleconnect, in a Collocation Space at the central office where the loop terminates into a distribution frame or its equivalent.

16.3 Line Splitting – Loop and Port. To the extent DPI-Teleconnect is using a commingled arrangement that consists of an Unbundled Loop purchased pursuant to this Agreement and Local Switching provided by BellSouth pursuant to Section 271, BellSouth will permit DPI-Teleconnect to utilize Line Splitting. BellSouth shall charge the applicable rates ordered by the Georgia Public Service Commission in its March 2, 2006 Letter Order in docket 14361-U.

16.4 DPI-Teleconnect shall provide BellSouth with a signed LOA between it and the third party CLEC (Data **C**LEC or Voice CLEC) with which it desires to provision Line Splitting services, where DPI-Teleconnect will not provide voice and data services.

16.5 Provisioning Line Splitting and Splitter Space – Loop and Port

16.5.1 The Data LEC, Voice CLEC, or a third party may provide the splitter. When DPI-Teleconnect or its authorized agent owns the splitter, Line Splitting requires the following: a non-designed analog Loop from the serving wire center to the NID at the End User's location; a collocation cross-connection connecting the Loop to the collocation space; and a second collocation cross-connection from the collocation space connected to a voice port.

16.5.2 An unloaded 2-wire copper Loop must serve the End User. The meet point for the Voice CLEC and the Data CLEC is the point of termination on the MDF for the Data CLEC's cable and pairs.

16.5.3 The foregoing procedures are applicable to migration from a loop and port arrangement to Line Splitting Service, including a Line splitting service that includes a commingled arrangement of Loop and unbundled local switching pursuant to Section 271.

16.6 CLEC Provided Splitter – Line Splitting – Loop and Port and UNE-L

16.6.1 DPI-Teleconnect or its authorized agent may purchase, install and maintain central office POTS splitters in its collocation arrangements. DPI-Teleconnect or its authorized agent may use such splitters for access to its customers and to provide digital line subscriber services to its customers using the High Frequency Spectrum. Existing Collocation rules and procedures and the terms and conditions relating to Collocation set forth in Attachment 4-Central Office shall apply.

16.6.2 Any splitters installed by DPI-Teleconnect or its authorized agent in its collocation arrangement shall comply with ANSI T1.413, Annex E, or any future ANSI splitter Standards. DPI-Teleconnect or its authorized agent

may install any splitters that BellSouth deploys or permits to be deployed for itself or any BellSouth affiliate.

16.7 Provisioning Line Splitting and Splitter Space – UNE-L

16.7.1 **DPI-Teleconnect** provides the splitter when providing Line Splitting with UNE-L. When DPI-Teleconnect or its authorized agent owns the splitter, Line Splitting requires the following: a loop from NID at the End User's location to the serving wire center and terminating into a distribution frame or its equivalent.

16.8 Maintenance – Line Splitting – Loop and Port and UNE-L

16.8.1 BellSouth will be responsible for repairing troubles with the physical loop between the NID at the End User's premises and the termination point.

16.8.2 BellSouth must make all necessary network modifications, including providing nondiscriminatory access to operations support systems necessary for pre-ordering, ordering, provisioning, maintenance and repair, and billing for loops used in line splitting arrangements.

16.9 Indemnity

16.9.1 DPI-Teleconnect shall indemnify, defend and hold harmless BellSouth from and against any claims, losses, damages and costs incurred by BellSouth, which arise out of actions related to the other service provider, except to the extent caused by BellSouth's gross negligence or willful misconduct.

Issue 22 – What is the appropriate ICA language, if any, to address call related databases?

17.1 Automatic Location Identification/Data Management System

17.1.1 911 and E911 Databases

17.1.1.1 BellSouth shall provide DPI-Teleconnect with nondiscriminatory access to 911 and E911 databases on an unbundled basis, in accordance with 47 C.F.R. § 51.319 (f).

17.1.1.2 The ALI/DMS database contains End User information (including name, address, telephone information, and sometimes special information from the local service provider or End User) used to determine to which PSAP to route the call. The ALI/DMS database is used to provide enhanced routing flexibility for E911. DPI-Teleconnect will be required to provide the BellSouth 911 database vendor daily service order updates to E911 database in accordance with Section 17.3.1 below.

17.2 Technical Requirements

17.2.1 BellSouth's 911 database vendor shall provide DPI-Teleconnect the capability of providing updates to the ALI/DMS database through a specified electronic interface. DPI-Teleconnect shall contact BellSouth's 911 database vendor directly to request interface. DPI-Teleconnect shall

provide updates directly to BellSouth's 911 database vendor on a daily basis. Updates shall be the responsibility of DPI-Teleconnect and BellSouth shall not be liable for the transactions between DPI-Teleconnect and BellSouth's 911 database vendor.

17.2.2 It is DPI-Teleconnect's responsibility to retrieve and confirm statistical data and to correct errors obtained from BellSouth's 911 database vendor on a daily basis. All errors will be assigned a unique error code and the description of the error and the corrective action is described in the CLEC Users Guide for Facility Based Providers that is found on the BellSouth Interconnection Web site.

17.2.3 DPI-Teleconnect shall conform to the BellSouth standards as described in the CLEC Users Guide to E911 for Facilities Based Providers that is located on the BellSouth's Interconnection Web site.

17.2.4 Stranded Unlocks are defined as End User records in BellSouth's ALI/DMS database that have not been migrated for over ninety (90) days to DPI-Teleconnect, as a new provider of local service to the End User. Stranded Unlocks are those End User records that have been "unlocked" by the previous local exchange carrier that provided service to the End User and are open for DPI-Teleconnect to assume responsibility for such records.

17.2.5 Based upon End User record ownership information available in the NPAC database, BellSouth shall provide a Stranded Unlock annual report to DPI-Teleconnect that reflects all Stranded Unlocks that remain in the ALI/DMS database for over ninety (90) days. DPI-Teleconnect shall review the Stranded Unlock report, identify its End User records and request to either delete such records or migrate the records to DPI-Teleconnect within two (2) months following the date of the Stranded Unlock report provided by BellSouth. DPI-Teleconnect shall reimburse BellSouth for any charges BellSouth's database vendor imposes on BellSouth for the deletion of DPI-Teleconnect's records.

17.3 911 PBX Locate Service®. 911 PBX Locate Service is comprised of a database capability and a separate transport component.

17.3.1 Description of Product. The transport component provides a dedicated trunk path from a Private Branch Exchange (PBX) switch to the appropriate BellSouth 911 tandem.

17.3.1.1 The database capability allows DPI-Teleconnect to offer an E911 service to its PBX End Users that identifies to the PSAP the physical location of the DPI-Teleconnect PBX 911 End User station telephone number for the 911 call that is placed by the End User.

17.3.2 DPI-Teleconnect may order either the database capability or the transport component as desired or DPI-Teleconnect may order both components of the service.

17.3.3 911 PBX Locate Database Capability. DPI-Teleconnect's End User or DPI-Teleconnect's End User's database management agent (DMA) must provide the End User PBX station telephone numbers and corresponding address and location data to BellSouth's 911 database vendor. The data will be loaded and maintained in BellSouth's ALI database.

17.3.4 Ordering, provisioning, testing and maintenance shall be provided by DPI-Teleconnect pursuant to the 911 PBX Locate Marketing Service Description (MSD) that is located on the BellSouth Interconnection Web site.

17.3.5 DPI-Teleconnect's End User, or DPI-Teleconnect's End User database management agent must provide ongoing updates to BellSouth's 911 database vendor within a commercially reasonable timeframe of all PBX station telephone number adds, moves and deletions. It will be the responsibility of DPI-Teleconnect to ensure that the End User or DMA maintain the data pertaining to each End User's extension managed by the 911 PBX Locate Service product. DPI-Teleconnect should not submit telephone number updates for specific PBX station telephone numbers that are submitted by DPI-Teleconnect's End User, or DPI-Teleconnect's End User DMA under the terms of 911 PBX Locate product.

17.3.6 DPI-Teleconnect must provision all PBX station numbers in the same LATA as the E911 tandem.

17.3.7 DPI-Teleconnect agrees to release, indemnify, defend and hold harmless BellSouth from any and all loss, claims, demands, suits, or other action, or any liability whatsoever, whether suffered, made, instituted or asserted by DPI-Teleconnect's End User or by any other party or person, for any personal injury to or death of any person or persons, or for any loss, damage or destruction of any property, whether owned by DPI-Teleconnect or others, or for any infringement or invasion of the right of privacy of any person or persons, caused or claimed to have been caused, directly or indirectly, by the installation, operation, failure to operate, maintenance, removal, presence, condition, location or use of PBX Locate Service features or by any services which are or may be furnished by BellSouth in connection therewith, including but not limited to the identification of the telephone number, address or name associated with the telephone used by the party or parties accessing 911 services using 911 PBX Locate Service hereunder, except to the extent caused by BellSouth's gross negligence or wilful misconduct. DPI-Teleconnect is responsible for assuring that its authorized End Users comply with the provisions of these terms and that unauthorized persons do not gain access to or use the 911 PBX Locate Service through user names, passwords, or other identifiers assigned to DPI-Teleconnect's End User or DMA pursuant to these terms. Specifically, DPI-Teleconnect's End User or DMA must keep and protect from use by any unauthorized individual identifiers, passwords, and any other security token(s) and devices that are provided for access to this product.

17.3.8 DPI-Teleconnect may only use BellSouth PBX Locate Service solely for the purpose of validating and correcting 911 related data for DPI-Teleconnect's End Users' telephone numbers for which it has direct management authority.

17.3.9 911 PBX Locate Transport Component. The 911 PBX Locate Service transport component requires DPI-Teleconnect to order a CAMA type dedicated trunk from DPI-Teleconnect's End User premise to the appropriate BellSouth 911 tandem pursuant to the following provisions.

17.3.10 Except as otherwise set forth below, a minimum of two (2) End User specific, dedicated 911 trunks are required between the DPI-Teleconnect's End User premise and the BellSouth 911 tandem as described in BellSouth's Technical Reference (TR) 73576 and in accordance with the 911 PBX Locate Marketing Service Description located on the BellSouth Interconnection Web site. DPI-Teleconnect is responsible for connectivity between the End User's PBX and DPI-Teleconnect's switch or POP location. DPI-Teleconnect will then order 911 trunks from their switch or POP location to the BellSouth 911 tandem. The dedicated trunks shall be, at a minimum, DS0 level trunks configured as part of a digital interface (delivered over a DPI-Teleconnect purchased DS1 facility that hands off at a DS1 or higher level digital or optical interface). DPI-Teleconnect is responsible for ensuring that the PBX switch is capable of sending the calling station's Direct Inward Dial (DID) telephone number to the BellSouth 911 tandem in a specified Multi-frequency (MF) Address Signaling Protocol. If the PBX switch supports Primary Rate ISDN (PRI) and the calling stations are DID numbers, then the 911call can be transmitted using PRI, and there will be no requirement for the PBX Locate Transport component.

17.3.11 Ordering and Provisioning. DPI-Teleconnect will submit an Access Service Request (ASR) to BellSouth to order a minimum of two (2) End User specific 911 trunks from its switch or POP location to the BellSouth 911 tandem.

17.3.12 Testing and maintenance shall be provided by DPI-Teleconnect pursuant to the 911 PBX Locate Marketing Service description that is located on the BellSouth Interconnection Web site.

17.3.13 Rates. Rates for the 911 PBX Locate Service database component are set forth in Exhibit C. Trunks and facilities for 911 PBX Locate transport component may be ordered by DPI-Teleconnect pursuant to the terms and conditions set forth in Attachment 3.

Issue 23 - What is the appropriate language to implement BellSouth's obligation, if any, to offer unbundled access to newly deployed or "greenfield" fiber loops, including fiber loops deployed to the minimum point of entry (MPOE) of a multiple dwelling unit that is predominantly residential and what, if any impact does the ownership of the inside wiring from the MPOE to each end user have one this obligation?

18.1 Fiber to the Home (FTTH) loops are local loops consisting entirely of fiber optic cable, whether dark or lit, serving an End User's premises or, in the case of predominantly residential multiple dwelling units (MDUs), a fiber optic cable, whether dark or lit, that extends to the MDU minimum point of entry (MPOE). As defined in 47 C.F.R. 68.105(B), Fiber to the Curb (FTTC) loops are local loops consisting of fiber optic cable connecting to a copper distribution plant that is not more than five hundred (500) feet from the End User's premises or, in the case of predominantly residential MDUs, not more than five hundred (500) feet from the MDU's MPOE. The fiber optic cable in a FTTC loop must connect to a copper distribution plant at a serving area interface from which every other copper distribution subloop also is not more than five hundred (500) feet from the respective End User's premises.

18.2 In new build (Greenfield) areas, where BellSouth has only deployed FTTH/FTTC facilities, BellSouth is under no obligation to provide such FTTH and FTTC Loops. FTTH facilities include fiber loops deployed to the MPOE of a MDU that is predominantly residential regardless of the ownership of the inside wiring from the MPOE to each End User in the MDU.

<u>Issue 24:</u> What is the appropriate ICA language to implement BellSouth's obligation to provide unbundled access to hybrid loops?

19. A hybrid Loop is a local Loop, composed of both, fiber optic cable usually in the feeder plant and copper twisted wire or cable usually in the distribution plant. BellSouth shall provide DPI-Teleconnect with nondiscriminatory access to the time division multiplexing features, functions and capabilities of such hybrid Loop, on an unbundled basis to establish a complete transmission path between BellSouth's central office and an End User's premises.

<u>Issue 26:</u> What is the appropriate ICA language to implement BellSouth's obligation to provide RNMs?

<u>Issue 27:</u> What is the appropriate process for establishing a rate, if any, to allow for the cost of a routine network modification that is not already recovered in Commission-approved recurring and nonrecurring rates? What is the appropriate language, if any, to incorporate into the ICAs?

20. Routine Network Modifications

20.1 BellSouth will perform Routine Network Modifications (RNM) in accordance with FCC 47 CFR 51.319 (a)(7) and (e)(4) for Loops and Dedicated Transport provided under this Attachment. BellSouth shall make all routine network modifications to unbundled loop and transport facilities used by DPI-Teleconnect at DPI-Teleconnect's request where the requested loop and/or transport facility has already been constructed.

BellSouth shall perform these routine network modifications to facilities in a non-discriminatory fashion, without regard to whether the loop or transport facility being accessed was constructed on behalf, or in accordance with the specifications, of any carrier. A routine network modification is an activity that BellSouth regularly undertakes for its own customers. Routine network modifications include, but are not limited to, rearranging or splicing of cable; adding an equipment case; adding a doubler or repeater; adding a smart jack; installing a repeater shelf; adding a line card; deploying a new multiplexer or reconfiguring an existing multiplexer; and attaching electronic and other equipment that BellSouth ordinarily attaches to a loop or transport facility to serve its own customers. Routine network modifications may entail activities such as accessing manholes, deploying bucket trucks to reach aerial cable, and installing equipment casings. Routine network modifications do not include the construction of a new loop, or the installation of new aerial or buried cable for DPI-Teleconnect.

20.2 BellSouth shall perform routine network modifications pursuant to the existing non-recurring charges and recurring rates ordered by the state commission for the loop and transport facilities set forth in Exhibit A of Attachment 2 of the Agreement and not at an additional charge. RNM shall be performed within the intervals established for the Network Element and subject to the performance measurements and associated remedies set forth in Attachment 9 of this Agreement except to the extent BellSouth demonstrates that such RNM were not anticipated in the setting of such intervals. If BellSouth believes that it has not anticipated a requested network modification as being a RNM and has not recovered the costs of such RNM in the rates set forth in Exhibit A of Attachment 2 of the Agreement, BellSouth can seek resolution from the state commission. However, in the interim, BellSouth will perform the RNM at the existing recurring and non-recurring rates associated with the provision of the loop or transport facility. There may not be any double recovery or retroactive recovery of these costs.

Issue 28: What is the appropriate language, if any, to address access to overbuild deployments of fiber to the home and fiber to the curb facilities?

21. Furthermore, in FTTH/FTTC overbuild areas where BellSouth has not yet retired copper facilities, BellSouth is not obligated to ensure that such copper Loops in that area are capable of transmitting signals prior to receiving a request for access to such Loops by DPI-Teleconnect. If a request is received by BellSouth for a copper Loop, and the copper facilities have not yet been retired, BellSouth will restore the copper Loop to serviceable condition if technically feasible. In these instances of Loop orders in an FTTH/FTTC overbuild area, BellSouth's standard Loop provisioning interval will apply.

<u>Issue 29:</u> What is the appropriate ICA language to implement BellSouth's EEL audit rights, if any, under the TRO?

22 <u>EELs Audit provisions</u>

22.1 BellSouth may, on an annual basis audit DPI-Teleconnect's records based on cause, in order to verify compliance with the high capacity EEL eligibility criteria. To invoke its limited right to audit, BellSouth will send a Notice of Audit to DPI-Teleconnect stating its concern that DPI-Teleconnect is not complying with the service eligibility requirements as set forth above and a concise statement of the reasons therefore. Such Notice of Audit will be delivered to DPI-Teleconnect no less than thirty (30) calendar days prior to the date upon which BellSouth seeks to commence an audit. BellSouth is not required to provide documentation, as distinct from a statement of concern, to support its basis for an audit, or seek the concurrence of the requesting carrier before selecting the location of the audit.

22.2 The audit shall be conducted by a third party independent auditor, retained and paid for by BellSouth. BellSouth may select the independent auditor without the prior approval of DPI-Teleconnect or the Commission. Challenges to the independence of the auditor may be filed with the Commission only after the audit has been concluded. The audit must be performed in accordance with the standards established by the American Institute for Certified Public Accountants (AICPA) which will require the auditor to perform an "examination engagement" and issue an opinion regarding DPI-Teleconnect's compliance with the high capacity EEL eligibility criteria. AICPA standards and other AICPA requirements will be used to determine the independence of an auditor. The independent auditor's report will conclude whether DPI-Teleconnect complied in all material respects with the applicable service eligibility criteria. Consistent with standard auditing practices, such audits require compliance testing designed by the independent auditor.

22.3 To the extent the independent auditor's report concludes that DPI-Teleconnect failed to comply with the service eligibility criteria, DPI-Teleconnect must true-up any difference in payments, convert all noncompliant circuits to the appropriate service, and make the correct payments on a going-forward basis.

22.4 To the extent the independent auditor's report concludes that DPI-Teleconnect failed to comply in all material respects with the service eligibility criteria, DPI-Teleconnect shall reimburse BellSouth for the cost of the independent auditor. To the extent the independent auditor's report concludes that DPI-Teleconnect did comply in all material respects with

the service eligibility criteria, BellSouth will reimburse DPI-Teleconnect for its reasonable and demonstrable costs associated with the audit. DPI-Teleconnect will maintain appropriate documentation to support its certifications. The Parties shall provide such reimbursement within thirty (30) calendar days of receipt of a statement of such costs.

23. DPI-Teleconnect shall not obtain a Network Element for the exclusive provision of mobile wireless services or interexchange services.

24. Facilities that do not terminate at a demarcation point at an End User premises, including, by way of example, but not limited to, facilities that terminate to another carrier's switch or premises, a cell site, Mobile Switching Center or base station, do not constitute local Loops under Section 251, except to the extent that DPI-Teleconnect may require Loops to such locations for the purpose of providing telecommunications services to its personnel at those locations.

25. Subloop Elements.

25.1 Where facilities permit, BellSouth shall offer access to its Unbundled Subloop (USL) elements as specified herein.

25.2 Unbundled Subloop Distribution (USLD)

25.2.1 The USLD facility is a dedicated transmission facility that BellSouth provides from an End User's point of demarcation to a BellSouth cross-connect device. The BellSouth cross-connect device may be located within a remote terminal (RT) or a stand-alone cross-box in the field or in the equipment room of a building. The USLD media is a copper twisted pair that can be provisioned as a 2-wire or 4-wire facility. BellSouth will make available the following subloop distribution offerings where facilities exist:

USLD – Voice Grade (USLD-VG)
Unbundled Copper Subloop (UCSL)
USLD – Intrabuilding Network Cable (USLD-INC (aka riser cable))

25.2.2 USLD-VG is a copper subloop facility from the cross-box in the field up to and including the point of demarcation at the End User's premises and may have load coils.

25.2.3 UCSL is a copper facility eighteen thousand (18,000) feet or less in length provided from the cross-box in the field up to and including the End User's point of demarcation. If available, this facility will not have any intervening equipment such as load coils between the End User and the cross-box.

25.2.4 If DPI-Teleconnect requests a UCSL and it is not available, DPI-Teleconnect may request the copper Subloop facility be modified pursuant

to the ULM process to remove load coils and/or excessive bridged taps. If load coils and/or excessive bridged taps are removed, the facility will be classified as a UCSL.

25.2.5 USLD-INC is the distribution facility owned or controlled by BellSouth inside a building or between buildings on the same property that is not separated by a public street or road. USLD-INC includes the facility from the cross-connect device in the building equipment room up to and including the point of demarcation at the End User's premises.

25.2.6 Upon request for USLD-INC from DPI-Teleconnect, BellSouth will install a cross-connect panel in the building equipment room for the purpose of accessing USLD-INC pairs from a building equipment room. The cross-connect panel will function as a single point of interconnection (SPOI) for USLD-INC and will be accessible by multiple carriers as space permits. BellSouth will place cross-connect blocks in twenty five (25) pair increments for DPI-Teleconnect's use on this cross-connect panel. DPI-Teleconnect will be responsible for connecting its facilities to the twenty five (25) pair cross-connect block(s).

25.2.7 For access to Voice Grade USLD and UCSL, DPI-Teleconnect shall install a cable to the BellSouth cross-box pursuant to the terms and conditions for physical collocation for remote sites set forth in Attachment 4. This cable would be connected by a BellSouth technician within the BellSouth cross-box during the set-up process. DPI-Teleconnect's cable pairs can then be connected to BellSouth's USL within the BellSouth cross-box by the BellSouth technician.

25.2.8 Through the SI process, BellSouth will determine whether access to USLs at the location requested by DPI-Teleconnect is technically feasible and whether sufficient capacity exists in the cross-box. If existing capacity is sufficient to meet DPI-Teleconnect's request, then BellSouth will perform the site set-up as described in the CLEC Information Package, located at BellSouth's Interconnection Web site: www.interconnection.bellsouth.com/products/html/unes.html.

25.2.9 The site set-up must be completed before DPI-Teleconnect can order Subloop pairs. For the site set-up in a BellSouth cross-connect box in the field, BellSouth will perform the necessary work to splice DPI-Teleconnect's cable into the cross-connect box. For the site set-up inside a building equipment room, BellSouth will perform the necessary work to install the cross-connect panel and the connecting block(s) that will be used to provide access to the requested USLs.

25.2.10 Once the site set-up is complete, DPI-Teleconnect will request Subloop pairs through submission of a LSR form to the LCSC. OC is required with USL pair provisioning when DPI-Teleconnect requests reuse of an existing facility, and the OC charge shall be billed in addition to the USL pair rate. For expedite requests by DPI-Teleconnect for Subloop pairs, expedite charges will apply for intervals less than five (5) days.

25.2.11 USLs will be provided in accordance with BellSouth's TR73600 Unbundled Local Loop Technical Specifications.

25.3 Unbundled Network Terminating Wire (UNTW)

25.3.1 UNTW is unshielded twisted copper wiring that is used to extend circuits from an intra-building network cable terminal or from a building entrance terminal to an individual End User's point of demarcation. It is the final portion of the Loop that in multi-subscriber configurations represents the point at which the network branches out to serve individual subscribers.

25.3.1.1 This element will be provided in MDUs and/or Multi-Tenants Units (MTUs) where either Party owns wiring all the way to the End User's premises. Neither Party will provide this element in locations where the property owner provides its own wiring to the End User's premises, where a third party owns the wiring to the End User's premises.

25.3.2 Requirements

25.3.2.1 On a multi-unit premises, upon request of the other Party (Requesting Party), the Party owning the network terminating wire (Provisioning Party) will provide access to UNTW pairs on an Access Terminal that is suitable for use by multiple carriers at each Garden Terminal or Wiring Closet.

25.3.2.2 The Provisioning Party shall not be required to install new or additional NTW beyond existing NTW to provision the services of the Requesting Party.

25.3.2.3 In existing MDUs and/or MTUs in which BellSouth does not own or control wiring (INC/NTW) to the End Users premises, and DPI-Teleconnect does own or control such wiring, DPI-Teleconnect will install UNTW Access Terminals for BellSouth under the same terms and conditions as BellSouth provides UNTW Access Terminals to DPI-Teleconnect.

25.3.2.4 In situations in which BellSouth activates a UNTW pair, BellSouth will compensate DPI-Teleconnect for each pair activated commensurate to the price specified in DPI-Teleconnect's Agreement.

25.3.2.5 Upon receipt of the UNTW SI requesting access to the Provisioning Party's UNTW pairs at a multi-unit premises, representatives of both Parties will participate in a meeting at the site of the requested access. The purpose of the site visit will include discussion of the procedures for installation and location of the Access Terminals. By request of the Requesting Party, an Access Terminal will be installed either adjacent to each of the Provisioning Party's Garden Terminal or inside each Wiring Closet. The Requesting Party will deliver and connect its central office facilities to the UNTW pairs within the Access Terminal. The Requesting Party may access any available pair on an Access Terminal. A pair is available when a pair is not being utilized to provide service or where the End User has requested a change in its local service provider to the

Requesting Party. Prior to connecting the Requesting Party's service on a pair previously used by the Provisioning Party, the Requesting Party is responsible for ensuring the End User is no longer using the Provisioning Party's service or another CLEC's service before accessing UNTW pairs.

25.3.2.6 Access Terminal installation intervals will be established on an individual case basis.

25.3.2.7 The Requesting Party is responsible for obtaining the property owner's permission for the Provisioning Party to install an Access Terminal(s) on behalf of the Requesting Party. The submission of the SI by the Requesting Party will serve as certification by the Requesting Party that such permission has been obtained. If the property owner objects to Access Terminal installations that are in progress or within thirty (30) days after completion and demands removal of Access Terminals, the Requesting Party will be responsible for costs associated with removing Access Terminals and restoring the property to its original state prior to Access Terminals being installed.

25.3.2.8 The Requesting Party shall indemnify and hold harmless the Provisioning Party against any claims of any kind that may arise out of the Requesting Party's failure to obtain the property owner's permission. The Requesting Party will be billed for nonrecurring and recurring charges for accessing UNTW pairs at the time the Requesting Party activates the pair(s). The Requesting Party will notify the Provisioning Party within five (5) business days of activating UNTW pairs using the LSR form.

25.3.2.9 If a trouble exists on a UNTW pair, the Requesting Party may use an alternate spare pair that serves that End User if a spare pair is available. In such cases, the Requesting Party will re-terminate its existing jumper from the defective pair to the spare pair. Alternatively, the Requesting Party will isolate and report troubles in the manner specified by the Provisioning Party. The Requesting Party must tag the UNTW pair that requires repair. If the Provisioning Party dispatches a technician on a reported trouble call and no UNTW trouble is found, the Provisioning Party will charge Requesting Party for time spent on the dispatch and testing the UNTW pair(s).

25.3.2.10 If the Requesting Party initiates the Access Terminal installation and the Requesting Party has not activated at least ten percent (10%) of the capacity of the Access Terminal installed pursuant to the Requesting Party's request for an Access Terminal within six (6) months of installation of the Access Terminal, the Provisioning Party will bill the Requesting Party a nonrecurring charge equal to the actual cost of provisioning the Access Terminal.

25.3.3.11 If the Provisioning Party determines that the Requesting Party is using the UNTW pairs without reporting the activation of the pairs, the Requesting Party will be billed for the use of that pair back to the date the End User began receiving service from the Requesting Party at that location. Upon

request, the Requesting Party will provide copies of its billing record to substantiate such date. If the Requesting Party fails to provide such records, then the Provisioning Party will bill the Requesting Party back to the date of the Access Terminal installation.

26. 271 Requirements

26.1 This Section sets forth terms and conditions for de-listed network elements that BellSouth is required to offer pursuant to the Georgia Public Service Commission's Order in Docket No. 19341-U (Order) to DPI-Teleconnect for DPI-Teleconnect's provision of Telecommunications Services in accordance with its obligations under Section 271 of the Act ("271").

26.1.1 To the extent DS1 and/or DS3 Loops, DS1 and/or DS3 Dedicated Transport and Multiplexing are not available elsewhere in the Agreement, these services will be made available pursuant to Section 271 of the Act at the rates set forth in Exhibit B to this Amendment.

26.2 271 Dark Fiber Loops, 271 DS1 and DS3 Entrance Facilities, and 271 Dark Fiber Transport Facilities are available at the rates, terms, and conditions set forth in the applicable BellSouth tariff.

26.3 Line Sharing

26.3.1 General**.** Line Sharing is defined as the process by which DPI-Teleconnect provides digital subscriber line service ("xDSL") over the same copper Loop that BellSouth uses to provide retail voice service, with BellSouth using the low frequency portion of the Loop and DPI-Teleconnect using the high frequency spectrum (as defined below) of the Loop.

26.3.2 Line Sharing arrangements in service as of October 1, 2003 will be billed at the rates set forth in the Parties' Amendment to the Agreement to implement the Georgia Public Service Commission's Letter Order dated March 2, 2006 in Docket No.14361-U**.**

26.3.3 For Line Sharing arrangements placed in service between October 2, 2003, and October 1, 2004 the rates set forth in the Parties' Amendment to the Agreement to implement the Georgia Public Service Commission's Letter Order dated March 2, 2006 in Docket No.14361-U**.**

26.3.4 For Line Sharing arrangements placed on or after October 2, 2004 (whether under this Agreement only, or under this Agreement and a prior Agreement), the rates will be the full copper loop rate as set forth in the Parties' Amendment to the Agreement to implement the Georgia Public Service Commission's Letter Order dated March 2, 2006 in Docket No.14361-U.

26.3.5 As of October 2, 2006, the rates for Line Sharing arrangements shall be as set forth in Exhibit B of this Amendment.

26.3.6 The High Frequency Spectrum is defined as the frequency range above the voiceband on a copper Loop facility carrying analog circuit-switched voiceband transmissions. Access to the High Frequency Spectrum is intended to allow DPI-Teleconnect the ability to provide xDSL data services to the End User for which BellSouth provides voice services.

26.3.7 The High Frequency Spectrum shall be available for any version of xDSL complying with Spectrum Management Class *5* of ANSI TI.417**,** American National Standard for Telecommunications, Spectrum Management for Loop Transmission Systems. BellSouth will continue to have access to the low frequency portion of the Loop spectrum (from 300 Hertz to at least 3000 Hertz, and potentially up to 3400 Hertz, depending on equipment and facilities) for the purposes of providing voice service. DPI-Teleconnect shall only use xDSL technology that is within the PSD mask for Spectrum Management Class *5* as found in the abovementioned document.

26.3.8 Access to the High Frequency Spectrum requires an unloaded, 2-wire copper Loop. An unloaded Loop is a copper Loop with no load coils, lowpass filters, range extenders, DAMLs, or similar devices and minimal bridged taps consistent with ANSI T1.413 and TI .601.

26.3.9 BellSouth will provide Loop Modification to DPI-Teleconnect on an existing Loop for Line Sharing in accordance with procedures as specified in Attachment 2 of this Agreement. BellSouth is not required to modify a Loop for access to the High Frequency spectrum if modification of that Loop significantly degrades BellSouth's voice service. If DPI-Teleconnect requests that BellSouth modify a Loop and such modification significantly degrades the voice services on the Loop, DPI-Teleconnect shall pay for the Loop to be restored to its original state.

26.3.10 Line Sharing shall only be available on Loops on which BellSouth is also providing, and continues to provide, analog voice service directly to the End User. In the event the End User terminates its BellSouth provided voice service for any reason, or in the event BellSouth disconnects the End User's voice service pursuant to its tariffs or applicable law, and DPI-Teleconnect desires to continue providing xDSL service on such Loop, DPI-Teleconnect or the new voice provider, or both, shall be required to purchase a full stand-alone Loop. In those cases in which BellSouth no longer provides voice service to the End User and DPI-Teleconnect purchases the full stand-alone Loop, DPI-Teleconnect may elect the type of Loop it will purchase. DPI-Teleconnect will pay the appropriate recurring and nonrecurring rates for such Loop as set forth in the Parties'

Amendment to the Agreement to implement the Georgia Public Service Commission's Letter Order dated March 2, 2006 in Docket No.14361-U. In the event DPI-Teleconnect purchases a voice grade Loop, DPI-Teleconnect acknowledges that such Loop may not remain xDSL compatible.

26.3.11 Only one CLEC shall be permitted access to the High Frequency Spectrum of any particular Loop.

26.3.12 Provisioning of Line Sharing and Splitter Space. BellSouth will provide DPI-Teleconnect with access to the High Frequency Spectrum as follows:

26.3.12.1 To order High Frequency Spectrum on a particular Loop, DPI-Teleconnect must have a Digital Subscriber Line Access Multiplexer (DSLAM) collocated in the central office that serves the End User of such Loop.

26.3.12.2 DPI-Teleconnect may provide its own splitters or may order splitters in a central office once it has installed its DSLAM in that central office. BellSouth will install splitters within thirty-six (36) calendar days of DPI-Teleconnect's submission of an error free Line Splitter Ordering Document (LSOD) to the BellSouth Complex Resale Support Group.

26.3.12.3 Once a splitter is installed on behalf of DPI-Teleconnect in a central office in which DPI-Teleconnect is located, DPI-Teleconnect shall be entitled to order the High Frequency Spectrum on lines served out of that central office. BellSouth will bill and DPI-Teleconnect shall pay the electronic or manual ordering charges, as set forth in Exhibit A of Attachment 2 of the Agreement, as applicable when DPI-Teleconnect orders High Frequency Spectrum for End User service.

26.3.12.4 Once BellSouth has placed cross-connects on behalf of DPI-Teleconnect to provide DPI-Teleconnect access to the High Frequency Spectrum and chooses to rearrange its splitter or CLEC pairs, DPI-Teleconnect may order the rearrangement of its splitter or cable pairs via "Subsequent Activity". Subsequent Activity is any rearrangement of DPI-Teleconnect's cable pairs or splitter ports after BellSouth has placed cross-connection to provide DPI-Teleconnect access to the High Frequency Spectrum. BellSouth shall bill and DPI-Teleconnect shall pay the Subsequent Activity charges as set forth in Exhibit B of this Amendment.

26.3.13 BellSouth Provided Splitter – Line Sharing. BellSouth will select, purchase, install, and maintain a central office POTS splitter and provide DPI-Teleconnect access to data ports on the splitter. The splitter will route the High Frequency Spectrum on the circuit to DPI-Teleconnect's xDSL equipment in DPI-Teleconnect's collocation space. At least thirty (30) calendar days before making a change in splitter suppliers, BellSouth will provide DPI-Teleconnect with a carrier notification letter, informing

DPI-Teleconnect of change. DPI-Teleconnect shall purchase ports on the splitter in increments of eight (8), twenty-four (24), or ninety-six (96) ports.

26.3.14 BellSouth will install the splitter in (i) a common area close to DPI-Teleconnect's collocation area, if possible; or (ii) in a BellSouth relay rack as close to DPI-Teleconnect's DS0 termination point as possible. For purposes of this section, a common area is defined as an area in the central office in which both Parties have access to a common test access point. A Termination Point is defined as the point of termination for DPI-Teleconnect on the main distributing frame in the central office and is not the demarcation point set forth in Attachment 4 of this Agreement. BellSouth will cross-connect the splitter data ports to a specified DPI-Teleconnect DS0 at such time that a DPI-Teleconnect End User's service is established.

26.3.15 CLEC Provided Splitter – Line Sharing. DPI-Teleconnect may at its option purchase, install and maintain central office POTS splitters in its collocation arrangements. DPI-Teleconnect may use such splitters to provide xDSL services to its End Users using the High Frequency Spectrum. Existing Collocation rules and procedures and the terms and conditions relating to Collocation set forth in Attachment 4-Central Office shall apply.

26.3.16 Any splitters installed by DPI-Teleconnect in its collocation arrangement shall comply with ANSI T1.413, Annex E, or any future ANSI splitter Standards. DPI-Teleconnect may install any splitters that BellSouth deploys or permits to be deployed for itself or any BellSouth affiliate.

26.3.17 Ordering – Line Sharing. DPI-Teleconnect shall use BellSouth's LSOD to order splitters from BellSouth and to activate and deactivate DS0 Collocation Connecting Facility Assignments (CFA) for use with High Frequency Spectrum.

26.3.18 BellSouth's Local Ordering Handbook (LOH) will provide DPI-Teleconnect the LSR format to be used when ordering disconnections of the High Frequency Spectrum or Subsequent Activity.

26.3.19 BellSouth will provision High Frequency Spectrum in compliance with BellSouth's Products and Services Interval Guide available at BellSouth's Interconnection Web site.

26.3.20 BellSouth shall test the data portion of the Loop to ensure the continuity of the wiring for DPI-Teleconnect's data.

26.3.21 BellSouth will provide DPI-Teleconnect access to Preordering LMU in accordance with the terms of this Agreement. BellSouth shall bill and DPI-Teleconnect shall pay the rates for such services, as described in Exhibit B of this Amendment.

26.3.22 Maintenance and Repair - Line Sharing. DPI-Teleconnect shall have access for repair and maintenance purposes to any Loop for which it has access to the High Frequency Spectrum. DPI-Teleconnect may test from the collocation space, the Termination Point, or the NID. BellSouth will be responsible for repairing voice services and the physical line between the NID at the End User's premises and the Termination Point. DPI-Teleconnect will be responsible for repairing its data services. Each Party will be responsible for maintaining its own equipment.

26.3.23 DPI-Teleconnect shall inform its End Users to direct data problems to DPI-Teleconnect, unless both voice and data services are impaired, in which event DPI-Teleconnect should direct the End Users to contact BellSouth. Once a Party has isolated a trouble to the other Party's portion of the Loop, the Party isolating the trouble shall notify the End User that the trouble is on the other Party's portion of the Loop.

26.3.24 If DPI-Teleconnect reports a trouble on the High Frequency Spectrum of a Loop and no trouble actually exists on the BellSouth portion, or BellSouth isolates the trouble to the physical collocation arrangement belonging to DPI-Teleconnect, BellSouth will charge DPI-Teleconnect for any dispatching and testing (both inside and outside the CO) required by BellSouth in order to confirm the working status. The rates charged for no trouble found (NTF) shall be as set forth in Exhibit B of this Amendment.

271 ELEMENTS - Georgia														Attachment: 2 Exh B			
CATEGORY	RATE ELEMENTS	Interim	Zone	BCS	USOC	RATES($)					Svc Order Submitted Elec per LSR	Svc Order Submitted Manually per LSR	Incremental Charge - Manual Svc Order vs. Electronic-1st	Incremental Charge - Manual Svc Order vs. Electronic-Add'l	Incremental Charge - Manual Svc Order vs. Electronic-Disc 1st	Incremental Charge - Manual Svc Order vs. Electronic-Disc Add'l
							Nonrecurring		Nonrecurring Disconnect		OSS Rates($)					
						Rec	First	Add'l	First	Add'l	SOMEC	SOMAN	SOMAN	SOMAN	SOMAN	SOMAN
	The "Zone" shown in the sections for stand-alone loops or loops as part of a combination refers to Geographically Deaveraged UNE Zones. To view Geographically Deaveraged UNE Zone Designations by Central Office, refer to internet Website: http://www.interconnection.bellsouth.com/become_a_clec/html/interconnection.htm															
UNBUNDLED EXCHANGE ACCESS LOOP																
	4-WIRE DS1 DIGITAL LOOP															
	271 - 4-Wire DS1 Digital Loop - Zone 1		1	USL	271UC	85.97	211.72	72.42	38.20	7.19						
	271 - 4-Wire DS1 Digital Loop - Zone 2		2	USL	271UC	81.27	211.72	72.42	38.20	7.19						
	271 - 4-Wire DS1 Digital Loop - Zone 3		3	USL	271UC	128.28	211.72	72.42	38.20	7.19						
COMMINGLING																
	COMMINGLING (Loop as part of a multi-bandwidth commingling arrangement)															
	4-Wire DS1 Digital Loop - Zone 1					85.97	211.72	72.42	38.20	7.19						
	4-Wire DS1 Digital Loop - Zone 2					81.27	211.72	72.42	38.20	7.19						
	4-Wire DS1 Digital Loop - Zone 3					128.28	211.72	72.42	38.20	7.19						
LINE SHARING																
	NOTE: The Line Sharing monthly recurring rates for all installations completed on or after October 02, 2003 shall be billed as follows:															
	NOTE 2: These line sharing rates are effective Octover 2, 2006															
	LINE SHARING															
	SPLITTERS-CENTRAL OFFICE BASED															
	Line Sharing Splitter, per System 96 Line Capacity w/o test jack (E:10/2/2006)			ULS	ULSDA	117.18	243.66	0.00	90.11	0.00						
	Line Sharing Splitter, per System 24 Line Capacity w/o test jack (E:10/2/2006)			ULS	ULSDB	29.30	243.66	0.00	90.11	0.00						
	Line Sharing Splitter, Per System, 8 Line Capacity w/o test jack (E:10/2/2006)			ULS	ULSD8	9.77	243.66	0.00	90.11	0.00						
	END USER ORDERING-CENTRAL OFFICE BASED LINE SHARING															
	Line Sharing - per Line Activation (BST Owned splitter) (E:10/2/2006)			ULS	ULSDT	6.50	24.53	0.00	12.26	0.00						
	Line Sharing - per Subsequent Activity per Line Rearrangement (BST Owned Splitter) (E:10/2/2006)			ULS	ULSDS		48.91	17.86	22.87	2.28						
	Loop Modification															
	Unbundled Loop Modification -- Load Coil/Equipment Removal (E:10/2/2006)			ULS	ULM2L		29.97									
	Unbundled Loop Modification -- Bridged Tap Removal (E:10/2/2006)			ULS	ULMBT		68.11									
	MAINTENANCE															
	No Trouble Found - per 1/2 hour increments - Basic						80.00	0.00								
	No Trouble Found - per 1/2 hour increments - Overtime						120.00	0.00								
	No Trouble Found - per 1/2 hour increments - Premium						160.00	0.00								
GA 271																
	DS1 Interoffice Channel Facility Termination (271 standalone)			U1TD1	271UA	44.04	110.92	80.20	31.33	21.71						
	DS1 Interoffice Channel per mile (271 standalone)			U1TD1	1L5UB	0.1417										
	DS3 Interoffice Channel Facility Termination (271 standalone)			U1TD3	271NA	440.53	320.16	86.24	66.71	52.76						
	DS3 Interoffice Channel per mile (271 standalone)			U1TD3	1L5NB	3.11										
	DS3 Local Loop Facility Termination (271 standalone)			UE3	271NC	323.53	1,751.51	131.77	112.80	75.81						
	DS3 Local Loop per mile (271 standalone)			UE3	1L5NG	13.47										
	DS1 Interoffice Channel Facility Termination (271 part combination)			UNC1X	271UA	44.04	110.92	80.20	31.33	21.71						
	DS1 Interoffice Channel per mile (271 part in combination)			UNC1X	1L5UB	0.1417										
	DS3 Interoffice Channel Facility Termination (271 part in combination)			UNC3X	271NA	440.53	320.16	86.24	66.71	52.76						
	DS3 Interoffice Channel per mile (271 part in combination)			UNC3X	1L5NB	3.11										
	DS3/DS1 Channel System (271 part in combination)			UNC3X	271BS	157.48	0.00	0.00	0.00	0.00						
	DS3 Local Loop Facility Termination (271 part in combination)			UNC3X	271NC	323.53	1,751.51	131.77	112.80	75.81						
	DS3 Local Loop per mile (271 part in combination)			UNC3X	1L5NG	13.47										
	DS1 Local Loop in combination (271 part in combination)		1	UNC1X	271UC	85.97	209.25	70.37	37.87	6.86						
	DS1 Local Loop in combination (271 part in combination)		2	UNC1X	271UC	81.27	209.25	70.37	37.87	6.86						
	DS1 Local Loop in combination (271 part in combination)		3	UNC1X	271UC	128.28	209.25	70.37	37.87	6.86						
	DS1 COCI (271 part in combination)			UNC1X	271UK	9.50	27.30	2.90	16.85	1.04						

UNBUNDLED NETWORK ELEMENTS - Georgia														Attachment: 2 Exh A			
CATEGORY		RATE ELEMENTS	Interim	Zone	BCS	USOC	RATES($)					Svc Order Submitted Elec per LSR	Svc Order Submitted Manually per LSR	Incremental Charge - Manual Svc Order vs. Electronic-1st	Incremental Charge - Manual Svc Order vs. Electronic-Add'l	Incremental Charge - Manual Svc Order vs. Electronic-Disc 1st	Incremental Charge - Manual Svc Order vs. Electronic-Disc Add'l
								Nonrecurring		Nonrecurring Disconnect		OSS Rates($)					
							Rec	First	Add'l	First	Add'l	SOMEC	SOMAN	SOMAN	SOMAN	SOMAN	SOMAN
911 PBX LOCATE																	
	911 PBX LOCATE DATABASE CAPABILITY																
		Service Establishment per CLEC per End User Account			9PBDC	9PBEU		1,825.00									
		Changes to TN Range or Customer Profile			9PBDC	9PBTN		182.67									
		Per Telephone Number (Monthly)			9PBDC	9PBMM	0.07										
		Change Company (Service Provider) ID			9PBDC	9PBPC		536.23									
		PBX Locate Service Support per CLEC (Monthlt)			9PBDC	9PBMR	176.96										
		Service Order Charge			9PBDC	9PBSC		11.73									
	911 PBX LOCATE TRANSPORT COMPONENT																
	See Att 3																

Amendment
to the
Agreement Between
DPI-Teleconnect, LLC
and
BellSouth Telecommunications, Inc.
Dated 4/19/2003

Pursuant to this Amendment, (the "Amendment"), DPI-Teleconnect, LLC (DPI-Teleconnect), and BellSouth Telecommunications, Inc. ("BellSouth"), hereinafter referred to collectively as the "Parties", hereby agree to amend that certain Interconnection Agreement between the Parties dated 4/19/2003 ("Agreement").

WHEREAS, BellSouth and DPI-Teleconnect have entered into good faith negotiations pursuant to the Act to renegotiate an interconnection agreement ("New Agreement") to replace the existing Agreement between the Parties, which expired on 4/18/2006; and

WHEREAS, the Parties desire to extend the term of the Agreement; and

WHEREAS, on October 20, 2006, the Mississippi Public Service Commission ("Commission") issued its Order in Docket No. 2005-AD-139 ("Order"), Order Establishing Generic Change Of Law to Existing Interconnection Agreements; and

WHEREAS, the Parties are obligated to amend the Agreement to bring it in compliance with the Commission's Order;

NOW, THEREFORE, in consideration of the mutual provisions contained herein and other good and valuable consideration, the receipt and sufficiency of which are hereby acknowledged, the Parties hereby covenant and agree as follows:

1. The Parties hereby agree to extend the term of the Agreement by ninety (90) days following the date of the last signature of this Amendment. Other than the modification of the expiration date as described in this Amendment, all provisions in Section 2 of the General Terms and Conditions of the Agreement relating to the term and termination of the Agreement remain in full force and effect.

2. The Parties hereby agree to incorporate into the Agreement the contract provisions set forth in Exhibit A hereto, and such contract provisions shall apply to services provided in the state of Mississippi only.

3. The Parties hereby agree to incorporate into the Agreement the rates set forth in Exhibit B hereto, and such rates shall apply to services provided in the state of Mississippi only.

4. To the extent that such contract provisions or rates as set forth in Exhibits A and B hereto conflict with any other rates, terms and conditions in the Agreement, the contract provisions and rates in Exhibits A and B shall prevail in the state of Mississippi.

5. The Parties hereby agree to delete the following rates from Attachment 2, Exhibit A of the Agreement:

   8XX Access Ten Digit Screening
   Line Information Data Base (LIDB) Access
   Calling Name (CNAM) Service
   Unbundled Local Switching
   Unbundled Port/loop Combinations
   Selective Routing
   AIN Selective Carrier Routing
   AIN – BellSouth AIN SIMS Access Service

6. The Parties also hereby agree to delete the following provisions and associated rates from Attachment 7 of the Agreement:

   Optional Daily Usage File (ODUF);
   Access Daily Usage File (ADUF);
   Enhanced Optional Daily Usage File (EODUF) in their entirety

7. Further, to the extent that defined terms in this Amendment differ from defined terms in the Agreement, such defined terms in the Agreement shall be deemed to have the same meaning as the alternative defined terms in this Amendment to the extent necessary to give full effect to this Amendment consistent with the Mississippi Public Service Commission's Orders.

8. This Amendment shall be shall be deemed effective on March 11, 2006 ("Effective Date").

9. All of the other provisions of the Agreement shall remain in full force and effect.

10. Either or both of the Parties are authorized to submit this Amendment to the respective state regulatory authorities for approval subject to Section 252(e) of the Federal Telecommunications Act of 1996.

IN WITNESS WHEREOF, the Parties have executed this Amendment the day and year written below.

BellSouth Telecommunications, Inc.	**DPI-Teleconnect, LLC**
By: Kristen E. Shore	By: David B. Dornant
Name: Kristen E. Shore	Name: DAVID B. DORNANT
Title: Director	Title: PRESIDENT + CEO
Date: 11/16/06	Date: 11/14/06

Version: MS COL Amendment
11/01/06

ACCESS TO NETWORK ELEMENTS AND OTHER SERVICES

1 Introduction

1.1 This Attachment sets forth rates, terms and conditions for unbundled network elements (Network Elements) and combinations of Network Elements (Combinations) that BellSouth offers to DPI-Teleconnect for DPI-Teleconnect's provision of Telecommunications Services in accordance with its obligations under Section 251(c)(3) of the Act. Additionally, this Attachment sets forth the rates, terms and conditions for other facilities and services BellSouth makes available to DPI-Teleconnect (Other Services). Additionally, the provision of a particular Network Element or Other Service may require DPI-Teleconnect to purchase other Network Elements or services. In the event of a conflict between this Attachment and any other section or provision of this Agreement, the provisions of this Attachment shall control.

1.2 DPI-Teleconnect shall not obtain a Network Element for the exclusive provision of mobile wireless services or interexchange services.

1.3 Conversion of Wholesale Services to Network Elements or Network Elements to Wholesale Services. Upon request, BellSouth shall convert a wholesale service, or group of wholesale services, to the equivalent Network Element or Combination that is available to DPI-Teleconnect pursuant to Section 251 of the Act and under this Agreement or convert a Network Element or Combination that is available to DPI-Teleconnect pursuant to Section 251 of the Act and under this Agreement to an equivalent wholesale service or group of wholesale services offered by BellSouth (collectively "Conversion"). BellSouth shall charge the applicable nonrecurring switch-as-is rates for Conversions to specific Network Elements or Combinations found in Exhibit B to this Amendment. BellSouth shall also charge the same nonrecurring switch-as-is rates when converting from Network Elements or Combinations. Any rate change resulting from the Conversion will be effective as of the next billing cycle following BellSouth's receipt of a complete and accurate Conversion request from DPI-Teleconnect. A Conversion shall be considered termination for purposes of any volume and/or term commitments and/or grandfathered status between DPI-Teleconnect and BellSouth. Any change from a wholesale service/group of wholesale services to a Network Element/Combination, or from a Network Element/Combination to a wholesale service/group of wholesale services, that requires a physical rearrangement will not be considered to be a Conversion for purposes of this Agreement. BellSouth will not require physical rearrangements if the Conversion can be completed through record changes only. Orders for Conversions will be handled in accordance with the guidelines set forth in the Ordering Guidelines and Processes and CLEC Information Packages as referenced in Section 1.8 below.

1.4 Except to the extent expressly provided otherwise in this Attachment, DPI-Teleconnect may not maintain unbundled network elements or combinations of unbundled network elements, that are no longer offered pursuant to this Agreement (collectively "Arrangements"). In the event BellSouth determines that DPI-Teleconnect has in place any Arrangements after the Effective Date of this Agreement, BellSouth will provide DPI-Teleconnect with thirty (30) days written notice to disconnect or convert such Arrangements. If DPI-Teleconnect fails to submit orders to disconnect or convert such Arrangements within such thirty (30) day period, BellSouth will transition such circuits to the equivalent tariffed BellSouth service(s). Those circuits identified and transitioned by BellSouth pursuant to this Section 1.4 shall be subject to all applicable disconnect charges as set forth in this Agreement and the full nonrecurring charges for installation of the equivalent tariffed BellSouth service as set forth in BellSouth's tariffs. The applicable recurring tariff charge shall apply to each circuit as of the Effective Date of this Agreement.

1.5 Prior to submitting an order pursuant to this Agreement for high capacity (DS1 or above) Dedicated Transport or high capacity Loops, DPI-Teleconnect shall undertake a reasonably diligent inquiry to determine whether DPI-Teleconnect is entitled to unbundled access to such Network Elements in accordance with the terms of this Agreement. By submitting any such order, DPI-Teleconnect self-certifies that to the best of DPI-Teleconnect's knowledge, the high capacity Dedicated Transport or high capacity Loop requested is available as a Network Element pursuant to this Agreement. Upon receiving such order, BellSouth shall process the request in reliance upon DPI-Teleconnect's self-certification. To the extent BellSouth believes that such request does not comply with the terms of this Agreement, BellSouth shall seek dispute resolution in accordance with the General Terms and Conditions of this Agreement. In the event such dispute is resolved in BellSouth's favor, BellSouth shall bill DPI-Teleconnect the difference between the rates for such circuits pursuant to this Agreement and the applicable nonrecurring and recurring charges for the equivalent tariffed service from the date of installation to the date the circuit is transitioned to the equivalent tariffed service. Within thirty (30) days following a decision finding in BellSouth's favor, DPI-Teleconnect shall submit a spreadsheet identifying those non-compliant circuits to be transitioned to tariffed services or disconnected.

1.5.1 In the event that (1) BellSouth designates a wire center as non-impaired, (2) CLEC converts existing UNEs to other services or orders new services as services other than UNEs, (3) CLEC otherwise would have been entitled to UNEs in such wire center at the time alternative services were provisioned, and (4) BellSouth acknowledges or a state or federal regulatory body with authority determines that, at the time BellSouth designated such wire center as non-impaired, such wire center did not meet the FCC's non-impairment criteria, then upon request of CLEC, BellSouth shall transition to UNEs any alternative services in such wire center that were established after such wire center was designated as non-

impaired. In such instances, BellSouth shall refund CLEC the difference between the rate paid by CLEC for such services and the applicable UNE rate, including but not limited to any charges associated with the unnecessary conversion from UNE to other wholesale services.

1.6 BellSouth will perform Routine Network Modifications (RNM) in accordance with FCC 47 C.F.R. § 51.319 (a)(7) and (e)(4) for Loops and Dedicated Transport provided under this Attachment. If BellSouth has anticipated such RNM and performs them during normal operations and has recovered the costs for performing such modifications through the rates set forth in Exhibit A, then BellSouth shall perform such RNM at no additional charge. RNM shall be performed within the intervals established for the Network Element and subject to the performance measurements and associated remedies set forth in Attachment 9 of this Agreement to the extent such RNM were anticipated in the setting of such intervals. If BellSouth has not anticipated a requested network modification as being a RNM and has not recovered the costs of such RNM in the rates set forth in Exhibit A, then such request will be handled as a project on an individual case basis. BellSouth will provide a price quote for the request and, upon receipt of payment from DPI-Teleconnect, BellSouth shall perform the RNM.

1.7 <u>Commingling of Services</u>

1.7.1 Commingling means the connecting, attaching, or otherwise linking of a Network Element, or a Combination, to one or more Telecommunications Services or facilities that DPI-Teleconnect has obtained at wholesale from BellSouth, or the combining of a Network Element or Combination with one or more such wholesale Telecommunications Services or facilities. DPI-Teleconnect must comply with all rates, terms or conditions applicable to such wholesale Telecommunications Services or facilities.

1.7.2 Subject to the limitations set forth elsewhere in this Attachment, BellSouth shall not deny access to a Network Element or a Combination on the grounds that one or more of the elements: (1) is connected to, attached to, linked to, or combined with such a facility or service obtained from BellSouth; or (2) shares part of BellSouth's network with access services or inputs for mobile wireless services and/or interexchange services.

1.7.3 Unless otherwise agreed to by the Parties, the Network Element portion of a commingled circuit will be billed at the rates set forth in Exhibit A to Attachment 2 of the Agreement and the remainder of the circuit or service will be billed in accordance with BellSouth's tariffed rates or rates set forth in a separate agreement between the Parties.

1.7.4 When multiplexing equipment is attached to a commingled circuit, the multiplexing equipment will be billed from the same agreement or tariff as the higher bandwidth

circuit. Central Office Channel Interfaces (COCI) will be billed from the same agreement or tariff as the lower bandwidth circuit.

1.7.5 Notwithstanding any other provision of this Agreement, BellSouth shall not be obligated to commingle or combine Network Elements or Combinations with any service, network element or other offering that it is obligated to make available only pursuant to Section 271 of the Act.

1.8 Ordering Guidelines and Processes

1.8.1 For information regarding Ordering Guidelines and Processes for various Network Elements, Combinations and Other Services, DPI-Teleconnect should refer to the "Guides" section of the BellSouth Interconnection Web site.

1.8.2 Additional information may also be found in the individual CLEC Information Packages located at the "CLEC UNE Products" on BellSouth's Interconnection Web site at: www.interconnection.bellsouth.com/guides/html/unes.html.

1.8.3 The provisioning of Network Elements, Combinations and Other Services to DPI-Teleconnect's Collocation Space will require cross-connections within the central office to connect the Network Element, Combinations or Other Services to the demarcation point associated with DPI-Teleconnect's Collocation Space. These cross-connects are separate components that are not considered a part of the Network Element, Combinations or Other Services and, thus, have a separate charge pursuant to this Agreement.

2 Loops

2.1 General. The local loop Network Element is defined as a transmission facility that BellSouth provides pursuant to this Attachment between a distribution frame (or its equivalent) in BellSouth's central office and the loop demarcation point at an End User premises (Loop). Facilities that do not terminate at a demarcation point at an End User premises, including, by way of example, but not limited to, facilities that terminate to another carrier's switch or premises, a cell site, Mobile Switching Center or base station, do not constitute local Loops under Section 251, except to the extent that CLEC may require Loops to such locations for the purpose of providing telecommunications services to its personnel at those locations. The Loop Network Element includes all features, functions, and capabilities of the transmission facilities, including the network interface device, and attached electronics (except those used for the provision of advanced services, such as Digital Subscriber Line Access Multiplexers (DSLAMs)), optronics and intermediate devices (including repeaters and load coils) used to establish the transmission path to the End User's premises, including inside wire owned or controlled by BellSouth. DPI-Teleconnect shall purchase the entire bandwidth of

the Loop and, except as required herein or as otherwise agreed to by the Parties, BellSouth shall not subdivide the frequency of the Loop.

2.1.1 The Loop does not include any packet switched features, functions or capabilities.

2.1.2 Fiber to the Home (FTTH) loops are local loops consisting entirely of fiber optic cable, whether dark or lit, serving an End User's premises or, in the case of predominantly residential multiple dwelling units (MDUs), a fiber optic cable, whether dark or lit, that extends to the MDU minimum point of entry (MPOE). Fiber to the Curb (FTTC) loops are local loops consisting of fiber optic cable connecting to a copper distribution plant that is not more than five hundred (500) feet from the End User's premises or, in the case of predominantly residential MDUs, not more than five hundred (500) feet from the MDU's MPOE. The fiber optic cable in a FTTC loop must connect to a copper distribution plant at a serving area interface from which every other copper distribution subloop also is not more than five hundred (500) feet from the respective End User's premises.

2.1.2.1 In new build (Greenfield) areas, where BellSouth has only deployed FTTH/FTTC facilities, BellSouth is under no obligation to provide Loops. FTTH facilities include fiber loops deployed to the MPOE of a MDU that is predominantly residential regardless of the ownership of the inside wiring from the MPOE to each End User in the MDU.

2.1.2.2 In FTTH/FTTC overbuild situations where BellSouth also has copper Loops, BellSouth will make those copper Loops available to DPI-Teleconnect on an unbundled basis, until such time as BellSouth chooses to retire those copper Loops using the FCC's network disclosure requirements. In these cases, BellSouth will offer a sixty-four (64) kilobits per second (kbps) voice grade channel over its FTTH/FTTC facilities.

2.1.2.3 Furthermore, in FTTH/FTTC overbuild areas where BellSouth has not yet retired copper facilities, BellSouth is not obligated to ensure that such copper Loops in that area are capable of transmitting signals prior to receiving a request for access to such Loops by DPI-Teleconnect. If a request is received by BellSouth for a copper Loop, and the copper facilities have not yet been retired, BellSouth will restore the copper Loop to serviceable condition if technically feasible. In these instances of Loop orders in an FTTH/FTTC overbuild area, BellSouth's standard Loop provisioning interval will not apply, and the order will be handled on a project basis by which the Parties will negotiate the applicable provisioning interval

2.1.3 A hybrid Loop is a local Loop, composed of both fiber optic cable, usually in the feeder plant, and copper twisted wire or cable, usually in the distribution plant. BellSouth shall provide DPI-Teleconnect with nondiscriminatory access to the time division multiplexing features, functions and capabilities of such hybrid Loop,

on an unbundled basis to establish a complete transmission path between BellSouth's central office and an End User's premises.

2.1.4 Transition for DS1 and DS3 Loops

2.1.4.1 For purposes of this Section 2.1.4, the Transition Period for the Embedded Base of DS1 and DS3 Loops and for the Excess DS1 and DS3 Loops (defined in 2.1.4.3) is the twelve (12) month period beginning March 11, 2005 and ending March 10, 2006.

2.1.4.2 For purposes of this Section 2.1.4, Embedded Base means DS1 and DS3 Loops that were in service for DPI-Teleconnect as of March 10, 2005 in those wire centers that, as of such date, met the criteria set forth in Sections 2.1.4.5.1 or 2.1.4.5.2 below. Subsequent disconnects or loss of End Users shall be removed from the Embedded Base.

2.1.4.3 Excess DS1 and DS3 Loops are those DPI-Teleconnect DS1 and DS3 Loops in service as of March 10, 2005, in excess of the caps set forth in Sections 2.1.4.5.1 and 2.1.4.5.2 below, respectively. Subsequent disconnects or loss of End Users shall be removed from Excess DS1 and DS3 Loops.

2.1.4.4 For purposes of this Section 2.1.4, a Business Line is defined in 47 C.F.R. § 51.5.

2.1.4.5 Notwithstanding anything to the contrary in this Agreement, and except as set forth in Section 2.1.4.12 below, BellSouth shall make available DS1 and DS3 Loops as described in this Section 2.1.4 only for DPI-Teleconnect's Embedded Base and Excess DS1 and DS3 loops during the Transition Period:

2.1.4.5.1 DS1 Loops at any location within the service area of a wire center containing 60,000 or more Business Lines and four (4) or more fiber-based collocators.

2.1.4.5.2 DS3 Loops at any location within the service area of a wire center containing 38,000 or more Business Lines and four (4) or more fiber-based collocators.

2.1.4.6 A list of wire centers meeting the criteria set forth in Sections 2.1.4.5.1 and 2.1.4.5.2 above as of March 10, 2005, as approved by the Mississippi Public Service Commission in Docket No. 2005-AD-139, is available on BellSouth's Master List of Unimpaired Wire Centers as Approved by State Commissions in its Region (Master List of Unimpaired Wire Centers), which is located on BellSouth's Interconnection Services Web site.

2.1.4.7 Notwithstanding the Effective Date of this Agreement, during the Transition Period, the rates for DPI-Teleconnect's Embedded Base of DS1 and DS3 Loops and DPI-Teleconnect's Excess DS1 and DS3 Loops described in this Section 2.1.4 shall be equal to the higher of:

2.1.4.7.1 115% of the rate paid for the element on June 15, 2004; or

2.1.4.7.2 115% of a new rate the Commission establishes, if any, between June 16, 2004 and March 11, 2005.

2.1.4.7.3 These rates shall be as set forth in Exhibit A to Attachment 2 of the Agreement and this Section 2.1.4.7.

2.1.4.8 The Transition Period shall apply only to (1) DPI-Teleconnect's Embedded Base and (2) DPI-Teleconnect's Excess DS1 and DS3 Loops. DPI-Teleconnect shall not add new DS1 or DS3 loops as described in this Section 2.1.4 pursuant to this Agreement, except pursuant to the self-certification process as set forth in Section 1.5 of this Attachment and as set forth in Section 2.1.4.12 below.

2.1.4.9 Once a wire center exceeds both of the thresholds set forth in Section 2.1.4.5.1 above, no future DS1 Loop unbundling will be required in that wire center.

2.1.4.10 Once a wire center exceeds both of the thresholds set forth in Section 2.1.4.5.2 above, no future DS3 Loop unbundling will be required in that wire center.

2.1.4.11 No later than December 9, 2005 DPI-Teleconnect shall submit spreadsheet(s) identifying all of the Embedded Base of circuits and Excess DS1 and DS3 Loops to be either disconnected or converted to other BellSouth services pursuant to Section 1.3 above. The Parties shall negotiate a project schedule for the Conversion of the Embedded Base and Excess DS1 and DS3 Loops.

2.1.4.11.1 If DPI-Teleconnect fails to submit the spreadsheet(s) specified in Section 2.1.4.11 above for all of its Embedded Base and Excess DS1 and DS3 Loops prior to December 9, 2005, BellSouth will identify DPI-Teleconnect's remaining Embedded Base and Excess DS1 and DS3 Loops, if any, and will transition such circuits to the equivalent tariffed BellSouth service(s). Those circuits identified and transitioned by BellSouth pursuant to this Section 2.1.4.11.1 shall be subject to all applicable disconnect charges as set forth in this Agreement and the full nonrecurring charges for installation of the equivalent tariffed BellSouth service as set forth in BellSouth's tariffs.

2.1.4.11.2 For Embedded Base circuits and Excess DS1 and DS3 Loops converted pursuant to Section 2.1.4.11 above or transitioned pursuant to Section 2.1.4.11.1 above, the applicable recurring tariff charge shall apply to each circuit as of the earlier of the date each circuit is converted or transitioned, as applicable, or March 11, 2006.

2.1.4.12 <u>Modifications and Updates to the Wire Center List and Subsequent Transition Periods</u>

2.1.4.12.1 In the event BellSouth identifies additional wire centers that meet the criteria set forth in Section 2.1.4.5 above, but that were not included in the Initial Wire Center

List, BellSouth shall include such additional wire centers in a carrier notification letter (CNL). Each such list of additional wire centers shall be considered a "Subsequent Wire Center List".

2.1.4.12.2 Effective ten (10) business days after the date of a BellSouth CNL providing a Subsequent Wire Center List, BellSouth shall not be required to unbundle DS1 and/or DS3 Loops, as applicable, in such additional wire center(s), except pursuant to the self-certification process as set forth in Section 1.5 of this Attachment.

2.1.4.12.3 For purposes of Section 2.1.4.12 above, BellSouth shall make available DS1 and DS3 Loops that were in service for DPI-Teleconnect in a wire center on the Subsequent Wire Center List as of the tenth (10th) business day after the date of BellSouth's CNL identifying the Subsequent Wire Center List (Subsequent Embedded Base) until ninety (90) days after the tenth (10th) business day from the date of BellSouth's CNL identifying the Subsequent Wire Center List (Subsequent Transition Period).

2.1.4.12.4 Subsequent disconnects or loss of End Users shall be removed from the Subsequent Embedded Base.

2.1.4.12.5 The rates that shall apply to the Subsequent Embedded Base during the Subsequent Transition Period shall equal the rate paid for that element at the time of BellSouth's posting of the CNL, plus 15%.

2.1.4.12.6 No later than forty (40) days from BellSouth's CNL identifying the Subsequent Wire Center List, DPI-Teleconnect shall submit a spreadsheet(s) identifying the Subsequent Embedded Base of circuits to be disconnected or converted to other BellSouth services. The Parties shall negotiate a project schedule for the Conversion of the Subsequent Embedded Base.

2.1.4.12.6.1 If DPI-Teleconnect fails to submit the spreadsheet(s) specified in Section 2.1.4.12.6 above for all of its Subsequent Embedded Base within forty (40) days after the date of BellSouth's CNL identifying the Subsequent Wire Center List, BellSouth will identify DPI-Teleconnect's remaining Subsequent Embedded Base, if any, and will transition such circuits to the equivalent tariffed BellSouth service(s). Those circuits identified and transitioned by BellSouth shall be subject to the applicable disconnect charges as set forth in this Agreement and the full nonrecurring charges for installation of the equivalent tariffed BellSouth service as set forth in BellSouth's tariffs.

2.1.4.12.6.2 For Subsequent Embedded Base circuits converted pursuant to Section 2.1.4.12.6 above or transitioned pursuant to Section 2.1.4.12.6.1 above, the applicable recurring tariff charges shall apply as of the earlier of the date each circuit is converted or transitioned, as applicable, or the first day after the end of the Subsequent Transition Period.

2.2 Unbundled Digital Loops

2.2.1 BellSouth will offer UDLs. UDLs are service specific, will be designed, will be provisioned with test points (where appropriate), and will come standard with OC and a DLR. The various UDLs are intended to support a specific digital transmission scheme or service.

2.2.2 BellSouth shall make available the following UDLs, subject to restrictions set forth herein:

2.2.2.1 2-wire Unbundled ISDN Digital Loop;

2.2.2.2 2-wire Unbundled ADSL Compatible Loop;

2.2.2.3 2-wire Unbundled HDSL Compatible Loop;

2.2.2.4 4-wire Unbundled HDSL Compatible Loop;

2.2.2.5 4-wire Unbundled DS1 Digital Loop;

2.2.2.6 4-wire Unbundled Digital Loop/DS0 – 64 kbps, 56 kbps and below;

2.2.2.7 DS3 Loop; or

2.2.2.8 STS-1 Loop.

2.2.3 2-wire Unbundled ISDN Digital Loops. These will be provisioned according to industry standards for 2-Wire Basic Rate ISDN services and will come standard with a test point, OC, and a DLR. DPI-Teleconnect will be responsible for providing BellSouth with a Service Profile Identifier (SPID) associated with a particular ISDN-capable Loop and End User. With the SPID, BellSouth will be able to adequately test the circuit and ensure that it properly supports ISDN service.

2.2.4 2-wire ADSL-Compatible Loop. This is a designed Loop that is provisioned according to Revised Resistance Design (RRD) criteria and may be up to 18,000 feet long and may have up to 6,000 feet of bridged tap (inclusive of Loop length). The Loop is a 2-wire circuit and will come standard with a test point, OC, and a DLR.

2.2.5 2-wire or 4-wire HDSL-Compatible Loop. This is a designed Loop that meets Carrier Serving Area (CSA) specifications, may be up to 12,000 feet long and may have up to 2,500 feet of bridged tap (inclusive of Loop length). It may be a 2-wire or 4-wire circuit and will come standard with a test point, OC, and a DLR.

2.2.6 4-wire Unbundled DS1 Digital Loop.

2.2.6.1 This is a designed 4-wire Loop that is provisioned according to industry standards for DS1 or Primary Rate ISDN services and will come standard with a test point, OC, and a DLR. A DS1 Loop may be provisioned over a variety of loop transmission technologies including copper, HDSL-based technology or fiber optic transport systems. It will include a 4-wire DS1 Network Interface at the End User's location. For purposes of this Agreement, including the transition of DS1 and DS3 Loops described in Section 2.1.4 above, DS1 Loops include 2-wire and 4-wire copper Loops capable of providing high-bit rate digital subscriber line services, such as 2-wire and 4-wire HDSL Compatible Loops.

2.2.6.2 BellSouth shall not provide more than ten (10) unbundled DS1 Loops to DPI-Teleconnect at any single building in which DS1 Loops are available as unbundled Loops.

2.2.7 4-wire Unbundled Digital/DS0 Loop. These are designed 4-wire Loops that may be configured as sixty-four (64)kbps, fifty-six (56)kbps, nineteen (19)kbps, and other sub-rate speeds associated with digital data services and will come standard with a test point, OC, and a DLR.

2.2.8 DS3 Loop. DS3 Loop is a two-point digital transmission path which provides for simultaneous two-way transmission of serial, bipolar, return-to-zero isochronous digital electrical signals at a transmission rate of forty-four point seven thirty-six (44.736) megabits per second (Mbps) that is dedicated to the use of the ordering CLEC in its provisioning of local exchange and associated exchange access services. It may provide transport for twenty-eight (28) DS1 channels, each of which provides the digital equivalent of twenty-four (24) analog voice grade channels. The interface to unbundled dedicated DS3 transport is a metallic-based electrical interface.

2.2.9 STS-1 Loop. STS-1 Loop is a high-capacity digital transmission path with SONET VT1.5 mapping that is dedicated for the use of the ordering customer for the purpose of provisioning local exchange and associated exchange access services. It is a two-point digital transmission path which provides for simultaneous two-way transmission of serial bipolar return-to-zero synchronous digital electrical signals at a transmission rate of fifty-one point eighty-four (51.84) Mbps. It may provide transport for twenty-eight (28) DS1 channels, each of which provides the digital equivalent of twenty-four (24) analog voice grade channels. The interface to unbundled dedicated STS-1 transport is a metallic-based electrical interface.

2.2.10 Both DS3 Loop and STS-1 Loop require a SI in order to ascertain availability.

2.2.11 DS3 services come with a test point and a DLR. Mileage is airline miles, rounded up and a minimum of one (1) mile applies. BellSouth's TR73501 LightGate®Service Interface and Performance Specifications, Issue D, June 1995 applies to DS3 services.

2.2.12 DPI-Teleconnect may obtain a maximum of a single Unbundled DS3 Loop to any single building in which DS3 Loops are available as Unbundled Loops.

2.3 Unbundled Loop Modifications (Line Conditioning)

2.3.1 Line Conditioning is defined as routine network modification that BellSouth regularly undertakes to provide xDSL services to its own customers. This may include the removal of any device, from a copper Loop or copper Subloop that may diminish the capability of the Loop or Subloop to deliver high-speed switched wireline telecommunications capability, including xDSL service. Such devices include, load coils, excessive bridged taps, low pass filters, and range extenders. Excessive bridged taps are bridged taps that serves no network design purpose and that are beyond the limits set according to industry standards and/or the BellSouth's TR73600 Unbundled Local Loop Technical Specification.

2.3.2 BellSouth will remove load coils only on copper Loops and Subloops that are less than eighteen thousand (18,000) feet in length.

2.3.3 For any copper loop being ordered by DPI-Teleconnect which has over six thousand (6,000) feet of combined bridged tap will be modified, upon request from DPI-Teleconnect, so that the loop will have a maximum of six thousand (6,000) feet of bridged tap. This modification will be performed at no additional charge to DPI-Teleconnect. Loop conditioning orders that require the removal of bridged tap that serves no network design purpose on a copper Loop that will result in a combined total of bridged tap between two thousand five hundred (2,500) and six thousand (6,000) feet will be performed at the rates set forth in Exhibit A to Attachment 2 of the Agreement.

2.3.4 DPI-Teleconnect may request removal of any unnecessary and non-excessive bridged tap (bridged tap between zero (0) and two thousand five hundred (2,500) feet which serves no network design purpose), at rates pursuant to BellSouth's SC Process as mutually agreed to by the Parties.

2.3.5 Rates for ULM are as set forth in Exhibit A to Attachment 2 of the Agreement.

2.3.6 BellSouth will not modify a Loop in such a way that it no longer meets the technical parameters of the original Loop type (e.g., voice grade, ADSL, etc.) being ordered.

2.3.7 If DPI-Teleconnect requests ULM on a reserved facility for a new Loop order, BellSouth may perform a pair change and provision a different Loop facility in lieu of the reserved facility with ULM if feasible. The Loop provisioned will meet or exceed specifications of the requested Loop facility as modified. DPI-Teleconnect will not be charged for ULM if a different Loop is provisioned. For Loops that require a DLR or its equivalent, BellSouth will provide LMU detail of the Loop provisioned.

2.3.8 DPI-Teleconnect shall request Loop make up information pursuant to this Attachment prior to submitting a service inquiry and/or a LSR for the Loop type that DPI-Teleconnect desires BellSouth to condition.

2.3.9 When requesting ULM for a Loop that BellSouth has previously provisioned for DPI-Teleconnect, DPI-Teleconnect will submit a SI to BellSouth. If a spare Loop facility that meets the Loop modification specifications requested by DPI-Teleconnect is available at the location for which the ULM was requested, DPI-Teleconnect will have the option to change the Loop facility to the qualifying spare facility rather than to provide ULM. In the event that BellSouth changes the Loop facility in lieu of providing ULM, DPI-Teleconnect will not be charged for ULM but will only be charged the service order charges for submitting an order.

2.4 Dark Fiber Loop

2.4.1 Dark Fiber Loop is an unused optical transmission facility, without attached signal regeneration, multiplexing, aggregation or other electronics, from the demarcation point at an End User's premises to the End User's serving wire center. Dark Fiber Loops may be strands of optical fiber existing in aerial or underground structure. BellSouth will not provide line terminating elements, regeneration or other electronics necessary for DPI-Teleconnect to utilize Dark Fiber Loops.

2.4.2 Transition for Dark Fiber Loop

2.4.2.1 For purposes of this Section 2.4.2, the Transition Period for Dark Fiber Loops is the eighteen (18) month period beginning March 11, 2005 and ending September 10, 2006.

2.4.2.2 For purposes of this Section 2.4.2, Embedded Base means Dark Fiber Loops that were in service for DPI-Teleconnect as of March 10, 2005. Subsequent disconnects or loss of End Users shall be removed from the Embedded Base.

2.4.3 During the Transition Period only, BellSouth shall make available for the Embedded Base Dark Fiber Loops for DPI-Teleconnect at the terms and conditions set forth in this Attachment.

2.4.4 Notwithstanding the Effective Date of this Agreement, the rates for DPI-Teleconnect's Embedded Base of Dark Fiber Loops during the Transition Period shall be equal to the higher of:

2.4.4.1 115% of the rate paid for the element on June 15, 2004; or

2.4.4.2 115% of a new rate the Commission established, if any, between June 16, 2004 and March 11, 2005.

2.4.4.3 These rates shall be as set forth in Exhibit A to Attachment 2 of the Agreement and this Section 2.4.4.

2.4.5 The Transition Period shall apply only to DPI-Teleconnect's Embedded Base and DPI-Teleconnect shall not add new Dark Fiber Loops pursuant to this Agreement.

2.4.6 Effective September 11, 2006, Dark Fiber Loops will no longer be made available pursuant to this Agreement.

2.4.7 No later than June 10, 2006 DPI-Teleconnect shall submit spreadsheet(s) identifying all of the Embedded Base of circuits to be either disconnected or converted to other BellSouth services as Conversions pursuant to Section 1.3 above. The Parties shall negotiate a project schedule for the Conversion of the Embedded Base.

2.4.7.1 If DPI-Teleconnect fails to submit the spreadsheet(s) specified in Section 2.4.7 above for all of its Embedded Base prior to June 10, 2006, BellSouth will identify DPI-Teleconnect's remaining Embedded Base, if any, and will transition such circuits to the equivalent tariffed BellSouth service(s). Those circuits identified and transitioned by BellSouth pursuant to this Section 2.4.7.1 shall be subject to all applicable disconnect charges as set forth in this Agreement and the full nonrecurring charges for installation of the equivalent tariffed BellSouth service as set forth in BellSouth's tariffs.

2.4.7.2 For Embedded Base circuits converted pursuant to Section 2.4.7 above or transitioned pursuant to Section 2.4.7.1 above, the applicable recurring tariff charge shall apply to each circuit as of the earlier of the date each circuit is converted or transitioned, as applicable, or September 11, 2006.

3 Line Splitting

3.1 Line splitting shall mean that a provider of data services (a Data LEC) and a provider of voice services (a Voice CLEC) to deliver voice and data service to End Users over the same Loop. The Voice CLEC and Data LEC may be the same or different carriers.

3.2 Line Splitting – UNE-L. In the event DPI-Teleconnect provides its own switching or obtains switching from a third party, DPI-Teleconnect may engage in line splitting arrangements with another CLEC using a splitter, provided by DPI-Teleconnect, in a Collocation Space at the central office where the loop terminates into a distribution frame or its equivalent.

3.3 Provisioning Line Splitting and Splitter Space – UNE-L

3.3.1 The Voice CLEC provides the splitter when providing Line Splitting with UNE-L. When DPI-Teleconnect owns the splitter, Line Splitting requires the following: a loop from NID at the End User's location to the serving wire center and terminating into a distribution frame or its equivalent.

3.4 CLEC Provided Splitter – Line Splitting – UNE-L

3.4.1 To order High Frequency Spectrum on a particular Loop, DPI-Teleconnect must have a DSLAM collocated in the central office that serves the End User of such Loop.

3.4.2 DPI-Teleconnect may purchase, install and maintain central office POTS splitters in its collocation arrangements. DPI-Teleconnect may use such splitters for access to its customers and to provide digital line subscriber services to its customers using the High Frequency Spectrum. Existing Collocation rules and procedures and the terms and conditions relating to Collocation set forth in Attachment 4-Central Office shall apply.

3.4.3 Any splitters installed by DPI-Teleconnect in its collocation arrangement shall comply with ANSI T1.413, Annex E, or any future ANSI splitter Standards. DPI-Teleconnect may install any splitters that BellSouth deploys or permits to be deployed for itself or any BellSouth affiliate.

3.5 Maintenance – Line Splitting – UNE-L

3.5.1 BellSouth will be responsible for repairing voice troubles and the troubles with the physical loop between the NID at the End User's premises and the termination point.

3.5.2 DPI-Teleconnect shall indemnify, defend and hold harmless BellSouth from and against any claims, losses, actions, causes of action, suits, demands, damages, injury, and costs including reasonable attorney fees, which arise out of actions related to the other service provider, except to the extent caused by BellSouth's gross negligence or willful misconduct.

4 Unbundled Network Element Combinations

4.1 EELs Audits

4.1.1 BellSouth may, on an annual basis, audit DPI-Teleconnect's records in order to verify compliance with the qualifying service eligibility criteria. The audit shall be conducted by a third party independent auditor, and the audit must be performed in accordance with the standards established by the American Institute for Certified Public Accountants (AICPA). To the extent the independent auditor's report concludes that DPI-Teleconnect failed to comply with the service eligibility criteria, DPI-Teleconnect must true-up any difference in payments, convert all noncompliant circuits to the appropriate service, and make the correct payments on a going-forward basis. In the event the auditor's report concludes that DPI-Teleconnect did not comply in any material respect with the service eligibility criteria, DPI-Teleconnect shall reimburse BellSouth for the cost of the independent auditor. To the extent the auditor's report concludes that DPI-Teleconnect did comply in all material respects with the service eligibility criteria, BellSouth will reimburse DPI-Teleconnect for its reasonable and demonstrable costs associated with the audit. DPI-Teleconnect will maintain appropriate documentation to support its certifications.

4.1.2 In the event DPI-Teleconnect converts special access services to UNEs, DPI-Teleconnect shall be subject to the termination liability provisions in the applicable special access tariffs, if any.

5 Dedicated Transport and Dark Fiber Transport

5.1 Dedicated Transport. Dedicated Transport is defined as BellSouth's transmission facilities between wire centers or switches owned by BellSouth, or between wire centers or switches owned by BellSouth and switches owned by DPI-Teleconnect, including but not limited to DS1, DS3 and OCn level services, as well as dark fiber, dedicated to DPI-Teleconnect. BellSouth shall not be required to provide access to OCn level Dedicated Transport under any circumstances pursuant to this Agreement. In addition, except as set forth in Section 5.2 below, BellSouth shall not be required to provide to DPI-Teleconnect unbundled access to interoffice transmission facilities that do not connect a pair of wire centers or switches owned by BellSouth ("Entrance Facilities").

5.2 Transition for DS1 and DS3 Dedicated Transport Including DS1 and DS3 Entrance Facilities

5.2.1 For purposes of this Section 5.2, the Transition Period for the Embedded Base of DS1 and DS3 Dedicated Transport, Embedded Base Entrance Facilities and for Excess DS1 and DS3 Dedicated Transport, is the twelve (12) month period beginning March 11, 2005 and ending March 10, 2006.

5.2.2 For purposes of this Section 5.2, Embedded Base means DS1 and DS3 Dedicated Transport that were in service for DPI-Teleconnect as of March 10, 2005 in those wire centers that, as of such date, met the criteria set forth in Sections 5.2.6.1 or 5.2.6.2 below. Subsequent disconnects or loss of End Users shall be removed from the Embedded Base.

5.2.3 For purposes of this Section 5.2, Embedded Base Entrance Facilities means Entrance Facilities that were in service for DPI-Teleconnect as of March 10, 2005. Subsequent disconnects or loss of customers shall be removed from the Embedded Base.

5.2.4 For purposes of this Section 5.2, Excess DS1 and DS3 Dedicated Transport means those DPI-Teleconnect DS1 and DS3 Dedicated Transport facilities in service as of March 10, 2005, in excess of the caps set forth in Section 5.2.6.1 and 5.2.6.2 below. Subsequent disconnects and loss of End Users shall be removed from Excess DS1 and DS3 Loops.

5.2.5 For purposes of this Section 5.2, a Business Line is as defined in 47 C.F.R. § 51.5.

5.2.6 Notwithstanding anything to the contrary in this Agreement, BellSouth shall make available Dedicated Transport as described in this Section 5.2 only for DPI-Teleconnect's Embedded Base and Excess Dedicated Transport during the Transition Period:

5.2.6.1 DS1 Dedicated Transport where both wire centers at the end points of the route contain 38,000 or more Business Lines or four (4) or more fiber-based collocators.

5.2.6.2 DS3 Dedicated Transport where both wire centers at the end points of the route contain 24,000 or more Business Lines or three (3) or more fiber-based collocators.

5.2.7 A list of wire centers meeting the criteria set forth in Sections 5.2.6.1 or 5.2.6.2 above as of March 10, 2005, as approved by the Mississippi Public Service Commission in Docket No. 2005-AD-139, is available on BellSouth's Master List of Unimpaired Wire Centers as Approved by State Commissions in its Region (Master List of Unimpaired Wire Centers), which is located on BellSouth's Interconnection Services Web site.

5.2.8 Notwithstanding anything to the contrary in this Agreement, BellSouth shall make available Entrance Facilities only for Entrance Facilities and only during the Transition Period.

5.2.9 Notwithstanding the Effective Date of this Agreement, during the Transition Period, the rates for DPI-Teleconnect's Embedded Base of DS1 and DS3 Dedicated Transport, DPI-Teleconnect's Embedded Base Entrance Facilities and

for DPI-Teleconnect's Excess DS1 and DS3 Dedicated Transport, as described in this Section 5.2, shall be as set forth in Exhibit the equal to the higher of:

5.2.9.1 115% of the rate paid for the element on June 15, 2004; or

5.2.9.2 115% of a new rate the Commission establishes, if any, between June 16, 2004 and March 11, 2005.

5.2.9.3 These rates shall be as set forth in Exhibit A to Attachment 2 of the Agreement and this Section 5.2.9.

5.2.10 The Transition Period shall apply only to (1) DPI-Teleconnect's Embedded Base and Embedded Base Entrance Facilities; and (2) DPI-Teleconnect's Excess DS1 and DS3 Dedicated Transport. DPI-Teleconnect shall not add new Entrance Facilities pursuant to this Agreement. Further, DPI-Teleconnect shall not add new DS1 or DS3 Dedicated Transport as described in this Section 5.2 pursuant to this Agreement, except pursuant to the self-certification process as set forth in Section 1.5 above of and as set forth in Section 5.2.15 below.

5.2.11 Once a wire center exceeds either of the thresholds set forth in Section 5.2.6.1 above, no future DS1 Dedicated Transport unbundling will be required in that wire center.

5.2.12 Once a wire center exceeds either of the thresholds set forth in Section 5.2.6.2 above, no future DS3 Dedicated Transport will be required in that wire center.

5.2.13 No later than December 9, 2005 DPI-Teleconnect shall submit spreadsheet(s) identifying all of the Embedded Base of circuits, Embedded Base Entrance Facilities, and Excess DS1 and DS3 Dedicated Transport to be either disconnected or converted to other BellSouth services pursuant to Section 1.3 above. The Parties shall negotiate a project schedule for the Conversion of the Embedded Base, Embedded Base Entrance Facilities and Excess DS1 and DS3 Dedicated Transport.

5.2.13.1 If DPI-Teleconnect fails to submit the spreadsheet(s) specified in Section 5.2.13 above for all of its Embedded Base, Embedded Base Entrance Facilities and Excess DS1 and DS3 Dedicated Transport prior to December 9, 2005, BellSouth will identify DPI-Teleconnect's remaining Embedded Base, Embedded Base Entrance Facilities and Excess DS1 and DS3 Dedicated Transport, if any, and will transition such circuits to the equivalent tariffed BellSouth service(s). Those circuits identified and transitioned by BellSouth pursuant to this Section 5.2.13.1 shall be subject to all applicable disconnect charges as set forth in this Agreement and the full nonrecurring charges for installation of the equivalent tariffed BellSouth service as set forth in BellSouth's tariffs.

5.2.14 For Embedded Base circuits, Embedded Base Entrance Facilities and Excess DS1 and DS3 Dedicated Transport converted pursuant to Section 5.2.13 or transitioned pursuant to Section 5.2.13.1 above, the applicable recurring tariff charge shall apply to each circuit as of the earlier of the date each circuit is converted or transitioned, as applicable, or March 11, 2006.

5.2.15 Modifications and Updates to the Wire Center List and Subsequent Transition Periods

5.2.15.1 In the event BellSouth identifies additional wire centers that meet the criteria set forth in Sections 5.2.6.1 or 5.2.6.2 above, but that were not included in the Initial Wire Center List, BellSouth shall include such additional wire centers in CNL. Each such list of additional wire centers shall be considered a Subsequent Wire Center List.

5.2.15.2 Effective ten (10) business days after the date of a BellSouth CNL providing a Subsequent Wire Center List, BellSouth shall not be required to provide DS1 and DS3 Dedicated Transport, as applicable, in such additional wire center(s), except pursuant to the self-certification process as set forth in Section 1.5 above.

5.2.15.3 For purposes of Section 5.2.15, BellSouth shall make available DS1 and DS3 Dedicated Transport that was in service for DPI-Teleconnect in a wire center on the Subsequent Wire Center List as of the tenth (10th) business day after the date of BellSouth's CNL identifying the Subsequent Wire Center List (Subsequent Embedded Base) until ninety (90) days after the tenth (10th) business day from the date of BellSouth's CNL identifying the Subsequent Wire Center List (Subsequent Transition Period).

5.2.15.4 Subsequent disconnects or loss of End Users shall be removed from the Subsequent Embedded Base.

5.2.15.5 The rates that shall apply to the Subsequent Embedded Base during the Subsequent Transition Period shall equal the rate paid for that element at the time of BellSouth's posting of the CNL, plus 15%.

5.2.15.6 No later than forty (40) days from BellSouth's CNL identifying the Subsequent Wire Center List DPI-Teleconnect shall submit a spreadsheet(s) identifying the Subsequent Embedded Base of circuits to be disconnected or converted to other BellSouth services. The Parties shall negotiate a project schedule for the Conversion of the Subsequent Embedded Base.

5.2.15.6.1 If DPI-Teleconnect fails to submit the spreadsheet(s) specified in Section 5.2.15.6 above for all of its Subsequent Embedded Base within forty (40) days after the date of BellSouth's CNL identifying the Subsequent Wire Center List, BellSouth will identify DPI-Teleconnect's remaining Subsequent Embedded Base, if any, and

will transition such circuits to the equivalent tariffed BellSouth service(s). Those circuits identified and transitioned by BellSouth shall be subject to the applicable disconnect charges as set forth in this Agreement and the full nonrecurring charges for installation of the equivalent tariffed BellSouth service as set forth in BellSouth's tariffs.

5.2.15.7 For Subsequent Embedded Base circuits converted pursuant to Section 5.2.15.6 above or transitioned pursuant to Section 5.2.15.6.1 above, the applicable recurring tariff charges shall apply as of the earlier of the date each circuit is converted or transitioned, as applicable, or the first day after the end of the Subsequent Transition Period.

5.2.16 BellSouth shall offer Dedicated Transport:

5.2.16.1 As capacity on a shared facility; and

5.2.16.2 As a circuit (i.e., DS0, DS1, DS3, STS-1) dedicated to DPI-Teleconnect.

5.2.17 Dedicated Transport may be provided over facilities such as optical fiber, copper twisted pair, and coaxial cable, and shall include transmission equipment such as line terminating equipment, amplifiers, and regenerators.

5.2.18 DPI-Teleconnect may obtain a maximum of twelve (12) unbundled DS3 Dedicated Transport circuits on each route where DS3 Dedicated Transport is available as a Network Element, and a maximum of ten (10) unbundled DS1 Dedicated Transport circuits on each Route where there is no 251(c)(3) unbundling obligation for DS3 Dedicated Transport but for which impairment exists for DS1 Dedicated Transport. A route is defined as a transmission path between one of BellSouth's wire centers or switches and another of BellSouth's wire centers or switches. A route between two (2) points may pass through one or more intermediate wire centers or switches. Transmission paths between identical end points are the same "route", irrespective of whether they pass through the same intermediate wire centers or switches, if any.

5.3 <u>Dark Fiber Transport.</u> Dark Fiber Transport is defined as Dedicated Transport that consists of unactivated optical interoffice transmission facilities without attached signal regeneration, multiplexing, aggregation or other electronics. Except as set forth in Section 5.3.1 below, BellSouth shall not be required to provide access to Dark Fiber Transport Entrance Facilities pursuant to this Agreement.

5.3.1 <u>Transition for Dark Fiber Transport and Dark Fiber Transport Entrance Facilities</u>

5.3.1.1 For purposes of this Section 5.3.1, the Transition Period for the Embedded Base of Dark Fiber Transport is the eighteen (18) month period beginning March 11, 2005 and ending September 10, 2006.

5.3.1.2 For purposes of this Section 5.3.1, Embedded Base means Dark Fiber Transport that was in service for DPI-Teleconnect as of March 10, 2005 in those wire centers that, as of such date, met the criteria set forth in Section 5.3.1.4.1. Subsequent disconnects or loss of End Users shall be removed from the Embedded Base.

5.3.1.3 For purposes of this Section, a Business Line is as defined in 47 C.F.R. § 51.5.

5.3.1.4 Notwithstanding anything to the contrary in this Agreement, BellSouth shall make available Dark Fiber Transport as described in this Section 5.3.1 only for DPI-Teleconnect's Embedded Base during the Transition Period:

5.3.1.4.1 Dark Fiber Transport where both wire centers at the end points of the route contain twenty-four thousand (24,000) or more Business Lines or three (3) or more fiber-based collocators.

5.3.1.5 A list of wire center meeting the criteria set forth in Section 5.3.1.4.1 above as of March 10, 2005, as approved by the Mississippi Public Service Commission in Docket No. 2005-AD-139, is available on BellSouth's Master List of Unimpaired Wire Centers as Approved by State Commissions in its Region (Master List of Unimpaired Wire Centers), which is located on BellSouth's Interconnection Services Web site.

5.3.1.6 Notwithstanding the Effective Date of this Agreement, during the Transition Period, the rates for DPI-Teleconnect's Embedded Base of Dark Fiber Transport and Dark Fiber Transport Entrance Facilities as described in Section 5.3.1.2 above shall be equal to the higher of :

5.3.1.6.1 115% of the rate paid for the element on June 15, 2004; or

5.3.1.6.2 115% of a new rate the Commission establishes, if any between June 16, 2004 and March 11, 2005,

5.3.1.6.3 These rates shall be as set forth in Exhibit A to the Agreement and this Section 5.3.1.6.

5.3.1.7 The Transition Period shall apply only to DPI-Teleconnect's Embedded Base of Dark Fiber Transport and Dark Fiber Entrance Facilities. DPI-Teleconnect shall not add new Dark Fiber Transport as described in this Section 5.3.1 except pursuant to the self-certification process as set forth in Section 1.5 of this Attachment and as set forth in Section 5.3.1.11 below. Further, DPI-Teleconnect shall not add new Dark Fiber Entrance Facilities pursuant to this Agreement.

5.3.1.8 Once a wire center exceeds either of the thresholds set forth in Section 5.3.1.4.1 above, no future Dark Fiber Transport unbundling will be required in that wire center.

5.3.1.9 No later than June 10, 2006 DPI-Teleconnect shall submit spreadsheet(s) identifying all of the Embedded Base of Dark Fiber Transport and Dark Fiber Entrance Facilities to be either disconnected or converted to other BellSouth services as Conversions pursuant to Section 1.3 above. The Parties shall negotiate a project schedule for the Conversion of the Embedded Base.

5.3.1.9.1 If DPI-Teleconnect fails to submit the spreadsheet(s) specified in Section 5.3.1.9 above for all of its Embedded Base prior to June 10, 2006, BellSouth will identify DPI-Teleconnect's remaining Embedded Base, if any, and will transition such circuits to the equivalent tariffed BellSouth service(s). Those circuits identified and transitioned by BellSouth pursuant to this Section 5.3.1.9.1 shall be subject to all applicable disconnect charges as set forth in this Agreement and the full nonrecurring charges for installation of the equivalent tariffed BellSouth service as set forth in BellSouth's tariffs.

5.3.1.10 For Embedded Base circuits converted pursuant to Section 5.3.1.9 above or transitioned pursuant to Section 5.3.1.9.1 above, the applicable recurring tariff charge shall apply to each circuit as of the earlier of the date each circuit is converted or transitioned, as applicable, or September 11, 2006.

5.3.1.11 <u>Modifications and Updates to the Wire Center List and Subsequent Transition Periods</u>

5.3.1.11.1 In the event BellSouth identifies additional wire centers that meet the criteria set forth in Section 5.3.1.4.1 above, but that were not included in the Initial Wire Center List, BellSouth shall include such additional wire centers in a CNL. Each such list of additional wire centers shall be considered a "Subsequent Wire Center List".

5.3.1.11.2 Effective ten (10) business days after the date of a BellSouth CNL providing a Subsequent Wire Center List, BellSouth shall not be required to provide unbundled access to Dark Fiber Transport, as applicable, in such additional wire center(s), except pursuant to the self-certification process as set forth in Section 1.5 above.

5.3.1.11.3 For purposes of Section 5.3.1.11, BellSouth shall make available Dark Fiber Transport that were in service for DPI-Teleconnect in a wire center on the Subsequent Wire Center List as of the tenth (10th) business day after the date of BellSouth's CNL identifying the Subsequent Wire Center List (Subsequent Embedded Base) until ninety (90) days after the tenth (10th) business day from the date of BellSouth's CNL identifying the Subsequent Wire Center List (Subsequent Transition Period).

5.3.1.11.4 Subsequent disconnects or loss of End Users shall be removed from the Subsequent Embedded Base.

5.3.1.11.5 The rates that shall apply to the Subsequent Embedded Base during the Subsequent Transition Period shall equal the rate paid for that element at the time of BellSouth's posting of the CNL, plus 15%.

5.3.1.11.6 No later than forty (40) days from BellSouth's CNL identifying the Subsequent Wire Center List DPI-Teleconnect shall submit a spreadsheet(s) identifying the Subsequent Embedded Base of circuits to be disconnected or converted to other BellSouth services. The Parties shall negotiate a project schedule for the Conversion of the Subsequent Embedded Base.

5.3.1.11.6.1 If DPI-Teleconnect fails to submit the spreadsheet(s) specified in Section 5.3.1.11.6 above for all of its Subsequent Embedded Base within forty (40) days after the date of BellSouth's CNL identifying the Subsequent Wire Center List, BellSouth will identify DPI-Teleconnect's remaining Subsequent Embedded Base, if any, and will transition such circuits to the equivalent tariffed BellSouth service(s). Those circuits identified and transitioned by BellSouth shall be subject to the applicable disconnect charges as set forth in this Agreement and the full nonrecurring charges for installation of the equivalent tariffed BellSouth service as set forth in BellSouth's tariffs.

5.3.1.11.7 For Subsequent Embedded Base circuits converted pursuant to Section 5.3.1.11.6 above or transitioned pursuant to Section 5.3.1.11.6.1 above, the applicable recurring tariff charges shall apply as of the earlier of the date each circuit is converted or transitioned, as applicable, or the first day after the end of the Subsequent Transition Period.

6 Subloop Elements

6.1 Where facilities permit, BellSouth shall offer access to its Unbundled Subloop (USL) elements as specified herein.

6.2 Unbundled Subloop Distribution (USLD)

6.2.1 The USLD facility is a dedicated transmission facility that BellSouth provides from an End User's point of demarcation to a BellSouth cross-connect device. The BellSouth cross-connect device may be located within a remote terminal (RT) or a stand-alone cross-box in the field or in the equipment room of a building. The USLD media is a copper twisted pair that can be provisioned as a 2-wire or 4-wire facility. BellSouth will make available the following subloop distribution offerings where facilities exist:

USLD – Voice Grade (USLD-VG)
Unbundled Copper Subloop (UCSL)
USLD – Intrabuilding Network Cable (USLD-INC (aka riser cable))

6.2.2 USLD-VG is a copper subloop facility from the cross-box in the field up to and including the point of demarcation at the End User's premises and may have load coils.

6.2.3 UCSL is a copper facility eighteen thousand (18,000) feet or less in length provided from the cross-box in the field up to and including the End User's point of demarcation. If available, this facility will not have any intervening equipment such as load coils between the End User and the cross-box.

6.2.4 If DPI-Teleconnect requests a UCSL and it is not available, DPI-Teleconnect may request the copper Subloop facility be modified pursuant to the ULM process to remove load coils and/or excessive bridged taps. If load coils and/or excessive bridged taps are removed, the facility will be classified as a UCSL.

6.2.5 USLD-INC is the distribution facility owned or controlled by BellSouth inside a building or between buildings on the same property that is not separated by a public street or road. USLD-INC includes the facility from the cross-connect device in the building equipment room up to and including the point of demarcation at the End User's premises.

6.2.6 Upon request for USLD-INC from DPI-Teleconnect, BellSouth will install a cross-connect panel in the building equipment room for the purpose of accessing USLD-INC pairs from a building equipment room. The cross-connect panel will function as a single point of interconnection (SPOI) for USLD-INC and will be accessible by multiple carriers as space permits. BellSouth will place cross-connect blocks in twenty five (25) pair increments for DPI-Teleconnect's use on this cross-connect panel. DPI-Teleconnect will be responsible for connecting its facilities to the twenty five (25) pair cross-connect block(s).

6.2.7 For access to Voice Grade USLD and UCSL, DPI-Teleconnect shall install a cable to the BellSouth cross-box pursuant to the terms and conditions for physical collocation for remote sites set forth in Attachment 4. This cable would be connected by a BellSouth technician within the BellSouth cross-box during the set-up process. DPI-Teleconnect's cable pairs can then be connected to BellSouth's USL within the BellSouth cross-box by the BellSouth technician.

6.2.8 Through the SI process, BellSouth will determine whether access to USLs at the location requested by DPI-Teleconnect is technically feasible and whether sufficient capacity exists in the cross-box. If existing capacity is sufficient to meet DPI-Teleconnect's request, then BellSouth will perform the site set-up as described in the CLEC Information Package, located at BellSouth's Interconnection Web site: www.interconnection.bellsouth.com/products/html/unes.html.

6.2.9 The site set-up must be completed before DPI-Teleconnect can order Subloop pairs. For the site set-up in a BellSouth cross-connect box in the field, BellSouth will perform the necessary work to splice DPI-Teleconnect's cable into the cross-connect box. For the site set-up inside a building equipment room, BellSouth will perform the necessary work to install the cross-connect panel and the connecting block(s) that will be used to provide access to the requested USLs.

6.2.10 Once the site set-up is complete, DPI-Teleconnect will request Subloop pairs through submission of a LSR form to the LCSC. OC is required with USL pair provisioning when DPI-Teleconnect requests reuse of an existing facility, and the OC charge shall be billed in addition to the USL pair rate. For expedite requests by DPI-Teleconnect for Subloop pairs, expedite charges will apply for intervals less than five (5) days.

6.2.11 SLs will be provided in accordance with BellSouth's TR73600 Unbundled Local Loop Technical Specifications.

6.3 Unbundled Network Terminating Wire (UNTW)

6.3.1 UNTW is unshielded twisted copper wiring that is used to extend circuits from an intra-building network cable terminal or from a building entrance terminal to an individual End User's point of demarcation. It is the final portion of the Loop that in multi-subscriber configurations represents the point at which the network branches out to serve individual subscribers.

6.3.2 This element will be provided in MDUs and/or Multi-Tenants Units (MTUs) where either Party owns wiring all the way to the End User's premises. Neither Party will provide this element in locations where the property owner provides its own wiring to the End User's premises, where a third party owns the wiring to the End User's premises.

6.3.3 Requirements

6.3.3.1 On a multi-unit premises, upon request of the other Party (Requesting Party), the Party owning the network terminating wire (Provisioning Party) will provide access to UNTW pairs on an Access Terminal that is suitable for use by multiple carriers at each Garden Terminal or Wiring Closet.

6.3.3.2 The Provisioning Party shall not be required to install new or additional NTW beyond existing NTW to provision the services of the Requesting Party.

6.3.3.3 In existing MDUs and/or MTUs in which BellSouth does not own or control wiring (INC/NTW) to the End Users premises, and DPI-Teleconnect does own or control such wiring, DPI-Teleconnect will install UNTW Access Terminals for BellSouth under the same terms and conditions as BellSouth provides UNTW Access Terminals to DPI-Teleconnect.

6.3.3.4 In situations in which BellSouth activates a UNTW pair, BellSouth will compensate DPI-Teleconnect for each pair activated commensurate to the price specified in DPI-Teleconnect's Agreement.

6.3.3.5 Upon receipt of the UNTW SI requesting access to the Provisioning Party's UNTW pairs at a multi-unit premises, representatives of both Parties will participate in a meeting at the site of the requested access. The purpose of the site visit will include discussion of the procedures for installation and location of the Access Terminals. By request of the Requesting Party, an Access Terminal will be installed either adjacent to each of the Provisioning Party's Garden Terminal or inside each Wiring Closet. The Requesting Party will deliver and connect its central office facilities to the UNTW pairs within the Access Terminal. The Requesting Party may access any available pair on an Access Terminal. A pair is available when a pair is not being utilized to provide service or where the End User has requested a change in its local service provider to the Requesting Party. Prior to connecting the Requesting Party's service on a pair previously used by the Provisioning Party, the Requesting Party is responsible for ensuring the End User is no longer using the Provisioning Party's service or another CLEC's service before accessing UNTW pairs.

6.3.3.6 Access Terminal installation intervals will be established on an individual case basis.

6.3.3.7 The Requesting Party is responsible for obtaining the property owner's permission for the Provisioning Party to install an Access Terminal(s) on behalf of the Requesting Party. The submission of the SI by the Requesting Party will serve as certification by the Requesting Party that such permission has been obtained. If the property owner objects to Access Terminal installations that are in progress or within thirty (30) days after completion and demands removal of Access Terminals, the Requesting Party will be responsible for costs associated with removing Access Terminals and restoring the property to its original state prior to Access Terminals being installed.

6.3.3.8 The Requesting Party shall indemnify and hold harmless the Provisioning Party against any claims of any kind that may arise out of the Requesting Party's failure to obtain the property owner's permission. The Requesting Party will be billed for nonrecurring and recurring charges for accessing UNTW pairs at the time the Requesting Party activates the pair(s). The Requesting Party will notify the Provisioning Party within five (5) business days of activating UNTW pairs using the LSR form.

6.3.3.9 If a trouble exists on a UNTW pair, the Requesting Party may use an alternate spare pair that serves that End User if a spare pair is available. In such cases, the Requesting Party will re-terminate its existing jumper from the defective pair to the spare pair. Alternatively, the Requesting Party will isolate and report troubles in

the manner specified by the Provisioning Party. The Requesting Party must tag the UNTW pair that requires repair. If the Provisioning Party dispatches a technician on a reported trouble call and no UNTW trouble is found, the Provisioning Party will charge Requesting Party for time spent on the dispatch and testing the UNTW pair(s).

6.3.3.10 If the Requesting Party initiates the Access Terminal installation and the Requesting Party has not activated at least ten percent (10%) of the capacity of the Access Terminal installed pursuant to the Requesting Party's request for an Access Terminal within six (6) months of installation of the Access Terminal, the Provisioning Party will bill the Requesting Party a nonrecurring charge equal to the actual cost of provisioning the Access Terminal.

6.3.3.11 If the Provisioning Party determines that the Requesting Party is using the UNTW pairs without reporting the activation of the pairs, the Requesting Party will be billed for the use of that pair back to the date the End User began receiving service from the Requesting Party at that location. Upon request, the Requesting Party will provide copies of its billing record to substantiate such date. If the Requesting Party fails to provide such records, then the Provisioning Party will bill the Requesting Party back to the date of the Access Terminal installation.

UNBUNDLED NETWORK ELEMENTS - Mississippi

Att: 2 Exh: B

CATEGORY		RATE ELEMENTS	Interim	Zone	BCS	USOC	RATES($)					Svc Order Submitted Elec per LSR	Svc Order Submitted Manually per LSR	Incremental Charge - Manual Svc Order vs. Electronic-1st	Incremental Charge - Manual Svc Order vs. Electronic-Add'l	Incremental Charge - Manual Svc Order vs. Electronic-Disc 1st	Incremental Charge - Manual Svc Order vs. Electronic-Disc Add'l
							Rec	Nonrecurring		Nonrecurring Disconnect		OSS Rates($)					
								First	Add'l	First	Add'l	SOMEC	SOMAN	SOMAN	SOMAN	SOMAN	SOMAN
COMMINGLING																	
		Commingling Authorization			UNCVX UNCDX UNC1X UNC3X UNCSX U1TD1 U1TD3 U1TS1 UE3 UDLSX U1TVX U1TDX U1TUB ULDVX ULDD1 ULDD3 ULDS1	CMGAU	0.00	0.00	0.00	0.00	0.00						
	Commingled (UNE part of single bandwidth circuit)																
		Commingled VG COCI			XDV2X NTCVG	1D1VG	0.5737	6.62	4.74								
		Commingled Digital COCI			XDV6X NTCUD	1D1DD	1.22	6.62	4.74								
		Commingled ISDN COCI			XDD4X	UC1CA	2.62	6.62	4.74								
		Commingled 2-wire VG Interoffice Channel			XDV2X	U1TV2	20.32	40.77	27.57	17.26	7.11						
		Commingled 4-wire VG Interoffice Channel			XDV6X	U1TV4	17.86	40.77	27.57	17.26	7.11						
		Commingled 56kbps Interoffice Channel			XDD4X	U1TD5	14.14	40.77	27.57	17.26	7.11						
		Commingled 64kbps Interoffice Channel			XDD4X	U1TD6	14.14	40.77	27.57	17.26	7.11						
		Commingled VG/DS0 Interoffice Channel Mileage			XDV2X XDV6X XDD4X	1L5XX	0.0088										
		Commingled 2-wire Local Loop Zone 1		1	XDV2X	UEAL2	13.89	105.96	68.28	52.82	10.37						
		Commingled 2-wire Local Loop Zone 2		2	XDV2X	UEAL2	18.75	105.96	68.28	52.82	10.37						
		Commingled 2-wire Local Loop Zone 3		3	XDV2X	UEAL2	27.55	105.96	68.28	52.82	10.37						
		Commingled 2-wire Local Loop Zone 4		4	XDV2X	UEAL2	45.72	105.96	68.28	52.82	10.37						
		Commingled 4-wire Local Loop Zone 1		1	XDV6X	UEAL4	27.47	132.27	94.59	60.68	14.64						
		Commingled 4-wire Local Loop Zone 2		2	XDV6X	UEAL4	38.26	132.27	94.59	60.68	14.64						
		Commingled 4-wire Local Loop Zone 3		3	XDV6X	UEAL4	50.03	132.27	94.59	60.68	14.64						
		Commingled 4-wire Local Loop Zone 4		4	XDV6X	UEAL4	50.03	132.27	94.59	60.68	14.64						
		Commingled 56kbps Local Loop Zone 1		1	XDD4X	UDL56	27.44	126.53	88.85	60.68	14.64						
		Commingled 56kbps Local Loop Zone 2		2	XDD4X	UDL56	34.55	126.53	88.85	60.68	14.64						
		Commingled 56kbps Local Loop Zone 3		3	XDD4X	UDL56	40.76	126.53	88.85	60.68	14.64						
		Commingled 56kbps Local Loop Zone 4		4	XDD4X	UDL56	32.25	126.53	88.85	60.68	14.64						
		Commingled 64kbps Local Loop Zone 1		1	XDD4X	UDL64	27.44	126.53	88.85	60.68	14.64						
		Commingled 64kbps Local Loop Zone 2		2	XDD4X	UDL64	34.55	126.53	88.85	60.68	14.64						
		Commingled 64kbps Local Loop Zone 3		3	XDD4X	UDL64	40.76	126.53	88.85	60.68	14.64						
		Commingled 64kbps Local Loop Zone 4		4	XDD4X	UDL64	32.25	126.53	88.85	60.68	14.64						
		Commingled ISDN Local Loop Zone 1		1	XDD4X	U1L2X	21.01	117.61	79.92	52.82	10.37						
		Commingled ISDN Local Loop Zone 2		2	XDD4X	U1L2X	27.59	117.61	79.92	52.82	10.37						
		Commingled ISDN Local Loop Zone 3		3	XDD4X	U1L2X	37.34	117.61	79.92	52.82	10.37						
		Commingled ISDN Local Loop Zone 4		4	XDD4X	U1L2X	59.18	117.61	79.92	52.82	10.37						
		Commingled DS1 COCI			XDH1X NTCD1	UC1D1	12.96	6.62	4.74								
		Commingled DS1 Interoffice Channel			XDH1X	U1TF1	57.33	89.79	82.28	16.86	14.90						
		Commingled DS1 Interoffice Channel Mileage			XDH1X	1L5XX	0.1813										
		Commingled DS1/DS0 Channel System			XDH1X	MQ1	102.85	91.57	62.94	10.87	10.10						
		Commingled DS1 Local Loop Zone 1		1	XDH1X	USLXX	79.08	253.93	158.45	46.10	12.07						
		Commingled DS1 Local Loop Zone 2		2	XDH1X	USLXX	129.38	253.93	158.45	46.10	12.07						
		Commingled DS1 Local Loop Zone 3		3	XDH1X	USLXX	206.74	253.93	158.45	46.10	12.07						
		Commingled DS1 Local Loop Zone 4		4	XDH1X	USLXX	458.46	253.93	158.45	46.10	12.07						
		Commingled DS3 Local Loop			HFQC6	UE3PX	326.15	454.13	265.47	123.23	86.19						
		Commingled DS3/STS-1 Local Loop Mileage			HFQC6 HFRST	1L5ND	11.20										
		Commingled STS-1 Local Loop			HFRST	UDLS1	338.55	454.13	265.47	123.23	86.19						
		Commingled DS3/DS1 Channel System			HFQC6	MQ3	170.63	179.17	94.52	34.30	32.82						
		Commingled DS3 Interoffice Channel			HFQC6	U1TF3	641.90	280.37	163.70	62.08	60.29						
		Commingled DS3 Interoffice Channel Mileage			HFQC6	1L5XX	4.29										
		Commingled STS-1Interoffice Channel			HFRST	U1TFS	644.21	280.37	163.70	62.08	60.29						
		Commingled STS-1Interoffice Channel Mileage			HFRST	1L5XX	4.29										
		Commingled Dark Fiber - Interoffice Transport, Per Four Fiber Strands, Per Route Mile Or Fraction Thereof			HEQDL	1L5DF	28.27										

UNBUNDLED NETWORK ELEMENTS - Mississippi																	Att: 2 Exh: B
CATEGORY		RATE ELEMENTS	Interim	Zone	BCS	USOC	RATES($)					Svc Order Submitted Elec per LSR	Svc Order Submitted Manually per LSR	Incremental Charge - Manual Svc Order vs. Electronic-1st	Incremental Charge - Manual Svc Order vs. Electronic-Add'l	Incremental Charge - Manual Svc Order vs. Electronic-Disc 1st	Incremental Charge - Manual Svc Order vs. Electronic-Disc Add'l
							Rec	Nonrecurring		Nonrecurring Disconnect		OSS Rates($)					
								First	Add'l	First	Add'l	SOMEC	SOMAN	SOMAN	SOMAN	SOMAN	SOMAN
		Commingled Dark Fiber - Interoffice Transport, Per Four Fiber Strands, Per Route Mile Or Fraction Thereof			HEQDL	UDF14		642.79	138.67	326.97	203.85						
		UNE to Commingled Conversion Tracking			XDH1X HFQC6	CMGUN	0.00	0.00	0.00	0.00	0.00						
		SPA to Commingled Conversion Tracking			XDH1X HFQC6	CMGSP	0.00	0.00	0.00	0.00	0.00						
ADDITIONAL NETWORK ELEMENTS																	
	Optional Features & Functions:																
		Wholesale - UNE, Switch-As-Is Conversion Charge			UNCNX UNCVX UNCDX UNC1X UNC3X UNCSX UDFCX XDH1X HFQC6 XDD2X XDV6X XDDFX XDD4X HFRST	UNCCC		5.63	5.63								
		Unbundled Misc Rate Element, SNE SAI, Single Network Element - Switch As Is Non-recurring Charge, per circuit (LSR)	I		U1TVX U1TDX U1TD1 U1TD3 U1TS1 UDF UE3	URESL		40.22	13.50								
		Unbundled Misc Rate Element, SNE SAI, Single Network Element - Switch As Is Non-recurring Charge, incremental charge per circuit on a spreadsheet	I		U1TVX U1TDX U1TD1 U1TD3 U1TS1 UDF UE3	URESP		63.98	25.59								
UNBUNDLED EXCHANGE ACCESS LOOP																	
	2-WIRE ANALOG VOICE GRADE LOOP																
		Switch-As-Is Conversion rate per UNE Loop, Single LSR, (per DS0)			UEA	URESL		25.01	3.53								
		Switch-As-Is Conversion rate per UNE Loop, Spreadsheet, (per DS0)			UEA	URESP		26.50	5.02								
	4-WIRE ANALOG VOICE GRADE LOOP																
		Switch-As-Is Conversion rate per UNE Loop, Single LSR, (per DS0)			UEA	URESL		25.01	3.53								
		Switch-As-Is Conversion rate per UNE Loop, Spreadsheet, (per DS0)			UEA	URESP		26.50	5.02								
	4-WIRE DS1 DIGITAL LOOP																
		Switch-As-Is Conversion rate per UNE Loop, Single LSR, (per DS1)			USL	URESL		25.01	3.53								
		Switch-As-Is Conversion rate per UNE Loop, Spreadsheet, (per DS1)			USL	URESP		26.50	5.02								
	4-WIRE 19.2, 56 OR 64 KBPS DIGITAL GRADE LOOP																
		Switch-As-Is Conversion rate per UNE Loop, Single LSR, (per DS0)			UDL	URESL		25.01	3.53								
		Switch-As-Is Conversion rate per UNE Loop, Spreadsheet, (per DS0)			UDL	URESP		26.50	5.02								
UNE LOOP COMMINGLING																	
	2-WIRE ANALOG VOICE GRADE LOOP - COMMINGLING																
		2-Wire Analog Voice Grade Loop - Service Level 2 w/Loop or Ground Start Signaling - Zone 1		1	NTCVG	UEAL2	13.89	105.96	68.28	52.82	10.37						
		2-Wire Analog Voice Grade Loop - Service Level 2 w/Loop or Ground Start Signaling - Zone 2		2	NTCVG	UEAL2	18.75	105.96	68.28	52.82	10.37						
		2-Wire Analog Voice Grade Loop - Service Level 2 w/Loop or Ground Start Signaling - Zone 3		3	NTCVG	UEAL2	27.55	105.96	68.28	52.82	10.37						
		2-Wire Analog Voice Grade Loop - Service Level 2 w/Loop or Ground Start Signaling - Zone 4		4	NTCVG	UEAL2	45.72	105.96	68.28	52.82	10.37						
		2-Wire Analog Voice Grade Loop - Service Level 2 w/Reverse Battery Signaling - Zone 1		1	NTCVG	UEAR2	13.89	105.96	68.28	52.82	10.37						
		2-Wire Analog Voice Grade Loop - Service Level 2 w/Reverse Battery Signaling - Zone 2		2	NTCVG	UEAR2	18.75	105.96	68.28	52.82	10.37						
		2-Wire Analog Voice Grade Loop - Service Level 2 w/Reverse Battery Signaling - Zone 3		3	NTCVG	UEAR2	27.55	105.96	68.28	52.82	10.37						
		2-Wire Analog Voice Grade Loop - Service Level 2 w/Reverse Battery Signaling - Zone 4		4	NTCVG	UEAR2	45.72	105.96	68.28	52.82	10.37						

CATEGORY	RATE ELEMENTS	Interim	Zone	BCS	USOC	RATES($)					Svc Order Submitted Elec per LSR	Svc Order Submitted Manually per LSR	Incremental Charge - Manual Svc Order vs. Electronic-1st	Incremental Charge - Manual Svc Order vs. Electronic-Add'l	Incremental Charge - Manual Svc Order vs. Electronic-Disc 1st	Incremental Charge - Manual Svc Order vs. Electronic-Disc Add'l
						Rec	Nonrecurring		Nonrecurring Disconnect		OSS Rates($)					
							First	Add'l	First	Add'l	SOMEC	SOMAN	SOMAN	SOMAN	SOMAN	SOMAN
	Switch-As-Is Conversion rate per UNE Loop, Single LSR, (per DS0)			NTCVG	URESL		25.01	3.53								
	Switch-As-Is Conversion rate per UNE Loop, Spreadsheet, (per DS0)			NTCVG	URESP		26.50	5.02								
	Unbundled Loop Service Rearrangement, change in loop facility, per circuit			NTCVG	UREWO		87.56	36.29								
	Loop Tagging - Service Level 2 (SL2)			NTCVG	URETL		11.19	1.10								
				NTCVG												
4-WIRE ANALOG VOICE GRADE LOOP - COMMINGLING																
	4-Wire Analog Voice Grade Loop - Zone 1		1	NTCVG	UEAL4	27.47	132.27	94.59	60.68	14.64						
	4-Wire Analog Voice Grade Loop - Zone 2		2	NTCVG	UEAL4	38.26	132.27	94.59	60.68	14.64						
	4-Wire Analog Voice Grade Loop - Zone 3		3	NTCVG	UEAL4	50.03	132.27	94.59	60.68	14.64						
	4-Wire Analog Voice Grade Loop - Zone 4		4	NTCVG	UEAL4	50.03	132.27	94.59	60.68	14.64						
	Switch-As-Is Conversion rate per UNE Loop, Single LSR, (per DS0)			NTCVG	URESL		25.01	3.53								
	Switch-As-Is Conversion rate per UNE Loop, Spreadsheet, (per DS0)			NTCVG	URESP		26.50	5.02								
	Unbundled Loop Service Rearrangement, change in loop facility, per circuit			NTCVG	UREWO		87.56	36.29								
4-WIRE DS1 DIGITAL LOOP																
	4-Wire DS1 Digital Loop - Zone 1		1	NTCD1	USLXX	79.08	253.93	158.45	46.10	12.07						
	4-Wire DS1 Digital Loop - Zone 2		2	NTCD1	USLXX	129.38	253.93	158.45	46.10	12.07						
	4-Wire DS1 Digital Loop - Zone 3		3	NTCD1	USLXX	206.74	253.93	158.45	46.10	12.07						
	4-Wire DS1 Digital Loop - Zone 4		4	NTCD1	USLXX	458.46	253.93	158.45	46.10	12.07						
	Switch-As-Is Conversion rate per UNE Loop, Single LSR, (per DS1)			NTCD1	URESL		25.01	3.53								
	Switch-As-Is Conversion rate per UNE Loop, Spreadsheet, (per DS1)			NTCD1	URESP		26.50	5.02								
	Unbundled Loop Service Rearrangement, change in loop facility, per circuit			NTCD1	UREWO		100.90	42.96								
4-WIRE 19.2, 56 OR 64 KBPS DIGITAL GRADE LOOP																
	4 Wire Unbundled Digital Loop 2.4 Kbps-Zone 1		1	NTCUD	UDL2X	27.44	126.53	88.85	60.68	14.64						
	4 Wire Unbundled Digital Loop 2.4 Kbps - Zone 2		2	NTCUD	UDL2X	34.55	126.53	88.85	60.68	14.64						
	4 Wire Unbundled Digital Loop 2.4 Kbps - Zone 3		3	NTCUD	UDL2X	40.76	126.53	88.85	60.68	14.64						
	4 Wire Unbundled Digital Loop 2.4 Kbps - Zone 4		4	NTCUD	UDL2X	32.25	126.53	88.85	60.68	14.64						
	4 Wire Unbundled Digital Loop 4.8 Kbps - Zone 1		1	NTCUD	UDL4X	27.44	126.53	88.85	60.68	14.64						
	4 Wire Unbundled Digital Loop 4.8 Kbps - Zone 2		2	NTCUD	UDL4X	34.55	126.53	88.85	60.68	14.64						
	4 Wire Unbundled Digital Loop 4.8 Kbps - Zone 3		3	NTCUD	UDL4X	40.76	126.53	88.85	60.68	14.64						
	4 Wire Unbundled Digital Loop 4.8 Kbps - Zone 4		4	NTCUD	UDL4X	32.25	126.53	88.85	60.68	14.64						
	4 Wire Unbundled Digital Loop 9.6 Kbps - Zone 1		1	NTCUD	UDL9X	27.44	126.53	88.85	60.68	14.64						
	5 Wire Unbundled Digital Loop 9.6 Kbps - Zone 2		2	NTCUD	UDL9X	34.55	126.53	88.85	60.68	14.64						
	6 Wire Unbundled Digital Loop 9.6 Kbps - Zone 3		3	NTCUD	UDL9X	40.76	126.53	88.85	60.68	14.64						
	7 Wire Unbundled Digital Loop 9.6 Kbps - Zone 4		4	NTCUD	UDL9X	32.25	126.53	88.85	60.68	14.64						
	4 Wire Unbundled Digital 19.2 Kbps - Zone 1		1	NTCUD	UDL19	27.44	126.53	88.85	60.68	14.64						
	4 Wire Unbundled Digital 19.2 Kbps - Zone 2		2	NTCUD	UDL19	34.55	126.53	88.85	60.68	14.64						
	4 Wire Unbundled Digital 19.2 Kbps - Zone 3		3	NTCUD	UDL19	40.76	126.53	88.85	60.68	14.64						
	4 Wire Unbundled Digital 19.2 Kbps - Zone 4		4	NTCUD	UDL19	32.25	126.53	88.85	60.68	14.64						
	4 Wire Unbundled Digital Loop 56 Kbps - Zone 1		1	NTCUD	UDL56	27.44	126.53	88.85	60.68	14.64						
	4 Wire Unbundled Digital Loop 56 Kbps - Zone 2		2	NTCUD	UDL56	34.55	126.53	88.85	60.68	14.64						
	4 Wire Unbundled Digital Loop 56 Kbps - Zone 3		3	NTCUD	UDL56	40.76	126.53	88.85	60.68	14.64						
	4 Wire Unbundled Digital Loop 56 Kbps - Zone 4		4	NTCUD	UDL56	32.25	126.53	88.85	60.68	14.64						
	4 Wire Unbundled Digital Loop 64 Kbps - Zone 1		1	NTCUD	UDL64	27.44	126.53	88.85	60.68	14.64						
	4 Wire Unbundled Digital Loop 64 Kbps - Zone 2		2	NTCUD	UDL64	34.55	126.53	88.85	60.68	14.64						
	4 Wire Unbundled Digital Loop 64 Kbps - Zone 3		3	NTCUD	UDL64	40.76	126.53	88.85	60.68	14.64						
	4 Wire Unbundled Digital Loop 64 Kbps - Zone 4		4	NTCUD	UDL64	32.25	126.53	88.85	60.68	14.64						
	Switch-As-Is Conversion rate per UNE Loop, Single LSR, (per DS0)			NTCUD	URESL		25.01	3.53								

UNBUNDLED NETWORK ELEMENTS - Mississippi																	Att: 2 Exh: B
CATEGORY		RATE ELEMENTS	Interim	Zone	BCS	USOC	RATES($)					Svc Order Submitted Elec per LSR	Svc Order Submitted Manually per LSR	Incremental Charge - Manual Svc Order vs. Electronic-1st	Incremental Charge - Manual Svc Order vs. Electronic-Add'l	Incremental Charge - Manual Svc Order vs. Electronic-Disc 1st	Incremental Charge - Manual Svc Order vs. Electronic-Disc Add'l
							Rec	Nonrecurring		Nonrecurring Disconnect		OSS Rates($)					
								First	Add'l	First	Add'l	SOMEC	SOMAN	SOMAN	SOMAN	SOMAN	SOMAN
		Switch-As-Is Conversion rate per UNE Loop, Spreadsheet, (per DS0)			NTCUD	URESP		26.50	5.02								
		Unbundled Loop Service Rearrangement, change in loop facility, per circuit			NTCUD	UREWO		101.94	49.66								
		Order Coordination for Specified Conversion Time (per LSR)			NTCVG NTCUD NTCD1	OCOSL		18.19									