WHOLESALE AGREEMENT

Customer Name: BLC Management LLC dba Angles Communication Solutions

BLC Management LLC dba Angles Communications Solutions	2
Table of Contents	3
General Terms and Conditions	5
Signature Page	24
Att 1 - Resale	25
Att 1 - Resale Discounts and Rates	51
Att 2 - UNEs	60
Att 2 - UNE Rates	123
Att 3 - Network Interconnection	471
Att 3 - Local Interconnection Rates	502
Att4-Collocation - Central Office	511
Att 4 - Collocation - Remote Site	555
Att 4 - Collocation Rates	591
Att 5 - Access to Numbers and Number Portability	638
Att 6 - Ordering	642
Att 7 - Billing	649
Att 7 - ODUF ADUF CMDS Rates	667
Att 8 - Rights of Way	676
Att 9 - Perf Meas Intro	678
Att 9 - Performance Measurements	680
Att 10 - Disaster Recovery Plan	892
Att 11 - BFR and NBR Process	901
Extension Amendment	906

Note: This page is not part of the actual signed contract/amendment, but is present for record keeping purposes only.

Interconnection Agreement

Between

BellSouth Telecommunications, Inc.

and

BLC Management LLC dba Angles Communication Solutions

TABLE OF CONTENTS

General Terms and Conditions

Definitions
1. CLEC Certification
2. Term of the Agreement
3. Operational Support Systems
4. Parity
5. White Pages Listings
6. Court Ordered Requests for Call Detail Records and Other Subscriber Information
7. Liability and Indemnification
8. Intellectual Property Rights and Indemnification
9. Proprietary and Confidential Information
10. Resolution of Disputes
11. Taxes
12. Force Majeure
13. Adoption of Agreements
14. Modification of Agreement
15. Non-waiver of Legal Rights
16. Indivisibility
17. Waivers
18. Governing Law
19. Assignments
20. Notices
21. Rule of Construction
22. Headings of No Force or Effect
23. Multiple Counterparts
24. Filing of Agreement
25. Compliance with Applicable Law
26. Necessary Approvals
27. Good Faith Performance
28. Nonexclusive Dealings
29. Rate True-Up
30. Survival
31. Entire Agreement

TABLE OF CONTENTS (cont'd)

Attachment 1 - Resale

Attachment 2 - Network Elements and Other Services

Attachment 3 - Network Interconnection

Attachment 4 - Physical Collocation – Central Office

Attachment 4 - Physical Collocation – Remote Site

Attachment 5 - Access to Numbers and Number Portability

Attachment 6 – Pre-Ordering, Ordering, Provisioning, Maintenance and Repair

Attachment 7 - Billing

Attachment 8 - Rights-of-Way, Conduits and Pole Attachments

Attachment 9 - Performance Measurements

Attachment 10- BellSouth Disaster Recovery Plan

Attachment 11–Bona Fide Request and New Business Request Process

AGREEMENT
GENERAL TERMS AND CONDITIONS

THIS AGREEMENT is made by and between BellSouth Telecommunications, Inc., (BellSouth), a Georgia corporation, and BLC Management LLC dba Angles Communication Solutions (BLC Management), a Tennessee corporation, and shall be effective on the Effective Date, as defined herein. This Agreement may refer to either BellSouth or BLC Management or both as a "Party" or "Parties."

W I T N E S S E T H

WHEREAS, BellSouth is a local exchange telecommunications company authorized to provide telecommunications services in the states of Alabama, Florida, Georgia, Kentucky, Louisiana, Mississippi, North Carolina, South Carolina and Tennessee; and

WHEREAS, BLC Management is or seeks to become a CLEC authorized to provide telecommunications services in the states of Alabama, Florida, Georgia, Kentucky, Louisiana, Mississippi, North Carolina, South Carolina, and Tennessee; and

WHEREAS, BLC Management wishes to resell BellSouth's telecommunications services and purchase network elements and other services, and, solely in connection therewith, may wish to utilize collocation space as set forth in Attachment 4 of this Agreement); and

WHEREAS, the Parties wish to interconnect their facilities and exchange traffic pursuant to Sections 251 and 252 of the Act.

NOW THEREFORE, in consideration of the mutual agreements contained herein, BellSouth and BLC Management agree as follows:

Definitions

Affiliate is defined as a person that (directly or indirectly) owns or controls, is owned or controlled by, or is under common ownership or control with, another person. For purposes of this paragraph, the term "own" means to own an equity interest (or equivalent thereof) of more than 10 percent.

Commission is defined as the appropriate regulatory agency in each state of BellSouth's nine-state region (Alabama, Florida, Georgia, Kentucky, Louisiana, Mississippi, North Carolina, South Carolina, and Tennessee).

Competitive Local Exchange Carrier (CLEC) means a telephone company certificated by the Commission to provide local exchange service within BellSouth's franchised area.

Effective Date is defined as the date that the Agreement is effective for purposes of rates, terms and conditions and shall be thirty (30) days after the date of the last signature executing the Agreement. Future amendments for rate changes will also be effective thirty (30) days after the date of the last signature executing the amendment.

End User means the ultimate user of the Telecommunications Service.

FCC means the Federal Communications Commission.

General Terms and Conditions means this document including all of the terms, provisions and conditions set forth herein.

Telecommunications means the transmission, between or among points specified by the user, of information of the user's choosing, without change in the form or content of the information as sent and received.

Telecommunications Service means the offering of telecommunications for a fee directly to the public, or to such classes of users as to be effectively available directly to the public, regardless of the facilities used.

Telecommunications Act of 1996 (Act) means Public Law 104-104 of the United States Congress effective February 8, 1996. The Act amended the Communications Act of 1934 (47 U.S.C. Section 1 et. seq.).

1. CLEC Certification

1.1 Prior to execution of this Agreement, BLC Management agrees to provide BellSouth in writing BLC Management's CLEC certification for all states covered by this Agreement except Kentucky prior to BellSouth filing this Agreement with the appropriate Commission for approval.

1.2 To the extent BLC Management is not certified as a CLEC in each state covered by this Agreement as of the execution hereof, BLC Management will notify BellSouth in writing and provide CLEC certification when it becomes certified to operate in any other state covered by this Agreement. Upon notification, BellSouth will file this Agreement with the appropriate Commission for approval.

2. Term of the Agreement

2.1 The term of this Agreement shall be three years, beginning on the Effective Date and shall apply to the BellSouth territory in the state(s) of Alabama, Florida, Georgia, Kentucky, Louisiana, Mississippi, North Carolina, South Carolina, and Tennessee. Notwithstanding any prior agreement of the Parties, the rates, terms and conditions of this Agreement shall not be applied retroactively prior to the Effective Date.

2.2 The Parties agree that by no earlier than two hundred seventy (270) days and no later than one hundred and eighty (180) days prior to the expiration of this Agreement, they shall commence negotiations for a new agreement to be effective beginning on the expiration date of this Agreement (Subsequent Agreement).

2.3 If, within one hundred and thirty-five (135) days of commencing the negotiation referred to in Section 2.2 above, the Parties are unable to negotiate new terms, conditions and prices for a Subsequent Agreement, either Party may petition the Commission to establish appropriate terms, conditions and prices for the Subsequent Agreement pursuant to 47 U.S.C. 252.

2.4 If, as of the expiration of this Agreement, a Subsequent Agreement has not been executed by the Parties, this Agreement shall terminate. Upon termination of this Agreement, BellSouth shall continue to offer services to BLC Management pursuant to the terms, conditions and rates set forth in BellSouth's then current standard interconnection agreement. In the event that BellSouth's standard interconnection agreement becomes effective as between the Parties, the Parties may continue to negotiate a Subsequent Agreement or arbitrate disputed issues to reach a Subsequent Agreement as set forth in Section 2.3 above, and the terms of such Subsequent Agreement shall be effective as of the effective date as stated in the Subsequent Agreement.

3. Operational Support Systems

BLC Management shall pay charges for Operational Support Systems (OSS) as set forth in this Agreement.

4. Parity

When BLC Management purchases Telecommunications Services from BellSouth pursuant to Attachment 1 of this Agreement for the purposes of resale to End Users, such services shall be equal in quality, subject to the same conditions, and provided within the same provisioning time intervals that BellSouth provides to its Affiliates, subsidiaries and End Users. To the extent technically feasible, the quality of a Network Element, as well as the quality of the access to such Network Element provided by BellSouth to BLC Management shall be at least equal in quality to that which BellSouth provides to itself, its Affiliates or any other Telecommunications carrier. The quality of the interconnection between the network of BellSouth and the network of BLC Management shall be at a level that is equal to that which BellSouth provides itself, a subsidiary, an Affiliate, or any other party. The interconnection facilities shall be designed to meet the same technical criteria and service standards that are used within BellSouth’s network and shall extend to a consideration of service quality as perceived by BellSouth’s End Users and service quality as perceived by BLC Management.

5. White Pages Listings

5.1 BellSouth shall provide BLC Management and its customers access to white pages directory listings under the following terms:

5.1.1 Listings. BLC Management shall provide all new, changed and deleted listings on a timely basis and BellSouth or its agent will include BLC Management residential and business customer listings in the appropriate White Pages (residential and business) or alphabetical directories in the geographic areas covered by this Interconnection Agreement. Directory listings will make no distinction between BLC Management and BellSouth subscribers.

5.1.2 Rates. So long as BLC Management provides subscriber listing information (SLI) to BellSouth in accordance with Section 5.2 below, BellSouth shall provide to BLC Management one (1) primary White Pages listing per BLC Management subscriber at no charge other than applicable service order charges as set forth in BellSouth's tariffs.

5.2 Procedures for Submitting BLC Management SLI are found in The BellSouth Business Rules for Local Ordering.

5.2.1 BLC Management authorizes BellSouth to release all BLC Management SLI provided to BellSouth by BLC Management to qualifying third parties via either license agreement or BellSouth's Directory Publishers Database Service (DPDS), General Subscriber Services Tariff (GSST), Section A38.2, as the same may be amended from time to time. Such BLC Management SLI shall be intermingled with BellSouth's own customer listings and listings of any other CLEC that has authorized a similar release of SLI.

5.2.2 No compensation shall be paid to BLC Management for BellSouth's receipt of BLC Management SLI, or for the subsequent release to third parties of such SLI. In addition, to the extent BellSouth incurs costs to modify its systems to enable the release of BLC Management's SLI, or costs on an ongoing basis to administer the release of BLC Management SLI, BLC Management shall pay to BellSouth its proportionate share of the reasonable costs associated therewith. At any time that costs may be incurred to administer the release of BLC Management's SLI, BLC Management will be notified. If BLC Management does not wish to pay its proportionate share of these reasonable costs, BLC Management may instruct BellSouth that it does not wish to release its SLI to independent publishers, and BLC Management shall amend this Agreement accordingly. BLC Management will be liable for all costs incurred until the effective date of the amendment.

5.2.3 Neither BellSouth nor any agent shall be liable for the content or accuracy of any SLI provided by BLC Management under this Agreement. BLC Management shall indemnify, hold harmless and defend BellSouth and its agents from and against any damages, losses, liabilities, demands, claims, suits, judgments, costs and expenses (including but not limited to reasonable attorneys' fees and expenses) arising from BellSouth's tariff obligations or otherwise and resulting from or arising out of any third party's claim of inaccurate BLC Management listings or use of the SLI provided pursuant to this Agreement. BellSouth may forward to BLC Management any complaints received by BellSouth relating to the accuracy or quality of BLC Management listings.

5.2.4 Listings and subsequent updates will be released consistent with BellSouth system changes and/or update scheduling requirements.

5.3 Unlisted/Non-Published Subscribers. BLC Management will be required to provide to BellSouth the names, addresses and telephone numbers of all BLC Management customers who wish to be omitted from directories. Unlisted/Non-Published SLI will be subject to the rates as set forth in BellSouth's GSST.

5.4 Inclusion of BLC Management End Users in Directory Assistance Database. BellSouth will include and maintain BLC Management subscriber listings in BellSouth's Directory Assistance databases at no recurring charge and BLC Management shall provide such Directory Assistance listings to BellSouth at no recurring charge.

5.5 Listing Information Confidentiality. BellSouth will afford BLC Management's directory listing information the same level of confidentiality that BellSouth affords its own directory listing information.

5.6 Additional and Designer Listings. Additional and designer listings will be offered by BellSouth at tariffed rates as set forth in the General Subscriber Services Tariff.

5.7 Directories. BellSouth or its agent shall make available White Pages directories to BLC Management subscribers at no charge or as specified in a separate agreement with BellSouth's agent.

6. Court Ordered Requests for Call Detail Records and Other Subscriber Information

6.1 Subpoenas Directed to BellSouth. Where BellSouth provides resold services or local switching for BLC Management, BellSouth shall respond to subpoenas and court ordered requests delivered directly to BellSouth for the purpose of providing call detail records when the targeted telephone numbers belong to BLC Management End Users. Billing for such requests will be generated by BellSouth and directed to the law enforcement agency initiating the request. BellSouth shall maintain such information for BLC Management End Users for the same length of time it maintains such information for its own End Users.

6.2 Subpoenas Directed to BLC Management. Where BellSouth is providing to BLC Management Telecommunications Services for resale or providing to BLC Management the local switching function, then BLC Management agrees that in those cases where BLC Management receives subpoenas or court ordered requests regarding targeted telephone numbers belonging to BLC Management End Users, and where BLC Management does not have the requested information, BLC Management will advise the law enforcement agency initiating the request to redirect the subpoena or court ordered request to BellSouth for handling in accordance with 6.1 above.

6.3 In all other instances, where either Party receives a request for information involving the other Party's End User, the Party receiving the request will advise the law enforcement agency initiating the request to redirect such request to the other Party.

7. Liability and Indemnification

7.1 BLC Management Liability. In the event that BLC Management consists of two (2) or more separate entities as set forth in this Agreement and/or any Amendments hereto, all such entities shall be jointly and severally liable for the obligations of BLC Management under this Agreement.

7.2 Liability for Acts or Omissions of Third Parties. BellSouth shall not be liable to BLC Management for any act or omission of another Telecommunications company providing services to BLC Management.

7.3 Limitation of Liability

7.3.1 Except for any indemnification obligations of the Parties hereunder, each Party's liability to the other for any loss, cost, claim, injury, liability or expense, including reasonable attorneys' fees relating to or arising out of any negligent act or omission in its performance of this Agreement, whether in contract or in tort, shall be limited to a credit for the actual cost of the services or functions not performed or improperly performed.

7.3.2 Limitations in Tariffs. A Party may, in its sole discretion, provide in its tariffs and contracts with its End Users and third parties that relate to any service, product or function provided or contemplated under this Agreement, that to the maximum extent permitted by Applicable Law, such Party shall not be liable to the End User or third party for (i) any loss relating to or arising out of this Agreement, whether in contract, tort or otherwise, that exceeds the amount such Party would have charged that applicable person for the service, product or function that gave rise to such loss and (ii) consequential damages. To the extent that a Party elects not to place in its tariffs or contracts such limitations of liability, and the other Party incurs a loss as a result thereof, such Party shall indemnify and reimburse the other Party for that portion of the loss that would have been limited had the first Party included in its tariffs and contracts the limitations of liability that such other Party included in its own tariffs at the time of such loss.

7.3.3 Neither BellSouth nor BLC Management shall be liable for damages to the other Party's terminal location, equipment or End User premises resulting from the furnishing of a service, including, but not limited to, the installation and removal of equipment or associated wiring, except to the extent caused by a Party's negligence or willful misconduct or by a Party's failure to ground properly a local loop after disconnection.

7.3.4 Under no circumstance shall a Party be responsible or liable for indirect, incidental, or consequential damages, including, but not limited to, economic loss or lost

business or profits, damages arising from the use or performance of equipment or software, or the loss of use of software or equipment, or accessories attached thereto, delay, error, or loss of data. In connection with this limitation of liability, each Party recognizes that the other Party may, from time to time, provide advice, make recommendations, or supply other analyses related to the services or facilities described in this Agreement, and, while each Party shall use diligent efforts in this regard, the Parties acknowledge and agree that this limitation of liability shall apply to provision of such advice, recommendations, and analyses.

7.3.5 To the extent any specific provision of this Agreement purports to impose liability, or limitation of liability, on either Party different from or in conflict with the liability or limitation of liability set forth in this Section, then with respect to any facts or circumstances covered by such specific provisions, the liability or limitation of liability contained in such specific provision shall apply.

7.4 Indemnification for Certain Claims. The Party providing services hereunder, its Affiliates and its parent company, shall be indemnified, defended and held harmless by the Party receiving services hereunder against any claim, loss or damage arising from the receiving Party's use of the services provided under this Agreement pertaining to (1) claims for libel, slander or invasion of privacy arising from the content of the receiving Party's own communications, or (2) any claim, loss or damage claimed by the End User of the Party receiving services arising from such company's use or reliance on the providing Party's services, actions, duties, or obligations arising out of this Agreement.

7.5 Disclaimer. EXCEPT AS SPECIFICALLY PROVIDED TO THE CONTRARY IN THIS AGREEMENT, NEITHER PARTY MAKES ANY REPRESENTATIONS OR WARRANTIES TO THE OTHER PARTY CONCERNING THE SPECIFIC QUALITY OF ANY SERVICES, OR FACILITIES PROVIDED UNDER THIS AGREEMENT. THE PARTIES DISCLAIM, WITHOUT LIMITATION, ANY WARRANTY OR GUARANTEE OF MERCHANTABILITY OR FITNESS FOR A PARTICULAR PURPOSE, ARISING FROM COURSE OF PERFORMANCE, COURSE OF DEALING, OR FROM USAGES OF TRADE.

8. Intellectual Property Rights and Indemnification

8.1 No License. No patent, copyright, trademark or other proprietary right is licensed, granted or otherwise transferred by this Agreement. The Parties are strictly prohibited from any use, including but not limited to, in the selling, marketing, promoting or advertising of telecommunications services, of any name, service mark, logo or trademark (collectively, the "Marks") of the Other Party. The Marks include those Marks owned directly by a Party or its Affiliate(s) and those Marks that a Party has a legal and valid license to use. The Parties acknowledge that they are separate and distinct and that each provides a separate and distinct service and agree that neither Party may, expressly or impliedly, state, advertise or market that it is or offers the same service as the Other Party or engage in any

other activity that may result in a likelihood of confusion between its own service and the service of the Other Party.

8.2 Ownership of Intellectual Property. Any intellectual property that originates from or is developed by a Party shall remain the exclusive property of that Party. Except for a limited, non-assignable, non-exclusive, non-transferable license to use patents or copyrights to the extent necessary for the Parties to use any facilities or equipment (including software) or to receive any service solely as provided under this Agreement, no license in patent, copyright, trademark or trade secret, or other proprietary or intellectual property right, now or hereafter owned, controlled or licensable by a Party, is granted to the other Party. Neither shall it be implied nor arise by estoppel. Any trademark, copyright or other proprietary notices appearing in association with the use of any facilities or equipment (including software) shall remain on the documentation, material, product, service, equipment or software. It is the responsibility of each Party to ensure at no additional cost to the other Party that it has obtained any necessary licenses in relation to intellectual property of third Parties used in its network that may be required to enable the other Party to use any facilities or equipment (including software), to receive any service, or to perform its respective obligations under this Agreement.

8.3 Intellectual Property Remedies

8.3.1 Indemnification. The Party providing a service pursuant to this Agreement will defend the Party receiving such service or data provided as a result of such service against claims of infringement arising solely from the use by the receiving Party of such service in the manner contemplated under this Agreement and will indemnify the receiving Party for any damages awarded based solely on such claims in accordance with Section 7 preceding.

8.3.2 Claim of Infringement. In the event that use of any facilities or equipment (including software), becomes, or in the reasonable judgment of the Party who owns the affected network is likely to become, the subject of a claim, action, suit, or proceeding based on intellectual property infringement, then said Party shall promptly and at its sole expense and sole option, but subject to the limitations of liability set forth below:

8.3.2.1 modify or replace the applicable facilities or equipment (including software) while maintaining form and function, or

8.3.2.2 obtain a license sufficient to allow such use to continue.

8.3.2.3 In the event Section 8.3.2.1 or 8.3.2.2 are commercially unreasonable, then said Party may terminate, upon reasonable notice, this contract with respect to use of, or services provided through use of, the affected facilities or equipment (including software), but solely to the extent required to avoid the infringement claim.

8.3.3 Exception to Obligations. Neither Party's obligations under this Section shall apply to the extent the infringement is caused by: (i) modification of the facilities or

equipment (including software) by the indemnitee; (ii) use by the indemnitee of the facilities or equipment (including software) in combination with equipment or facilities (including software) not provided or authorized by the indemnitor, provided the facilities or equipment (including software) would not be infringing if used alone; (iii) conformance to specifications of the indemnitee which would necessarily result in infringement; or (iv) continued use by the indemnitee of the affected facilities or equipment (including software) after being placed on notice to discontinue use as set forth herein.

8.3.4 Exclusive Remedy. The foregoing shall constitute the Parties' sole and exclusive remedies and obligations with respect to a third party claim of intellectual property infringement arising out of the conduct of business under this Agreement.

8.4 Dispute Resolution. Any claim arising under this Section 8 shall be excluded from the dispute resolution procedures set forth in Section 10 and shall be brought in a court of competent jurisdiction.

9. Proprietary and Confidential Information

9.1 Proprietary and Confidential Information. It may be necessary for BellSouth and BLC Management, each as the "Discloser," to provide to the other Party, as "Recipient," certain proprietary and confidential information (including trade secret information) including but not limited to technical, financial, marketing, staffing and business plans and information, strategic information, proposals, request for proposals, specifications, drawings, maps, prices, costs, costing methodologies, procedures, processes, business systems, software programs, techniques, customer account data, call detail records and like information (collectively the "Information"). All such Information conveyed in writing or other tangible form shall be clearly marked with a confidential or proprietary legend. Information conveyed orally by the Discloser to Recipient shall be designated as proprietary and confidential at the time of such oral conveyance, shall be reduced to writing by the Discloser within forty-five (45) days thereafter, and shall be clearly marked with a confidential or proprietary legend.

9.2 Use and Protection of Information. Recipient agrees to protect such Information of the Discloser provided to Recipient from whatever source from distribution, disclosure or dissemination to anyone except employees of Recipient with a need to know such Information solely in conjunction with Recipient's analysis of the Information and for no other purpose except as authorized herein or as otherwise authorized in writing by the Discloser. Recipient will not make any copies of the Information inspected by it.

9.3 Exceptions. Recipient will not have an obligation to protect any portion of the Information which:

9.3.1 (a) is made publicly available by the Discloser or lawfully by a nonparty to this Agreement; (b) is lawfully obtained by Recipient from any source other than

Discloser; (c) is previously known to Recipient without an obligation to keep it confidential; or (d) is released from the terms of this Agreement by Discloser upon written notice to Recipient.

9.4 Recipient agrees to use the Information solely for the purposes of negotiations pursuant to 47 U.S.C. 251 or in performing its obligations under this Agreement and for no other entity or purpose, except as may be otherwise agreed to in writing by the Parties. Nothing herein shall prohibit Recipient from providing information requested by the FCC or a state regulatory agency with jurisdiction over this matter, or to support a request for arbitration or an allegation of failure to negotiate in good faith.

9.5 Recipient agrees not to publish or use the Information for any advertising, sales or marketing promotions, press releases, or publicity matters that refer either directly or indirectly to the Information or to the Discloser or any of its affiliated companies.

9.6 The disclosure of Information neither grants nor implies any license to the Recipient under any trademark, patent, copyright, application or other intellectual property right that is now or may hereafter be owned by the Discloser.

9.7 Survival of Confidentiality Obligations. The Parties' rights and obligations under this Section 9 shall survive and continue in effect until two (2) years after the expiration or termination date of this Agreement with regard to all Information exchanged during the term of this Agreement. Thereafter, the Parties' rights and obligations hereunder survive and continue in effect with respect to any Information that is a trade secret under applicable law.

10. Resolution of Disputes

Except as otherwise stated in this Agreement, if any dispute arises as to the interpretation of any provision of this Agreement or as to the proper implementation of this Agreement, the aggrieved Party shall petition the Commission for a resolution of the dispute. However, each Party reserves any rights it may have to seek judicial review of any ruling made by the Commission concerning this Agreement.

11. Taxes

11.1 Definition. For purposes of this Section, the terms "taxes" and "fees" shall include but not be limited to federal, state or local sales, use, excise, gross receipts or other taxes or tax-like fees of whatever nature and however designated (including tariff surcharges and any fees, charges or other payments, contractual or otherwise, for the use of public streets or rights of way, whether designated as franchise fees or otherwise) imposed, or sought to be imposed, on or with respect

to the services furnished hereunder or measured by the charges or payments therefore, excluding any taxes levied on income.

11.2 Taxes and Fees Imposed Directly On Either Providing Party or Purchasing Party.

11.2.1 Taxes and fees imposed on the providing Party, which are not permitted or required to be passed on by the providing Party to its customer, shall be borne and paid by the providing Party.

11.2.2 Taxes and fees imposed on the purchasing Party, which are not required to be collected and/or remitted by the providing Party, shall be borne and paid by the purchasing Party.

11.3 Taxes and Fees Imposed on Purchasing Party But Collected And Remitted By Providing Party.

11.3.1 Taxes and fees imposed on the purchasing Party shall be borne by the purchasing Party, even if the obligation to collect and/or remit such taxes or fees is placed on the providing Party.

11.3.2 To the extent permitted by applicable law, any such taxes and/or fees shall be shown as separate items on applicable billing documents between the Parties. Notwithstanding the foregoing, the purchasing Party shall remain liable for any such taxes and fees regardless of whether they are actually billed by the providing Party at the time that the respective service is billed.

11.3.3 If the purchasing Party determines that in its opinion any such taxes or fees are not payable, the providing Party shall not bill such taxes or fees to the purchasing Party if the purchasing Party provides written certification, reasonably satisfactory to the providing Party, stating that it is exempt or otherwise not subject to the tax or fee, setting forth the basis therefor, and satisfying any other requirements under applicable law. If any authority seeks to collect any such tax or fee that the purchasing Party has determined and certified not to be payable, or any such tax or fee that was not billed by the providing Party, the purchasing Party may contest the same in good faith, at its own expense. In any such contest, the purchasing Party shall promptly furnish the providing Party with copies of all filings in any proceeding, protest, or legal challenge, all rulings issued in connection therewith, and all correspondence between the purchasing Party and the taxing authority.

11.3.4 In the event that all or any portion of an amount sought to be collected must be paid in order to contest the imposition of any such tax or fee, or to avoid the existence of a lien on the assets of the providing Party during the pendency of such contest, the purchasing Party shall be responsible for such payment and shall be entitled to the benefit of any refund or recovery.

11.3.5 If it is ultimately determined that any additional amount of such a tax or fee is due to the imposing authority, the purchasing Party shall pay such additional amount, including any interest and penalties thereon.

11.3.6 Notwithstanding any provision to the contrary, the purchasing Party shall protect, indemnify and hold harmless (and defend at the purchasing Party's expense) the providing Party from and against any such tax or fee, interest or penalties thereon, or other charges or payable expenses (including reasonable attorney fees) with respect thereto, which are incurred by the providing Party in connection with any claim for or contest of any such tax or fee.

11.3.7 Each Party shall notify the other Party in writing of any assessment, proposed assessment or other claim for any additional amount of such a tax or fee by a taxing authority; such notice to be provided, if possible, at least ten (10) days prior to the date by which a response, protest or other appeal must be filed, but in no event later than thirty (30) days after receipt of such assessment, proposed assessment or claim.

11.4 Taxes and Fees Imposed on Providing Party But Passed On To Purchasing Party.

11.4.1 Taxes and fees imposed on the providing Party, which are permitted or required to be passed on by the providing Party to its customer, shall be borne by the purchasing Party.

11.4.2 To the extent permitted by applicable law, any such taxes and/or fees shall be shown as separate items on applicable billing documents between the Parties. Notwithstanding the foregoing, the purchasing Party shall remain liable for any such taxes and fees regardless of whether they are actually billed by the providing Party at the time that the respective service is billed.

11.4.3 If the purchasing Party disagrees with the providing Party's determination as to the application or basis for any such tax or fee, the Parties shall consult with respect to the imposition and billing of such tax or fee. Notwithstanding the foregoing, the providing Party shall retain ultimate responsibility for determining whether and to what extent any such taxes or fees are applicable, and the purchasing Party shall abide by such determination and pay such taxes or fees to the providing Party. The providing Party shall further retain ultimate responsibility for determining whether and how to contest the imposition of such taxes and fees; provided, however, that any such contest undertaken at the request of the purchasing Party shall be at the purchasing Party's expense.

11.4.4 In the event that all or any portion of an amount sought to be collected must be paid in order to contest the imposition of any such tax or fee, or to avoid the existence of a lien on the assets of the providing Party during the pendency of such contest, the purchasing Party shall be responsible for such payment and shall be entitled to the benefit of any refund or recovery.

11.4.5 If it is ultimately determined that any additional amount of such a tax or fee is due to the imposing authority, the purchasing Party shall pay such additional amount, including any interest and penalties thereon.

11.4.6 Notwithstanding any provision to the contrary, the purchasing Party shall protect, indemnify and hold harmless (and defend at the purchasing Party's expense) the providing Party from and against any such tax or fee, interest or penalties thereon, or other reasonable charges or payable expenses (including reasonable attorneys' fees) with respect thereto, which are incurred by the providing Party in connection with any claim for or contest of any such tax or fee.

11.4.7 Each Party shall notify the other Party in writing of any assessment, proposed assessment or other claim for any additional amount of such a tax or fee by a taxing authority; such notice to be provided, if possible, at least ten (10) days prior to the date by which a response, protest or other appeal must be filed, but in no event later than thirty (30) days after receipt of such assessment, proposed assessment or claim.

11.5 Mutual Cooperation. In any contest of a tax or fee by one Party, the other Party shall cooperate fully by providing records, testimony and such additional information or assistance as may reasonably be necessary to pursue the contest. Further, the other Party shall be reimbursed for any reasonable and necessary out-of-pocket copying and travel expenses incurred in assisting in such contest.

12. Force Majeure

In the event performance of this Agreement, or any obligation hereunder, is either directly or indirectly prevented, restricted, or interfered with by reason of fire, flood, earthquake or like acts of God, wars, revolution, civil commotion, explosion, acts of public enemy, embargo, acts of the government in its sovereign capacity, labor difficulties, including without limitation, strikes, slowdowns, picketing, or boycotts, unavailability of equipment from vendor, changes requested by BLC Management, or any other circumstances beyond the reasonable control and without the fault or negligence of the Party affected, the Party affected, upon giving prompt notice to the other Party, shall be excused from such performance on a day-to-day basis to the extent of such prevention, restriction, or interference (and the other Party shall likewise be excused from performance of its obligations on a day-to-day basis until the delay, restriction or interference has ceased); provided, however, that the Party so affected shall use diligent efforts to avoid or remove such causes of non-performance and both Parties shall proceed whenever such causes are removed or cease.

13. Adoption of Agreements

BellSouth shall make available, pursuant to 47 USC § 252 and the FCC rules and regulations regarding such availability, to BLC Management any interconnection, service, or network element provided under any other agreement filed and approved pursuant to 47 USC § 252, provided a minimum of six months remains on the term of such agreement. The Parties shall adopt all rates, terms and conditions concerning such other interconnection, service or network element and any other rates, terms and conditions that are legitimately related to or were negotiated in exchange for or in conjunction with the interconnection, service or

network element being adopted. The adopted interconnection, service, or network element and agreement shall apply to the same states as such other agreement. The term of the adopted agreement or provisions shall expire on the same date as set forth in the agreement that was adopted.

14. Modification of Agreement

14.1 If BLC Management changes its name or makes changes to its company structure or identity due to a merger, acquisition, transfer or any other reason, it is the responsibility of BLC Management to notify BellSouth of said change and request that an amendment to this Agreement, if necessary, be executed to reflect said change.

14.2 No modification, amendment, supplement to, or waiver of the Agreement or any of its provisions shall be effective and binding upon the Parties unless it is made in writing and duly signed by the Parties.

14.3 In the event that any effective legislative, regulatory, judicial or other legal action materially affects any material terms of this Agreement, or the ability of BLC Management or BellSouth to perform any material terms of this Agreement, BLC Management or BellSouth may, on thirty (30) days' written notice, require that such terms be renegotiated, and the Parties shall renegotiate in good faith such mutually acceptable new terms as may be required. In the event that such new terms are not renegotiated within ninety (90) days after such notice, the Dispute shall be referred to the Dispute Resolution procedure set forth in this Agreement.

15. Non-waiver of Legal Rights

Execution of this Agreement by either Party does not confirm or imply that the executing Party agrees with any decision(s) issued pursuant to the Telecommunications Act of 1996 and the consequences of those decisions on specific language in this Agreement. Neither Party waives its rights to appeal or otherwise challenge any such decision(s) and each Party reserves all of its rights to pursue any and all legal and/or equitable remedies, including appeals of any such decision(s).

16. Indivisibility

The Parties intend that this Agreement be indivisible and nonseverable, and each of the Parties acknowledges that it has assented to all of the covenants and promises in this Agreement as a single whole and that all of such covenants and promises, taken as a whole, constitute the essence of the contract. Without limiting the generality of the foregoing, each of the Parties acknowledges that any provision by BellSouth of collocation space under this Agreement is solely for the purpose of facilitating the provision of other services under this Agreement and that neither Party would have contracted with respect to the provisioning of collocation space under this Agreement if the covenants and promises of the other Party with respect to the other services provided under this Agreement had not been made. The

Parties further acknowledge that this Agreement is intended to constitute a single transaction, that the obligations of the Parties under this Agreement are interdependent, and that payment obligations under this Agreement are intended to be recouped against other payment obligations under this Agreement.

17. Waivers

A failure or delay of either Party to enforce any of the provisions hereof, to exercise any option which is herein provided, or to require performance of any of the provisions hereof shall in no way be construed to be a waiver of such provisions or options, and each Party, notwithstanding such failure, shall have the right thereafter to insist upon the performance of any and all of the provisions of this Agreement.

18. Governing Law

Where applicable, this Agreement shall be governed by and construed in accordance with federal and state substantive telecommunications law, including rules and regulations of the FCC and appropriate Commission. In all other respects, this Agreement shall be governed by and construed and enforced in accordance with the laws of the State of Georgia without regard to its conflict of laws principles.

19. Assignments

Any assignment by either Party to any non-affiliated entity of any right, obligation or duty, or of any other interest hereunder, in whole or in part, without the prior written consent of the other Party shall be void. A Party may assign this Agreement in its entirety to an Affiliate of the Party without the consent of the other Party; provided, however, that the assigning Party shall notify the other Party in writing of such assignment thirty (30) days prior to the Effective Date thereof and, provided further, if the assignee is an assignee of BLC Management, the assignee must provide evidence of Commission CLEC certification. The Parties shall amend this Agreement to reflect such assignments and shall work cooperatively to implement any changes required due to such assignment. All obligations and duties of any Party under this Agreement shall be binding on all successors in interest and assigns of such Party. No assignment or delegation hereof shall relieve the assignor of its obligations under this Agreement in the event that the assignee fails to perform such obligations. Notwithstanding anything to the contrary in this Section, BLC Management shall not assign this Agreement to any Affiliate or non-affiliated entity unless either (1) BLC Management pays all bills, past due and current, under this Agreement, or (2) BLC Management's assignee expressly assumes liability for payment of such bills.

20. Notices

20.1 Every notice, consent, approval, or other communications required or contemplated by this Agreement shall be in writing and shall be delivered by hand, by overnight courier or by US mail postage prepaid, address to:

BellSouth Telecommunications, Inc.

BellSouth Local Contract Manager
600 North 19th Street, 8th floor
Birmingham, AL 35203

and

ICS Attorney
Suite 4300
675 West Peachtree Street
Atlanta, GA 30375

BLC Management LLC dba Angles Communication Solutions

Brian Cox
Angles Communication Solutions
7850 Stage Hills Blvd, Suite 108
Memphis, Tennessee 38133

or at such other address as the intended recipient previously shall have designated by written notice to the other Party.

20.2 Unless otherwise provided in this Agreement, notice by mail shall be effective on the date it is officially recorded as delivered by return receipt or equivalent, and in the absence of such record of delivery, it shall be presumed to have been delivered the fifth day, or next business day after the fifth day, after it was deposited in the mails.

20.3 BellSouth will post changes to business processes and policies, not requiring an amendment to this Agreement, notices required to be posted to BellSouth's website, and any other information of general applicability to CLECs.

21. Rule of Construction

No rule of construction requiring interpretation against the drafting Party hereof shall apply in the interpretation of this Agreement.

22. Headings of No Force or Effect

The headings of Articles and Sections of this Agreement are for convenience of reference only, and shall in no way define, modify or restrict the meaning or interpretation of the terms or provisions of this Agreement.

23. Multiple Counterparts

This Agreement may be executed in multiple counterparts, each of which shall be deemed an original, but all of which shall together constitute but one and the same document.

24. Filing of Agreement

Upon execution of this Agreement it shall be filed with the appropriate state regulatory agency pursuant to the requirements of Section 252 of the Act, and the Parties shall share equally any filing fees therefor. If the regulatory agency imposes any filing or public interest notice fees regarding the filing or approval of the Agreement, BLC Management shall be responsible for publishing the required notice and the publication and/or notice costs shall be borne by BLC Management. Notwithstanding the foregoing, this Agreement shall not be submitted for approval by the appropriate state regulatory agency unless and until such time as BLC Management is duly certified as a local exchange carrier in such state, except as otherwise required by a Commission.

25. Compliance with Applicable Law

Each Party shall comply at its own expense with Applicable Law.

26. Necessary Approvals

Each Party shall be responsible for obtaining and keeping in effect all approvals from, and rights granted by, governmental authorities, building and property owners, other carriers, and any other persons that may be required in connection with the performance of its obligations under this Agreement. Each Party shall reasonably cooperate with the other Party in obtaining and maintaining any required approvals and rights for which such Party is responsible.

27. Good Faith Performance

Each Party shall act in good faith in its performance under this Agreement and, in each case in which a Party's consent or agreement is required or requested hereunder, such Party shall not unreasonably withhold or delay such consent or agreement.

28. Nonexclusive Dealings

This Agreement does not prevent either Party from providing or purchasing services to or from any other person nor, except as provided in Section 252(i) of the Act, does it obligate either Party to provide or purchase any services (except insofar as the Parties are obligated to provide access to Interconnection, services and Network Elements to BLC Management as a requesting carrier under the Act).

29. Rate True-Up

29.1 This section applies to Network Interconnection and/or Unbundled Network Elements and Other Services rates that are expressly subject to true-up under this Agreement**.**

29.2 The designated true-up rates shall be trued-up, either up or down, based on final prices determined either by further agreement between the Parties, or by a final order (including any appeals) of the Commission. The Parties shall implement the true-up by comparing the actual volumes and demand for each item, together with the designated true-up rates for each item, with the final prices determined for each item. Each Party shall keep its own records upon which the true-up can be based, and any final payment from one Party to the other shall be in an amount agreed upon by the Parties based on such records. In the event of any disagreement as between the records or the Parties regarding the amount of such true-up, the Parties shall submit the matter to the Dispute Resolution process in accordance with the provisions of this Agreement.

29.3 An effective order of the Commission that forms the basis of a true-up shall be based upon cost studies submitted by either or both Parties to the Commission and shall be binding upon BellSouth and BLC Management specifically or upon all carriers generally, such as a generic cost proceeding.

30. Survival

The Parties' obligations under this Agreement which by their nature are intended to continue beyond the termination or expiration of this Agreement shall survive the termination or expiration of this Agreement.

31. Entire Agreement

31.1 This Agreement means the General Terms and Conditions, the Attachments identified in Section 31.2 below, and all documents identified therein, as such may be amended from time to time and which are incorporated herein by reference, all of which, when taken together, are intended to constitute one indivisible agreement. This Agreement sets forth the entire understanding and supersedes prior agreements between the Parties relating to the subject matter contained in this Agreement and merges all prior discussions between them. Any orders placed under prior agreements between the Parties shall be governed by the terms of this Agreement and BLC Management acknowledges and agrees that any and all amounts and obligations owed for services provisioned or orders placed under prior agreements between the Parties, related to the subject matter hereof, shall be due and owing under this Agreement and be governed by the terms and conditions of this Agreement as if such services or orders were provisioned or placed under this Agreement. Neither Party shall be bound by any definition, condition, provision, representation, warranty, covenant or promise other than as expressly

stated in this Agreement or as is contemporaneously or subsequently set forth in writing and executed by a duly authorized officer or representative of the Party to be bound thereby.

31.2 This Agreement includes Attachments with provisions for the following:

Resale
Network Elements and Other Services
Network Interconnection
Collocation
Access to Numbers and Number Portability
Pre-Ordering, Ordering, Provisioning, Maintenance and Repair
Billing
Rights-of-Way, Conduits and Pole Attachments
Performance Measurements
BellSouth Disaster Recovery Plan
Bona Fide Request/New Business Request Process

31.3 The following services are included as options for purchase by BLC Management pursuant to the terms and conditions set forth in this Agreement. BLC Management may elect to purchase said services by written request to its Local Contract Manager if applicable:

Optional Daily Usage File (ODUF)
Enhanced Optional Daily Usage File (EODUF)
Access Daily Usage File (ADUF)
Line Information Database (LIDB) Storage
Centralized Message Distribution Service (CMDS)
Calling Name (CNAM)
LNP Data Base Query Service

IN WITNESS WHEREOF, the Parties have executed this Agreement the day and year written below.

BellSouth Telecommunications, Inc.

By: [signature]

Name: Kristen E. Rowe

Title: Director

Date: 1/30/04

BLC Management LLC dba Angles Communication Solutions

By: [signature]

Name: K. Brian Cox

Title: President / CEO

Date: 1/26/04

Version 3Q03: 11/12/2003

Attachment 1

Resale

Table of Contents

1. Discount Rates 3

2. Definition of Terms 3

3. General Provisions 4

4. BellSouth's Provision of Services to BLC Management 8

5. Maintenance of Services 9

6. Establishment of Service 10

7. Discontinuance of Service 10

8. Operator Services (Operator Call Processing and Directory Assistance) 11

9. Line Information Database (LIDB) 13

10. RAO Hosting 14

11. Optional Daily Usage File (ODUF) 14

12. Enhanced Optional Daily Usage File (EODUF) 14

Resale Restrictions **Exhibit A**

Line Information Database (LIDB) Storage Agreemt **Exhibit B**

Optional Daily Usage File (ODUF) **Exhibit C**

Enhanced Option Daily Usage File (EODUF) **Exhibit D**

Resale Discounts and Rates **Exhibit E**

RESALE

1. Discount Rates

1.1 The discount rates applied to BLC Management purchases of BellSouth Telecommunications Services for the purpose of resale shall be as set forth in Exhibit E. Such discounts have been determined by the applicable Commission to reflect the costs avoided by BellSouth when selling a service for wholesale purposes.

1.2 The telecommunications services available for purchase by BLC Management for the purposes of resale to BLC Management's End Users shall be available at BellSouth's tariffed rates less the discount set forth in Exhibit E to this Agreement and subject to the exclusions and limitations set forth in Exhibit A to this Agreement.

2. Definition of Terms

2.1 COMPETITIVE LOCAL EXCHANGE COMPANY (CLEC) means a telephone company certificated by the Commission to provide local exchange service within BellSouth's franchised area.

2.2 CUSTOMER OF RECORD means the entity responsible for placing application for service; requesting additions, rearrangements, maintenance or discontinuance of service; payment in full of charges incurred such as non-recurring, monthly recurring, toll, directory assistance, etc.

2.3 DEPOSIT means assurance provided by a customer in the form of cash, surety bond or bank letter of credit to be held by BellSouth.

2.4 END USER means the ultimate user of the Telecommunications Service.

2.5 END USER CUSTOMER LOCATION means the physical location of the premises where an End User makes use of the telecommunications services.

2.6 NEW SERVICES means functions, features or capabilities that are not currently offered by BellSouth. This includes packaging of existing services or combining a new function, feature or capability with an existing service.

2.7 RESALE means an activity wherein a certificated CLEC, such as BLC Management, subscribes to the telecommunications services of BellSouth and then offers those telecommunications services to the public.

3. General Provisions

3.1 All of the negotiated rates, terms and conditions set forth in this Attachment pertain to the resale of BellSouth's retail telecommunications services and other services specified in this Attachment. Subject to effective and applicable FCC and Commission rules and orders, BellSouth shall make available to BLC Management for resale those telecommunications services BellSouth makes available, pursuant to its General Subscriber Services Tariff and Private Line Services Tariff, to customers who are not telecommunications carriers.

3.1.1 When BLC Management provides Resale service in a cross boundary area (areas that are part of the local serving area of another state's exchange) the rates, regulations and discounts for the tariffing state will apply. Billing will be from the serving state.

3.1.2 In Tennessee, if BLC Management does not resell Lifeline service to any end users, and if BLC Management agrees to order an appropriate Operator Services/Directory Assistance block as set forth in BellSouth's General Subscriber Services Tariff, the discount shall be 21.56%.

3.1.2.1 In the event BLC Management resells Lifeline service to any end user in Tennessee, BellSouth will begin applying the 16% discount rate to all services. Upon BLC Management and BellSouth's implementation of a billing arrangement whereby a separate Master Account (Q-account) associated with a separate Operating Customer Number (OCN) is established for billing of Lifeline service end users, the discount shall be applied as set forth in 3.1.2 preceding for the non-Lifeline affected Master Account (Q-account).

3.1.2.2 BLC Management must provide written notification to BellSouth within 30 days prior to either providing its own operator services/ directory services or orders the appropriate operator services/directory assistance blocking, to qualify for the higher discount rate of 21.56%.

3.2 BLC Management may purchase resale services from BellSouth for its own use in operating its business. The resale discount will apply to those services under the following conditions:

3.2.1 BLC Management must resell services to other End Users.

3.2.2 BLC Management cannot be a competitive local exchange telecommunications company for the single purpose of selling to itself.

3.3 BLC Management will be the customer of record for all services purchased from BellSouth. Except as specified herein, BellSouth will take orders from, bill and receive payment from BLC Management for said services.

3.4 BLC Management will be BellSouth's single point of contact for all services purchased pursuant to this Agreement. BellSouth shall have no contact with the End User except to the extent provided for herein. Each Party shall provide to the other a nation wide (50 states) toll-free contact number for purposes of repair and maintenance.

3.5 BellSouth will continue to bill the End User for any services that the End User specifies it wishes to receive directly from BellSouth. BellSouth maintains the right to serve directly any End User within the service area of BLC Management. BellSouth will continue to market directly its own telecommunications products and services and in doing so may establish independent relationships with End Users of BLC Management. Neither Party shall interfere with the right of any person or entity to obtain service directly from the other Party.

3.5.1 When an End User of BLC Management or BellSouth elects to change his/her carrier to the other Party, both Parties agree to release the End User's service to the other Party concurrent with the due date of the service order, which shall be established based on the standard interval for the End User's requested service as set forth in the BellSouth Product and Services Interval Guide.

3.5.2 BellSouth and BLC Management will refrain from contacting an End User who has placed or whose selected carrier has placed on the End User's behalf an order to change the End User's service provider from BellSouth or BLC Management to the other Party until such time that the order for service has been completed.

3.6 Current telephone numbers may normally be retained by the End User and are assigned to the service furnished. However, neither Party nor the End User has a property right to the telephone number or any other call number designation associated with services furnished by BellSouth, and no right to the continuance of service through any particular central office. BellSouth reserves the right to change such numbers, or the central office designation associated with such numbers, or both, whenever BellSouth deems it necessary to do so in the conduct of its business and in accordance with BellSouth practices and procedures on a nondiscriminatory basis.

3.7 Where BellSouth provides resold services to BLC Management, BellSouth will provide BLC Management with on-line access to intermediate telephone numbers as defined by applicable FCC rules and regulations on a first come first served basis. BLC Management acknowledges that such access to numbers shall be in accordance with the appropriate FCC rules and regulations. BLC Management acknowledges that there may be instances where there is a shortage of telephone numbers in a particular Common Language Location Identifier Code (CLLIC); and in such instances, BLC Management shall return unused intermediate telephone numbers to BellSouth upon BellSouth's request. BellSouth shall make all such requests on a nondiscriminatory basis.

3.8 BellSouth will allow BLC Management to designate up to 100 intermediate telephone numbers per CLLIC, for BLC Management's sole use. Assignment, reservation and use of telephone numbers shall be governed by applicable FCC rules and regulations. BLC Management acknowledges that there may be instances where there is a shortage of telephone numbers in a particular CLLIC and BellSouth has the right to limit access to blocks of intermediate telephone numbers. These instances include: 1) where jeopardy status has been declared by the North American Numbering Plan (NANP) for a particular Numbering Plan Area (NPA); or 2) where a rate center has less than six months supply of numbering resources.

3.9 Service is furnished subject to the condition that it will not be used for any unlawful purpose.

3.10 Service will be discontinued if any law enforcement agency advises that the service being used is in violation of the law.

3.11 BellSouth can refuse service when it has grounds to believe that service will be used in violation of the law.

3.12 BellSouth will cooperate with law enforcement agencies with subpoenas and court orders relating to BLC Management's End Users, pursuant to Section 6 of the General Terms and Conditions.

3.13 If BLC Management or its End Users utilize a BellSouth resold telecommunications service in a manner other than that for which the service was originally intended as described in BellSouth's retail tariffs, BLC Management has the responsibility to notify BellSouth. BellSouth will only provision and maintain said service consistent with the terms and conditions of the tariff describing said service.

3.14 Facilities and/or equipment utilized by BellSouth to provide service to BLC Management remain the property of BellSouth.

3.15 White page directory listings for BLC Management End Users will be provided in accordance with Section 5 of the General Terms and Conditions.

3.16 Service Ordering and Operational Support Systems (OSS)

3.16.1 BLC Management must order services through resale interfaces, i.e., the Local Carrier Service Center (LCSC) and/or appropriate Complex Resale Support Group (CRSG) pursuant to this Agreement. BellSouth has developed and made available the interactive interfaces by which BLC Management may submit a Local Service Request (LSR) electronically as set forth in Attachment 2 of this Agreement. Service orders will be in a standard format designated by BellSouth.

3.16.2 LSRs submitted by means of one of these interactive interfaces will incur an OSS electronic charge as set forth in Exhibit E to this Agreement. An individual LSR will be identified for billing purposes by its Purchase Order Number (PON). LSRs submitted by means other than one of these interactive interfaces (Mail, fax, courier, etc.) will incur a manual order charge as set forth in Exhibit E to this Agreement. Supplements or clarifications to a previously billed LSR will not incur another OSS charge.

3.16.3 Denial/Restoral OSS Charge. In the event BLC Management provides a list of customers to be denied and restored, rather than an LSR, each location on the list will require a separate PON and therefore will be billed as one LSR per location.

3.16.4 Cancellation OSS Charge. BLC Management will incur an OSS charge for an accepted LSR that is later canceled.

3.17 Where available to BellSouth's End Users, BellSouth shall provide the following telecommunications services at a discount to allow for voice mail services**:**

- Message Waiting Indicator ("MWI"), stutter dialtone and message waiting light feature capabilities
- Call Forward Busy Line ("CF/B")
- Call Forward Don't Answer ("CF/DA")

Further, BellSouth messaging services set forth in BellSouth's Messaging Service Information Package shall be made available for resale without the wholesale discount.

3.18 BellSouth shall provide branding for, or shall unbrand, voice mail services for BLC Management per the Bona Fide Request/New Business Request process as set forth in Attachment 6 of this Agreement.

3.19 BellSouth's Inside Wire Maintenance Service Plan is available for resale at rates, terms and conditions as set forth by BellSouth and without the wholesale discount.

3.20 In the event BLC Management acquires an end user whose service is provided pursuant to a BellSouth Special Assembly, BellSouth shall make available to BLC Management that Special Assembly at the wholesale discount at BLC Management's option. BLC Management shall be responsible for all terms and conditions of such Special Assembly including but not limited to termination liability if applicable.

3.21 BellSouth shall provide 911/E911 for BLC Management customers in the same manner that it is provided to BellSouth customers. BellSouth shall provide and validate BLC Management customer information to the PSAP. BellSouth shall use its service order process to update and maintain, on the same schedule that it uses

for its customers, the BLC Management customer service information in the ALI/DMS (Automatic Location Identification/Location Information) databases used to support 911/E911 services.

3.22 BellSouth shall bill, and BLC Management shall pay, the End User line charge associated with implementing Number Portability as set forth in BellSouth's FCC No. 1 tariff. This charge is not subject to the wholesale discount.

3.23 Pursuant to 47 CFR Section 51.617, BellSouth shall bill to BLC Management, and BLC Management shall pay, the End User common line charges identical to the End User common line charges BellSouth bills its End Users.

4. BellSouth's Provision of Services to BLC Management

4.1 Resale of BellSouth services shall be as follows:

4.1.1 The resale of telecommunications services shall be limited to users and uses conforming to the class of service restrictions.

4.1.2 Hotel and Hospital PBX services are the only telecommunications services available for resale to Hotel/Motel and Hospital End Users, respectively. Similarly, Access Line Service for Customer Provided Coin Telephones is the only local service available for resale to Payphone Service Provider (PSP) customers. Shared Tenant Service customers can only be sold those local exchange access services available in BellSouth's A23 Shared Tenant Service Tariff in the states of Florida, Georgia, North Carolina and South Carolina, and in A27 in the states of Alabama, Kentucky, Louisiana, Mississippi and Tennessee.

4.1.3 BellSouth reserves the right to periodically audit services purchased by BLC Management to establish authenticity of use. Such audit shall not occur more than once in a calendar year. BLC Management shall make any and all records and data available to BellSouth or BellSouth's auditors on a reasonable basis. BellSouth shall bear the cost of said audit. Any information provided by BLC Management for purposes of such audit shall be deemed Confidential Information pursuant to the General Terms and Conditions of this Agreement.

4.2 Subject to Exhibit A hereto, resold services can only be used in the same manner as specified in BellSouth's Tariffs. Resold services are subject to the same terms and conditions as are specified for such services when furnished to an individual End User of BellSouth in the appropriate section of BellSouth's Tariffs. Specific tariff features (e.g. a usage allowance per month) shall not be aggregated across multiple resold services.

4.3 BLC Management may resell services only within the specific service area as defined in its certificate of operation approved by the Commission.

4.4 If BLC Management cancels an order for resold services, any costs incurred by BellSouth in conjunction with provisioning of such order will be recovered in accordance with BellSouth's General Subscriber Services Tariffs and Private Line Services Tariffs.

4.5 Service Jointly Provisioned with an Independent Company or Competitive Local Exchange Company Areas

4.5.1 BellSouth will in some instances provision resold services in accordance with the General Subscriber Services Tariff and Private Line Tariffs jointly with an Independent Company or other Competitive Local Exchange Carrier.

4.5.2 When BLC Management assumes responsibility for such service, all terms and conditions defined in the Tariff will apply for services provided within the BellSouth service area only.

4.5.3 Service terminating in an Independent Company or other Competitive Local Exchange Carrier area will be provisioned and billed by the Independent Company or other Competitive Local Exchange Carrier directly to BLC Management.

4.5.4 BLC Management must establish a billing arrangement with the Independent Company or other Competitive Local Exchange Carrier prior to assuming an end user account where such circumstances apply.

4.5.5 Specific guidelines regarding such services are available on BellSouth's website @ www.interconnection.bellsouth.com.

5. Maintenance of Services

5.1 Services resold pursuant to this Attachment and BellSouth's General Subscriber Service Tariff and Private Line Service Tariff and facilities and equipment provided by BellSouth shall be maintained by BellSouth.

5.2 BLC Management or its End Users may not rearrange, move, disconnect, remove or attempt to repair any facilities owned by BellSouth except with the written consent of BellSouth.

5.3 BLC Management accepts responsibility to notify BellSouth of situations that arise that may result in a service problem.

5.4 BLC Management will contact the appropriate repair centers in accordance with procedures established by BellSouth.

5.5 For all repair requests, BLC Management shall adhere to BellSouth's prescreening guidelines prior to referring the trouble to BellSouth.

5.6 BellSouth will bill BLC Management for handling troubles that are found not to be in BellSouth's network pursuant to its standard time and material charges. The standard time and material charges will be no more than what BellSouth charges to its retail customers for the same services.

5.7 BellSouth reserves the right to contact BLC Management's End Users, if deemed necessary, for maintenance purposes.

6. Establishment of Service

6.1 After receiving certification as a local exchange carrier from the applicable regulatory agency, BLC Management will provide the appropriate BellSouth Advisory team manager the necessary documentation to enable BellSouth to establish accounts for resold services ("master account"). BLC Management is required to provide the following before a master account is established: blanket letter of authorization, misdirected number form, proof of PSC/PUC certification, the Application for Master Account, an Operating Company Number ("OCN") assigned by the National Exchange Carriers Association ("NECA") and a deposit and tax exemption certificate, if applicable.

6.1.1 If BLC Management needs to change its OCN(s) under which it operates when BLC Management has already bee conducting business utilizing those OCN(s), BLC Management shall bear all costs incurred by BellSouth to convert BLC Management BLC Management to the new OCN(s). OCN conversion charges include all time required to make system updates to all of BLC Management's end user customer records. Appropriate charges will appear in the OC&C section of BLC Management's bill.

6.2 BLC Management shall provide to BellSouth a blanket letter of authorization ("LOA") certifying that BLC Management will have End User authorization prior to viewing the End User's customer service record or switching the End User's service. BellSouth will not require End User confirmation prior to establishing service for BLC Management's End User customer.

6.3 BellSouth will accept a request directly from the End User for conversion of the End User's service from BLC Management to BellSouth or will accept a request from another CLEC for conversion of the End User's service from BLC Management to such other CLEC. Upon completion of the conversion BellSouth will notify BLC Management that such conversion has been completed.

7. Discontinuance of Service

7.1 The procedures for discontinuing service to an End User are as follows:

7.1.1 BellSouth will deny service to BLC Management's End User on behalf of, and at the request of, BLC Management. Upon restoration of the End User's service, restoral charges will apply and will be the responsibility of BLC Management.

7.1.2 At the request of BLC Management, BellSouth will disconnect a BLC Management End User customer.

7.1.3 All requests by BLC Management for denial or disconnection of an End User for nonpayment must be in writing.

7.1.4 BLC Management will be made solely responsible for notifying the End User of the proposed disconnection of the service.

7.1.5 BellSouth will continue to process calls made to the Annoyance Call Center and will advise BLC Management when it is determined that annoyance calls are originated from one of its End User's locations. BellSouth shall be indemnified, defended and held harmless by BLC Management and/or the End User against any claim, loss or damage arising from providing this information to BLC Management. It is the responsibility of BLC Management to take the corrective action necessary with its End Users who make annoying calls. (Failure to do so will result in BellSouth's disconnecting the End User's service.)

8. Operator Services (Operator Call Processing and Directory Assistance)

8.1 Operator Call Processing provides: (1) operator handling for call completion (for example, collect, third number billing, and manual calling-card calls). (2) operator or automated assistance for billing after the end user has dialed the called number (for example, calling card calls); and (3) special services including but not limited to Busy Line Verification and Emergency Line Interrupt (ELI), Emergency Agency Call and Operator-assisted Directory Assistance.

8.1 Upon request for BellSouth Operator Call Processing, BellSouth shall:

8.1.1 . Process 0+ and 0- dialed local calls

8.1.3 .2 Process 0+ and 0- intraLATA toll calls.

8.1.4 Process calls that are billed to BLC Management end user's calling card that can be validated by BellSouth.

8.1.5 Process person-to-person calls.

8.1.6 Process collect calls.

8.1.7 Provide the capability for callers to bill a third party and shall also process such calls.

8.1.8 Process station-to-station calls.

8.1.9 Process Busy Line Verify and Emergency Line Interrupt requests.

8.1.10 Process emergency call trace originated by Public Safety Answering Points.

8.1.11 Process operator-assisted directory assistance calls.

8.1.12 Adhere to equal access requirements, providing BLC Management local end users the same IXC access that BellSouth provides its own operator service.

8.1.13 Exercise at least the same level of fraud control in providing Operator Service to BLC Management that BellSouth provides for its own operator service.

8.1.14 Perform Billed Number Screening when handling Collect, Person-to-Person, and Billed-To-Third-Party calls.

8.1.15 Direct customer account and other similar inquiries to the customer service center designated by BLC Management.

8.1.16 Provide call records to BLC Management in accordance with ODUF standards.

8.1.17 The interface requirements shall conform to the interface specifications for the platform used to provide Operator Services as long as the interface conforms to industry standards.

8.2 Directory Assistance Service

8.2.1 Directory Assistance Service provides local and non-local end user telephone number listings with the option to complete the call at the caller's direction separate and distinct from local switching.

8.2.2 Directory Assistance Service shall provide up to two listing requests per call, if available and if requested by BLC Management's end user. BellSouth shall provide caller-optional directory assistance call completion service at rates set forth in BellSouth's General Subscriber Services Tariff to one of the provided listings.

8.3.1 Directory Assistance Service Updates

8.3.1 BellSouth shall update end user listings changes daily. These changes include:

8.3.2 New end user connections

8.3.3 End user disconnections

8.3.4 End user address changes

8.3.5 These updates shall also be provided for non-listed and non-published numbers for use in emergencies.

8.4. Selective Call Routing using Line Class Codes (SCR-LCC)

8.4.1 Where BLC Management resells BellSouth's services and utilizes an operator services provider other than BellSouth, BellSouth will route BLC Management's end user calls to that provider through Selective Call Routing.

8.4.2 Selective Call Routing using Line Class Codes (SCR-LCC) provides the capability for BLC Management to have its Operator Call Processing and Directory Assistance (OCP/DA) calls routed to BellSouth's OCP/DA platform for BellSouth provided Custom Branded or Unbranded OCP/DA or to its own or an alternate OCP/DA platform for Self-Branded OCP/DA. SCR-LCC is only available if line class code capacity is available in the requested BellSouth end office switches.

8.4.3 Custom Branding for DA is not available for certain classes of service, including but not limited to Hotel/Motel services, WATS service and certain PBX services.

8.4.4 Where available, BLC Management specific and unique LLCs are programmed in each BellSouth end office switch where BLC Management intends to service end users with customized OCP/DA branding. The LCCs specifically identify BLC Management's end users so OCP/DA calls can be routed over the appropriate trunk group to the requested OCP/DA platform. Additional line class codes are required in each end office if the end office serves multiple NPAs (i.e., a unique LCC is required per NPA), and/or if the end office switch serves multiple rate areas and BLC Management intends to provide BLC Management-branded OCP/DA to its end users in these multiple rate areas.

8.4.5 SCR-LCC supporting Custom Branding and Self Branding require BLC Management to order dedicated transport and trunking from each BellSouth end office identified by BLC Management, either to the BellSouth Traffic Operator Position System (TOPS) for Custom Branding or to the BLC Management Operator Service Provider for Self Branding. Separate trunk groups are required for OCP/DA. Rates for transport and trunks are set forth in applicable BellSouth Tariffs.

8.4.6 The rates for SCR-LCC are as set forth in Exhibit E of this Attachment. There is a nonrecurring charge for the establishment of each LCC in each BellSouth central office.

8.4.7 Unbranded DA and/or OCP calls ride common trunk groups provisioned by BellSouth from those end offices identified by BLC Management to the BellSouth Tops. The calls are routed to "No Announcement."

9. Line Information Database (LIDB)

9.1 BellSouth will store in its Line Information Database (LIDB) records relating to service only in the BellSouth region. The LIDB Storage Agreement is included in this Attachment as Exhibit B.

9.2 BellSouth will provide LIDB Storage upon written request to BLC Management's Account Manager stating a requested activation date.

10. RAO Hosting

10.1 RAO Hosting is not required for resale in the BellSouth region.

11. Optional Daily Usage File (ODUF)

11.1 The Optional Daily Usage File (ODUF) Agreement with terms and conditions is included in this Attachment as Exhibit C. Rates for ODUF are as set forth in Exhibit E of this Attachment.

11.2. BellSouth will provide ODUF service upon written request to its Account Manager stating a requested activation date.

12. Enhanced Optional Daily Usage File (EODUF)

12.1 The Enhanced Optional Daily Usage File (EODUF) service Agreement with terms and conditions is included in this Attachment as Exhibit D. Rates for EODUF are as set forth in Exhibit E of this Attachment.

12.2 BellSouth will provide EODUF service upon written request to its Account Manager stating a requested activation date.

EXCLUSIONS AND LIMITATIONS ON SERVICES AVAILABLE FOR RESALE (Note 3)

	Type of Service	AL		FL		GA		KY		LA		MS		NC		SC		TN	
		Resale	Discount	Resale	Discount	Resale	Discount	Resale	Discount	Resale	Discount	Resale	Discount	Resale	Discount	Resale	Discount	Resale	Discount
1	Grandfathered Services (Note 1)	Yes	Yes	Yes	Yes	Yes	Yes	Yes	Yes	Yes	Yes	Yes	Yes	Yes	Yes	Yes	Yes	Yes	Yes
2	Promotions - > 90 Days(Note 2)	Yes	Yes	Yes	Yes	Yes	Yes	Yes	Yes	Yes	Yes	Yes	Yes	Yes	Yes	Yes	Yes	Yes	Yes
3	Promotions - ≤ 90 Days (Note 2)	Yes	No	Yes	No	Yes	No	Yes	No	Yes	No	Yes	No	Yes	No	Yes	No	Yes	No
4	Lifeline/Link Up Services	Yes	Yes	Yes	Yes	Yes	Yes	No	No	Yes	Yes	Yes	Yes	Yes	Yes	Yes	Yes	Yes	Yes
5	911/E911 Services	Yes	Yes	Yes	Yes	Yes	Yes	Yes	Yes	No	No	Yes	Yes	Yes	Yes	Yes	Yes	Yes	Yes
6	N11 Services	Yes	Yes	Yes	Yes	Yes	Yes	No	No	No	No	Yes	Yes	Yes	Yes	No	No	Yes	Yes
7	MemoryCall®Service	Yes	No	Yes	No	Yes	No	Yes	No	Yes	No	Yes	No	Yes	No	Yes	No	Yes	No
8	Mobile Services	Yes	No	Yes	No	Yes	No	Yes	No	Yes	No	Yes	No	Yes	No	Yes	No	Yes	No
9	Federal Subscriber Line Charges	Yes	No	Yes	No	Yes	No	Yes	No	Yes	No	Yes	No	Yes	No	Yes	No	Yes	No
10	Nonrecuring Charges	Yes	Yes	Yes	Yes	Yes	Yes	Yes	Yes	Yes	Yes	Yes	Yes	Yes	Yes	Yes	Yes	Yes	No
11	End User Line Chg-Number Portability	Yes	No	Yes	No	Yes	No	Yes	No	Yes	No	Yes	No	Yes	No	Yes	No	Yes	No
12	Public Telephone Access Svc(PTAS)	Yes	Yes	Yes	Yes	Yes	Yes	Yes	Yes	Yes	Yes	Yes	Yes	Yes	Yes	Yes	No	Yes	Yes
13	Inside Wire Maint Service Plan	Yes	No	Yes	No	Yes	No	Yes	No	Yes	No	Yes	No	Yes	No	Yes	No	Yes	No

	Applicable Notes:
1.	**Grandfathered services** can be resold only to existing subscribers of the grandfathered service.
2.	Where available for resale, **promotions** will be made available only to End Users who would have qualified for the promotion had it been provided by BellSouth directly.
3.	Some of BellSouth's local exchange and toll telecommunications services are not available in certain central offices and areas.

LINE INFORMATION DATA BASE (LIDB)

RESALE STORAGE AGREEMENT

I. Definitions (from Addendum)

A. Billing number - a number used by BellSouth for the purpose of identifying an account liable for charges. This number may be a line or a special billing number.

B. Line number - a ten-digit number assigned by BellSouth that identifies a telephone line associated with a resold local exchange service.

C. Special billing number - a ten-digit number that identifies a billing account established by BellSouth in connection with a resold local exchange service.

D. Calling Card number - a billing number plus PIN number assigned by BellSouth.

E. PIN number - a four-digit security code assigned by BellSouth that is added to a billing number to compose a fourteen-digit calling card number.

F. Toll billing exception indicator - associated with a billing number to indicate that it is considered invalid for billing of collect calls or third number calls or both, by BLC Management.

G. Billed Number Screening - refers to the query service used to determine whether a toll billing exception indicator is present for a particular billing number.

H. Calling Card Validation - refers to the query service used to determine whether a particular calling card number exists as stated or otherwise provided by a caller.

I. Billing number information - information about billing number or Calling Card number as assigned by BellSouth and toll billing exception indicator provided to BellSouth by BLC Management.

J. Get-Data - refers to the query service used to determine, at a minimum, the Account Owner and/or Regional Accounting Office for a line number. This query service may be modified to provide additional information in the future.

K. Originating Line Number Screening ("OLNS") - refers to the query service used to determine the billing, screening and call handling indicators, station type and Account Owner provided to BellSouth by BLC Management for originating line numbers.

L. Account Owner - name of the local exchange telecommunications company that is providing dialtone on a subscriber line.

II. General

A. This Agreement sets forth the terms and conditions pursuant to which BellSouth agrees to store in its LIDB certain information at the request of BLC Management and pursuant to which BellSouth, its LIDB customers and BLC Management shall have access to such information. In addition, this Agreement sets forth the terms and conditions for BLC Management's provision of billing number information to BellSouth for inclusion in BellSouth's LIDB. BLC Management understands that BellSouth provides access to information in its LIDB to various telecommunications service providers pursuant to applicable tariffs and agrees that information stored at the request of BLC Management, pursuant to this Agreement, shall be available to those telecommunications service providers. The terms and conditions contained herein shall hereby be made a part of this Resale Agreement upon notice to BLC Management's account team and/or Local Contract Manager activate this LIDB Storage Agreement. The General Terms and Conditions of the Resale Agreement shall govern this LIDB Storage Agreement. The terms and conditions contained in the attached Addendum are hereby made a part of this LIDB Storage Agreement as if fully incorporated herein.

B. BellSouth will provide responses to on-line, call-by-call queries to billing number information for the following purposes:

1. Billed Number Screening

   BellSouth is authorized to use the billing number information to determine whether BLC Management has identified the billing number as one that should not be billed for collect or third number calls.

2. Calling Card Validation

   BellSouth is authorized to validate a 14-digit Calling Card number where the first 10 digits are a line number or special billing number assigned by BellSouth, and where the last four digits (PIN) are a security code assigned by BellSouth.

3. OLNS

   BellSouth is authorized to provide originating line screening information for billing services restrictions, station type, call handling indicators, presubscribed interLATA and local carrier and account owner on the lines of BLC Management from which a call originates.

4. GetData

BellSouth is authorized to provide, at a minimum, the account owner and/or Regional Accounting Office information on the lines of BLC Management indicating the local service provider and where billing records are to be sent for settlement purposes. This query service may be modified to provide additional information in the future.

5. Fraud Control

BellSouth will provide seven days per week, 24-hours per day, fraud monitoring on Calling Cards, bill-to-third and collect calls made to numbers in BellSouth's LIDB, provided that such information is included in the LIDB query. BellSouth will establish fraud alert thresholds and will notify BLC Management of fraud alerts so that BLC Management may take action it deems appropriate.

III. Responsibilities of the Parties

A. BellSouth will administer all data stored in the LIDB, including the data provided by BLC Management pursuant to this Agreement, in the same manner as BellSouth's data for BellSouth's End User customers. BellSouth shall not be responsible to BLC Management for any lost revenue which may result from BellSouth's administration of the LIDB pursuant to its established practices and procedures as they exist and as they may be changed by BellSouth in its sole discretion from time to time.

B. Billing and Collection Customers

BellSouth currently has in effect numerous billing and collection agreements with various interexchange carriers and billing clearing houses and as such these billing and collection customers ("B&C Customers") query BellSouth's LIDB to determine whether to accept various billing options from End Users. Until such time as BellSouth implements in its LIDB and its supporting systems the means to differentiate BLC Management's data from BellSouth's data, the following shall apply:

(1) BellSouth will identify BLC Management end user originated long distance charges and will return those charges to the interexchange carrer as not covered by the existing B&C agreement. BLC Management is responsible for entering into the appropriate agreement with interexchange carriers for handling of long distance charges by their end users.

(2) BellSouth shall have no obligation to become involved in any disputes between BLC Management and B&C Customers. BellSouth will not issue adjustments for charges billed on behalf of any B&C Customer to BLC Management. It shall be the responsibility of BLC Management and the B&C Customers to negotiate and arrange for any appropriate adjustments.

IV. Fees for Service and Taxes

A. BLC Management will not be charged a fee for storage services provided by BellSouth to BLC Management, as described in this LIDB Resale Storage Agreement.

B. Sales, use and all other taxes (excluding taxes on BellSouth's income) determined by BellSouth or any taxing authority to be due to any federal, state or local taxing jurisdiction with respect to the provision of the service set forth herein will be paid by BLC Management in accordance with the tax provisions set forth in the General Terms and Conditions of this Agreement.

Optional Daily Usage File

1. Upon written request from BLC Management, BellSouth will provide the Optional Daily Usage File (ODUF) service to BLC Management pursuant to the terms and conditions set forth in this section.

2. BLC Management shall furnish all relevant information required by BellSouth for the provision of the ODUF.

3. The ODUF feed will contain billable messages that were carried over the BellSouth Network and processed in the BellSouth Billing System, but billed to a BLC Management customer.

4. Charges for ODUF will appear on BLC Management's monthly bills. The charges are as set forth in Exhibit E to this Attachment. ODUF charges are billed once a month for the previous month's usage. BLC Management will be billed at the ODUF rates that are in effect at the end of the previous month.

5. The ODUF feed will contain both rated and unrated messages. All messages will be in the standard Alliance for Telecommunications Industry Solutions (ATIS) EMI record format.

5.1 Messages that error in BLC Management's billing system will be the responsibility of BLC Management. If, however, BLC Management should encounter significant volumes of errored messages that prevent processing by BLC Management within its systems, BellSouth will work with BLC Management to determine the source of the errors and the appropriate resolution.

6. The following specifications shall apply to the ODUF feed.

6.1 ODUF Message to be Transmitted

6.1.1 The following messages recorded by BellSouth will be transmitted to BLC Management:

- Message recording for per use/per activation type services (examples: Three Way Calling, Verify, Interrupt, Call Return, etc.)
- Measured billable Local
- Directory Assistance messages
- IntraLATA Toll

- WATS and 800 Service
- N11
- Information Service Provider Messages
- Operator Services Messages
- Credit/Cancel Records
- Usage for Voice Mail Message Service

6.1.2 Rated Incollects (originated in BellSouth and from other companies) can also be on ODUF. Rated Incollects will be intermingled with BellSouth recorded rated and unrated usage. Rated Incollects will not be packed separately.

6.1.3 BellSouth will perform duplicate record checks on records processed to ODUF. Any duplicate messages detected will be deleted and not sent to BLC Management.

6.1.4 In the event that BLC Management detects a duplicate on ODUF they receive from BellSouth, BLC Management will drop the duplicate message and will not return the duplicate to BellSouth).

6.2 ODUF Physical File Characteristics

6.2.1 The ODUF will be distributed to BLC Management via CONNECT:Direct or Secure File Transfer Protocol (FTP) or another mutually agreed medium. The ODUF feed will be a variable block format. The data on the ODUF feed will be in a non-compacted EMI format (175 byte format plus modules). It will be created on a daily basis Monday through Friday except holidays. Details such as dataset name and delivery schedule will be addressed during negotiations of the distribution medium. There will be a maximum of one dataset per workday per OCN.

6.2.2 Data circuits (private line or dial-up) will be required between BellSouth and BLC Management for the purpose of data transmission when utilizing CONNECT:Direct. Where a dedicated line is required, BLC Management will be responsible for ordering the circuit, overseeing its installation and coordinating the installation with BellSouth. BLC Management will also be responsible for any charges associated with this line. Equipment required on the BellSouth end to attach the line to the mainframe computer and to transmit data will be negotiated on an individual case basis. Where a dial-up facility is required, dial circuits will be installed in the BellSouth data center by BellSouth and the associated charges assessed to BLC Management. Additionally, all message toll charges associated with the use of the dial circuit by BLC Management will be the responsibility of BLC Management. Associated equipment on the

BellSouth end, including a modem, will be negotiated on an individual case basis between the Parties. All equipment, including modems and software, that is required on BLC Management end for the purpose of data transmission will be the responsibility of BLC Management.

6.2.3 If BLC Management utilizes Secure File Transfer Protocol (FTP) for data file transmission, purchase of the Secure File Transfer Protocol (FTP) software will be the responsibility of BLC Management.

6.3 ODUF Packing Specifications

6.3.1 A pack will contain a minimum of one message record or a maximum of 99,999 message records plus a pack header record and a pack trailer record. One transmission can contain a maximum of 99 packs and a minimum of one pack.

6.3.2 The OCN, From RAO, and Invoice Number will control the invoice sequencing. The From RAO will be used to identify to BLC Management which BellSouth RAO is sending the message. BellSouth and BLC Management will use the invoice sequencing to control data exchange. BellSouth will be notified of sequence failures identified by BLC Management and resend the data as appropriate.

The data will be packed using ATIS EMI records.

6.4 ODUF Pack Rejection

6.4.1 BLC Management will notify BellSouth within one business day of rejected packs (via the mutually agreed medium). Packs could be rejected because of pack sequencing discrepancies or a critical edit failure on the Pack Header or Pack Trailer records (i.e. out-of-balance condition on grand totals, invalid data populated). Standard ATIS EMI Error Codes will be used. BLC Management will not be required to return the actual rejected data to BellSouth. Rejected packs will be corrected and retransmitted to BLC Management by BellSouth.

6.5 ODUF Control Data

BLC Management will send one confirmation record per pack that is received from BellSouth. This confirmation record will indicate BLC Management received the pack and the acceptance or rejection of the pack. Pack Status Code(s) will be populated using standard ATIS EMI error codes for packs that were rejected by BLC Management for reasons stated in the above section.

6.6 ODUF Testing

6.6.1 Upon request from BLC Management, BellSouth shall send test files to BLC Management for the ODUF. The Parties agree to review and discuss the file's content and/or format. For testing of usage results, BellSouth shall request that BLC

Management set up a production (live) file. The live test may consist of BLC Management's employees making test calls for the types of services BLC Management requests on the ODUF. These test calls are logged by BLC Management, and the logs are provided to BellSouth. These logs will be used to verify the files. Testing will be completed within 30 calendar days from the date on which the initial test file was sent.

Enhanced Optional Daily Usage File

1. Upon written request from BLC Management, BellSouth will provide the Enhanced Optional Daily Usage File (EODUF) service to BLC Management pursuant to the terms and conditions set forth in this section. EODUF will only be sent to existing ODUF subscribers who request the EODUF option.

2. BLC Management shall furnish all relevant information required by BellSouth for the provision of the EODUF.

3. The EODUF will provide usage data for local calls originating from resold Flat Rate Business and Residential Lines.

4. Charges for delivery of the EODUF will appear on BLC Management's monthly bills. EODUF charges are billed at the EODUF rates that are in effect at the end of the previous month. The charges are as set forth in Exhibit E to this Attachment.

5. All messages will be in the standard Alliance for Telecommunications Industry Solutions (ATIS) EMI record format.

6. Messages that error in the billing system of BLC Management will be the responsibility of BLC Management. If, however, BLC Management should encounter significant volumes of errored messages that prevent processing by BLC Management within its systems, BellSouth will work with BLC Management to determine the source of the errors and the appropriate resolution.

7. The following specifications shall apply to the EODUF feed.

7.1 Usage To Be Transmitted

7.1.1 The following messages recorded by BellSouth will be transmitted to BLC Management:

Customer usage data for flat rated local call originating from BLC Management's End User lines (1FB or 1FR). The EODUF record for flat rate messages will include:

Date of Call

From Number

To Number

Connect Time

Conversation Time

Method of Recording

From RAO

Rate Class

Message Type

Billing Indicators

Bill to Number

7.1.2 BellSouth will perform duplicate record checks on EODUF records processed to O DUF. Any duplicate messages detected will be deleted and not sent to BLC Management.

7.1.3 In the event that BLC Management detects a duplicate on EODUF they receive from BellSouth, BLC Management will drop the duplicate message (BLC Management will not return the duplicate to BellSouth).

7.2 Physical File Characteristics

7.2.1 The EODUF feed will be distributed to BLC Management via Connect: Direct, Secure File Transfer Protocol (FTP)or another mutually agreed medium. The EODUF messages will be intermingled among BLC Management's Optional Daily Usage File (ODUF) messages. The EODUF will be a variable block format. The data on the EODUF will be in a non-compacted EMI format (175 byte format plus modules). It will be created on a daily basis Monday through Friday except holiday.

7.2.2 Data circuits (private line or dial-up) may be required between BellSouth and BLC Management for the purpose of data transmission as set forth in Section 6.2.2 above.

7.2.3 If BLC Management utilizes Secure File Transfer Protocol (FTP)for data file transmission, purchase of the Secure File Transfer Protocol (FTP)software will be the responsibility of BLC Management.

7.3 Packing Specifications

7.3.1 A pack will contain a minimum of one message record or a maximum of 99,999 message records plus a pack header record and a pack trailer record. One transmission can contain a maximum of 99 packs and a minimum of one pack.

7.3.2 The OCN, From (RAO), and Invoice Number will control the invoice sequencing. The From RAO will be used to identify to BLC Management which BellSouth RAO is sending the message. BellSouth and BLC Management will use the invoice sequencing to control data exchange. BellSouth will be notified of sequence failures identified by BLC Management and resend the data as appropriate.

The data will be packed using ATIS EMI Records.

RESALE DISCOUNTS AND RATES - Alabama														Attachment: 1		Exhibit: E	
CATEGORY		RATE ELEMENTS	Interim	Zone	BCS	USOC	RATES ($)					Svc Order Submitted Elec per LSR	Svc Order Submitted Manually per LSR	Incremental Charge - Manual Svc Order vs. Electronic-1st	Incremental Charge - Manual Svc Order vs. Electronic-Add'l	Incremental Charge - Manual Svc Order vs. Electronic-Disc 1st	Incremental Charge - Manual Svc Order vs. Electronic-Disc Add'l
							Rec	Nonrecurring		Nonrecurring Disconnect		OSS Rates ($)					
								First	Add'l	First	Add'l	SOMEC	SOMAN	SOMAN	SOMAN	SOMAN	SOMAN
APPLICABLE DISCOUNTS																	
		Residence %					16.30										
		Business %					16.30										
		CSAs %					16.30										
OPERATIONAL SUPPORT SYSTEMS (OSS) - "REGIONAL RATES"																	
	NOTE: (1) CLEC should contact its contract negotiator if it prefers the "state specific" OSS charges as ordered by the State Commissions. The OSS charges currently contained in this rate exhibit are the BellSouth "regional" service ordering charges. CLEC may elect either the state specific Commission ordered rates for the service ordering charges, or CLEC may elect the regional service ordering charge, however, CLEC can not obtain a mixture of the two regardless if CLEC has a interconnection contract established in															
		OSS - Electronic Service Order Charge, Per Local Service Request (LSR) - Resale Only				SOMEC		3.50	0.00	3.50	0.00						
		OSS - Manual Service Order Charge, Per Local Service Request (LSR) - Resale Only				SOMAN		19.99	0.00	19.99	0.00						
SELECTIVE CALL ROUTING USING LINE CLASS CODES (SCR-LCC)																	
		Selective Routing Per Unique Line Class Code Per Request Per Switch						84.70	84.70	14.11	14.11						
ODUF/EODUF SERVICES																	
	OPTIONAL DAILY USAGE FILE (ODUF)																
		ODUF: Recording, per message					0.000011										
		ODUF: Message Processing, per message					0.004101										
		ODUF: Message Processing, per Magnetic Tape provisioned					42.67										
		ODUF: Data Transmission (CONNECT:DIRECT), per message					0.000094										
	ENHANCED OPTIONAL DAILY USAGE FILE (EODUF)																
		EODUF: Message Processing, per message					0.22										

RESALE DISCOUNTS AND RATES - Florida														Attachment: 1		Exhibit: E	
CATEGORY		RATE ELEMENTS	Interim	Zone	BCS	USOC	RATES ($)					Svc Order Submitted Elec per LSR	Svc Order Submitted Manually per LSR	Incremental Charge - Manual Svc Order vs. Electronic-1st	Incremental Charge - Manual Svc Order vs. Electronic-Add'l	Incremental Charge - Manual Svc Order vs. Electronic-Disc 1st	Incremental Charge - Manual Svc Order vs. Electronic-Disc Add'l
							Rec	Nonrecurring		Nonrecurring Disconnect		OSS Rates ($)					
								First	Add'l	First	Add'l	SOMEC	SOMAN	SOMAN	SOMAN	SOMAN	SOMAN
APPLICABLE DISCOUNTS																	
		Residence %					21.83										
		Business %					16.81										
		CSAs %					16.81										
OPERATIONAL SUPPORT SYSTEMS (OSS) - "REGIONAL RATES"																	
	NOTE: (1) CLEC should contact its contract negotiator if it prefers the "state specific" OSS charges as ordered by the State Commissions. The OSS charges currently contained in this rate exhibit are the BellSouth "regional" service ordering charges. CLEC may elect either the state specific Commission ordered rates for the service ordering charges, or CLEC may elect the regional service ordering charge, however, CLEC can not obtain a mixture of the two regardless if CLEC has a interconnection contract established in															
		OSS - Electronic Service Order Charge, Per Local Service Request (LSR) - Resale Only				SOMEC		3.50	0.00	3.50	0.00						
		OSS - Manual Service Order Charge, Per Local Service Request (LSR) - Resale Only				SOMAN		19.99	0.00	19.99	0.00						
SELECTIVE CALL ROUTING USING LINE CLASS CODES (SCR-LCC)																	
		Selective Routing Per Unique Line Class Code Per Request Per Switch						93.55	93.55	12.71	12.71						
ODUF/EODUF SERVICES																	
	OPTIONAL DAILY USAGE FILE (ODUF)																
		ODUF: Recording, per message					0.0000071										
		ODUF: Message Processing, per message					0.002146										
		ODUF: Message Processing, per Magnetic Tape provisioned					35.91										
		ODUF: Data Transmission (CONNECT:DIRECT), per message					0.00010375										
	ENHANCED OPTIONAL DAILY USAGE FILE (EODUF)																
		EODUF: Message Processing, per message					0.080698										

RESALE DISCOUNTS AND RATES - Georgia														Attachment: 1		Exhibit: E	
CATEGORY		RATE ELEMENTS	Interim	Zone	BCS	USOC	RATES ($)					Svc Order Submitted Elec per LSR	Svc Order Submitted Manually per LSR	Incremental Charge - Manual Svc Order vs. Electronic-1st	Incremental Charge - Manual Svc Order vs. Electronic-Add'l	Incremental Charge - Manual Svc Order vs. Electronic-Disc 1st	Incremental Charge - Manual Svc Order vs. Electronic-Disc Add'l
							Rec	Nonrecurring		Nonrecurring Disconnect		OSS Rates ($)					
								First	Add'l	First	Add'l	SOMEC	SOMAN	SOMAN	SOMAN	SOMAN	SOMAN
APPLICABLE DISCOUNTS																	
		Residence %					20.30										
		Business %					17.30										
		CSAs %					17.30										
OPERATIONAL SUPPORT SYSTEMS (OSS) - "REGIONAL RATES"																	
	NOTE: (1) CLEC should contact its contract negotiator if it prefers the "state specific" OSS charges as ordered by the State Commissions. The OSS charges currently contained in this rate exhibit are the BellSouth "regional" service ordering charges. CLEC may elect either the state specific Commission ordered rates for the service ordering charges, or CLEC may elect the regional service ordering charge, however, CLEC can not obtain a mixture of the two regardless if CLEC has a interconnection contract established in															
		OSS - Electronic Service Order Charge, Per Local Service Request (LSR) - Resale Only				SOMEC		3.50	0.00	3.50	0.00						
		OSS - Manual Service Order Charge, Per Local Service Request (LSR) - Resale Only				SOMAN		19.99	0.00	19.99	0.00						
SELECTIVE CALL ROUTING USING LINE CLASS CODES (SCR-LCC)																	
		Selective Routing Per Unique Line Class Code Per Request Per Switch						102.19	61.15	12.68	6.34						
ODUF/EODUF SERVICES																	
	OPTIONAL DAILY USAGE FILE (ODUF)																
		ODUF: Recording, per message					0.0000068										
		ODUF: Message Processing, per message					0.002167										
		ODUF: Message Processing, per Magnetic Tape provisioned					36.06										
		ODUF: Data Transmission (CONNECT:DIRECT), per message					0.00010856										
	ENHANCED OPTIONAL DAILY USAGE FILE (EODUF)																
		EODUF: Message Processing, per message					0.227409										

RESALE DISCOUNTS AND RATES - Kentucky														Attachment: 1		Exhibit: E	
CATEGORY		RATE ELEMENTS	Interim	Zone	BCS	USOC	RATES ($)					Svc Order Submitted Elec per LSR	Svc Order Submitted Manually per LSR	Incremental Charge - Manual Svc Order vs. Electronic-1st	Incremental Charge - Manual Svc Order vs. Electronic-Add'l	Incremental Charge - Manual Svc Order vs. Electronic-Disc 1st	Incremental Charge - Manual Svc Order vs. Electronic-Disc Add'l
							Rec	Nonrecurring		Nonrecurring Disconnect		OSS Rates ($)					
								First	Add'l	First	Add'l	SOMEC	SOMAN	SOMAN	SOMAN	SOMAN	SOMAN
APPLICABLE DISCOUNTS																	
		Residence %					16.79										
		Business %					15.54										
		CSAs %					15.54										
OPERATIONAL SUPPORT SYSTEMS (OSS) - "REGIONAL RATES"																	
	NOTE: (1) CLEC should contact its contract negotiator if it prefers the "state specific" OSS charges as ordered by the State Commissions. The OSS charges currently contained in this rate exhibit are the BellSouth "regional" service ordering charges. CLEC may elect either the state specific Commission ordered rates for the service ordering charges, or CLEC may elect the regional service ordering charge, however, CLEC can not obtain a mixture of the two regardless if CLEC has a interconnection contract established in															
		OSS - Electronic Service Order Charge, Per Local Service Request (LSR) - Resale Only				SOMEC		3.50	0.00	3.50	0.00						
		OSS - Manual Service Order Charge, Per Local Service Request (LSR) - Resale Only				SOMAN		19.99	0.00	19.99	0.00						
SELECTIVE CALL ROUTING USING LINE CLASS CODES (SCR-LCC)																	
		Selective Routing Per Unique Line Class Code Per Request Per Switch						93.53	93.53	15.58	15.58						
ODUF/EODUF SERVICES																	
	OPTIONAL DAILY USAGE FILE (ODUF)																
		ODUF: Recording, per message					0.0000136										
		ODUF: Message Processing, per message					0.002506										
		ODUF: Message Processing, per Magnetic Tape provisioned					35.90										
		ODUF: Data Transmission (CONNECT:DIRECT), per message					0.00010372										
	ENHANCED OPTIONAL DAILY USAGE FILE (EODUF)																
		EODUF: Message Processing, per message					0.235889										

RESALE DISCOUNTS AND RATES - Louisiana														Attachment: 1		Exhibit: E	
CATEGORY		RATE ELEMENTS	Interim	Zone	BCS	USOC	RATES ($)					Svc Order Submitted Elec per LSR	Svc Order Submitted Manually per LSR	Incremental Charge - Manual Svc Order vs. Electronic-1st	Incremental Charge - Manual Svc Order vs. Electronic-Add'l	Incremental Charge - Manual Svc Order vs. Electronic-Disc 1st	Incremental Charge - Manual Svc Order vs. Electronic-Disc Add'l
							Rec	Nonrecurring		Nonrecurring Disconnect		OSS Rates ($)					
								First	Add'l	First	Add'l	SOMEC	SOMAN	SOMAN	SOMAN	SOMAN	SOMAN
APPLICABLE DISCOUNTS																	
		Residence %					20.72										
		Business %					20.72										
		CSAs %					9.05										
OPERATIONAL SUPPORT SYSTEMS (OSS) - "REGIONAL RATES"																	
	NOTE: (1) CLEC should contact its contract negotiator if it prefers the "state specific" OSS charges as ordered by the State Commissions. The OSS charges currently contained in this rate exhibit are the BellSouth "regional" service ordering charges. CLEC may elect either the state specific Commission ordered rates for the service ordering charges, or CLEC may elect the regional service ordering charge, however, CLEC can not obtain a mixture of the two regardless if CLEC has a interconnection contract established in															
		OSS - Electronic Service Order Charge, Per Local Service Request (LSR) - Resale Only				SOMEC		3.50	0.00	3.50	0.00						
		OSS - Manual Service Order Charge, Per Local Service Request (LSR) - Resale Only				SOMAN		19.99	0.00	19.99	0.00						
SELECTIVE CALL ROUTING USING LINE CLASS CODES (SCR-LCC)																	
		Selective Routing Per Unique Line Class Code Per Request Per Switch						82.25	82.25								
ODUF/EODUF SERVICES																	
	OPTIONAL DAILY USAGE FILE (ODUF)																
		ODUF: Recording, per message					0.0000117										
		ODUF: Message Processing, per message					0.004641										
		ODUF: Message Processing, per Magnetic Tape provisioned					48.45										
		ODUF: Data Transmission (CONNECT:DIRECT), per message					0.00010568										
	ENHANCED OPTIONAL DAILY USAGE FILE (EODUF)																
		EODUF: Message Processing, per message					0.250015										

RESALE DISCOUNTS AND RATES - Mississippi														Attachment: 1		Exhibit: E	
CATEGORY		RATE ELEMENTS	Interim	Zone	BCS	USOC	RATES ($)					Svc Order Submitted Elec per LSR	Svc Order Submitted Manually per LSR	Incremental Charge - Manual Svc Order vs. Electronic-1st	Incremental Charge - Manual Svc Order vs. Electronic-Add'l	Incremental Charge - Manual Svc Order vs. Electronic-Disc 1st	Incremental Charge - Manual Svc Order vs. Electronic-Disc Add'l
							Rec	Nonrecurring		Nonrecurring Disconnect		OSS Rates ($)					
								First	Add'l	First	Add'l	SOMEC	SOMAN	SOMAN	SOMAN	SOMAN	SOMAN
APPLICABLE DISCOUNTS																	
		Residence %					15.75										
		Business %					15.75										
		CSAs %					15.75										
OPERATIONAL SUPPORT SYSTEMS (OSS) - "REGIONAL RATES"																	
	NOTE: (1) CLEC should contact its contract negotiator if it prefers the "state specific" OSS charges as ordered by the State Commissions. The OSS charges currently contained in this rate exhibit are the BellSouth "regional" service ordering charges. CLEC may elect either the state specific Commission ordered rates for the service ordering charges, or CLEC may elect the regional service ordering charge, however, CLEC can not obtain a mixture of the two regardless if CLEC has a interconnection contract established in															
		OSS - Electronic Service Order Charge, Per Local Service Request (LSR) - Resale Only				SOMEC		3.50	0.00	3.50	0.00						
		OSS - Manual Service Order Charge, Per Local Service Request (LSR) - Resale Only				SOMAN		19.99	0.00	19.99	0.00						
SELECTIVE CALL ROUTING USING LINE CLASS CODES (SCR-LCC)																	
		Selective Routing Per Unique Line Class Code Per Request Per Switch						85.19	85.19	14.19	14.19						
ODUF/EODUF SERVICES																	
	OPTIONAL DAILY USAGE FILE (ODUF)																
		ODUF: Recording, per message					0.0000063										
		ODUF: Message Processing, per message					0.004707										
		ODUF: Message Processing, per Magnetic Tape provisioned					49.04										
		ODUF: Data Transmission (CONNECT:DIRECT), per message					0.00010669										
	ENHANCED OPTIONAL DAILY USAGE FILE (EODUF)																
		EODUF: Message Processing, per message					0.250424										

RESALE DISCOUNTS AND RATES - North Carolina														Attachment: 1		Exhibit: E	
CATEGORY		RATE ELEMENTS	Interim	Zone	BCS	USOC	RATES ($)					Svc Order Submitted Elec per LSR	Svc Order Submitted Manually per LSR	Incremental Charge - Manual Svc Order vs. Electronic-1st	Incremental Charge - Manual Svc Order vs. Electronic-Add'l	Incremental Charge - Manual Svc Order vs. Electronic-Disc 1st	Incremental Charge - Manual Svc Order vs. Electronic-Disc Add'l
							Rec	Nonrecurring		Nonrecurring Disconnect		OSS Rates ($)					
								First	Add'l	First	Add'l	SOMEC	SOMAN	SOMAN	SOMAN	SOMAN	SOMAN
APPLICABLE DISCOUNTS																	
		Residence %					21.50										
		Business %					17.60										
		CSAs %					17.60										
OPERATIONAL SUPPORT SYSTEMS (OSS) - "REGIONAL RATES"																	
	NOTE: (1) CLEC should contact its contract negotiator if it prefers the "state specific" OSS charges as ordered by the State Commissions. The OSS charges currently contained in this rate exhibit are the BellSouth "regional" service ordering charges. CLEC may elect either the state specific Commission ordered rates for the service ordering charges, or CLEC may elect the regional service ordering charge, however, CLEC can not obtain a mixture of the two regardless if CLEC has a interconnection contract established in															
		OSS - Electronic Service Order Charge, Per Local Service Request (LSR) - Resale Only				SOMEC		3.50	0.00	3.50	0.00						
		OSS - Manual Service Order Charge, Per Local Service Request (LSR) - Resale Only				SOMAN		19.99	0.00	19.99	0.00						
SELECTIVE CALL ROUTING USING LINE CLASS CODES (SCR-LCC)																	
		Selective Routing Per Unique Line Class Code Per Request Per Switch						188.59									
ODUF/EODUF SERVICES																	
	OPTIONAL DAILY USAGE FILE (ODUF)																
		ODUF: Recording, per message					0.0003										
		ODUF: Message Processing, per message					0.0032										
		ODUF: Message Processing, per Magnetic Tape provisioned					54.61										
		ODUF: Data Transmission (CONNECT:DIRECT), per message					0.00004										
	ENHANCED OPTIONAL DAILY USAGE FILE (EODUF)																
		EODUF: Message Processing, per message					0.2285406										

RESALE DISCOUNTS AND RATES - South Carolina														Attachment: 1		Exhibit: E	
CATEGORY		RATE ELEMENTS	Interim	Zone	BCS	USOC	RATES ($)					Svc Order Submitted Elec per LSR	Svc Order Submitted Manually per LSR	Incremental Charge - Manual Svc Order vs. Electronic-1st	Incremental Charge - Manual Svc Order vs. Electronic-Add'l	Incremental Charge - Manual Svc Order vs. Electronic-Disc 1st	Incremental Charge - Manual Svc Order vs. Electronic-Disc Add'l
							Rec	Nonrecurring		Nonrecurring Disconnect		OSS Rates ($)					
								First	Add'l	First	Add'l	SOMEC	SOMAN	SOMAN	SOMAN	SOMAN	SOMAN
APPLICABLE DISCOUNTS																	
		Residence %					14.80										
		Business %					14.80										
		CSAs %					8.98										
OPERATIONAL SUPPORT SYSTEMS (OSS) - "REGIONAL RATES"																	
	NOTE: (1) CLEC should contact its contract negotiator if it prefers the "state specific" OSS charges as ordered by the State Commissions. The OSS charges currently contained in this rate exhibit are the BellSouth "regional" service ordering charges. CLEC may elect either the state specific Commission ordered rates for the service ordering charges, or CLEC may elect the regional service ordering charge, however, CLEC can not obtain a mixture of the two regardless if CLEC has a interconnection contract established in															
		OSS - Electronic Service Order Charge, Per Local Service Request (LSR) - Resale Only				SOMEC		3.50	0.00	3.50	0.00						
		OSS - Manual Service Order Charge, Per Local Service Request (LSR) - Resale Only				SOMAN		19.99	0.00	19.99	0.00						
SELECTIVE CALL ROUTING USING LINE CLASS CODES (SCR-LCC)																	
		Selective Routing Per Unique Line Class Code Per Request Per Switch						84.89	84.89	14.14	14.14						
ODUF/EODUF SERVICES																	
	OPTIONAL DAILY USAGE FILE (ODUF)																
		ODUF: Recording, per message					0.0000216										
		ODUF: Message Processing, per message					0.004704										
		ODUF: Message Processing, per Magnetic Tape provisioned					48.87										
		ODUF: Data Transmission (CONNECT:DIRECT), per message					0.00010863										
	ENHANCED OPTIONAL DAILY USAGE FILE (EODUF)																
		EODUF: Message Processing, per message					0.258301										

RESALE DISCOUNTS AND RATES - Tennessee														Attachment: 1		Exhibit: E	
CATEGORY		RATE ELEMENTS	Interim	Zone	BCS	USOC	RATES ($)					Svc Order Submitted Elec per LSR	Svc Order Submitted Manually per LSR	Incremental Charge - Manual Svc Order vs. Electronic-1st	Incremental Charge - Manual Svc Order vs. Electronic-Add'l	Incremental Charge - Manual Svc Order vs. Electronic-Disc 1st	Incremental Charge - Manual Svc Order vs. Electronic-Disc Add'l
							Rec	Nonrecurring		Nonrecurring Disconnect		OSS Rates ($)					
								First	Add'l	First	Add'l	SOMEC	SOMAN	SOMAN	SOMAN	SOMAN	SOMAN
APPLICABLE DISCOUNTS																	
		Residence %					16.00										
		Business %					16.00										
		CSAs %					16.00										
OPERATIONAL SUPPORT SYSTEMS (OSS) - "REGIONAL RATES"																	
	NOTE: (1) CLEC should contact its contract negotiator if it prefers the "state specific" OSS charges as ordered by the State Commissions. The OSS charges currently contained in this rate exhibit are the BellSouth "regional" service ordering charges. CLEC may elect either the state specific Commission ordered rates for the service ordering charges, or CLEC may elect the regional service ordering charge, however, CLEC can not obtain a mixture of the two regardless if CLEC has a interconnection contract established in															
		OSS - Electronic Service Order Charge, Per Local Service Request (LSR) - Resale Only				SOMEC		3.50	0.00	3.50	0.00						
		OSS - Manual Service Order Charge, Per Local Service Request (LSR) - Resale Only				SOMAN		19.99	0.00	19.99	0.00						
SELECTIVE CALL ROUTING USING LINE CLASS CODES (SCR-LCC)																	
		Selective Routing Per Unique Line Class Code Per Request Per Switch						179.60	179.60								
ODUF/EODUF SERVICES																	
	OPTIONAL DAILY USAGE FILE (ODUF)																
		ODUF: Recording, per message					0.0000044										
		ODUF: Message Processing, per message					0.0027366										
		ODUF: Message Processing, per Magnetic Tape provisioned					52.75										
		ODUF: Data Transmission (CONNECT:DIRECT), per message					0.0000339										
	ENHANCED OPTIONAL DAILY USAGE FILE (EODUF)																
		EODUF: Message Processing, per message					0.004										

Attachment 2

Network Elements and Other Services

TABLE OF CONTENTS

1 INTRODUCTION 3

2 UNBUNDLED LOOPS 5

3 LINE SHARING 27

4 LOCAL SWITCHING 34

5 UNBUNDLED NETWORK ELEMENT COMBINATIONS 42

6 TRANSPORT, CHANNELIZATION AND DARK FIBER 46

7 DATABASES 50

8 BELLSOUTH SWITCHED ACCESS (SWA) 8XX TOLL FREE DIALING TEN DIGIT SCREENING SERVICE 51

9 LINE INFORMATION DATABASE (LIDB) 51

10 SIGNALING 54

11 AUTOMATIC LOCATION IDENTIFICATION/DATA MANAGEMENT SYSTEM (ALI/DMS) 60

12 CALLING NAME (CNAM) DATABASE SERVICE 61

13 SERVICE CREATION ENVIRONMENT AND SERVICE MANAGEMENT SYSTEM (SCE/SMS) ADVANCED INTELLIGENT NETWORK (AIN) ACCESS 62

14 OPERATIONAL SUPPORT SYSTEMS (OSS) 63

Rates ..... Exhibit A

ACCESS TO NETWORK ELEMENTS AND OTHER SERVICES

1 Introduction

1.1 This Attachment sets forth rates, terms and conditions for Network Elements and combinations of Network Elements that BellSouth agrees to offer to BLC Management in accordance with its obligations under Section 251(c)(3) of the Act. Additionally, this Attachment sets forth the rates, terms and conditions for other facilities and services BellSouth makes available to BLC Management (Other Services). The rates for each Network Element and combination of Network Elements and Other Services are set forth in Exhibit A of this Attachment. Additionally, the provision of a particular Network Element or Other Service may require BLC Management to purchase other Network Elements or services. In the event of a conflict between this Attachment and any other section or provision of this Agreement, the provisions of this Attachment shall control.

1.2 For purposes of this Agreement**, "**Network Element**"** is defined to mean a facility or equipment BLC Management used in the provision of a qualifying service, as defined by the FCC. BLC Management may not access a Network Element for the sole purpose of providing non-qualifying services as defined by the FCC. For purposes of this Agreement, combinations of Network Elements shall be referred to as "Combinations."

1.3 BellSouth shall, upon request of BLC Management, and to the extent technically feasible, provide to BLC Management access to its Network Elements for the provision of BLC Management's qualifying services. If no rate is identified in this Agreement, the rate will be as set forth in the applicable BellSouth tariff or as negotiated by the Parties upon request by either Party.

1.4 BLC Management may purchase and use Network Elements and Other Services from BellSouth in accordance with 47 C.F.R 51.309.

1.5 BellSouth shall comply with the requirements as set forth in the technical references within this Attachment 2.

1.6 Except to the extent required by the Report and Order on Remand and Further Notice of Proposed Rulemaking (rel. Aug. 21, 2003) ("TRO"), any Network Elements that no longer require unbundling on a national level will no longer be available pursuant to this Agreement.

1.7 Upon request, BellSouth shall convert a wholesale service, or group of wholesale services, to the equivalent unbundled Network Element, or combination of elements that is available to BLC Management under Section 251(c)(3) of the Telecommunications Act of 1996. Nonrecurring switch-as-is rates for conversion of Network Elements are contained in Exhibit A of this Attachment. Conversion of a wholesale service or group of wholesale services shall be considered

termination for purposes of any volume and/or term commitments and/or grandfathered status between BLC Management and BellSouth. Any change from a wholesale service to a Network Element that requires a physical rearrangement of the Network Element will not be considered a conversion for purposes of this Agreement.

1.8 Except to the extent expressly provided otherwise in this Attachment, for elements or combinations of elements that are no longer offered pursuant to, or are not in compliance with, the terms set forth in this Agreement (for example, but not limited to, local channels or non-compliant EELs), BLC Management will submit orders to rearrange or disconnect those arrangements or services within thirty (30) calendar days of the Effective Date of this Agreement. If orders to rearrange or disconnect those arrangements or services are not received by the 31st day after the Effective Date of this Agreement, BellSouth may disconnect those arrangements or services without further notice. Where no re-termination or physical rearrangement of circuits or service is required, BLC Management will be charged a nonrecurring switch-as-is charge for the individual Network Element(s) as set forth in Exhibit A. For arrangements that require a re-termination or other physical rearrangement of circuits to comply with the terms of this Agreement, nonrecurring charges for the applicable Network Element from Exhibit A of this Attachment will apply. To the extent a Network Element requires re-termination or other physical rearrangement in order to comply with a tariff or separate agreement, the applicable rates, terms and conditions of such tariff or separate agreement shall apply.

1.8.1 BLC Management may utilize Network Elements and Other Services to provide services as long as such services are consistent with industry standards and applicable BellSouth Technical References.

1.8.2 Except to the extent expressly provided otherwise in this Attachment, if a Network Element is not readily available but can be made available through routine network modifications, as defined by the FCC, BLC Management may request BellSouth to perform such routine network modifications. Each request will be handled as a project on an individual case basis. BellSouth will provide a price quote for the request, and upon receipt of payment by BLC Management, BellSouth shall perform the routine network modifications.

1.8.3 Notwithstanding any other provision of this Agreement, BellSouth will not commingle or combine Network Elements or combinations of Network Elements with any service, network element or other offering that it is obligated to make available only pursuant to Section 271 of the Act.

1.9 <u>Commingling of Services</u>

1.9.1 Commingling means the connecting, attaching, or otherwise linking of a Network Element, or a Network Element combination, to one or more telecommunications

services or facilities that BLC Management has obtained at wholesale from BellSouth, or the combining of a Network Element or Network Element combination with one or more such wholesale telecommunications services or facilities.

1.9.2 Subject to the limitations set forth elsewhere in this Attachment, BellSouth shall not deny access to a Network Element or a combination of Network Elements on the grounds that one or more of the elements: 1) is connected to, attached to, linked to, or combined with such a facility or service obtained from BellSouth; or 2) shares part of BellSouth's network with access services or inputs for non-qualifying services.

1.9.3 BellSouth will not "ratchet" a commingled circuit. Unless otherwise agreed to by the Parties, the Network Element portion of such circuit will be billed at the rates set forth in this Agreement and the remainder of the circuit or service will be billed in accordance with BellSouth's tariffed rates.

1.9.4 When multiplexing equipment is attached to a commingled circuit, the multiplexing equipment and Central Office Channel Interfaces will be billed from the same jurisdictional authorization (agreement or tariff) as the higher grade of service.

1.10 If BLC Management reports a trouble on a Network Element or Other Service and no trouble actually exists on the BellSouth portion, BellSouth will charge BLC Management for any dispatching and testing (both inside and outside the Central Office (CO)) required by BellSouth in order to confirm the working status.

1.11 Rates

1.11.1 The prices that BLC Management shall pay to BellSouth for Network Elements and Other Services are set forth in Exhibit A to this Attachment. If BLC Management purchases a service(s) from a tariff, all terms and conditions and rates as set forth in such tariff shall apply.

1.11.2 Rates, terms and conditions for order cancellation charges and Service Date Advancement Charges will apply in accordance with Attachment 6 and are incorporated herein by this reference.

1.11.3 If BLC Management modifies an order (Order Modification Charge (OMC)) after being sent a Firm Order Confirmation (FOC) from BellSouth, any costs incurred by BellSouth to accommodate the modification will be paid by BLC Management in accordance with FCC No. 1 Tariff, Section 5.

1.11.4 A one-month minimum billing period shall apply to all Network Elements and Other Services.

2 Unbundled Loops

2.1 General

2.1.1 The local loop Network Element (Loop) is defined as a transmission facility between a distribution frame (or its equivalent) in BellSouth's central office and the Loop demarcation point at an End User's customer premises, including inside wire owned by BellSouth. Facilities that do not terminate at a demarcation point at an End User customer premises, including, by way of example, but not limited to, facilities that terminate to another carrier's switch or premises, a cell site, Mobile Switching Center or base station, do not constitute Loops. The Loop Network Element includes all features, functions, and capabilities of the transmission facilities, including the network interface device, and attached electronics (except those used for the provision of advanced services, such as Digital Subscriber Line Access Multiplexers), optronics and intermediate devices (including repeaters and load coils) used to establish the transmission path to the End User's customer premises. BLC Management shall purchase the entire bandwidth of the Loop and, except as required herein or as otherwise agreed to by the Parties, BellSouth shall not subdivide the frequency of the Loop.

2.1.1.1 The Loop does not include any packet switched features, functions or capabilities.

2.1.1.2 In new build (Greenfield) areas, where BellSouth has only deployed Fiber To The Home (FTTH) facilities, BellSouth is under no obligation to provide Loops.

2.1.1.3 In FTTH overbuild situations where BellSouth also has copper Loops, BellSouth will make those copper Loops available to BLC Management on an unbundled basis, until such time as BellSouth chooses to retire those copper Loops using the FCC's network disclosure requirements. In these cases, BellSouth will offer a 64kbps second voice grade channel over its FTTH facilities.

2.1.1.4 Furthermore, in FTTH overbuild areas, BellSouth is not obligated to ensure that copper Loops in that area are capable of transmitting signals prior to receiving a request for access to such Loops by BLC Management. If a request is received by BellSouth for a copper Loop, BellSouth will restore the copper Loop to serviceable condition if technically feasible. In these instances of Loop orders in an FTTH overbuild area, BellSouth's standard Loop provisioning interval will not apply, and the order will be handled on a project basis by which the Parties will negotiate the applicable provisioning interval.

2.1.1.5 For hybrid loops, where BLC Management seeks access to a hybrid loop for the provision of broadband services, BellSouth shall provide BLC Management with nondiscriminatory access to the time division multiplexing features, functions and capabilities of that hybrid loop, including DS1 or DS3, on an unbundled basis to establish a complete transmission path between BellSouth's central office and an End User's customer premises.

2.1.1.6 BLC Management may not purchase Loops or convert Special Access circuits to Loops if such Loops will be used to provide wireless telecommunications services.

2.1.2 The provisioning of a Loop to BLC Management's collocation space will require cross office cabling and cross connections within the central office to connect the Loop to a local switch or to other transmission equipment. These cross connects are separate components that are not considered a part of the Loop, and thus, have a separate charge.

2.1.3 Where facilities are available, BellSouth will install Loops in compliance with BellSouth's Products and Services Interval Guide available at the website at http://www.interconnection.bellsouth.com. For orders of fifteen (15) or more Loops, the installation and any applicable Order Coordination as described below will be handled on a project basis, and the intervals will be set by the BellSouth project manager for that order. When Loops require a Service Inquiry (SI) prior to issuing the order to determine if facilities are available, the interval for the SI process is separate from the installation interval.

2.1.4 The Loop shall be provided to BLC Management in accordance with BellSouth's TR73600 Unbundled Local Loop Technical Specification and applicable industry standard technical references.

2.1.5 BellSouth will only provision, maintain and repair the Loops to the standards that are consistent with the type of Loop ordered.

2.1.5.1 When a BellSouth technician is required to be dispatched to provision the Loop, BellSouth will tag the Loop with the Circuit ID number and the name of the ordering CLEC. When a dispatch is not required to provision the Loop, BellSouth will tag the Loop on the next required visit to the End User's location. If BLC Management wants to ensure the Loop is tagged during the provisioning process for Loops that may not require a dispatch (e.g. UVL-SL1, UVL-SL2, and UCL-ND), BLC Management may order Loop Tagging. Rates for Loop Tagging are as set forth in Exhibit A of this Attachment.

2.1.5.2 In the event BellSouth must dispatch to the end-user's location more than once due to incorrect or incomplete information provided by BLC Management (e.g., incomplete address, incorrect contact name/number, etc.), BellSouth will bill BLC Management for each additional dispatch required to provision the circuit due to the incorrect/incomplete information provided. BellSouth will assess the applicable Trouble Determination rates from BellSouth's FCC or state tariffs.

2.1.6 **Loop Testing/Trouble Reporting**

2.1.6.1 BLC Management will be responsible for testing and isolating troubles on the Loops. BLC Management must test and isolate trouble to the BellSouth portion of a designed/non-designed unbundled Loop (e.g., UVL-SL2, UCL-D, UVL-SL1,

UCL-ND, etc.) before reporting repair to the UNE Customer Wholesale Interconnection Network Services (CWINS) Center. Upon request from BellSouth at the time of the trouble report, BLC Management will be required to provide the results of the BLC Management test which indicate a problem on the BellSouth provided Loop.

2.1.6.2 Once BLC Management has isolated a trouble to the BellSouth provided Loop, and had issued a trouble report to BellSouth on the Loop, BellSouth will take the actions necessary to repair the Loop if a trouble actually exists. BellSouth will repair these Loops in the same time frames that BellSouth repairs similarly situated Loops to its End Users.

2.1.6.3 If BLC Management reports a trouble on a non-designed or designed Loop and no trouble actually exists, BellSouth will charge BLC Management for any dispatching and testing (both inside and outside the CO) required by BellSouth in order to confirm the Loop's working status.

2.1.6.4 In the event BellSouth must dispatch to the end-user's location more than once due to incorrect or incomplete information provided by BLC Management (e.g., incomplete address, incorrect contact name/number, etc.), BellSouth will bill BLC Management for each additional dispatch required to repair the circuit due to the incorrect/incomplete information provided. BellSouth will assess the applicable Trouble Determination rates from BellSouth's FCC or state tariffs.

2.1.7 **Order Coordination and Order Coordination-Time Specific**

2.1.7.1 "Order Coordination" (OC) allows BellSouth and BLC Management to coordinate the installation of the SL2 Loops, Unbundled Digital Loops (UDL) and other Loops where OC may be purchased as an option, to BLC Management's facilities to limit End User service outage. OC is available when the Loop is provisioned over an existing circuit that is currently providing service to the End User. OC for physical conversions will be scheduled at BellSouth's discretion during normal working hours on the committed due date. OC shall be provided in accordance with the chart set forth below.

2.1.7.2 "Order Coordination – Time Specific" (OC-TS) allows BLC Management to order a specific time for OC to take place. BellSouth will make every effort to accommodate BLC Management's specific conversion time request. However, BellSouth reserves the right to negotiate with BLC Management a conversion time based on load and appointment control when necessary. This OC-TS is a chargeable option for all Loops except Unbundled Copper Loops (UCL) and is billed in addition to the OC charge. BLC Management may specify a time between 9:00 a.m. and 4:00 p.m. (location time) Monday through Friday (excluding holidays). If BLC Management specifies a time outside this window, or selects a time or quantity of Loops that requires BellSouth technicians to work outside normal work hours, overtime charges will apply in addition to the OC and OC-TS

charges. Overtime charges will be applied based on the amount of overtime worked and in accordance with the rates established in the Access Services Tariff, Section E13.2, for each state. The OC-TS charges for an order due on the same day at the same location will be applied on a per Local Service Request (LSR) basis.

2.1.8 **CLEC to CLEC Conversions for Unbundled Loops**

2.1.8.1 The CLEC to CLEC conversion process for unbundled Loops may be used by BLC Management when converting an existing unbundled Loop from another CLEC for the same End User. The Loop type being converted must be included in BLC Management's Interconnection Agreement before requesting a conversion.

2.1.8.2 To utilize the CLEC to CLEC conversion process, the Loop being converted must be the same Loop type with no requested changes to the Loop, must serve the same End User location from the same serving wire center, and must not require an outside dispatch to provision.

2.1.8.3 The Loops converted to BLC Management pursuant to the CLEC to CLEC conversion process shall be provisioned in the same manner and with the same functionality and options as described in this Attachment for the specific Loop type.

2.1.8.4

	Order Coordination (OC)	Order Coordination – Time Specific (OC-TS)	Test Points	DLR	Charge for Dispatch and Testing if No Trouble Found
SL-1 **(Non-Designed)**	Chargeable Option	Chargeable Option	Not available	Chargeable Option – ordered as Engineering Information Document	Charged for Dispatch inside and outside Central Office
UCL-ND **(Non-Designed)**	Chargeable Option	Not Available	Not Available	Chargeable Option – ordered as Engineering Information Document	Charged for Dispatch inside and outside Central Office
Unbundled Voice Loops - SL-2 (including 2- and 4-wire UVL) (Designed)	Included	Chargeable Option	Included	Included	Charged for Dispatch outside Central Office
Unbundled Digital Loop (Designed)	Included	Chargeable Option (except on Universal Digital Channel)	Included (where appropriate)	Included	Charged for Dispatch outside Central Office
Unbundled Copper Loop (Designed)	Chargeable in accordance with Section 2	Not available	Included	Included	Charged for Dispatch outside Central Office
For UVL-SL1 and UCLs, BLC Management must order and will be billed for both OC and OC-TS if requesting OC-TS.					

2.1.9 **<u>Bulk Migration</u>**

2.1.9.1 If BLC Management requests to migrate twenty-five (25) or more UNE-Port/Loop Combination (UNE-P) customers to UNE-Loop (UNE-L) in the same Central Office on the same due date, BLC Management must use the Bulk Migration process, which is described in the BellSouth CLEC Information Package, "UNE-Port/Loop Combination (UNE-P) to UNE-Loop (UNE-L) Bulk Migration." This CLEC Information package, incorporated herein by reference as it may be amended from time to time, is located at

www.interconnection.bellsouth.com/guides/html/unes.html. The rates for the Bulk Migration process shall be the nonrecurring rates associated with the Loop type being requested on the Bulk Migration, as set forth in Exhibit A of this Attachment. Additionally, OSS charges will also apply per LSR generated per customer account as provided for in the Bulk Migration Request. The migration of loops from Integrated Digital Loop Carrier (IDLC) will be done pursuant to Section 2.6 of this Attachment.

2.1.10 **Ordering Guidelines and Processes**

2.1.10.1 For information regarding Ordering Guidelines and Processes for various UNEs, BLC Management should refer to the "Guides" section of the BellSouth Interconnection website, which is incorporated herein by reference, as amended from time to time. The website address is: http://www.interconnection.bellsouth.com/

2.1.10.2 Additional information may also be found in the individual CLEC Information Packages, as amended from time to time and which are incorporated herein by reference, located at the "CLEC UNE Products" website at the following address: http://www.interconnection.bellsouth.com/guides/html/unes.html

2.2 **Unbundled Voice Loops (UVLs)**

2.2.1 BellSouth shall make available the following UVLs:

2.2.1.1 2-wire Analog Voice Grade Loop – SL1 (Non-Designed)

2.2.1.2 2-wire Analog Voice Grade Loop – SL2 (Designed)

2.2.1.3 4-wire Analog Voice Grade Loop (Designed)

2.2.2 Unbundled Voice Loops (UVL) may be provisioned using any type of facility that will support voice grade services. This may include loaded copper, non-loaded copper, digital loop carrier systems, fiber/copper combination (hybrid loop) or a combination of any of these facilities. BellSouth, in the normal course of maintaining, repairing, and configuring its network, may also change the facilities that are used to provide any given voice grade circuit. This change may occur at any time. In these situations, BellSouth will only ensure that the newly provided facility will support voice grade services. BellSouth will not guarantee that BLC Management will be able to continue to provide any advanced services over the new facility. BellSouth will offer UVL in two different service levels - Service Level One (SL1) and Service Level Two (SL2).

2.2.3 Unbundled Voice Loop - SL1 (UVL-SL1) Loops are 2-wire Loop start circuits, will be non-designed, and will not have remote access test points. OC will be offered as a chargeable option on SL1 Loops when reuse of existing facilities has

been requested by BLC Management. BLC Management may also order OC-TS when a specified conversion time is requested. OC-TS is a chargeable option for any coordinated order and is billed in addition to the OC charge. An Engineering Information (EI) document can be ordered as a chargeable option. The EI document provides Loop Make-Up information which is similar to the information normally provided in a Design Layout Record (DLR). Upon issuance of a non-coordinated order in the service order system, SL1 Loops will be activated on the due date in the same manner and time frames that BellSouth normally activates POTS-type Loops for its End Users.

2.2.4 For an additional charge BellSouth will make available Loop Testing so that BLC Management may request further testing on new UVL-SL1 Loops. Rates for Loop Testing are as set forth in Exhibit A of this Attachment.

2.2.5 Unbundled Voice Loop – SL2 (UVL-SL2) Loops may be 2-wire or 4-wire circuits, shall have remote access test points, and will be designed with a DLR provided to BLC Management. SL2 circuits can be provisioned with loop start, ground start or reverse battery signaling. OC is provided as a standard feature on SL2 Loops. The OC feature will allow BLC Management to coordinate the installation of the Loop with the disconnect of an existing customer's service and/or number portability service. In these cases, BellSouth will perform the order conversion with standard order coordination at its discretion during normal work hours.

2.3 **Unbundled Digital Loops**

2.3.1 BellSouth will offer Unbundled Digital Loops (UDL). UDLs are service specific, will be designed, will be provisioned with test points (where appropriate), and will come standard with OC and a DLR. The various UDLs are intended to support a specific digital transmission scheme or service.

2.3.2 BellSouth shall make available the following UDLs, subject to restrictions set forth herein:

2.3.2.1 2-wire Unbundled ISDN Digital Loop

2.3.2.2 2-wire Unbundled ADSL Compatible Loop

2.3.2.3 2-wire Unbundled HDSL Compatible Loop

2.3.2.4 4-wire Unbundled HDSL Compatible Loop

2.3.2.5 4-wire Unbundled DS1 Digital Loop

2.3.2.6 4-wire Unbundled Digital Loop/DS0 – 64 kbps, 56 kbps and below

2.3.2.7 DS3 Loop

2.3.2.8 STS-1 Loop

2.3.3 2-Wire Unbundled ISDN Digital Loops will be provisioned according to industry standards for 2-Wire Basic Rate ISDN services and will come standard with a test point, OC, and a DLR. BLC Management will be responsible for providing BellSouth with a Service Profile Identifier (SPID) associated with a particular ISDN-capable Loop and End User. With the SPID, BellSouth will be able to adequately test the circuit and ensure that it properly supports ISDN service.

2.3.3.1 Upon the Effective Date of this Agreement, Universal Digital Channel (UDC) elements will no longer be offered by BellSouth and no new orders for UDC will be accepted. Any existing UDCs that were provisioned prior to the Effective Date of this Agreement will be grandfathered at the rates set forth in the Parties' interconnection agreement that was in effect immediately prior to the Effective Date of this Agreement. Existing UDCs that were provisioned prior to the Effective Date of this Agreement may remain connected, maintained and repaired according to BellSouth's TR73600 until such time as they are disconnected by BLC Management or BellSouth provides ninety (90) calendar days notice that such UDC must be terminated. BLC Management may order an ISDN loop, if available, to provide the same functionality as the previously offered UDC product.

2.3.4 2-Wire ADSL-Compatible Loop. This is a designed Loop that is provisioned according to Revised Resistance Design (RRD) criteria and may be up to 18,000 feet long and may have up to 6,000 feet of bridged tap (inclusive of Loop length). The Loop is a 2-wire circuit and will come standard with a test point, OC, and a DLR.

2.3.5 2-Wire or 4-Wire HDSL-Compatible Loop. This is a designed Loop that meets Carrier Serving Area (CSA) specifications, may be up to 12,000 feet long and may have up to 2,500 feet of bridged tap (inclusive of Loop length). It may be a 2-wire or 4-wire circuit and will come standard with a test point, OC, and a DLR.

2.3.6 4-Wire Unbundled DS1 Digital Loop. This is a designed 4-wire Loop that is provisioned according to industry standards for DS1 or Primary Rate ISDN services and will come standard with a test point, OC, and a DLR. A DS1 Loop may be provisioned over a variety of loop transmission technologies including copper, HDSL-based technology or fiber optic transport systems. It will include a 4-Wire DS1 Network Interface at the End User's location.

2.3.7 4-Wire Unbundled Digital/DS0 Loop. These are designed 4-wire Loops that may be configured as 64kbps, 56kbps, 19kbps, and other sub-rate speeds associated with digital data services and will come standard with a test point, OC, and a DLR.

2.3.8 DS3 Loop**.** DS3 Loop is a two-point digital transmission path which provides for simultaneous two-way transmission of serial, bipolar, return-to-zero isochronous digital electrical signals at a transmission rate of 44.736 megabits per second

(Mbps) that is dedicated to the use of the ordering CLEC in its provisioning of local exchange and associated exchange access services. It may provide transport for twenty-eight (28) DS1 channels, each of which provides the digital equivalent of twenty-four (24) analog voice grade channels. The interface to unbundled dedicated DS3 transport is a metallic-based electrical interface.

2.3.9 STS-1 Loop**.** STS-1 Loop is a high-capacity digital transmission path with SONET VT1.5 mapping that is dedicated for the use of the ordering customer for the purpose of provisioning local exchange and associated exchange access services. It is a two-point digital transmission path which provides for simultaneous two-way transmission of serial bipolar return-to-zero synchronous digital electrical signals at a transmission rate of 51.84 megabits per second (Mbps). It may provide transport for twenty-eight (28) DS1 channels, each of which provides the digital equivalent of twenty-four (24) analog voice grade channels. The interface to unbundled dedicated STS-1 transport is a metallic-based electrical interface.

2.3.10 Both DS3 Loop and STS-1 Loop require a Service Inquiry (SI) in order to ascertain availability.

2.3.11 If DS3/STS-1 Loops are not readily available but can be made available through routine network modifications, as defined by the FCC, BLC Management may request BellSouth to perform such routine network modifications. The request may not be used to place fiber. Each request will be handled as a project on an individual case basis. BellSouth will provide a price quote for the request, and upon receipt of payment by BLC Management, BellSouth shall perform the routine network modifications.

2.3.12 DS3 services come with a test point and a DLR. Mileage is airline miles, rounded up and a minimum of one mile applies. BellSouth TR 73501 LightGate®Service Interface and Performance Specifications, Issue D, June 1995 applies to DS3 services.

2.3.13 BLC Management may access a total capacity of two (2) DS3s per End User location at the Network Element rates set forth in Exhibit A.

2.4 **Unbundled Copper Loops (UCL)**

2.4.1 BellSouth shall make available Unbundled Copper Loops (UCLs). The UCL is a copper twisted pair Loop that is unencumbered by any intervening equipment (e.g., filters, load coils, range extenders, digital loop carrier, or repeaters) and is not intended to support any particular telecommunications service. The UCL will be offered in two types – Designed and Non-Designed.

2.4.2 **Unbundled Copper Loop – Designed (UCL-D)**

2.4.2.1 The UCL-D will be provisioned as a dry copper twisted pair (2- or 4-wire) Loop that is unencumbered by any intervening equipment (e.g., filters, load coils, range extenders, digital loop carrier, or repeaters).

2.4.2.2 A UCL-D will be 18,000 feet or less in length and is provisioned according to Resistance Design parameters, may have up to 6,000 feet of bridged tap and will have up to 1300 Ohms of resistance.

2.4.2.3 The UCL-D is a designed circuit, is provisioned with a test point, and comes standard with a DLR. OC is a chargeable option for a UCL-D; however, OC is always required on UCLs where a reuse of existing facilities has been requested by BLC Management.

2.4.2.4 These Loops are not intended to support any particular services and may be utilized by BLC Management to provide a wide-range of telecommunications services as long as those services do not adversely affect BellSouth's network. This facility will include a Network Interface Device (NID) at the customer's location for the purpose of connecting the Loop to the customer's inside wire.

2.4.2.5 Upon the Effective Date of this Agreement, Unbundled Copper Loop – Long (UCL-L) elements will no longer be offered by BellSouth and no new orders for UCL-L will be accepted. Any existing UCL-Ls that were provisioned prior to the Effective Date of this Agreement will be grandfathered at the rates set forth in the Parties' interconnection agreement that was in effect immediately prior to the Effective Date of this Agreement. Existing UCL-Ls that were provisioned prior to the Effective Date of this Agreement may remain connected, maintained and repaired according to BellSouth's TR73600 and may remain connected until such time as they are disconnected by BLC Management or BellSouth provides ninety (90) calendar days notice that such UCL-L must be terminated.

2.4.3 **Unbundled Copper Loop – Non-Designed (UCL-ND)**

2.4.3.1 The UCL–ND is provisioned as a dedicated 2-wire metallic transmission facility from BellSouth's Main Distribution Frame (MDF) to a customer's premises (including the NID). The UCL-ND will be a "dry copper" facility in that it will not have any intervening equipment such as load coils, repeaters, or digital access main lines (DAMLs), and may have up to 6,000 feet of bridged tap between the End User's premises and the serving wire center. The UCL-ND typically will be 1300 Ohms resistance and in most cases will not exceed 18,000 feet in length, although the UCL-ND will not have a specific length limitation. For Loops less than 18,000 feet and with less than 1300 Ohms resistance, the Loop will provide a voice grade transmission channel suitable for Loop start signaling and the transport of analog voice grade signals. The UCL-ND will not be designed and will not be provisioned with either a DLR or a test point.

2.4.3.2 The UCL-ND facilities may be mechanically assigned using BellSouth's assignment systems. Therefore, the Loop Makeup (LMU) process is not required to order and provision the UCL-ND. However, BLC Management can request LMU for which additional charges would apply.

2.4.3.3 For an additional charge, BellSouth also will make available Loop Testing so that BLC Management may request further testing on the UCL-ND. Rates for Loop Testing are as set forth in Exhibit A of this Attachment.

2.4.3.4 UCL-ND Loops are not intended to support any particular service and may be utilized by BLC Management to provide a wide-range of telecommunications services as long as those services do not adversely affect BellSouth's network. The UCL-ND will include a NID at the customer's location for the purpose of connecting the Loop to the customer's inside wire.

2.4.3.5 OC will be provided as a chargeable option and may be utilized when the UCL-ND provisioning is associated with the reuse of BellSouth facilities. OC-TS does not apply to this product.

2.4.3.6 BLC Management may use BellSouth's Unbundled Loop Modification (ULM) offering to remove excessive bridged taps and/or load coils from any copper Loop within the BellSouth network. Therefore, some Loops that would not qualify as UCL-ND could be transformed into Loops that do qualify, using the ULM process.

2.5 **Unbundled Loop Modifications (Line Conditioning)**

2.5.1 Line Conditioning is defined as routine network modification that BellSouth regularly undertakes to provide xDSL services to its own customers. This may include the removal of any device, from a copper Loop or copper Sub-loop that may diminish the capability of the Loop or Sub-loop to deliver high-speed switched wireline telecommunications capability, including xDSL service. Such devices include, but are not limited to, load coils, excessive bridged taps, low pass filters, and range extenders. Excessive bridged taps are bridged taps that serves no network design purpose and that are beyond the limits set according to industry standards and/or the BellSouth TR 73600.

2.5.2 BellSouth will remove load coils only on copper loops and sub-loops that are less than 18,000 feet in length.

2.5.3 For any copper loop being ordered by BLC Management which has over 6,000 feet of combined bridged tap will be modified, upon request from BLC Management, so that the loop will have a maximum of 6,000 feet of bridged tap. This modification will be performed at no additional charge to BLC Management. Loop conditioning orders that require the removal of bridged tap that serves no network design purpose on a copper loop that will result in a combined total of

bridged tap between 2,500 and 6,000 feet will be performed at the rates set forth in Exhibit A of this Attachment.

2.5.4 BLC Management may request removal of any unnecessary and non-excessive bridged tap (bridged tap between 0 and 2,500 feet which serves no network design purpose), at rates pursuant to BellSouth's Special Construction Process as mutually agreed to by the Parties.

2.5.5 Rates for ULM are as set forth in Exhibit A of this Attachment.

2.5.6 BellSouth will not modify a Loop in such a way that it no longer meets the technical parameters of the original Loop type (e.g., voice grade, ADSL, etc.) being ordered.

2.5.7 If BLC Management requests ULM on a reserved facility for a new loop order, BellSouth may perform a pair change and provision a different loop facility in lieu of the reserved facility with ULM if feasible. The loop provisioned will meet or exceed specifications of the requested loop facility as modified. BLC Management will not be charged for ULM if a different loop is provisioned. For loops that require a DLR or its equivalent, BellSouth will provide LMU detail of the loop provisioned.

2.5.8 BLC Management shall request Loop make up information pursuant to this Attachment prior to submitting a service inquiry and/or a LSR for the Loop type that BLC Management desires BellSouth to condition.

2.5.9 When requesting ULM for a Loop that BellSouth has previously provisioned for BLC Management, BLC Management will submit a service inquiry to BellSouth. If a spare Loop facility that meets the loop modification specifications requested by BLC Management is available at the location for which the ULM was requested, BLC Management will have the option to change the Loop facility to the qualifying spare facility rather than to provide ULM. In the event that BellSouth changes the Loop facility in lieu of providing ULM, BLC Management will not be charged for ULM but will only be charged the service order charges for submitting an order.

2.6 **Loop Provisioning Involving Integrated Digital Loop Carriers**

2.6.1 Where BLC Management has requested an Unbundled Loop and BellSouth uses IDLC systems to provide the local service to the End User and BellSouth has a suitable alternate facility available, BellSouth will make such alternative facilities available to BLC Management. If a suitable alternative facility is not available, then to the extent it is technically feasible, BellSouth will implement one of the following alternative arrangements for BLC Management (e.g. hairpinning):

1. Roll the circuit(s) from the IDLC to any spare copper that exists to the customer premises.

2. Roll the circuit(s) from the IDLC to an existing DLC that is not integrated.
3. If capacity exists, provide "side-door" porting through the switch.
4. If capacity exists, provide "Digital Access Cross Connect System (DACS)-door" porting (if the IDLC routes through a DACS prior to integration into the switch).

2.6.2 Arrangements 3 and 4 above require the use of a designed circuit. Therefore, non-designed Loops such as the SL1 voice grade and UCL-ND may not be ordered in these cases.

2.6.3 If no alternate facility is available, and upon request from BLC Management, and if agreed to by both Parties, BellSouth may utilize its Special Construction (SC) process to determine the additional costs required to provision facilities. BLC Management will then have the option of paying the one-time SC rates to place the Loop.

2.7 **Network Interface Device**

2.7.1 The NID is defined as any means of interconnection of the End User's customer premises wiring to BellSouth's distribution plant, such as a cross connect device used for that purpose. The NID is a single-line termination device or that portion of a multiple line termination device required to terminate a single line or circuit at the premises. The NID features two independent chambers or divisions that separate the service provider's network from the End User's customer premises wiring. Each chamber or division contains the appropriate connection points or posts to which the service provider and the End User each make their connections. The NID provides a protective ground connection and is capable of terminating cables such as twisted pair cable.

2.7.2 BellSouth shall permit BLC Management to connect BLC Management's Loop facilities to the End User's customer premises wiring through the BellSouth NID or at any other technically feasible point.

2.7.3 **Access to NID**

2.7.3.1 BLC Management may access the End User's customer premises wiring by any of the following means and BLC Management shall not disturb the existing form of electrical protection and shall maintain the physical integrity of the NID:

2.7.3.1.1 BellSouth shall allow BLC Management to connect its Loops directly to BellSouth's multi-line residential NID enclosures that have additional space and are not used by BellSouth or any other telecommunications carriers to provide service to the premises.

2.7.3.1.2 Where an adequate length of the End User's customer premises wiring is present and environmental conditions permit, either Party may remove the customer

premises wiring from the other Party's NID and connect such wiring to that Party's own NID;

2.7.3.1.3 Either Party may enter the subscriber access chamber or dual chamber NID enclosures for the purpose of extending a connect divisioned or spliced jumper wire from the customer premises wiring through a suitable "punch-out" hole of such NID enclosures; or

2.7.3.1.4 BLC Management may request BellSouth to make other rearrangements to the End User customer premises wiring terminations or terminal enclosure on a time and materials cost basis.

2.7.3.2 In no case shall either Party remove or disconnect the other Party's Loop facilities from either Party's NIDs, enclosures, or protectors unless the applicable Commission has expressly permitted the same and the disconnecting Party provides prior notice to the other Party. In such cases, it shall be the responsibility of the Party disconnecting Loop facilities to leave undisturbed the existing form of electrical protection and to maintain the physical integrity of the NID. It will be BLC Management's responsibility to ensure there is no safety hazard, and BLC Management will hold BellSouth harmless for any liability associated with the removal of the BellSouth Loop from the BellSouth NID. Furthermore, it shall be the responsibility of the disconnecting Party, once the other Party's Loop has been disconnected from the NID, to reconnect the disconnected Loop to a nationally recognized testing laboratory listed station protector, which has been grounded as per Article 800 of the National Electrical Code. If no spare station protector exists in the NID, the disconnected Loop must be appropriately cleared, capped and stored.

2.7.3.3 BLC Management shall not remove or disconnect ground wires from BellSouth's NIDs, enclosures, or protectors.

2.7.3.4 BLC Management shall not remove or disconnect NID modules, protectors, or terminals from BellSouth's NID enclosures.

2.7.3.5 Due to the wide variety of NID enclosures and outside plant environments, BellSouth will work with BLC Management to develop specific procedures to establish the most effective means of implementing this section if the procedures set forth herein do not apply to the NID in question.

2.7.4 <u>Technical Requirements</u>

2.7.4.1 The NID shall provide an accessible point of interconnection and shall maintain a connection to ground.

2.7.4.2 If an existing NID is accessed, it shall be capable of transferring electrical analog or digital signals between the End User's customer premises and the distribution media and/or cross connect to BLC Management's NID.

2.7.4.3 Existing BellSouth NIDs will be provided in "as is" condition. BLC Management may request BellSouth to do additional work to the NID on a time and material basis. When BLC Management deploys its own local Loops in a multiple-line termination device, BLC Management shall specify the quantity of NID connections that it requires within such device.

2.8 **Sub-loop Elements**

2.8.1 Where facilities permit, BellSouth shall offer access to its Unbundled Sub-Loop (USL) elements as specified herein.

2.8.2 **Unbundled Sub-Loop Distribution**

2.8.2.1 The Unbundled Sub-Loop Distribution facility is a dedicated transmission facility that BellSouth provides from an End User's point of demarcation to a BellSouth cross-connect device. The BellSouth cross-connect device may be located within a remote terminal (RT) or a stand-alone cross-box in the field or in the equipment room of a building. The unbundled sub-loop distribution media is a copper twisted pair that can be provisioned as a 2-Wire or 4-Wire facility. BellSouth will make available the following sub-loop distribution offerings where facilities exist:

Unbundled Sub-Loop Distribution – Voice Grade
Unbundled Copper Sub-Loop
Unbundled Sub-Loop Distribution – Intrabuilding Network Cable (aka riser cable)

2.8.2.2 Unbundled Sub-Loop Distribution – Voice Grade (USLD-VG) is a copper sub-loop facility from the cross-box in the field up to and including the point of demarcation at the End User's premises and may have load coils.

2.8.2.3 Unbundled Copper Sub-Loop (UCSL) is a copper facility of any length provided from the cross-box in the field up to and including the End User's point of demarcation. If available, this facility will not have any intervening equipment such as load coils between the End User and the cross-box.

2.8.2.3.1 If BLC Management requests a UCSL and it is not available, BLC Management may request the copper Sub-Loop facility be modified pursuant to the ULM process to remove load coils and/or excessive bridged taps. If load coils and/or excessive bridged taps are removed, the facility will be classified as a UCSL.

2.8.2.4 Unbundled Sub-Loop Distribution – Intrabuilding Network Cable (USLD-INC) is the distribution facility owned or controlled by BellSouth inside a building or between buildings on the same property that is not separated by a public street or

road. USLD-INC includes the facility from the cross connect device in the building equipment room up to and including the point of demarcation at the End User's premises.

2.8.2.4.1 Upon request for USLD-INC from BLC Management, BellSouth will install a cross connect panel in the building equipment room for the purpose of accessing USLD-INC pairs from a building equipment room. The cross-connect panel will function as a single point of interconnection (SPOI) for USLD-INC and will be accessible by multiple carriers as space permits. BellSouth will place cross-connect blocks in 25-pair increments for BLC Management's use on this cross-connect panel. BLC Management will be responsible for connecting its facilities to the 25-pair cross-connect block(s).

2.8.2.5 For access to Voice Grade USLD and UCSL, BLC Management shall install a cable to the BellSouth cross-box pursuant to the terms and conditions for physical collocation for remote sites set forth in this Agreement. This cable would be connected by a BellSouth technician within the BellSouth cross-box during the set-up process. BLC Management's cable pairs can then be connected to BellSouth's USL within the BellSouth cross-box by the BellSouth technician.

2.8.2.6 Through the SI process, BellSouth will determine whether access to Unbundled Sub-Loops at the location requested by BLC Management is technically feasible and whether sufficient capacity exists in the cross-box. If existing capacity is sufficient to meet BLC Management's request, then BellSouth will perform the site set-up as described in the CLEC Information Package, located at the website address: http://www.interconnection.bellsouth.com/products/html/unes.html.

2.8.2.7 The site set-up must be completed before BLC Management can order sub-loop pairs. For the site set-up in a BellSouth cross-connect box in the field, BellSouth will perform the necessary work to splice BLC Management's cable into the cross-connect box. For the site set-up inside a building equipment room, BellSouth will perform the necessary work to install the cross-connect panel and the connecting block(s) that will be used to provide access to the requested USLs.

2.8.2.8 Once the site set-up is complete, BLC Management will request sub-loop pairs through submission of a LSR form to the Local Carrier Service Center (LCSC). OC is required with USL pair provisioning when BLC Management requests reuse of an existing facility, and the Order Coordination charge shall be billed in addition to the USL pair rate. For expedite requests by BLC Management for sub-loop pairs, expedite charges will apply for intervals less than five (5) calendar days.

2.8.2.9 Unbundled Sub-Loops will be provided in accordance with technical reference TR73600.

2.8.3 **Unbundled Network Terminating Wire (UNTW)**

2.8.3.1 UNTW is unshielded twisted copper wiring that is used to extend circuits from an intra-building network cable terminal or from a building entrance terminal to an individual End User's point of demarcation. It is the final portion of the Loop that in multi-subscriber configurations represents the point at which the network branches out to serve individual subscribers.

2.8.3.2 This element will be provided in Multi-Dwelling Units (MDUs) and/or Multi-Tenants Units (MTUs) where either Party owns wiring all the way to the End User's premises. Neither Party will provide this element in locations where the property owner provides its own wiring to the End User's premises, where a third party owns the wiring to the End User's premises.

2.8.3.3 Requirements

2.8.3.3.1 On a multi-unit premises, upon request of the other Party (Requesting Party), the Party owning the network terminating wire (Provisioning Party) will provide access to UNTW pairs on an Access Terminal that is suitable for use by multiple carriers at each Garden Terminal or Wiring Closet.

2.8.3.3.2 The Provisioning Party shall not be required to install new or additional NTW beyond existing NTW to provision the services of the Requesting Party.

2.8.3.3.3 In existing MDUs and/or MTUs in which BellSouth does not own or control wiring (INC/NTW) to the End Users premises, BLC Management will install UNTW Access Terminals for BellSouth at no additional charge.

2.8.3.3.4 In situations in which BellSouth activates a UNTW pair, BellSouth will compensate BLC Management for each pair activated commensurate to the price specified in BLC Management's Agreement.

2.8.3.3.5 Upon receipt of the UNTW SI requesting access to the Provisioning Party's UNTW pairs at a multi-unit premises, representatives of both Parties will participate in a meeting at the site of the requested access. The purpose of the site visit will include discussion of the procedures for installation and location of the Access Terminals. By request of the Requesting Party, an Access Terminal will be installed either adjacent to each of the Provisioning Party's Garden Terminal or inside each Wiring Closet. The Requesting Party will deliver and connect its central office facilities to the UNTW pairs within the Access Terminal. The Requesting Party may access any available pair on an Access Terminal. A pair is available when a pair is not being utilized to provide service or where the End User has requested a change in its local service provider to the Requesting Party. Prior to connecting the Requesting Party's service on a pair previously used by the Provisioning Party, the Requesting Party is responsible for ensuring the End User is no longer using the Provisioning Party's service or another CLEC's service before accessing UNTW pairs.

2.8.3.3.6 Access Terminal installation intervals will be established on an individual case basis.

2.8.3.3.7 The Requesting Party is responsible for obtaining the property owner's permission for the Provisioning Party to install an Access Terminal(s) on behalf of the Requesting Party. The submission of the SI by the Requesting Party will serve as certification by the Requesting Party that such permission has been obtained. If the property owner objects to Access Terminal installations that are in progress or subsequent to completion and demands removal of Access Terminals, the Requesting Party will be responsible for costs associated with removing Access Terminals and restoring the property to its original state prior to Access Terminals being installed.

2.8.3.3.8 The Requesting Party shall indemnify and hold harmless the Provisioning Party against any claims of any kind that may arise out of the Requesting Party's failure to obtain the property owner's permission. The Requesting Party will be billed for nonrecurring and recurring charges for accessing UNTW pairs at the time the Requesting Party activates the pair(s). The Requesting Party will notify the Provisioning Party within five (5) business days of activating UNTW pairs using the LSR form.

2.8.3.3.9 If a trouble exists on a UNTW pair, the Requesting Party may use an alternate spare pair that serves that End User if a spare pair is available. In such cases, the Requesting Party will re-terminate its existing jumper from the defective pair to the spare pair. Alternatively, the Requesting Party will isolate and report troubles in the manner specified by the Provisioning Party. The Requesting Party must tag the UNTW pair that requires repair. If the Provisioning Party dispatches a technician on a reported trouble call and no UNTW trouble is found, the Provisioning Party will charge Requesting Party for time spent on the dispatch and testing the UNTW pair(s).

2.8.3.3.10 If the Requesting Party initiates the Access Terminal installation and the Requesting Party has not activated at least ten (10) percent of the capacity of the Access Terminal installed pursuant to the Requesting Party's request for an Access Terminal within six (6) months of installation of the Access Terminal, the Provisioning Party will bill the Requesting Party a nonrecurring charge equal to the actual cost of provisioning the Access Terminal.

2.8.3.3.11 If the Provisioning Party determines that the Requesting Party is using the UNTW pairs without reporting the activation of the pairs, the Requesting Party will be billed for the use of that pair back to the date the End User began receiving service from the Requesting Party at that location. Upon request, the Requesting Party will provide copies of its billing record to substantiate such date. If the Requesting Party fails to provide such records, then the Provisioning Party will bill the Requesting Party back to the date of the Access Terminal installation.

2.8.4 **Unbundled Sub-Loop Feeder**

2.8.4.1 Upon the Effective Date of this Agreement, Unbundled Sub-Loop Feeder (USLF) elements will no longer be offered by BellSouth at TELRIC prices. Within ninety (90) calendar days of the Effective Date of this Agreement, BLC Management will either negotiate market-based rates for these elements or will issue orders to have these elements disconnected. If, after this ninety (90)-day period, market-based rates have not been negotiated and BLC Management has not issued the appropriate disconnect orders, BellSouth may immediately disconnect any remaining USLF elements and will bill BLC Management any applicable disconnect charges.

2.8.5 **Unbundled Loop Concentration**

2.8.5.1 Upon the Effective Date of this Agreement, the Unbundled Loop Concentration (ULC) element will no longer be offered by BellSouth and no new orders for ULC will be accepted. Any existing ULCs that were provisioned prior to the Effective Date of this Agreement will be grandfathered at the rates set forth in the Parties' interconnection agreement that was in effect immediately prior to this Agreement and may remain connected, maintained and repaired according to BellSouth's TR73600 until such time as they are disconnected by BLC Management, or BellSouth provides ninety (90) calendar days notice that such ULC must be terminated.

2.8.6 **Dark Fiber Loop**

2.8.6.1 Dark Fiber Loop is an unused optical transmission facility, without attached signal regeneration, multiplexing, aggregation or other electronics, from the demarcation point at an End User's premises to the End User's serving wire center. Dark Fiber Loops may be strands of optical fiber existing in aerial or underground structure. BellSouth will not provide line terminating elements, regeneration or other electronics necessary for BLC Management to utilize Dark Fiber Loops.

2.8.6.2 If Dark Fiber Loop is not readily available but can be made available through routine network modifications, as defined by the FCC, BLC Management may request BellSouth to perform such routine network modifications. The request may not be used to place fiber. Each request will be handled as a project on an individual case basis. BellSouth will provide a price quote for the request, and upon receipt of payment by BLC Management, BellSouth shall perform the routine network modifications.

2.8.6.3 Requirements

2.8.6.3.1 BellSouth shall make available Dark Fiber Loop where it exists in BellSouth's network and where, as a result of future building or deployment, it becomes available. Dark Fiber Loop will not be deemed available if: (1) it is used by

BellSouth for maintenance and repair purposes; (2) it is designated for use pursuant to a firm order placed by another customer; (3) it is restricted for use by all carriers, including BellSouth, because of transmission problems or because it is scheduled for removal due to documented changes to roads and infrastructure; or (4) BellSouth has plans to use the fiber within a two-year planning period. BellSouth is not required to place the fiber for Dark Fiber Loop if none is available.

2.8.6.3.2 BLC Management is solely responsible for testing the quality of the Dark Fiber to determine its usability and performance specifications.

2.8.6.3.3 BellSouth shall use its commercially reasonable efforts to provide to BLC Management information regarding the location, availability and performance of Dark Fiber Loop within ten (10) business days after receiving a SI from BLC Management.

2.8.6.3.4 If the requested Dark Fiber Loop is available, BellSouth shall use commercially reasonable efforts to provision the Dark Fiber Loop to BLC Management within twenty (20) business days after BLC Management submits a valid, error free LSR. Provisioning includes identification of appropriate connection points (e.g., Light Guide Interconnection (LGX)) to enable BLC Management to connect BLC Management provided transmission media (e.g., optical fiber) or equipment to the Dark Fiber Loop.

2.9 **Loop Makeup**

2.9.1 Description of Service

2.9.1.1 BellSouth shall make available to BLC Management LMU information so that BLC Management can make an independent judgment about whether the Loop is capable of supporting the advanced services equipment BLC Management intends to install and the services BLC Management wishes to provide. This section addresses LMU as a preordering transaction, distinct from BLC Management ordering any other service(s). Loop Makeup Service Inquiries (LMUSI) and mechanized LMU queries for preordering LMU are likewise unique from other preordering functions with associated SIs as described in this Agreement.

2.9.1.2 BellSouth will provide BLC Management LMU information consisting of the composition of the Loop material (copper/fiber); the existence, location and type of equipment on the Loop, including but not limited to digital loop carrier or other remote concentration devices, feeder/distribution interfaces, bridged taps, load coils, pair-gain devices; the Loop length; the wire gauge and electrical parameters.

2.9.1.3 BellSouth’s LMU information is provided to BLC Management as it exists either in BellSouth's databases or in its hard copy facility records. BellSouth does not guarantee accuracy or reliability of the LMU information provided.

2.9.1.4 BellSouth's provisioning of LMU information to the requesting CLEC for facilities is contingent upon either BellSouth or the requesting CLEC controlling the Loop(s) that serve the service location for which LMU information has been requested by the CLEC. The requesting CLEC is not authorized to receive LMU information on a facility used or controlled by another CLEC unless BellSouth receives a Letter of Authorization (LOA) from the voice CLEC (owner) or its authorized agent on the LMUSI submitted by the requesting CLEC.

2.9.1.5 BLC Management may choose to use equipment that it deems will enable it to provide a certain type and level of service over a particular BellSouth Loop as long as that equipment does not disrupt other services on the BellSouth network. The determination shall be made solely by BLC Management and BellSouth shall not be liable in any way for the performance of the advanced data services provisioned over said Loop. The specific Loop type (ADSL, HDSL, or otherwise) ordered on the LSR must match the LMU of the Loop reserved taking into consideration any requisite line conditioning. The LMU data is provided for informational purposes only and does not guarantee BLC Management's ability to provide advanced data services over the ordered Loop type. Further, if BLC Management orders Loops that do not require a specific facility medium (i.e. copper only) or Loops that are not intended to support advanced services (such as UV-SL1, UV-SL2, or ISDN compatible Loops) and that are not inventoried as advanced services Loops, the LMU information for such Loops is subject to change at any time due to modifications and/or upgrades to BellSouth's network. BLC Management is fully responsible for any of its service configurations that may differ from BellSouth's technical standard for the Loop type ordered.

2.9.2 **Submitting Loop Makeup Service Inquiries**

2.9.2.1 BLC Management may obtain LMU information by submitting a mechanized LMU query or a Manual LMUSI. Mechanized LMUs should be submitted through BellSouth's OSS interfaces. After obtaining the Loop information from the mechanized LMU process, if BLC Management needs further Loop information in order to determine Loop service capability, BLC Management may initiate a separate Manual Service Inquiry for a separate nonrecurring charge as set forth in Exhibit A of this Attachment.

2.9.2.2 Manual LMUSIs shall be submitted according to the guidelines in the LMU CLEC Information Package, incorporated herein by reference, as it may be amended from time to time, which can be found at the following BellSouth website: http://interconnection.bellsouth.com/guides/html/unes.html . The service interval for the return of a Manual LMUSI is three (3) business days. Manual LMUSIs are not subject to expedite requests. This service interval is distinct from the interval applied to the subsequent service order.

2.9.3 **Loop Reservations**

2.9.3.1 For a Mechanized LMUSI, BLC Management may reserve up to ten (10) Loop facilities. For a Manual LMUSI, BLC Management may reserve up to three (3) Loop facilities.

2.9.3.2 BLC Management may reserve facilities for up to four (4) business days for each facility requested through LMU from the time the LMU information is returned to BLC Management. During and prior to BLC Management placing an LSR, the reserved facilities are rendered unavailable to other customers, including BellSouth. If BLC Management does not submit an LSR for a UNE service on a reserved facility within the four (4)-day reservation timeframe, the reservation of that spare facility will become invalid and the facility will be released.

2.9.3.3 Charges for preordering Manual LMUSI or Mechanized LMU are separate from any charges associated with ordering other services from BellSouth.

2.9.3.4 All LSRs issued for reserved facilities shall reference the facility reservation number as provided by BellSouth. BLC Management will not be billed any additional LMU charges for the Loop ordered on such LSR. If, however, BLC Management does not reserve facilities upon an initial LMUSI, BLC Management's placement of an order for an advanced data service type facility will incur the appropriate billing charges to include SI and reservation per Exhibit A of this Attachment.

2.9.3.5 Where BLC Management has reserved multiple Loop facilities on a single reservation, BLC Management may not specify which facility shall be provisioned when submitting the LSR. For those occasions, BellSouth will assign to BLC Management, subject to availability, a facility that meets the BellSouth technical standards of the BellSouth type Loop as ordered by BLC Management.

3 Line Sharing

3.1 General

3.1.1 Line Sharing is defined as the process by which BLC Management provides digital subscriber line service over the same copper loop that BellSouth uses to provide voice service, with BellSouth using the low frequency portion of the loop and BLC Management using the high frequency spectrum (as defined below) of the loop.

3.1.2 Line Sharing arrangements in service as of October 1, 2003, will be grandfathered until the earlier of the date the End User discontinues or moves service with BLC Management. Grandfathered arrangements pursuant to this Section will be billed at the rates set forth in Exhibit A.

3.1.3 For the period from October 2, 2003, through October 1, 2004, BLC Management may request new Line Sharing arrangements. For Line Sharing arrangements placed in service between October 2, 2003, and October 1, 2004, the rates will be

as set forth in Exhibit A. After October 1, 2004, BLC Management may not request new Line Sharing arrangements under the terms of this Agreement.

3.1.4 The rates set forth herein will be applied retroactively back to the date set forth in the Triennial Review Order.

3.1.5 As of the earlier of October 2, 2006, or the date that the End User discontinues or moves service with BLC Management, all Line Sharing arrangements pursuant to Section 3.1.3 of this Attachment shall be terminated.

3.1.6 The High Frequency Spectrum is defined as the frequency range above the voiceband on a copper Loop facility carrying analog circuit-switched voiceband transmissions. Access to the High Frequency Spectrum is intended to allow BLC Management the ability to provide Digital Subscriber Line (xDSL) data services to the End User for which BellSouth provides voice services. The High Frequency Spectrum shall be available for any version of xDSL complying with Spectrum Management Class 5 of ANSI T1.417, American National Standard for Telecommunications, Spectrum Management for Loop Transmission Systems. BellSouth will continue to have access to the low frequency portion of the Loop spectrum (from 300 Hertz to at least 3000 Hertz, and potentially up to 3400 Hertz, depending on equipment and facilities) for the purposes of providing voice service. BLC Management shall only use xDSL technology that is within the PSD mask for Spectrum Management Class 5 as found in the above-mentioned document.

3.1.7 Access to the High Frequency Spectrum requires an unloaded, 2-wire copper Loop. An unloaded Loop is a copper Loop with no load coils, low-pass filters, range extenders, DAMLs, or similar devices and minimal bridged taps consistent with ANSI T1.413 and T1.601.

3.1.8 BellSouth will provide Loop Modification to BLC Management on an existing Loop in accordance with procedures as specified in Section 2 of this Attachment. BellSouth is not required to modify a Loop for access to the High Frequency spectrum if modification of that Loop significantly degrades BellSouth's voice service. If BLC Management requests that BellSouth modify a Loop and such modification significantly degrades the voice services on the Loop, BLC Management shall pay for the Loop to be restored to its original state.

3.1.9 Line Sharing shall only be available on Loops on which BellSouth is also providing, and continues to provide, analog voice service directly to the End User. In the event the End User terminates its BellSouth provided voice service for any reason, or in the event BellSouth disconnects the End User's voice service pursuant to its tariffs or applicable law, and BLC Management desires to continue providing xDSL service on such Loop, BLC Management shall be required to purchase a full stand-alone Loop UNE. To the extent commercially practicable, BellSouth shall give BLC Management notice in a reasonable time prior to

disconnect, which notice shall give BLC Management an adequate opportunity to notify BellSouth of its intent to purchase such Loop. In those cases in which BellSouth no longer provides voice service to the End User and BLC Management purchases the full stand-alone Loop, BLC Management may elect the type of Loop it will purchase. BLC Management will pay the appropriate recurring and nonrecurring rates for such Loop as set forth in Exhibit A to this Attachment. In the event BLC Management purchases a voice grade Loop, BLC Management acknowledges that such Loop may not remain xDSL compatible.

3.1.10 If BLC Management reports a trouble on the High Frequency Spectrum of a Loop and no trouble actually exists on the BellSouth portion, BellSouth will charge BLC Management for any dispatching and testing (both inside and outside the CO) required by BellSouth in order to confirm the working status. The rates charged for no trouble found (NTF) shall be as set forth in Exhibit A of this Attachment.

3.1.11 Only one CLEC shall be permitted access to the High Frequency Spectrum of any particular Loop.

3.2 **Provisioning of Line Sharing and Splitter Space**

3.2.1 BellSouth will provide BLC Management with access to the High Frequency Spectrum as follows:

3.2.1.1 To order High Frequency Spectrum on a particular Loop, BLC Management must have a Digital Subscriber Line Access Multiplexer (DSLAM) collocated in the central office that serves the End User of such Loop.

3.2.1.2 BLC Management may provide its own splitters or may order splitters in a central office once it has installed its DSLAM in that central office. BellSouth will install splitters within thirty-six (36) calendar days of BLC Management's submission of an error free Line Splitter Ordering Document (LSOD) to the BellSouth Complex Resale Support Group.

3.2.1.3 Once a splitter is installed on behalf of BLC Management in a central office in which BLC Management is located, BLC Management shall be entitled to order the High Frequency Spectrum on lines served out of that central office. BellSouth will bill and BLC Management shall pay the electronic or manual ordering charges as applicable when BLC Management orders High Frequency Spectrum for End User service.

3.2.1.4 BellSouth shall test the data portion of the Loop to ensure the continuity of the wiring for BLC Management's data.

3.3 **BellSouth Provided Splitter – Line Sharing**

3.3.1 BellSouth will select, purchase, install, and maintain a central office POTS splitter and provide BLC Management access to data ports on the splitter. The splitter will route the High Frequency Spectrum on the circuit to BLC Management's xDSL equipment in BLC Management's collocation space. At least thirty (30) calendar days before making a change in splitter suppliers, BellSouth will provide BLC Management with a carrier notification letter, informing BLC Management of change. BLC Management shall purchase ports on the splitter in increments of eight (8), twenty-four (24), or ninety-six (96) ports in Alabama, Florida, Georgia, Kentucky, Louisiana, Mississippi, North Carolina and South Carolina. BLC Management shall purchase ports on the splitter in increments of twenty-four (24) or ninety-six (96) ports in Tennessee.

3.3.2 BellSouth will install the splitter in (i) a common area close to BLC Management's collocation area, if possible; or (ii) in a BellSouth relay rack as close to BLC Management's DS0 termination point as possible. BLC Management shall have access to the splitter for test purposes, regardless of where the splitter is placed in the BellSouth premises. For purposes of this section, a common area is defined as an area in the central office in which both Parties have access to a common test access point. A Termination Point is defined as the point of termination for BLC Management on the main distributing frame in the central office and is not the demarcation point set forth in Attachment 4 of this Agreement. BellSouth will cross-connect the splitter data ports to a specified BLC Management DS0 at such time that a BLC Management End User's service is established.

3.4 **CLEC Provided Splitter – Line Sharing**

3.4.1 BLC Management may at its option purchase, install and maintain central office POTS splitters in its collocation arrangements. BLC Management may use such splitters for access to its customers and to provide digital line subscriber services to its customers using the High Frequency Spectrum. Existing Collocation rules and procedures and the terms and conditions relating to Collocation set forth in Attachment 4-Central Office shall apply.

3.4.2 Any splitters installed by BLC Management in its collocation arrangement shall comply with ANSI T1.413, Annex E, or any future ANSI splitter Standards. BLC Management may install any splitters that BellSouth deploys or permits to be deployed for itself or any BellSouth affiliate.

3.5 **Ordering – Line Sharing**

3.5.1 BLC Management shall use BellSouth's LSOD to order splitters from BellSouth and to activate and deactivate DS0 Collocation Connecting Facility Assignments (CFA) for use with High Frequency Spectrum.

3.5.2 BellSouth will provide BLC Management the LSR format to be used when ordering the High Frequency Spectrum.

3.5.3 BellSouth will provision High Frequency Spectrum in compliance with BellSouth's Products and Services Interval Guide available at the website at http://www.interconnection.bellsouth.com.

3.5.4 BellSouth will provide BLC Management access to Preordering LMU in accordance with the terms of this Agreement. BellSouth shall bill and BLC Management shall pay the rates for such services, as described in Exhibit A.

3.6 **Maintenance and Repair – Line Sharing**

3.6.1 BLC Management shall have access for repair and maintenance purposes to any Loop for which it has access to the High Frequency Spectrum. If BLC Management is using a BellSouth owned splitter, BLC Management may access the Loop at the point where the combined voice and data signal exits the central office splitter via a bantam test jack. If BLC Management provides its own splitter, it may test from the collocation space or the Termination Point.

3.6.2 BellSouth will be responsible for repairing voice services and the physical line between the NID at the customer's premises and the Termination Point. BLC Management will be responsible for repairing data services. Each Party will be responsible for maintaining its own equipment.

3.6.3 BLC Management shall inform its End Users to direct data problems to BLC Management, unless both voice and data services are impaired, in which event the End Users should call BellSouth.

3.6.4 Once a Party has isolated a trouble to the other Party's portion of the Loop, the Party isolating the trouble shall notify the End User that the trouble is on the other Party's portion of the Loop.

3.6.5 Notwithstanding anything else to the contrary in this Agreement, when BellSouth receives a voice trouble and isolates the trouble to the physical collocation arrangement belonging to BLC Management, BellSouth will notify BLC Management. BLC Management will provide at least one but no more than two (2) verbal CFA pair changes to BellSouth in an attempt to resolve the voice trouble. In the event a CFA pair change resolves the voice trouble, BLC Management will provide BellSouth an LSR with the new CFA pair information within twenty-four (24) hours. If the owner of the collocation space fails to resolve the trouble by providing BellSouth with the verbal CFA pair changes, BellSouth may discontinue BLC Management's access to the High Frequency Spectrum on such Loop. BellSouth will not be responsible for any loss of data as a result of this action.

3.7 **Line Splitting**

3.7.1 Line splitting allows a provider of data services (a Data LEC) and a provider of voice services (a Voice CLEC) to deliver voice and data service to End Users over the same Loop. The Voice CLEC and Data LEC may be the same or different carriers.

3.7.2 In the event BLC Management provides its own switching or obtains switching from a third party, BLC Management may engage in line splitting arrangements with another CLEC using a splitter, provided by BLC Management, in a Collocation Arrangement at the central office where the loop terminates into a distribution frame or its equivalent.

3.7.3 Where BLC Management is purchasing a UNE-port and a UNE-loop, BellSouth shall offer line splitting pursuant to the following sections in this Attachment.

3.7.4 BLC Management shall provide BellSouth with a signed LOA between it and the Data LEC or Voice CLEC with which it desires to provision Line Splitting services, if BLC Management will not provide voice and data services.

3.7.5 End Users currently receiving voice service from a Voice CLEC through a UNE-P may be converted to Line Splitting arrangements by BLC Management or its authorized agent ordering Line Splitting Service. If the CLEC wishes to provide the splitter, the UNE-P arrangement will be converted to a stand-alone UNE Loop, a UNE port, two collocation cross connects and the high frequency spectrum line activation. If BellSouth owns the splitter, the UNE-P arrangement will be converted to a stand-alone UNE Loop, port, and one collocation cross connection.

3.7.6 When End Users on Loops using High Frequency Spectrum CO Based line sharing service are converted to Line Splitting, BellSouth will discontinue billing BLC Management for the High Frequency Spectrum. BellSouth will continue to bill the Data LEC for all associated splitter charges if the Data LEC continues to use a BellSouth splitter. It is the responsibility of BLC Management or its authorized agent to determine if the Loop is compatible for Line Splitting Service. BLC Management or its authorized agent may use the existing Loop unless it is not compatible with the Data LEC's data service and BLC Management or its authorized agent submits an LSR to BellSouth to change the Loop.

3.8 **Provisioning Line Splitting and Splitter Space**

3.8.1 The Data LEC, Voice CLEC or BellSouth may provide the splitter. When BLC Management or its authorized agent owns the splitter, Line Splitting requires the following: a non-designed analog Loop from the serving wire center to the NID at the End User's location; a collocation cross connection connecting the Loop to the collocation space; a second collocation cross connection from the collocation space connected to a voice port; the high frequency spectrum line activation, and a splitter. The Loop and port cannot be a Loop and port combination (i.e. UNE-P),

but must be individual stand-alone Network Elements. When BellSouth owns the splitter, Line Splitting requires the following: a non designed analog Loop from the serving wire center to the NID at the End User's location with CFA and splitter port assignments, and a collocation cross connection from the collocation space connected to a voice port.

3.8.2 An unloaded 2-wire copper Loop must serve the End User. The meet point for the Voice CLEC and the Data LEC is the point of termination on the MDF for the Data LEC's cable and pairs.

3.8.3 The foregoing procedures are applicable to migration to Line Splitting Service from a UNE-P arrangement, BellSouth Retail Voice Service, BellSouth High Frequency Spectrum (CO Based) Line Sharing.

3.8.4 For other migration scenarios to line splitting, BellSouth will work cooperatively with CLECs to develop methods and procedures to develop a process whereby a Voice CLEC and a Data LEC may provide services over the same Loop.

3.9 Ordering – Line Splitting

3.9.1 BLC Management shall use BellSouth's LSOD to order splitters from BellSouth and to activate and deactivate DS0 Collocation CFA for use with Line Splitting.

3.9.2 BellSouth shall provide BLC Management the LSR format to be used when ordering Line Splitting service.

3.9.3 BellSouth will provision Line Splitting service in compliance with BellSouth's Products and Services Interval Guide available at the website at http://www.interconnection.bellsouth.com.

3.9.4 BellSouth will provide BLC Management access to Preordering LMU in accordance with the terms of this Agreement. BellSouth shall bill and BLC Management shall pay the rates for such services as described in Exhibit A.

3.9.5 BellSouth will provide Loop modification to BLC Management on an existing Loop in accordance with procedures developed in the Line Sharing Collaborative. High Frequency Spectrum (CO Based) Unbundled Loop Modification is a separate distinct service from Unbundled Loop Modification set forth in Section 2.5 of this Attachment. Procedures for High Frequency Spectrum (CO Based) Unbundled Loop Modification may be found on the web at: http://www.interconnection.bellsouth.com/html/unes.html. Nonrecurring rates for this offering are as set forth in Exhibit A of this Attachment.

3.10 Maintenance – Line Splitting

3.10.1 BellSouth will be responsible for repairing voice services and the physical loop between the NID at the customer's premises and the termination point. BLC Management will be responsible for maintaining the voice and data services. Each Party will be responsible for maintaining its own equipment.

3.10.2 BLC Management shall inform its End Users to direct all problems to BLC Management or its authorized agent.

3.10.3 If BLC Management is not the data provider, BLC Management shall indemnify, defend and hold harmless BellSouth from and against any claims, losses, actions, causes of action, suits, demands, damages, injury, and costs including reasonable attorney fees, which arise out of actions related to the data provider.

4 Local Switching

4.1 BellSouth shall provide non-discriminatory access to local circuit switching capability and local tandem switching capability on an unbundled basis, except as set forth in the Sections below to BLC Management for the provision of a telecommunications service.

4.2 **Local Circuit Switching Capability, including Tandem Switching Capability**

4.2.1 Local circuit switching capability is defined as all line-side and trunk-side facilities, plus the features, functions, and capabilities of the switch. The features, functions, and capabilities of the switch shall include the basic switching function of connecting lines to lines, lines to trunks, trunks to lines, and trunks to trunks. Local circuit switching includes all vertical features that the switch is capable of providing, including custom calling, custom local area signalling service features, and Centrex, as well as any technically feasible customized routing functions.

4.2.2 Notwithstanding BellSouth's general duty to unbundle local circuit switching, BellSouth shall not be required to unbundle local circuit switching for BLC Management when BLC Management: (1) serves an End User with four (4) or more voice-grade (DS0) equivalents or lines served by BellSouth in Zone 1 of one of the following MSAs: Atlanta, GA; Miami, FL; Orlando, FL; Ft. Lauderdale, FL; Charlotte-Gastonia-Rock Hill, NC; Greensboro-Winston Salem-High Point, NC; Nashville, TN; and New Orleans, LA; or (2) serves an End User with a DS1 or higher capacity Loop in any service area covered by this Agreement. To the extent that BLC Management is serving any End User as described in (2) above as of October 2, 2003, such arrangement may not remain in place any longer than April 1, 2004, after which such arrangement must be terminated by BLC Management or BellSouth shall convert such arrangement to tariff pricing. The filing of this Agreement with the applicable Commission shall constitute the filing of the joint transition plan specified by the FCC.

4.2.3 Rates for unbundled switching at the DS1 level and above or for combinations with unbundled switching at the DS1 level and above provisioned prior to the Effective Date of this Agreement shall be those rates set forth in Exhibit A of this Attachment until April 1, 2004.

4.2.4 Local Switching that is not required to be provided as a UNE will be provided pursuant to a separate agreement or a tariff, at BellSouth's discretion.

4.2.5 Unbundled Local Switching consists of three separate unbundled elements: Unbundled Ports, End Office Switching Functionality, and End Office Interoffice Trunk Ports.

4.2.6 Unbundled Local Switching combined with Common Transport and, if necessary, Tandem Switching provides to BLC Management's End User local calling and the ability to presubscribe to a primary carrier for intraLATA and/or to presubscribe to a primary carrier for interLATA toll service.

4.2.7 Provided that BLC Management purchases unbundled local switching from BellSouth and uses the BellSouth Carrier Identification Code (CIC) for its End Users' Local Preferred Interexchange Carrier (LPIC) or if a BellSouth local End User selects BellSouth as its LPIC, then the Parties will consider as local any calls originated by a BLC Management local End User, or originated by a BellSouth local End User and terminated to a BLC Management local End User, where such calls originate and terminate in the same LATA, except for those calls originated and terminated through switched access arrangements (i.e., calls that are transported by a Party other than BellSouth). For such calls, BellSouth will charge BLC Management the UNE elements for the BellSouth facilities utilized. Neither Party shall bill the other originating or terminating switched access charges for such calls. Intercarrier compensation for local calls between BellSouth and BLC Management shall be as described in BellSouth's UNE Local Call Flows set forth on BellSouth's website.

4.2.8 Where BLC Management purchases unbundled local switching from BellSouth but does not use the BellSouth CIC for its End Users' LPIC, BellSouth will consider as local those direct dialed telephone calls that originate from a BLC Management End User and terminate within the basic local calling area or within the extended local calling areas and that are dialed using seven (7) or ten (10) digits as defined and specified in Section A3 of BellSouth's General Subscriber Services Tariffs (GSST). For such local calls, BellSouth will charge BLC Management the UNE elements for the BellSouth facilities utilized. Intercarrier compensation for local calls between BellSouth and BLC Management shall be as described in BellSouth's UNE Local Call Flows set forth on BellSouth's website.

4.2.9 For any calls that originate and terminate through switched access arrangements (i.e., calls that are transported by a party other than BellSouth), BellSouth shall bill BLC Management the UNE elements for the BellSouth facilities utilized. Each

Party may bill the toll provider originating or terminating switched access charges as appropriate.

4.2.10 **Unbundled Port Features**

4.2.10.1 Charges for Unbundled Port are as set forth in Exhibit A, and as specified in such exhibit, may or may not include individual features.

4.2.10.2 Where applicable and available, non-switch-based services may be ordered with the Unbundled Port at BellSouth's retail rates.

4.2.10.3 Any features that are not currently available but are technically feasible through the switch can be requested through the BFR/NBR process.

4.2.10.4 BellSouth will provide to BLC Management selective routing of calls to a requested Operator System platform pursuant to this Attachment. Any other routing requests by BLC Management will be made pursuant to the BFR/NBR Process as set forth in Attachment 11**.**

4.2.11 **Remote Call Forwarding**

4.2.11.1 As an option, BellSouth shall make available to BLC Management an unbundled port with Remote Call Forwarding capability (URCF service). URCF service combines the functionality of unbundled local switching, tandem switching and common transport to forward calls from the URCF service telephone number (the number dialed by the calling party) to another telephone number selected by the URCF service subscriber. When ordering URCF service, BLC Management will ensure that the following conditions are satisfied:

4.2.11.1.1 That the End User of the forward-to number (service) agrees to receive calls forwarded using the URCF service (if such End User is different from the URCF service End User);

4.2.11.1.2 That the forward-to number (service) is equipped with sufficient capacity to receive the volume of calls that will be generated from the URCF service;

4.2.11.1.3 That the URCF service will not be utilized to forward calls to another URCF or similar service; and

4.2.11.1.4 That the forward-to number (service) is not a public safety number (e.g. 911, fire or police number).

4.2.11.2 In addition to the charge for the URCF service port, BellSouth shall charge BLC Management the rates set forth in Exhibit A for unbundled local switching, tandem switching, and common transport, including all associated usage incurred for calls from the URCF service telephone number (the number dialed by the calling party) to the forward-to number (service).

4.2.12 **Provision for Local Switching**

4.2.12.1 BellSouth shall perform routine testing (e.g., Mechanized Loop Tests (MLT) and test calls such as 105, 107 and 108 type calls) and fault isolation on a mutually agreed upon schedule.

4.2.12.2 BellSouth shall control congestion points such as those caused by radio station call-ins and network routing abnormalities. All traffic shall be restricted in a non-discriminatory manner.

4.2.12.3 BellSouth shall perform manual call trace and permit customer originated call trace. BellSouth shall provide Switching Service Point (SSP) capabilities and signaling software to interconnect the signaling links destined to the Signaling Transfer Point Switch (STPS). These capabilities shall adhere to the technical specifications set forth in the applicable industry standard technical references.

4.2.12.4 BellSouth shall provide interfaces to adjuncts through Telcordia standard interfaces. These adjuncts can include, but are not limited to, the Service Circuit Node and Automatic Call Distributors. BellSouth shall offer to BLC Management all Advanced Intelligent Network (AIN) triggers in connection with its SMS/SCE offering.

4.2.12.5 BellSouth shall provide access to SS7 Signaling Network or Multi-Frequency trunking if requested by BLC Management.

4.2.13 **Local Switching Interfaces**.

4.2.13.1 BLC Management shall order ports and associated interfaces compatible with the services it wishes to provide as listed in Exhibit A. BellSouth shall provide the following local switching interfaces:

4.2.13.1.1 Standard Tip/Ring interface including loopstart or groundstart, on-hook signaling (e.g., for calling number, calling name and message waiting lamp);

4.2.13.1.2 Coin phone signaling;

4.2.13.1.3 Basic Rate Interface ISDN adhering to appropriate Telcordia Technical Requirements;

4.2.13.1.4 Two-wire analog interface to PBX;

4.2.13.1.5 Four-wire analog interface to PBX;

4.2.13.1.6 Four-wire DS1 interface to PBX or customer provided equipment (e.g. computers and voice response systems);

4.2.13.1.7 Primary Rate ISDN to PBX adhering to ANSI standards Q.931, Q.932 and appropriate Telcordia Technical Requirements;

4.2.13.1.8 Switched Fractional DS1 with capabilities to configure Nx64 channels (where N = 1 to 24); and

4.2.13.1.9 Loops adhering to Telcordia TR-NWT-08 and TR-NWT-303 specifications to interconnect Digital Loop Carriers.

4.2.14 All End Users of BLC Management who have service provisioned via 4-Wire ISDN DS1 Port with E911 Locator Capability shall physically be located in the E911 Tandem Switch service area.

4.2.15 BLC Management shall pass its End User's telephone number to BellSouth over the Primary Interface (PRI) trunk group via ANI or via direct Centralized Automated Message Accounting (CAMA) trunks to the appropriate E911 tandem switch.

4.2.16 BLC Management shall maintain the individual telephone number and the correct corresponding address/location data, including maintaining the End User listed address as the actual physical End User location in the E911 Automatic Location Identification (ALI) Database.

4.2.17 BLC Management will be responsible and liable for any errors resulting from the submission of invalid telephone number and address/location data for the CLEC's End Users.

4.3 **Tandem Switching**

4.3.1 The Tandem Switching capability Network Element is defined as: (i) trunk-connect facilities, which include, but are not limited to, the connection between trunk termination at a cross connect panel and switch trunk card; (ii) the basic switch trunk function of connecting trunks to trunks; and (iii) the functions that are centralized in the Tandem Switches (as distinguished from separate end office switches), including but not limited to call recording, the routing of calls to operator services and signaling conversion features.

4.3.1.1 Where BLC Management utilizes portions of the BellSouth network in originating or terminating traffic, the Tandem Switching rates are applied in call scenarios where the Tandem Switching Network Element has been utilized. Because switch recordings cannot accurately indicate on a per call basis when the Tandem Switching Network Element has been utilized for an interoffice call originating from a UNE port and terminating to a BellSouth, Independent Company or Facility-Based CLEC office, BellSouth has developed, based upon call studies, a melded rate that takes into account the average percentage of calls that utilize Tandem Switching in these scenarios. BellSouth shall apply the melded Tandem

Switching rate for every call in these scenarios. BellSouth shall utilize the melded Tandem Switching Rate until BellSouth has the capability to measure actual Tandem Switch usage in each call scenario specifically mentioned above, at which point the rate for the actual Tandem Switch usage shall apply. The UNE Call Flows set forth on BellSouth's website, as amended from time to time and incorporated herein by this reference, illustrate when the full or melded Tandem Switching rates apply for specific scenarios.

4.3.2 Technical Requirements

4.3.2.1 Tandem Switching shall have the same capabilities or equivalent capabilities as those described in Telcordia TR-TSY-000540 Issue 2R2, Tandem Supplement, June 1, 1990. The requirements for Tandem Switching include but are not limited to the following:

4.3.2.1.1 Tandem Switching shall provide signaling to establish a tandem connection;

4.3.2.1.2 Tandem Switching will provide screening as jointly agreed to by BLC Management and BellSouth;

4.3.2.1.3 Where applicable, Tandem Switching shall provide AIN triggers supporting AIN features where such routing is not available from the originating end office switch, to the extent such Tandem switch has such capability;

4.3.2.1.4 Where applicable, Tandem Switching shall provide access to Toll Free number database;

4.3.2.1.5 Tandem Switching shall provide connectivity to Public Safety Answering Point (PSAP)s where 911 solutions are deployed and the tandem is used for 911; and

4.3.2.1.6 Where appropriate, Tandem Switching shall provide connectivity for the purpose of routing transit traffic to and from other carriers.

4.3.2.2 BellSouth may perform testing and fault isolation on the underlying switch that is providing Tandem Switching. Such testing shall be testing routinely performed by BellSouth. The results and reports of the testing shall be made available to BLC Management.

4.3.2.3 BellSouth shall control congestion points and network abnormalities. All traffic will be restricted in a non-discriminatory manner.

4.3.2.4 Tandem Switching shall process originating toll free traffic received from BLC Management’s local switch.

4.3.2.5 In support of AIN triggers and features, Tandem Switching shall provide SSP capabilities when these capabilities are not available from the Local Switching Network Element to the extent such Tandem Switch has such capability.

4.3.3 Upon BLC Management's purchase of overflow trunk groups, Tandem Switching shall provide an alternate routing pattern for BLC Management's traffic overflowing from direct end office high usage trunk groups.

4.4 **AIN Selective Carrier Routing for Operator Services, Directory Assistance and Repair Centers**

4.4.1 Where BellSouth provides local switching to BLC Management, BellSouth will provide AIN Selective Carrier Routing (AIN SCR) at the request of BLC Management. AIN SCR will provide BLC Management with the capability of routing operator calls, 0+ and 0- and 0+ NPA Local Numbering Plan Area (LNPA), 555-1212 directory assistance, 1+411 directory assistance and 611 repair center calls to pre-selected destinations.

4.4.2 BLC Management shall order AIN SCR through its Account Team and/or Local Contract Manager. AIN SCR must first be established regionally and then on a per central office per state basis.

4.4.3 AIN SCR is not available in DMS 10 switches.

4.4.4 Where AIN SCR is utilized by BLC Management, the routing of BLC Management's End User calls shall be pursuant to information provided by BLC Management and stored in BellSouth's AIN SCR Service Control Point database. AIN SCR shall utilize a set of Line Class Codes (LCCs) unique to a basic class of service assigned on an "as needed" basis. The same LCCs will be assigned in each central office where AIN SCR is established.

4.4.5 Upon ordering AIN SCR Regional Service, BLC Management shall remit to BellSouth the Regional Service Order nonrecurring charges set forth in Exhibit A of this Attachment. There shall be a nonrecurring End Office Establishment Charge per office due at the addition of each central office where AIN SCR will be utilized. Said nonrecurring charge shall be as set forth in Exhibit A of this Attachment. For each BLC Management End User activated, there shall be a nonrecurring End User Establishment charge as set forth in Exhibit A of this Attachment. BLC Management shall pay the AIN SCR Per Query Charge set forth in Exhibit A of this Attachment.

4.4.6 This Regional Service Order nonrecurring charge will be non-refundable and will be paid with one half due up-front with the submission of all fully completed required forms including: Regional Selective Carrier Routing (SCR) Order Request-Form A, Central Office AIN SCRSCR Order Request - Form B, AIN SCR Central Office Identification Form - Form C, AIN SCR Routing Options Selection Form - Form D, and Routing Combinations Table - Form E. BellSouth has thirty (30) calendar days to respond to BLC Management's fully completed firm order as a Regional Service Order. With the delivery of this firm order response to BLC Management, BellSouth considers that the delivery schedule of

this service commences. The remaining half of the Regional Service Order payment must be paid when at least ninety (90) percent of the Central Offices listed on the original order have been turned up for the service.

4.4.7 The nonrecurring End Office Establishment Charge will be billed to BLC Management following BellSouth's normal monthly billing cycle for this type of order.

4.4.8 End-User Establishment Orders will not be turned-up until the second payment is received for the Regional Service Order. The nonrecurring End-User Establishment Charges will be billed to BLC Management following BellSouth's normal monthly billing cycle for this type of order.

4.4.9 Additionally, the AIN SCR Per Query Charge will be billed to BLC Management following the normal billing cycle for per query charges.

4.4.10 All other network components needed, for example, unbundled switching, unbundled local transport, etc., will be billed per contracted rates.

4.5 <u>Selective Call Routing Using Line Class Codes (SCR-LCC)</u>

4.5.1 Where BLC Management purchases unbundled local switching from BellSouth and utilizes an operator services provider other than BellSouth, BellSouth will route BLC Management's End User calls to that provider through Selective Call Routing.

4.5.2 Selective Call Routing using Line Class Codes (SCR-LCC) provides the capability for BLC Management to have its Operator Call Processing/Directory Assistance (OCP/DA) calls routed to BellSouth's OCP/DA platform for BellSouth provided Custom Branded or Unbranded OCP/DA or to its own or an alternate OCP/DA platform for Self-Branded OCP/DA. SCR-LCC is only available if line class code capacity is available in the requested BellSouth end office switches.

4.5.3 Custom Branding for Directory Assistance (DA) is not available for certain classes of service, including but not limited to Hotel/Motel services, WATS service, and certain PBX services.

4.5.4 Where available, BLC Management specific and unique LCCs are programmed in each BellSouth end office switch where BLC Management intends to serve End Users with customized OCP/DA branding. The LCCs specifically identify BLC Management's End Users so OCP/DA calls can be routed over the appropriate trunk group to the requested OCP/DA platform. Additional LCCs are required in each end office if the end office serves multiple NPAs (i.e., a unique LCC is required per NPA), and/or if the end office switch serves multiple rate areas and BLC Management intends to provide BLC Management -branded OCP/DA to its End Users in these multiple rate areas.

4.5.5 SCR-LCC supporting Custom Branding and Self Branding require BLC Management to order dedicated trunking from each BellSouth end office identified by BLC Management, either to the BellSouth Traffic Operator Position System (TOPS) for Custom Branding or to the BLC Management Operator Service Provider for Self Branding. Separate trunk groups are required for Operator Services and for DA. Rates for trunks are set forth in applicable BellSouth tariffs.

4.5.6 Unbranding - Unbranded DA and/or OCP calls ride common trunk groups provisioned by BellSouth from those end offices identified by BLC Management to the BellSouth TOPS.

4.5.7 The Rates for SCR-LCC are as set forth in this Attachment. There is a nonrecurring charge for the establishment of each LCC in each BellSouth central office. Furthermore, for Unbranded and Custom Branded OCP/DA provided by BellSouth Operator Services with unbundled ports and unbundled port/loop switch combinations, monthly recurring usage charges shall apply for the UNEs necessary to provide the service, such as end office and tandem switching and common transport. A flat rated end office switching charge shall apply to Self-Branded OCP/DA when used in conjunction with unbundled ports and unbundled port/loop switch combinations.

5 Unbundled Network Element Combinations

5.1 For purposes of this Section, references to "Currently Combined" Network Elements shall mean that the particular Network Elements requested by BLC Management are in fact already combined by BellSouth in the BellSouth network. References to "Ordinarily Combined" Network Elements shall mean that the particular Network Elements requested by BLC Management are not already combined by BellSouth in the location requested by BLC Management but are elements that are typically combined in BellSouth's network. References to "Not Typically Combined" Network Elements shall mean that the particular Network Elements requested by BLC Management are not elements that BellSouth combines for its use in its network.

5.1.1 Upon request, BellSouth shall perform the functions necessary to combine unbundled Network Elements in any manner, even if those elements are not ordinarily combined in BellSouth's network, provided that such combination is technically feasible and will not undermine the ability of other carriers to obtain access to unbundled Network Elements or to interconnect with BellSouth's network.

5.2 Enhanced Extended Links (EELs)

5.2.1 EELs are combinations of unbundled Loops and unbundled dedicated transport as defined in this Attachment, together with any facilities, equipment, or functions necessary to combine those Network Elements. BellSouth shall provide BLC

Management with EELs where the underlying UNEs are available and in all instances where the requesting carrier meets the eligibility requirements, if applicable.

5.2.2 High-capacity EELs are combinations of loop and transport UNEs or commingled loop and transport facilities at the DS1 and/or DS3 level as described in 47 CFR 51.318(b). High-capacity EELs must comply with the service eligibility requirements set forth in 5.2.4 below.

5.2.3 By placing an order for a high-capacity EEL, BLC Management thereby certifies that the service eligibility criteria set forth herein are met for access to a converted high-capacity EEL, a new high-capacity EEL, or part of a high-capacity commingled EEL as a UNE. BellSouth shall have the right to audit BLC Management's high-capacity EELs as specified below.

5.2.4 If a high-capacity EEL or Ordinarily Combined Network Element is not readily available but can be made available through routine network modifications, as defined by the FCC, BLC Management may request BellSouth to perform such routine network modifications. The request may not be used to place fiber. Each request will be handled as a project on an individual case basis. BellSouth will provide a price quote for the request, and upon receipt of payment by BLC Management, BellSouth shall perform the routine network modifications.

5.2.5 <u>Service Eligibility Criteria</u>

5.2.5.1 BLC Management must certify for each high-capacity EEL that all of the following service eligibility criteria are met:

5.2.5.1.1 BLC Management has received state certification to provide local voice service in the area being served;

5.2.5.2 For each combined circuit, including each DS1 circuit, each DS1 EEL, and each DS1-equivalent circuit on a DS3 EEL:

5.2.5.2.1 1) Each circuit to be provided to each End User will be assigned a local number prior to the provision of service over that circuit;

5.2.5.2.2 2) Each DS1-equivalent circuit on a DS3 EEL must have its own local number assignment so that each DS3 must have at least twenty-eight (28) local voice numbers assigned to it;

5.2.5.2.3 3) Each circuit to be provided to each End User will have 911 or E911 capability prior to provision of service over that circuit;

5.2.5.2.4 4) Each circuit to be provided to each End User will terminate in a collocation arrangement that meets the requirements of 47 CFR 51.318(c);

5.2.5.2.5 5) Each circuit to be provided to each End User will be served by an interconnection trunk over which BLC Management will transmit the calling party's number in connection with calls exchanged over the trunk;

5.2.5.2.6 6) For each twenty-four (24) DS1 EELs or other facilities having equivalent capacity, BLC Management will have at least one (1) active DS1 local service interconnection trunk over which BLC Management will transmit the calling party's number in connection with calls exchanged over the trunk;

5.2.5.2.7 7) Each circuit to be provided to each End User will be served by a switch capable of switching local voice traffic.

5.2.6 BellSouth may, on an annual basis, audit BLC Management's records in order to verify compliance with the qualifying service eligibility criteria. The audit shall be conducted by a third party independent auditor, and the audit must be performed in accordance with the standards established by the American Institute for Certified Public Accountants (AICPA). To the extent the independent auditor's report concludes that BLC Management failed to comply with the service eligibility criteria, BLC Management must true-up any difference in payments, convert all noncompliant circuits to the appropriate service, and make the correct payments on a going-forward basis. In the event the auditor's report concludes that , BLC Management did not comply in any material respect with the service eligibility criteria, BLC Management shall reimburse BellSouth for the cost of the independent auditor. To the extent the auditor's report concludes that BLC Management did comply in all material respects with the service eligibility criteria, BellSouth will reimburse BLC Management for its reasonable and demonstrable costs associated with the audit. BLC Management will maintain appropriate documentation to support its certifications.

5.2.7 In the event BLC Management converts special access services to UNEs, BLC Management shall be subject to the termination liability provisions in the applicable special access tariffs, if any.

5.3 <u>UNE Port/Loop Combinations</u>

5.3.1 Combinations of port and loop unbundled Network Elements along with switching and transport unbundled Network Elements provide local exchange service for the origination or termination of calls. Port/loop combinations support the same local calling and feature requirements as described in the Unbundled Local Switching or Port section of this Attachment and the ability to presubscribe to a primary carrier for intraLATA toll service and/or to presubscribe to a primary carrier for interLATA toll service.

5.3.2 BellSouth is not required to provide combinations of port and loop Network Elements on an unbundled basis in locations where, pursuant to FCC and

Commission rules, BellSouth is not required to provide local circuit switching as an unbundled Network Element.

5.3.3 BellSouth shall not be required to provide local circuit switching as a UNE in density Zone 1, as defined in 47 CFR 69.123 as of January 1, 1999 of the Atlanta, GA; Miami, FL; Orlando, FL; Ft. Lauderdale, FL; Charlotte-Gastonia-Rock Hill, NC; Greensboro-Winston Salem-High Point, NC; Nashville, TN; and New Orleans, LA, MSAs to BLC Management if BLC Management's customer has four (4) or more DS0 equivalent lines.

5.3.4 BellSouth shall not be required to provide local circuit switching as a UNE or combination of UNEs if the End User is being served by a BellSouth DS1 or higher capacity Loop in any service area covered by this Agreement. To the extent that BLC Management is serving any End User as described above as of October 2, 2003, such arrangement may not remain in place any longer than April 1, 2004, after which such arrangement must be terminated by BLC Management or BellSouth shall convert such arrangement to tariff pricing. The filing of this Agreement with the applicable Commission shall constitute the filing of the joint transition plan specified by the FCC.

5.3.5 BellSouth shall make 911 updates in the BellSouth 911 database for BLC Management's UNE port/Loop combinations. BellSouth will not bill BLC Management for 911 surcharges. BLC Management is responsible for paying all 911 surcharges to the applicable governmental agency.

5.4 <u>Rates</u>

5.4.1 The rates for the Currently Combined Network Elements specifically set forth in Exhibit A of this Attachment shall be the rates associated with such combinations. Where a Currently Combined combination is not specifically set forth in Exhibit A, the rate for such Currently Combined combination of Network Elements shall be the sum of the recurring rates for those individual Network Elements in addition to the applicable non-recurring switch-as-is charge set forth in Exhibit A.

5.4.2 The rates for the Ordinarily Combined Network Elements specifically set forth in Exhibit A of this Attachment shall be the non-recurring and recurring charges for those combinations. Where an Ordinarily Combined combination is not specifically set forth in Exhibit A, the rate for such Ordinarily Combined combination of Network Elements shall be the sum of the recurring and non-recurring rates for those individual Network Elements as set forth in Exhibit A.

5.4.3 Except as set forth in this Section 5, BellSouth shall provide UNE port/loop combinations specifically set forth in Exhibit A that are Currently Combined or Ordinarily Combined in BellSouth's network at the cost-based rates in Exhibit A.

5.4.4 BellSouth shall provide other Currently Combined and Ordinarily Combined and Not Typically Combined UNE Combinations to BLC Management in addition to those specifically referenced in this Section 5 above, where available. To the extent BLC Management requests a combination for which BellSouth does not have rates and methods and procedures in place to provide such combination, rates and/or methods and procedures for such combination will be developed pursuant to the BFR/NBR process.

6 Transport, Channelization and Dark Fiber

6.1 Transport

6.1.1 BellSouth shall provide nondiscriminatory access, in accordance with FCC Rules 51.311, 51.319, and Section 251(c)(3) of the Act to interoffice transmission facilities described in this Section 6 on an unbundled basis to BLC Management for the provision of a qualifying service, as set forth herein.

6.1.1.1 Dedicated Transport is defined as BellSouth's interoffice transmission facilities, dedicated to a particular customer or carrier that BLC Management uses for transmission between wire centers or switches owned by BellSouth and within the same LATA.

6.1.1.2 Dark Fiber Transport, defined as BellSouth's optical transmission facilities without attached signal regeneration, multiplexing, aggregation or other electronics, between wire centers or switches owned by BellSouth and within the same LATA;

6.1.1.3 Common (Shared) Transport, defined as transmission facilities shared by more than one carrier, including BellSouth, between end office switches, between end office switches and tandem switches, and between tandem switches, in BellSouth's network. Where BellSouth Network Elements are connected by intraoffice wiring, such wiring is provided as part of the Network Element and is not Common (Shared) Transport.

6.1.1.3.1 Notwithstanding any other provision of this Agreement, BellSouth will only provide unbundled access to Common (Shared) Transport to the extent BellSouth is required to provide and is providing unbundled Local Circuit Switching to BLC Management.

6.1.2 BellSouth shall:

6.1.2.1 Provide BLC Management exclusive use of Dedicated Transport to a particular customer or carrier, or shared use of the features, functions, and capabilities of interoffice transmission facilities shared by more than one customer or carrier;

6.1.2.2 Provide all technically feasible features, functions, and capabilities of the transport facility;

6.1.2.3 Permit, to the extent technically feasible, BLC Management to connect such interoffice facilities to equipment designated by BLC Management, including but not limited to, BLC Management's collocated facilities; and

6.1.2.4 Permit, to the extent technically feasible, BLC Management to obtain the functionality provided by BellSouth's digital cross-connect systems.

6.1.3 Technical Requirements of Common (Shared) Transport

6.1.3.1 Common (Shared) Transport provided on DS1, DS3, and STS-1 circuits shall at a minimum meet the performance, availability, jitter, and delay requirements specified for Central Office to Central Office (CO to CO) connections in the applicable industry standards.

6.1.3.2 BellSouth shall be responsible for the engineering, provisioning, and maintenance of the underlying equipment and facilities that are used to provide Common (Shared) Transport.

6.1.3.3 At a minimum, Common (Shared) Transport shall meet all of the requirements set forth in the applicable industry standards.

6.2 **Dedicated Transport**

6.2.1 BellSouth shall offer Dedicated Transport in each of the following ways:

6.2.1.1 As capacity on a shared UNE facility.

6.2.1.2 As a circuit (e.g., DS0, DS1, DS3) dedicated to BLC Management.

6.2.2 Dedicated Transport may be provided over facilities such as optical fiber, copper twisted pair, and coaxial cable, and shall include transmission equipment such as line terminating equipment, amplifiers, and regenerators.

6.2.3 BLC Management may obtain a maximum of twelve (12) unbundled dedicated DS3 circuits, or their equivalent, for any single route at the UNE rates set forth in Exhibit A for which dedicated DS3 transport is available as unbundled transport. Additional capacity may be purchased pursuant to the rates, terms and conditions as set forth in the applicable tariff. A route is defined as a transmission path between one of BellSouth's wire centers or switches and another of BellSouth's wire centers or switches. A route between two (2) points may pass through one or more intermediate wire centers or switches. Transmission paths between identical end points are the same "route", irrespective of whether they pass through the same intermediate wire centers or switches, if any.

6.2.4 Any request to re-terminate one end of a circuit will require the issuance of new service and disconnection of the existing service and the applicable charges in

Exhibit A shall apply, and the re-terminated circuit shall be considered a new circuit as of the installation date.

6.2.5 If Dedicated Transport is not readily available but can be made available through routine network modifications, as defined by the FCC, BLC Management may request BellSouth to perform such routine network modifications. The request may not be used to place fiber. Each request will be handled as a project on an individual case basis. BellSouth will provide a price quote for the request, and upon receipt of payment by BLC Management, BellSouth shall perform the routine network modifications.

6.2.6 Technical Requirements

6.2.6.1 The entire designated transmission service (e.g., DS0, DS1, DS3) shall be dedicated to BLC Management designated traffic.

6.2.6.2 For DS1 or DS3 circuits, Dedicated Transport shall at a minimum meet the performance, availability, jitter, and delay requirements specified for Customer Interface to Central Office (CI to CO) connections in the applicable industry standards.

6.2.6.3 BellSouth shall offer the following interface transmission rates for Dedicated Transport:

6.2.6.3.1 DS0 Equivalent;

6.2.6.3.2 DS1;

6.2.6.3.3 DS3; and

6.2.6.3.4 SDH (Synchronous Digital Hierarchy) Standard interface rates are in accordance with International Telecommunications Union (ITU) Recommendation G.707 and Plesiochronous Digital Hierarchy (PDH) rates per ITU Recommendation G.704.

6.2.6.4 BellSouth shall design Dedicated Transport according to its network infrastructure. BLC Management shall specify the termination points for Dedicated Transport.

6.2.6.5 At a minimum, Dedicated Transport shall meet each of the requirements set forth in the applicable industry technical references.

6.2.6.6 BellSouth Technical References:

6.2.6.6.1 TR-TSY-000191 Alarm Indication Signals Requirements and Objectives, Issue 1, May 1986.

6.2.6.6.2 TR 73501 LightGate®Service Interface and Performance Specifications, Issue D, June 1995.

6.2.6.6.3 TR 73525 MegaLink®Service, MegaLink Channel Service and MegaLink Plus Service Interface and Performance Specifications, Issue C, May 1996.

6.3 Unbundled Channelization (Multiplexing)

6.3.1 Unbundled Channelization (UC) provides the optional multiplexing capability that will allow a DS1 (1.544 Mbps) or DS3 (44.736 Mbps) or STS-1 (51.84 Mbps) UNE or collocation cross connect to be multiplexed or channelized at a BellSouth central office. Channelization can be accomplished through the use of a multiplexer or a digital cross connect system at the discretion of BellSouth. Once UC has been installed, BLC Management may request channel activation on an as needed basis and BellSouth shall connect the requested facilities via Central Office Channel Interfaces (COCIs). The COCI must be compatible with the lower capacity facility and ordered with the lower capacity facility. This service is available as defined in NECA 4.

6.3.2 BellSouth shall make available the following channelization systems and interfaces:

6.3.2.1 DS1 Channelization System: channelizes a DS1 signal into a maximum of twenty-four (24) DS0s. The following Central Office Channel Interfaces (COCI) are available: Voice Grade, Digital Data and ISDN.

6.3.2.2 DS3 Channelization System: channelizes a DS3 signal into a maximum of twenty-eight (28) DS1s. A DS1 COCI is available with this system.

6.3.2.3 STS-1 Channelization System: channelizes a STS-1 signal into a maximum of twenty-eight (28) DS1s. A DS1 COCI is available with this system.

6.3.2.4 AMI and B8ZS line coding with either Super Frame (SF) and Extended Super Frame (ESF) framing formats will be supported as an optional feature on DS1 facilities.

6.3.3 Technical Requirements

6.3.3.1 In order to assure proper operation with BellSouth provided central office multiplexing functionality, BLC Management's channelization equipment must adhere strictly to form and protocol standards. BLC Management must also adhere to such applicable industry standards for the multiplex channel bank, for voice frequency encoding, for various signaling schemes, and for sub rate digital access.

6.3.3.2 TR 73501 LightGate®Service Interface and Performance Specifications, Issue D, June 1995

6.4 **Dark Fiber Transport**

6.4.1 Dark Fiber Transport is strands of optical fiber existing in aerial or underground structure. BellSouth will not provide line terminating elements, regeneration or other electronics necessary for BLC Management to utilize Dark Fiber Transport.

6.4.2 If Dark Fiber Transport is not readily available but can be made available through routine network modifications, as defined by the FCC, BLC Management may request BellSouth to perform such routine network modifications. The request may not be used to place fiber. Each request will be handled as a project on an individual case basis. BellSouth will provide a price quote for the request, and upon receipt of payment by BLC Management, BellSouth shall perform the routine network modifications.

6.4.3 Requirements

6.4.3.1 BellSouth shall make available Dark Fiber Transport where it exists in BellSouth's network and where, as a result of future building or deployment, it becomes available. Dark Fiber Transport will not be deemed available if (1) it is used by BellSouth for maintenance and repair purposes, (2) it is designated for use pursuant to a firm order placed by another customer, (3) it is restricted for use by all carriers, including BellSouth, because of transmission problems or because it is scheduled for removal due to documented changes to roads and infrastructure, or (4) BellSouth has plans to use the fiber within a two-year planning period. BellSouth is not required to place fibers for Dark Fiber Transport if there are none available.

6.4.3.2 BLC Management is solely responsible for testing the quality of the Dark Fiber Transport to determine its usability and performance specifications.

6.4.3.3 BellSouth shall use its best efforts to provide to BLC Management information regarding the location, availability and performance of Dark Fiber Transport within ten (10) business days after receiving a request from BLC Management. Within such time period, BellSouth shall send written confirmation of availability of the Dark Fiber Transport.

6.4.3.4 If the requested Dark Fiber Transport is available, BellSouth shall use its commercially reasonable efforts to provision the Dark Fiber Transport to BLC Management within twenty (20) business days after BLC Management submits a valid, error free LSR. Provisioning includes identification of appropriate connection points (e.g., LGX) to enable BLC Management to connect BLC Management provided transmission media (e.g., optical fiber) or equipment to the Dark Fiber Transport.

7 Databases

7.1 Call Related Databases are the databases set forth in this Attachment, other than OSS, that are used in signaling networks for billing and collection, or the

transmission, routing or other provision of a telecommunications service. Notwithstanding anything to the contrary herein, BellSouth shall only provide unbundled access to BellSouth Switched Access (SWA) 8XX Toll Free Dialing Ten Digit Screening Service, Line Information Database (LIDB), Signaling, Signaling Link Transport, Signaling Transfer Points, SS7 AIN Access, Service Control Point\Databases, Local Number Portability Databases, SS7 Network Interconnection, and Calling Name (CNAM) Database Service at the prices set forth herein where BellSouth is required to provide and is providing unbundled access to local circuit switching to BLC Management.

7.2 To the extent unbundled local circuit switching is converted to market based switching pursuant to Section 4.2.2 of this Attachment, BellSouth may, at its discretion, provide access to BellSouth Switched Access (SWA) 8XX Toll Free Dialing Ten Digit Screening Service, LIDB, Signaling, Signaling Link Transport, Signaling Transfer Points, SS7 AIN Access, Service Control Point\Databases, Local Number Portability Databases, SS7 Network Interconnection, Calling Name (CNAM) at market based rates pursuant to a separate agreement or tariff.

8 BellSouth Switched Access (SWA) 8XX Toll Free Dialing Ten Digit Screening Service

8.1 The BellSouth SWA 8XX Toll Free Dialing Ten Digit Screening Service database (8XX SCP Database) is a SCP that contains customer record information and the functionality to provide call-handling instructions for 8XX calls. The 8XX SCP IN software stores data downloaded from the national SMS/8XX database and provides the routing instructions in response to queries from the SSP or tandem. The BellSouth SWA 8XX Toll Free Dialing Ten Digit Screening Service (8XX TFD Service) utilizes the 8XX SCP Database to provide identification and routing of the 8XX calls, based on the ten digits dialed. At BLC Management's option, 8XX TFD Service is provided with or without POTS number delivery, dialing number delivery, and other optional complex features as selected by BLC Management.

8.2 The 8XX SCP Database is designated to receive and respond to queries using the ANSI Specification of Signaling System Seven (SS7) protocol.

9 Line Information Database

9.1 LIDB is a transaction-oriented database accessible through Common Channel Signaling (CCS) networks. For access to LIDB, BLC Management must purchase appropriate signaling links pursuant to Section 10 of this Attachment. LIDB contains records associated with End User Line Numbers and Special Billing Numbers. LIDB accepts queries from other Network Elements and provides appropriate responses. The query originator need not be the owner of LIDB data. LIDB queries include functions such as screening billed numbers that provides the ability to accept Collect or Third Number Billing calls and validation of Telephone

Line Number based non-proprietary calling cards. The interface for the LIDB functionality is the interface between BellSouth's CCS network and other CCS networks. LIDB also interfaces to administrative systems.

9.2 Technical Requirements

9.2.1 BellSouth will offer to BLC Management any additional capabilities that are developed for LIDB during the life of this Agreement.

9.2.2 BellSouth shall process BLC Management's customer records in LIDB at least at parity with BellSouth customer records, with respect to other LIDB functions. BellSouth shall indicate to BLC Management what additional functions (if any) are performed by LIDB in the BellSouth network.

9.2.3 Within two (2) weeks after a request by BLC Management, BellSouth shall provide BLC Management with a list of the customer data items, which BLC Management would have to provide in order to support each required LIDB function. The list shall indicate which data items are essential to LIDB function and which are required only to support certain services. For each data item, the list shall show the data formats, the acceptable values of the data item and the meaning of those values.

9.2.4 BellSouth shall provide LIDB systems for which operating deficiencies that would result in calls being blocked shall not exceed thirty (30) minutes per year.

9.2.5 BellSouth shall provide LIDB systems for which operating deficiencies that would not result in calls being blocked shall not exceed twelve (12) hours per year.

9.2.6 BellSouth shall provide LIDB systems for which the LIDB function shall be in overload no more than twelve (12) hours per year.

9.2.7 All additions, updates and deletions of BLC Management data to the LIDB shall be solely at the direction of BLC Management. Such direction from BLC Management will not be required where the addition, update or deletion is necessary to perform standard fraud control measures (e.g., calling card auto-deactivation).

9.2.8 BellSouth shall provide priority updates to LIDB for BLC Management data upon BLC Management's request (e.g., to support fraud detection), via password-protected telephone card, facsimile, or electronic mail within one hour of notice from the established BellSouth contact.

9.2.9 BellSouth shall provide LIDB systems such that no more than 0.01% of BLC Management customer records will be missing from LIDB, as measured by BLC Management audits. BellSouth will audit BLC Management records in LIDB against Data Base Administration System (DBAS) to identify record mismatches

and provide this data to a designated BLC Management contact person to resolve the status of the records and BellSouth will update system appropriately. BellSouth will refer record of mismatches to BLC Management within one (1) business day of audit. Once reconciled records are received back from BLC Management, BellSouth will update LIDB the same business day if less than 500 records are received before 1:00PM Central Time. If more than 500 records are received, BellSouth will contact BLC Management to negotiate a time frame for the updates, not to exceed three business days.

9.2.10 BellSouth shall perform backup and recovery of all of BLC Management's data in LIDB including sending to LIDB all changes made since the date of the most recent backup copy, in at least the same time frame BellSouth performs backup and recovery of BellSouth data in LIDB for itself. Currently, BellSouth performs backups of the LIDB for itself on a weekly basis; and when a new software release is scheduled, a backup is performed prior to loading the new release.

9.2.11 BellSouth shall provide BLC Management with LIDB reports of data which are missing or contain errors, as well as any misrouted errors, within a reasonable time period as negotiated between BLC Management and BellSouth.

9.2.12 BellSouth shall prevent any access to or use of BLC Management data in LIDB by BellSouth personnel that are outside of established administrative and fraud control personnel, or by any other Party that is not authorized by BLC Management in writing.

9.2.13 BellSouth shall provide BLC Management performance of the LIDB Data Screening function, which allows a LIDB to completely or partially deny specific query originators access to LIDB data owned by specific data owners, for Customer Data that is part of an NPA-NXX or RAO-0/1XX wholly or partially owned by BLC Management at least at parity with BellSouth Customer Data. BellSouth shall obtain from BLC Management the screening information associated with LIDB Data Screening of BLC Management data in accordance with this requirement. BellSouth currently does not have LIDB Data Screening capabilities. When such capability is available, BellSouth shall offer it to BLC Management under the BFR/NBR process as set forth in Attachment 11.

9.2.14 BellSouth shall accept queries to LIDB associated with BLC Management customer records and shall return responses in accordance with industry standards.

9.2.15 BellSouth shall provide mean processing time at the LIDB within 0.50 seconds under normal conditions as defined in industry standards.

9.2.16 BellSouth shall provide processing time at the LIDB within 1 second for 99% of all messages under normal conditions as defined in industry standards.

9.3 <u>Interface Requirements</u>

9.3.1 BellSouth shall offer LIDB in accordance with the requirements of this subsection.

9.3.2 The interface to LIDB shall be in accordance with the technical references contained within.

9.3.3 The CCS interface to LIDB shall be the standard interface described herein.

9.3.4 The LIDB Data Base interpretation of the ANSI-TCAP messages shall comply with the technical reference herein. Global Title Translation (GTT) shall be maintained in the signaling network in order to support signaling network routing to the LIDB.

9.3.5 The application of the LIDB rates contained in Exhibit A to this Attachment will be based on a Percent CLEC LIDB Usage (PCLU) factor. BLC Management shall provide BellSouth a PCLU. The PCLU will be applied to determine the percentage of total LIDB usage to be billed to the other Party at local rates. BLC Management shall update its PCLU on the first of January, April, July and October and shall send it to BellSouth to be received no later than thirty (30) calendar days after the first of each such month based on local usage for the past three months ending the last day of December, March, June and September, respectively. Requirements associated with PCLU calculation and reporting shall be as set forth in BellSouth's Jurisdictional Factors Reporting Guide, as it is amended from time to time.

10 <u>Signaling</u>

10.1 BellSouth shall offer access to signaling and access to BellSouth's signaling databases subject to compatibility testing and at the rates set forth in this Attachment. BellSouth may provide mediated access to BellSouth signaling systems and databases. Available signaling elements include signaling links, signal transfer points and service control points. Signaling functionality will be available with both A-link and B-link connectivity.

10.2 **<u>Signaling Link Transport</u>**

10.2.1 Signaling Link Transport is a set of two (2) or four (4) dedicated 56 kbps transmission paths between BLC Management designated Signaling Points of Interconnection that provide appropriate physical diversity.

10.2.2 <u>Technical Requirements</u>

10.2.3 Signaling Link Transport shall consist of full duplex mode 56 kbps transmission paths and shall perform in the following two ways:

10.2.3.1 As an "A-link" Signaling Link Transport is a connection between a switch or SCP and a home Signaling Transfer Point switch pair; and

10.2.3.2 As a "B-link" Signaling Link Transport is a connection between two Signaling Transfer Point switch pairs in different company networks (e.g., between two Signaling Transfer Point switch pairs for two CLECs).

10.2.4 Signaling Link Transport shall consist of two (2) or more signaling link layers as follows:

10.2.4.1 An A-link layer shall consist of two (2) links.

10.2.4.2 A B-link layer shall consist of four (4) links.

10.2.4.3 A signaling link layer shall satisfy interoffice and intraoffice diversity of facilities and equipment, such that:

10.2.4.4 No single failure of facilities or equipment causes the failure of both links in an A-link layer (i.e., the links should be provided on a minimum of two (2) separate physical paths end-to-end); and

10.2.4.5 No two (2) concurrent failures of facilities or equipment shall cause the failure of all four (4) links in a B-link layer (i.e., the links should be provided on a minimum of three separate physical paths end-to-end).

10.2.5 Interface Requirements

10.2.5.1 There shall be a DS1 (1.544 Mbps) interface at BLC Management's designated SPOIs. Each 56 kbps transmission path shall appear as a DS0 channel within the DS1 interface.

10.3 **Signaling Transfer Points**

10.3.1 A STP is a signaling network function that includes all of the capabilities provided by the signaling transfer point switches (STPS) and their associated signaling links that enables the exchange of SS7 messages among and between switching elements, database elements and signaling transfer point switches.

10.3.2 Technical Requirements

10.3.2.1 STPs shall provide access to BellSouth Local Switching or Tandem Switching and to BellSouth Service Control Points/Databases connected to BellSouth SS7 network. STPs also provide access to third-party local or tandem switching and third-party-provided STPs.

10.3.2.2 The connectivity provided by STPs shall fully support the functions of all other Network Elements connected to the BellSouth SS7 network. This includes the use of the BellSouth SS7 network to convey messages that neither originate nor terminate at a signaling end point directly connected to the BellSouth SS7 network (i.e., transit messages). When the BellSouth SS7 network is used to convey transit

messages, there shall be no alteration of the Integrated Services Digital Network User Part or Transaction Capabilities Application Part (TCAP) user data that constitutes the content of the message.

10.3.2.3 If a BellSouth tandem switch routes traffic, based on dialed or translated digits, on SS7 trunks between a BLC Management local switch and third party local switch, the BellSouth SS7 network shall convey the TCAP messages that are necessary to provide Call Management features (Automatic Callback, Automatic Recall, and Screening List Editing) between BLC Management local STPs and the STPs that provide connectivity with the third party local switch, even if the third party local switch is not directly connected to BellSouth STPs.

10.3.2.4 STPs shall provide all functions of the SCCP necessary for Class 0 (basic connectionless) service as defined in Telcordia ANSI Interconnection Requirements. This includes GTT and SCCP Management procedures, as specified in ANSI T1.112.4. Where the destination signaling point is a BLC Management or third party local or tandem switching system directly connected to BellSouth SS7 network, BellSouth shall perform final GTT of messages to the destination and SCCP Subsystem Management of the destination. In all other cases, BellSouth shall perform intermediate GTT of messages to a gateway pair of STPs in an SS7 network connected with BellSouth SS7 network and shall not perform SCCP Subsystem Management of the destination. If BellSouth performs final GTT to a BLC Management database, then BLC Management agrees to provide BellSouth with the Destination Point Code for BLC Management database.

10.3.2.5 STPs shall provide all functions of the Operations, Maintenance and Administration Part (OMAP) as specified in applicable industry standard technical references, which may include, where available in BellSouth's network, MTP Routing Verification Test (MRVT) and SCCP Routing Verification Test (SRVT).

10.3.2.6 Where the destination signaling point is a BellSouth local or tandem switching system or database, or is a BLC Management or third party local or tandem switching system directly connected to the BellSouth SS7 network, STPs shall perform MRVT and SRVT to the destination signaling point. In all other cases, STPs shall perform MRVT and SRVT to a gateway pair of STPs in an SS7 network connected with the BellSouth SS7 network. This requirement may be superseded by the specifications for Internetwork MRVT and SRVT when these become approved ANSI standards and available capabilities of BellSouth STPs.

10.4 **SS7**

10.4.1 When technically feasible and upon request by BLC Management, SS7 AIN Access shall be made available in association with switching. SS7 AIN Access is the provisioning of AIN 0.1 triggers in an equipped BellSouth local switch and

interconnection of the BellSouth SS7 network with BLC Management's SS7 network to exchange TCAP queries and responses with a BLC Management SCP.

10.4.2 SS7 AIN Access shall provide BLC Management SCP access to an equipped BellSouth local switch via interconnection of BellSouth's SS7 and BLC Management SS7 Networks. BellSouth shall offer SS7 AIN Access through its STPs. If BellSouth requires a mediation device on any part of its network specific to this form of access, BellSouth must route its messages in the same manner. The interconnection arrangement shall result in the BellSouth local switch recognizing the BLC Management SCP as at least at parity with BellSouth's SCPs in terms of interfaces, performance and capabilities.

10.4.3 Interface Requirements

10.4.3.1 BellSouth shall provide the following STP options to connect BLC Management or BLC Management-designated local switching systems to the BellSouth SS7 network:

10.4.3.1.1 An A-link interface from BLC Management local switching systems; and,

10.4.3.1.2 A B-link interface from BLC Management local STPs.

10.4.3.2 Each type of interface shall be provided by one or more layers of signaling links.

10.4.3.3 The Signaling Point of Interconnection for each link shall be located at a cross-connect element in the CO where the BellSouth STP is located. There shall be a DS1 or higher rate transport interface at each of the SPOIs. Each signaling link shall appear as a DS0 channel within the DS1 or higher rate interface.

10.4.3.4 BellSouth shall provide intraoffice diversity between the SPOI and BellSouth STPs so that no single failure of intraoffice facilities or equipment shall cause the failure of both B-links in a layer connecting to a BellSouth STP.

10.4.3.5 STPs shall provide all functions of the MTP as defined in the applicable industry standard technical references.

10.4.4 Message Screening

10.4.4.1 BellSouth shall set message screening parameters so as to accept valid messages from BLC Management local or tandem switching systems destined to any signaling point within BellSouth's SS7 network where the BLC Management switching system has a valid signaling relationship.

10.4.4.2 BellSouth shall set message screening parameters so as to pass valid messages from BLC Management local or tandem switching systems destined to any signaling point or network accessed through BellSouth's SS7 network where the BLC Management switching system has a valid signaling relationship.

10.4.4.3 BellSouth shall set message screening parameters so as to accept and pass/send valid messages destined to and from BLC Management from any signaling point or network interconnected through BellSouth's SS7 network where the BLC Management SCP has a valid signaling relationship.

10.5 **Service Control Points (SCP)/Databases**

10.5.1 Call Related Databases provide the storage of, access to, and manipulation of information required to offer a particular service and/or capability. BellSouth shall provide access to the following Databases: Local Number Portability, LIDB, Toll Free Number Database, Automatic Location Identification/Data Management System, and Calling Name Database. BellSouth also provides access to Service Creation Environment and Service Management System (SCE/SMS) application databases and Directory Assistance.

10.5.2 A SCP is deployed in a SS7 network that executes service application logic in response to SS7 queries sent to it by a switching system also connected to the SS7 network. Service Management Systems provide operational interfaces to allow for provisioning, administration and maintenance of subscriber data and service application data stored in SCPs.

10.5.3 Technical Requirements for SCPs/Databases

10.5.3.1 BellSouth shall provide physical access to SCPs through the SS7 network and protocols with TCAP as the application layer protocol.

10.5.3.2 BellSouth shall provide physical interconnection to databases via industry standard interfaces and protocols (e.g. SS7, ISDN and X.25).

10.5.3.3 The reliability of interconnection options shall be consistent with requirements for diversity and survivability.

10.6 **Local Number Portability Database**

10.6.1 The Permanent Number Portability (PNP) database supplies routing numbers for calls involving numbers that have been ported from one local service provider to another. BellSouth agrees to provide access to the PNP database at rates, terms and conditions as set forth by BellSouth and in accordance with an effective FCC or Commission directive.

10.7 **SS7 Network Interconnection**

10.7.1 SS7 Network Interconnection is the interconnection of BLC Management local signaling transfer point switches or BLC Management local or tandem switching systems with BellSouth signaling transfer point switches. This interconnection

provides connectivity that enables the exchange of SS7 messages among BellSouth switching systems and databases, BLC Management local or tandem switching systems, and other third-party switching systems directly connected to the BellSouth SS7 network.

10.7.2 The connectivity provided by SS7 Network Interconnection shall fully support the functions of BellSouth switching systems and databases and BLC Management or other third-party switching systems with A-link access to the BellSouth SS7 network.

10.7.3 If traffic is routed based on dialed or translated digits between a BLC Management local switching system and a BellSouth or other third-party local switching system, either directly or via a BellSouth tandem switching system, then it is a requirement that the BellSouth SS7 network convey via SS7 Network Interconnection the TCAP messages that are necessary to provide Call Management services (Automatic Callback, Automatic Recall, and Screening List Editing) between the BLC Management local signaling transfer point switches and BellSouth or other third-party local switch.

10.7.4 SS7 Network Interconnection shall provide:

10.7.4.1 Signaling Data Link functions, as specified in ANSI T1.111.2;

10.7.4.2 Signaling Link functions, as specified in ANSI T1.111.3; and

10.7.4.3 Signaling Network Management functions, as specified in ANSI T1.111.4.

10.7.5 SS7 Network Interconnection shall provide all functions of the SCCP necessary for Class 0 (basic connectionless) service as specified in ANSI T1.112. This includes GTT and SCCP Management procedures as specified in ANSI T1.112.4. Where the destination signaling point is a BellSouth switching system or DB, or is another third-party local or tandem switching system directly connected to the BellSouth SS7 network, SS7 Network Interconnection shall include final GTT of messages to the destination and SCCP Subsystem Management of the destination. Where the destination signaling point is a BLC Management local or tandem switching system, SS7 Network Interconnection shall include intermediate GTT of messages to a gateway pair of BLC Management local STPs and shall not include SCCP Subsystem Management of the destination.

10.7.6 SS7 Network Interconnection shall provide all functions of the Integrated Services Digital Network User Part as specified in ANSI T1.113.

10.7.7 SS7 Network Interconnection shall provide all functions of the TCAP as specified in ANSI T1.114.

10.7.8 If Internetwork MRVT and SRVT become approved ANSI standards and available capabilities of BellSouth STPs, SS7 Network Interconnection may provide these functions of the OMAP.

10.7.9 Interface Requirements

10.7.9.1 The following SS7 Network Interconnection interface options are available to connect BLC Management or BLC Management-designated local or tandem switching systems or signaling transfer point switches to the BellSouth SS7 network:

10.7.9.1.1 A-link interface from BLC Management local or tandem switching systems; and

10.7.9.1.2 B-link interface from BLC Management STPs.

10.7.9.2 The Signaling Point of Interconnection for each link shall be located at a cross-connect element in the central office where the BellSouth STP is located. There shall be a DS1 or higher rate transport interface at each of the Signaling Points of interconnection. Each signaling link shall appear as a DS0 channel within the DS1 or higher rate interface.

10.7.9.3 BellSouth shall provide intraoffice diversity between the Signaling Points of Interconnection and the BellSouth STP, so that no single failure of intraoffice facilities or equipment shall cause the failure of both B-links in a layer connecting to a BellSouth STP.

10.7.9.4 The protocol interface requirements for SS7 Network Interconnection include the MTP, ISDNUP, SCCP, and TCAP. These protocol interfaces shall conform to the applicable industry standard technical references.

10.7.9.5 BellSouth shall set message screening parameters to accept messages from BLC Management local or tandem switching systems destined to any signaling point in the BellSouth SS7 network with which the BLC Management switching system has a valid signaling relationship.

11 Automatic Location Identification/Data Management System (ALI/DMS)

11.1 The ALI/DMS Database contains End User information (including name, address, telephone information, and sometimes special information from the local service provider or End User) used to determine to which PSAP to route the call. The ALI/DMS database is used to provide enhanced routing flexibility for E911. BLC Management will be required to provide BellSouth daily updates to E911 database. BLC Management shall also be responsible for providing BellSouth with complete and accurate data for submission to the 911/E911 database for the purpose of providing 911/E911 service to its End Users.

11.2 Technical Requirements

11.2.1 BellSouth shall provide BLC Management the capability of providing updates to the ALI/DMS database. BellSouth shall provide error reports from the ALI/DMS database to BLC Management after BLC Management provides End User information for input into the ALI/DMS database.

11.2.2 BLC Management shall conform to the National Emergency Number Association (NENA) recommended standards for LNP and updating the ALI/DMS database.

12 Calling Name Database Service

12.1 CNAM is the ability to associate a name with the calling party number, allowing the End User (to which a call is being terminated) to view the calling party's name before the call is answered. The calling party's information is accessed by queries launched to the CNAM database. This service also provides BLC Management the opportunity to load and store its subscriber names in the BellSouth CNAM SCPs.

12.2 BLC Management shall submit to BellSouth a notice of its intent to access and utilize BellSouth CNAM Database Services. Said notice shall be in writing no less than sixty (60) calendar days prior to BLC Management's access to BellSouth's CNAM Database Services and shall be addressed to BLC Management's Local Contract Manager.

12.3 BellSouth's provision of CNAM Database Services to BLC Management requires interconnection from BLC Management to BellSouth CNAM SCPs. Such interconnections shall be established pursuant to Attachment 3 of this Agreement.

12.4 In order to formulate a CNAM query to be sent to the BellSouth CNAM SCP, BLC Management shall provide its own CNAM SSP. BLC Management's CNAM SSPs must be compliant with TR-NWT-001188, "CLASS Calling Name Delivery Generic Requirements".

12.5 If BLC Management elects to access the BellSouth CNAM SCP via a third party CCS7 transport provider, the third party CCS7 provider shall interconnect with the BellSouth CCS7 network according to BellSouth's Common Channel Signaling Interconnection Guidelines and Telcordia's CCS Network Interface Specification document, TR-TSV-000905. In addition, the third party provider shall establish CCS7 interconnection at the BellSouth Local Signal Transfer Points (LSTPs) serving the BellSouth CNAM SCPs that BLC Management desires to query.

12.6 If BLC Management queries the BellSouth CNAM SCP via a third party national SS7 transport provider, the third party SS7 provider shall interconnect with the BellSouth CCS7 network according to BellSouth's Common Channel Signaling Interconnection Guidelines and Telcordia's CCS Network Interface Specification

document, TR-TSV-000905. In addition, the third party provider shall establish SS7 interconnection at one or more of the BellSouth Gateway STPs. The payment of all costs associated with the transport of SS7 signals via a third party will be established by mutual agreement of the Parties and this Agreement shall be amended in accordance with modification of the General Terms and Conditions incorporated herein by this reference.

12.7 The mechanism to be used by BLC Management for initial CNAM record load and/or updates shall be determined by mutual agreement. The initial load and all updates shall be provided by BLC Management in the BellSouth specified format and shall contain records for every working telephone number that can originate phone calls. It is the responsibility of BLC Management to provide accurate information to BellSouth on a current basis.

12.8 Updates to the SMS shall occur no less than once a week, reflect service order activity affecting either name or telephone number, and involve only record additions, deletions or changes.

12.9 BLC Management CNAM records provided for storage in the BellSouth CNAM SCP shall be available, on a SCP query basis only, to all Parties querying the BellSouth CNAM SCP. Further, CNAM service shall be provided by each Party consistent with state and/or federal regulation.

13 Service Creation Environment and Service Management System (SCE/SMS) Advanced Intelligent Network Access

13.1 BellSouth's SCE/SMS AIN Access shall provide BLC Management the capability to create service applications in a BellSouth SCE and deploy those applications in a BellSouth SMS to a BellSouth SCP.

13.2 BellSouth's SCE/SMS AIN Access shall provide access to SCE hardware, software, testing and technical support (e.g., help desk, system administrator) resources available to BLC Management. Training, documentation, and technical support will address use of SCE and SMS access and administrative functions but will not include support for the creation of a specific service application.

13.3 BellSouth SCP shall partition and protect BLC Management service logic and data from unauthorized access.

13.4 When BLC Management selects SCE/SMS AIN Access, BellSouth shall provide training, documentation, and technical support to enable BLC Management to use BellSouth's SCE/SMS AIN Access to create and administer applications.

13.5 BLC Management access will be provided via remote data connection (e.g., dial-in, ISDN).

13.6 BellSouth shall allow BLC Management to download data forms and/or tables to BellSouth SCP via BellSouth SMS without intervention from BellSouth.

14 Operational Support Systems

14.1 BellSouth has developed and made available electronic interfaces by which BLC Management may submit LSRs electronically.

14.2 LSRs submitted by means of one of these electronic interfaces will incur an OSS electronic ordering charge. An individual LSR will be identified for billing purposes by its Purchase Order Number (PON). LSRs submitted by means other than one of these interactive interfaces (mail, fax, courier, etc.) will incur a manual order charge. All OSS charges are specified in Exhibit A of this Attachment.

14.3 Denial/Restoral OSS Charge

14.3.1 In the event BLC Management provides a list of customers to be denied and restored, rather than an LSR, each location on the list will require a separate PON and therefore will be billed as one LSR per location.

14.4 Cancellation OSS Charge

14.4.1 BLC Management will incur an OSS charge for an accepted LSR that is later canceled.

14.5 Supplements or clarifications to a previously billed LSR will not incur another OSS charge.

14.6 Network Elements and Other Services Manual Additive

14.6.1 The Commissions in some states have ordered per element manual additive nonrecurring charges (NRC) for Network Elements and Other Services ordered by means other than one of the interactive interfaces. These ordered Network Elements and Other Services manual additive NRCs will apply in these states, rather than the charge per LSR. The per element charges are listed in Exhibit A.

UNBUNDLED NETWORK ELEMENTS - Alabama														Attachment: 2		Exhibit: A	
CATEGORY		RATE ELEMENTS	Interim	Zone	BCS	USOC	RATES ($)					Svc Order Submitted Elec per LSR	Svc Order Submitted Manually per LSR	Incremental Charge - Manual Svc Order vs. Electronic-1st	Incremental Charge - Manual Svc Order vs. Electronic-Add'l	Incremental Charge - Manual Svc Order vs. Electronic-Disc 1st	Incremental Charge - Manual Svc Order vs. Electronic-Disc Add'l
							Rec	Nonrecurring		Nonrecurring Disconnect		OSS Rates ($)					
								First	Add'l	First	Add'l	SOMEC	SOMAN	SOMAN	SOMAN	SOMAN	SOMAN
	The "Zone" shown in the sections for stand-alone loops or loops as part of a combination refers to Geographically Deaveraged UNE Zones. To view Geographically Deaveraged UNE Zone Designations by Central Office, refer to internet Website: http://www.interconnection.bellsouth.com/become_a_clec/html/interconnection.htm																
OPERATIONAL SUPPORT SYSTEMS (OSS) - "REGIONAL RATES"																	
	NOTE: (1) CLEC should contact its contract negotiator if it prefers the "state specific" OSS charges as ordered by the State Commissions. The OSS charges currently contained in this rate exhibit are the BellSouth "regional" service ordering charges. CLEC may elect either the state specific Commission ordered rates for the service ordering charges, or CLEC may elect the regional service ordering charge, however, CLEC can not obtain a mixture of the two regardless if CLEC has a interconnection contract established in each of the 9 states.																
	NOTE: (2) Any element that can be ordered electronically will be billed according to the SOMEC rate listed in this category. Please refer to BellSouth's Local Ordering Handbook (LOH) to determine if a product can be ordered electronically. For those elements that cannot be ordered electronically at present per the LOH, the listed SOMEC rate in this category reflects the charge that would be billed to a CLEC once electronic ordering capabilities come on-line for that element. Otherwise, the manual ordering charge, SOMAN, will be applied to a CLECs bill when it submits an LSR to BellSouth.																
		OSS - Electronic Service Order Charge, Per Local Service Request (LSR) - UNE Only				SOMEC		3.50	0.00	3.50	0.00						
		OSS - Manual Service Order Charge, Per Local Service Request (LSR) - UNE Only				SOMAN		15.66	0.00	1.97	0.00						
UNE SERVICE DATE ADVANCEMENT CHARGE																	
	NOTE: The Expedite charge will be maintained commensurate with BellSouth's FCC No.1 Tariff, Section 5 as applicable.																
		UNE Expedite Charge per Circuit or Line Assignable USOC, per Day			UAL, UEANL, UCL, UEF, UDF, UEQ, UDL, UENTW, UDN, UEA, UHL, ULC, USL, U1T12, U1T48, U1TD1, U1TD3, U1TDX, U1TO3, U1TS1, U1TVX, UC1BC, UC1BL, UC1CC, UC1CL, UC1DC, UC1DL, UC1EC, UC1EL, UC1FC, UC1FL, UC1GC, UC1GL, UC1HC, UC1HL, UDL12, UDL48, UDLO3, UDLSX, UE3, ULD12, ULD48, ULDD1, ULDD3, ULDDX, ULDO3, ULDS1, ULDVX, UNC1X, UNC3X, UNCDX, UNCNX, UNCSX, UNCVX, UNLD1, UNLD3, UXTD1, UXTD3, UXTS1, U1TUC, U1TUD, U1TUB, U1TUA	SDASP		200.00									
UNBUNDLED EXCHANGE ACCESS LOOP																	
	2-WIRE ANALOG VOICE GRADE LOOP																
		2-Wire Analog Voice Grade Loop - Service Level 1- Zone 1		1	UEANL	UEAL2	12.58	37.81	17.56	23.49	5.30						
		2-Wire Analog Voice Grade Loop - Service Level 1- Zone 2		2	UEANL	UEAL2	21.05	37.81	17.56	23.49	5.30						
		2-Wire Analog Voice Grade Loop - Service Level 1- Zone 3		3	UEANL	UEAL2	34.34	37.81	17.56	23.49	5.30						
		2-Wire Analog Voice Grade Loop - Service Level 1- Zone 1		1	UEANL	UEASL	12.58	37.81	17.56	23.49	5.30						
		2-Wire Analog Voice Grade Loop - Service Level 1- Zone 2		2	UEANL	UEASL	21.05	37.81	17.56	23.49	5.30						
		2-Wire Analog Voice Grade Loop - Service Level 1- Zone 3		3	UEANL	UEASL	34.34	37.81	17.56	23.49	5.30						
		Unbundled Miscellaneous Rate Element, Tag Loop at End User Premise			UEANL	URETL		8.33	0.83								
		Loop Testing - Basic 1st Half Hour			UEANL	URET1		34.16	34.16								
		Loop Testing - Basic Additional Half Hour			UEANL	URETA		19.85	19.85								

UNBUNDLED NETWORK ELEMENTS - Alabama														Attachment: 2		Exhibit: A	
CATEGORY		RATE ELEMENTS	Interim	Zone	BCS	USOC	RATES ($)					Svc Order Submitted Elec per LSR	Svc Order Submitted Manually per LSR	Incremental Charge - Manual Svc Order vs. Electronic-1st	Incremental Charge - Manual Svc Order vs. Electronic-Add'l	Incremental Charge - Manual Svc Order vs. Electronic-Disc 1st	Incremental Charge - Manual Svc Order vs. Electronic-Disc Add'l
							Rec	Nonrecurring		Nonrecurring Disconnect		OSS Rates ($)					
								First	Add'l	First	Add'l	SOMEC	SOMAN	SOMAN	SOMAN	SOMAN	SOMAN
		CLEC to CLEC Conversion Charge Without Outside Dispatch (UVL-SL1)			UEANL	UREWO		15.78	8.94								
		Unbundled Voice Loop, Non-Design Voice Loop, billing for BST providing make-up (Engineering Information - E.I.)			UEANL	UEANM		13.44									
		Manual Order Coordination for UVL-SL1s (per loop)			UEANL	UEAMC		8.15	8.15								
		Order Coordination for Specified Conversion Time for UVL-SL1 (per LSR)			UEANL	OCOSL		18.09									
	2-WIRE Unbundled COPPER LOOP																
		2-Wire Unbundled Copper Loop - Non-Designed Zone 1		1	UEQ	UEQ2X	11.20	34.14	15.10	21.25	4.15						
		2 Wire Unbundled Copper Loop - Non-Designed - Zone 2		2	UEQ	UEQ2X	13.27	34.14	15.10	21.25	4.15						
		2 Wire Unbundled Copper Loop - Non-Designed - Zone 3		3	UEQ	UEQ2X	15.07	34.14	15.10	21.25	4.15						
		Unbundled Miscellaneous Rate Element, Tag Loop at End User Premise			UEQ	URETL		8.33	0.83								
		Manual Order Coordination 2 Wire Unbundled Copper Loop - Non-Designed (per loop)			UEQ	USBMC		8.15									
		Unbundled Copper Loop, Non-Design Copper Loop, billing for BST providing make-up (Engineering Information - E.I.)			UEQ	UEQMU		13.44									
		Loop Testing - Basic 1st Half Hour			UEQ	URET1		34.16	34.16								
		Loop Testing - Basic Additional Half Hour			UEQ	URETA		19.85	19.85								
		CLEC to CLEC Conversion Charge Without Outside Dispatch (UCL-ND)			UEQ	UREWO		14.27	7.43								
UNBUNDLED EXCHANGE ACCESS LOOP																	
	2-WIRE ANALOG VOICE GRADE LOOP																
		2 Wire Analog Voice Grade Loop-Service Level 1-Line Splitting-Zone 1		1	UEPSR UEPSB	UEALS	12.58	37.81	17.56	23.49	5.30						
		2 Wire Analog Voice Grade Loop-Service Level 1-Line Splitting-Zone 1		1	UEPSR UEPSB	UEABS	12.58	37.81	17.56	23.49	5.30						
		2 Wire Analog Voice Grade Loop- Service Level 1-Line Splitting-Zone 2		2	UEPSR UEPSB	UEALS	21.05	37.81	17.56	23.49	5.30						
		2 Wire Analog Voice Grade Loop- Service Level 1-Line Splitting-Zone 2		2	UEPSR UEPSB	UEABS	21.05	37.81	17.56	23.49	5.30						
		2 Wire Analog Voice Grade Loop-Service Level 1-Line Splitting-Zone 3		3	UEPSR UEPSB	UEALS	34.34	37.81	17.56	23.49	5.30						
		2 Wire Analog Voice Grade Loop-Service Level 1-Line Splitting-Zone 3		3	UEPSR UEPSB	UEABS	34.34	37.81	17.56	23.49	5.30						
UNBUNDLED EXCHANGE ACCESS LOOP																	
	2-WIRE ANALOG VOICE GRADE LOOP																
		2-Wire Analog Voice Grade Loop - Service Level 2 w/Loop or Ground Start Signaling - Zone 1		1	UEA	UEAL2	14.38	88.00	55.00	47.24	7.44						
		2-Wire Analog Voice Grade Loop - Service Level 2 w/Loop or Ground Start Signaling - Zone 2		2	UEA	UEAL2	22.85	88.00	55.00	47.24	7.44						
		2-Wire Analog Voice Grade Loop - Service Level 2 w/Loop or Ground Start Signaling - Zone 3		3	UEA	UEAL2	36.14	88.00	55.00	47.24	7.44						
		Order Coordination for Specified Conversion Time (per LSR)			UEA	OCOSL		18.09									
		2-Wire Analog Voice Grade Loop - Service Level 2 w/Reverse Battery Signaling - Zone 1		1	UEA	UEAR2	14.38	88.00	55.00	47.24	7.44						
		2-Wire Analog Voice Grade Loop - Service Level 2 w/Reverse Battery Signaling - Zone 2		2	UEA	UEAR2	22.85	88.00	55.00	47.24	7.44						
		2-Wire Analog Voice Grade Loop - Service Level 2 w/Reverse Battery Signaling - Zone 3		3	UEA	UEAR2	36.14	88.00	55.00	47.24	7.44						
		Order Coordination for Specified Conversion Time (per LSR)			UEA	OCOSL		18.09									
		CLEC to CLEC Conversion Charge without outside dispatch			UEA	UREWO		87.72	36.36								
		Loop Tagging - Service Level 2 (SL2)			UEA	URETL		11.21	1.10								
	4-WIRE ANALOG VOICE GRADE LOOP																
		4-Wire Analog Voice Grade Loop - Zone 1		1	UEA	UEAL4	25.34	131.97	94.51	59.14	14.50						
		4-Wire Analog Voice Grade Loop - Zone 2		2	UEA	UEAL4	38.58	131.97	94.51	59.14	14.50						
		4-Wire Analog Voice Grade Loop - Zone 3		3	UEA	UEAL4	60.02	131.97	94.51	59.14	14.50						
		Order Coordination for Specified Conversion Time (per LSR)			UEA	OCOSL		18.09									
		CLEC to CLEC Conversion Charge without outside dispatch			UEA	UREWO		87.72	36.36								

UNBUNDLED NETWORK ELEMENTS - Alabama														Attachment: 2		Exhibit: A	
CATEGORY		RATE ELEMENTS	Interim	Zone	BCS	USOC	RATES ($)					Svc Order Submitted Elec per LSR	Svc Order Submitted Manually per LSR	Incremental Charge - Manual Svc Order vs. Electronic-1st	Incremental Charge - Manual Svc Order vs. Electronic-Add'l	Incremental Charge - Manual Svc Order vs. Electronic-Disc 1st	Incremental Charge - Manual Svc Order vs. Electronic-Disc Add'l
							Rec	Nonrecurring		Nonrecurring Disconnect		OSS Rates ($)					
								First	Add'l	First	Add'l	SOMEC	SOMAN	SOMAN	SOMAN	SOMAN	SOMAN
	2-WIRE ISDN DIGITAL GRADE LOOP																
		2-Wire ISDN Digital Grade Loop - Zone 1		1	UDN	U1L2X	21.88	117.24	79.77	52.88	10.54						
		2-Wire ISDN Digital Grade Loop - Zone 2		2	UDN	U1L2X	32.85	117.24	79.77	52.88	10.54						
		2-Wire ISDN Digital Grade Loop - Zone 3		3	UDN	U1L2X	48.55	117.24	79.77	52.88	10.54						
		Order Coordination For Specified Conversion Time (per LSR)			UDN	OCOSL		18.09									
		CLEC to CLEC Conversion Charge without outside dispatch			UDN	UREWO		91.63	44.16								
	2-WIRE ASYMMETRICAL DIGITAL SUBSCRIBER LINE (ADSL) COMPATIBLE LOOP																
		2 Wire Unbundled ADSL Loop including manual service inquiry & facility reservation - Zone 1		1	UAL	UAL2X	11.01	110.00	68.00	47.24	7.44						
		2 Wire Unbundled ADSL Loop including manual service inquiry & facility reservation - Zone 2		2	UAL	UAL2X	12.73	110.00	68.00	47.24	7.44						
		2 Wire Unbundled ADSL Loop including manual service inquiry & facility reservation - Zone 3		3	UAL	UAL2X	14.30	110.00	68.00	47.24	7.44						
		Order Coordination for Specified Conversion Time (per LSR)			UAL	OCOSL		18.09									
		2 Wire Unbundled ADSL Loop without manual service inquiry & facility reservaton - Zone 1		1	UAL	UAL2W	11.01	90.00	57.00	47.24	7.44						
		2 Wire Unbundled ADSL Loop without manual service inquiry & facility reservaton - Zone 2		2	UAL	UAL2W	12.73	90.00	57.00	47.24	7.44						
		2 Wire Unbundled ADSL Loop without manual service inquiry & facility reservaton - Zone 3		3	UAL	UAL2W	14.30	90.00	57.00	47.24	7.44						
		Order Coordination for Specified Conversion Time (per LSR)			UAL	OCOSL		18.09									
		CLEC to CLEC Conversion Charge without outside dispatch			UAL	UREWO		86.20	40.40								
	2-WIRE HIGH BIT RATE DIGITAL SUBSCRIBER LINE (HDSL) COMPATIBLE LOOP																
		2 Wire Unbundled HDSL Loop including manual service inquiry & facility reservation - Zone 1		1	UHL	UHL2X	8.74	110.00	68.00	47.24	7.44						
		2 Wire Unbundled HDSL Loop including manual service inquiry & facility reservation - Zone 2		2	UHL	UHL2X	10.17	110.00	68.00	47.24	7.44						
		2 Wire Unbundled HDSL Loop including manual service inquiry & facility reservation - Zone 3		3	UHL	UHL2X	11.44	110.00	68.00	47.24	7.44						
		Order Coordination for Specified Conversion Time (per LSR)			UHL	OCOSL		18.09									
		2 Wire Unbundled HDSL Loop without manual service inquiry and facility reservation - Zone 1		1	UHL	UHL2W	8.74	90.00	57.00	47.24	7.44						
		2 Wire Unbundled HDSL Loop without manual service inquiry and facility reservation - Zone 2		2	UHL	UHL2W	10.17	90.00	57.00	47.24	7.44						
		2 Wire Unbundled HDSL Loop without manual service inquiry and facility reservation - Zone 3		3	UHL	UHL2W	11.44	90.00	57.00	47.24	7.44						
		Order Coordination for Specified Conversion Time (per LSR)			UHL	OCOSL		18.09									
		CLEC to CLEC Conversion Charge without outside dispatch			UHL	UREWO		86.14	40.40								
	4-WIRE HIGH BIT RATE DIGITAL SUBSCRIBER LINE (HDSL) COMPATIBLE LOOP																
		4 Wire Unbundled HDSL Loop including manual service inquiry and facility reservation - Zone 1		1	UHL	UHL4X	13.95	148.36	68.00	51.70	9.73						
		4-Wire Unbundled HDSL Loop including manual service inquiry and facility reservation - Zone 2		2	UHL	UHL4X	15.56	148.36	68.00	51.70	9.73						
		4-Wire Unbundled HDSL Loop including manual service inquiry and facility reservation - Zone 3		3	UHL	UHL4X	15.25	148.36	68.00	51.70	9.73						
		Order Coordination for Specified Conversion Time (per LSR)			UHL	OCOSL		18.09									
		4-Wire Unbundled HDSL Loop without manual service inquiry and facility reservation - Zone 1		1	UHL	UHL4W	13.95	94.00	57.00	51.70	9.73						
		4-Wire Unbundled HDSL Loop without manual service inquiry and facility reservation - Zone 2		2	UHL	UHL4W	15.56	94.00	57.00	51.70	9.73						
		4-Wire Unbundled HDSL Loop without manual service inquiry and facility reservation - Zone 3		3	UHL	UHL4W	15.25	94.00	57.00	51.70	9.73						
		Order Coordination for Specified Conversion Time (per LSR)			UHL	OCOSL		18.09									
		CLEC to CLEC Conversion Charge without outside dispatch			UHL	UREWO		86.14	40.40								
	4-WIRE DS1 DIGITAL LOOP																
		4-Wire DS1 Digital Loop - Zone 1		1	USL	USLXX	82.55	252.47	157.54	44.70	11.71						
		4-Wire DS1 Digital Loop - Zone 2		2	USL	USLXX	154.18	252.47	157.54	44.70	11.71						
		4-Wire DS1 Digital Loop - Zone 3		3	USL	USLXX	314.52	252.47	157.54	44.70	11.71						
		Order Coordination for Specified Conversion Time (per LSR)			USL	OCOSL		18.09									

UNBUNDLED NETWORK ELEMENTS - Alabama														Attachment: 2		Exhibit: A	
CATEGORY	RATE ELEMENTS	Interim	Zone	BCS	USOC	RATES ($)					Svc Order Submitted Elec per LSR	Svc Order Submitted Manually per LSR	Incremental Charge - Manual Svc Order vs. Electronic-1st	Incremental Charge - Manual Svc Order vs. Electronic-Add'l	Incremental Charge - Manual Svc Order vs. Electronic-Disc 1st	Incremental Charge - Manual Svc Order vs. Electronic-Disc Add'l
						Rec	Nonrecurring		Nonrecurring Disconnect		OSS Rates ($)					
							First	Add'l	First	Add'l	SOMEC	SOMAN	SOMAN	SOMAN	SOMAN	SOMAN
	CLEC to CLEC Conversion Charge without outside dispatch			USL	UREWO		101.09	43.05								
4-WIRE 19.2, 56 OR 64 KBPS DIGITAL GRADE LOOP																
	4 Wire Unbundled Digital 19.2 Kbps		1	UDL	UDL19	26.09	126.27	88.80	59.14	14.50						
	4 Wire Unbundled Digital 19.2 Kbps		2	UDL	UDL19	35.95	126.27	88.80	59.14	14.50						
	4 Wire Unbundled Digital 19.2 Kbps		3	UDL	UDL19	37.88	126.27	88.80	59.14	14.50						
	4 Wire Unbundled Digital Loop 56 Kbps - Zone 1		1	UDL	UDL56	26.09	126.27	88.80	59.14	14.50						
	4 Wire Unbundled Digital Loop 56 Kbps - Zone 2		2	UDL	UDL56	35.95	126.27	88.80	59.14	14.50						
	4 Wire Unbundled Digital Loop 56 Kbps - Zone 3		3	UDL	UDL56	37.88	126.27	88.80	59.14	14.50						
	Order Coordination for Specified Conversion Time (per LSR)			UDL	OCOSL		18.09									
	4 Wire Unbundled Digital Loop 64 Kbps - Zone 1		1	UDL	UDL64	26.09	126.27	88.80	59.14	14.50						
	4 Wire Unbundled Digital Loop 64 Kbps - Zone 2		2	UDL	UDL64	35.95	126.27	88.80	59.14	14.50						
	4 Wire Unbundled Digital Loop 64 Kbps - Zone 3		3	UDL	UDL64	37.88	126.27	88.80	59.14	14.50						
	Order Coordination for Specified Conversion Time (per LSR)			UDL	OCOSL		18.09									
	CLEC to CLEC Conversion Charge without outside dispatch			UDL	UREWO		102.13	49.75								
2-WIRE Unbundled COPPER LOOP																
	2-Wire Unbundled Copper Loop-Designed including manual service inquiry & facility reservation - Zone 1		1	UCL	UCLPB	11.01	112.46	65.30	47.24	7.44						
	2-Wire Unbundled Copper Loop-Designed including manual service inquiry & facility reservation - Zone 2		2	UCL	UCLPB	12.73	112.46	65.30	47.24	7.44						
	2 Wire Unbundled Copper Loop-Designed including manual service inquiry & facility reservation - Zone 3		3	UCL	UCLPB	14.30	112.46	65.30	47.24	7.44						
	Order Coordination for Unbundled Copper Loops (per loop)			UCL	UCLMC		8.15	8.15								
	2-Wire Unbundled Copper Loop-Designed without manual service inquiry and facility reservation - Zone 1	I	1	UCL	UCLPW	11.01	91.46	54.30	47.24	7.44						
	2-Wire Unbundled Copper Loop-Designed without manual service inquiry and facility reservation - Zone 2	I	2	UCL	UCLPW	12.73	91.46	54.30	47.24	7.44						
	2-Wire Unbundled Copper Loop-Designed without manual service inquiry and facility reservation - Zone 3	I	3	UCL	UCLPW	14.30	91.46	54.30	47.24	7.44						
	Order Coordination for Unbundled Copper Loops (per loop)			UCL	UCLMC		8.15	8.15								
	CLEC to CLEC Conversion Charge without outside dispatch (UCL-Des)			UCL	UREWO		97.23	42.48								
4-WIRE COPPER LOOP																
	4-Wire Copper Loop-Designed including manual service inquiry and facility reservation - Zone 1		1	UCL	UCL4S	17.36	135.21	88.05	51.70	9.73						
	4-Wire Copper Loop-Designed including manual service inquiry and facility reservation - Zone 2		2	UCL	UCL4S	20.76	135.21	88.05	51.70	9.73						
	4-Wire Copper Loop-Designed including manual service inquiry and facility reservation - Zone 3		3	UCL	UCL4S	28.21	135.21	88.05	51.70	9.73						
	Order Coordination for Unbundled Copper Loops (per loop)			UCL	UCLMC		8.15	8.15								
	4-Wire Copper Loop-Designed without manual service inquiry and facility reservation - Zone 1	I	1	UCL	UCL4W	17.36	114.21	67.05	51.70	9.73						
	4-Wire Copper Loop-Designed without manual service inquiry and facility reservation - Zone 2	I	2	UCL	UCL4W	20.76	114.21	67.05	51.70	9.73						
	4-Wire Copper Loop-Designed without manual service inquiry and facility reservation - Zone 3	I	3	UCL	UCL4W	28.21	114.21	67.05	51.70	9.73						
	Order Coordination for Unbundled Copper Loops (per loop)			UCL	UCLMC		8.15	8.15								
	CLEC to CLEC conversion Charge without outside dispatch			UCL	UREWO		97.23	42.48								
LOOP MODIFICATION																
	Unbundled Loop Modification, Removal of Load Coils - 2 Wire pair less than or equal to 18k ft. per Unbundled Loop	I		UAL, UHL, UCL, UEQ, ULS, UEA, UEANL, UEPSR, UEPSB	ULM2L		0.00	0.00								
	Unbundled Loop Modification Removal of Load Coils - 4 Wire less than or equal to 18K ft, per Unbundled Loop	I		UHL, UCL, UEA	ULM4L		0.00	0.00								
	Unbundled Loop Modification Removal of Bridged Tap Removal, per unbundled loop	I		UAL, UHL, UCL, UEQ,ULS,UEA, UEANL, UEPSR, UEPSB	ULMBT		32.41	32.41								
SUB-LOOPS																

UNBUNDLED NETWORK ELEMENTS - Alabama														Attachment: 2		Exhibit: A	
CATEGORY		RATE ELEMENTS	Interim	Zone	BCS	USOC	RATES ($)					Svc Order Submitted Elec per LSR	Svc Order Submitted Manually per LSR	Incremental Charge - Manual Svc Order vs. Electronic-1st	Incremental Charge - Manual Svc Order vs. Electronic-Add'l	Incremental Charge - Manual Svc Order vs. Electronic-Disc 1st	Incremental Charge - Manual Svc Order vs. Electronic-Disc Add'l
							Rec	Nonrecurring		Nonrecurring Disconnect		OSS Rates ($)					
								First	Add'l	First	Add'l	SOMEC	SOMAN	SOMAN	SOMAN	SOMAN	SOMAN
	Sub-Loop Distribution																
		Sub-Loop - Per Cross Box Location - CLEC Feeder Facility Set-Up	I		UEANL	USBSA		244.42									
		Sub-Loop - Per Cross Box Location - Per 25 Pair Panel Set-Up	I		UEANL	USBSB		22.64									
		Sub-Loop - Per Building Equipment Room - CLEC Feeder Facility Set-Up	I		UEANL	USBSC		177.45									
		Sub-Loop - Per Building Equipment Room - Per 25 Pair Panel Set-Up	I		UEANL	USBSD		55.15									
		Sub-Loop Distribution Per 2-Wire Analog Voice Grade Loop - Zone 1		1	UEANL	USBN2	11.21	65.80	30.96	45.25	6.70						
		Sub-Loop Distribution Per 2-Wire Analog Voice Grade Loop - Zone 2		2	UEANL	USBN2	11.94	65.80	30.96	45.25	6.70						
		Sub-Loop Distribution Per 2-Wire Analog Voice Grade Loop - Zone 3		3	UEANL	USBN2	16.86	65.80	30.96	45.25	6.70						
		Order Coordination for Unbundled Sub-Loops, per sub-loop pair			UEANL	USBMC		8.15	8.15								
		Sub-Loop Distribution Per 4-Wire Analog Voice Grade Loop - Zone 1		1	UEANL	USBN4	8.46	79.03	44.19	49.71	9.07						
		Sub-Loop Distribution Per 4-Wire Analog Voice Grade Loop - Zone 2		2	UEANL	USBN4	16.67	79.03	44.19	49.71	9.07						
		Sub-Loop Distribution Per 4-Wire Analog Voice Grade Loop - Zone 3		3	UEANL	USBN4	32.57	79.03	44.19	49.71	9.07						
		Order Coordination for Unbundled Sub-Loops, per sub-loop pair			UEANL	USBMC		8.15	8.15								
		Sub-Loop 2-Wire Intrabuilding Network Cable (INC)	I		UEANL	USBR2	2.27	53.01	18.17	45.25	6.70						
		Order Coordination for Unbundled Sub-Loops, per sub-loop pair			UEANL	USBMC		8.15	8.15								
		Sub-Loop 4-Wire Intrabuilding Network Cable (INC)	I		UEANL	USBR4	5.16	59.25	24.41	49.71	9.07						
		Order Coordination for Unbundled Sub-Loops, per sub-loop pair			UEANL	USBMC		8.15	8.15								
		Loop Testing - Basic 1st Half Hour			UEANL	URET1		34.16	34.16								
		Loop Testing - Basic Additional Half Hour			UEANL	URETA		19.85	19.85								
		2 Wire Copper Unbundled Sub-Loop Distribution - Zone 1		1	UEF	UCS2X	6.22	65.80	30.96	45.25	6.70						
		2 Wire Copper Unbundled Sub-Loop Distribution - Zone 2		2	UEF	UCS2X	8.76	65.80	30.96	45.25	6.70						
		2 Wire Copper Unbundled Sub-Loop Distribution - Zone 3		3	UEF	UCS2X	11.27	65.80	30.96	45.25	6.70						
		Order Coordination for Unbundled Sub-Loops, per sub-loop pair			UEF	USBMC		8.15	8.15								
		4 Wire Copper Unbundled Sub-Loop Distribution - Zone 1		1	UEF	UCS4X	6.11	79.03	44.19	49.71	9.07						
		4 Wire Copper Unbundled Sub-Loop Distribution - Zone 2		2	UEF	UCS4X	12.61	79.03	44.19	49.71	9.07						
		4 Wire Copper Unbundled Sub-Loop Distribution - Zone 3		3	UEF	UCS4X	15.36	79.03	44.19	49.71	9.07						
		Order Coordination for Unbundled Sub-Loops, per sub-loop pair			UEF	USBMC		8.15	8.15								
		Loop Testing - Basic 1st Half Hour			UEF	URET1		34.16	34.16								
		Loop Testing - Basic Additional Half Hour			UEF	URETA		19.85	19.85								
	Unbundled Network Terminating Wire (UNTW)																
		Unbundled Network Terminating Wire (UNTW) per Pair			UENTW	UENPP	0.40	30.01									
	Network Interface Device (NID)																
		Network Interface Device (NID) - 1-2 lines			UENTW	UND12		43.23	28.38								
		Network Interface Device (NID) - 1-6 lines			UENTW	UND16		63.97	49.11								
		Network Interface Device Cross Connect - 2 W			UENTW	UNDC2		5.87	5.87								
		Network Interface Device Cross Connect - 4W			UENTW	UNDC4		5.87	5.87								
UNE OTHER, PROVISIONING ONLY - NO RATE																	
		NID - Dispatch and Service Order for NID installation			UENTW	UNDBX	0.00	0.00									
		UNTW Circuit Id Establishment, Provisioning Only - No Rate			UENTW	UENCE	0.00	0.00									
		Unbundled Contract Name, Provisioning Only - No Rate			UEANL,UEF,UEQ,UENTW	UNECN	0.00	0.00									
UNE OTHER, PROVISIONING ONLY - NO RATE																	

UNBUNDLED NETWORK ELEMENTS - Alabama														Attachment: 2		Exhibit: A	
CATEGORY		RATE ELEMENTS	Interim	Zone	BCS	USOC	RATES ($)					Svc Order Submitted Elec per LSR	Svc Order Submitted Manually per LSR	Incremental Charge - Manual Svc Order vs. Electronic-1st	Incremental Charge - Manual Svc Order vs. Electronic-Add'l	Incremental Charge - Manual Svc Order vs. Electronic-Disc 1st	Incremental Charge - Manual Svc Order vs. Electronic-Disc Add'l
							Rec	Nonrecurring		Nonrecurring Disconnect		OSS Rates ($)					
								First	Add'l	First	Add'l	SOMEC	SOMAN	SOMAN	SOMAN	SOMAN	SOMAN
		Unbundled Contact Name, Provisioning Only - no rate			UAL,UCL,UDC,UDL, UDN,UEA,UHL,ULC	UNECN	0.00	0.00									
		Unbundled Sub-Loop Feeder-2 Wire Cross Box Jumper - no rate			UEA,UDN,UCL,UDC	USBFQ	0.00	0.00									
		Unbundled Sub-Loop Feeder-4 Wire Cross Box Jumper - no rate			UEA,USL,UCL,UDL	USBFR	0.00	0.00									
		Unbundled DS1 Loop - Superframe Format Option - no rate			USL	CCOSF	0.00	0.00									
		Unbundled DS1 Loop - Expanded Superframe Format option - no rate			USL	CCOEF	0.00	0.00									
HIGH CAPACITY UNBUNDLED LOCAL LOOP																	
		High Capacity Unbundled Local Loop - DS3 - Per Mile per month			UE3	1L5ND	8.38										
		High Capacity Unbundled Local Loop - DS3 - Facility Termination per month			UE3	UE3PX	308.98	451.52	263.94	119.49	83.58						
		High Capacity Unbundled Local Loop - STS-1 - Per Mile per month			UDLSX	1L5ND	8.38										
		High Capacity Unbundled Local Loop - STS-1 - Facility Termination per month			UDLSX	UDLS1	319.83	451.52	263.94	119.49	83.58						
LOOP MAKE-UP																	
		Loop Makeup - Preordering Without Reservation, per working or spare facility queried (Manual).			UMK	UMKLW		20.00	20.00								
		Loop Makeup - Preordering With Reservation, per spare facility queried (Manual).			UMK	UMKLP		21.00	21.00								
		Loop Makeup--With or Without Reservation, per working or spare facility queried (Mechanized)			UMK	UMKMQ		0.59	0.59								
LINE SHARING AND LINE SPLITTING																	
	NOTE 1: The Line Sharing monthly recurring rates for all installations completed from October 02, 2003 through midnight October 01, 2004 shall be billed as follows:																
	NOTE 1: 10/02/2003 – 10/01/2004: 25% of the rate for an unbundled copper loop non-designed ("UCLND")																
	NOTE 1: 10/02/2004 – 10/01/2005: 50% of the rate for UCLND																
	NOTE 1: 10/02/2005 – 10/01/2006: 75% of the rate for UCLND																
	NOTE 1: Above will apply to USOCS: ULSDT and ULSCT																
	****NOTE 2: The Line Sharing monthly recurring rates with USOCs ULSDC and ULSCC applies only to circuits installed and inservice on or before October 1, 2003**																
	LINE SHARING																
	SPLITTERS-CENTRAL OFFICE BASED																
		Line Sharing Splitter, per System 96 Line Capacity			ULS	ULSDA	155.97	188.79	0.00	177.98	0.00						
		Line Sharing Splitter, per System 24 Line Capacity			ULS	ULSDB	38.99	188.79	0.00	177.98	0.00						
		Line Sharing Splitter, Per System, 8 Line Capacity			ULS	ULSD8	12.73	377.58	0.00	355.96	0.00						
		Line Sharing-DLEC Owned Splitter in CO-CFA activaton-deactivation (per LSOD)			ULS	ULSDG		86.47	0.00	49.84	0.00						
	END USER ORDERING-CENTRAL OFFICE BASED LINE SHARING																
		Line Sharing - per Line Activation (BST Owned splitter) - OBSOLETE see **NOTE 2			ULS	ULSDC	0.61	18.51	10.60	10.01	4.92						
		Line Share Service, TRO per line activation, BST owned splitter - Central Office Located (25% of UCLND) - please see NOTE 1 (E:10/2/2003)			ULS	ULSDT	2.80	18.51	10.60	10.01	4.92						
		Line Share Service, TRO per line activation, BST owned splitter - Central Office Located (50% of UCLND) - please see NOTE 1 (E:10/2/2004)			ULS	ULSDT	5.60	18.51	10.60	10.01	4.92						
		Line Share Service, TRO per line activation, BST owned splitter - Central Office Located (75% of UCLND) - please see NOTE 1 (E:10/2/2005)			ULS	ULSDT	8.40	18.51	10.60	10.01	4.92						
		Line Sharing - per Subsequent Activity per Line Rearrangement(BST Owned Splitter			ULS	ULSDS		16.39	8.19								
		Line Sharing - per Subsequent Activity per Line Rearrangement(DLEC Owned Splitter			ULS	ULSCS		16.39	8.19								
		Line Sharing - per Line Activation (DLEC owned Splitter) - OBSOLETE see **NOTE 2			ULS	ULSCC	0.61	47.44	19.31	20.02	9.83						

UNBUNDLED NETWORK ELEMENTS - Alabama														Attachment: 2		Exhibit: A	
CATEGORY		RATE ELEMENTS	Interim	Zone	BCS	USOC	RATES ($)					Svc Order Submitted Elec per LSR	Svc Order Submitted Manually per LSR	Incremental Charge - Manual Svc Order vs. Electronic-1st	Incremental Charge - Manual Svc Order vs. Electronic-Add'l	Incremental Charge - Manual Svc Order vs. Electronic-Disc 1st	Incremental Charge - Manual Svc Order vs. Electronic-Disc Add'l
							Rec	Nonrecurring		Nonrecurring Disconnect		OSS Rates ($)					
								First	Add'l	First	Add'l	SOMEC	SOMAN	SOMAN	SOMAN	SOMAN	SOMAN
		Line Share Service, TRO per line activation, CLEC owned splitter - Central Office Located (25% of UCLND) - please see NOTE 1 (E:10/2/2003)			ULS	ULSCT	2.80	47.44	19.31	20.02	9.83						
		Line Share Service, TRO per line activation, CLEC owned splitter - Central Office Located (50% of UCLND) - please see NOTE 1 (E:10/2/2004)			ULS	ULSCT	5.60	47.44	19.31	20.02	9.83						
		Line Share Service, TRO per line activation, CLEC owned splitter - Central Office Located (75% of UCLND) - please see NOTE 1 (E:10/2/2005)			ULS	ULSCT	8.40	47.44	19.31	20.02	9.83						
	LINE SPLITTING																
	END USER ORDERING-CENTRAL OFFICE BASED																
		Line Splitting - per line activation DLEC owned splitter			UEPSR UEPSB	UREOS	0.61										
		Line Splitting - per line activation BST owned - physical			UEPSR UEPSB	UREBP	0.61	37.01	21.19	20.02	9.83						
		Line Splitting - per line activation BST owned - virtual			UEPSR UEPSB	UREBV	0.61	37.01	21.19	20.02	9.83						
	MAINTENANCE																
		No Trouble Found - per 1/2 hour increments - Basic						80.00	55.00								
		No Trouble Found - per 1/2 hour increments - Overtime						120.00	82.50								
		No Trouble Found - per 1/2 hour increments - Premium						160.00	110.00								
UNBUNDLED DEDICATED TRANSPORT																	
	INTEROFFICE CHANNEL - DEDICATED TRANSPORT																
		Interoffice Channel - Dedicated Transport - 2-Wire Voice Grade - Per Mile per month			U1TVX	1L5XX	0.008838										
		Interoffice Channel - Dedicated Transport- 2- Wire Voice Grade - Facility Termination			U1TVX	U1TV2	21.13	40.54	27.41	16.74	6.90						
		Interoffice Channel - Dedicated Transpor t- 2-Wire Voice Grade Rev Bat. - Per Mile per month			U1TVX	1L5XX	0.008838										
		Interoffice Channel - Dedicated Transport- 2- Wire VG Rev Bat. - Facility Termination			U1TVX	U1TR2	21.13	40.54	27.41	16.74	6.90						
		Interoffice Channel - Dedicated Transport - 4-Wire Voice Grade - Per Mile per month			U1TVX	1L5XX	0.008838										
		Interoffice Channel - Dedicated Transport - 4- Wire Voice Grade - Facility Termination			U1TVX	U1TV4	18.73	40.54	27.41	16.74	6.90						
		Interoffice Channel - Dedicated Transport - 56 kbps - per mile per month			U1TDX	1L5XX	0.008838										
		Interoffice Channel - Dedicated Transport - 56 kbps - Facility Termination			U1TDX	U1TD5	15.12	40.54	27.41	16.74	6.90						
		Interoffice Channel - Dedicated Transport - 64 kbps - per mile per month			U1TDX	1L5XX	0.008838										
		Interoffice Channel - Dedicated Transport - 64 kbps - Facility Termination			U1TDX	U1TD6	15.12	40.54	27.41	16.74	6.90						
		Interoffice Channel - Dedicated Channel - DS1 - Per Mile per month			U1TD1	1L5XX	0.18										
		Interoffice Channel - Dedicated Tranport - DS1 - Facility Termination			U1TD1	U1TF1	60.16	89.27	81.81	16.35	14.44						
		Interoffice Channel - Dedicated Transport - DS3 - Per Mile per month			U1TD3	1L5XX	4.09										
		Interoffice Channel - Dedicated Transport - DS3 - Facility Termination per month			U1TD3	U1TF3	703.52	278.75	162.76	60.20	28.46						
		Interoffice Channel - Dedicated Transport - STS-1 - Per Mile per month			U1TS1	1L5XX	4.09										
		Interoffice Channel - Dedicated Transport - STS-1 - Facility Termination			U1TS1	U1TFS	701.37	278.75	162.76	60.20	28.46						
DARK FIBER																	
		Dark Fiber, Four Fiber Strands, Per Route Mile or Fraction Thereof per month - Interoffice Channel			UDF, UDFCX	1L5DF	23.29										
		NRC Dark Fiber - Interoffice Channel			UDF, UDFCX	UDF14		639.09	137.87	317.06	197.66						
		Dark Fiber, Four Fiber Strands, Per Route Mile or Fraction Thereof per month - Local Loop			UDF, UDFCX	1L5DL	60.32										
		NRC Dark Fiber - Local Loop			UDF, UDFCX	UDFL4		639.09	137.87	317.06	197.66						

UNBUNDLED NETWORK ELEMENTS - Alabama														Attachment: 2		Exhibit: A	
CATEGORY		RATE ELEMENTS	Interim	Zone	BCS	USOC	RATES ($)					Svc Order Submitted Elec per LSR	Svc Order Submitted Manually per LSR	Incremental Charge - Manual Svc Order vs. Electronic-1st	Incremental Charge - Manual Svc Order vs. Electronic-Add'l	Incremental Charge - Manual Svc Order vs. Electronic-Disc 1st	Incremental Charge - Manual Svc Order vs. Electronic-Disc Add'l
							Rec	Nonrecurring		Nonrecurring Disconnect		OSS Rates ($)					
								First	Add'l	First	Add'l	SOMEC	SOMAN	SOMAN	SOMAN	SOMAN	SOMAN
8XX ACCESS TEN DIGIT SCREENING																	
		8XX Access Ten Digit Screening, Per Call			OHD		0.00056										
		8XX Access Ten Digit Screening, Reservation Charge Per 8XX Number Reserved			OHD	N8R1X		2.58	0.44								
		8XX Access Ten Digit Screening, Per 8XX No. Established W/O POTS Translations			OHD			5.94	0.81	4.57	0.54						
		8XX Access Ten Digit Screening, Per 8XX No. Established With POTS Translations			OHD	N8FTX		5.94	0.81	4.57	0.54						
		8XX Access Ten Digit Screening, Customized Area of Service Per 8XX Number			OHD	N8FCX		2.58	1.29								
		8XX Access Ten Digit Screening, Multiple InterLATA CXR Routing Per CXR Requested Per 8XX No.			OHD	N8FMX		3.02	1.73								
		8XX Access Ten Digit Screening, Change Charge Per Request			OHD	N8FAX		3.02	0.44								
		8XX Access Ten Digit Screening, Call Handling and Destination Features			OHD	N8FDX		2.58									
		8XX Access Ten Digit Screening, w/ 8FL No. Delivery			OHD		0.000565										
		8XX Access Ten Digit Screening, w/ POTS No. Delivery			OHD		0.000565										
LINE INFORMATION DATA BASE ACCESS (LIDB)																	
		LIDB Common Transport Per Query			OQT		0.00002										
		LIDB Validation Per Query			OQU		0.012002										
		LIDB Originating Point Code Establishment or Change			OQT, OQU	NRBPX		34.32		42.08							
SIGNALING (CCS7)																	
		CCS7 Signaling Connection, Per 56Kbps Facility					15.46	35.53	35.53	16.44	16.44						
		CCS7 Signaling Termination, Per STP Port			UDB	PT8SX	130.83										
		CCS7 Signaling Usage, Per Call Setup Message					0.0000142										
		CCS7 Signaling Usage, Per TCAP Message			UDB		0.0000569										
		CCS7 Signaling Connection, Per link (A link)			UDB	TPP++	15.46	35.53	35.53	16.44	16.44						
		CCS7 Signaling Connection, Per link (B link) (also known as D link)			UDB	TPP++	15.46	35.53	35.53	16.44	16.44						
		CCS7 Signaling Usage, Per ISUP Message			UDB		0.0000142										
		CCS7 Signaling Usage Surrogate, per link per LATA			UDB	STU56	650.33										
		CCS7 Signaling Point Code, per Originating Point Code Establishment or Change, per STP affected			UDB	CCAPO		29.01	29.01	35.57	35.57						
E911 SERVICE																	
		Local Channel - Dedicated - 2-wr Voice Grade					13.97	193.10	33.17	36.64	3.20						
		Interoffice Transport - Dedicated - 2-wr Voice Grade Per Mile					0.008838										
		Interoffice Transport - Dedicated - 2-wr Voice Grade Per Facility Termination					21.13	40.54	27.41	16.74	6.90						
		Local Channel - Dedicated - DS1 - Zone 1					35.76	177.47	153.72	22.19	15.26						
		Local Channel - Dedicated - DS1 - Zone 2					49.98	177.47	153.72	22.19	15.26						
		Local Channel - Dedicated - DS1 - Zone 3					107.63	177.47	153.72	22.19	15.26						
		Interoffice Transport - Dedicated - DS1 Per Mile					0.18										
		Interoffice Transport - Dedicated - DS1 Per Facility Termination					60.16	89.27	81.81	16.35	14.44						
CALLING NAME (CNAM) SERVICE																	
		CNAM For DB Owners - Service Establishment			OQV			22.95		21.11							
		CNAM For Non DB Owners - Service Establishment			OQV			22.95		21.11							
		CNAM For DB Owners - Service Provisioning With Point Code Establishment			OQV			990.88	732.84	268.93	197.74						
		CNAM For Non DB Owners - Service Provisioning With Point Code Establishment			OQV			342.33	245.14	275.25	197.74						
		CNAM for DB Owners, Per Query			OQV		0.000902										
		CNAM for Non DB Owners, Per Query			OQV		0.000902										
SELECTIVE ROUTING																	
		Selective Routing Per Unique Line Class Code Per Request Per Switch						84.70	84.70	14.11	14.11						
VIRTUAL COLLOCATION																	
		Virtual Collocation-2 Wire Cross Connects (Loop) for Line Splitting			UEPSR UEPSB	VE1LS	0.03	12.30	11.80	6.03	5.44						

UNBUNDLED NETWORK ELEMENTS - Alabama														Attachment: 2		Exhibit: A	
CATEGORY		RATE ELEMENTS	Interim	Zone	BCS	USOC	RATES ($)					Svc Order Submitted Elec per LSR	Svc Order Submitted Manually per LSR	Incremental Charge - Manual Svc Order vs. Electronic-1st	Incremental Charge - Manual Svc Order vs. Electronic-Add'l	Incremental Charge - Manual Svc Order vs. Electronic-Disc 1st	Incremental Charge - Manual Svc Order vs. Electronic-Disc Add'l
							Rec	Nonrecurring		Nonrecurring Disconnect		OSS Rates ($)					
								First	Add'l	First	Add'l	SOMEC	SOMAN	SOMAN	SOMAN	SOMAN	SOMAN
PHYSICAL COLLOCATION																	
		Physical Collocation-2 Wire Cross Connects (Loop) for Line Splitting			UEPSR UEPSB	PE1LS	0.03	12.30	11.80	6.03	5.44						
AIN SELECTIVE CARRIER ROUTING																	
		Regional Service Establishment			SRC	SRCEC		101,098.91		8,590.70							
		End Office Establishment			SRC	SRCEO		169.88	169.88	1.70	1.70						
		Query NRC, per query			SRC		0.002749										
AIN - BELLSOUTH AIN SMS ACCESS SERVICE																	
		AIN SMS Access Service - Service Establishment, Per State, Initial Setup			A1N	CAMSE		39.44	39.44	40.69	40.69						
		AIN SMS Access Service - Port Connection - Dial/Shared Access			A1N	CAMDP		7.83	7.83	9.09	9.09						
		AIN SMS Access Service - Port Connection - ISDN Access			A1N	CAM1P		7.83	7.83	9.09	9.09						
		AIN SMS Access Service - User Identification Codes - Per User ID Code			A1N	CAMAU		35.00	35.00	27.06	27.06						
		AIN SMS Access Service - Security Card, Per User ID Code, Initial or Replacement			A1N	CAMRC		41.88	41.88	11.71	11.71						
		AIN SMS Access Service - Storage, Per Unit (100 Kilobytes)					0.002188										
		AIN SMS Access Service - Session, Per Minute					0.59										
		AIN SMS Access Service - Company Performed Session, Per Minute					0.73										
AIN - BELLSOUTH AIN TOOLKIT SERVICE																	
		AIN Toolkit Service - Service Establishment Charge, Per State, Initial Setup			CAM	BAPSC		39.44	39.44	40.69	40.69						
		AIN Toolkit Service - Training Session, Per Customer				BAPVX		4,202.17	4,202.17								
		AIN Toolkit Service - Trigger Access Charge, Per Trigger, Per DN, Term. Attempt				BAPTT		7.83	7.83	9.09	9.09						
		AIN Toolkit Service - Trigger Access Charge, Per Trigger, Per DN, Off-Hook Delay				BAPTD		7.83	7.83	9.09	9.09						
		AIN Toolkit Service - Trigger Access Charge, Per Trigger, Per DN, Off-Hook Immediate				BAPTM		7.83	7.83	9.09	9.09						
		AIN Toolkit Service - Trigger Access Charge, Per Trigger, Per DN, 10-Digit PODP				BAPTO		34.47	34.47	14.36	14.36						
		AIN Toolkit Service - Trigger Access Charge, Per Trigger, Per DN, CDP				BAPTC		34.47	34.47	14.36	14.36						
		AIN Toolkit Service - Trigger Access Charge, Per Trigger, Per DN, Feature Code				BAPTF		34.47	34.47	14.36	14.36						
		AIN Toolkit Service - Query Charge, Per Query					0.05										
		AIN Toolkit Service - Type 1 Node Charge, Per AIN Toolkit Subscription, Per Node, Per Query					0.00582										
		AIN Toolkit Service - SCP Storage Charge, Per SMS Access Account, Per 100 Kilobytes					0.05										
		AIN Toolkit Service - Monthly report - Per AIN Toolkit Service Subscription			CAM	BAPMS	10.17	7.83	7.83	5.50	5.50						
		AIN Toolkit Service - Special Study - Per AIN Toolkit Service Subscription			CAM	BAPLS	2.87	8.66	8.66								
		AIN Toolkit Service - Call Event Report - Per AIN Toolkit Service Subscription			CAM	BAPDS	7.39	7.83	7.83	5.50	5.50						
		AIN Toolkit Service - Call Event Special Study - Per AIN Toolkit Service Subscription			CAM	BAPES	0.10	8.66	8.66								
ENHANCED EXTENDED LINK (EELs)																	
	NOTE: The monthly recurring and non-recurring charges below will apply and the Switch-As-Is Charge will not apply for UNE combinations provisioned as ' Ordinarily Combined' Network Elements.																
	NOTE: The monthly recurring and the Switch-As-Is Charge and not the non-recurring charges below will apply for UNE combinations provisioned as ' Currently Combined' Network Elements.																
	EXTENTED 2-WIRE VOICE GRADE EXTENDED LOOP WITH DEDICATED DS1 INTEROFFICE TRANSPORT																
		First 2-Wire VG Loop (SL2) in Combination - Zone 1		1	UNCVX	UEAL2	14.38	88.00	55.00	47.24	7.44						
		First 2-Wire VG Loop (SL2) in Combination - Zone 2		2	UNCVX	UEAL2	22.85	88.00	55.00	47.24	7.44						
		First 2-Wire VG Loop (SL2) in Combination - Zone 3		3	UNCVX	UEAL2	36.14	88.00	55.00	47.24	7.44						
		Interoffice Transport - Dedicated - DS1 combination - Per Mile per month			UNC1X	1L5XX	0.18										

CATEGORY		RATE ELEMENTS	Interim	Zone	BCS	USOC	RATES ($)					Svc Order Submitted Elec per LSR	Svc Order Submitted Manually per LSR	Attachment: 2 Incremental Charge - Manual Svc Order vs. Electronic-1st	Attachment: 2 Incremental Charge - Manual Svc Order vs. Electronic-Add'l	Exhibit: A Incremental Charge - Manual Svc Order vs. Electronic-Disc 1st	Exhibit: A Incremental Charge - Manual Svc Order vs. Electronic-Disc Add'l
							Rec	Nonrecurring		Nonrecurring Disconnect		OSS Rates ($)					
								First	Add'l	First	Add'l	SOMEC	SOMAN	SOMAN	SOMAN	SOMAN	SOMAN
		Interoffice Transport - Dedicated - DS1 combination - Facility Termination per month			UNC1X	U1TF1	60.16	89.27	81.81	16.35	14.44						
		1/0 Channelization System in combination Per Month			UNC1X	MQ1	101.06	91.04	62.57	10.54	9.79						
		Voice Grade COCI - Per Month			UNCVX	1D1VG	0.53	6.58	4.72								
		Each Additional 2-Wire VG Loop (SL 2) in Combination - Zone 1		1	UNCVX	UEAL2	14.38	88.00	55.00	47.24	7.44						
		Each Additional 2-Wire VG Loop (SL 2) in Combination - Zone 2		2	UNCVX	UEAL2	22.85	88.00	55.00	47.24	7.44						
		Each Additional 2-Wire VG Loop (SL 2) in Combination - Zone 3		3	UNCVX	UEAL2	36.14	88.00	55.00	47.24	7.44						
		Voice Grade COCI - Per Month			UNCVX	1D1VG	0.53	6.58	4.72								
		Nonrecurring Currently Combined Network Elements Switch -As-Is Charge			UNC1X	UNCCC		5.59	5.59	6.98	6.98						
	EXTENDED 4-WIRE VOICE GRADE EXTENDED LOOP WITH DEDICATED DS1 INTEROFFICE TRANSPORT																
		First 4-Wire Analog Voice Grade Loop in Combination - Zone 1		1	UNCVX	UEAL4	25.34	131.97	94.51	59.14	14.50						
		First 4-Wire Analog Voice Grade Loop in Combination - Zone 2		2	UNCVX	UEAL4	38.58	131.97	94.51	59.14	14.50						
		First 4-Wire Analog Voice Grade Loop in Combination - Zone 3		3	UNCVX	UEAL4	60.02	131.97	94.51	59.14	14.50						
		Interoffice Transport - Dedicated - DS1 combination - Per Mile Per Month			UNC1X	1L5XX	0.18										
		Interoffice Transport - Dedicated - DS1 - Facility Termination Per Month			UNC1X	U1TF1	60.16	89.27	81.81	16.35	14.44						
		1/0 Channel System in combination Per Month			UNC1X	MQ1	101.06	91.04	62.57	10.54	9.79						
		Voice Grade COCI in combination - per month			UNCVX	1D1VG	0.53	6.58	4.72								
		Additional 4-Wire Analog Voice Grade Loop in same DS1 Interoffice Transport Combination - Zone 1		1	UNCVX	UEAL4	25.34	131.97	94.51	59.14	14.50						
		Additional 4-Wire Analog Voice Grade Loop in same DS1 Interoffice Transport Combination - Zone 2		2	UNCVX	UEAL4	38.58	131.97	94.51	59.14	14.50						
		Additional 4-Wire Analog Voice Grade Loop in same DS1 Interoffice Transport Combination - Zone 3		3	UNCVX	UEAL4	60.02	131.97	94.51	59.14	14.50						
		Additional Voice Grade COCI in combination - per month			UNCVX	1D1VG	0.53	6.58	4.72								
		Nonrecurring Currently Combined Network Elements Switch -As-Is Charge			UNC1X	UNCCC		5.59	5.59	6.98	6.98						
	EXTENDED 4-WIRE 56 KBPS EXTENDED DIGITAL LOOP WITH DEDICATED DS1 INTEROFFICE TRANSPORT																
		First 4-Wire 56Kbps Digital Grade Loop in Combination - Zone 1		1	UNCDX	UDL56	26.09	126.27	88.80	59.14	14.50						
		First 4-Wire 56Kbps Digital Grade Loop in Combination - Zone 2		2	UNCDX	UDL56	35.95	126.27	88.80	59.14	14.50						
		First 4-Wire 56Kbps Digital Grade Loop in Combination - Zone 3		3	UNCDX	UDL56	37.88	126.27	88.80	59.14	14.50						
		Interoffice Transport - Dedicated - DS1 combination - Per Mile Per Month			UNC1X	1L5XX	0.18										
		Interoffice Transport - Dedicated - DS1 - combination Facility Termination Per Month			UNC1X	U1TF1	60.16	89.27	81.81	16.35	14.44						
		1/0 Channel System in combination Per Month			UNC1X	MQ1	101.06	91.04	62.57	10.54	9.79						
		OCU-DP COCI (data) per month (2.4-64kbs)			UNCDX	1D1DD	1.12	6.58	4.72								
		Additional 4-Wire 56Kbps Digital Grade Loop in same DS1 Interoffice Transport Combination - Zone 1		1	UNCDX	UDL56	26.09	126.27	88.80	59.14	14.50						
		Additional 4-Wire 56Kbps Digital Grade Loop in same DS1 Interoffice Transport Combination - Zone 2		2	UNCDX	UDL56	35.95	126.27	88.80	59.14	14.50						
		Additional 4-Wire 56Kbps Digital Grade Loop in same DS1 Interoffice Transport Combination - Zone 3		3	UNCDX	UDL56	37.88	126.27	88.80	59.14	14.50						
		Additional OCU-DP COCI (data) - in combination per month (2.4-64kbs)			UNCDX	1D1DD	1.12	6.58	4.72								
		Nonrecurring Currently Combined Network Elements Switch -As-Is Charge			UNC1X	UNCCC		5.59	5.59	6.98	6.98						
	EXTENDED 4-WIRE 64 KBPS EXTENDED DIGITAL LOOP WITH DEDICATED DS1 INTEROFFICE TRANSPORT																

CATEGORY	RATE ELEMENTS	Interim	Zone	BCS	USOC	RATES ($)					Svc Order Submitted Elec per LSR	Svc Order Submitted Manually per LSR	Attachment: 2 Incremental Charge - Manual Svc Order vs. Electronic-1st	Attachment: 2 Incremental Charge - Manual Svc Order vs. Electronic-Add'l	Exhibit: A Incremental Charge - Manual Svc Order vs. Electronic-Disc 1st	Exhibit: A Incremental Charge - Manual Svc Order vs. Electronic-Disc Add'l
						Rec	Nonrecurring		Nonrecurring Disconnect		OSS Rates ($)					
							First	Add'l	First	Add'l	SOMEC	SOMAN	SOMAN	SOMAN	SOMAN	SOMAN
	First 4-Wire 64Kbps Digital Grade Loop in Combination - Zone 1		1	UNCDX	UDL64	26.09	126.27	88.80	59.14	14.50						
	First 4-Wire 64Kbps Digital Grade Loop in Combination - Zone 2		2	UNCDX	UDL64	35.95	126.27	88.80	59.14	14.50						
	First 4-Wire 64Kbps Digital Grade Loop in Combination - Zone 3		3	UNCDX	UDL64	37.88	126.27	88.80	59.14	14.50						
	Interoffice Transport - Dedicated - DS1 combination - Per Mile Per Month			UNC1X	1L5XX	0.18										
	interoffice Transport - Dedicated - DS1 combination - Facility Termination Per Month			UNC1X	U1TF1	60.16	89.27	81.81	16.35	14.44						
	1/0 Channel System in combination Per Month			UNC1X	MQ1	101.06	91.04	62.57	10.54	9.79						
	OCU-DP COCI (data) - in combination - per month (2.4-64kbs)			UNCDX	1D1DD	1.12	6.58	4.72								
	Additional 4-Wire 64Kbps Digital Grade Loop in same DS1 Interoffice Transport Combination - Zone 1		1	UNCDX	UDL64	26.09	126.27	88.80	59.14	14.50						
	Additional 4-Wire 64Kbps Digital Grade Loop in same DS1 Interoffice Transport Combination - Zone 2		2	UNCDX	UDL64	35.95	126.27	88.80	59.14	14.50						
	Additional 4-Wire 64Kbps Digital Grade Loop in same DS1 Interoffice Transport Combination - Zone 3		3	UNCDX	UDL64	37.88	126.27	88.80	59.14	14.50						
	Additional OCU-DP COCI (data) - in combination - per month (2.4-64kbs)			UNCDX	1D1DD	1.12	6.58	4.72								
	Nonrecurring Currently Combined Network Elements Switch -As-Is Charge			UNC1X	UNCCC		5.59	5.59	6.98	6.98						
	EXTENDED 4-WIRE DS1 DIGITAL EXTENDED LOOP WITH DEDICATED DS1 INTEROFFICE TRANSPORT															
	4-Wire DS1 Digital Loop in Combination - Zone 1		1	UNC1X	USLXX	82.55	252.47	157.54	44.70	11.71						
	4-Wire DS1 Digital Loop in Combination - Zone 2		2	UNC1X	USLXX	154.18	252.47	157.54	44.70	11.71						
	4-Wire DS1 Digital Loop in Combination - Zone 3		3	UNC1X	USLXX	314.52	252.47	157.54	44.70	11.71						
	Interoffice Transport - Dedicated - DS1 combination - Per Mile Per Month			UNC1X	1L5XX	0.18										
	Interoffice Transport - Dedicated - DS1 combination - Facility Termination Per Month			UNC1X	U1TF1	60.16	89.27	81.81	16.35	14.44						
	Nonrecurring Currently Combined Network Elements Switch -As-Is Charge			UNC1X	UNCCC		5.59	5.59	6.98	6.98						
	EXTENDED 4-WIRE DS1 DIGITAL EXTENDED LOOP WITH DEDICATED DS3 INTEROFFICE TRANSPORT															
	First DS1Loop in Combination - Zone 1		1	UNC1X	USLXX	82.55	252.47	157.54	44.70	11.71						
	First DS1Loop in Combination - Zone 2		2	UNC1X	USLXX	154.18	252.47	157.54	44.70	11.71						
	First DS1Loop in Combination - Zone 3		3	UNC1X	USLXX	314.52	252.47	157.54	44.70	11.71						
	Interoffice Transport - Dedicated - DS3 combination - Per Mile Per Month			UNC3X	1L5XX	4.09										
	Interoffice Transport - Dedicated - DS3 - Facility Termination per month			UNC3X	U1TF3	703.52	278.75	162.76	60.20	58.46						
	3/1 Channel System in combination per month			UNC3X	MQ3	166.13	178.14	93.97	33.26	31.83						
	DS1 COCI in combination per month			UNC1X	UC1D1	12.70	6.58	4.72								
	Additional DS1Loop in DS3 Interoffice Transport Combination - Zone 1		1	UNC1X	USLXX	82.55	252.47	157.54	44.70	11.71						
	Additional DS1Loop in DS3 Interoffice Transport Combination - Zone 2		2	UNC1X	USLXX	154.18	252.47	157.54	44.70	11.71						
	Additional DS1Loop in DS3 Interoffice Transport Combination - Zone 3		3	UNC1X	USLXX	314.52	252.47	157.54	44.70	11.71						
	Additoinal DS1 COCI in combination per month			UNC1X	UC1D1	12.70	6.58	4.72								
	Nonrecurring Currently Combined Network Elements Switch -As-Is Charge			UNC3X	UNCCC		5.59	5.59	6.98	6.98						
	EXTENDED 2-WIRE VOICE GRADE EXTENDED LOOP/ 2 WIRE VOICE GRADE INTEROFFICE TRANSPORT															
	2-WireVG Loop in combination - Zone 1		1	UNCVX	UEAL2	14.38	88.00	55.00	47.24	7.44						
	2-WireVG Loop in combination - Zone 2		2	UNCVX	UEAL2	22.85	88.00	55.00	47.24	7.44						
	2-WireVG Loop in combination - Zone 3		3	UNCVX	UEAL2	36.14	88.00	55.00	47.24	7.44						
	Interoffice Transport - 2-wire VG - Dedicated- Per Mile Per Month			UNCVX	1L5XX	0.008838										
	Interoffice Transport - 2-wire VG - Dedicated - Facility Termination per month			UNCVX	U1TV2	21.13	40.54	27.41	16.74	6.90						

CATEGORY	RATE ELEMENTS	Interim	Zone	BCS	USOC	RATES ($)					Svc Order Submitted Elec per LSR	Svc Order Submitted Manually per LSR	Attachment: 2 Incremental Charge - Manual Svc Order vs. Electronic-1st	Attachment: 2 Incremental Charge - Manual Svc Order vs. Electronic-Add'l	Exhibit: A Incremental Charge - Manual Svc Order vs. Electronic-Disc 1st	Exhibit: A Incremental Charge - Manual Svc Order vs. Electronic-Disc Add'l
						Rec	Nonrecurring		Nonrecurring Disconnect		OSS Rates ($)					
							First	Add'l	First	Add'l	SOMEC	SOMAN	SOMAN	SOMAN	SOMAN	SOMAN
	Nonrecurring Currently Combined Network Elements Switch -As-Is Charge			UNCVX	UNCCC		5.59	5.59	6.98	6.98						
	EXTENDED 4-WIRE VOICE GRADE EXTENDED LOOP/ 4 WIRE VOICE GRADE INTEROFFICE TRANSPORT															
	4-WireVG Loop in combination - Zone 1		1	UNCVX	UEAL4	25.34	131.97	94.51	59.14	14.50						
	4-WireVG Loop in combination - Zone 2		2	UNCVX	UEAL4	38.58	131.97	94.51	59.14	14.50						
	4-WireVG Loop in combination - Zone 3		3	UNCVX	UEAL4	60.02	131.97	94.51	59.14	14.50						
	Interoffice Transport - 4-wire VG - Dedicated - Per Mile Per Month			UNCVX	1L5XX	0.008838										
	Interoffice Transport - 4-wire VG - Dedicated - Facility Termination per month			UNCVX	U1TV4	18.73	40.54	27.41	16.74	6.90						
	Nonrecurring Currently Combined Network Elements Switch -As-Is Charge			UNCVX	UNCCC		5.59	5.59	6.98	6.98						
	EXTENDED DS3 DIGITAL EXTENDED LOOP WITH DEDICATED DS3 INTEROFFICE TRANSPORT															
	DS3 Local Loop in combination - per mile per month			UNC3X	1L5ND	8.38										
	DS3 Local Loop in combination - Facility Termination per month			UNC3X	UE3PX	308.98	451.52	263.94	119.49	83.58						
	Interoffice Transport - Dedicated - DS3 - Per Mile per month			UNC3X	1L5XX	4.09										
	Interoffice Transport - Dedicated - DS3 combination - Facility Termination per per month			UNC3X	U1TF3	703.52	278.75	162.76	60.20	58.46						
	Nonrecurring Currently Combined Network Elements Switch -As-Is Charge			UNC3X	UNCCC		5.59	5.59	6.98	6.98						
	EXTENDED STS-1 DIGITAL EXTENDED LOOP WITH DEDICATED STS-1 INTEROFFICE TRANSPORT															
	STS-1 Local Lolp in combination - per mile per month			UNCSX	1L5ND	8.38										
	STS-1 Local Loop in combination - Facility Termination per month			UNCSX	UDLS1	319.83	451.52	263.94	119.49	83.58						
	Interoffice Transport - Dedicated - STS-1 combination - per mile per month			UNCSX	1L5XX	4.09										
	Interoffice Transport - Dedicated - STS-1 combination - Facility Termination per month			UNCSX	U1TFS	701.37	278.75	162.76	60.20	58.46						
	Nonrecurring Currently Combined Network Elements Switch -As-Is Charge			UNCSX	UNCCC		5.59	5.59	6.98	6.98						
	EXTENDED 2-WIRE ISDN EXTENDED LOOP WITH DS1 INTEROFFICE TRANSPORT															
	First 2-Wire ISDN Loop in Combination - Zone 1		1	UNCNX	U1L2X	21.88	117.24	79.77	52.88	10.54						
	First 2-Wire ISDN Loop in Combination - Zone 2		2	UNCNX	U1L2X	32.85	117.24	79.77	52.88	10.54						
	First 2-Wire ISDN Loop in Combination - Zone 3		3	UNCNX	U1L2X	48.55	117.24	79.77	52.88	10.54						
	Interoffice Transport - Dedicated - DS1 combination - per mile per month			UNC1X	1L5XX	0.18										
	Interoffice Transport - Dedicated - DS1 combination - Facility Termination per month			UNC1X	U1TF1	60.16	89.27	81.81	16.35	14.44						
	1/0 Channel System in combination - per month			UNC1X	MQ1	101.06	91.04	62.57	10.54	9.79						
	2-wire ISDN COCI (BRITE) - in combination - per month			UNCNX	UC1CA	2.41	6.58	4.72								
	Additional 2-wire ISDN Loop in same DS1Interoffice Transport Combination - Zone 1		1	UNCNX	U1L2X	21.88	117.24	79.77	52.88	10.54						
	Additional 2-wire ISDN Loop in same DS1Interoffice Transport Combination - Zone 2		2	UNCNX	U1L2X	32.85	117.24	79.77	52.88	10.54						
	Additional 2-wire ISDN Loop in same DS1Interoffice Transport Combination - Zone 3		3	UNCNX	U1L2X	48.55	117.24	79.77	52.88	10.54						
	Additional 2-wire ISDN COCI (BRITE) - in combination- per month			UNCNX	UC1CA	2.41	6.58	4.72								
	Nonrecurring Currently Combined Network Elements Switch -As-Is Charge			UNC1X	UNCCC		5.59	5.59	6.98	6.98						
	EXTENDED 4-WIRE DS1 DIGITAL EXTENDED LOOP WITH DEDICATED STS-1 INTEROFFICE TRANSPORT															
	First DS1 Loop Combination - Zone 1		1	UNC1X	USLXX	82.55	252.47	157.54	44.70	11.71						
	First DS1 Loop Combination - Zone 2		2	UNC1X	USLXX	154.18	252.47	157.54	44.70	11.71						
	First DS1 Loop Combination - Zone 3		3	UNC1X	USLXX	314.52	252.47	157.54	44.70	11.71						
	Interoffice Transport - Dedicated - STS-1 combination - Per Mile Per Month			UNCSX	1L5XX	4.09										
	Interoffice Transport - Dedicated - STS-1 combination - Facility Termination per month			UNCSX	U1TFS	701.37	278.75	162.76	60.20	58.46						

UNBUNDLED NETWORK ELEMENTS - Alabama

CATEGORY	RATE ELEMENTS	Interim	Zone	BCS	USOC	RATES ($)					Svc Order Submitted Elec per LSR	Svc Order Submitted Manually per LSR	Attachment: 2 Incremental Charge - Manual Svc Order vs. Electronic-1st	Attachment: 2 Incremental Charge - Manual Svc Order vs. Electronic-Add'l	Exhibit: A Incremental Charge - Manual Svc Order vs. Electronic-Disc 1st	Exhibit: A Incremental Charge - Manual Svc Order vs. Electronic-Disc Add'l
						Rec	Nonrecurring		Nonrecurring Disconnect		OSS Rates ($)					
							First	Add'l	First	Add'l	SOMEC	SOMAN	SOMAN	SOMAN	SOMAN	SOMAN
	3/1 Channel System in combination per month			UNCSX	MQ3	166.13	178.14	93.97	33.26	31.83						
	DS1 COCI in combination per month			UNC1X	UC1D1	12.70	6.58	4.72								
	Additional DS1Loop in the same STS-1 Interoffice Transport Combination - Zone 1		1	UNC1X	USLXX	82.55	252.47	157.54	44.70	11.71						
	Additional DS1Loop in the same STS-1 Interoffice Transport Combination - Zone 2		2	UNC1X	USLXX	154.18	252.47	157.54	44.70	11.71						
	Additional DS1Loop in the same STS-1 Interoffice Transport Combination - Zone 3		3	UNC1X	USLXX	314.52	252.47	157.54	44.70	11.71						
	DS1 COCI in combination per month			UNC1X	UC1D1	12.70	6.58	4.72								
	Nonrecurring Currently Combined Network Elements Switch -As-Is Charge			UNCSX	UNCCC		5.59	5.59	6.98	6.98						
EXTENDED 4-WIRE 56 KBPS DIGITAL EXTENDED LOOP WITH 56 KBPS INTEROFFICE TRANSPORT																
	4-wire 56 kbps Local Loop in combination - Zone 1		1	UNCDX	UDL56	26.09	126.27	88.80	59.14	14.50						
	4-wire 56 kbps Local Loop in combination - Zone 2		2	UNCDX	UDL56	35.95	126.27	88.80	59.14	14.50						
	4-wire 56 kbps Local Loop in combination - Zone 3		3	UNCDX	UDL56	37.88	126.27	88.80	59.14	14.50						
	Interoffice Transport - Dedicated - 4-wire 56 kbps combination - Per Mile per month			UNCDX	1L5XX	0.008838										
	Interoffice Transport - Dedicated - 4-wire 56 kbps combination - Facility Termination per month			UNCDX	U1TD5	15.12	40.54	27.41	16.74	6.90						
	Nonrecurring Currently Combined Network Elements Switch -As-Is Charge			UNCDX	UNCCC		5.59	5.59	6.98	6.98						
EXTENDED 4-WIRE 64 KBPS DIGITAL EXTENDED LOOP WITH 64 KBPS INTEROFFICE TRANSPORT																
	4-wire 64 kbps Lcoal Loop in Combination - Zone 1		1	UNCDX	UDL64	26.09	126.27	88.80	59.14	14.50						
	4-wire 64 kbps Lcoal Loop in Combination - Zone 2		2	UNCDX	UDL64	35.95	126.27	88.80	59.14	14.50						
	4-wire 64 kbps Lcoal Loop in Combination - Zone 3		3	UNCDX	UDL64	37.88	126.27	88.80	59.14	14.50						
	Interoffice Transport - Dedicated - 4-wire 64 kbps combination - Per Mile per month			UNCDX	1L5XX	0.008838										
	Interoffice Transport - Dedicated - 4-wire 64 kbps combination - Facility Termination per month			UNCDX	U1TD6	15.12	40.54	27.41	16.74	6.90						
	Nonrecurring Currently Combined Network Elements Switch -As-Is Charge			UNCDX	UNCCC		5.59	5.59	6.98	6.98						
EXTENDED 2-WIRE VOICE GRADE LOOP WITH DS1 INTEROFFICE TRANSPORT w/ 3/1 MUX																
	First 2-wire VG Loop (SL2) in Combination - Zone 1		1	UNCVX	UEAL2	14.38	88.00	55.00	47.24	7.44						
	First 2-wire VG Loop (SL2) in Combination - Zone 2		2	UNCVX	UEAL2	22.85	88.00	55.00	47.24	7.44						
	First 2-wire VG Loop (SL2) in Combination - Zone 3		3	UNCVX	UEAL2	36.14	88.00	55.00	47.24	7.44						
	First Interoffice Transport - Dedicated - DS1 combination - Per Mile			UNC1X	1L5XX	0.18										
	First Interoffice Transport - Dedicated - DS1 combination - Facility Termination per month			UNC1X	U1TF1	60.16	89.27	81.81	16.35	14.44						
	Per each DS1 Channelization System Per Month			UNC1X	MQ1	101.06	91.04	62.57	10.54	9.79						
	Per each Voice Grade COCI - Per Month per month			UNCVX	1D1VG	0.53	6.58	4.72								
	3/1 Channel System in combination per month			UNC3X	MQ3	166.13	178.14	93.97	33.26	31.83						
	Per each DS1 COCI in combination per month			UNC1X	UC1D1	12.70	6.58	4.72								
	Each Additional 2-Wire VG Loop(SL 2) in the same DS1 Interoffice Transport Combination - Zone 1		1	UNCVX	UEAL2	14.38	88.00	55.00	47.24	7.44						
	Each Additional 2-Wire VG Loop(SL2) in the same DS1 Interoffice Transport Combination - Zone 2		2	UNCVX	UEAL2	22.85	88.00	55.00	47.24	7.44						
	Each Additional 2-Wire VG Loop(SL2) in the same DS1 Interoffice Transport Combination - Zone 3		3	UNCVX	UEAL2	36.14	88.00	55.00	47.24	7.44						
	Each Additional Voice Grade COCI - in combination - per month			UNCVX	1D1VG	0.53	6.58	4.72								
	Each Additional DS1 Interoffice Channel per mile in same 3/1 Channel System per month			UNC1X	1L5XX	0.18										
	Each Additional DS1 Interoffice Channel Facility Termination in same 3/1 Channel System per month			UNC1X	U1TF1	60.16	89.27	81.81	16.35	14.44						
	Each Additional DS1 COCI combination per month			UNC1X	UC1D1	12.70	6.58	4.72								
	Nonrecurring Currently Combined Network Elements Switch -As-Is Charge			UNC1X	UNCCC		5.59	5.59	6.98	6.98						
EXTENDED 4-WIRE VOICE GRADE LOOP WITH DEDICATED DS1 INTEROFFICE TRANSPORT w/ 3/1 MUX																

UNBUNDLED NETWORK ELEMENTS - Alabama														Attachment: 2		Exhibit: A	
CATEGORY		RATE ELEMENTS	Interim	Zone	BCS	USOC	RATES ($)					Svc Order Submitted Elec per LSR	Svc Order Submitted Manually per LSR	Incremental Charge - Manual Svc Order vs. Electronic-1st	Incremental Charge - Manual Svc Order vs. Electronic-Add'l	Incremental Charge - Manual Svc Order vs. Electronic-Disc 1st	Incremental Charge - Manual Svc Order vs. Electronic-Disc Add'l
							Rec	Nonrecurring		Nonrecurring Disconnect		OSS Rates ($)					
								First	Add'l	First	Add'l	SOMEC	SOMAN	SOMAN	SOMAN	SOMAN	SOMAN
		First 4-Wire Analog Voice Grade Local Loop in Combination - Zone 1		1	UNCVX	UEAL4	25.34	131.97	94.51	59.14	14.50						
		First 4-Wire Analog Voice Grade Local Loop in Combination - Zone 2		2	UNCVX	UEAL4	38.58	131.97	94.51	59.14	14.50						
		First 4-Wire Analog Voice Grade Local Loop in Combination - Zone 3		3	UNCVX	UEAL4	60.02	131.97	94.51	59.14	14.50						
		First Interoffice Transport - Dedicated - DS1 combination - Per Mile Per Month			UNC1X	1L5XX	0.18										
		First Interoffice Transport - Dedicated - DS1 - Facility Termination Per Month			UNC1X	U1TF1	60.16	89.27	81.81	16.35	14.44						
		Per each 1/0 Channel System in combination Per Month			UNC1X	MQ1	101.06	91.04	62.57	10.54	9.79						
		Per each Voice Grade COCI in combination - per month			UNCVX	1D1VG	0.53	6.58	4.72								
		3/1 Channel System in combination per month			UNC3X	MQ3	166.13	178.14	93.97	33.26	31.83						
		Per each DS1 COCI in combination per month			UNC1X	UC1D1	12.70	6.58	4.72								
		Additional 4-Wire Analog Voice Grade Loop in same DS1 Interoffice Transport Combination - Zone 1		1	UNCVX	UEAL4	25.34	131.97	94.51	59.14	14.50						
		Additional 4-Wire Analog Voice Grade Loop in same DS1 Interoffice Transport Combination - Zone 2		2	UNCVX	UEAL4	38.58	131.97	94.51	59.14	14.50						
		Additional 4-Wire Analog Voice Grade Loop in same DS1 Interoffice Transport Combination - Zone 3		3	UNCVX	UEAL4	60.02	131.97	94.51	59.14	14.50						
		Each Additional DS1 Interoffice Channel per mile in same 3/1 Channel System per month			UNC1X	1L5XX	0.18										
		Each Additional DS1 Interoffice Channel Facility Termination in same 3/1 Channel System per month			UNC1X	U1TF1	60.16	89.27	81.81	16.35	14.44						
		Additional Voice Grade COCI - in combination - per month			UNCVX	1D1VG	0.53	6.58	4.72								
		Nonrecurring Currently Combined Network Elements Switch -As-Is Charge			UNC1X	UNCCC		5.59	5.59	6.98	6.98						
	EXTENDED 4-WIRE 56 KBPS DIGITAL LOOP WITH DEDICATED DS1 INTEROFFICE TRANSPORT w/ 3/1 MUX																
		First 4-Wire 56Kbps Digital Grade Local Loop in Combination - Zone 1		1	UNCDX	UDL56	26.09	126.27	88.80	59.14	14.50						
		First 4-Wire 56Kbps Digital Grade Local Loop in Combination - Zone 2		2	UNCDX	UDL56	35.95	126.27	88.80	59.14	14.50						
		First 4-Wire 56Kbps Digital Grade Local Loop in Combination - Zone 3		3	UNCDX	UDL56	37.88	126.27	88.80	59.14	14.50						
		First Interoffice Transport - Dedicated - DS1 combination - Per Mile Per Month			UNC1X	1L5XX	0.18										
		First Interoffice Transport - Dedicated - DS1 - combination Facility Termination Per Month			UNC1X	U1TF1	60.16	89.27	81.81	16.35	14.44						
		Per each 1/0 Channel System in combination Per Month			UNC1X	MQ1	101.06	91.04	62.57	10.54	9.79						
		Per each OCU-DP COCI (data) COCI per month (2.4-64kbs)			UNCDX	1D1DD	1.12	6.58	4.72								
		3/1 Channel System in combination per month			UNC3X	MQ3	166.13	178.14	93.97	33.26	31.83						
		Per each DS1 COCI in combination per month			UNC1X	UC1D1	12.70	6.58	4.72								
		Additional 4-Wire 56Kbps Digital Grade Loop in same DS1 Interoffice Transport Combination - Zone 1		1	UNCDX	UDL56	26.09	126.27	88.80	59.14	14.50						
		Additional 4-Wire 56Kbps Digital Grade Loop in same DS1 Interoffice Transport Combination - Zone 2		2	UNCDX	UDL56	35.95	126.27	88.80	59.14	14.50						
		Additional 4-Wire 56Kbps Digital Grade Loop in same DS1 Interoffice Transport Combination - Zone 3		3	UNCDX	UDL56	37.88	126.27	88.80	59.14	14.50						
		OCU-DP COCI (data) COCI in combination per month (2.4-64kbs)			UNCDX	1D1DD	1.12	6.58	4.72								
		Each Additional DS1 Interoffice Channel per mile in same 3/1 Channel System per month			UNC1X	1L5XX	0.18										
		Each Additional DS1 Interoffice Channel Facility Termination in same 3/1 Channel System per month			UNC1X	U1TF1	60.16	89.27	81.81	16.35	14.44						
		Each Additional DS1 COCI in the same 3/1 channel system combination per month			UNC1X	UC1D1	12.70	6.58	4.72								
		Nonrecurring Currently Combined Network Elements Switch -As-Is Charge			UNC1X	UNCCC		5.59	5.59	6.98	6.98						
	EXTENDED 4-WIRE 64 KBPS DIGITAL LOOP WITH DEDICATED DS1 INTEROFFICE TRANSPORT w/ 3/1 MUX																

CATEGORY	RATE ELEMENTS	Interim	Zone	BCS	USOC	RATES ($)					Svc Order Submitted Elec per LSR	Svc Order Submitted Manually per LSR	Attachment: 2 Incremental Charge - Manual Svc Order vs. Electronic-1st	Attachment: 2 Incremental Charge - Manual Svc Order vs. Electronic-Add'l	Exhibit: A Incremental Charge - Manual Svc Order vs. Electronic-Disc 1st	Exhibit: A Incremental Charge - Manual Svc Order vs. Electronic-Disc Add'l
						Rec	Nonrecurring		Nonrecurring Disconnect		OSS Rates ($)					
							First	Add'l	First	Add'l	SOMEC	SOMAN	SOMAN	SOMAN	SOMAN	SOMAN
	First 4-Wire 64Kbps Digital Grade Loop in a DS1 Interoffice Transport Combination - Zone 1		1	UNCDX	UDL64	26.09	126.27	88.80	59.14	14.50						
	First 4-Wire 64Kbps Digital Grade Loop in a DS1 Interoffice Transport Combination - Zone 2		2	UNCDX	UDL64	35.95	126.27	88.80	59.14	14.50						
	First 4-Wire 64Kbps Digital Grade Loop in a DS1 Interoffice Transport Combination - Zone 3		3	UNCDX	UDL64	37.88	126.27	88.80	59.14	14.50						
	First Interoffice Transport - Dedicated - DS1 combination - Per Mile Per Month			UNC1X	1L5XX	0.18										
	First Interoffice Transport - Dedicated - DS1 combination - Facility Termination Per Month			UNC1X	U1TF1	60.16	89.27	81.81	16.35	14.44						
	Per each Channel System 1/0 in combination Per Month			UNC1X	MQ1	101.06	91.04	62.57	10.54	9.79						
	Per each OCU-DP COCI (data) in combination - per month (2.4-64kbs)			UNCDX	1D1DD	1.12	6.58	4.72								
	3/1 Channel System in combination per month			UNC3X	MQ3	166.13	178.14	93.97	33.26	31.83						
	Per each DS1 COCI in combination per month			UNC1X	UC1D1	12.70	6.58	4.72								
	Additional 4-Wire 64Kbps Digital Grade Loop in same DS1 Interoffice Transport Combination - Zone 1		1	UNCDX	UDL64	26.09	126.27	88.80	59.14	14.50						
	Additional 4-Wire 64Kbps Digital Grade Loop in same DS1 Interoffice Transport Combination - Zone 2		2	UNCDX	UDL64	35.95	126.27	88.80	59.14	14.50						
	Additional 4-Wire 64Kbps Digital Grade Loop in same DS1 Interoffice Transport Combination - Zone 3		3	UNCDX	UDL64	37.88	126.27	88.80	59.14	14.50						
	Additional OCU-DP COCI (data) - DS1 to DS0 Channel System combination - per month (2.4-64kbs)			UNCDX	1D1DD	1.12	6.58	4.72								
	Each Additional DS1 Interoffice Channel per mile in same 3/1 Channel System per month			UNC1X	1L5XX	0.18										
	Each Additional DS1 Interoffice Channel Facility Termination in same 3/1 Channel System per month			UNC1X	U1TF1	60.16	89.27	81.81	16.35	14.44						
	Each Additional DS1 COCI in the same 3/1 channel system combination per month			UNC1X	UC1D1	12.70	6.58	4.72								
	Nonrecurring Currently Combined Network Elements Switch -As-Is Charge			UNC1X	UNCCC		5.59	5.59	6.98	6.98						
	EXTENDED 2-WIRE ISDN LOOP WITH DS1 INTEROFFICE TRANSPORT w/ 3/1 MUX															
	First 2-Wire ISDN Loop in a DS1 Interoffice Combination Transport - Zone 1		1	UNCNX	U1L2X	21.88	117.24	79.77	52.88	10.54						
	First 2-Wire ISDN Loop in a DS1 Interoffice Combination Transport - Zone 2		2	UNCNX	U1L2X	32.85	117.24	79.77	52.88	10.54						
	First 2-Wire ISDN Loop in a DS1 Interoffice Combination Transport - Zone 3		3	UNCNX	U1L2X	48.55	117.24	79.77	52.88	10.54						
	First Interoffice Transport - Dedicated - DS1 combination - Per Mile per month			UNC1X	1L5XX	0.18										
	First Interoffice Transport - Dedicated - DS1 combination - Facility Termination per month			UNC1X	U1TF1	60.16	89.27	81.81	16.35	14.44						
	Per each Channel System 1/0 in combination - per month			UNC1X	MQ1	101.06	91.04	62.57	10.54	9.79						
	Per each 2-wire ISDN COCI (BRITE) in combination - per month			UNCNX	UC1CA	2.41	6.58	4.72								
	3/1 Channel System in combination per month			UNC3X	MQ3	166.13	178.14	93.97	33.26	31.83						
	Per each DS1 COCI in combination per month			UNC1X	UC1D1	12.70	6.58	4.72								
	Additional 2-wire ISDN Loop in same DS1Interoffice Transport Combination - Zone 1		1	UNCNX	U1L2X	21.88	117.24	79.77	52.88	10.54						
	Additional 2-wire ISDN Loop in same DS1Interoffice Transport Combination - Zone 2		2	UNCNX	U1L2X	32.85	117.24	79.77	52.88	10.54						
	Additional 2-wire ISDN Loop in same DS1Interoffice Transport Combination - Zone 3		3	UNCNX	U1L2X	48.55	117.24	79.77	52.88	10.54						
	Additional 2-wire ISDN COCI (BRITE) in same 1/0 channel system combination- per month			UNCNX	UC1CA	2.41	6.58	4.72								
	Each Additional DS1 Interoffice Channel per mile in same 3/1 Channel System per month			UNC1X	1L5XX	0.18										
	Each Additional DS1 Interoffice Channel Facility Termination in same 3/1 Channel System per month			UNC1X	U1TF1	60.16	89.27	81.81	16.35	14.44						

UNBUNDLED NETWORK ELEMENTS - Alabama														Attachment: 2		Exhibit: A	
CATEGORY		RATE ELEMENTS	Interim	Zone	BCS	USOC	RATES ($)					Svc Order Submitted Elec per LSR	Svc Order Submitted Manually per LSR	Incremental Charge - Manual Svc Order vs. Electronic-1st	Incremental Charge - Manual Svc Order vs. Electronic-Add'l	Incremental Charge - Manual Svc Order vs. Electronic-Disc 1st	Incremental Charge - Manual Svc Order vs. Electronic-Disc Add'l
							Rec	Nonrecurring		Nonrecurring Disconnect		OSS Rates ($)					
								First	Add'l	First	Add'l	SOMEC	SOMAN	SOMAN	SOMAN	SOMAN	SOMAN
		Each Additional DS1 COCI in the same 3/1 channel system combination per month			UNC1X	UC1D1	12.70	6.58	4.72								
		Nonrecurring Currently Combined Network Elements Switch -As-Is Charge			UNC1X	UNCCC		5.59	5.59	6.98	6.98						
	EXTENDED 4-WIRE DS1 LOOP WITH DEDICATED DS1 INTEROFFICE TRANSPORT w/ 3/1 MUX																
		First 4-wire DS1 Digital Lcoal Loop in Combination - Zone 1		1	UNC1X	USLXX	82.55	252.47	157.54	44.70	11.71						
		First 4-wire DS1 Digital Lcoal Loop in Combination - Zone 2		2	UNC1X	USLXX	154.18	252.47	157.54	44.70	11.71						
		First 4-wire DS1 Digital Lcoal Loop in Combination - Zone 3		3	UNC1X	USLXX	314.52	252.47	157.54	44.70	11.71						
		First Interoffice Transport - Dedicated - DS1 combination - Per Mile Per Month			UNC1X	1L5XX	0.18										
		First Interoffice Transport - Dedicated - DS1 combination - Facility Termination Per Month			UNC1X	U1TF1	60.16	89.27	81.81	16.35	14.44						
		3/1 Channel System in combination per month			UNC3X	MQ3	166.13	178.14	93.97	33.26	31.83						
		Per each DS1 COCI combination per month			UNC1X	UC1D1	12.70	6.58	4.72								
		Each Additional DS1 Interoffice Channel per mile in same 3/1 Channel System per month			UNC1X	1L5XX	0.18										
		Each Additional DS1 Interoffice Channel Facility Termination in same 3/1 Channel System per month			UNC1X	U1TF1	60.16	89.27	81.81	16.35	14.44						
		Each Additional DS1 COCI in the same 3/1 channel system combination per month			UNC1X	UC1D1	12.70	6.58	4.72								
		Additional 4-Wire DS1 Digital Local Loop in Combination - Zone 1		1	UNC1X	USLXX	82.55	252.47	157.54	44.70	11.71						
		Additional 4-Wire DS1 Digital Local Loop in Combination - Zone 2		2	UNC1X	USLXX	154.18	252.47	157.54	44.70	11.71						
		Additional 4-Wire DS1 Digital Local Loop in Combination - Zone 3		3	UNC1X	USLXX	314.52	252.47	157.54	44.70	11.71						
		Nonrecurring Currently Combined Network Elements Switch -As-Is Charge			UNC1X	UNCCC		5.59	5.59	6.98	6.98						
	EXTENDED 4-WIRE 56 KBPS DIGITAL EXTENDED LOOP WITH DS0 INTEROFFICE TRANSPORT																
		First 4-wire 56 kbps Local Loop in combination - Zone 1		1	UNCDX	UDL56	26.09	126.27	88.80	59.14	14.50						
		First 4-wire 56 kbps Local Loop in combination - Zone 2		2	UNCDX	UDL56	35.95	126.27	88.80	59.14	14.50						
		First 4-wire 56 kbps Local Loop in combination - Zone 3		3	UNCDX	UDL56	37.88	126.27	88.80	59.14	14.50						
		First 4-wiree 56 kbps Interoffice Transport - Dedicated - Per Mile per month			UNCDX	1L5XX	0.008838										
		First 4-wire 56 kbps Interoffice Transport - Dedicated - Facility Termination per month			UNCDX	U1TD5	15.12	40.54	27.41	16.74	6.90						
		Nonrecurring Currently Combined Network Elements Switch -As-Is Charge			UNCDX	UNCCC		5.59	5.59	6.98	6.98						
	EXTENDED 4-WIRE 64 KBPS DIGITAL EXTENDED LOOP WITH DS0 INTEROFFICE TRANSPORT																
		First 4-wire 64 kbps Local Loop in combination - Zone 1		1	UNCDX	UDL64	26.09	126.27	88.80	59.14	14.50						
		First 4-wire 64 kbps Local Loop in combination - Zone 2		2	UNCDX	UDL64	35.95	126.27	88.80	59.14	14.50						
		First 4-wire 64 kbps Local Loop in combination - Zone 3		3	UNCDX	UDL64	37.88	126.27	88.80	59.14	14.50						
		First l4-wire 65 kbps Interoffice Transport - Dedicated - Per Mile per month			UNCDX	1L5XX	0.008838										
		First 4-wire 64 kbps Interoffice Transport - Dedicated - Facility Termination per month			UNCDX	U1TD6	15.12	40.54	27.41	16.74	6.90						
		Nonrecurring Currently Combined Network Elements Switch -As-Is Charge			UNCDX	UNCCC		5.59	5.59	6.98	6.98						
ADDITIONAL NETWORK ELEMENTS																	
	When used as a part of a currently combined facility, the non-recurrng charges do not apply, but a Switch As Is charge does apply.																
	When used as ordinarily combined network elements in All States, the non-recurring charges apply and the Switch As Is Charge does not.																
	Nonrecurring Currently Combined Network Elements "Switch As Is" Charge (One applies to each combination)																
		Nonrecurring Currently Combined Network Elements Switch -As-Is Charge - 2 wire/4-Wire VG			UNCVX	UNCCC		5.59	5.59	6.98	6.98						
		Nonrecurring Currently Combined Network Elements Switch -As-Is Charge - 56/64 kbps			UNCDX	UNCCC		5.59	5.59	6.98	6.98						
		Nonrecurring Currently Combined Network Elements Switch -As-Is Charge - DS1			UNC1X	UNCCC		5.59	5.59	6.98	6.98						

UNBUNDLED NETWORK ELEMENTS - Alabama														Attachment: 2		Exhibit: A	
CATEGORY		RATE ELEMENTS	Interim	Zone	BCS	USOC	RATES ($)					Svc Order Submitted Elec per LSR	Svc Order Submitted Manually per LSR	Incremental Charge - Manual Svc Order vs. Electronic-1st	Incremental Charge - Manual Svc Order vs. Electronic-Add'l	Incremental Charge - Manual Svc Order vs. Electronic-Disc 1st	Incremental Charge - Manual Svc Order vs. Electronic-Disc Add'l
							Rec	Nonrecurring		Nonrecurring Disconnect		OSS Rates ($)					
								First	Add'l	First	Add'l	SOMEC	SOMAN	SOMAN	SOMAN	SOMAN	SOMAN
		Nonrecurring Currently Combined Network Elements Switch -As-Is Charge - DS3			UNC3X	UNCCC		5.59	5.59	6.98	6.98						
		Nonrecurring Currently Combined Network Elements Switch -As-Is Charge - STS1			UNCSX	UNCCC		5.59	5.59	6.98	6.98						
	Optional Features & Functions:																
		Clear Channel Capability Extended Frame Option - per DS1	I		U1TD1, ULDD1,UNC1X	CCOEF		0I	0I	0I	0I						
		Clear Channel Capability Super FrameOption - per DS1	I		U1TD1, ULDD1,UNC1X	CCOSF		0I	0I	0I	0I						
		Clear Channel Capability (SF/ESF) Option - Subsequent Activity - per DS1	I		ULDD1, U1TD1, UNC1X, USL	NRCCC		184.85S	23.81S	1.99S	0.7741S						
		C-bit Parity Option - Subsequent Activity - per DS3	i		U1TD3, ULDD3, UE3, UNC3X	NRCC3		219.13S	7.67S	0.7355S	0S						
	MULTIPLEXERS																
		DS1 to DS0 Channel System per month			UNC1X	MQ1	101.06	91.04	62.57	10.54	9.79						
		OCU-DP COCI (data) - DS1 to DS0 Channel System - per month (2.4-64kbs) used for a Local Loop			UDL	1D1DD	1.12	6.58	4.72	0.00	0.00						
		OCU-DP COCI (data) - DS1 to DS0 Channel System - per month (2.4-64kbs) used for connection to a channelized DS1 Local Channel in the same SWC as collocation			U1TUD	1D1DD	1.12	6.58	4.72	0.00	0.00						
		2-wire ISDN COCI (BRITE) - DS1 to DS0 Channel Systsem - per month for a Local Loop			UDN	UC1CA	2.41	6.58	4.72	0.00	0.00						
		2-wire ISDN COCI (BRITE) - DS1 to DS0 Channel Systsem - per month used for connection to a channelized DS1 Local Channel in the same SWC as collocation			U1TUB	UC1CA	2.41	6.58	4.72	0.00	0.00						
		Voice Grade COCI - DS1 to DS0 Channel System - per month used for a Local Loop			UEA	1D1VG	0.53	6.58	4.72	0.00	0.00						
		Voice Grade COCI - DS1 to DS0 Channel System - per month used for connection to a channelized DS1 Local Channel in the same SWC as collocation			U1TUC	1D1VG	0.53	6.58	4.72	0.00	0.00						
		DS3 to DS1 Channel System per month			UNC3X	MQ3	166.13	178.14	93.97	33.26	31.83						
		STS-1 to DS1 Channel System per month			UNCSX	MQ3	166.13	178.14	93.97	33.26	31.83						
		DS1 COCI used with Loop per month			USL	UC1D1	12.70	6.58	4.72	0.00	0.00						
		DS1 COCI (used for connection to a channelized DS1 Local Channel in the same SWC as collocation) per month			U1TUA	UC1D1	12.70	6.58	4.72	0.00	0.00						
		DS1 COCI used with Interoffice Channel per month			U1TD1	UC1D1	12.70	6.58	4.72	0.00	0.00						
		DS3 Interface Unit (DS1 COCI) used with Local Channel per month			ULDD1	UC1D1	12.70	6.58	4.72	0.00	0.00						
UNBUNDLED LOCAL EXCHANGE SWITCHING(PORTS)																	
	Exchange Ports																
	NOTE: Although the Port Rate includes all available features in GA, KY, LA & TN, the desired features will need to be ordered using retail USOCs																
	2-WIRE VOICE GRADE LINE PORT RATES (RES)																
		Exchange Ports - 2-Wire Analog Line Port- Res.			UEPSR	UEPRL	1.38	2.38	2.27	1.42	1.33						
		Exchange Ports - 2-Wire Analog Line Port with Caller ID - Res.			UEPSR	UEPRC	1.38	2.38	2.27	1.42	1.33						
		Exchange Ports - 2-Wire Analog Line Port outgoing only - Res.			UEPSR	UEPRO	1.38	2.38	2.27	1.42	1.33						
		Exchange Ports - 2-Wire VG unbundled AL extended local dialing parity Port with Caller ID - Res.			UEPSR	UEPAR	1.38	2.38	2.27	1.42	1.33						
		Exchange Ports - 2-Wire VG unbundled res, low usage line port with Caller ID (LUM)			UEPSR	UEPAP	1.38	2.38	2.27	1.42	1.33						
		Exchange Ports - 2-Wire VG Alabama Residence Dialing Plan without Caller Id			UEPSR	UEPWA	1.38	2.38	2.27	1.42	1.33						
		2-Wire voice unbundled Low Usage Line Port without Caller ID Capability			UEPSR	UEPRT	1.38	2.38	2.27	1.42	1.33						
		Subsequent Activity			UEPSR	USASC	0.00	0.00	0.00								
	FEATURES																
		All Available Vertical Features			UEPSR	UEPVF	1.98	0.00	0.00								
	2-WIRE VOICE GRADE LINE PORT RATES (BUS)																

UNBUNDLED NETWORK ELEMENTS - Alabama														Attachment: 2		Exhibit: A	
CATEGORY	RATE ELEMENTS	Interim	Zone	BCS	USOC	RATES ($)					Svc Order Submitted Elec per LSR	Svc Order Submitted Manually per LSR	Incremental Charge - Manual Svc Order vs. Electronic-1st	Incremental Charge - Manual Svc Order vs. Electronic-Add'l	Incremental Charge - Manual Svc Order vs. Electronic-Disc 1st	Incremental Charge - Manual Svc Order vs. Electronic-Disc Add'l
						Rec	Nonrecurring		Nonrecurring Disconnect		OSS Rates ($)					
							First	Add'l	First	Add'l	SOMEC	SOMAN	SOMAN	SOMAN	SOMAN	SOMAN
	Exchange Ports - 2-Wire Analog Line Port without Caller ID - Bus			UEPSB	UEPBL	1.38	2.38	2.27	1.42	1.33						
	Exchange Ports - 2-Wire VG unbundled Line Port with unbundled port with Caller+E484 ID - Bus.			UEPSB	UEPBC	1.38	2.38	2.27	1.42	1.33						
	Exchange Ports - 2-Wire Analog Line Port outgoing only - Bus.			UEPSB	UEPBO	1.38	2.38	2.27	1.42	1.33						
	Exchange Ports - 2-Wire VG unbundled AL extended local dialing parity Port with Caller ID - Bus.			UEPSB	UEPAW	1.38	2.38	2.27	1.42	1.33						
	Exhange Ports - 2-Wire VG unbundled incoming only port with Caller ID - Bus			UEPSB	UEPB1	1.38	2.38	2.27	1.42	1.33						
	Exchange Ports - 2-Wire Voice Alabama Business Dialing Plan without Caller ID			UEPSB	UEPWB	1.38	2.38	2.27	1.42	1.33						
	2-Wire voice unbundled Incoming Only Port without Caller ID Capability			UEPSB	UEPBE	1.38	2.38	2.27	1.42	1.33						
	Subsequent Activity			UEPSB	USASC	0.00	0.00	0.00								
FEATURES																
	All Available Vertical Features			UEPSB	UEPVF	1.98	0.00	0.00								
EXCHANGE PORT RATES (DID & PBX)																
	2-Wire VG Unbundled 2-Way PBX Trunk - Res			UEPSE	UEPRD	1.38	31.27	14.85	13.94	0.90						
	2-Wire VG Line Side Unbundled 2-Way PBX Trunk - Bus			UEPSP	UEPPC	1.38	31.27	14.85	13.94	0.90						
	2-Wire VG Line Side Unbundled Outward PBX Trunk - Bus			UEPSP	UEPPO	1.38	31.27	14.85	13.94	0.90						
	2-Wire VG Line Side Unbundled Incoming PBX Trunk - Bus			UEPSP	UEPP1	1.38	31.27	14.85	13.94	0.90						
	2-Wire Analog Long Distance Terminal PBX Trunk - Bus			UEPSP	UEPLD	1.38	31.27	14.85	13.94	0.90						
	2-Wire Voice Unbundled 2-Way PBX Alabama Calling Port			UEPSP	UEPA2	1.38	31.27	14.85	13.94	0.90						
	2-Wire Voice Unbundled PBX LD Terminal Ports			UEPSP	UEPLD	1.38	31.27	14.85	13.94	0.90						
	2-Wire Vice Unbundled 2-Way PBX Usage Port			UEPSP	UEPXA	1.38	31.27	14.85	13.94	0.90						
	2-Wire Voice Unbundled PBX Toll Terminal Hotel Ports			UEPSP	UEPXB	1.38	31.27	14.85	13.94	0.90						
	2-Wire Voice Unbundled PBX LD DDD Terminals Port			UEPSP	UEPXC	1.38	31.27	14.85	13.94	0.90						
	2-Wire Voice Unbundled PBX LD Terminal Switchboard Port			UEPSP	UEPXD	1.38	31.27	14.85	13.94	0.90						
	2-Wire Voice Unbundled PBX LD Terminal Switchboard IDD Capable Port			UEPSP	UEPXE	1.38	31.27	14.85	13.94	0.90						
	2-Wire Voice Unbundled 2-Way PBX Hotel/Hospital Economy Administrative Calling Port			UEPSP	UEPXL	1.38	31.27	14.85	13.94	0.90						
	2-Wire Voice Unbundled 2-Way PBX Hotel/Hospital Economy Room Calling Port			UEPSP	UEPXM	1.38	31.27	14.85	13.94	0.90						
	2-Wire Voice Unbundled 1-Way Outgoing PBX Hotel/Hospital Discount Room Calling Port			UEPSP	UEPXO	1.38	31.27	14.85	13.94	0.90						
	2-Wire Voice Unbundled 1-Way Outgoing PBX Measured Port			UEPSP	UEPXS	1.38	31.27	14.85	13.94	0.90						
	Subsequent Activity			UEPSP	USASC	0.00	0.00	0.00								
FEATURES																
	All Available Vertical Features			UEPSP UEPSE	UEPVF	1.98	0.00	0.00								
EXCHANGE PORT RATES (COIN)																
	Exchange Ports - Coin Port					1.38	2.38	2.27	1.42	1.33						
NOTE: Transmission/usage charges associated with POTS circuit switched usage will also apply to circuit switched voice and/or circuit switched data transmission by B-Channels associated with 2-wire ISDN ports.																
NOTE: Access to B Channel or D Channel Packet capabilities will be available only through BFR/New Business Request Process. Rates for the packet capabilities will be determined via the Bona Fide Request/New Business Request Process.																
UNBUNDLED LOCAL EXCHANGE SWITCHING(PORTS)																
EXCHANGE PORT RATES																
The DS1 Port rates below for 4-Wire DDITS Trunk Port and 4-Wire ISDN Port in this rate exhibit apply to the embedded base in place as of 10/2/03 until 4/1/04. After 4/1/04 these rates shall revert to tariff rates or a separate agreement.																
Requests for 4-Wire DDITS Trunk Ports with 4-Wire ISDN DS1 Ports after the effective date of this amendment shall be provided pursuant to a separate agreement or tariff at BellSouth's discretion.																
	Exchange Ports - 2-Wire DID Port			UEPEX	UEPP2	8.05	119.31	18.74	59.90	3.76						
	Exchange Ports - DDITS Port - 4-Wire DS1 Port with DID capability (E:4/1/2004)			UEPDD	UEPDD	60.09	202.02	95.69	72.59	2.46						
	Exchange Ports - 2-Wire ISDN Port (See Notes below.)			UEPTX, UEPSX	U1PMA	9.79	72.77	52.99	47.79	10.74						
	All Features Offered			UEPTX, UEPSX	UEPVF	1.98	0.00	0.00								
	Exchange Ports - 2-Wire ISDN Port -- Channel Profiles			UEPTX, UEPSX	U1UMA	0.00	0.00	0.00								
NOTE: Transmission/usage charges associated with POTS circuit switched usage will also apply to circuit switched voice and/or circuit switched data transmission by B-Channels associated with 2-wire ISDN ports.																
NOTE: Access to B Channel or D Channel Packet capabilities will be available only through BFR/New Business Request Process. Rates for the packet capabilities will be determined via the Bona Fide Request/New Business Request Process.																
EXCHANGE PORT RATES (continued)																

UNBUNDLED NETWORK ELEMENTS - Alabama														Attachment: 2		Exhibit: A	
CATEGORY		RATE ELEMENTS	Interim	Zone	BCS	USOC	RATES ($)					Svc Order Submitted Elec per LSR	Svc Order Submitted Manually per LSR	Incremental Charge - Manual Svc Order vs. Electronic-1st	Incremental Charge - Manual Svc Order vs. Electronic-Add'l	Incremental Charge - Manual Svc Order vs. Electronic-Disc 1st	Incremental Charge - Manual Svc Order vs. Electronic-Disc Add'l
							Rec	Nonrecurring		Nonrecurring Disconnect		OSS Rates ($)					
								First	Add'l	First	Add'l	SOMEC	SOMAN	SOMAN	SOMAN	SOMAN	SOMAN
		Exchange Ports - 4-Wire ISDN DS1 Port with Detailed E911 Locator Capability (E:4/1/2004)			UEPEX	UEPEX	84.32	203.81	101.56	79.18	20.06						
		Exchange Ports - 4-Wire ISDN DS1 Port (E:4/1/2004)			UEPDX	UEPDX	84.32	203.81	101.56	79.18	20.06						
		Physical Collocation - DS1 Cross-Connects			UEPEX UEPDX	PE1P1	1.11	22.03	15.93	6.40	5.79						
		Virtual collocation - Special Access & UNE, cross-connect per DS1			UEPEX UEPDX	CNC1X	1.11	22.03	15.93	6.40	5.79						
	Detailed E911 with Locator Capability (required with UEPEX port)																
		Unbundled Exchange Ports, 4-Wire ISDN DS1 Port - E911 Locator Capability - Initial Profile Establishment per CLEC per State			UEPEX	UEP1A	0.00	1,804.00		156.08							
		Unbundled Exchange Ports, 4-Wire ISDN DS1 Port - E911 Locator Capability - Subsequent Profile Changes, Additions, Deletions			UEPEX	UEP1B	0.00	175.14									
	New or Additional PRI Telephone Numbers																
		Unbundled Exchange Ports, 4-Wire ISDN DS1 Port - E911 Locator Capability 2-way Telephone Numbers, per number in E911 profile [New or Additional]			UEPEX	UEP1C	0.0697	0.49									
		Unbundled Exchange Ports, 4-Wire ISDN DS1 Port - E911 Locator Capability - Outdial Telephone Numbers, per number in E911 profile [New or Additional]			UEPEX	UEP1D	0.0697	11.51									
		Unbundled Exchange Ports, 4-Wire ISDN DS1 Port - Inward Telephone Numbers - Inward Data Only Option [New or Additional]			UEPDX	UEP1E	0.00	0.049									
		Exchange Ports - 4-Wire ISDN DS1 Port - Subsequent [New] Inward Tel Numbers [Customer Testing Purposes]			UEPEX	PR7ZT	0.00	23.02									
	LOCAL NUMBER PORTABILITY																
		Local Number Portability (1 per port)			UEPEX UEPDX	LNPCN	1.75										
	INTERFACE (Provsioning Only)																
		Voice/Data			UEPEX	PR71V	0.00	0.00	0.00								
		Digital Data			UEPEX	PR71D	0.00	0.00	0.00								
		Inward Data			UEPDX	PR71E	0.00	0.00	0.00								
	New or Additional Channel																
		New or Additional - Voice/Data "B" Channel			UEPEX	PR7BV	0.00	14.53									
		New or Additional - Digital Data "B" Channel			UEPEX	PR7BF	0.00	14.53									
		New or Additional Inward Data "B" Channel			UEPDX	PR7BD	0.00	14.53									
		New or Additional Useage Sensitive Voice Data "B" Channel			UEPEX	PR7BS	0.00	14.53									
		New or Additional Useage Sensitive Digital Data "B" Channel			UEPEX	PR7BU	0.00	14.53									
		New or Additional PRI "D" Channel			UEPEX	PR7EX	0.00	14.53									
	CALL TYPES																
		Inward			UEPEX UEPDX	PR7C1	0.00	0.00	0.00								
		Outward			UEPEX	PR7CO	0.00	0.00	0.00								
		Two-way			UEPEX	PR7CC	0.00	0.00	0.00								
	UNBUNDLED PORT with REMOTE CALL FORWARDING CAPABILITY																
	UNBUNDLED REMOTE CALL FORWARDING SERVICE - RESIDENCE																
		Unbundled Remote Call Forwarding Service, Area Calling, Res			UEPVR	UERAC	1.38	2.38	2.27	1.42	1.33						
		Unbundled Remote Call Forwarding Service, Local Calling - Res			UEPVR	UERLC	1.38	2.38	2.27	1.42	1.33						
		Unbundled Remote Call Forwarding Service, InterLATA - Res			UEPVR	UERTE	1.38	2.38	2.27	1.42	1.33						
		Unbundled Remote Call Forwarding Service, IntraLATA - Res			UEPVR	UERTR	1.38	2.38	2.27	1.42	1.33						
	Non-Recurring																
		Unbundled Remote Call Forwarding Service - Conversion - Switch-as-is			UEPVR	USAC2		0.10	0.10								
		Unbundled Remote Call Forwarding Service - Conversion with allowed change (PIC and LPIC)			UEPVR	USACC		0.10	0.10								
	UNBUNDLED REMOTE CALL FORWARDING - Bus																
		Unbundled Remote Call Forwarding Service, Area Calling - Bus			UEPVB	UERAC	1.38	2.38	2.27	1.42	1.33						
		Unbundled Remote Call Forwarding Service, Local Calling - Bus			UEPVB	UERLC	1.38	2.38	2.27	1.42	1.33						

UNBUNDLED NETWORK ELEMENTS - Alabama													Attachment: 2		Exhibit: A	
CATEGORY	RATE ELEMENTS	Interim	Zone	BCS	USOC	RATES ($)					Svc Order Submitted Elec per LSR	Svc Order Submitted Manually per LSR	Incremental Charge - Manual Svc Order vs. Electronic-1st	Incremental Charge - Manual Svc Order vs. Electronic-Add'l	Incremental Charge - Manual Svc Order vs. Electronic-Disc 1st	Incremental Charge - Manual Svc Order vs. Electronic-Disc Add'l
						Rec	Nonrecurring		Nonrecurring Disconnect		OSS Rates ($)					
							First	Add'l	First	Add'l	SOMEC	SOMAN	SOMAN	SOMAN	SOMAN	SOMAN
	Unbundled Remote Call Forwarding Service, InterLATA - Bus			UEPVB	UERTE	1.38	2.38	2.27	1.42	1.33						
	Unbundled Remote Call Forwarding Service, IntraLATA - Bus			UEPVB	UERTR	1.38	2.38	2.27	1.42	1.33						
	Unbundled Remote Call Forwarding Service Expanded and Exception Local Calling			UEPVB	UERVJ	1.38	2.38	2.27	1.42	1.33						
Non-Recurring																
	Unbundled Remote Call Forwarding Service - Conversion - Switch-as-is			UEPVB	USAC2		0.10	0.10								
	Unbundled Remote Call Forwarding Service - Conversion with allowed change (PIC and LPIC)			UEPVB	USACC		0.10	0.10								
UNBUNDLED LOCAL SWITCHING, PORT USAGE																
End Office Switching (Port Usage)																
	End Office Switching Function, Per MOU					0.0007025										
	End Office Trunk Port - Shared, Per MOU					0.0001638										
Tandem Switching (Port Usage) (Local or Access Tandem)																
	Tandem Switching Function Per MOU					0.000095										
	Tandem Trunk Port - Shared, Per MOU					0.0002015										
	Tandem Switching Function Per MOU (Melded)					0.000040993										
	Tandem Trunk Port - Shared, Per MOU (Melded)					0.000086947										
	Melded Factor: 43.15% of the Tandem Rate															
Common Transport																
	Common Transport - Per Mile, Per MOU					0.0000023										
	Common Transport - Facilities Termination Per MOU					0.0003224										
UNBUNDLED PORT/LOOP COMBINATIONS - COST BASED RATES																
Cost Based Rates are applied where BellSouth is required by FCC and/or State Commission rule to provide Unbundled Local Switching or Switch Ports.																
Features shall apply to the Unbundled Port/Loop Combination - Cost Based Rate section in the same manner as they are applied to the Stand-Alone Unbundled Port section of this Rate Exhibit.																
End Office and Tandem Switching Usage and Common Transport Usage rates in the Port section of this rate exhibit shall apply to all combinations of loop/port network elements except for UNE Coin Port/Loop Combinations.																
The first and additional Port nonrecurring charges apply to Not Currently Combined Combos. For Currently Combined Combos the nonrecurring charges shall be those identified in the Nonrecurring - Currently Combined sections.																
2-WIRE VOICE GRADE LOOP WITH 2-WIRE LINE PORT (RES)																
UNE Port/Loop Combination Rates																
	2-Wire VG Loop/Port Combo - Zone 1		1			12.70										
	2-Wire VG Loop/Port Combo - Zone 2		2			21.19										
	2-Wire VG Loop/Port Combo - Zone 3		3			34.80										
UNE Loop Rates																
	2-Wire Voice Grade Loop (SL1) - Zone 1		1	UEPRX	UEPLX	11.55										
	2-Wire Voice Grade Loop (SL1) - Zone 2		2	UEPRX	UEPLX	20.04										
	2-Wire Voice Grade Loop (SL1) - Zone 3		3	UEPRX	UEPLX	33.65										
2-Wire Voice Grade Line Port Rates (Res)																
	2-Wire voice unbundled port - residence			UEPRX	UEPRL	1.15	40.19	19.83	24.91	6.63						
	2-Wire voice unbundled port with Caller ID - res			UEPRX	UEPRC	1.15	40.19	19.83	24.91	6.63						
	2-Wire voice unbundled port outgoing only - res			UEPRX	UEPRO	1.15	40.19	19.83	24.91	6.63						
	2-Wire voice Grade unbundled Alabama extended local dialing parity port with Caller ID - res			UEPRX	UEPAR	1.15	40.19	19.83	24.91	6.63						
	2-Wire voice unbundles res, low usage line port with Caller ID (LUM)			UEPRX	UEPAP	1.15	40.19	19.83	24.91	6.63						
	2-Wire Voice Unbundled Alabama Residence Dialing Plan without Caller ID			UEPRX	UEPWA	1.15	40.19	19.83	24.91	6.63						
	2-Wire voice unbundled Low Usage Line Port without Caller ID Capability			UEPRX	UEPRT	1.15	40.19	19.83	24.91	6.63						
FEATURES																
	All Features Offered			UEPRX	UEPVF	1.98	0.00	0.00								
LOCAL NUMBER PORTABILITY																
	Local Number Portability (1 per port)			UEPRX	LNPCX	0.35										
NONRECURRING CHARGES (NRCs) - CURRENTLY COMBINED																
	2-Wire Voice Grade Loop / Line Port Combination - Conversion - Switch-as-is			UEPRX	USAC2		0.10	0.10								
	2-Wire Voice Grade Loop / Line Port Combination - Conversion - Switch with change			UEPRX	USACC		0.10	0.10								
ADDITIONAL NRCs																

CATEGORY	RATE ELEMENTS	Interim	Zone	BCS	USOC	RATES ($)					Svc Order Submitted Elec per LSR	Svc Order Submitted Manually per LSR	Attachment: 2 Incremental Charge - Manual Svc Order vs. Electronic-1st	Attachment: 2 Incremental Charge - Manual Svc Order vs. Electronic-Add'l	Exhibit: A Incremental Charge - Manual Svc Order vs. Electronic-Disc 1st	Exhibit: A Incremental Charge - Manual Svc Order vs. Electronic-Disc Add'l
						Rec	Nonrecurring		Nonrecurring Disconnect		OSS Rates ($)					
							First	Add'l	First	Add'l	SOMEC	SOMAN	SOMAN	SOMAN	SOMAN	SOMAN
	2-Wire Voice Grade Loop/Line Port Combination - Subsequent Activity			UEPRX	USAS2	0.00	0.00	0.00								
	Unbundled Miscellaneous Rate Element, Tag Loop at End User Premise			UEPRX	URETL		8.33	0.83								
OFF/ON PREMISES EXTENSION CHANNELS																
	2 Wire Analog Voice Grade Extension Loop – Non-Design		1	UEPRX	UEAEN	12.58	37.81	17.56	23.49	5.30						
	2 Wire Analog Voice Grade Extension Loop – Non-Design		2	UEPRX	UEAEN	21.05	37.81	17.56	23.49	5.30						
	2 Wire Analog Voice Grade Extension Loop – Non-Design		3	UEPRX	UEAEN	34.34	37.81	17.56	23.49	5.30						
	2 Wire Analog Voice Grade Extension Loop – Design		1	UEPRX	UEAED	14.38	88.00	55.00	47.24	7.44						
	2 Wire Analog Voice Grade Extension Loop – Design		2	UEPRX	UEAED	22.85	88.00	55.00	47.24	7.44						
	2 Wire Analog Voice Grade Extension Loop – Design		3	UEPRX	UEAED	36.14	88.00	55.00	47.24	7.44						
INTEROFFICE TRANSPORT																
	Interoffice Transport - Dedicated - 2 Wire Voice Grade - Facility Termination			UEPRX	U1TV2	21.13	40.54	27.41	16.74	6.90						
	Interoffice Transport - Dedicated - 2 Wire Voice Grade - Per Mile or Fraction Mile			UEPRX	U1TVM	0.008838	0.00	0.00								
2-WIRE VOICE GRADE LOOP WITH 2-WIRE LINE PORT (BUS)																
UNE Port/Loop Combination Rates																
	2-Wire VG Loop/Port Combo - Zone 1		1			12.70										
	2-Wire VG Loop/Port Combo - Zone 2		2			21.19										
	2-Wire VG Loop/Port Combo - Zone 3		3			34.80										
UNE Loop Rates																
	2-Wire Voice Grade Loop (SL1) - Zone 1		1	UEPBX	UEPLX	11.55										
	2-Wire Voice Grade Loop (SL1) - Zone 2		2	UEPBX	UEPLX	20.04										
	2-Wire Voice Grade Loop (SL1) - Zone 3		3	UEPBX	UEPLX	33.65										
2-Wire Voice Grade Line Port (Bus)																
	2-Wire voice unbundled port without Caller ID - bus			UEPBX	UEPBL	1.15	40.19	19.83	24.91	6.63						
	2-Wire voice unbundled port with Caller + E484 ID - bus			UEPBX	UEPBC	1.15	40.19	19.83	24.91	6.63						
	2-Wire voice unbundled port outgoing only - bus			UEPBX	UEPBO	1.15	40.19	19.83	24.91	6.63						
	2-Wire voice Grade unbundled Alabama extended local dialing parity port with Caller ID - bus			UEPBX	UEPAW	1.15	40.19	19.83	24.91	6.63						
	2-Wire voice unbundled incoming only port with Caller ID - Bus			UEPBX	UEPB1	1.15	40.19	19.83	24.91	6.63						
	2-Wire Voice Unbundled Alabama Business Dialing Plan without Caller ID			UEPBX	UEPWB	1.15	40.19	19.83	24.91	6.63						
	2-Wire voice unbundled Incoming Only Port without Caller ID Capability			UEPBX	UEPBE	1.15	40.19	19.83	24.91	6.63						
LOCAL NUMBER PORTABILITY																
	Local Number Portability (1 per port)			UEPBX	LNPCX	0.35										
FEATURES																
	All Features Offered			UEPBX	UEPVF	1.98	0.00	0.00								
NONRECURRING CHARGES (NRCs) - CURRENTLY COMBINED																
	2-Wire Voice Grade Loop / Line Port Combination - Conversion - Switch-as-is			UEPBX	USAC2		0.10	0.10								
	2-Wire Voice Grade Loop / Line Port Combination - Conversion - Switch with change			UEPBX	USACC		0.10	0.10								
ADDITIONAL NRCs																
	2-Wire Voice Grade Loop/Line Port Combination - Subsequent Activity			UEPBX	USAS2		0.00	0.00								
	Unbundled Miscellaneous Rate Element, Tag Loop at End User Premise			UEPBX	URETL		8.33	0.83								
OFF/ON PREMISES EXTENSION CHANNELS																
	2 Wire Analog Voice Grade Extension Loop – Non-Design		1	UEPBX	UEAEN	12.58	37.81	17.56	23.49	5.30						
	2 Wire Analog Voice Grade Extension Loop – Non-Design		2	UEPBX	UEAEN	21.05	37.81	17.56	23.49	5.30						
	2 Wire Analog Voice Grade Extension Loop – Non-Design		3	UEPBX	UEAEN	34.34	37.81	17.56	23.49	5.30						
	2 Wire Analog Voice Grade Extension Loop – Design		1	UEPBX	UEAED	14.38	88.00	55.00	47.24	7.44						
	2 Wire Analog Voice Grade Extension Loop – Design		2	UEPBX	UEAED	22.85	88.00	55.00	47.24	7.44						
	2 Wire Analog Voice Grade Extension Loop – Design		3	UEPBX	UEAED	36.14	88.00	55.00	47.24	7.44						
INTEROFFICE TRANSPORT																

CATEGORY	RATE ELEMENTS	Interim	Zone	BCS	USOC	RATES ($)					Svc Order Submitted Elec per LSR	Svc Order Submitted Manually per LSR	Attachment: 2 Incremental Charge - Manual Svc Order vs. Electronic-1st	Attachment: 2 Incremental Charge - Manual Svc Order vs. Electronic-Add'l	Exhibit: A Incremental Charge - Manual Svc Order vs. Electronic-Disc 1st	Exhibit: A Incremental Charge - Manual Svc Order vs. Electronic-Disc Add'l
						Rec	Nonrecurring		Nonrecurring Disconnect		OSS Rates ($)					
							First	Add'l	First	Add'l	SOMEC	SOMAN	SOMAN	SOMAN	SOMAN	SOMAN
	Interoffice Transport - Dedicated - 2 Wire Voice Grade - Facility Termination			UEPBX	U1TV2	21.13	40.54	27.41	16.74	6.90						
	Interoffice Transport - Dedicated - 2 Wire Voice Grade - Per Mile or Fraction Mile			UEPBX	U1TVM	0.008838	0.00	0.00								
2-WIRE VOICE GRADE LOOP WITH 2-WIRE LINE PORT (RES - PBX)																
UNE Port/Loop Combination Rates																
	2-Wire VG Loop/Port Combo - Zone 1		1			12.70										
	2-Wire VG Loop/Port Combo - Zone 2		2			21.19										
	2-Wire VG Loop/Port Combo - Zone 3		3			34.80										
UNE Loop Rates																
	2-Wire Voice Grade Loop (SL 1) - Zone 1		1	UEPRG	UEPLX	11.55										
	2-Wire Voice Grade Loop (SL 1) - Zone 2		2	UEPRG	UEPLX	20.04										
	2-Wire Voice Grade Loop (SL 1) - Zone 3		3	UEPRG	UEPLX	33.65										
2-Wire Voice Grade Line Port Rates (RES - PBX)																
	2-Wire VG Unbundled Combination 2-Way PBX Trunk Port - Res			UEPRG	UEPRD	1.15	69.08	32.41	37.43	6.20						
LOCAL NUMBER PORTABILITY																
	Local Number Portability (1 per port)			UEPRG	LNPCP	3.15	0.00	0.00								
FEATURES																
	All Features Offered			UEPRG	UEPVF	1.98	0.00	0.00								
NONRECURRING CHARGES (NRCs) - CURRENTLY COMBINED																
	2-Wire Voice Grade Loop/ Line Port Combination (PBX) - Conversion - Switch-As-Is			UEPRG	USAC2		7.91	1.90								
	2-Wire Voice Grade Loop/ Line Port Combination (PBX) - Conversion - Switch with Change			UEPRG	USACC		7.81	1.90								
ADDITIONAL NRCs																
	2-Wire Voice Grade Loop/ Line Port Combination (PBX) - Subsequent Activity			UEPRG	USAS2	0.00	0.00	0.00								
	PBX Subsequent Activity - Change/Rearrange Multiline Hunt Group						7.32	7.32								
	Unbundled Miscellaneous Rate Element, Tag Loop at End User Premise			UEPRG	URETL		8.33	0.83								
OFF/ON PREMISES EXTENSION CHANNELS																
	Local Channel Voice grade, per termination		1	UEPRG	P2JHX	14.38	88.00	55.00	47.24	7.44						
	Local Channel Voice grade, per termination		2	UEPRG	P2JHX	22.85	88.00	55.00	47.24	7.44						
	Local Channel Voice grade, per termination		3	UEPRG	P2JHX	36.14	88.00	55.00	47.24	7.44						
	Non-Wire Direct Serve Channel Voice Grade		1	UEPRG	SDD2X	22.41	131.60	61.92	90.50	13.40						
	Non-Wire Direct Serve Channel Voice Grade		2	UEPRG	SDD2X	23.88	131.60	61.92	90.50	13.40						
	Non-Wire Direct Serve Channel Voice Grade		3	UEPRG	SDD2X	33.72	131.60	61.92	90.50	13.40						
INTEROFFICE TRANSPORT																
	Interoffice Transport - Dedicated - 2 Wire Voice Grade - Facility Termination			UEPRG	U1TV2	21.13	40.54	27.41	16.74	6.90						
	Interoffice Transport - Dedicated - 2 Wire Voice Grade - Per Mile or Fraction Mile			UEPRG	U1TVM	0.008838	0.00	0.00								
2-WIRE VOICE GRADE LOOP WITH 2-WIRE LINE PORT (BUS - PBX)																
UNE Port/Loop Combination Rates																
	2-Wire VG Loop/Port Combo - Zone 1		1			12.70										
	2-Wire VG Loop/Port Combo - Zone 2		2			21.19										
	2-Wire VG Loop/Port Combo - Zone 3		3			34.80										
UNE Loop Rates																
	2-Wire Voice Grade Loop (SL 1) - Zone 1		1	UEPPX	UEPLX	11.55										
	2-Wire Voice Grade Loop (SL 1) - Zone 2		2	UEPPX	UEPLX	20.04										
	2-Wire Voice Grade Loop (SL 1) - Zone 3		3	UEPPX	UEPLX	33.65										
2-Wire Voice Grade Line Port Rates (BUS - PBX)																
	Line Side Unbundled Combination 2-Way PBX Trunk Port - Bus			UEPPX	UEPPC	1.15	69.08	32.41	37.43	6.20						
	Line Side Unbundled Outward PBX Trunk Port - Bus			UEPPX	UEPPO	1.15	69.08	32.41	37.43	6.20						
	Line Side Unbundled Incoming PBX Trunk Port - Bus			UEPPX	UEPP1	1.15	69.08	32.41	37.43	6.20						

UNBUNDLED NETWORK ELEMENTS - Alabama														Attachment: 2		Exhibit: A	
CATEGORY	RATE ELEMENTS	Interim	Zone	BCS	USOC	RATES ($)					Svc Order Submitted Elec per LSR	Svc Order Submitted Manually per LSR	Incremental Charge - Manual Svc Order vs. Electronic-1st	Incremental Charge - Manual Svc Order vs. Electronic-Add'l	Incremental Charge - Manual Svc Order vs. Electronic-Disc 1st	Incremental Charge - Manual Svc Order vs. Electronic-Disc Add'l
						Rec	Nonrecurring		Nonrecurring Disconnect		OSS Rates ($)					
							First	Add'l	First	Add'l	SOMEC	SOMAN	SOMAN	SOMAN	SOMAN	SOMAN
	2-Wire Voice Unbundled 2-Way Combination PBX Alabama Calling Port			UEPPX	UEPA2	1.15	69.08	32.41	37.43	6.20						
	2-Wire Voice Unbundled PBX LD Terminal Ports			UEPPX	UEPLD	1.15	69.08	32.41	37.43	6.20						
	2-Wire Voice Unbundled 2-Way Combination PBX Usage Port			UEPPX	UEPXA	1.15	69.08	32.41	37.43	6.20						
	2-Wire Voice Unbundled PBX Toll Terminal Hotel Ports			UEPPX	UEPXB	1.15	69.08	32.41	37.43	6.20						
	2-Wire Voice Unbundled PBX LD DDD Terminals Port			UEPPX	UEPXC	1.15	69.08	32.41	37.43	6.20						
	2-Wire Voice Unbundled PBX LD Terminal Switchboard Port			UEPPX	UEPXD	1.15	69.08	32.41	37.43	6.20						
	2-Wire Voice Unbundled PBX LD Terminal Switchboard IDD Capable Port			UEPPX	UEPXE	1.15	69.08	32.41	37.43	6.20						
	2-Wire Voice Unbundled 2-Way PBX Hotel/Hospital Economy Administrative Calling Port			UEPPX	UEPXL	1.15	69.08	32.41	37.43	6.20						
	2-Wire Voice Unbundled 2-Way PBX Hotel/Hospital Economy Room Calling Port			UEPPX	UEPXM	1.15	69.08	32.41	37.43	6.20						
	2-Wire Voice Unbundled 1-Way Outgoing PBX Hotel/Hospital Discount Room Calling Port			UEPPX	UEPXO	1.15	69.08	32.41	37.43	6.20						
	2-Wire Voice Unbundled 1-Way Outgoing PBX Measured Port			UEPPX	UEPXS	1.15	69.08	32.41	37.43	6.20						
LOCAL NUMBER PORTABILITY																
	Local Number Portability (1 per port)			UEPPX	LNPCP	3.15	0.00	0.00								
FEATURES																
	All Features Offered			UEPPX	UEPVF	1.98	0.00	0.00								
NONRECURRING CHARGES (NRCs) - CURRENTLY COMBINED																
	2-Wire Voice Grade Loop/ Line Port Combination (PBX) - Conversion - Switch-As-Is			UEPPX	USAC2		7.91	1.90								
	2-Wire Voice Grade Loop/ Line Port Combination (PBX) - Conversion - Switch with Change			UEPPX	USACC		7.91	1.90								
ADDITIONAL NRCs																
	2-Wire Voice Grade Loop/ Line Port Combination (PBX) - Subsequent Activity			UEPPX	USAS2	0.00	0.00	0.00								
	PBX Subsequent Activity - Change/Rearrange Multiline Hunt Group						7.32	7.32								
	Unbundled Miscellaneous Rate Element, Tag Loop at End User Premise			UEPPX	URETL		8.33	0.83								
OFF/ON PREMISES EXTENSION CHANNELS																
	Local Channel Voice grade, per termination		1	UEPPX	P2JHX	14.38	88.00	55.00	47.24	7.44						
	Local Channel Voice grade, per termination		2	UEPPX	P2JHX	22.85	88.00	55.00	47.24	7.44						
	Local Channel Voice grade, per termination		3	UEPPX	P2JHX	36.14	88.00	55.00	47.24	7.44						
	Non-Wire Direct Serve Channel Voice Grade		1	UEPPX	SDD2X	22.41	131.60	61.92	90.50	13.40						
	Non-Wire Direct Serve Channel Voice Grade		2	UEPPX	SDD2X	23.88	131.60	61.92	90.50	13.40						
	Non-Wire Direct Serve Channel Voice Grade		3	UEPPX	SDD2X	33.72	131.60	61.92	90.50	13.40						
INTEROFFICE TRANSPORT																
	Interoffice Transport - Dedicated - 2 Wire Voice Grade - Facility Termination			UEPPX	U1TV2	21.13	40.54	27.41	16.74	6.90						
	Interoffice Transport - Dedicated - 2 Wire Voice Grade - Per Mile or Fraction Mile			UEPPX	U1TVM	0.008838	0.00	0.00								
2-WIRE VOICE GRADE LOOP WITH 2-WIRE ANALOG LINE COIN PORT																
UNE Port/Loop Combination Rates																
	2-Wire VG Coin Port/Loop Combo – Zone 1		1			12.70										
	2-Wire VG Coin Port/Loop Combo – Zone 2		2			21.19										
	2-Wire VG Coin Port/Loop Combo – Zone 3		3			34.80										
UNE Loop Rates																
	2-Wire Voice Grade Loop (SL1) - Zone 1		1	UEPCO	UEPLX	11.55										
	2-Wire Voice Grade Loop (SL1) - Zone 2		2	UEPCO	UEPLX	20.04										
	2-Wire Voice Grade Loop (SL1) - Zone 3		3	UEPCO	UEPLX	33.65										
2-Wire Voice Grade Line Ports (COIN)																
	2-Wire Coin 2-Way without Operator Screening and without Blocking (AL, KY, LA, MS)			UEPCO	UEPRF	1.15	40.19	19.83	24.91	6.63						
	2-Wire Coin 2-Way with Operator Screening (AL, KY)			UEPCO	UEPRE	1.15	40.19	19.83	24.91	6.63						
	2-Wire Coin 2-Way with Operator Screening and Blocking: 011, 900/976, 1+DDD (AL, KY, LA, MS)			UEPCO	UEPRA	1.15	40.19	19.83	24.91	6.63						

UNBUNDLED NETWORK ELEMENTS - Alabama														Attachment: 2		Exhibit: A	
CATEGORY		RATE ELEMENTS	Interim	Zone	BCS	USOC	RATES ($)					Svc Order Submitted Elec per LSR	Svc Order Submitted Manually per LSR	Incremental Charge - Manual Svc Order vs. Electronic-1st	Incremental Charge - Manual Svc Order vs. Electronic-Add'l	Incremental Charge - Manual Svc Order vs. Electronic-Disc 1st	Incremental Charge - Manual Svc Order vs. Electronic-Disc Add'l
							Rec	Nonrecurring		Nonrecurring Disconnect		OSS Rates ($)					
								First	Add'l	First	Add'l	SOMEC	SOMAN	SOMAN	SOMAN	SOMAN	SOMAN
		2-Wire Coin 2-Way with Operator Screening and 011 Blocking (AL, LA, MS)			UEPCO	UEPRB	1.15	40.19	19.83	24.91	6.63						
		2-Wire Coin 2-Way with Operator Screening & Blocking: 900/976, 1+DDD, 011+, & Local (AL, KY, LA, MS)			UEPCO	UEPCD	1.15	40.19	19.83	24.91	6.63						
		2-Wire Coin Outward with Operator Screening and 011 Blocking (AL, FL)			UEPCO	UEPRK	1.15	40.19	19.83	24.91	6.63						
		2-Wire Coin Outward with Operator Screening and Blocking: 011, 900/976, 1+DDD (AL, KY, LA, MS)			UEPCO	UEPRH	1.15	40.19	19.83	24.91	6.63						
		2-Wire Coin Outward Operator Screening & Blocking: 900/976, 1+DDD, 011+, and Local (AL, KY, LA, MS)			UEPCO	UEPCN	1.15	40.19	19.83	24.91	6.63						
		2-Wire 2-Way Smartline with 900/976 (all states except LA)			UEPCO	UEPCK	1.15	40.19	19.83	24.91	6.63						
		2-Wire Coin Outward Smartline with 900/976 (all states except LA)			UEPCO	UEPCR	1.15	40.19	19.83	24.91	6.63						
	ADDITIONAL UNE COIN PORT/LOOP (RC)																
		UNE Coin Port/Loop Combo Usage (Flat Rate)			UEPCO	URECU	1.56	0.00	0.00	0.00	0.00						
	LOCAL NUMBER PORTABILITY																
		Local Number Portability (1 per port)			UEPCO	LNPCX	0.35										
	NONRECURRING CHARGES - CURRENTLY COMBINED																
		2-Wire Voice Grade Loop / Line Port Combination - Conversion - Switch-as-is			UEPCO	USAC2		0.10	0.10								
		2-Wire Voice Grade Loop / Line Port Combination - Conversion - Switch with change			UEPCO	USACC		0.10	0.10								
	ADDITIONAL NRCs																
		2-Wire Voice Grade Loop/Line Port Combination - Subsequent Activity			UEPCO	USAS2		0.00	0.00								
		Unbundled Miscellaneous Rate Element, Tag Loop at End User Premise			UEPCO	URETL		8.33	0.83								
	2-WIRE VOICE LOOP/ 2WIRE VOICE GRADE IO TRANSPORT/ 2-WIRE LINE PORT (RES)																
	UNE Port/Loop Combination Rates																
		2-Wire VG Loop/IO Tranport/Port Combo - Zone 1		1			15.76										
		2-Wire VG Loop/IO Tranport/Port Combo - Zone 2		2			24.23										
		2-Wire VG Loop/IO Tranport/Port Combo - Zone 3		3			37.52										
	UNE Loop Rates																
		2-Wire Voice Grade Loop (SL2) - Zone 1		1	UEPFR	UECF2	14.38										
		2-Wire Voice Grade Loop (SL2) - Zone 2		2	UEPFR	UECF2	22.85										
		2-Wire Voice Grade Loop (SL2) - Zone 3		3	UEPFR	UECF2	36.14										
	2-Wire Voice Grade Line Port Rates (Res)																
		2-Wire voice unbundled port - residence			UEPFR	UEPRL	1.38	90.38	57.27	48.66	8.77						
		2-Wire voice unbundled port with Caller ID - res			UEPFR	UEPRC	1.38	90.38	57.27	48.66	8.77						
		2-Wire voice unbundled port outgoing only - res			UEPFR	UEPRO	1.38	90.38	57.27	48.66	8.77						
		2-Wire voice Grade unbundled Alabama extended local dialing parity port with Caller ID - res			UEPFR	UEPAR	1.38	90.38	57.27	48.66	8.77						
		2-Wire voice unbundles res, low usage line port with Caller ID (LUM)			UEPFR	UEPAP	1.38	90.38	57.27	48.66	8.77						
		2-Wire Voice Unbundled Alabama Residence Dialing Plan without Caller ID			UEPFR	UEPWA	1.38	90.38	57.27	48.66	8.77						
	INTEROFFICE TRANSPORT																
		Interoffice Transport - Dedicated - 2 Wire Voice Grade - Facility Termination			UEPFR	U1TV2	21.13	40.54	27.41	16.74	6.90						
		Interoffice Transport - Dedicated - 2 Wire Voice Grade - Per Mile or Fraction Mile			UEPFR	1L5XX	0.008838										
	FEATURES																
		All Features Offered			UEPFR	UEPVF	1.98	0.00	0.00								
	LOCAL NUMBER PORTABILITY																
		Local Number Portability (1 per port)			UEPFR	LNPCX	0.35										
	NONRECURRING CHARGES (NRCs) - CURRENTLY COMBINED																
		2-Wire Loop / Dedicated IO Transport / 2 Wire Line Port Combination - Conversion - Switch-as-is			UEPFR	USAC2		8.48	1.87								

UNBUNDLED NETWORK ELEMENTS - Alabama													Attachment: 2		Exhibit: A	
CATEGORY	RATE ELEMENTS	Interim	Zone	BCS	USOC	RATES ($)					Svc Order Submitted Elec per LSR	Svc Order Submitted Manually per LSR	Incremental Charge - Manual Svc Order vs. Electronic-1st	Incremental Charge - Manual Svc Order vs. Electronic-Add'l	Incremental Charge - Manual Svc Order vs. Electronic-Disc 1st	Incremental Charge - Manual Svc Order vs. Electronic-Disc Add'l
						Rec	Nonrecurring		Nonrecurring Disconnect		OSS Rates ($)					
							First	Add'l	First	Add'l	SOMEC	SOMAN	SOMAN	SOMAN	SOMAN	SOMAN
	2-Wire Loop / Dedicated IO Transport / 2 Wire Line Port Combination - Conversion - Switch-With-Change			UEPFR	USACC		8.48	1.87								
	Unbundled Miscellaneous Rate Element, Tag Designed Loop at End User Premise			UEPFR	URETN		11.21	1.10								
2-WIRE VOICE LOOP/ 2WIRE VOICE GRADE IO TRANSPORT/ 2-WIRE LINE PORT (BUS)																
UNE Port/Loop Combination Rates																
	2-Wire VG Loop/IO Tranport/Port Combo - Zone 1		1			15.76										
	2-Wire VG Loop/IO Tranport/Port Combo - Zone 2		2			24.23										
	2-Wire VG Loop/IO Tranport/Port Combo - Zone 3		3			37.52										
UNE Loop Rates																
	2-Wire Voice Grade Loop (SL2) - Zone 1		1	UEPFB	UECF2	14.38										
	2-Wire Voice Grade Loop (SL2) - Zone 2		2	UEPFB	UECF2	22.85										
	2-Wire Voice Grade Loop (SL2) - Zone 3		3	UEPFB	UECF2	36.14										
2-Wire Voice Grade Line Port (Bus)																
	2-Wire voice unbundled port without Caller ID - bus			UEPFB	UEPBL	1.38	90.38	57.27	48.66	8.77						
	2-Wire voice unbundled port with Caller + E484 ID - bus			UEPFB	UEPBC	1.38	90.38	57.27	48.66	8.77						
	2-Wire voice unbundled port outgoing only - bus			UEPFB	UEPBO	1.38	90.38	57.27	48.66	8.77						
	2-Wire voice Grade unbundled Alabama extended local dialing parity port with Caller ID - bus			UEPFB	UEPAW	1.38	90.38	57.27	48.66	8.77						
	2-Wire voice unbundled incoming only port with Caller ID - Bus			UEPFB	UEPB1	1.38	90.38	57.27	48.66	8.77						
	2-Wire Voice Unbundled Alabama Business Dialing Plan without Caller ID			UEPFB	UEPWB	1.38	90.38	57.27	48.66	8.77						
LOCAL NUMBER PORTABILITY																
	Local Number Portability (1 per port)			UEPFB	LNPCX	0.35										
INTEROFFICE TRANSPORT																
	Interoffice Transport - Dedicated - 2 Wire Voice Grade - Facility Termination			UEPFB	U1TV2	21.13	40.54	27.41	16.74	6.90						
	Interoffice Transport - Dedicated - 2 Wire Voice Grade - Per Mile or Fraction Mile			UEPFB	1L5XX	0.008838										
FEATURES																
	All Features Offered			UEPFB	UEPVF	1.98	0.00	0.00								
NONRECURRING CHARGES (NRCs) - CURRENTLY COMBINED																
	2-Wire Loop / Dedicated IO Transport / 2 Wire Line Port Combination - Conversion - Switch-as-is			UEPFB	USAC2		8.48	1.87								
	2-Wire Loop / Dedicated IO Transport / 2 Wire Line Port Combination - Conversion - Switch with change			UEPFB	USACC		8.48	1.87								
	Unbundled Miscellaneous Rate Element, Tag Designed Loop at End User Premise			UEPFB	URETN		11.21	1.10								
2-WIRE VOICE LOOP/ 2WIRE VOICE GRADE IO TRANSPORT/ 2-WIRE LINE PORT (PBX)																
UNE Port/Loop Combination Rates																
	2-Wire VG Loop/IO Tranport/Port Combo - Zone 1		1			15.76										
	2-Wire VG Loop/IO Tranport/Port Combo - Zone 2		2			24.23										
	2-Wire VG Loop/IO Tranport/Port Combo - Zone 3		3			37.52										
UNE Loop Rates																
	2-Wire Voice Grade Loop (SL2) - Zone 1		1	UEPFP	UECF2	14.38										
	2-Wire Voice Grade Loop (SL2) - Zone 2		2	UEPFP	UECF2	22.85										
	2-Wire Voice Grade Loop (SL2) - Zone 3		3	UEPFP	UECF2	36.14										
2-Wire Voice Grade Line Port Rates (BUS - PBX)																
	Line Side Unbundled Combination 2-Way PBX Trunk Port - Bus			UEPFP	UEPPC	1.38	119.27	69.85	61.18	8.34						
	Line Side Unbundled Outward PBX Trunk Port - Bus			UEPFP	UEPPO	1.38	119.27	69.85	61.18	8.34						
	Line Side Unbundled Incoming PBX Trunk Port - Bus			UEPFP	UEPP1	1.38	119.27	69.85	61.18	8.34						
	2-Wire Voice Unbundled 2-Way Combination PBX Alabama Calling Port			UEPFP	UEPA2	1.38	119.27	69.85	61.18	8.34						
	2-Wire Voice Unbundled PBX LD Terminal Ports			UEPFP	UEPLD	1.38	119.27	69.85	61.18	8.34						
	2-Wire Voice Unbundled 2-Way Combination PBX Usage Port			UEPFP	UEPXA	1.38	119.27	69.85	61.18	8.34						
	2-Wire Voice Unbundled PBX Toll Terminal Hotel Ports			UEPFP	UEPXB	1.38	119.27	69.85	61.18	8.34						
	2-Wire Voice Unbundled PBX LD DDD Terminals Port			UEPFP	UEPXC	1.38	119.27	69.85	61.18	8.34						
	2-Wire Voice Unbundled PBX LD Terminal Switchboard Port			UEPFP	UEPXD	1.38	119.27	69.85	61.18	8.34						

UNBUNDLED NETWORK ELEMENTS - Alabama														Attachment: 2		Exhibit: A	
CATEGORY	RATE ELEMENTS	Interim	Zone	BCS	USOC	RATES ($)					Svc Order Submitted Elec per LSR	Svc Order Submitted Manually per LSR	Incremental Charge - Manual Svc Order vs. Electronic-1st	Incremental Charge - Manual Svc Order vs. Electronic-Add'l	Incremental Charge - Manual Svc Order vs. Electronic-Disc 1st	Incremental Charge - Manual Svc Order vs. Electronic-Disc Add'l
						Rec	Nonrecurring		Nonrecurring Disconnect		OSS Rates ($)					
							First	Add'l	First	Add'l	SOMEC	SOMAN	SOMAN	SOMAN	SOMAN	SOMAN
	2-Wire Voice Unbundled PBX LD Terminal Switchboard IDD Capable Port			UEPFP	UEPXE	1.38	119.27	69.85	61.18	8.34						
	2-Wire Voice Unbundled 2-Way PBX Hotel/Hospital Economy Administrative Calling Port			UEPFP	UEPXL	1.38	119.27	69.85	61.18	8.34						
	2-Wire Voice Unbundled 2-Way PBX Hotel/Hospital Economy Room Calling Port			UEPFP	UEPXM	1.38	119.27	69.85	61.18	8.34						
	2-Wire Voice Unbundled 1-Way Outgoing PBX Hotel/Hospital Discount Room Calling Port			UEPFP	UEPXO	1.38	119.27	69.85	61.18	8.34						
	2-Wire Voice Unbundled 1-Way Outgoing PBX Measured Port			UEPFP	UEPXS	1.38	119.27	69.85	61.18	8.34						
LOCAL NUMBER PORTABILITY																
	Local Number Portability (1 per port)			UEPFP	LNPCP	3.15	0.00	0.00								
INTEROFFICE TRANSPORT																
	Interoffice Transport - Dedicated - 2 Wire Voice Grade - Facility Termination			UEPFP	U1TV2	21.13	40.54	27.41	16.74	6.90						
	Interoffice Transport - Dedicated - 2 Wire Voice Grade - Per Mile or Fraction Mile			UEPFP	1L5XX	0.008838										
FEATURES																
	All Features Offered			UEPFP	UEPVF	1.98	0.00	0.00								
NONRECURRING CHARGES (NRCs) - CURRENTLY COMBINED																
	2-Wire Loop / Dedicated IO Transport / 2 Wire Line Port Combination - Conversion - Switch-as-is			UEPFP	USAC2		8.48	1.87								
	2-Wire Loop / Dedicated IO Transport / 2 Wire Line Port Combination - Conversion - Switch with change			UEPFP	USACC		8.48	1.87								
	Unbundled Miscellaneous Rate Element, Tag Designed Loop at End User Premise			UEPFP	URETN		11.21	1.10								
UNBUNDLED PORT/LOOP COMBINATIONS - COST BASED RATES																
2-WIRE VOICE GRADE LOOP- BUS ONLY - WITH 2-WIRE DID TRUNK PORT																
UNE Port/Loop Combination Rates																
	2-Wire VG Loop/2-Wire DID Trunk Port Combo - UNE Zone 1		1			22.40										
	2-Wire VG Loop/2-Wire DID Trunk Port Combo - UNE Zone 2		2			30.88										
	2-Wire VG Loop/2-Wire DID Trunk Port Combo - UNE Zone 3		3			44.17										
UNE Loop Rates																
	2-Wire Analog Voice Grade Loop - (SL2) - UNE Zone 1		1	UEPPX	UECD1	14.38										
	2-Wire Analog Voice Grade Loop - (SL2) - UNE Zone 2		2	UEPPX	UECD1	22.85										
	2-Wire Analog Voice Grade Loop - (SL2) - UNE Zone 3		3	UEPPX	UECD1	36.14										
UNE Port Rate																
	Exchange Ports - 2-Wire DID Port			UEPPX	UEPD1	8.02	207.31	73.74	107.14	11.20						
NONRECURRING CHARGES - CURRENTLY COMBINED																
	2-Wire Voice Grade Loop / 2-Wire DID Trunk Port Combination - Switch-as-is			UEPPX	USAC1		7.31	1.87								
	2-Wire Voice Grade Loop / 2-Wire DID Trunk Port Conversion with BellSouth Allowable Changes			UEPPX	USA1C		7.31	1.87								
ADDITIONAL NRCs																
	2-Wire DID Subsequent Activity - Add Trunks, Per Trunk			UEPPX	USAS1		26.78	26.78								
	Unbundled Miscellaneous Rate Element, Tag Designed Loop at End User Premise			UEPPX	URETN		11.21	1.10								
Telephone Number/Trunk Group Establisment Charges																
	DID Trunk Termination (One Per Port)			UEPPX	NDT	0.00	0.00	0.00								
	Additional DID Numbers for each Group of 20 DID Numbers			UEPPX	ND4	0.00	0.00	0.00								
	DID Numbers, Non- consecutive DID Numbers , Per Number			UEPPX	ND5	0.00	0.00	0.00								
	Reserve Non-Consecutive DID numbers			UEPPX	ND6	0.00	0.00	0.00								
	Reserve DID Numbers			UEPPX	NDV	0.00	0.00	0.00								
LOCAL NUMBER PORTABILITY																
	Local Number Portability (1 per port)			UEPPX	LNPCP	3.15	0.00	0.00								
2-WIRE ISDN DIGITAL GRADE LOOP WITH 2-WIRE ISDN DIGITAL LINE SIDE PORT																
UNE Port/Loop Combination Rates																
	2W ISDN Digital Grade Loop/2W ISDN Digital Line Side Port - UNE Zone 1		1	UEPPB UEPPR		27.28										

UNBUNDLED NETWORK ELEMENTS - Alabama														Attachment: 2		Exhibit: A	
CATEGORY	RATE ELEMENTS	Interim	Zone	BCS	USOC	RATES ($)					Svc Order Submitted Elec per LSR	Svc Order Submitted Manually per LSR	Incremental Charge - Manual Svc Order vs. Electronic-1st	Incremental Charge - Manual Svc Order vs. Electronic-Add'l	Incremental Charge - Manual Svc Order vs. Electronic-Disc 1st	Incremental Charge - Manual Svc Order vs. Electronic-Disc Add'l
						Rec	Nonrecurring		Nonrecurring Disconnect		OSS Rates ($)					
							First	Add'l	First	Add'l	SOMEC	SOMAN	SOMAN	SOMAN	SOMAN	SOMAN
	2W ISDN Digital Grade Loop/2W ISDN Digital Line Side Port - UNE Zone 2		2	UEPPB UEPPR		37.86										
	2W ISDN Digital Grade Loop/2W ISDN Digital Line Side Port - UNE Zone 3		3	UEPPB UEPPR		53.84										
UNE Loop Rates																
	2-Wire ISDN Digital Grade Loop - UNE Zone 1		1	UEPPB UEPPR	USL2X	19.03										
	2-Wire ISDN Digital Grade Loop - UNE Zone 2		2	UEPPB UEPPR	USL2X	29.62										
	2-Wire ISDN Digital Grade Loop - UNE Zone 3		3	UEPPB UEPPR	USL2X	45.60										
UNE Port Rate																
	Exchange Port - 2-Wire ISDN Line Side Port			UEPPB UEPPR	UEPPB	8.24	190.01	132.76	100.67	21.28						
NONRECURRING CHARGES - CURRENTLY COMBINED																
	2-Wire ISDN Digital Grade Loop / 2-Wire ISDN Line Side Port Combination - Conversion			UEPPB UEPPR	USACB	0.00	38.51	27.02								
ADDITIONAL NRCs																
	Unbundled Miscellaneous Rate Element, Tag Designed Loop at End User Premise			UEPPB UEPPR	URETN		11.21	1.10								
	Unbundled Miscellaneous Rate Element, Tag Loop at End User Premise			UEPPB UEPPR	URETL		8.33	0.83								
LOCAL NUMBER PORTABILITY																
	Local Number Portability (1 per port)			UEPPB UEPPR	LNPCX	0.35	0.00	0.00								
B-CHANNEL USER PROFILE ACCESS:																
	CVS/CSD (DMS/5ESS)			UEPPB UEPPR	U1UCA	0.00	0.00	0.00								
	CVS (EWSD)			UEPPB UEPPR	U1UCB	0.00	0.00	0.00								
	CSD			UEPPB UEPPR	U1UCC	0.00	0.00	0.00								
B-CHANNEL AREA PLUS USER PROFILE ACCESS: (AL,KY,LA,MS SC,MS, & TN)																
	CVS/CSD (DMS/5ESS)			UEPPB UEPPR	U1UCD	0.00	0.00	0.00								
	CVS (EWSD)			UEPPB UEPPR	U1UCE	0.00	0.00	0.00								
	CSD			UEPPB UEPPR	U1UCF	0.00	0.00	0.00								
USER TERMINAL PROFILE																
	User Terminal Profile (EWSD only)			UEPPB UEPPR	U1UMA	0.00	0.00	0.00								
VERTICAL FEATURES																
	All Vertical Features - One per Channel B User Profile			UEPPB UEPPR	UEPVF	1.98	0.00	0.00								
INTEROFFICE CHANNEL MILEAGE																
	Interoffice Channel mileage each, including first mile and facilities termination			UEPPB UEPPR	M1GNC	21.13	40.54	27.41	16.74	6.90						
	Interoffice Channel mileage each, additional mile			UEPPB UEPPR	M1GNM	0.008838	0.00	0.00								
4-WIRE DS1 DIGITAL LOOP WITH 4-WIRE ISDN DS1 DIGITAL TRUNK PORT																
The UNE-P DS1 combination rates below for 4-Wire DS1 Digital Loop with 4-Wire ISDN DS1 Digital Trunk Port in this rate exhibit apply to the embedded base in place as of 10/2/03 until 4/1/04. After 4/1/04 these rates shall revert to tariff rates or a separate agreement.																
Requests for 4-Wire DS1 Digital Loop with 4-Wire ISDN DS1 Digital Trunk Port after the effective date of this amendment shall be provided pursuant to a separate agreement or tariff at BellSouth's discretion.																
UNE Port/Loop Combination Rates																
	4W DS1 Digital Loop/4W ISDN DS1 Digital Trunk Port - UNE Zone 1		1	UEPPP		166.87										
	4W DS1 Digital Loop/4W ISDN DS1 Digital Trunk Port - UNE Zone 2		2	UEPPP		238.50										
	4W DS1 Digital Loop/4W ISDN DS1 Digital Trunk Port - UNE Zone 3		3	UEPPP		398.85										
UNE Loop Rates																
	4-Wire DS1 Digital Loop - UNE Zone 1		1	UEPPP	USL4P	82.55										
	4-Wire DS1 Digital Loop - UNE Zone 2		2	UEPPP	USL4P	154.18										
	4-Wire DS1 Digital Loop - UNE Zone 3		3	UEPPP	USL4P	314.52										
UNE Port Rate																
	Exchange Ports - 4-Wire ISDN DS1 Port (E:4/1/2004)			UEPPP	UEPPP	84.32	456.28	259.10	123.88	31.77						
NONRECURRING CHARGES - CURRENTLY COMBINED																
	4-Wire DS1 Digital Loop / 4-Wire ISDN DS1 Digital Trunk Port Combination - Conversion -Switch-as-is (E:4/1/2004)			UEPPP	USACP	0.00	119.07	78.56								
ADDITIONAL NRCs																

CATEGORY	RATE ELEMENTS	Interim	Zone	BCS	USOC	RATES ($) Rec	Nonrecurring First	Nonrecurring Add'l	Nonrecurring Disconnect First	Nonrecurring Disconnect Add'l	Svc Order Submitted Elec per LSR	Svc Order Submitted Manually per LSR	Attachment: 2 Incremental Charge - Manual Svc Order vs. Electronic- 1st	Attachment: 2 Incremental Charge - Manual Svc Order vs. Electronic- Add'l	Exhibit: A Incremental Charge - Manual Svc Order vs. Electronic- Disc 1st	Exhibit: A Incremental Charge - Manual Svc Order vs. Electronic- Disc Add'l
											OSS Rates ($)					
											SOMEC	SOMAN	SOMAN	SOMAN	SOMAN	SOMAN
	4-Wire DS1 Loop/4-W ISDN Digtl Trk Port - Subsqt Actvy-Inward/two way Tel Nos. (except NC)			UEPPP	PR7TF		0.49									
	4-Wire DS1 Loop / 4-Wire ISDN DS1 Digital Trunk Port - Outward Tel Numbers (All States except NC)			UEPPP	PR7TO		11.51									
	4-Wire DS1 Loop / 4-Wire ISDN DS1 Digital Trk Port - Subsequent Inward Tel Numbers			UEPPP	PR7ZT		23.02									
LOCAL NUMBER PORTABILITY																
	Local Number Portability (1 per port)			UEPPP	LNPCN	1.75										
INTERFACE (Provsioning Only)																
	Voice/Data			UEPPP	PR71V	0.00	0.00	0.00								
	Digital Data			UEPPP	PR71D	0.00	0.00	0.00								
	Inward Data			UEPPP	PR71E	0.00	0.00	0.00								
New or Additional "B" Channel																
	New or Additional - Voice/Data B Channel			UEPPP	PR7BV	0.00	14.53									
	New or Additional - Digital Data B Channel			UEPPP	PR7BF	0.00	14.53									
	New or Additional Inward Data B Channel			UEPPP	PR7BD	0.00	14.53									
CALL TYPES																
	Inward			UEPPP	PR7C1	0.00	0.00	0.00								
	Outward			UEPPP	PR7CO	0.00	0.00	0.00								
	Two-way			UEPPP	PR7CC	0.00	0.00	0.00								
Interoffice Channel Mileage																
	Fixed Each Including First Mile			UEPPP	1LN1A	60.34	89.27	81.81	16.35	14.44						
	Each Airline-Fractional Additional Mile			UEPPP	1LN1B	0.18										
4-WIRE DS1 DIGITAL LOOP WITH 4-WIRE DDITS TRUNK PORT																
The UNE-P DS1 combination rates below for 4-Wire DS1 Digital Loop with 4-Wire DDITS Trunk Port in this rate exhibit apply to the embedded base in place as of 10/2/03 until 4/1/04. After 4/1/04 these rates shall revert to tariff rates or a separate agreement.																
Requests for 4-Wire DS1 Digital Loop with 4-Wire DDITS after the effective date of this amendment shall be provided pursuant to a separate agreement or tariff at BellSouth's discretion.																
UNE Port/Loop Combination Rates																
	4W DS1 Digital Loop/4W DDITS Trunk Port - UNE Zone 1		1	UEPDC		142.64										
	4W DS1 Digital Loop/4W DDITS Trunk Port - UNE Zone 2		2	UEPDC		214.26										
	4W DS1 Digital Loop/4W DDITS Trunk Port - UNE Zone 3		3	UEPDC		374.61										
UNE Loop Rates																
	4-Wire DS1 Digital Loop - UNE Zone 1		1	UEPDC	USLDC	82.55										
	4-Wire DS1 Digital Loop - UNE Zone 2		2	UEPDC	USLDC	154.18										
	4-Wire DS1 Digital Loop - UNE Zone 3		3	UEPDC	USLDC	314.52										
UNE Port Rate																
	4-Wire DDITS Digital Trunk Port (E:4/1/2004)			UEPDC	UDD1T	60.09	454.49	253.23	117.29	14.17						
NONRECURRING CHARGES - CURRENTLY COMBINED																
	4-Wire DS1 Digital Loop / 4-Wire DDITS Trunk Port Combination - Switch-as-is (E:4/1/2004)			UEPDC	USAC4		129.49	67.02								
	4-Wire DS1 Digital Loop / 4-Wire DDITS Trunk Port Combination - Conversion with DS1 Changes (E:4/1/2004)			UEPDC	USAWA		129.49	67.02								
	4-Wire DS1 Digital Loop / 4-Wire DDITS Trunk Port Combination - Conversion with Change - Trunk (E:4/1/2004)			UEPDC	USAWB		129.49	67.02								
ADDITIONAL NRCs																
	4-Wire DS1 Loop / 4-Wire DDITS Trunk Port - NRC - Subsequent Channel Activation/Chan - 2-Way Trunk			UEPDC	UDTTA		14.48	14.48								
	4-Wire DS1 Loop / 4-Wire DDITS Trunk Port - Subsequent Channel Activation/Chan - 1-Way Outward Trunk			UEPDC	UDTTB		14.48	14.48								
	4-Wire DS1 Loop / 4-Wire DDITS Trunk Port - Subsqnt Channel Activation/Chan Inward Trunk w/out DID			UEPDC	UDTTC		14.48	14.48								
	4-Wire DS1 Loop / 4-Wire DDITS Trunk Port - Subsqnt Chan Activation Per Chan - Inward Trunk with DID			UEPDC	UDTTD		14.48	14.48								
	4-Wire DS1 Loop / 4-Wire DDITS Trunk Port - Subsqnt Chan Activation / Chan - 2-Way DID w User Trans			UEPDC	UDTTE		14.48	14.48								
BIPOLAR 8 ZERO SUBSTITUTION																
	B8ZS -Superframe Format			UEPDC	CCOSF		0.00i	600.00s								
	B8ZS - Extended Superframe Format			UEPDC	CCOEF		0.00i	600.00s								
Alternate Mark Inversion																
	AMI -Superframe Format			UEPDC	MCOSF		0.00	0.00								

UNBUNDLED NETWORK ELEMENTS - Alabama														Attachment: 2		Exhibit: A	
CATEGORY	RATE ELEMENTS	Interim	Zone	BCS	USOC	RATES ($)					Svc Order Submitted Elec per LSR	Svc Order Submitted Manually per LSR	Incremental Charge - Manual Svc Order vs. Electronic-1st	Incremental Charge - Manual Svc Order vs. Electronic-Add'l	Incremental Charge - Manual Svc Order vs. Electronic-Disc 1st	Incremental Charge - Manual Svc Order vs. Electronic-Disc Add'l
						Rec	Nonrecurring		Nonrecurring Disconnect		OSS Rates ($)					
							First	Add'l	First	Add'l	SOMEC	SOMAN	SOMAN	SOMAN	SOMAN	SOMAN
	AMI - Extended SuperFrame Format			UEPDC	MCOPO		0.00	0.00								
	Telephone Number/Trunk Group Establisment Charges															
	Telephone Number for 2-Way Trunk Group			UEPDC	UDTGX	0.00										
	Telephone Number for 1-Way Outward Trunk Group			UEPDC	UDTGY	0.00										
	Telephone Number for 1-Way Inward Trunk Group Without DID			UEPDC	UDTGZ	0.00										
	DID Numbers for each Group of 20 DID Numbers			UEPDC	ND4	0.00	0.00									
	DID Numbers, Non- consecutive DID Numbers , Per Number			UEPDC	ND5	0.00										
	Reserve Non-Consecutive DID Nos.			UEPDC	ND6	0.00	0.00	0.00								
	Reserve DID Numbers			UEPDC	NDV	0.00	0.00	0.00								
	Dedicated DS1 (Interoffice Channel Mileage) - FX/FCO for 4-Wire DS1 Digital Loop with 4-Wire DDITS Trunk Port															
	Interoffice Channel Mileage - Fixed rate 0-8 miles (Facilities Termination)			UEPDC	1LNO1	60.16	89.27	81.81	16.35	14.44						
	Interoffice Channel Mileage - Additional rate per mile - 0-8 miles			UEPDC	1LNOA	0.18	0.00	0.00								
	Interoffice Channel Mileage - Fixed rate 9-25 miles (Facilities Termination)			UEPDC	1LNO2	0.00	0.00	0.00								
	Interoffice Channel Mileage - Additional rate per mile - 9-25 miles			UEPDC	1LNOB	0.18	0.00	0.00								
	Interoffice Channel Mileage - Fixed rate 25+ miles (Facilities Termination)			UEPDC	1LNO3	0.00	0.00	0.00	0.00							
	Interoffice Channel Mileage - Additional rate per mile - 25+ miles			UEPDC	1LNOC	0.18	0.00	0.00								
	Local Number Portability, per DS0 Activated			UEPDC	LNPCP	3.15	0.00	0.00	0.00							
	Central Office Termininating Point			UEPDC	CTG	0.00										
	4-WIRE DS1 LOOP WITH CHANNELIZATION WITH PORT															
	System is 1 DS1 Loop, 1 D4 Channel Bank, and up to 24 Feature Activations															
	Each System can have up to 24 combinations of rates depending on type and number of ports used															
	The UNE-P DS1 combination rates below for 4-Wire DS1 Loop with Channelization with Port in this rate exhibit apply to the embedded base in place as of 10/2/03 until 4/1/04. After 4/1/04 these rates shall revert to tariff rates or a separate agreement.															
	Requests for 4-Wire DS1 Loop with Channelization with Port after the effective date of this amendment shall be provided pursuant to a separate agreement or tariff at BellSouth's discretion.															
	UNE DS1 Loop															
	4-Wire DS1 Loop - UNE Zone 1		1	UEPMG	USLDC	82.55	0.00	0.00								
	4-Wire DS1 Loop - UNE Zone 2		2	UEPMG	USLDC	154.18	0.00	0.00								
	4-Wire DS1 Loop - UNE Zone 3		3	UEPMG	USLDC	314.52	0.00	0.00								
	UNE DSO Channelization Capacities (D4 Channel Bank Configurations)															
	24 DSO Channel Capacity - 1 per DS1			UEPMG	VUM24	101.40	0.00	0.00								
	48 DSO Channel Capacity - 1 per 2 DS1s			UEPMG	VUM48	202.80	0.00	0.00								
	96 DSO Channel Capacity -1per 4 DS1s			UEPMG	VUM96	405.60	0.00	0.00								
	144 DS0 Channel Capacity - 1 per 6 DS1s			UEPMG	VUM14	608.40	0.00	0.00								
	192 DS0 Channel Capacity -1 per 8 DS1s			UEPMG	VUM19	811.20	0.00	0.00								
	240 DS0 Channel Capacity - 1 per 10 DS1s			UEPMG	VUM2O	1,014.00	0.00	0.00								
	288 DS0 Channel Capacity - 1 per 12 DS1s			UEPMG	VUM28	1,216.80	0.00	0.00								
	384 DS0 Channel Capacity - 1 per 16 DS1s			UEPMG	VUM38	1,622.40	0.00	0.00								
	480 DS0 Channel Capacity - 1 per 20 DS1s			UEPMG	VUM4O	2,028.00	0.00	0.00								
	576 DS0 Channel Capacity -1 per 24 DS1s			UEPMG	VUM57	2,433.60	0.00	0.00								
	672 DS0 Channel Capacity - 1 per 28 DS1s			UEPMG	VUM67	2,839.20	0.00	0.00								
	Non-Recurring Charges (NRC) Associated with 4-Wire DS1 Loop with Channeliztion with Port - Conversion Charge Based on a System															
	A Minimum System configuration is One (1) DS1, One (1) D4 Channel Bank, and Up To 24 DSO Ports with Feature Activations.															
	Multiples of this configuration functioning as one are considered Add'l after the minimum system configuration is counted.															
	NRC - Conversion (Currently Combined) with or without BellSouth Allowed Changes			UEPMG	USAC4	0.00	150.48	8.36								
	System Additions at End User Locations Where 4-Wire DS1 Loop with Channelization with Port Combination Currently Exists and															
	New (Not Currently Combined) in all states, except in Density Zone 1 of Top 8 MSA's															
	1 DS1/D4 Channel Bank - Additionally Add NRC for each Port and Assoc Fea Activation (E:4/1/2004)			UEPMG	VUMD4	0.00	716.11	468.04	148.75	17.65						
	Bipolar 8 Zero Substitution															
	Clear Channel Capability Format, superframe - Subsequent Activity Only			UEPMG	CCOSF	0.00	0.00i	600.00s								
	Clear Channel Capability Format - Extended Superframe - Subsequent Activity Only			UEPMG	CCOEF	0.00	0.00i	600.00s								

UNBUNDLED NETWORK ELEMENTS - Alabama														Attachment: 2		Exhibit: A	
CATEGORY		RATE ELEMENTS	Interim	Zone	BCS	USOC	RATES ($)					Svc Order Submitted Elec per LSR	Svc Order Submitted Manually per LSR	Incremental Charge - Manual Svc Order vs. Electronic-1st	Incremental Charge - Manual Svc Order vs. Electronic-Add'l	Incremental Charge - Manual Svc Order vs. Electronic-Disc 1st	Incremental Charge - Manual Svc Order vs. Electronic-Disc Add'l
							Rec	Nonrecurring		Nonrecurring Disconnect		OSS Rates ($)					
								First	Add'l	First	Add'l	SOMEC	SOMAN	SOMAN	SOMAN	SOMAN	SOMAN
	Alternate Mark Inversion (AMI)																
		Superframe Format			UEPMG	MCOSF	0.00	0.00	0.00								
		Extended Superframe Format			UEPMG	MCOPO	0.00	0.00	0.00								
	Exchange Ports Associated with 4-Wire DS1 Loop with Channelization with Port																
	Exchange Ports																
		Line Side Combination Channelized PBX Trunk Port - Business (E:4/1/2004)			UEPPX	UEPCX	1.15	0.00	0.00	0.00	0.00						
		Line Side Outward Channelized PBX Trunk Port - Business (E:4/1/2004)			UEPPX	UEPOX	1.15	0.00	0.00	0.00	0.00						
		Line Side Inward Only Channelized PBX Trunk Port without DID (E:4/1/2004)			UEPPX	UEP1X	1.15	0.00	0.00	0.00	0.00						
		2-Wire Trunk Side Unbundled Channelized DID Trunk Port (E:4/1/2004)			UEPPX	UEPDM	8.05	0.00	0.00	0.00	0.00						
		Unbundled Exchange Ports, 2-Wire Channelized – Outdial – (AL, KY, LA, MS, & TN)(Conversion from Network Access Service) (E:4/1/2004)			UEPPX	UEPCY	1.15										
		Unbundled Exchange Ports, 2-Wire Channelized – Combination (AL, KY, LA, MS, & TN) (Conversion from Network Access Service) (E:4/1/2004)			UEPPX	UEPCT	1.15										
		2-Wire Channelized PBX Area Calling Service Combination Port (AL Only) (E:4/1/2004)			UEPPX	UEPA4	1.15	0.00	0.00								
		2 Wire Channelized PBX Area Calling Service Outgoing Only Port (AL Only) (E:4/1/2004)			UEPPX	UEPA3	1.15	0.00	0.00								
	Feature Activations - Unbundled Loop Concentration																
		Feature (Service) Activation for each Line Port Terminated in D4 Bank			UEPPX	1PQWM	0.56	54.55									
		Feature (Service) Activation for each Trunk Port Terminated in D4 Bank			UEPPX	1PQWU	0.56	77.03									
	Telephone Number/ Group Establishment Charges for DID Service																
		DID Trunk Termination (1 per Port)			UEPPX	NDT	0.00	0.00	0.00								
		DID Numbers - groups of 20 - Valid all States			UEPPX	ND4	0.00	0.00	0.00								
		Non-Consecutive DID Numbers - per number			UEPPX	ND5	0.00	0.00	0.00								
		Reserve Non-Consecutive DID Numbers			UEPPX	ND6	0.00	0.00	0.00								
		Reserve DID Numbers			UEPPX	NDV	0.00	0.00	0.00								
	Local Number Portability																
		Local Number Portability - 1 per port			UEPPX	LNPCP	3.15	0.00	0.00								
	FEATURES - Vertical and Optional																
	Local Switching Features Offered with Line Side Ports Only																
		All Features Available			UEPPX	UEPVF	1.98	0.00	0.00								
UNBUNDLED CENTREX PORT/LOOP COMBINATIONS - COST BASED RATES																	
	1. Cost Based Rates are applied where BellSouth is required by FCC and/or State Commission rule to provide Unbundled Local Switching or Switch Ports.																
	2. Features shall apply to the Unbundled Port/Loop Combination - Cost Based Rate section in the same manner as they are applied to the Stand-Alone Unbundled Port section of this Rate Exhibit.																
	3. End Office and Tandem Switching Usage and Common Transport Usage rates in the Port section of this rate exhibit shall apply to all combinations of loop/port network elements except for UNE Coin Port/Loop Combinations.																
	4. The first and additional Port nonrecurring charges apply to Not Currently Combined Combos. For Currently Combined Combos, the nonrecurring charges shall be those identified in the Nonrecurring - Currently Combined sections. Additional NRCs may apply also and are categorized accordingly.																
	5. Market Rates for Unbundled Centrex Port/Loop Combination will be negotiated on an Individual Case Basis, until further notice.																
	UNE-P CENTREX - 1AESS - (Valid in AL,FL,GA,KY,LA,MS,&TN only)																
	2-Wire VG Loop/2-Wire Voice Grade Port (Centrex) Combo																
	UNE Port/Loop Combination Rates (Non-Design)																
		2-Wire VG Loop/2-Wire Voice Grade Port (Centrex) Port Combo - Non-Design		1	UEP91		12.70										
		2-Wire VG Loop/2-Wire Voice Grade Port (Centrex)Port Combo - Non-Design		2	UEP91		21.19										
		2-Wire VG Loop/2-Wire Voice Grade Port (Centrex)Port Combo - Non-Design		3	UEP91		34.80										
	UNE Port/Loop Combination Rates (Design)																
		2-Wire VG Loop/2-Wire Voice Grade Port (Centrex) Port Combo - Design		1	UEP91		15.53										

UNBUNDLED NETWORK ELEMENTS - Alabama														Attachment: 2		Exhibit: A	
CATEGORY		RATE ELEMENTS	Interim	Zone	BCS	USOC	RATES ($)					Svc Order Submitted Elec per LSR	Svc Order Submitted Manually per LSR	Incremental Charge - Manual Svc Order vs. Electronic-1st	Incremental Charge - Manual Svc Order vs. Electronic-Add'l	Incremental Charge - Manual Svc Order vs. Electronic-Disc 1st	Incremental Charge - Manual Svc Order vs. Electronic-Disc Add'l
							Rec	Nonrecurring		Nonrecurring Disconnect		OSS Rates ($)					
								First	Add'l	First	Add'l	SOMEC	SOMAN	SOMAN	SOMAN	SOMAN	SOMAN
		2-Wire VG Loop/2-Wire Voice Grade Port (Centrex)Port Combo - Design		2	UEP91		24.00										
		2-Wire VG Loop/2-Wire Voice Grade Port (Centrex)Port Combo - Design		3	UEP91		37.29										
	UNE Loop Rate																
		2-Wire Voice Grade Loop (SL 1) - Zone 1		1	UEP91	UECS1	11.55										
		2-Wire Voice Grade Loop (SL 1) - Zone 2		2	UEP91	UECS1	20.04										
		2-Wire Voice Grade Loop (SL 1) - Zone 3		3	UEP91	UECS1	33.65										
		2-Wire Voice Grade Loop (SL 2) - Zone 1		1	UEP91	UECS2	14.38										
		2-Wire Voice Grade Loop (SL 2) - Zone 2		2	UEP91	UECS2	22.85										
		2-Wire Voice Grade Loop (SL 2) - Zone 3		3	UEP91	UECS2	36.14										
	UNE Ports																
	All States (Except North Carolina and Sout Carolina)																
		2-Wire Voice Grade Port (Centrex) Basic Local Area			UEP91	UEPYA	1.15	40.19	19.83	24.91	6.63						
		2-Wire Voice Grade Port (Centrex 800 termination)Basic Local Area			UEP91	UEPYB	1.15	40.19	19.83	24.91	6.63						
		2-Wire Voice Grade Port (Centrex with Caller ID)Note1 Basic Local Area			UEP91	UEPYH	1.15	40.19	19.83	24.91	6.63						
		2-Wire Voice Grade Port (Centrex from diff Serving Wire Center) Note 2, 3 Basic Local Area			UEP91	UEPYM	1.15	90.38	57.27	48.66	8.77						
		2-Wire Voice Grade Port, Diff Serving Wire Center - 800 Service Term - Basic Local Area			UEP91	UEPYZ	1.15	90.38	57.27	48.66	8.77						
		2-Wire Voice Grade Port terminated in on Megalink or equivalent - Basic Local Area			UEP91	UEPY9	1.15	40.19	19.83	24.91	6.63						
		2-Wire Voice Grade Port Terminated on 800 Service Term - Basic Local Area			UEP91	UEPY2	1.15	40.19	19.83	24.91	6.63						
	AL, KY, LA, MS, & TN Only																
		2-Wire Voice Grade Port (Centrex)			UEP91	UEPQA	1.15	40.19	19.83	24.91	6.63						
		2-Wire Voice Grade Port (Centrex 800 termination)			UEP91	UEPQB	1.15	40.19	19.83	24.91	6.63						
		2-Wire Voice Grade Port (Centrex with Caller ID)1			UEP91	UEPQH	1.15	40.19	19.83	24.91	6.63						
		2-Wire Voice Grade Port (Centrex from diff Serving Wire Center)2,3			UEP91	UEPQM	1.15	90.38	57.27	48.66	8.77						
		2-Wire Voice Grade Port, Diff Serving Wire Center - 2,3 - 800 Service Term			UEP91	UEPQZ	1.15	90.38	57.27	48.66	8.77						
		2-Wire Voice Grade Port terminated in on Megalink or equivalent			UEP91	UEPQ9	1.15	40.19	19.83	24.91	6.63						
		2-Wire Voice Grade Port Terminated on 800 Service Term			UEP91	UEPQ2	1.15	40.19	19.83	24.91	6.63						
	Local Switching																
		Centrex Intercom Funtionality, per port			UEP91	URECS	0.5488										
	Local Number Portability																
		Local Number Portability (1 per port)			UEP91	LNPCC	0.35										
	Features																
		All Standard Features Offered, per port			UEP91	UEPVF	1.98										
		All Select Features Offered, per port			UEP91	UEPVS	0.00	405.52									
		All Centrex Control Features Offered, per port			UEP91	UEPVC	1.98										
	NARS																
		Unbundled Network Access Register - Combination			UEP91	UARCX	0.00	0.00	0.00	0.00	0.00						
		Unbundled Network Access Register - Indial			UEP91	UAR1X	0.00	0.00	0.00	0.00	0.00						
		Unbundled Network Access Register - Outdial			UEP91	UAROX	0.00	0.00	0.00	0.00	0.00						
	Miscellaneous Terminations																
	2-Wire Trunk Side																
		Trunk Side Terminations, each			UEP91	CENA6	8.05	119.31	18.74	59.90	3.76						
	Interoffice Channel Mileage - 2-Wire																
		Interoffice Channel Facilities Termination - Voice Grade			UEP91	M1GBC	21.13	40.54	27.41	16.74	6.90						
		Interoffice Channel mileage, per mile or fraction of mile			UEP91	M1GBM	0.008838										
	Feature Activations (DS0) Centrex Loops on Channelized DS1 Service																
	D4 Channel Bank Feature Activations																
		Feature Activation on D-4 Channel Bank Centrex Loop Slot			UEP91	1PQWS	0.56										

UNBUNDLED NETWORK ELEMENTS - Alabama														Attachment: 2		Exhibit: A	
CATEGORY		RATE ELEMENTS	Interim	Zone	BCS	USOC	RATES ($)					Svc Order Submitted Elec per LSR	Svc Order Submitted Manually per LSR	Incremental Charge - Manual Svc Order vs. Electronic-1st	Incremental Charge - Manual Svc Order vs. Electronic-Add'l	Incremental Charge - Manual Svc Order vs. Electronic-Disc 1st	Incremental Charge - Manual Svc Order vs. Electronic-Disc Add'l
							Rec	Nonrecurring		Nonrecurring Disconnect		OSS Rates ($)					
								First	Add'l	First	Add'l	SOMEC	SOMAN	SOMAN	SOMAN	SOMAN	SOMAN
		Feature Activation on D-4 Channel Bank FX line Side Loop Slot			UEP91	1PQW6	0.56										
		Feature Activation on D-4 Channel Bank FX Trunk Side Loop Slot			UEP91	1PQW7	0.56										
		Feature Activation on D-4 Channel Bank Centrex Loop Slot - Different Wire Center			UEP91	1PQWP	0.56										
		Feature Activation on D-4 Channel Bank Private Line Loop Slot			UEP91	1PQWV	0.56										
		Feature Activation on D-4 Channel Bank Tjie Line/Trunk Loop Slot			UEP91	1PQWQ	0.56										
		Feature Activation on D-4 Channel Bank WATS Loop Slot			UEP91	1PQWA	0.56										
	Non-Recurring Charges (NRC) Associated with UNE-P Centrex																
		Conversion - Currently Combined Switch-As-Is with allowed changes, per port			UEP91	USAC2		0.10	0.10								
		Conversion of Existing Centrex Common Block			UEP91	USACN		37.75	16.58								
		New Centrex Standard Common Block			UEP91	M1ACS	0.00	667.21									
		New Centrex Customized Common Block			UEP91	M1ACC	0.00	667.21									
		Secondary Block, per Block			UEP91	M2CC1	0.00	78.02									
		NAR Establishment Charge, Per Occasion			UEP91	URECA	0.00	72.73									
	Additional Non-Recurring Charges (NRC)																
		Unbundled Miscellaneous Rate Element, Tag Loop at End Use Premise			UEP91	URETL		8.33	0.83								
		Unbundled Miscellaneous Rate Element, Tag Design Loop at End Use Premise			UEP91	URETN		11.21	1.10								
	UNE-P CENTREX - 5ESS (Valid in All States)																
	2-Wire VG Loop/2-Wire Voice Grade Port (Centrex) Combo																
	UNE Port/Loop Combination Rates (Non-Design)																
		2-Wire VG Loop/2-Wire Voice Grade Port (Centrex) Port Combo - Non-Design		1	UEP95		12.70										
		2-Wire VG Loop/2-Wire Voice Grade Port (Centrex)Port Combo - Non-Design		2	UEP95		21.19										
		2-Wire VG Loop/2-Wire Voice Grade Port (Centrex)Port Combo - Non-Design		3	UEP95		34.80										
	UNE Port/Loop Combination Rates (Design)																
		2-Wire VG Loop/2-Wire Voice Grade Port (Centrex) Port Combo - Design		1	UEP95		15.53										
		2-Wire VG Loop/2-Wire Voice Grade Port (Centrex)Port Combo - Design		2	UEP95		24.00										
		2-Wire VG Loop/2-Wire Voice Grade Port (Centrex)Port Combo - Design		3	UEP95		37.29										
	UNE Loop Rate																
		2-Wire Voice Grade Loop (SL 1) - Zone 1		1	UEP95	UECS1	11.55										
		2-Wire Voice Grade Loop (SL 1) - Zone 2		2	UEP95	UECS1	20.04										
		2-Wire Voice Grade Loop (SL 1) - Zone 3		3	UEP95	UECS1	33.65										
		2-Wire Voice Grade Loop (SL 2) - Zone 1		1	UEP95	UECS2	14.38										
		2-Wire Voice Grade Loop (SL 2) - Zone 2		2	UEP95	UECS2	22.85										
		2-Wire Voice Grade Loop (SL 2) - Zone 3		3	UEP95	UECS2	36.14										
	UNE Port Rate																
	All States																
		2-Wire Voice Grade Port (Centrex) Basic Local Area			UEP95	UEPYA	1.15	40.19	19.83	24.91	6.63						
		2-Wire Voice Grade Port (Centrex 800 termination)			UEP95	UEPYB	1.15	40.19	19.83	24.91	6.63						
		2-Wire Voice Grade Port (Centrex with Caller ID)1Basic Local Area			UEP95	UEPYH	1.15	40.19	19.83	24.91	6.63						
		2-Wire Voice Grade Port (Centrex from diff Serving Wire Center)2,3 Basic Local Area			UEP95	UEPYM	1.15	90.38	57.27	48.66	8.77						
		2-Wire Voice Grade Port, Diff Serving Wire Center 2,3 - 800 Service Term - Basic Local Area			UEP95	UEPYZ	1.15	90.38	57.27	48.66	8.77						
		2-Wire Voice Grade Port terminated in on Megalink or equivalent - Basic Local Area			UEP95	UEPY9	1.15	40.19	19.83	24.91	6.63						

UNBUNDLED NETWORK ELEMENTS - Alabama														Attachment: 2		Exhibit: A	
CATEGORY		RATE ELEMENTS	Interim	Zone	BCS	USOC	RATES ($)					Svc Order Submitted Elec per LSR	Svc Order Submitted Manually per LSR	Incremental Charge - Manual Svc Order vs. Electronic-1st	Incremental Charge - Manual Svc Order vs. Electronic-Add'l	Incremental Charge - Manual Svc Order vs. Electronic-Disc 1st	Incremental Charge - Manual Svc Order vs. Electronic-Disc Add'l
							Rec	Nonrecurring		Nonrecurring Disconnect		OSS Rates ($)					
								First	Add'l	First	Add'l	SOMEC	SOMAN	SOMAN	SOMAN	SOMAN	SOMAN
		2-Wire Voice Grade Port Terminated on 800 Service Term - Basic Local Area			UEP95	UEPY2	1.15	40.19	19.83	24.91	6.63						
	AL, KY, LA, MS, SC, & TN Only																
		2-Wire Voice Grade Port (Centrex)			UEP95	UEPQA	1.15	40.19	19.83	24.91	6.63						
		2-Wire Voice Grade Port (Centrex 800 termination)			UEP95	UEPQB	1.15	40.19	19.83	24.91	6.63						
		2-Wire Voice Grade Port (Centrex with Caller ID)1			UEP95	UEPQH	1.15	40.19	19.83	24.91	6.63						
		2-Wire Voice Grade Port (Centrex from diff Serving Wire Center)2,3			UEP95	UEPQM	1.15	90.38	57.27	48.66	8.77						
		2-Wire Voice Grade Port, Diff Serving Wire Center - 800 Service Term 2,3			UEP95	UEPQZ	1.15	90.38	57.27	48.66	8.77						
		2-Wire Voice Grade Port terminated in on Megalink or equivalent			UEP95	UEPQ9	1.15	40.19	19.83	24.91	6.63						
		2-Wire Voice Grade Port Terminated on 800 Service Term			UEP95	UEPQ2	1.15	40.19	19.83	24.91	6.63						
	Local Switching																
		Centrex Intercom Funtionality, per port			UEP95	URECS	0.5488										
	Local Number Portability																
		Local Number Portability (1 per port)			UEP95	LNPCC	0.35										
	Features																
		All Standard Features Offered, per port			UEP95	UEPVF	1.98										
		All Select Features Offered, per port			UEP95	UEPVS	0.00	405.52									
		All Centrex Control Features Offered, per port			UEP95	UEPVC	1.98										
	NARS																
		Unbundled Network Access Register - Combination			UEP95	UARCX	0.00	0.00	0.00	0.00	0.00						
		Unbundled Network Access Register - Indial			UEP95	UAR1X	0.00	0.00	0.00	0.00	0.00						
		Unbundled Network Access Register - Outdial			UEP95	UAROX	0.00	0.00	0.00	0.00	0.00						
	Miscellaneous Terminations																
	2-Wire Trunk Side																
		Trunk Side Terminations, each			UEP95	CEND6	8.05	119.31	18.74	59.90	3.76						
	4-Wire Digital (1.544 Megabits)																
		DS1 Circuit Terminations, each			UEP95	M1HD1	60.09	202.02	95.69	72.59	2.46						
		DS0 Channels Activated, each			UEP95	M1HDO	0.00	14.48									
	Interoffice Channel Mileage - 2-Wire																
		Interoffice Channel Facilities Termination			UEP95	M1GBC	21.13	40.54	27.41	16.74	6.90						
		Interoffice Channel mileage, per mile or fraction of mile			UEP95	M1GBM	0.008838										
	Feature Activations (DS0) Centrex Loops on Channelized DS1 Service																
	D4 Channel Bank Feature Activations																
		Feature Activation on D-4 Channel Bank Centrex Loop Slot			UEP95	1PQWS	0.56										
		Feature Activation on D-4 Channel Bank FX line Side Loop Slot			UEP95	1PQW6	0.56										
		Feature Activation on D-4 Channel Bank FX Trunk Side Loop Slot			UEP95	1PQW7	0.56										
		Feature Activation on D-4 Channel Bank Centrex Loop Slot - Different Wire Center			UEP95	1PQWP	0.56										
		Feature Activation on D-4 Channel Bank Private Line Loop Slot			UEP95	1PQWV	0.56										
		Feature Activation on D-4 Channel Bank Tjie Line/Trunk Loop Slot			UEP95	1PQWQ	0.56										
		Feature Activation on D-4 Channel Bank WATS Loop Slot			UEP95	1PQWA	0.56										
	Non-Recurring Charges (NRC) Associated with UNE-P Centrex																
		NRC Conversion Currently Combined Switch-As-Is with allowed changes, per port			UEP95	USAC2		0.10	0.10								
		Conversion of Existing Centrex Common Block, each			UEP95	USACN		37.75	16.58								
		New Centrex Standard Common Block			UEP95	M1ACS	0.00	667.21									
		New Centrex Customized Common Block			UEP95	M1ACC	0.00	667.21									
		NAR Establishment Charge, Per Occasion			UEP95	URECA	0.00	72.73									
	Additional Non-Recurring Charges (NRC)																
		Unbundled Miscellaneous Rate Element, Tag Loop at End Use Premise			UEP95	URETL		8.33	0.83								

UNBUNDLED NETWORK ELEMENTS - Alabama														Attachment: 2		Exhibit: A	
CATEGORY		RATE ELEMENTS	Interim	Zone	BCS	USOC	RATES ($)					Svc Order Submitted Elec per LSR	Svc Order Submitted Manually per LSR	Incremental Charge - Manual Svc Order vs. Electronic-1st	Incremental Charge - Manual Svc Order vs. Electronic-Add'l	Incremental Charge - Manual Svc Order vs. Electronic-Disc 1st	Incremental Charge - Manual Svc Order vs. Electronic-Disc Add'l
							Rec	Nonrecurring		Nonrecurring Disconnect		OSS Rates ($)					
								First	Add'l	First	Add'l	SOMEC	SOMAN	SOMAN	SOMAN	SOMAN	SOMAN
		Unbundled Miscellaneous Rate Element, Tag Design Loop at End Use Premise			UEP95	URETN		11.21	1.10								
	UNE-P CENTREX - DMS100 (Valid in All States)																
	2-Wire VG Loop/2-Wire Voice Grade Port (Centrex) Combo																
	UNE Port/Loop Combination Rates (Non-Design)																
		2-Wire VG Loop/2-Wire Voice Grade Port (Centrex) Port Combo - Non-Design		1	UEP9D		12.70										
		2-Wire VG Loop/2-Wire Voice Grade Port (Centrex)Port Combo - Non-Design		2	UEP9D		21.19										
		2-Wire VG Loop/2-Wire Voice Grade Port (Centrex)Port Combo - Non-Design		3	UEP9D		34.80										
	UNE Port/Loop Combination Rates (Design)																
		2-Wire VG Loop/2-Wire Voice Grade Port (Centrex) Port Combo - Design		1	UEP9D		15.53										
		2-Wire VG Loop/2-Wire Voice Grade Port (Centrex)Port Combo - Design		2	UEP9D		24.00										
		2-Wire VG Loop/2-Wire Voice Grade Port (Centrex)Port Combo - Design		3	UEP9D		37.29										
	UNE Loop Rate																
		2-Wire Voice Grade Loop (SL 1) - Zone 1		1	UEP9D	UECS1	11.55										
		2-Wire Voice Grade Loop (SL 1) - Zone 2		2	UEP9D	UECS1	20.04										
		2-Wire Voice Grade Loop (SL 1) - Zone 3		3	UEP9D	UECS1	33.65										
		2-Wire Voice Grade Loop (SL 2) - Zone 1		1	UEP9D	UECS2	14.38										
		2-Wire Voice Grade Loop (SL 2) - Zone 2		2	UEP9D	UECS2	22.85										
		2-Wire Voice Grade Loop (SL 2) - Zone 3		3	UEP9D	UECS2	36.14										
	UNE Port Rate																
	ALL STATES																
		2-Wire Voice Grade Port (Centrex) Basic Local Area			UEP9D	UEPYA	1.15	40.19	19.83	24.91	6.63						
		2-Wire Voice Grade Port (Centrex 800 termination)Basic Local Area			UEP9D	UEPYB	1.15	40.19	19.83	24.91	6.63						
		2-Wire Voice Grade Port (Centrex / EBS-PSET)3Basic Local Area			UEP9D	UEPYC	1.15	40.19	19.83	24.91	6.63						
		2-Wire Voice Grade Port (Centrex / EBS-M5009)3Basic Local Area			UEP9D	UEPYD	1.15	40.19	19.83	24.91	6.63						
		2-Wire Voice Grade Port (Centrex / EBS-M5209))3 Basic Local Area			UEP9D	UEPYE	1.15	40.19	19.83	24.91	6.63						
		2-Wire Voice Grade Port (Centrex / EBS-M5112))3 Basic Local Area			UEP9D	UEPYF	1.15	40.19	19.83	24.91	6.63						
		2-Wire Voice Grade Port (Centrex / EBS-M5312))3Basic Local Area			UEP9D	UEPYG	1.15	40.19	19.83	24.91	6.63						
		2-Wire Voice Grade Port (Centrex / EBS-M5008))3 Basic Local Area			UEP9D	UEPYT	1.15	40.19	19.83	24.91	6.63						
		2-Wire Voice Grade Port (Centrex / EBS-M5208))3 Basic Local Area			UEP9D	UEPYU	1.15	40.19	19.83	24.91	6.63						
		2-Wire Voice Grade Port (Centrex / EBS-M5216))3 Basic Local Area			UEP9D	UEPYV	1.15	40.19	19.83	24.91	6.63						
		2-Wire Voice Grade Port (Centrex / EBS-M5316))3 Basic Local Area			UEP9D	UEPY3	1.15	40.19	19.83	24.91	6.63						
		2-Wire Voice Grade Port (Centrex with Caller ID) Basic Local Area			UEP9D	UEPYH	1.15	40.19	19.83	24.91	6.63						
		2-Wire Voice Grade Port (Centrex/Caller ID/Msg Wtg Lamp Indication))4 Basic Local Area			UEP9D	UEPYW	1.15	40.19	19.83	24.91	6.63						
		2-Wire Voice Grade Port (Centrex/Msg Wtg Lamp Indication))4 Basic Local Area			UEP9D	UEPYJ	1.15	40.19	19.83	24.91	6.63						
		2-Wire Voice Grade Port (Centrex from diff Serving Wire Center) 2,3-Basic Local Area			UEP9D	UEPYM	1.15	90.38	57.27	48.66	8.77						
		2-Wire Voice Grade Port (Centrex/differ SWC /EBS-PSET)2,3,4 Basic Local Area			UEP9D	UEPYO	1.15	90.38	57.27	48.66	8.77						

UNBUNDLED NETWORK ELEMENTS - Alabama														Attachment: 2		Exhibit: A	
CATEGORY		RATE ELEMENTS	Interim	Zone	BCS	USOC	RATES ($)					Svc Order Submitted Elec per LSR	Svc Order Submitted Manually per LSR	Incremental Charge - Manual Svc Order vs. Electronic-1st	Incremental Charge - Manual Svc Order vs. Electronic-Add'l	Incremental Charge - Manual Svc Order vs. Electronic-Disc 1st	Incremental Charge - Manual Svc Order vs. Electronic-Disc Add'l
							Rec	Nonrecurring		Nonrecurring Disconnect		OSS Rates ($)					
								First	Add'l	First	Add'l	SOMEC	SOMAN	SOMAN	SOMAN	SOMAN	SOMAN
		2-Wire Voice Grade Port (Centrex/differ SWC /EBS-M5009)2,3,4 Basic Local Area			UEP9D	UEPYP	1.15	90.38	57.27	48.66	8.77						
		2-Wire Voice Grade Port (Centrex/differ SWC /EBS-5209)2,3,4 Basic Local Area			UEP9D	UEPYQ	1.15	90.38	57.27	48.66	8.77						
		2-Wire Voice Grade Port (Centrex/differ SWC /EBS-M5112)2,3,4 Basic Local Area			UEP9D	UEPYR	1.15	90.38	57.27	48.66	8.77						
		2-Wire Voice Grade Port (Centrex/differ SWC /EBS-M5312)2,3,4 Basic Local Area			UEP9D	UEPYS	1.15	90.38	57.27	48.66	8.77						
		2-Wire Voice Grade Port (Centrex/differ SWC /EBS-M5008)2,3,4 Basic Local Area			UEP9D	UEPY4	1.15	90.38	57.27	48.66	8.77						
		2-Wire Voice Grade Port (Centrex/differ SWC /EBS-M5208)2, 3 Basic Local Area			UEP9D	UEPY5	1.15	90.38	57.27	48.66	8.77						
		2-Wire Voice Grade Port (Centrex/differ SWC /EBS-M5216)2,3,4 Basic Local Area			UEP9D	UEPY6	1.15	90.38	57.27	48.66	8.77						
		2-Wire Voice Grade Port (Centrex/differ SWC /EBS-M5316)2,3,4 Basic Local Area			UEP9D	UEPY7	1.15	90.38	57.27	48.66	8.77						
		2-Wire Voice Grade Port, Diff Serving Wire Center - 800 Service Term 2,3			UEP9D	UEPYZ	1.15	90.38	57.27	48.66	8.77						
		2-Wire Voice Grade Port terminated in on Megalink or equivalent Basic Local Area			UEP9D	UEPY9	1.15	40.19	19.83	24.91	6.63						
		2-Wire Voice Grade Port Terminated on 800 Service Term Basic Local Area			UEP9D	UEPY2	1.15	40.19	19.83	24.91	6.63						
	AL, KY, LA, MS, SC, & TN Only																
		2-Wire Voice Grade Port (Centrex)			UEP9D	UEPQA	1.15	40.19	19.83	24.91	6.63						
		2-Wire Voice Grade Port (Centrex 800 termination)			UEP9D	UEPQB	1.15	40.19	19.83	24.91	6.63						
		2-Wire Voice Grade Port (Centrex / EBS-PSET)4			UEP9D	UEPQC	1.15	40.19	19.83	24.91	6.63						
		2-Wire Voice Grade Port (Centrex / EBS-M5009)4			UEP9D	UEPQD	1.15	40.19	19.83	24.91	6.63						
		2-Wire Voice Grade Port (Centrex / EBS-M5209)4			UEP9D	UEPQE	1.15	40.19	19.83	24.91	6.63						
		2-Wire Voice Grade Port (Centrex / EBS-M5112)4			UEP9D	UEPQF	1.15	40.19	19.83	24.91	6.63						
		2-Wire Voice Grade Port (Centrex / EBS-M5312)4			UEP9D	UEPQG	1.15	40.19	19.83	24.91	6.63						
		2-Wire Voice Grade Port (Centrex / EBS-M5008)4			UEP9D	UEPQT	1.15	40.19	19.83	24.91	6.63						
		2-Wire Voice Grade Port (Centrex / EBS-M5208)4			UEP9D	UEPQU	1.15	40.19	19.83	24.91	6.63						
		2-Wire Voice Grade Port (Centrex / EBS-M5216)4			UEP9D	UEPQV	1.15	40.19	19.83	24.91	6.63						
		2-Wire Voice Grade Port (Centrex / EBS-M5316)4			UEP9D	UEPQ3	1.15	40.19	19.83	24.91	6.63						
		2-Wire Voice Grade Port (Centrex with Caller ID)			UEP9D	UEPQH	1.15	40.19	19.83	24.91	6.63						
		2-Wire Voice Grade Port (Centrex/Caller ID/Msg Wtg Lamp Indication)4			UEP9D	UEPQW	1.15	40.19	19.83	24.91	6.63						
		2-Wire Voice Grade Port (Centrex/Msg Wtg Lamp Indication)4			UEP9D	UEPQJ	1.15	40.19	19.83	24.91	6.63						
		2-Wire Voice Grade Port (Centrex from diff Serving Wire Center) 2,3			UEP9D	UEPQM	1.15	90.38	57.27	48.66	8.77						
		2-Wire Voice Grade Port (Centrex/differ SWC /EBS-PSET)2,3,4			UEP9D	UEPQO	1.15	90.38	57.27	48.66	8.77						
		2-Wire Voice Grade Port (Centrex/differ SWC /EBS-M5009)2,3,4			UEP9D	UEPQP	1.15	90.38	57.27	48.66	8.77						
		2-Wire Voice Grade Port (Centrex/differ SWC /EBS-5209)2,3,4			UEP9D	UEPQQ	1.15	90.38	57.27	48.66	8.77						
		2-Wire Voice Grade Port (Centrex/differ SWC /EBS-M5112)2,3,4			UEP9D	UEPQR	1.15	90.38	57.27	48.66	8.77						
		2-Wire Voice Grade Port (Centrex/differ SWC /EBS-M5312)2,3,4			UEP9D	UEPQS	1.15	90.38	57.27	48.66	8.77						
		2-Wire Voice Grade Port (Centrex/differ SWC /EBS-M5008)2,3,4			UEP9D	UEPQ4	1.15	90.38	57.27	48.66	8.77						
		2-Wire Voice Grade Port (Centrex/differ SWC /EBS-M5208)2,3,4			UEP9D	UEPQ5	1.15	90.38	57.27	48.66	8.77						
		2-Wire Voice Grade Port (Centrex/differ SWC /EBS-M5216)2,3,4			UEP9D	UEPQ6	1.15	90.38	57.27	48.66	8.77						
		2-Wire Voice Grade Port (Centrex/differ SWC /EBS-M5316)2,3,4			UEP9D	UEPQ7	1.15	90.38	57.27	48.66	8.77						

UNBUNDLED NETWORK ELEMENTS - Alabama														Attachment: 2		Exhibit: A	
CATEGORY		RATE ELEMENTS	Interim	Zone	BCS	USOC	RATES ($)					Svc Order Submitted Elec per LSR	Svc Order Submitted Manually per LSR	Incremental Charge - Manual Svc Order vs. Electronic-1st	Incremental Charge - Manual Svc Order vs. Electronic-Add'l	Incremental Charge - Manual Svc Order vs. Electronic-Disc 1st	Incremental Charge - Manual Svc Order vs. Electronic-Disc Add'l
							Rec	Nonrecurring		Nonrecurring Disconnect		OSS Rates ($)					
								First	Add'l	First	Add'l	SOMEC	SOMAN	SOMAN	SOMAN	SOMAN	SOMAN
		2-Wire Voice Grade Port, Diff Serving Wire Center - 800 Service Term 2,3			UEP9D	UEPQZ	1.15	90.38	57.27	48.66	8.77						
		2-Wire Voice Grade Port terminated in on Megalink or equivalent			UEP9D	UEPQ9	1.15	40.19	19.83	24.91	6.63						
		2-Wire Voice Grade Port Terminated on 800 Service Term			UEP9D	UEPQ2	1.15	40.19	19.83	24.91	6.63						
	Local Switching																
		Centrex Intercom Funtionality, per port			UEP9D	URECS	0.5488										
	Local Number Portability																
		Local Number Portability (1 per port)			UEP9D	LNPCC	0.35										
	Features																
		All Standard Features Offered, per port			UEP9D	UEPVF	1.98										
		All Select Features Offered, per port			UEP9D	UEPVS	0.00	405.52									
		All Centrex Control Features Offered, per port			UEP9D	UEPVC	1.98										
	NARS																
		Unbundled Network Access Register - Combination			UEP9D	UARCX	0.00	0.00	0.00	0.00	0.00						
		Unbundled Network Access Register - Inward			UEP9D	UAR1X	0.00	0.00	0.00	0.00	0.00						
		Unbundled Network Access Register - Outdial			UEP9D	UAROX	0.00	0.00	0.00	0.00	0.00						
	Miscellaneous Terminations																
	2-Wire Trunk Side																
		Trunk Side Terminations, each			UEP9D	CEND6	8.05	119.31	18.74	59.90	3.76						
	4-Wire Digital (1.544 Megabits)																
		DS1 Circuit Terminations, each			UEP9D	M1HD1	60.09	202.02	95.69	72.59	2.46						
		DS0 Channels Activiated per Channel			UEP9D	M1HDO	0.00	14.48									
	Interoffice Channel Mileage - 2-Wire																
		Interoffice Channel Facilities Termination			UEP9D	M1GBC	21.13	40.54	27.41	16.74	6.90						
		Interoffice Channel mileage, per mile or fraction of mile			UEP9D	M1GBM	0.008838										
	Feature Activations (DS0) Centrex Loops on Channelized DS1 Service																
	D4 Channel Bank Feature Activations																
		Feature Activation on D-4 Channel Bank Centrex Loop Slot			UEP9D	1PQWS	0.56										
		Feature Activation on D-4 Channel Bank FX line Side Loop Slot			UEP9D	1PQW6	0.56										
		Feature Activation on D-4 Channel Bank FX Trunk Side Loop Slot			UEP9D	1PQW7	0.56										
		Feature Activation on D-4 Channel Bank Centrex Loop Slot - Different Wire Center			UEP9D	1PQWP	0.56										
		Feature Activation on D-4 Channel Bank Private Line Loop Slot			UEP9D	1PQWV	0.56										
		Feature Activation on D-4 Channel Bank Tjie Line/Trunk Loop Slot			UEP9D	1PQWQ	0.56										
		Feature Activation on D-4 Channel Bank WATS Loop Slot			UEP9D	1PQWA	0.56										
	Non-Recurring Charges (NRC) Associated with UNE-P Centrex																
		NRC Conversion Currently Combined Switch-As-Is with allowed changes, per port			UEP9D	USAC2		0.10	0.10								
		Conversion of existing Centrex Common Block, each			UEP9D	USACN		37.75	16.58								
		New Centrex Standard Common Block			UEP9D	M1ACS	0.00	667.21									
		New Centrex Customized Common Block			UEP9D	M1ACC	0.00	667.21									
		NAR Establishment Charge, Per Occasion			UEP9D	URECA	0.00	72.73									
	Additional Non-Recurring Charges (NRC)																
		Unbundled Miscellaneous Rate Element, Tag Loop at End Use Premise			UEP9D	URETL		8.33	0.83								
		Unbundled Miscellaneous Rate Element, Tag Design Loop at End Use Premise			UEP9D	URETN		11.21	1.10								
	UNE-P CENTREX - EWSD (Valid in AL, FL, KY, LA, MS & TN)																
	2-Wire VG Loop/2-Wire Voice Grade Port (Centrex) Combo																
	UNE Port/Loop Combination Rates (Non-Design)																
		2-Wire VG Loop/2-Wire Voice Grade Port (Centrex) Port Combo - Non-Design		1	UEP9E		12.70										
		2-Wire VG Loop/2-Wire Voice Grade Port (Centrex)Port Combo - Non-Design		2	UEP9E		21.19										

UNBUNDLED NETWORK ELEMENTS - Alabama														Attachment: 2		Exhibit: A	
CATEGORY	RATE ELEMENTS	Interim	Zone	BCS	USOC	RATES ($)					Svc Order Submitted Elec per LSR	Svc Order Submitted Manually per LSR	Incremental Charge - Manual Svc Order vs. Electronic-1st	Incremental Charge - Manual Svc Order vs. Electronic-Add'l	Incremental Charge - Manual Svc Order vs. Electronic-Disc 1st	Incremental Charge - Manual Svc Order vs. Electronic-Disc Add'l
						Rec	Nonrecurring		Nonrecurring Disconnect		OSS Rates ($)					
							First	Add'l	First	Add'l	SOMEC	SOMAN	SOMAN	SOMAN	SOMAN	SOMAN
	2-Wire VG Loop/2-Wire Voice Grade Port (Centrex)Port Combo - Non-Design		3	UEP9E		34.80										
UNE Port/Loop Combination Rates (Design)																
	2-Wire VG Loop/2-Wire Voice Grade Port (Centrex) Port Combo - Design		1	UEP9E		15.53										
	2-Wire VG Loop/2-Wire Voice Grade Port (Centrex)Port Combo - Design		2	UEP9E		24.00										
	2-Wire VG Loop/2-Wire Voice Grade Port (Centrex)Port Combo - Design		3	UEP9E		37.29										
UNE Loop Rate																
	2-Wire Voice Grade Loop (SL 1) - Zone 1		1	UEP9E	UECS1	11.55										
	2-Wire Voice Grade Loop (SL 1) - Zone 2		2	UEP9E	UECS1	20.04										
	2-Wire Voice Grade Loop (SL 1) - Zone 3		3	UEP9E	UECS1	33.65										
	2-Wire Voice Grade Loop (SL 2) - Zone 1		1	UEP9E	UECS2	14.38										
	2-Wire Voice Grade Loop (SL 2) - Zone 2		2	UEP9E	UECS2	22.85										
	2-Wire Voice Grade Loop (SL 2) - Zone 3		3	UEP9E	UECS2	36.14										
UNE Port Rate																
AL, FL, KY, LA, MS, & TN only																
	2-Wire Voice Grade Port (Centrex) Basic Local Area			UEP9E	UEPYA	1.15	40.19	19.83	24.91	6.63						
	2-Wire Voice Grade Port (Centrex 800 termination)Basic Local Area			UEP9E	UEPYB	1.15	40.19	19.83	24.91	6.63						
	2-Wire Voice Grade Port (Centrex with Caller ID)1Basic Local Area			UEP9E	UEPYH	1.15	40.19	19.83	24.91	6.63						
	2-Wire Voice Grade Port (Centrex from diff Serving Wire Center)2,3 Basic Local Area			UEP9E	UEPYM	1.15	90.38	57.27	48.66	8.77						
	2-Wire Voice Grade Port, Diff Serving Wire Center 2,3 - 800 Service Term - Basic Local Area			UEP9E	UEPYZ	1.15	90.38	57.27	48.66	8.77						
	2-Wire Voice Grade Port terminated in on Megalink or equivalent - Basic Local Area			UEP9E	UEPY9	1.15	40.19	19.83	24.91	6.63						
	2-Wire Voice Grade Port Terminated on 800 Service Term - Basic Local Area			UEP9E	UEPY2	1.15	40.19	19.83	24.91	6.63						
AL, KY, LA, MS, & TN Only																
	2-Wire Voice Grade Port (Centrex)			UEP9E	UEPQA	1.15	40.19	19.83	24.91	6.63						
	2-Wire Voice Grade Port (Centrex 800 termination)			UEP9E	UEPQB	1.15	40.19	19.83	24.91	6.63						
	2-Wire Voice Grade Port (Centrex with Caller ID)1			UEP9E	UEPQH	1.15	40.19	19.83	24.91	6.63						
	2-Wire Voice Grade Port (Centrex from diff Serving Wire Center)2,3			UEP9E	UEPQM	1.15	90.38	57.27	48.66	8.77						
	2-Wire Voice Grade Port, Diff Serving Wire Center 2,3 - 800 Service Term			UEP9E	UEPQZ	1.15	90.38	57.27	48.66	8.77						
	2-Wire Voice Grade Port terminated in on Megalink or equivalent			UEP9E	UEPQ9	1.15	40.19	19.83	24.91	6.63						
	2-Wire Voice Grade Port Terminated on 800 Service Term			UEP9E	UEPQ2	1.15	40.19	19.83	24.91	6.63						
Local Switching																
	Centrex Intercom Funtionality, per port			UEP9E	URECS	0.5488										
Local Number Portability																
	Local Number Portability (1 per port)			UEP9E	LNPCC	0.35										
Features																
	All Standard Features Offered, per port			UEP9E	UEPVF	1.98										
	All Select Features Offered, per port			UEP9E	UEPVS	0.00	405.52									
	All Centrex Control Features Offered, per port			UEP9E	UEPVC	1.98										
NARS																
	Unbundled Network Access Register - Combination			UEP9E	UARCX	0.00	0.00	0.00	0.00	0.00						
	Unbundled Network Access Register - Indial			UEP9E	UAR1X	0.00	0.00	0.00	0.00	0.00						
	Unbundled Network Access Register - Outdial			UEP9E	UAROX	0.00	0.00	0.00	0.00	0.00						
Miscellaneous Terminations																
2-Wire Trunk Side																
	Trunk Side Terminations, each			UEP9E	CEND6	8.05	119.31	18.74	59.90	3.76						
4-Wire Digital (1.544 Megabits)																
	DS1 Circuit Terminations, each			UEP9E	M1HD1	60.09	202.02	95.69	72.59	2.46						

UNBUNDLED NETWORK ELEMENTS - Alabama														Attachment: 2		Exhibit: A	
CATEGORY	RATE ELEMENTS	Interim	Zone	BCS	USOC	RATES ($)					Svc Order Submitted Elec per LSR	Svc Order Submitted Manually per LSR	Incremental Charge - Manual Svc Order vs. Electronic-1st	Incremental Charge - Manual Svc Order vs. Electronic-Add'l	Incremental Charge - Manual Svc Order vs. Electronic-Disc 1st	Incremental Charge - Manual Svc Order vs. Electronic-Disc Add'l
						Rec	Nonrecurring		Nonrecurring Disconnect		OSS Rates ($)					
							First	Add'l	First	Add'l	SOMEC	SOMAN	SOMAN	SOMAN	SOMAN	SOMAN
	DS0 Channel Activated Per Channel			UEP9E	M1HDO	0.00	14.48									
Interoffice Channel Mileage - 2-Wire																
	Interoffice Channel Facilities Termination			UEP9E	M1GBC	21.13	40.54	27.41	16.74	6.90						
	Interoffice Channel mileage, per mile or fraction of mile			UEP9E	M1GBM	0.008838										
Feature Activations (DS0) Centrex Loops on Channelized DS1 Service																
D4 Channel Bank Feature Activations																
	Feature Activation on D-4 Channel Bank Centrex Loop Slot			UEP9E	1PQWS	0.56										
	Feature Activation on D-4 Channel Bank FX line Side Loop Slot			UEP9E	1PQW6	0.56										
	Feature Activation on D-4 Channel Bank FX Trunk Side Loop Slot			UEP9E	1PQW7	0.56										
	Feature Activation on D-4 Channel Bank Centrex Loop Slot - Different Wire Center			UEP9E	1PQWP	0.56										
	Feature Activation on D-4 Channel Bank Private Line Loop Slot			UEP9E	1PQWV	0.56										
	Feature Activation on D-4 Channel Bank Tjie Line/Trunk Loop Slot			UEP9E	1PQWQ	0.56										
	Feature Activation on D-4 Channel Bank WATS Loop Slot			UEP9E	1PQWA	0.56										
Non-Recurring Charges (NRC) Associated with UNE-P Centrex																
	NRC Conversion Currently Combined Switch-As-Is with allowed changes, per port			UEP9E	USAC2		0.10	0.10								
	Conversion of Existing Centrex Common Block, each			UEP9E	USACN		37.75	16.58								
	New Centrex Standard Common Block			UEP9E	M1ACS	0.00	667.21									
	New Centrex Customized Common Block			UEP9E	M1ACC	0.00	667.21									
	NAR Establishment Charge, Per Occasion			UEP9E	URECA	0.00	72.73									
Additional Non-Recurring Charges (NRC)																
	Unbundled Miscellaneous Rate Element, Tag Loop at End Use Premise			UEP9E	URETL		8.33	0.83								
	Unbundled Miscellaneous Rate Element, Tag Design Loop at End Use Premise			UEP9E	URETN		11.21	1.10								
UNE-P CENTREX - DCO - Valid in AL, KY, LA, MS, & TN)																
2-Wire VG Loop/2-Wire Voice Grade Port (Centrex) Combo																
UNE Port/Loop Combination Rates (Non-Design)																
	2-Wire VG Loop/2-Wire Voice Grade Port (Centrex) Port Combo - Non-Design		1	UEP93		12.70										
	2-Wire VG Loop/2-Wire Voice Grade Port (Centrex)Port Combo - Non-Design		2	UEP93		21.19										
	2-Wire VG Loop/2-Wire Voice Grade Port (Centrex)Port Combo - Non-Design		3	UEP93		34.80										
UNE Port/Loop Combination Rates (Design)																
	2-Wire VG Loop/2-Wire Voice Grade Port (Centrex) Port Combo - Design		1	UEP93		15.53										
	2-Wire VG Loop/2-Wire Voice Grade Port (Centrex)Port Combo - Design		2	UEP93		24.00										
	2-Wire VG Loop/2-Wire Voice Grade Port (Centrex)Port Combo - Design		3	UEP93		37.29										
UNE Loop Rate																
	2-Wire Voice Grade Loop (SL 1) - Zone 1		1	UEP93	UECS1	11.55										
	2-Wire Voice Grade Loop (SL 1) - Zone 2		2	UEP93	UECS1	20.04										
	2-Wire Voice Grade Loop (SL 1) - Zone 3		3	UEP93	UECS1	33.65										
	2-Wire Voice Grade Loop (SL 2) - Zone 1		1	UEP93	UECS2	14.38										
	2-Wire Voice Grade Loop (SL 2) - Zone 2		2	UEP93	UECS2	22.85										
	2-Wire Voice Grade Loop (SL 2) - Zone 3		3	UEP93	UECS2	36.14										
UNE Port Rate																
AL, KY, LA, MS, & TN only																
	2-Wire Voice Grade Port (Centrex) Basic Local Area			UEP93	UEPYA	1.15	40.19	19.83	24.91	6.63						
	2-Wire Voice Grade Port (Centrex 800 termination)Basic Local Area			UEP93	UEPYB	1.15	40.19	19.83	24.91	6.63						

UNBUNDLED NETWORK ELEMENTS - Alabama														Attachment: 2		Exhibit: A	
CATEGORY		RATE ELEMENTS	Interim	Zone	BCS	USOC	RATES ($)					Svc Order Submitted Elec per LSR	Svc Order Submitted Manually per LSR	Incremental Charge - Manual Svc Order vs. Electronic-1st	Incremental Charge - Manual Svc Order vs. Electronic-Add'l	Incremental Charge - Manual Svc Order vs. Electronic-Disc 1st	Incremental Charge - Manual Svc Order vs. Electronic-Disc Add'l
							Rec	Nonrecurring		Nonrecurring Disconnect		OSS Rates ($)					
								First	Add'l	First	Add'l	SOMEC	SOMAN	SOMAN	SOMAN	SOMAN	SOMAN
		2-Wire Voice Grade Port (Centrex with Caller ID)1Basic Local Area			UEP93	UEPYH	1.15	40.19	19.83	24.91	6.63						
		2-Wire Voice Grade Port (Centrex from diff Serving Wire Center)2,3 Basic Local Area			UEP93	UEPYM	1.15	90.38	57.27	48.66	8.77						
		2-Wire Voice Grade Port, Diff Serving Wire Center - 2,3 - 800 Service Term - Basic Local Area			UEP93	UEPYZ	1.15	90.38	57.27	48.66	8.77						
		2-Wire Voice Grade Port terminated in on Megalink or equivalent - Basic Local Area			UEP93	UEPY9	1.15	40.19	19.83	24.91	6.63						
		2-Wire Voice Grade Port Terminated on 800 Service Term - Basic Local Area			UEP93	UEPY2	1.15	40.19	19.83	24.91	6.63						
		2-Wire Voice Grade Port (Centrex)			UEP93	UEPQA	1.15	40.19	19.83	24.91	6.63						
		2-Wire Voice Grade Port (Centrex 800 termination)			UEP93	UEPQB	1.15	40.19	19.83	24.91	6.63						
		2-Wire Voice Grade Port (Centrex with Caller ID)1			UEP93	UEPQH	1.15	40.19	19.83	24.91	6.63						
		2-Wire Voice Grade Port (Centrex from diff Serving Wire Center)2,3			UEP93	UEPQM	1.15	90.38	57.27	48.66	8.77						
		2-Wire Voice Grade Port, Diff Serving Wire Center - 2,3 -800 Service Term			UEP93	UEPQZ	1.15	90.38	57.27	48.66	8.77						
		2-Wire Voice Grade Port terminated in on Megalink or equivalent			UEP93	UEPQ9	1.15	40.19	19.83	24.91	6.63						
		2-Wire Voice Grade Port Terminated on 800 Service Term			UEP93	UEPQ2	1.15	40.19	19.83	24.91	6.63						
	Local Switching																
		Centrex Intercom Funtionality, per port			UEP93	URECS	0.5488										
	Local Number Portability																
		Local Number Portability (1 per port)			UEP93	LNPCC	0.35										
	Features																
		All Standard Features Offered, per port			UEP93	UEPVF	1.98										
		All Centrex Control Features Offered, per port			UEP93	UEPVC	1.98										
	NARS																
		Unbundled Network Access Register - Combination			UEP93	UARCX	0.00	0.00	0.00	0.00	0.00						
		Unbundled Network Access Register - Indial			UEP93	UAR1X	0.00	0.00	0.00	0.00	0.00						
		Unbundled Network Access Register - Outdial			UEP93	UAROX	0.00	0.00	0.00	0.00	0.00						
	Miscellaneous Terminations																
	2-Wire Trunk Side																
		Trunk Side Terminations, each			UEP93	CEND6	8.05	119.31	18.74	59.90	3.76						
	4-Wire Digital (1.544 Megabits)																
		DS1 Circuit Terminations, each			UEP93	M1HD1	60.09	202.02	95.69	72.59	2.46						
		DS0 Channels Activated, Per Channel			UEP93	M1HDO	0.00	14.48									
	Interoffice Channel Mileage - 2-Wire																
		Interoffice Channel Facilities Termination			UEP93	M1GBC	21.13	40.54	27.41	16.74	6.90						
		Interoffice Channel mileage, per mile or fraction of mile			UEP93	M1GBM	0.008838										
	Feature Activations (DS0) Centrex Loops on Channelized DS1 Service																
	D4 Channel Bank Feature Activations																
		Feature Activation on D-4 Channel Bank Centrex Loop Slot			UEP93	1PQWS	0.56										
		Feature Activation on D-4 Channel Bank FX Line Side Loop Slot			UEP93	1PQW6	0.56										
		Feature Activation on D-4 Channel Bank FX Trunk Side Loop Slot			UEP93	1PQW7	0.56										
		Feature Activation on D-4 Channel Bank Centrex Loop Slot - Different Wire Center			UEP93	1PQWP	0.56										
		Feature Activation on D-4 Channel Bank Private Line Loop Slot			UEP93	1PQWV	0.56										
		Feature Activation on D-4 Channel Bank Tie Line/Trunk Loop Slot			UEP93	1PQWQ	0.56										
		Feature Activation on D-4 Channel Bank WATS Loop Slot			UEP93	1PQWA	0.56										
	Non-Recurring Charges (NRC) Associated with UNE-P Centrex																
		NRC Conversion Currently Combined Switch-As-Is with allowed changes, per port			UEP93	USAC2		0.10	0.10								
		Conversion of Existing Centrex Common Block, each			UEP93	USACN		37.75	16.58								
		New Centrex Standard Common Block			UEP93	M1ACS	0.00	667.21									

UNBUNDLED NETWORK ELEMENTS - Alabama														Attachment: 2		Exhibit: A	
CATEGORY		RATE ELEMENTS	Interim	Zone	BCS	USOC	RATES ($)					Svc Order Submitted Elec per LSR	Svc Order Submitted Manually per LSR	Incremental Charge - Manual Svc Order vs. Electronic-1st	Incremental Charge - Manual Svc Order vs. Electronic-Add'l	Incremental Charge - Manual Svc Order vs. Electronic-Disc 1st	Incremental Charge - Manual Svc Order vs. Electronic-Disc Add'l
							Rec	Nonrecurring		Nonrecurring Disconnect		OSS Rates ($)					
								First	Add'l	First	Add'l	SOMEC	SOMAN	SOMAN	SOMAN	SOMAN	SOMAN
		New Centrex Customized Common Block			UEP93	M1ACC	0.00	667.21									
		NAR Establishment Charge, Per Occasion			UEP93	URECA	0.00	72.73									
	Additional Non-Recurring Charges (NRC)																
		Unbundled Miscellaneous Rate Element, Tag Loop at End Use Premise			UEP93	URETL		8.33	0.83								
		Unbundled Miscellaneous Rate Element, Tag Design Loop at End Use Premise			UEP93	URETN		11.21	1.10								
	Note 1 - Required Port for Centrex Control in 1AESS, 5ESS & EWSD																
	Note 2 - Requres Interoffice Channel Mileage																
	Note 3 - Installation is combination of Installation charge for SL2 Loop and Port																
	Note 4 - Requires Specific Customer Premises Equipment																
	Note: Rates displaying an "R" in Interim column are interim and subject to rate true-up as set forth in General Terms and Conditions.																

UNBUNDLED NETWORK ELEMENTS - Florida														Attachment: 2		Exhibit: A	
CATEGORY		RATE ELEMENTS	Interim	Zone	BCS	USOC	RATES ($)					Svc Order Submitted Elec per LSR	Svc Order Submitted Manually per LSR	Incremental Charge - Manual Svc Order vs. Electronic-1st	Incremental Charge - Manual Svc Order vs. Electronic-Add'l	Incremental Charge - Manual Svc Order vs. Electronic-Disc 1st	Incremental Charge - Manual Svc Order vs. Electronic-Disc Add'l
							Rec	Nonrecurring		Nonrecurring Disconnect		OSS Rates ($)					
								First	Add'l	First	Add'l	SOMEC	SOMAN	SOMAN	SOMAN	SOMAN	SOMAN
	The "Zone" shown in the sections for stand-alone loops or loops as part of a combination refers to Geographically Deaveraged UNE Zones. To view Geographically Deaveraged UNE Zone Designations by Central Office, refer to internet Website: http://www.interconnection.bellsouth.com/become_a_clec/html/interconnection.htm																
OPERATIONAL SUPPORT SYSTEMS (OSS) - "REGIONAL RATES"																	
	NOTE: (1) CLEC should contact its contract negotiator if it prefers the "state specific" OSS charges as ordered by the State Commissions. The OSS charges currently contained in this rate exhibit are the BellSouth "regional" service ordering charges. CLEC may elect either the state specific Commission ordered rates for the service ordering charges, or CLEC may elect the regional service ordering charge, however, CLEC can not obtain a mixture of the two regardless if CLEC has a interconnection contract established in each of the 9 states.																
	NOTE: (2) Any element that can be ordered electronically will be billed according to the SOMEC rate listed in this category. Please refer to BellSouth's Local Ordering Handbook (LOH) to determine if a product can be ordered electronically. For those elements that cannot be ordered electronically at present per the LOH, the listed SOMEC rate in this category reflects the charge that would be billed to a CLEC once electronic ordering capabilities come on-line for that element. Otherwise, the manual ordering charge, SOMAN, will be applied to a CLECs bill when it submits an LSR to BellSouth.																
		OSS - Electronic Service Order Charge, Per Local Service Request (LSR) - UNE Only				SOMEC		3.50	0.00	3.50	0.00						
		OSS - Manual Service Order Charge, Per Local Service Request (LSR) - UNE Only				SOMAN		11.90	0.00	1.83	0.00						
UNE SERVICE DATE ADVANCEMENT CHARGE																	
	NOTE: The Expedite charge will be maintained commensurate with BellSouth's FCC No.1 Tariff, Section 5 as applicable.																
		UNE Expedite Charge per Circuit or Line Assignable USOC, per Day			UAL, UEANL, UCL, UEF, UDF, UEQ, UDL, UENTW, UDN, UEA, UHL, ULC, USL, U1T12, U1T48, U1TD1, U1TD3, U1TDX, U1TO3, U1TS1, U1TVX, UC1BC, UC1BL, UC1CC, UC1CL, UC1DC, UC1DL, UC1EC, UC1EL, UC1FC, UC1FL, UC1GC, UC1GL, UC1HC, UC1HL, UDL12, UDL48, UDLO3, UDLSX, UE3, ULD12, ULD48, ULDD1, ULDD3, ULDDX, ULDO3, ULDS1, ULDVX, UNC1X, UNC3X, UNCDX, UNCNX, UNCSX, UNCVX, UNLD1, UNLD3, UXTD1, UXTD3, UXTS1, U1TUC, U1TUD, U1TUB, U1TUA	SDASP		200.00									
UNBUNDLED EXCHANGE ACCESS LOOP																	
	2-WIRE ANALOG VOICE GRADE LOOP																
		2-Wire Analog Voice Grade Loop - Service Level 1- Zone 1		1	UEANL	UEAL2	10.69	49.57	22.83	25.62	6.57						
		2-Wire Analog Voice Grade Loop - Service Level 1- Zone 2		2	UEANL	UEAL2	15.20	49.57	22.83	25.62	6.57						
		2-Wire Analog Voice Grade Loop - Service Level 1- Zone 3		3	UEANL	UEAL2	26.97	49.57	22.83	25.62	6.57						
		2-Wire Analog Voice Grade Loop - Service Level 1- Zone 1		1	UEANL	UEASL	10.69	49.57	22.83	25.62	6.57						
		2-Wire Analog Voice Grade Loop - Service Level 1- Zone 2		2	UEANL	UEASL	15.20	49.57	22.83	25.62	6.57						
		2-Wire Analog Voice Grade Loop - Service Level 1- Zone 3		3	UEANL	UEASL	26.97	49.57	22.83	25.62	6.57						
		Unbundled Miscellaneous Rate Element, Tag Loop at End User Premise			UEANL	URETL		8.33	0.83								
		Loop Testing - Basic 1st Half Hour			UEANL	URET1		48.65	48.65								
		Loop Testing - Basic Additional Half Hour			UEANL	URETA		23.95	23.95								

CATEGORY	RATE ELEMENTS	Interim	Zone	BCS	USOC	RATES ($)					Svc Order Submitted Elec per LSR	Svc Order Submitted Manually per LSR	Attachment: 2 Incremental Charge - Manual Svc Order vs. Electronic-1st	Attachment: 2 Incremental Charge - Manual Svc Order vs. Electronic-Add'l	Exhibit: A Incremental Charge - Manual Svc Order vs. Electronic-Disc 1st	Exhibit: A Incremental Charge - Manual Svc Order vs. Electronic-Disc Add'l
						Rec	Nonrecurring		Nonrecurring Disconnect		OSS Rates ($)					
							First	Add'l	First	Add'l	SOMEC	SOMAN	SOMAN	SOMAN	SOMAN	SOMAN
	CLEC to CLEC Conversion Charge Without Outside Dispatch (UVL-SL1)			UEANL	UREWO		15.78	8.94								
	Unbundled Voice Loop, Non-Design Voice Loop, billing for BST providing make-up (Engineering Information - E.I.)			UEANL	UEANM		13.49									
	Manual Order Coordination for UVL-SL1s (per loop)			UEANL	UEAMC		9.00	9.00								
	Order Coordination for Specified Conversion Time for UVL-SL1 (per LSR)			UEANL	OCOSL		23.02									
2-WIRE Unbundled COPPER LOOP																
	2-Wire Unbundled Copper Loop - Non-Designed Zone 1		1	UEQ	UEQ2X	7.69	44.98	20.90	24.88	6.45						
	2 Wire Unbundled Copper Loop - Non-Designed - Zone 2		2	UEQ	UEQ2X	10.92	44.98	20.90	24.88	6.45						
	2 Wire Unbundled Copper Loop - Non-Designed - Zone 3		3	UEQ	UEQ2X	19.38	44.98	20.90	24.88	6.45						
	Unbundled Miscellaneous Rate Element, Tag Loop at End User Premise			UEQ	URETL		8.33	0.83								
	Manual Order Coordination 2 Wire Unbundled Copper Loop - Non-Designed (per loop)			UEQ	USBMC		9.00									
	Unbundled Copper Loop, Non-Design Cooper Loop, billing for BST providing make-up (Engineering Information - E.I.)			UEQ	UEQMU		13.49									
	Loop Testing - Basic 1st Half Hour			UEQ	URET1		48.65	48.65								
	Loop Testing - Basic Additional Half Hour			UEQ	URETA		23.95	23.95								
	CLEC to CLEC Conversion Charge Without Outside Dispatch (UCL-ND)			UEQ	UREWO		14.27	7.43								
UNBUNDLED EXCHANGE ACCESS LOOP																
2-WIRE ANALOG VOICE GRADE LOOP																
	2 Wire Analog Voice Grade Loop-Service Level 1-Line Splitting-Zone 1		1	UEPSR UEPSB	UEALS	10.69	49.57	22.83	25.62	6.57						
	2 Wire Analog Voice Grade Loop-Service Level 1-Line Splitting-Zone 1		1	UEPSR UEPSB	UEABS	10.69	49.57	22.83	25.62	6.57						
	2 Wire Analog Voice Grade Loop- Service Level 1-Line Splitting-Zone 2		2	UEPSR UEPSB	UEALS	15.20	49.57	22.83	25.62	6.57						
	2 Wire Analog Voice Grade Loop- Service Level 1-Line Splitting-Zone 2		2	UEPSR UEPSB	UEABS	15.20	49.57	22.83	25.62	6.57						
	2 Wire Analog Voice Grade Loop-Service Level 1-Line Splitting-Zone 3		3	UEPSR UEPSB	UEALS	26.97	49.57	22.83	25.62	6.57						
	2 Wire Analog Voice Grade Loop-Service Level 1-Line Splitting-Zone 3		3	UEPSR UEPSB	UEABS	26.97	49.57	22.83	25.62	6.57						
UNBUNDLED EXCHANGE ACCESS LOOP																
2-WIRE ANALOG VOICE GRADE LOOP																
	2-Wire Analog Voice Grade Loop - Service Level 2 w/Loop or Ground Start Signaling - Zone 1		1	UEA	UEAL2	12.24	135.75	82.47	63.53	12.01						
	2-Wire Analog Voice Grade Loop - Service Level 2 w/Loop or Ground Start Signaling - Zone 2		2	UEA	UEAL2	17.40	135.75	82.47	63.53	12.01						
	2-Wire Analog Voice Grade Loop - Service Level 2 w/Loop or Ground Start Signaling - Zone 3		3	UEA	UEAL2	30.87	135.75	82.47	63.53	12.01						
	Order Coordination for Specified Conversion Time (per LSR)			UEA	OCOSL		23.02									
	2-Wire Analog Voice Grade Loop - Service Level 2 w/Reverse Battery Signaling - Zone 1		1	UEA	UEAR2	12.24	135.75	82.47	63.53	12.01						
	2-Wire Analog Voice Grade Loop - Service Level 2 w/Reverse Battery Signaling - Zone 2		2	UEA	UEAR2	17.40	135.75	82.47	63.53	12.01						
	2-Wire Analog Voice Grade Loop - Service Level 2 w/Reverse Battery Signaling - Zone 3		3	UEA	UEAR2	30.87	135.75	82.47	63.53	12.01						
	Order Coordination for Specified Conversion Time (per LSR)			UEA	OCOSL		23.02									
	CLEC to CLEC Conversion Charge without outside dispatch			UEA	UREWO		87.71	36.35								
	Loop Tagging - Service Level 2 (SL2)			UEA	URETL		11.21	1.10								
4-WIRE ANALOG VOICE GRADE LOOP																
	4-Wire Analog Voice Grade Loop - Zone 1		1	UEA	UEAL4	18.89	167.86	115.15	67.08	15.56						
	4-Wire Analog Voice Grade Loop - Zone 2		2	UEA	UEAL4	26.84	167.86	115.15	67.08	15.56						
	4-Wire Analog Voice Grade Loop - Zone 3		3	UEA	UEAL4	47.62	167.86	115.15	67.08	15.56						
	Order Coordination for Specified Conversion Time (per LSR)			UEA	OCOSL		23.02									
	CLEC to CLEC Conversion Charge without outside dispatch			UEA	UREWO		87.71	36.35								

CATEGORY	RATE ELEMENTS	Interim	Zone	BCS	USOC	RATES ($)					Svc Order Submitted Elec per LSR	Svc Order Submitted Manually per LSR	Attachment: 2 Incremental Charge - Manual Svc Order vs. Electronic-1st	Attachment: 2 Incremental Charge - Manual Svc Order vs. Electronic-Add'l	Exhibit: A Incremental Charge - Manual Svc Order vs. Electronic-Disc 1st	Exhibit: A Incremental Charge - Manual Svc Order vs. Electronic-Disc Add'l
						Rec	Nonrecurring		Nonrecurring Disconnect		OSS Rates ($)					
							First	Add'l	First	Add'l	SOMEC	SOMAN	SOMAN	SOMAN	SOMAN	SOMAN
2-WIRE ISDN DIGITAL GRADE LOOP																
	2-Wire ISDN Digital Grade Loop - Zone 1		1	UDN	U1L2X	19.28	147.69	94.41	62.23	10.71						
	2-Wire ISDN Digital Grade Loop - Zone 2		2	UDN	U1L2X	27.40	147.69	94.41	62.23	10.71						
	2-Wire ISDN Digital Grade Loop - Zone 3		3	UDN	U1L2X	48.62	147.69	94.41	62.23	10.71						
	Order Coordination For Specified Conversion Time (per LSR)			UDN	OCOSL		23.02									
	CLEC to CLEC Conversion Charge without outside dispatch			UDN	UREWO		91.61	44.15								
2-WIRE ASYMMETRICAL DIGITAL SUBSCRIBER LINE (ADSL) COMPATIBLE LOOP																
	2 Wire Unbundled ADSL Loop including manual service inquiry & facility reservation - Zone 1		1	UAL	UAL2X	8.30	149.53	103.85	75.05	15.63						
	2 Wire Unbundled ADSL Loop including manual service inquiry & facility reservation - Zone 2		2	UAL	UAL2X	11.80	149.53	103.85	75.05	15.63						
	2 Wire Unbundled ADSL Loop including manual service inquiry & facility reservation - Zone 3		3	UAL	UAL2X	20.94	149.53	103.85	75.05	15.63						
	Order Coordination for Specified Conversion Time (per LSR)			UAL	OCOSL		23.02									
	2 Wire Unbundled ADSL Loop without manual service inquiry & facility reservaton - Zone 1		1	UAL	UAL2W	8.30	124.83	71.12	60.64	9.12						
	2 Wire Unbundled ADSL Loop without manual service inquiry & facility reservaton - Zone 2		2	UAL	UAL2W	11.80	124.83	71.12	60.64	9.12						
	2 Wire Unbundled ADSL Loop without manual service inquiry & facility reservaton - Zone 3		3	UAL	UAL2W	20.94	124.83	71.12	60.64	9.12						
	Order Coordination for Specified Conversion Time (per LSR)			UAL	OCOSL		23.02									
	CLEC to CLEC Conversion Charge without outside dispatch			UAL	UREWO		86.19	40.39								
2-WIRE HIGH BIT RATE DIGITAL SUBSCRIBER LINE (HDSL) COMPATIBLE LOOP																
	2 Wire Unbundled HDSL Loop including manual service inquiry & facility reservation - Zone 1		1	UHL	UHL2X	7.22	159.09	113.41	75.05	15.63						
	2 Wire Unbundled HDSL Loop including manual service inquiry & facility reservation - Zone 2		2	UHL	UHL2X	10.26	159.09	113.41	75.05	15.63						
	2 Wire Unbundled HDSL Loop including manual service inquiry & facility reservation - Zone 3		3	UHL	UHL2X	18.21	159.09	113.41	75.05	15.63						
	Order Coordination for Specified Conversion Time (per LSR)			UHL	OCOSL		23.02									
	2 Wire Unbundled HDSL Loop without manual service inquiry and facility reservation - Zone 1		1	UHL	UHL2W	7.22	134.40	80.69	60.64	9.12						
	2 Wire Unbundled HDSL Loop without manual service inquiry and facility reservation - Zone 2		2	UHL	UHL2W	10.26	134.40	80.69	60.64	9.12						
	2 Wire Unbundled HDSL Loop without manual service inquiry and facility reservation - Zone 3		3	UHL	UHL2W	18.21	134.40	80.69	60.64	9.12						
	Order Coordination for Specified Conversion Time (per LSR)			UHL	OCOSL		23.02									
	CLEC to CLEC Conversion Charge without outside dispatch			UHL	UREWO		86.12	40.39								
4-WIRE HIGH BIT RATE DIGITAL SUBSCRIBER LINE (HDSL) COMPATIBLE LOOP																
	4 Wire Unbundled HDSL Loop including manual service inquiry and facility reservation - Zone 1		1	UHL	UHL4X	10.86	193.31	138.98	77.15	12.61						
	4-Wire Unbundled HDSL Loop including manual service inquiry and facility reservation - Zone 2		2	UHL	UHL4X	15.44	193.31	138.98	77.15	12.61						
	4-Wire Unbundled HDSL Loop including manual service inquiry and facility reservation - Zone 3		3	UHL	UHL4X	27.39	193.31	138.98	77.15	12.61						
	Order Coordination for Specified Conversion Time (per LSR)			UHL	OCOSL		23.02									
	4-Wire Unbundled HDSL Loop without manual service inquiry and facility reservation - Zone 1		1	UHL	UHL4W	10.86	168.62	115.47	62.74	11.22						
	4-Wire Unbundled HDSL Loop without manual service inquiry and facility reservation - Zone 2		2	UHL	UHL4W	15.44	168.62	115.47	62.74	11.22						
	4-Wire Unbundled HDSL Loop without manual service inquiry and facility reservation - Zone 3		3	UHL	UHL4W	27.39	168.62	115.47	62.74	11.22						
	Order Coordination for Specified Conversion Time (per LSR)			UHL	OCOSL		23.02									
	CLEC to CLEC Conversion Charge without outside dispatch			UHL	UREWO		86.12	40.39								
4-WIRE DS1 DIGITAL LOOP																
	4-Wire DS1 Digital Loop - Zone 1		1	USL	USLXX	70.74	313.75	181.48	61.22	13.53						
	4-Wire DS1 Digital Loop - Zone 2		2	USL	USLXX	100.54	313.75	181.48	61.22	13.53						
	4-Wire DS1 Digital Loop - Zone 3		3	USL	USLXX	178.39	313.75	181.48	61.22	13.53						
	Order Coordination for Specified Conversion Time (per LSR)			USL	OCOSL		23.02									

UNBUNDLED NETWORK ELEMENTS - Florida														Attachment: 2		Exhibit: A	
CATEGORY	RATE ELEMENTS	Interim	Zone	BCS	USOC	RATES ($)					Svc Order Submitted Elec per LSR	Svc Order Submitted Manually per LSR	Incremental Charge - Manual Svc Order vs. Electronic-1st	Incremental Charge - Manual Svc Order vs. Electronic-Add'l	Incremental Charge - Manual Svc Order vs. Electronic-Disc 1st	Incremental Charge - Manual Svc Order vs. Electronic-Disc Add'l
						Rec	Nonrecurring		Nonrecurring Disconnect		OSS Rates ($)					
							First	Add'l	First	Add'l	SOMEC	SOMAN	SOMAN	SOMAN	SOMAN	SOMAN
	CLEC to CLEC Conversion Charge without outside dispatch			USL	UREWO		101.07	43.04								
4-WIRE 19.2, 56 OR 64 KBPS DIGITAL GRADE LOOP																
	4 Wire Unbundled Digital 19.2 Kbps		1	UDL	UDL19	22.20	161.56	108.85	67.08	15.56						
	4 Wire Unbundled Digital 19.2 Kbps		2	UDL	UDL19	31.56	161.56	108.85	67.08	15.56						
	4 Wire Unbundled Digital 19.2 Kbps		3	UDL	UDL19	55.99	161.56	108.85	67.08	15.56						
	4 Wire Unbundled Digital Loop 56 Kbps - Zone 1		1	UDL	UDL56	22.20	161.56	108.85	67.08	15.56						
	4 Wire Unbundled Digital Loop 56 Kbps - Zone 2		2	UDL	UDL56	31.56	161.56	108.85	67.08	15.56						
	4 Wire Unbundled Digital Loop 56 Kbps - Zone 3		3	UDL	UDL56	55.99	161.56	108.85	67.08	15.56						
	Order Coordination for Specified Conversion Time (per LSR)			UDL	OCOSL		23.02									
	4 Wire Unbundled Digital Loop 64 Kbps - Zone 1		1	UDL	UDL64	22.20	161.56	108.85	67.08	15.56						
	4 Wire Unbundled Digital Loop 64 Kbps - Zone 2		2	UDL	UDL64	31.56	161.56	108.85	67.08	15.56						
	4 Wire Unbundled Digital Loop 64 Kbps - Zone 3		3	UDL	UDL64	55.99	161.56	108.85	67.08	15.56						
	Order Coordination for Specified Conversion Time (per LSR)			UDL	OCOSL		23.02									
	CLEC to CLEC Conversion Charge without outside dispatch			UDL	UREWO		102.11	49.74								
2-WIRE Unbundled COPPER LOOP																
	2-Wire Unbundled Copper Loop-Designed including manual service inquiry & facility reservation - Zone 1		1	UCL	UCLPB	8.30	148.50	102.82	75.05	15.63						
	2-Wire Unbundled Copper Loop-Designed including manual service inquiry & facility reservation - Zone 2		2	UCL	UCLPB	11.80	148.50	102.82	75.05	15.63						
	2 Wire Unbundled Copper Loop-Designed including manual service inquiry & facility reservation - Zone 3		3	UCL	UCLPB	20.94	148.50	102.82	75.05	15.63						
	Order Coordination for Unbundled Copper Loops (per loop)			UCL	UCLMC		9.00	9.00								
	2-Wire Unbundled Copper Loop-Designed without manual service inquiry and facility reservation - Zone 1		1	UCL	UCLPW	8.30	123.81	70.09	60.64	9.12						
	2-Wire Unbundled Copper Loop-Designed without manual service inquiry and facility reservation - Zone 2		2	UCL	UCLPW	11.80	123.81	70.09	60.64	9.12						
	2-Wire Unbundled Copper Loop-Designed without manual service inquiry and facility reservation - Zone 3		3	UCL	UCLPW	20.94	123.81	70.09	60.64	9.12						
	Order Coordination for Unbundled Copper Loops (per loop)			UCL	UCLMC		9.00	9.00								
	CLEC to CLEC Conversion Charge without outside dispatch (UCL -Des)			UCL	UREWO		97.21	42.47								
4-WIRE COPPER LOOP																
	4-Wire Copper Loop-Designed including manual service inquiry and facility reservation - Zone 1		1	UCL	UCL4S	11.83	177.87	132.76	77.15	17.73						
	4-Wire Copper Loop-Designed including manual service inquiry and facility reservation - Zone 2		2	UCL	UCL4S	16.81	177.87	132.76	77.15	17.73						
	4-Wire Copper Loop-Designed including manual service inquiry and facility reservation - Zone 3		3	UCL	UCL4S	29.82	177.87	132.76	77.15	17.73						
	Order Coordination for Unbundled Copper Loops (per loop)			UCL	UCLMC		9.00	9.00								
	4-Wire Copper Loop-Designed without manual service inquiry and facility reservation - Zone 1		1	UCL	UCL4W	11.83	153.18	100.03	62.74	11.22						
	4-Wire Copper Loop-Designed without manual service inquiry and facility reservation - Zone 2		2	UCL	UCL4W	16.81	153.18	100.03	62.74	11.22						
	4-Wire Copper Loop-Designed without manual service inquiry and facility reservation - Zone 3		3	UCL	UCL4W	29.82	153.18	100.03	62.74	11.22						
	Order Coordination for Unbundled Copper Loops (per loop)			UCL	UCLMC		9.00	9.00								
	CLEC to CLEC Conversion Charge without outside dispatch			UCL	UREWO		97.21	42.47								
LOOP MODIFICATION																
	Unbundled Loop Modification, Removal of Load Coils - 2 Wire pair less than or equal to 18k ft, per Unbundled Loop			UAL, UHL, UCL, UEQ, ULS, UEA, UEANL, UEPSR, UEPSB	ULM2L		0.00	0.00								
	Unbundled Loop Modification Removal of Load Coils - 4 Wire less than or equal to 18K ft, per Unbundled Loop			UHL, UCL, UEA	ULM4L		0.00	0.00								
	Unbundled Loop Modification Removal of Bridged Tap Removal, per unbundled loop			UAL, UHL, UCL, UEQ, ULS, UEA, UEANL, UEPSR, UEPSB	ULMBT		10.52	10.52								
SUB-LOOPS																

UNBUNDLED NETWORK ELEMENTS - Florida														Attachment: 2		Exhibit: A	
CATEGORY		RATE ELEMENTS	Interim	Zone	BCS	USOC	RATES ($)					Svc Order Submitted Elec per LSR	Svc Order Submitted Manually per LSR	Incremental Charge - Manual Svc Order vs. Electronic-1st	Incremental Charge - Manual Svc Order vs. Electronic-Add'l	Incremental Charge - Manual Svc Order vs. Electronic-Disc 1st	Incremental Charge - Manual Svc Order vs. Electronic-Disc Add'l
							Rec	Nonrecurring		Nonrecurring Disconnect		OSS Rates ($)					
								First	Add'l	First	Add'l	SOMEC	SOMAN	SOMAN	SOMAN	SOMAN	SOMAN
	Sub-Loop Distribution																
		Sub-Loop - Per Cross Box Location - CLEC Feeder Facility Set-Up	I		UEANL	USBSA		487.23									
		Sub-Loop - Per Cross Box Location - Per 25 Pair Panel Set-Up	I		UEANL	USBSB		6.25									
		Sub-Loop - Per Building Equipment Room - CLEC Feeder Facility Set-Up	I		UEANL	USBSC		169.25									
		Sub-Loop - Per Building Equipment Room - Per 25 Pair Panel Set-Up	I		UEANL	USBSD		38.65									
		Sub-Loop Distribution Per 2-Wire Analog Voice Grade Loop - Zone 1		1	UEANL	USBN2	6.46	60.19	21.78	47.50	5.26						
		Sub-Loop Distribution Per 2-Wire Analog Voice Grade Loop - Zone 2		2	UEANL	USBN2	9.18	60.19	21.78	47.50	5.26						
		Sub-Loop Distribution Per 2-Wire Analog Voice Grade Loop - Zone 3		3	UEANL	USBN2	16.29	60.19	21.78	47.50	5.26						
		Order Coordination for Unbundled Sub-Loops, per sub-loop pair			UEANL	USBMC		9.00	9.00								
		Sub-Loop Distribution Per 4-Wire Analog Voice Grade Loop - Zone 1		1	UEANL	USBN4	7.37	68.83	30.42	49.71	6.60						
		Sub-Loop Distribution Per 4-Wire Analog Voice Grade Loop - Zone 2		2	UEANL	USBN4	10.47	68.83	30.42	49.71	6.60						
		Sub-Loop Distribution Per 4-Wire Analog Voice Grade Loop - Zone 3		3	UEANL	USBN4	18.58	68.83	30.42	49.71	6.60						
		Order Coordination for Unbundled Sub-Loops, per sub-loop pair			UEANL	USBMC		9.00	9.00								
		Sub-Loop 2-Wire Intrabuilding Network Cable (INC)	I		UEANL	USBR2	3.96	51.84	13.44	47.50	5.26						
		Order Coordination for Unbundled Sub-Loops, per sub-loop pair			UEANL	USBMC		9.00	9.00								
		Sub-Loop 4-Wire Intrabuilding Network Cable (INC)	I		UEANL	USBR4	9.37	55.91	17.51	49.71	6.60						
		Order Coordination for Unbundled Sub-Loops, per sub-loop pair			UEANL	USBMC		9.00	9.00								
		Loop Testing - Basic 1st Half Hour			UEANL	URET1		48.65	48.65								
		Loop Testing - Basic Additional Half Hour			UEANL	URETA		23.95	23.95								
		2 Wire Copper Unbundled Sub-Loop Distribution - Zone 1	I	1	UEF	UCS2X	5.15	60.19	21.78	47.50	5.26						
		2 Wire Copper Unbundled Sub-Loop Distribution - Zone 2	I	2	UEF	UCS2X	7.31	60.19	21.78	47.50	5.26						
		2 Wire Copper Unbundled Sub-Loop Distribution - Zone 3	I	3	UEF	UCS2X	12.98	60.19	21.78	47.50	5.26						
		Order Coordination for Unbundled Sub-Loops, per sub-loop pair			UEF	USBMC		9.00	9.00								
		4 Wire Copper Unbundled Sub-Loop Distribution - Zone 1	I	1	UEF	UCS4X	5.36	68.83	30.42	49.71	6.60						
		4 Wire Copper Unbundled Sub-Loop Distribution - Zone 2	I	2	UEF	UCS4X	7.61	68.83	30.42	49.71	6.60						
		4 Wire Copper Unbundled Sub-Loop Distribution - Zone 3	I	3	UEF	UCS4X	13.51	68.83	30.42	49.71	6.60						
		Order Coordination for Unbundled Sub-Loops, per sub-loop pair			UEF	USBMC		9.00	9.00								
		Loop Testing - Basic 1st Half Hour			UEF	URET1		48.65	48.65								
		Loop Testing - Basic Additional Half Hour			UEF	URETA		23.95	23.95								
	Unbundled Network Terminating Wire (UNTW)																
		Unbundled Network Terminating Wire (UNTW) per Pair			UENTW	UENPP	0.4572	18.02									
	Network Interface Device (NID)																
		Network Interface Device (NID) - 1-2 lines			UENTW	UND12		71.49	48.87								
		Network Interface Device (NID) - 1-6 lines			UENTW	UND16		113.89	89.07								
		Network Interface Device Cross Connect - 2 W			UENTW	UNDC2		7.63	7.63								
		Network Interface Device Cross Connect - 4W			UENTW	UNDC4		7.63	7.63								
UNE OTHER, PROVISIONING ONLY - NO RATE																	
		NID - Dispatch and Service Order for NID installation			UENTW	UNDBX	0.00	0.00									
		UNTW Circuit Id Establishment, Provisioning Only - No Rate			UENTW	UENCE	0.00	0.00									
		Unbundled Contract Name, Provisioning Only - No Rate			UEANL,UEF,UEQ,UENTW	UNECN	0.00	0.00									
UNE OTHER, PROVISIONING ONLY - NO RATE																	

UNBUNDLED NETWORK ELEMENTS - Florida														Attachment: 2		Exhibit: A	
CATEGORY		RATE ELEMENTS	Interim	Zone	BCS	USOC	RATES ($)					Svc Order Submitted Elec per LSR	Svc Order Submitted Manually per LSR	Incremental Charge - Manual Svc Order vs. Electronic-1st	Incremental Charge - Manual Svc Order vs. Electronic-Add'l	Incremental Charge - Manual Svc Order vs. Electronic-Disc 1st	Incremental Charge - Manual Svc Order vs. Electronic-Disc Add'l
							Rec	Nonrecurring		Nonrecurring Disconnect		OSS Rates ($)					
								First	Add'l	First	Add'l	SOMEC	SOMAN	SOMAN	SOMAN	SOMAN	SOMAN
		Unbundled Contact Name, Provisioning Only - no rate			UAL,UCL,UDC,UDL, UDN,UEA,UHL,ULC	UNECN	0.00	0.00									
		Unbundled Sub-Loop Feeder-2 Wire Cross Box Jumper - no rate			UEA,UDN,UCL,UDC	USBFQ	0.00	0.00									
		Unbundled Sub-Loop Feeder-4 Wire Cross Box Jumper - no rate			UEA,USL,UCL,UDL	USBFR	0.00	0.00									
		Unbundled DS1 Loop - Superframe Format Option - no rate			USL	CCOSF	0.00	0.00									
		Unbundled DS1 Loop - Expanded Superframe Format option - no rate			USL	CCOEF	0.00	0.00									
HIGH CAPACITY UNBUNDLED LOCAL LOOP																	
		High Capacity Unbundled Local Loop - DS3 - Per Mile per month			UE3	1L5ND	10.92										
		High Capacity Unbundled Local Loop - DS3 - Facility Termination per month			UE3	UE3PX	386.88	556.37	343.01	139.13	96.84						
		High Capacity Unbundled Local Loop - STS-1 - Per Mile per month			UDLSX	1L5ND	10.92										
		High Capacity Unbundled Local Loop - STS-1 - Facility Termination per month			UDLSX	UDLS1	426.60	556.37	343.01	139.13	96.84						
LOOP MAKE-UP																	
		Loop Makeup - Preordering Without Reservation, per working or spare facility queried (Manual).			UMK	UMKLW		52.17	52.17								
		Loop Makeup - Preordering With Reservation, per spare facility queried (Manual).			UMK	UMKLP		55.07	55.07								
		Loop Makeup--With or Without Reservation, per working or spare facility queried (Mechanized)			UMK	UMKMQ		0.6784	0.6784								
LINE SHARING AND LINE SPLITTING																	
	NOTE 1: The Line Sharing monthly recurring rates for all installations completed from October 02, 2003 through midnight October 01, 2004 shall be billed as follows:																
	NOTE 1: 10/02/2003 – 10/01/2004: 25% of the rate for an unbundled copper loop non-designed ("UCLND")																
	NOTE 1: 10/02/2004 – 10/01/2005: 50% of the rate for UCLND																
	NOTE 1: 10/02/2005 – 10/01/2006: 75% of the rate for UCLND																
	NOTE 1: Above will apply to USOCS: ULSDT and ULSCT																
	****NOTE 2: The Line Sharing monthly recurring rates with USOCs ULSDC and ULSCC applies only to circuits installed and inservice on or before October 1, 2003**																
	LINE SHARING																
	SPLITTERS-CENTRAL OFFICE BASED																
		Line Sharing Splitter, per System 96 Line Capacity			ULS	ULSDA	119.72	379.13	0.00	347.90	0.00						
		Line Sharing Splitter, per System 24 Line Capacity			ULS	ULSDB	29.93	379.13	0.00	347.90	0.00						
		Line Sharing Splitter, Per System, 8 Line Capacity			ULS	ULSD8	8.33	379.13	0.00	347.90	0.00						
		Line Sharing-DLEC Owned Splitter in CO-CFA activaton-deactivation (per LSOD)			ULS	ULSDG		173.66	0.00	97.42	0.00						
	END USER ORDERING-CENTRAL OFFICE BASED LINE SHARING																
		Line Sharing - per Line Activation (BST Owned splitter) - OBSOLETE see **NOTE 2			ULS	ULSDC	0.61	29.68	21.28	19.57	9.61						
		Line Share Service, TRO per line activation, BST owned splitter - Central Office Located (25% of UCLND) - please see NOTE 1 (E:10/2/2003)			ULS	ULSDT	1.99	29.68	21.28	19.57	9.61						
		Line Share Service, TRO per line activation, BST owned splitter - Central Office Located (50% of UCLND) - please see NOTE 1 (E:10/2/2004)			ULS	ULSDT	3.98	29.68	21.28	19.57	9.61						
		Line Share Service, TRO per line activation, BST owned splitter - Central Office Located (75% of UCLND) - please see NOTE 1 (E:10/2/2005)			ULS	ULSDT	5.97	29.68	21.28	19.57	9.61						
		Line Sharing - per Subsequent Activity per Line Rearrangement - (BST Owned Splitter)			ULS	ULSDS		21.68	16.44								
		Line Sharing - per Subsequent Activity per Line Rearrangement - (DLEC Owned Splitter)			ULS	ULSCS		21.68	16.44								
		Line Sharing - per Line Activation (DLEC owned Splitter) - OBSOLETE see **NOTE 2			ULS	ULSCC	0.61	47.44	19.31	20.67	12.74						

UNBUNDLED NETWORK ELEMENTS - Florida														Attachment: 2		Exhibit: A	
CATEGORY		RATE ELEMENTS	Interim	Zone	BCS	USOC	RATES ($)					Svc Order Submitted Elec per LSR	Svc Order Submitted Manually per LSR	Incremental Charge - Manual Svc Order vs. Electronic-1st	Incremental Charge - Manual Svc Order vs. Electronic-Add'l	Incremental Charge - Manual Svc Order vs. Electronic-Disc 1st	Incremental Charge - Manual Svc Order vs. Electronic-Disc Add'l
							Rec	Nonrecurring		Nonrecurring Disconnect		OSS Rates ($)					
								First	Add'l	First	Add'l	SOMEC	SOMAN	SOMAN	SOMAN	SOMAN	SOMAN
		Line Share Service, TRO per line activation, CLEC owned splitter - Central Office Located (25% of UCLND) - please see NOTE 1 (E:10/2/2003)			ULS	ULSCT	1.99	47.44	19.31	20.67	12.74						
		Line Share Service, TRO per line activation, CLEC owned splitter - Central Office Located (50% of UCLND) - please see NOTE 1 (E:10/2/2004)			ULS	ULSCT	3.98	47.44	19.31	20.67	12.74						
		Line Share Service, TRO per line activation, CLEC owned splitter - Central Office Located (75% of UCLND) - please see NOTE 1 (E:10/2/2005)			ULS	ULSCT	5.97	47.44	19.31	20.67	12.74						
	LINE SPLITTING																
	END USER ORDERING-CENTRAL OFFICE BASED																
		Line Splitting - per line activation DLEC owned splitter			UEPSR UEPSB	UREOS	0.61										
		Line Splitting - per line activation BST owned - physical			UEPSR UEPSB	UREBP	0.61	29.68	21.28	19.57	9.61						
		Line Splitting - per line activation BST owned - virtual			UEPSR UEPSB	UREBV	1.134	29.68	21.28	19.57	9.61						
	MAINTENANCE																
		No Trouble Found - per 1/2 hour increments - Basic						80.00	55.00								
		No Trouble Found - per 1/2 hour increments - Overtime						120.00	82.50								
		No Trouble Found - per 1/2 hour increments - Premium						160.00	110.00								
UNBUNDLED DEDICATED TRANSPORT																	
	INTEROFFICE CHANNEL - DEDICATED TRANSPORT																
		Interoffice Channel - Dedicated Transport - 2-Wire Voice Grade - Per Mile per month			U1TVX	1L5XX	0.0091										
		Interoffice Channel - Dedicated Transport- 2- Wire Voice Grade - Facility Termination			U1TVX	U1TV2	25.32	47.35	31.78	18.31	7.03						
		Interoffice Channel - Dedicated Transpor t- 2-Wire Voice Grade Rev Bat. - Per Mile per month			U1TVX	1L5XX	0.0091										
		Interoffice Channel - Dedicated Transport- 2- Wire VG Rev Bat. - Facility Termination			U1TVX	U1TR2	25.32	47.35	31.78	18.31	7.03						
		Interoffice Channel - Dedicated Transport - 4-Wire Voice Grade - Per Mile per month			U1TVX	1L5XX	0.0091										
		Interoffice Channel - Dedicated Transport - 4- Wire Voice Grade - Facility Termination			U1TVX	U1TV4	22.58	47.35	31.78	18.31	7.03						
		Interoffice Channel - Dedicated Transport - 56 kbps - per mile per month			U1TDX	1L5XX	0.0091										
		Interoffice Channel - Dedicated Transport - 56 kbps - Facility Termination			U1TDX	U1TD5	18.44	47.35	31.78	18.31	7.03						
		Interoffice Channel - Dedicated Transport - 64 kbps - per mile per month			U1TDX	1L5XX	0.0091										
		Interoffice Channel - Dedicated Transport - 64 kbps - Facility Termination			U1TDX	U1TD6	18.44	47.35	31.78	18.31	7.03						
		Interoffice Channel - Dedicated Channel - DS1 - Per Mile per month			U1TD1	1L5XX	0.1856										
		Interoffice Channel - Dedicated Tranport - DS1 - Facility Termination			U1TD1	U1TF1	88.44	105.54	98.47	21.47	19.05						
		Interoffice Channel - Dedicated Transport - DS3 - Per Mile per month			U1TD3	1L5XX	3.87										
		Interoffice Channel - Dedicated Transport - DS3 - Facility Termination per month			U1TD3	U1TF3	1,071.00	335.46	219.28	72.03	70.56						
		Interoffice Channel - Dedicated Transport - STS-1 - Per Mile per month			U1TS1	1L5XX	3.87										
		Interoffice Channel - Dedicated Transport - STS-1 - Facility Termination			U1TS1	U1TFS	1,056.00	335.46	219.28	72.03	70.56						
DARK FIBER																	
		Dark Fiber, Four Fiber Strands, Per Route Mile or Fraction Thereof per month - Interoffice Channel			UDF, UDFCX	1L5DF	26.85										
		NRC Dark Fiber - Interoffice Channel			UDF, UDFCX	UDF14		751.34	193.88	356.21	230.11						
		Dark Fiber, Four Fiber Strands, Per Route Mile or Fraction Thereof per month - Local Loop			UDF, UDFCX	1L5DL	55.04										
		NRC Dark Fiber - Local Loop			UDF, UDFCX	UDFL4		751.34	193.88	356.21	230.11						

UNBUNDLED NETWORK ELEMENTS - Florida													Attachment: 2		Exhibit: A	
CATEGORY		RATE ELEMENTS	Interim	Zone	BCS	USOC	RATES ($)					Svc Order Submitted Elec per LSR	Svc Order Submitted Manually per LSR	Incremental Charge - Manual Svc Order vs. Electronic-1st	Incremental Charge - Manual Svc Order vs. Electronic-Add'l	Incremental Charge - Manual Svc Order vs. Electronic-Disc 1st	Incremental Charge - Manual Svc Order vs. Electronic-Disc Add'l
							Rec	Nonrecurring		Nonrecurring Disconnect		OSS Rates ($)					
								First	Add'l	First	Add'l	SOMEC	SOMAN	SOMAN	SOMAN	SOMAN	SOMAN
8XX ACCESS TEN DIGIT SCREENING																	
		8XX Access Ten Digit Screening, Per Call			OHD		0.0006252										
		8XX Access Ten Digit Screening, Reservation Charge Per 8XX Number Reserved			OHD	N8R1X		4.15	0.70								
		8XX Access Ten Digit Screening, Per 8XX No. Established W/O POTS Translations			OHD			8.78	1.18	5.77	0.70						
		8XX Access Ten Digit Screening, Per 8XX No. Established With POTS Translations			OHD	N8FTX		8.78	1.18	5.77	0.70						
		8XX Access Ten Digit Screening, Customized Area of Service Per 8XX Number			OHD	N8FCX		4.15	2.07								
		8XX Access Ten Digit Screening, Multiple InterLATA CXR Routing Per CXR Requested Per 8XX No.			OHD	N8FMX		4.85	2.78								
		8XX Access Ten Digit Screening, Change Charge Per Request			OHD	N8FAX		4.85	0.70								
		8XX Access Ten Digit Screening, Call Handling and Destination Features			OHD	N8FDX		4.15	4.15								
		8XX Access Ten Digit Screening, w/ 8FL No. Delivery, per query			OHD		0.0006252										
		8XX Access Ten Digit Screening, w/ POTS No. Delivery, per query			OHD		0.0006252										
LINE INFORMATION DATA BASE ACCESS (LIDB)																	
		LIDB Common Transport Per Query			OQT		0.0000203										
		LIDB Validation Per Query			OQU		0.0136959										
		LIDB Originating Point Code Establishment or Change			OQT, OQU	NRBPX		55.13	55.13	55.13	55.13						
SIGNALING (CCS7)																	
		CCS7 Signaling Termination, Per STP Port			UDB	PT8SX	135.05										
		CCS7 Signaling Usage, Per TCAP Message			UDB		0.0000607										
		CCS7 Signaling Connection, Per link (A link)			UDB	TPP++	17.93	43.57	43.57	18.31	18.31						
		CCS7 Signaling Connection, Per link (B link) (also known as D link)			UDB	TPP++	17.93	43.57	43.57	18.31	18.31						
		CCS7 Signaling Usage, Per ISUP Message			UDB		0.0000152										
		CCS7 Signaling Usage Surrogate, per link per LATA			UDB	STU56	694.32										
		CCS7 Signaling Point Code, per Originating Point Code Establishment or Change, per STP affected			UDB	CCAPO		46.03	46.03	46.03	46.03						
E911 SERVICE																	
		Local Channel - Dedicated - 2-wr Voice Grade - Zone 1					21.94	265.84	46.97	37.63	4.00						
		Local Channel - Dedicated - 2-wr Voice Grade - Zone 2					29.62	265.84	46.97	37.63	4.00						
		Local Channel - Dedicated - 2-wr Voice Grade - Zone 3					57.22	265.84	46.97	37.63	4.00						
		Interoffice Transport - Dedicated - 2-wr Voice Grade Per Mile					0.0091										
		Interoffice Transport - Dedicated - 2-wr Voice Grade Per Facility Termination					25.32	47.35	31.78	18.31	7.03						
		Local Channel - Dedicated - DS1 - Zone 1					35.28	216.65	183.54	21.47	19.05						
		Local Channel - Dedicated - DS1 - Zone 2					47.63	216.65	183.54	21.47	19.05						
		Local Channel - Dedicated - DS1 - Zone 3					92.01	216.65	183.54	21.47	19.05						
		Interoffice Transport - Dedicated - DS1 Per Mile					0.1856										
		Interoffice Transport - Dedicated - DS1 Per Facility Termination					88.44	105.54	98.47	21.47	19.05						
CALLING NAME (CNAM) SERVICE																	
		CNAM For DB Owners - Service Establishment			OQV			25.35	25.35	19.01	19.01						
		CNAM For Non DB Owners - Service Establishment			OQV			25.35	25.35	19.01	19.01						
		CNAM For DB Owners - Service Provisioning With Point Code Establishment			OQV			1,592.00	1,177.00	352.36	259.09						
		CNAM For Non DB Owners - Service Provisioning With Point Code Establishment			OQV			546.51	393.82	358.06	259.09						
		CNAM for DB Owners, Per Query			OQV		0.001024										
		CNAM for Non DB Owners, Per Query			OQV		0.001024										
SELECTIVE ROUTING																	
		Selective Routing Per Unique Line Class Code Per Request Per Switch						93.55	93.55	12.71	12.71						
VIRTUAL COLLOCATION																	

UNBUNDLED NETWORK ELEMENTS - Florida														Attachment: 2		Exhibit: A	
CATEGORY		RATE ELEMENTS	Interim	Zone	BCS	USOC	RATES ($)					Svc Order Submitted Elec per LSR	Svc Order Submitted Manually per LSR	Incremental Charge - Manual Svc Order vs. Electronic-1st	Incremental Charge - Manual Svc Order vs. Electronic-Add'l	Incremental Charge - Manual Svc Order vs. Electronic-Disc 1st	Incremental Charge - Manual Svc Order vs. Electronic-Disc Add'l
							Rec	Nonrecurring		Nonrecurring Disconnect		OSS Rates ($)					
								First	Add'l	First	Add'l	SOMEC	SOMAN	SOMAN	SOMAN	SOMAN	SOMAN
		Virtual Collocation-2 Wire Cross Connects (Loop) for Line Splitting			UEPSR UEPSB	VE1LS	0.0502	11.57	11.57	0.00	0.00						
PHYSICAL COLLOCATION																	
		Physical Collocation-2 Wire Cross Connects (Loop) for Line Splitting			UEPSR UEPSB	PE1LS	0.0276	8.22	7.22	5.74	4.58						
AIN SELECTIVE CARRIER ROUTING																	
		Regional Service Establishment			SRC	SRCEC		193,444.00		7,737.00							
		End Office Establishment			SRC	SRCEO		187.36	187.36	0.69	0.69						
		Query NRC, per query			SRC		0.0031868										
AIN - BELLSOUTH AIN SMS ACCESS SERVICE																	
		AIN SMS Access Service - Service Establishment, Per State, Initial Setup			A1N	CAMSE		43.56	43.56	44.93	44.93						
		AIN SMS Access Service - Port Connection - Dial/Shared Access			A1N	CAMDP		8.64	8.64	10.03	10.03						
		AIN SMS Access Service - Port Connection - ISDN Access			A1N	CAM1P		8.64	8.64	10.03	10.03						
		AIN SMS Access Service - User Identification Codes - Per User ID Code			A1N	CAMAU		38.66	38.66	29.88	29.88						
		AIN SMS Access Service - Security Card, Per User ID Code, Initial or Replacement			A1N	CAMRC		75.10	75.10	12.93	12.93						
		AIN SMS Access Service - Storage, Per Unit (100 Kilobytes)					0.0028										
		AIN SMS Access Service - Session, Per Minute					0.7809										
		AIN SMS Access Service - Company Performed Session, Per Minute					0.4609										
AIN - BELLSOUTH AIN TOOLKIT SERVICE																	
		AIN Toolkit Service - Service Establishment Charge, Per State, Initial Setup			CAM	BAPSC		43.56	43.56	44.93	44.93						
		AIN Toolkit Service - Training Session, Per Customer				BAPVX		8,439.00	8,439.00								
		AIN Toolkit Service - Trigger Access Charge, Per Trigger, Per DN, Term. Attempt				BAPTT		8.64	8.64	10.03	10.03						
		AIN Toolkit Service - Trigger Access Charge, Per Trigger, Per DN, Off-Hook Delay				BAPTD		8.64	8.64	10.03	10.03						
		AIN Toolkit Service - Trigger Access Charge, Per Trigger, Per DN, Off-Hook Immediate				BAPTM		8.64	8.64	10.03	10.03						
		AIN Toolkit Service - Trigger Access Charge, Per Trigger, Per DN, 10-Digit PODP				BAPTO		38.06	38.06	15.86	15.86						
		AIN Toolkit Service - Trigger Access Charge, Per Trigger, Per DN, CDP				BAPTC		38.06	38.06	15.86	15.86						
		AIN Toolkit Service - Trigger Access Charge, Per Trigger, Per DN, Feature Code				BAPTF		38.06	38.06	15.86	15.86						
		AIN Toolkit Service - Query Charge, Per Query					0.0535927										
		AIN Toolkit Service - Type 1 Node Charge, Per AIN Toolkit Subscription, Per Node, Per Query					0.0063698										
		AIN Toolkit Service - SCP Storage Charge, Per SMS Access Account, Per 100 Kilobytes					0.06										
		AIN Toolkit Service - Monthly report - Per AIN Toolkit Service Subscription			CAM	BAPMS	8.34	8.64	8.64	6.08	6.08						
		AIN Toolkit Service - Special Study - Per AIN Toolkit Service Subscription			CAM	BAPLS	3.73	9.56	9.56								
		AIN Toolkit Service - Call Event Report - Per AIN Toolkit Service Subscription			CAM	BAPDS	4.73	8.64	8.64	6.08	6.08						
		AIN Toolkit Service - Call Event Special Study - Per AIN Toolkit Service Subscription			CAM	BAPES	0.12	9.56	9.56								
ENHANCED EXTENDED LINK (EELs)																	
	NOTE: The monthly recurring and non-recurring charges below will apply and the Switch-As-Is Charge will not apply for UNE combinations provisioned as ' Ordinarily Combined' Network Elements.																
	NOTE: The monthly recurring and the Switch-As-Is Charge and not the non-recurring charges below will apply for UNE combinations provisioned as ' Currently Combined' Network Elements.																
	EXTENTED 2-WIRE VOICE GRADE EXTENDED LOOP WITH DEDICATED DS1 INTEROFFICE TRANSPORT																
		First 2-Wire VG Loop (SL2) in Combination - Zone 1		1	UNCVX	UEAL2	12.24	127.59	60.54	42.79	2.81						
		First 2-Wire VG Loop (SL2) in Combination - Zone 2		2	UNCVX	UEAL2	17.40	127.59	60.54	42.79	2.81						
		First 2-Wire VG Loop (SL2) in Combination - Zone 3		3	UNCVX	UEAL2	30.87	127.59	60.54	42.79	2.81						

UNBUNDLED NETWORK ELEMENTS - Florida														Attachment: 2		Exhibit: A	
CATEGORY		RATE ELEMENTS	Interim	Zone	BCS	USOC	RATES ($)					Svc Order Submitted Elec per LSR	Svc Order Submitted Manually per LSR	Incremental Charge - Manual Svc Order vs. Electronic-1st	Incremental Charge - Manual Svc Order vs. Electronic-Add'l	Incremental Charge - Manual Svc Order vs. Electronic-Disc 1st	Incremental Charge - Manual Svc Order vs. Electronic-Disc Add'l
							Rec	Nonrecurring		Nonrecurring Disconnect		OSS Rates ($)					
								First	Add'l	First	Add'l	SOMEC	SOMAN	SOMAN	SOMAN	SOMAN	SOMAN
		Interoffice Transport - Dedicated - DS1 combination - Per Mile per month			UNC1X	1L5XX	0.1856										
		Interoffice Transport - Dedicated - DS1 combination - Facility Termination per month			UNC1X	U1TF1	88.44	174.46	122.46	45.61	17.95						
		1/0 Channelization System in combination Per Month			UNC1X	MQ1	146.77	101.42	71.62								
		Voice Grade COCI - Per Month			UNCVX	1D1VG	1.38	10.07	7.08	0.00	0.00						
		Each Additional 2-Wire VG Loop (SL 2) in Combination - Zone 1		1	UNCVX	UEAL2	12.24	127.59	60.54	42.79	2.81						
		Each Additional 2-Wire VG Loop (SL 2) in Combination - Zone 2		2	UNCVX	UEAL2	17.40	127.59	60.54	42.79	2.81						
		Each Additional 2-Wire VG Loop (SL 2) in Combination - Zone 3		3	UNCVX	UEAL2	30.87	127.59	60.54	42.79	2.81						
		Voice Grade COCI - Per Month			UNCVX	1D1VG	1.38	10.07	7.08	0.00	0.00						
		Nonrecurring Currently Combined Network Elements Switch -As-Is Charge			UNC1X	UNCCC		8.98	8.98	8.98	8.98						
	EXTENDED 4-WIRE VOICE GRADE EXTENDED LOOP WITH DEDICATED DS1 INTEROFFICE TRANSPORT																
		First 4-Wire Analog Voice Grade Loop in Combination - Zone 1		1	UNCVX	UEAL4	18.89	127.59	60.54	42.79	2.81						
		First 4-Wire Analog Voice Grade Loop in Combination - Zone 2		2	UNCVX	UEAL4	26.84	127.59	60.54	42.79	2.81						
		First 4-Wire Analog Voice Grade Loop in Combination - Zone 3		3	UNCVX	UEAL4	47.62	127.59	60.54	42.79	2.81						
		Interoffice Transport - Dedicated - DS1 combination - Per Mile Per Month			UNC1X	1L5XX	0.1856										
		Interoffice Transport - Dedicated - DS1 - Facility Termination Per Month			UNC1X	U1TF1	88.44	174.46	122.46	45.61	17.95						
		1/0 Channel System in combination Per Month			UNC1X	MQ1	146.77	101.42	71.62								
		Voice Grade COCI in combination - per month			UNCVX	1D1VG	1.38	10.07	7.08	0.00	0.00						
		Additional 4-Wire Analog Voice Grade Loop in same DS1 Interoffice Transport Combination - Zone 1		1	UNCVX	UEAL4	18.89	127.59	60.54	42.79	2.81						
		Additional 4-Wire Analog Voice Grade Loop in same DS1 Interoffice Transport Combination - Zone 2		2	UNCVX	UEAL4	26.84	127.59	60.54	42.79	2.81						
		Additional 4-Wire Analog Voice Grade Loop in same DS1 Interoffice Transport Combination - Zone 3		3	UNCVX	UEAL4	47.62	127.59	60.54	42.79	2.81						
		Additional Voice Grade COCI in combination - per month			UNCVX	1D1VG	1.38	10.07	7.08	0.00	0.00						
		Nonrecurring Currently Combined Network Elements Switch -As-Is Charge			UNC1X	UNCCC		8.98	8.98	8.98	8.98						
	EXTENDED 4-WIRE 56 KBPS EXTENDED DIGITAL LOOP WITH DEDICATED DS1 INTEROFFICE TRANSPORT																
		First 4-Wire 56Kbps Digital Grade Loop in Combination - Zone 1		1	UNCDX	UDL56	22.20	127.59	60.54	42.79	2.81						
		First 4-Wire 56Kbps Digital Grade Loop in Combination - Zone 2		2	UNCDX	UDL56	31.56	127.59	60.54	42.79	2.81						
		First 4-Wire 56Kbps Digital Grade Loop in Combination - Zone 3		3	UNCDX	UDL56	55.99	127.59	60.54	42.79	2.81						
		Interoffice Transport - Dedicated - DS1 combination - Per Mile Per Month			UNC1X	1L5XX	0.1856										
		Interoffice Transport - Dedicated - DS1 - combination Facility Termination Per Month			UNC1X	U1TF1	88.44	174.46	122.46	45.61	17.95						
		1/0 Channel System in combination Per Month			UNC1X	MQ1	146.77	101.42	71.62								
		OCU-DP COCI (data) per month (2.4-64kbs)			UNCDX	1D1DD	2.10	10.07	7.08	0.00	0.00						
		Additional 4-Wire 56Kbps Digital Grade Loop in same DS1 Interoffice Transport Combination - Zone 1		1	UNCDX	UDL56	22.20	127.59	60.54	42.79	2.81						
		Additional 4-Wire 56Kbps Digital Grade Loop in same DS1 Interoffice Transport Combination - Zone 2		2	UNCDX	UDL56	31.56	127.59	60.54	42.79	2.81						
		Additional 4-Wire 56Kbps Digital Grade Loop in same DS1 Interoffice Transport Combination - Zone 3		3	UNCDX	UDL56	55.99	127.59	60.54	42.79	2.81						
		Additional OCU-DP COCI (data) - in combination per month (2.4-64kbs)			UNCDX	1D1DD	2.10	10.07	7.08	0.00	0.00						

CATEGORY	RATE ELEMENTS	Interim	Zone	BCS	USOC	RATES ($)					Svc Order Submitted Elec per LSR	Svc Order Submitted Manually per LSR	Attachment: 2 Incremental Charge - Manual Svc Order vs. Electronic-1st	Attachment: 2 Incremental Charge - Manual Svc Order vs. Electronic-Add'l	Exhibit: A Incremental Charge - Manual Svc Order vs. Electronic-Disc 1st	Exhibit: A Incremental Charge - Manual Svc Order vs. Electronic-Disc Add'l
						Rec	Nonrecurring		Nonrecurring Disconnect		OSS Rates ($)					
							First	Add'l	First	Add'l	SOMEC	SOMAN	SOMAN	SOMAN	SOMAN	SOMAN
	Nonrecurring Currently Combined Network Elements Switch -As-Is Charge			UNC1X	UNCCC		8.98	8.98	8.98	8.98						
	EXTENDED 4-WIRE 64 KBPS EXTENDED DIGITAL LOOP WITH DEDICATED DS1 INTEROFFICE TRANSPORT															
	First 4-Wire 64Kbps Digital Grade Loop in Combination - Zone 1		1	UNCDX	UDL64	22.20	127.59	60.54	42.79	2.81						
	First 4-Wire 64Kbps Digital Grade Loop in Combination - Zone 2		2	UNCDX	UDL64	31.56	127.59	60.54	42.79	2.81						
	First 4-Wire 64Kbps Digital Grade Loop in Combination - Zone 3		3	UNCDX	UDL64	55.99	127.59	60.54	42.79	2.81						
	Interoffice Transport - Dedicated - DS1 combination - Per Mile Per Month			UNC1X	1L5XX	0.1856										
	interoffice Transport - Dedicated - DS1 combination - Facility Termination Per Month			UNC1X	U1TF1	88.44	174.46	122.46	45.61	17.95						
	1/0 Channel System in combination Per Month			UNC1X	MQ1	146.77	101.42	71.62								
	OCU-DP COCI (data) - in combination - per month (2.4-64kbs)			UNCDX	1D1DD	2.10	10.07	7.08	0.00	0.00						
	Additional 4-Wire 64Kbps Digital Grade Loop in same DS1 Interoffice Transport Combination - Zone 1		1	UNCDX	UDL64	22.20	127.59	60.54	42.79	2.81						
	Additional 4-Wire 64Kbps Digital Grade Loop in same DS1 Interoffice Transport Combination - Zone 2		2	UNCDX	UDL64	31.56	127.59	60.54	42.79	2.81						
	Additional 4-Wire 64Kbps Digital Grade Loop in same DS1 Interoffice Transport Combination - Zone 3		3	UNCDX	UDL64	55.99	127.59	60.54	42.79	2.81						
	Additional OCU-DP COCI (data) - in combination - per month (2.4-64kbs)			UNCDX	1D1DD	2.10	10.07	7.08	0.00	0.00						
	Nonrecurring Currently Combined Network Elements Switch -As-Is Charge			UNC1X	UNCCC		8.98	8.98	8.98	8.98						
	EXTENDED 4-WIRE DS1 DIGITAL EXTENDED LOOP WITH DEDICATED DS1 INTEROFFICE TRANSPORT															
	4-Wire DS1 Digital Loop in Combination - Zone 1		1	UNC1X	USLXX	70.74	217.75	121.62	51.44	14.45						
	4-Wire DS1 Digital Loop in Combination - Zone 2		2	UNC1X	USLXX	100.54	217.75	121.62	51.44	14.45						
	4-Wire DS1 Digital Loop in Combination - Zone 3		3	UNC1X	USLXX	178.39	217.75	121.62	51.44	14.45						
	Interoffice Transport - Dedicated - DS1 combination - Per Mile Per Month			UNC1X	1L5XX	0.1856										
	Interoffice Transport - Dedicated - DS1 combination - Facility Termination Per Month			UNC1X	U1TF1	88.44	174.46	122.46	45.61	17.95						
	Nonrecurring Currently Combined Network Elements Switch -As-Is Charge			UNC1X	UNCCC		8.98	8.98	8.98	8.98						
	EXTENDED 4-WIRE DS1 DIGITAL EXTENDED LOOP WITH DEDICATED DS3 INTEROFFICE TRANSPORT															
	First DS1Loop in Combination - Zone 1		1	UNC1X	USLXX	70.74	217.75	121.62	51.44	14.45						
	First DS1Loop in Combination - Zone 2		2	UNC1X	USLXX	100.54	217.75	121.62	51.44	14.45						
	First DS1Loop in Combination - Zone 3		3	UNC1X	USLXX	178.39	217.75	121.62	51.44	14.45						
	Interoffice Transport - Dedicated - DS3 combination - Per Mile Per Month			UNC3X	1L5XX	3.87										
	Interoffice Transport - Dedicated - DS3 - Facility Termination per month			UNC3X	U1TF3	1,071.00	314.45	130.88	38.60	18.23						
	3/1Channel System in combination per month			UNC3X	MQ3	211.19	199.28	118.64	40.34	39.07						
	DS1 COCI in combination per month			UNC1X	UC1D1	13.76	10.07	7.08	0.00	0.00						
	Additional DS1Loop in DS3 Interoffice Transport Combination - Zone 1		1	UNC1X	USLXX	70.74	217.75	121.62	51.44	14.45						
	Additional DS1Loop in DS3 Interoffice Transport Combination - Zone 2		2	UNC1X	USLXX	100.54	217.75	121.62	51.44	14.45						
	Additional DS1Loop in DS3 Interoffice Transport Combination - Zone 3		3	UNC1X	USLXX	178.39	217.75	121.62	51.44	14.45						
	Additoinal DS1 COCI in combination per month			UNC1X	UC1D1	13.76	10.07	7.08	0.00	0.00						
	Nonrecurring Currently Combined Network Elements Switch -As-Is Charge			UNC3X	UNCCC		8.98	8.98	8.98	8.98						
	EXTENDED 2-WIRE VOICE GRADE EXTENDED LOOP/ 2 WIRE VOICE GRADE INTEROFFICE TRANSPORT															
	2-WireVG Loop in combination - Zone 1		1	UNCVX	UEAL2	12.24	127.59	60.54	42.79	2.81						
	2-WireVG Loop in combination - Zone 2		2	UNCVX	UEAL2	17.40	127.59	60.54	42.79	2.81						
	2-WireVG Loop in combination - Zone 3		3	UNCVX	UEAL2	30.87	127.59	60.54	42.79	2.81						

CATEGORY	RATE ELEMENTS	Interim	Zone	BCS	USOC	RATES ($)					Svc Order Submitted Elec per LSR	Svc Order Submitted Manually per LSR	Attachment: 2 Incremental Charge - Manual Svc Order vs. Electronic-1st	Attachment: 2 Incremental Charge - Manual Svc Order vs. Electronic-Add'l	Exhibit: A Incremental Charge - Manual Svc Order vs. Electronic-Disc 1st	Exhibit: A Incremental Charge - Manual Svc Order vs. Electronic-Disc Add'l
						Rec	Nonrecurring		Nonrecurring Disconnect		OSS Rates ($)					
							First	Add'l	First	Add'l	SOMEC	SOMAN	SOMAN	SOMAN	SOMAN	SOMAN
	Interoffice Transport - 2-wire VG - Dedicated- Per Mile Per Month			UNCVX	1L5XX	0.0091										
	Interoffice Transport - 2-wire VG - Dedicated - Facility Termination per month			UNCVX	U1TV2	25.32	94.70	52.59	50.49	21.53						
	Nonrecurring Currently Combined Network Elements Switch -As-Is Charge			UNCVX	UNCCC		8.98	8.98	8.98	8.98						
	EXTENDED 4-WIRE VOICE GRADE EXTENDED LOOP/ 4 WIRE VOICE GRADE INTEROFFICE TRANSPORT															
	4-WireVG Loop in combination - Zone 1		1	UNCVX	UEAL4	18.89	127.59	60.54	42.79	2.81						
	4-WireVG Loop in combination - Zone 2		2	UNCVX	UEAL4	26.84	127.59	60.54	42.79	2.81						
	4-WireVG Loop in combination - Zone 3		3	UNCVX	UEAL4	47.62	127.59	60.54	42.79	2.81						
	Interoffice Transport - 4-wire VG - Dedicated - Per Mile Per Month			UNCVX	1L5XX	0.0091										
	Interoffice Transport - 4-wire VG - Dedicated - Facility Termination per month			UNCVX	U1TV4	22.58	94.70	52.59	50.49	21.53						
	Nonrecurring Currently Combined Network Elements Switch -As-Is Charge			UNCVX	UNCCC		8.98	8.98	8.98	8.98						
	EXTENDED DS3 DIGITAL EXTENDED LOOP WITH DEDICATED DS3 INTEROFFICE TRANSPORT															
	DS3 Local Loop in combination - per mile per month			UNC3X	1L5ND	10.92										
	DS3 Local Loop in combination - Facility Termination per month			UNC3X	UE3PX	386.88	249.97	162.05	67.10	26.82						
	Interoffice Transport - Dedicated - DS3 - Per Mile per month			UNC3X	1L5XX	3.87										
	Interoffice Transport - Dedicated - DS3 combination - Facility Termination per month			UNC3X	U1TF3	1,071.00	314.45	130.88	38.60	18.23						
	Nonrecurring Currently Combined Network Elements Switch -As-Is Charge			UNC3X	UNCCC		8.98	8.98	8.98	8.98						
	EXTENDED STS-1 DIGITAL EXTENDED LOOP WITH DEDICATED STS-1 INTEROFFICE TRANSPORT															
	STS-1 Local Lolp in combination - per mile per month			UNCSX	1L5ND	10.92										
	STS-1 Local Loop in combination - Facility Termination per month			UNCSX	UDLS1	426.60	249.97	162.05	67.10	26.82						
	Interoffice Transport - Dedicated - STS-1 combination - per mile per month			UNCSX	1L5XX	3.87										
	Interoffice Transport - Dedicated - STS-1 combination - Facility Termination per month			UNCSX	U1TFS	1,056.00	314.45	130.88	38.60	18.23						
	Nonrecurring Currently Combined Network Elements Switch -As-Is Charge			UNCSX	UNCCC		8.98	8.98	8.98	8.98						
	EXTENDED 2-WIRE ISDN EXTENDED LOOP WITH DS1 INTEROFFICE TRANSPORT															
	First 2-Wire ISDN Loop in Combination - Zone 1		1	UNCNX	U1L2X	19.28	127.59	60.60	42.79	2.81						
	First 2-Wire ISDN Loop in Combination - Zone 2		2	UNCNX	U1L2X	27.40	127.59	60.60	42.79	2.81						
	First 2-Wire ISDN Loop in Combination - Zone 3		3	UNCNX	U1L2X	48.62	127.59	60.60	42.79	2.81						
	Interoffice Transport - Dedicated - DS1 combination - per mile per month			UNC1X	1L5XX	0.1856										
	Interoffice Transport - Dedicated - DS1 combination - Facility Termination per month			UNC1X	U1TF1	88.44	174.46	122.46	45.61	17.95						
	1/0 Channel System in combination - per month			UNC1X	MQ1	146.77	101.42	71.62								
	2-wire ISDN COCI (BRITE) - in combination - per month			UNCNX	UC1CA	3.66	10.07	7.08	0.00	0.00						
	Additional 2-wire ISDN Loop in same DS1Interoffice Transport Combination - Zone 1		1	UNCNX	U1L2X	19.28	127.59	60.60	42.79	2.81						
	Additional 2-wire ISDN Loop in same DS1Interoffice Transport Combination - Zone 2		2	UNCNX	U1L2X	27.40	127.59	60.60	42.79	2.81						
	Additional 2-wire ISDN Loop in same DS1Interoffice Transport Combination - Zone 3		3	UNCNX	U1L2X	48.62	127.59	60.60	42.79	2.81						
	Additional 2-wire ISDN COCI (BRITE) - in combination- per month			UNCNX	UC1CA	3.66	10.07	7.08	0.00	0.00						
	Nonrecurring Currently Combined Network Elements Switch -As-Is Charge			UNC1X	UNCCC		8.98	8.98	8.98	8.98						
	EXTENDED 4-WIRE DS1 DIGITAL EXTENDED LOOP WITH DEDICATED STS-1 INTEROFFICE TRANSPORT															
	First DS1 Loop Combination - Zone 1		1	UNC1X	USLXX	70.74	217.75	121.62	51.44	14.45						
	First DS1 Loop Combination - Zone 2		2	UNC1X	USLXX	100.54	217.75	121.62	51.44	14.45						
	First DS1 Loop Combination - Zone 3		3	UNC1X	USLXX	178.39	217.75	121.62	51.44	14.45						

CATEGORY	RATE ELEMENTS	Interim	Zone	BCS	USOC	RATES ($)					Svc Order Submitted Elec per LSR	Svc Order Submitted Manually per LSR	Attachment: 2 Incremental Charge - Manual Svc Order vs. Electronic-1st	Attachment: 2 Incremental Charge - Manual Svc Order vs. Electronic-Add'l	Exhibit: A Incremental Charge - Manual Svc Order vs. Electronic-Disc 1st	Exhibit: A Incremental Charge - Manual Svc Order vs. Electronic-Disc Add'l
						Rec	Nonrecurring		Nonrecurring Disconnect		OSS Rates ($)					
							First	Add'l	First	Add'l	SOMEC	SOMAN	SOMAN	SOMAN	SOMAN	SOMAN
	Interoffice Transport - Dedicated - STS-1 combination - Per Mile Per Month			UNCSX	1L5XX	3.87										
	Interoffice Transport - Dedicated - STS-1 combination - Facility Termination per month			UNCSX	U1TFS	1,056.00	314.45	130.88	38.60	18.23						
	3/1 Channel System in combination per month			UNCSX	MQ3	211.19	199.28	118.64	40.34	39.07						
	DS1 COCI in combination per month			UNC1X	UC1D1	13.76	10.07	7.08	0.00	0.00						
	Additional DS1Loop in the same STS-1 Interoffice Transport Combination - Zone 1		1	UNC1X	USLXX	70.74	217.75	121.62	51.44	14.45						
	Additional DS1Loop in the same STS-1 Interoffice Transport Combination - Zone 2		2	UNC1X	USLXX	100.54	217.75	121.62	51.44	14.45						
	Additional DS1Loop in the same STS-1 Interoffice Transport Combination - Zone 3		3	UNC1X	USLXX	178.39	217.75	121.62	51.44	14.45						
	DS1 COCI in combination per month			UNC1X	UC1D1	13.76	10.07	7.08	0.00	0.00						
	Nonrecurring Currently Combined Network Elements Switch -As-Is Charge			UNCSX	UNCCC		8.98	8.98	8.98	8.98						
	EXTENDED 4-WIRE 56 KBPS DIGITAL EXTENDED LOOP WITH 56 KBPS INTEROFFICE TRANSPORT															
	4-wire 56 kbps Local Loop in combination - Zone 1		1	UNCDX	UDL56	22.20	127.59	60.54	42.79	2.81						
	4-wire 56 kbps Local Loop in combination - Zone 2		2	UNCDX	UDL56	31.56	127.59	60.54	42.79	2.81						
	4-wire 56 kbps Local Loop in combination - Zone 3		3	UNCDX	UDL56	55.99	127.59	60.54	42.79	2.81						
	Interoffice Transport - Dedicated - 4-wire 56 kbps combination - Per Mile per month			UNCDX	1L5XX	0.0091										
	Interoffice Transport - Dedicated - 4-wire 56 kbps combination - Facility Termination per month			UNCDX	U1TD5	18.44	94.70	52.59	50.49	21.53						
	Nonrecurring Currently Combined Network Elements Switch -As-Is Charge			UNCDX	UNCCC		8.98	8.98	8.98	8.98						
	EXTENDED 4-WIRE 64 KBPS DIGITAL EXTENDED LOOP WITH 64 KBPS INTEROFFICE TRANSPORT															
	4-wire 64 kbps Lcoal Loop in Combination - Zone 1		1	UNCDX	UDL64	22.20	127.59	60.54	42.79	2.81						
	4-wire 64 kbps Lcoal Loop in Combination - Zone 2		2	UNCDX	UDL64	31.56	127.59	60.54	42.79	2.81						
	4-wire 64 kbps Lcoal Loop in Combination - Zone 3		3	UNCDX	UDL64	55.99	127.59	60.54	42.79	2.81						
	Interoffice Transport - Dedicated - 4-wire 64 kbps combination - Per Mile per month			UNCDX	1L5XX	0.0091										
	Interoffice Transport - Dedicated - 4-wire 64 kbps combination - Facility Termination per month			UNCDX	U1TD6	18.44	94.70	52.59	50.49	21.53						
	Nonrecurring Currently Combined Network Elements Switch -As-Is Charge			UNCDX	UNCCC		8.98	8.98	8.98	8.98						
	EXTENDED 2-WIRE VOICE GRADE LOOP WITH DS1 INTEROFFICE TRANSPORT w/ 3/1 MUX															
	First 2-wire VG Loop (SL2) in Combination - Zone 1		1	UNCVX	UEAL2	12.24	127.59	60.54	42.79	2.81						
	First 2-wire VG Loop (SL2) in Combination - Zone 2		2	UNCVX	UEAL2	17.40	127.59	60.54	42.79	2.81						
	First 2-wire VG Loop (SL2) in Combination - Zone 3		3	UNCVX	UEAL2	30.87	127.59	60.54	42.79	2.81						
	First Interoffice Transport - Dedicated - DS1 combination - Per Mile			UNC1X	1L5XX	0.1856										
	First Interoffice Transport - Dedicated - DS1 combination - Facility Termination per month			UNC1X	U1TF1	88.44	174.46	122.46	45.61	17.95						
	Per each DS1 Channelization System Per Month			UNC1X	MQ1	146.77	101.42	71.62								
	Per each Voice Grade COCI - Per Month per month			UNCVX	1D1VG	1.38	10.07	7.08	0.00	0.00						
	3/1 Channel System in combination per month			UNC3X	MQ3	211.19	199.28	118.64	40.34	39.07						
	Per each DS1 COCI in combination per month			UNC1X	UC1D1	13.76	10.07	7.08	0.00	0.00						
	Each Additional 2-Wire VG Loop(SL 2) in the same DS1 Interoffice Transport Combination - Zone 1		1	UNCVX	UEAL2	12.24	127.59	60.54	42.79	2.81						
	Each Additional 2-Wire VG Loop(SL2) in the same DS1 Interoffice Transport Combination - Zone 2		2	UNCVX	UEAL2	17.40	127.59	60.54	42.79	2.81						
	Each Additional 2-Wire VG Loop(SL2) in the same DS1 Interoffice Transport Combination - Zone 3		3	UNCVX	UEAL2	30.87	127.59	60.54	42.79	2.81						
	Each Additional Voice Grade COCI in combination - per month			UNCVX	1D1VG	1.38	10.07	7.08	0.00	0.00						
	Each Additional DS1 Interoffice Channel per mile in same 3/1 Channel System per month			UNC1X	1L5XX	0.1856										
	Each Additional DS1 Interoffice Channel Facility Termination in same 3/1 Channel System per month			UNC1X	U1TF1	88.44	174.46	122.46	45.61	17.95						
	Each Additional DS1 COCI combination per month			UNC1X	UC1D1	13.76	10.07	7.08	0.00	0.00						

UNBUNDLED NETWORK ELEMENTS - Florida														Attachment: 2		Exhibit: A	
CATEGORY		RATE ELEMENTS	Interim	Zone	BCS	USOC	RATES ($)					Svc Order Submitted Elec per LSR	Svc Order Submitted Manually per LSR	Incremental Charge - Manual Svc Order vs. Electronic-1st	Incremental Charge - Manual Svc Order vs. Electronic-Add'l	Incremental Charge - Manual Svc Order vs. Electronic-Disc 1st	Incremental Charge - Manual Svc Order vs. Electronic-Disc Add'l
							Rec	Nonrecurring		Nonrecurring Disconnect		OSS Rates ($)					
								First	Add'l	First	Add'l	SOMEC	SOMAN	SOMAN	SOMAN	SOMAN	SOMAN
		Nonrecurring Currently Combined Network Elements Switch -As-Is Charge			UNC1X	UNCCC		8.98	8.98	8.98	8.98						
	EXTENDED 4-WIRE VOICE GRADE LOOP WITH DEDICATED DS1 INTEROFFICE TRANSPORT w/ 3/1 MUX																
		First 4-Wire Analog Voice Grade Local Loop in Combination - Zone 1		1	UNCVX	UEAL4	18.89	127.59	60.54	42.79	2.81						
		First 4-Wire Analog Voice Grade Local Loop in Combination - Zone 2		2	UNCVX	UEAL4	26.84	127.59	60.54	42.79	2.81						
		First 4-Wire Analog Voice Grade Local Loop in Combination - Zone 3		3	UNCVX	UEAL4	47.62	127.59	60.54	42.79	2.81						
		First Interoffice Transport - Dedicated - DS1 combination - Per Mile Per Month			UNC1X	1L5XX	0.1856										
		First Interoffice Transport - Dedicated - DS1 - Facility Termination Per Month			UNC1X	U1TF1	88.44	174.46	122.46	45.61	17.95						
		Per each 1/0 Channel System in combination Per Month			UNC1X	MQ1	146.77	101.42	71.62								
		Per each Voice Grade COCI in combination - per month			UNCVX	1D1VG	1.38	10.07	7.08	0.00	0.00						
		3/1 Channel System in combination per month			UNC3X	MQ3	211.19	199.28	118.64	40.34	39.07						
		Per each DS1 COCI in combination per month			UNC1X	UC1D1	13.76	10.07	7.08	0.00	0.00						
		Additional 4-Wire Analog Voice Grade Loop in same DS1 Interoffice Transport Combination - Zone 1		1	UNCVX	UEAL4	18.89	127.59	60.54	42.79	2.81						
		Additional 4-Wire Analog Voice Grade Loop in same DS1 Interoffice Transport Combination - Zone 2		2	UNCVX	UEAL4	26.84	127.59	60.54	42.79	2.81						
		Additional 4-Wire Analog Voice Grade Loop in same DS1 Interoffice Transport Combination - Zone 3		3	UNCVX	UEAL4	47.62	127.59	60.54	42.79	2.81						
		Each Additional DS1 Interoffice Channel per mile in same 3/1 Channel System per month			UNC1X	1L5XX	0.1856										
		Each Additional DS1 Interoffice Channel Facility Termination in same 3/1 Channel System per month			UNC1X	U1TF1	88.44	174.46	122.46	45.61	17.95						
		Additional Voice Grade COCI - in combination - per month			UNCVX	1D1VG	1.38	10.07	7.08	0.00	0.00						
		Nonrecurring Currently Combined Network Elements Switch -As-Is Charge			UNC1X	UNCCC		8.98	8.98	8.98	8.98						
	EXTENDED 4-WIRE 56 KBPS DIGITAL LOOP WITH DEDICATED DS1 INTEROFFICE TRANSPORT w/ 3/1 MUX																
		First 4-Wire 56Kbps Digital Grade Local Loop in Combination - Zone 1		1	UNCDX	UDL56	22.20	127.59	60.54	42.79	2.81						
		First 4-Wire 56Kbps Digital Grade Local Loop in Combination - Zone 2		2	UNCDX	UDL56	31.56	127.59	60.54	42.79	2.81						
		First 4-Wire 56Kbps Digital Grade Local Loop in Combination - Zone 3		3	UNCDX	UDL56	55.99	127.59	60.54	42.79	2.81						
		First Interoffice Transport - Dedicated - DS1 combination - Per Mile Per Month			UNC1X	1L5XX	0.1856										
		First Interoffice Transport - Dedicated - DS1 - combination Facility Termination Per Month			UNC1X	U1TF1	88.44	174.46	122.46	45.61	17.95						
		Per each 1/0 Channel System in combination Per Month			UNC1X	MQ1	146.77	101.42	71.62								
		Per each OCU-DP COCI (data) COCI per month (2.4-64kbs)			UNCDX	1D1DD	2.10	10.07	7.08	0.00	0.00						
		3/1 Channel System in combination per month			UNC3X	MQ3	211.19	199.28	118.64	40.34	39.07						
		Per each DS1 COCI in combination per month			UNC1X	UC1D1	13.76	10.07	7.08	0.00	0.00						
		Additional 4-Wire 56Kbps Digital Grade Loop in same DS1 Interoffice Transport Combination - Zone 1		1	UNCDX	UDL56	22.20	127.59	60.54	42.79	2.81						
		Additional 4-Wire 56Kbps Digital Grade Loop in same DS1 Interoffice Transport Combination - Zone 2		2	UNCDX	UDL56	31.56	127.59	60.54	42.79	2.81						
		Additional 4-Wire 56Kbps Digital Grade Loop in same DS1 Interoffice Transport Combination - Zone 3		3	UNCDX	UDL56	55.99	127.59	60.54	42.79	2.81						
		OCU-DP COCI (data) COCI in combination per month (2.4-64kbs)			UNCDX	1D1DD	2.10	10.07	7.08	0.00	0.00						
		Each Additional DS1 Interoffice Channel per mile in same 3/1 Channel System per month			UNC1X	1L5XX	0.1856										
		Each Additional DS1 Interoffice Channel Facility Termination in same 3/1 Channel System per month			UNC1X	U1TF1	88.44	174.46	122.46	45.61	17.95						
		Each Additional DS1 COCI in the same 3/1 channel system combination per month			UNC1X	UC1D1	13.76	10.07	7.08	0.00	0.00						

CATEGORY	RATE ELEMENTS	Interim	Zone	BCS	USOC	RATES ($)					Svc Order Submitted Elec per LSR	Svc Order Submitted Manually per LSR	Attachment: 2 Incremental Charge - Manual Svc Order vs. Electronic-1st	Attachment: 2 Incremental Charge - Manual Svc Order vs. Electronic-Add'l	Exhibit: A Incremental Charge - Manual Svc Order vs. Electronic-Disc 1st	Exhibit: A Incremental Charge - Manual Svc Order vs. Electronic-Disc Add'l
						Rec	Nonrecurring		Nonrecurring Disconnect		OSS Rates ($)					
							First	Add'l	First	Add'l	SOMEC	SOMAN	SOMAN	SOMAN	SOMAN	SOMAN
	Nonrecurring Currently Combined Network Elements Switch -As-Is Charge			UNC1X	UNCCC		8.98	8.98	8.98	8.98						
	EXTENDED 4-WIRE 64 KBPS DIGITAL LOOP WITH DEDICATED DS1 INTEROFFICE TRANSPORT w/ 3/1 MUX															
	First 4-Wire 64Kbps Digital Grade Loop in a DS1 Interoffice Transport Combination - Zone 1		1	UNCDX	UDL64	22.20	127.59	60.54	42.79	2.81						
	First 4-Wire 64Kbps Digital Grade Loop in a DS1 Interoffice Transport Combination - Zone 2		2	UNCDX	UDL64	31.56	127.59	60.54	42.79	2.81						
	First 4-Wire 64Kbps Digital Grade Loop in a DS1 Interoffice Transport Combination - Zone 3		3	UNCDX	UDL64	55.99	127.59	60.54	42.79	2.81						
	First Interoffice Transport - Dedicated - DS1 combination - Per Mile Per Month			UNC1X	1L5XX	0.1856										
	First Interoffice Transport - Dedicated - DS1 combination - Facility Termination Per Month			UNC1X	U1TF1	88.44	174.46	122.46	45.61	17.95						
	Per each Channel System 1/0 in combination Per Month			UNC1X	MQ1	146.77	101.42	71.62								
	Per each OCU-DP COCI (data) in combination - per month (2.4-64kbs)			UNCDX	1D1DD	2.10	10.07	7.08	0.00	0.00						
	3/1 Channel System in combination per month			UNC3X	MQ3	211.19	199.28	118.64	40.34	39.07						
	Per each DS1 COCI in combination per month			UNC1X	UC1D1	13.76	10.07	7.08	0.00	0.00						
	Additional 4-Wire 64Kbps Digital Grade Loop in same DS1 Interoffice Transport Combination - Zone 1		1	UNCDX	UDL64	22.20	127.59	60.54	42.79	2.81						
	Additional 4-Wire 64Kbps Digital Grade Loop in same DS1 Interoffice Transport Combination - Zone 2		2	UNCDX	UDL64	31.56	127.59	60.54	42.79	2.81						
	Additional 4-Wire 64Kbps Digital Grade Loop in same DS1 Interoffice Transport Combination - Zone 3		3	UNCDX	UDL64	55.99	127.59	60.54	42.79	2.81						
	Additional OCU-DP COCI (data) - DS1 to DS0 Channel System combination - per month (2.4-64kbs)			UNCDX	1D1DD	2.10	10.07	7.08	0.00	0.00						
	Each Additional DS1 Interoffice Channel per mile in same 3/1 Channel System per month			UNC1X	1L5XX	0.1856										
	Each Additional DS1 Interoffice Channel Facility Termination in same 3/1 Channel System per month			UNC1X	U1TF1	88.44	174.46	122.46	45.61	17.95						
	Each Additional DS1 COCI in the same 3/1 channel system combination per month			UNC1X	UC1D1	13.76	10.07	7.08	0.00	0.00						
	Nonrecurring Currently Combined Network Elements Switch -As-Is Charge			UNC1X	UNCCC		8.98	8.98	8.98	8.98						
	EXTENDED 2-WIRE ISDN LOOP WITH DS1 INTEROFFICE TRANSPORT w/ 3/1 MUX															
	First 2-Wire ISDN Loop in a DS1 Interoffice Combination Transport - Zone 1		1	UNCNX	U1L2X	19.28	127.59	60.60	42.79	2.81						
	First 2-Wire ISDN Loop in a DS1 Interoffice Combination Transport - Zone 2		2	UNCNX	U1L2X	27.40	127.59	60.60	42.79	2.81						
	First 2-Wire ISDN Loop in a DS1 Interoffice Combination Transport - Zone 3		3	UNCNX	U1L2X	48.62	127.59	60.60	42.79	2.81						
	First Interoffice Transport - Dedicated - DS1 combination - Per Mile per month			UNC1X	1L5XX	0.1856										
	First Interoffice Transport - Dedicated - DS1 combination - Facility Termination per month			UNC1X	U1TF1	88.44	174.46	122.46	45.61	17.95						
	Per each Channel System 1/0 in combination - per month			UNC1X	MQ1	146.77	101.42	71.62								
	Per each 2-wire ISDN COCI (BRITE) in combination - per month			UNCNX	UC1CA	3.66	10.07	7.08	0.00	0.00						
	3/1 Channel System in combination per month			UNC3X	MQ3	211.19	199.28	118.64	40.34	39.07						
	Per each DS1 COCI in combination per month			UNC1X	UC1D1	13.76	10.07	7.08	0.00	0.00						
	Additional 2-wire ISDN Loop in same DS1Interoffice Transport Combination - Zone 1		1	UNCNX	U1L2X	19.28	127.59	60.60	42.79	2.81						
	Additional 2-wire ISDN Loop in same DS1Interoffice Transport Combination - Zone 2		2	UNCNX	U1L2X	27.40	127.59	60.60	42.79	2.81						
	Additional 2-wire ISDN Loop in same DS1Interoffice Transport Combination - Zone 3		3	UNCNX	U1L2X	48.62	127.59	60.60	42.79	2.81						
	Additional 2-wire ISDN COCI (BRITE) in same 1/0 channel system combination- per month			UNCNX	UC1CA	3.66	10.07	7.08	0.00	0.00						

UNBUNDLED NETWORK ELEMENTS - Florida														Attachment: 2		Exhibit: A	
CATEGORY		RATE ELEMENTS	Interim	Zone	BCS	USOC	RATES ($)					Svc Order Submitted Elec per LSR	Svc Order Submitted Manually per LSR	Incremental Charge - Manual Svc Order vs. Electronic-1st	Incremental Charge - Manual Svc Order vs. Electronic-Add'l	Incremental Charge - Manual Svc Order vs. Electronic-Disc 1st	Incremental Charge - Manual Svc Order vs. Electronic-Disc Add'l
							Rec	Nonrecurring		Nonrecurring Disconnect		OSS Rates ($)					
								First	Add'l	First	Add'l	SOMEC	SOMAN	SOMAN	SOMAN	SOMAN	SOMAN
		Each Additional DS1 Interoffice Channel per mile in same 3/1 Channel System per month			UNC1X	1L5XX	0.1856										
		Each Additional DS1 Interoffice Channel Facility Termination in same 3/1 Channel System per month			UNC1X	U1TF1	88.44	174.46	122.46	45.61	17.95						
		Each Additional DS1 COCI in the same 3/1 channel system combination per month			UNC1X	UC1D1	13.76	10.07	7.08	0.00	0.00						
		Nonrecurring Currently Combined Network Elements Switch -As-Is Charge			UNC1X	UNCCC		8.98	8.98	8.98	8.98						
	EXTENDED 4-WIRE DS1 LOOP WITH DEDICATED DS1 INTEROFFICE TRANSPORT w/ 3/1 MUX																
		First 4-wire DS1 Digital Lcoal Loop in Combination - Zone 1		1	UNC1X	USLXX	70.74	217.75	121.62	51.44	14.45						
		First 4-wire DS1 Digital Lcoal Loop in Combination - Zone 2		2	UNC1X	USLXX	100.54	217.75	121.62	51.44	14.45						
		First 4-wire DS1 Digital Lcoal Loop in Combination - Zone 3		3	UNC1X	USLXX	178.39	217.75	121.62	51.44	14.45						
		First Interoffice Transport - Dedicated - DS1 combination - Per Mile Per Month			UNC1X	1L5XX	0.1856										
		First Interoffice Transport - Dedicated - DS1 combination - Facility Termination Per Month			UNC1X	U1TF1	88.44	174.46	122.46	45.61	17.95						
		3/1 Channel System in combination per month			UNC3X	MQ3	211.19	199.28	118.64	40.34	39.07						
		Per each DS1 COCI combination per month			UNC1X	UC1D1	13.76	10.07	7.08	0.00	0.00						
		Each Additional DS1 Interoffice Channel per mile in same 3/1 Channel System per month			UNC1X	1L5XX	0.1856										
		Each Additional DS1 Interoffice Channel Facility Termination in same 3/1 Channel System per month			UNC1X	U1TF1	88.44	174.46	122.46	45.61	17.95						
		Each Additional DS1 COCI in the same 3/1 channel system combination per month			UNC1X	UC1D1	13.76	10.07	7.08	0.00	0.00						
		Additional 4-Wire DS1 Digital Local Loop in Combination - Zone 1		1	UNC1X	USLXX	70.74	217.75	121.62	51.44	14.45						
		Additional 4-Wire DS1 Digital Local Loop in Combination - Zone 2		2	UNC1X	USLXX	100.54	217.75	121.62	51.44	14.45						
		Additional 4-Wire DS1 Digital Local Loop in Combination - Zone 3		3	UNC1X	USLXX	178.39	217.75	121.62	51.44	14.45						
		Nonrecurring Currently Combined Network Elements Switch -As-Is Charge			UNC1X	UNCCC		8.98	8.98	8.98	8.98						
	EXTENDED 4-WIRE 56 KBPS DIGITAL EXTENDED LOOP WITH DS0 INTEROFFICE TRANSPORT																
		First 4-wire 56 kbps Local Loop in combination - Zone 1		1	UNCDX	UDL56	22.20	127.59	60.54	42.79	2.81						
		First 4-wire 56 kbps Local Loop in combination - Zone 2		2	UNCDX	UDL56	31.56	127.59	60.54	42.79	2.81						
		First 4-wire 56 kbps Local Loop in combination - Zone 3		3	UNCDX	UDL56	55.99	127.59	60.54	42.79	2.81						
		First 4-wiree 56 kbps Interoffice Transport - Dedicated - Per Mile per month			UNCDX	1L5XX	0.0091										
		First 4-wire 56 kbps Interoffice Transport - Dedicated - Facility Termination per month			UNCDX	U1TD5	18.44	94.70	52.59	50.49	21.53						
		Nonrecurring Currently Combined Network Elements Switch -As-Is Charge			UNCDX	UNCCC		8.98	8.98	8.98	8.98						
	EXTENDED 4-WIRE 64 KBPS DIGITAL EXTENDED LOOP WITH DS0 INTEROFFICE TRANSPORT																
		First 4-wire 64 kbps Local Loop in combination - Zone 1		1	UNCDX	UDL64	22.20	127.59	60.54	42.79	2.81						
		First 4-wire 64 kbps Local Loop in combination - Zone 2		2	UNCDX	UDL64	31.56	127.59	60.54	42.79	2.81						
		First 4-wire 64 kbps Local Loop in combination - Zone 3		3	UNCDX	UDL64	55.99	127.59	60.54	42.79	2.81						
		First I4-wire 65 kbps Interoffice Transport - Dedicated - Per Mile per month			UNCDX	1L5XX	0.0091										
		First 4-wire 64 kbps Interoffice Transport - Dedicated - Facility Termination per month			UNCDX	U1TD6	18.44	94.70	52.59	50.49	21.53						
		Nonrecurring Currently Combined Network Elements Switch -As-Is Charge			UNCDX	UNCCC		8.98	8.98	8.98	8.98						
ADDITIONAL NETWORK ELEMENTS																	
	When used as a part of a currently combined facility, the non-recurrng charges do not apply, but a Switch As Is charge does apply.																
	When used as ordinarily combined network elements in All States, the non-recurring charges apply and the Switch As Is Charge does not.																
	Nonrecurring Currently Combined Network Elements "Switch As Is" Charge (One applies to each combination)																
		Nonrecurring Currently Combined Network Elements Switch -As-Is Charge - 2 wire/4-Wire VG			UNCVX	UNCCC		8.98	8.98	8.98	8.98						

UNBUNDLED NETWORK ELEMENTS - Florida														Attachment: 2		Exhibit: A	
CATEGORY		RATE ELEMENTS	Interim	Zone	BCS	USOC	RATES ($)					Svc Order Submitted Elec per LSR	Svc Order Submitted Manually per LSR	Incremental Charge - Manual Svc Order vs. Electronic-1st	Incremental Charge - Manual Svc Order vs. Electronic-Add'l	Incremental Charge - Manual Svc Order vs. Electronic-Disc 1st	Incremental Charge - Manual Svc Order vs. Electronic-Disc Add'l
							Rec	Nonrecurring		Nonrecurring Disconnect		OSS Rates ($)					
								First	Add'l	First	Add'l	SOMEC	SOMAN	SOMAN	SOMAN	SOMAN	SOMAN
		Nonrecurring Currently Combined Network Elements Switch -As-Is Charge - 56/64 kbps			UNCDX	UNCCC		8.98	8.98	8.98	8.98						
		Nonrecurring Currently Combined Network Elements Switch -As-Is Charge - DS1			UNC1X	UNCCC		8.98	8.98	8.98	8.98						
		Nonrecurring Currently Combined Network Elements Switch -As-Is Charge - DS3			UNC3X	UNCCC		8.98	8.98	8.98	8.98						
		Nonrecurring Currently Combined Network Elements Switch -As-Is Charge - STS1			UNCSX	UNCCC		8.98	8.98	8.98	8.98						
	Optional Features & Functions:																
		Clear Channel Capability Extended Frame Option - per DS1	I		U1TD1, ULDD1,UNC1X	CCOEF		0I	0I	0I	0I						
		Clear Channel Capability Super FrameOption - per DS1	I		U1TD1, ULDD1,UNC1X	CCOSF		0I	0I	0I	0I						
		Clear Channel Capability (SF/ESF) Option - Subsequent Activity - per DS1	I		ULDD1, U1TD1, UNC1X, USL	NRCCC		184.92S	23.82S	2.07S	0.8S						
		C-bit Parity Option - Subsequent Activity - per DS3	i		U1TD3, ULDD3, UE3, UNC3X	NRCC3		219.09S	7.67S	0.773S	0S						
	MULTIPLEXERS																
		DS1 to DS0 Channel System per month			UNC1X	MQ1	146.77	101.42	71.62								
		OCU-DP COCI (data) - DS1 to DS0 Channel System - per month (2.4-64kbs) used for a Local Loop			UDL	1D1DD	2.10	10.07	7.08								
		OCU-DP COCI (data) - DS1 to DS0 Channel System - per month (2.4-64kbs) used for connection to a channelized DS1 Local Channel in the same SWC as collocation			U1TUD	1D1DD	2.10	10.07	7.08	0.00	0.00						
		2-wire ISDN COCI (BRITE) - DS1 to DS0 Channel Systsem - per month for a Local Loop			UDN	UC1CA	3.66	10.07	7.08								
		2-wire ISDN COCI (BRITE) - DS1 to DS0 Channel Systsem - per month used for connection to a channelized DS1 Local Channel in the same SWC as collocation			U1TUB	UC1CA	3.66	10.07	7.08	0.00	0.00						
		Voice Grade COCI - DS1 to DS0 Channel System - per month used for a Local Loop			UEA	1D1VG	1.38	10.07	7.08								
		Voice Grade COCI - DS1 to DS0 Channel System - per month used for connection to a channelized DS1 Local Channel in the same SWC as collocation			U1TUC	1D1VG	1.38	10.07	7.08	0.00	0.00						
		DS3 to DS1 Channel System per month			UNC3X	MQ3	211.19	199.28	118.64	40.34	39.07						
		STS-1 to DS1 Channel System per month			UNXCS	MQ3	211.19	199.28	118.64	40.34	39.07						
		DS1 COCI used with Loop per month			USL	UC1D1	13.76	10.07	7.08								
		DS1 COCI (used for connection to a channelized DS1 Local Channel in the same SWC as collocation) per month			U1TUA	UC1D1	13.76	10.07	7.08	0.00	0.00						
		DS1 COCI used with Interoffice Channel per month			U1TD1	UC1D1	13.76	10.07	7.08	0.00	0.00						
		DS3 Interface Unit (DS1 COCI) used with Local Channel per month			ULDD1	UC1D1	13.76	10.07	7.08	0.00	0.00						
UNBUNDLED LOCAL EXCHANGE SWITCHING(PORTS)																	
	Exchange Ports																
	NOTE: Although the Port Rate includes all available features in GA, KY, LA & TN, the desired features will need to be ordered using retail USOCs																
	2-WIRE VOICE GRADE LINE PORT RATES (RES)																
		Exchange Ports - 2-Wire Analog Line Port- Res.			UEPSR	UEPRL	1.40	3.74	3.63	1.88	1.80						
		Exchange Ports - 2-Wire Analog Line Port with Caller ID - Res.			UEPSR	UEPRC	1.40	3.74	3.63	1.88	1.80						
		Exchange Ports - 2-Wire Analog Line Port outgoing only - Res.			UEPSR	UEPRO	1.40	3.74	3.63	1.88	1.80						
		Exchange Ports - 2-Wire VG unbundled Florida area calling with Caller ID - Res.			UEPSR	UEPAF	1.40	3.74	3.63	1.88	1.80						
		Exchange Ports - 2-Wire VG unbundled Florida Residence Area Calling Plan, without Caller ID capability			UEPSR	UEPA9	1.40	3.74	3.63	1.88	1.80						
		Exchange Ports - 2-Wire VG unbundled Florida extended dialing port for use with CREX7 and Caller ID			UEPSR	UEPA1	1.40	3.74	3.63	1.88	1.80						
		Exchange Ports - 2-Wire VG unbundled Florida extended dialing port for use with CREX7, without Caller ID capability			UEPSR	UEPA8	1.40	3.74	3.63	1.88	1.80						

UNBUNDLED NETWORK ELEMENTS - Florida														Attachment: 2		Exhibit: A	
CATEGORY		RATE ELEMENTS	Interim	Zone	BCS	USOC	RATES ($)					Svc Order Submitted Elec per LSR	Svc Order Submitted Manually per LSR	Incremental Charge - Manual Svc Order vs. Electronic-1st	Incremental Charge - Manual Svc Order vs. Electronic-Add'l	Incremental Charge - Manual Svc Order vs. Electronic-Disc 1st	Incremental Charge - Manual Svc Order vs. Electronic-Disc Add'l
							Rec	Nonrecurring		Nonrecurring Disconnect		OSS Rates ($)					
								First	Add'l	First	Add'l	SOMEC	SOMAN	SOMAN	SOMAN	SOMAN	SOMAN
		Exchange Ports - 2-Wire VG unbundled res, low usage line port with Caller ID (LUM)			UEPSR	UEPAP	1.40	3.74	3.63	1.88	1.80						
		2-Wire voice unbundled Low Usage Line Port without Caller ID Capability			UEPSR	UEPRT	1.40	3.74	3.63	1.88	1.80						
		Subsequent Activity			UEPSR	USASC	0.00	0.00	0.00								
	FEATURES																
		All Available Vertical Features			UEPSR	UEPVF	2.26	0.00	0.00								
	2-WIRE VOICE GRADE LINE PORT RATES (BUS)																
		Exchange Ports - 2-Wire Analog Line Port without Caller ID - Bus			UEPSB	UEPBL	1.40	3.74	3.63	1.88	1.80						
		Exchange Ports - 2-Wire VG unbundled Line Port with unbundled port with Caller+E484 ID - Bus.			UEPSB	UEPBC	1.40	3.74	3.63	1.88	1.80						
		Exchange Ports - 2-Wire Analog Line Port outgoing only - Bus.			UEPSB	UEPBO	1.40	3.74	3.63	1.88	1.80						
		Exhange Ports - 2-Wire VG unbundled incoming only port with Caller ID - Bus			UEPSB	UEPB1	1.40	3.74	3.63	1.88	1.80						
		2-Wire voice unbundled Incoming Only Port without Caller ID Capability			UEPSB	UEPBE	1.40	3.74	3.63	1.88	1.80						
		Subsequent Activity			UEPSB	USASC	0.00	0.00	0.00								
	FEATURES																
		All Available Vertical Features			UEPSB	UEPVF	2.26	0.00	0.00								
	EXCHANGE PORT RATES (DID & PBX)																
		2-Wire VG Unbundled 2-Way PBX Trunk - Res			UEPSE	UEPRD	1.40	39.06	18.18	12.35	0.7187						
		2-Wire VG Line Side Unbundled 2-Way PBX Trunk - Bus			UEPSP	UEPPC	1.40	39.06	18.18	12.35	0.7187						
		2-Wire VG Line Side Unbundled Outward PBX Trunk - Bus			UEPSP	UEPPO	1.40	39.06	18.18	12.35	0.7187						
		2-Wire VG Line Side Unbundled Incoming PBX Trunk - Bus			UEPSP	UEPP1	1.40	39.06	18.18	12.35	0.7187						
		2-Wire Analog Long Distance Terminal PBX Trunk - Bus			UEPSP	UEPLD	1.40	39.06	18.18	12.35	0.7187						
		2-Wire Voice Unbundled PBX LD Terminal Ports			UEPSP	UEPLD	1.40	39.06	18.18	12.35	0.7187						
		2-Wire Vice Unbundled 2-Way PBX Usage Port			UEPSP	UEPXA	1.40	39.06	18.18	12.35	0.7187						
		2-Wire Voice Unbundled PBX Toll Terminal Hotel Ports			UEPSP	UEPXB	1.40	39.06	18.18	12.35	0.7187						
		2-Wire Voice Unbundled PBX LD DDD Terminals Port			UEPSP	UEPXC	1.40	39.06	18.18	12.35	0.7187						
		2-Wire Voice Unbundled PBX LD Terminal Switchboard Port			UEPSP	UEPXD	1.40	39.06	18.18	12.35	0.7187						
		2-Wire Voice Unbundled PBX LD Terminal Switchboard IDD Capable Port			UEPSP	UEPXE	1.40	39.06	18.18	12.35	0.7187						
		2-Wire Voice Unbundled 2-Way PBX Hotel/Hospital Economy Administrative Calling Port			UEPSP	UEPXL	1.40	39.06	18.18	12.35	0.7187						
		2-Wire Voice Unbundled 2-Way PBX Hotel/Hospital Economy Room Calling Port			UEPSP	UEPXM	1.40	39.06	18.18	12.35	0.7187						
		2-Wire Voice Unbundled 1-Way Outgoing PBX Hotel/Hospital Discount Room Calling Port			UEPSP	UEPXO	1.40	39.06	18.18	12.35	0.7187						
		2-Wire Voice Unbundled 1-Way Outgoing PBX Measured Port			UEPSP	UEPXS	1.40	39.06	18.18	12.35	0.7187						
		Subsequent Activity			UEPSP	USASC	0.00	0.00	0.00								
	FEATURES																
		All Available Vertical Features			UEPSP UEPSE	UEPVF	2.26	0.00	0.00								
	EXCHANGE PORT RATES (COIN)																
		Exchange Ports - Coin Port					1.40	3.74	3.63	1.88	1.80						
	NOTE: Transmission/usage charges associated with POTS circuit switched usage will also apply to circuit switched voice and/or circuit switched data transmission by B-Channels associated with 2-wire ISDN ports.																
	NOTE: Access to B Channel or D Channel Packet capabilities will be available only through BFR/New Business Request Process. Rates for the packet capabilities will be determined via the Bona Fide Request/New Business Request Process.																
UNBUNDLED LOCAL EXCHANGE SWITCHING(PORTS)																	
	EXCHANGE PORT RATES																
	The DS1 Port rates below for 4-Wire DDITS Trunk Port and 4-Wire ISDN Port in this rate exhibit apply to the embedded base in place as of 10/2/03 until 4/1/04. After 4/1/04 these rates shall revert to tariff rates or a separate agreement.																
	Requests for 4-Wire DDITS Trunk Ports with 4-Wire ISDN DS1 Ports after the effective date of this amendment shall be provided pursuant to a separate agreement or tariff at BellSouth's discretion.																
		Exchange Ports - 2-Wire DID Port			UEPEX	UEPP2	8.73	78.41	15.82	41.94	4.26						
		Exchange Ports - DDITS Port - 4-Wire DS1 Port with DID capability (E:4/1/2004)			UEPDD	UEPDD	54.95	151.11	77.75	48.81	3.10						
		Exchange Ports - 2-Wire ISDN Port (See Notes below.)			UEPTX, UEPSX	U1PMA	8.83	46.83	50.68	27.64	11.93						
		All Features Offered			UEPTX, UEPSX	UEPVF	2.26	0.00	0.00								
		Exchange Ports - 2-Wire ISDN Port -- Channel Profiles			UEPTX, UEPSX	U1UMA	0.00	0.00	0.00								
	NOTE: Access to B Channel or D Channel Packet capabilities will be available only through BFR/New Business Request Process. Rates for the packet capabilities will be determined via the Bona Fide Request/New Business Request Process.																

UNBUNDLED NETWORK ELEMENTS - Florida													Attachment: 2		Exhibit: A	
CATEGORY	RATE ELEMENTS	Interim	Zone	BCS	USOC	RATES ($)					Svc Order Submitted Elec per LSR	Svc Order Submitted Manually per LSR	Incremental Charge - Manual Svc Order vs. Electronic-1st	Incremental Charge - Manual Svc Order vs. Electronic-Add'l	Incremental Charge - Manual Svc Order vs. Electronic-Disc 1st	Incremental Charge - Manual Svc Order vs. Electronic-Disc Add'l
						Rec	Nonrecurring		Nonrecurring Disconnect		OSS Rates ($)					
							First	Add'l	First	Add'l	SOMEC	SOMAN	SOMAN	SOMAN	SOMAN	SOMAN
	NOTE: Access to B Channel or D Channel Packet capabilities will be available only through BFR/New Business Request Process. Rates for the packet capabilities will be determined via the Bona Fide Request/New Business Request Process.															
	EXCHANGE PORT RATES (continued)															
	Exchange Ports - 4-Wire ISDN DS1 Port with Detailed E911 Locator Capability (E:4/1/2004)			UEPEX	UEPEX	82.74	174.61	95.17	49.80	18.23						
	Exchange Ports - 4-Wire ISDN DS1 Port (E:4/1/2004)			UEPDX	UEPDX	82.74	174.61	95.17	49.80	18.23						
	Physical Collocation - DS1 Cross-Connects			UEPEX UEPDX	PE1P1	1.32	27.77	15.52	5.93	4.77						
	Virtual collocation - Special Access & UNE, cross-connect per DS1			UEPEX UEPDX	CNC1X	7.50	155.00	14.00								
	Detailed E911 with Locator Capability (required with UEPEX port)															
	Unbundled Exchange Ports, 4-Wire ISDN DS1 Port - E911 Locator Capability - Initial Profile Establishment per CLEC per State			UEPEX	UEP1A	0.00	1,809.00		151.12							
	Unbundled Exchange Ports, 4-Wire ISDN DS1 Port - E911 Locator Capability - Subsequent Profile Changes, Additions, Deletions			UEPEX	UEP1B	0.00	175.66									
	New or Additional PRI Telephone Numbers															
	Unbundled Exchange Ports, 4-Wire ISDN DS1 Port - E911 Locator Capability 2-way Telephone Numbers, per number in E911 profile [New or Additional]			UEPEX	UEP1C	0.0699	0.5412									
	Unbundled Exchange Ports, 4-Wire ISDN DS1 Port - E911 Locator Capability - Outdial Telephone Numbers, per number in E911 profile [New or Additional]			UEPEX	UEP1D	0.0699	12.71	12.71								
	Unbundled Exchange Ports, 4-Wire ISDN DS1 Port - Inward Telephone Numbers - Inward Data Only Option [New or Additional]			UEPDX	UEP1E	0.00	0.5412									
	Exchange Ports - 4-Wire ISDN DS1 Port - Subsequent [New] Inward Tel Numbers [Customer Testing Purposes]			UEPEX	PR7ZT	0.00	25.42	25.42								
	LOCAL NUMBER PORTABILITY															
	Local Number Portability (1 per port)			UEPEX UEPDX	LNPCN	1.75										
	INTERFACE (Provsioning Only)															
	Voice/Data			UEPEX	PR71V	0.00	0.00	0.00								
	Digital Data			UEPEX	PR71D	0.00	0.00	0.00								
	Inward Data			UEPDX	PR71E	0.00	0.00	0.00								
	New or Additional Channel															
	New or Additional - Voice/Data "B" Channel			UEPEX	PR7BV	0.00	15.48									
	New or Additional - Digital Data "B" Channel			UEPEX	PR7BF	0.00	15.48									
	New or Additional Inward Data "B" Channel			UEPDX	PR7BD	0.00	15.48									
	New or Additional Useage Sensitive Voice Data "B" Channel			UEPEX	PR7BS	0.00										
	New or Additional Useage Sensitive Digital Data "B" Channel			UEPEX	PR7BU	0.00										
	New or Additional PRI "D" Channel			UEPEX	PR7EX	0.00	15.48									
	CALL TYPES															
	Inward			UEPEX UEPDX	PR7C1	0.00	0.00	0.00								
	Outward			UEPEX	PR7CO	0.00	0.00	0.00								
	Two-way			UEPEX	PR7CC	0.00	0.00	0.00								
	UNBUNDLED PORT with REMOTE CALL FORWARDING CAPABILITY															
	UNBUNDLED REMOTE CALL FORWARDING SERVICE - RESIDENCE															
	Unbundled Remote Call Forwarding Service, Area Calling, Res			UEPVR	UERAC	1.40	3.74	3.63	1.88	1.80						
	Unbundled Remote Call Forwarding Service, Local Calling - Res			UEPVR	UERLC	1.40	3.74	3.63	1.88	1.80						
	Unbundled Remote Call Forwarding Service, InterLATA - Res			UEPVR	UERTE	1.40	3.74	3.63	1.88	1.80						
	Unbundled Remote Call Forwarding Service, IntraLATA - Res			UEPVR	UERTR	1.40	3.74	3.63	1.88	1.80						
	Non-Recurring															
	Unbundled Remote Call Forwarding Service - Conversion - Switch-as-is			UEPVR	USAC2		0.102	0.102								
	Unbundled Remote Call Forwarding Service - Conversion with allowed change (PIC and LPIC)			UEPVR	USACC		0.102	0.102								
	UNBUNDLED REMOTE CALL FORWARDING - Bus															
	Unbundled Remote Call Forwarding Service, Area Calling - Bus			UEPVB	UERAC	1.40	3.74	3.63	1.88	1.80						

UNBUNDLED NETWORK ELEMENTS - Florida														Attachment: 2		Exhibit: A	
CATEGORY	RATE ELEMENTS	Interim	Zone	BCS	USOC	RATES ($)					Svc Order Submitted Elec per LSR	Svc Order Submitted Manually per LSR	Incremental Charge - Manual Svc Order vs. Electronic-1st	Incremental Charge - Manual Svc Order vs. Electronic-Add'l	Incremental Charge - Manual Svc Order vs. Electronic-Disc 1st	Incremental Charge - Manual Svc Order vs. Electronic-Disc Add'l
						Rec	Nonrecurring		Nonrecurring Disconnect		OSS Rates ($)					
							First	Add'l	First	Add'l	SOMEC	SOMAN	SOMAN	SOMAN	SOMAN	SOMAN
	Unbundled Remote Call Forwarding Service, Local Calling - Bus			UEPVB	UERLC	1.40	3.74	3.63	1.88	1.80						
	Unbundled Remote Call Forwarding Service, InterLATA - Bus			UEPVB	UERTE	1.40	3.74	3.63	1.88	1.80						
	Unbundled Remote Call Forwarding Service, IntraLATA - Bus			UEPVB	UERTR	1.40	3.74	3.63	1.88	1.80						
	Unbundled Remote Call Forwarding Service Expanded and Exception Local Calling			UEPVB	UERVJ	1.40	3.74	3.63	1.88	1.80						
Non-Recurring																
	Unbundled Remote Call Forwarding Service - Conversion - Switch-as-is			UEPVB	USAC2		0.102	0.102								
	Unbundled Remote Call Forwarding Service - Conversion with allowed change (PIC and LPIC)			UEPVB	USACC		0.102	0.102								
UNBUNDLED LOCAL SWITCHING, PORT USAGE																
End Office Switching (Port Usage)																
	End Office Switching Function, Per MOU					0.0007662										
	End Office Trunk Port - Shared, Per MOU					0.000164										
Tandem Switching (Port Usage) (Local or Access Tandem)																
	Tandem Switching Function Per MOU					0.0001319										
	Tandem Trunk Port - Shared, Per MOU					0.000235										
	Tandem Switching Function Per MOU (Melded)					0.000027185										
	Tandem Trunk Port - Shared, Per MOU (Melded)					0.000048434										
	Melded Factor: 20.61% of the Tandem Rate															
Common Transport																
	Common Transport - Per Mile, Per MOU					0.0000035										
	Common Transport - Facilities Termination Per MOU					0.0004372										
UNBUNDLED PORT/LOOP COMBINATIONS - COST BASED RATES																
Cost Based Rates are applied where BellSouth is required by FCC and/or State Commission rule to provide Unbundled Local Switching or Switch Ports.																
Features shall apply to the Unbundled Port/Loop Combination - Cost Based Rate section in the same manner as they are applied to the Stand-Alone Unbundled Port section of this Rate Exhibit.																
End Office and Tandem Switching Usage and Common Transport Usage rates in the Port section of this rate exhibit shall apply to all combinations of loop/port network elements except for UNE Coin Port/Loop Combinations.																
The first and additional Port nonrecurring charges apply to Not Currently Combined Combos. For Currently Combined Combos the nonrecurring charges shall be those identified in the Nonrecurring - Currently Combined sections.																
2-WIRE VOICE GRADE LOOP WITH 2-WIRE LINE PORT (RES)																
UNE Port/Loop Combination Rates																
	2-Wire VG Loop/Port Combo - Zone 1		1			10.94										
	2-Wire VG Loop/Port Combo - Zone 2		2			15.05										
	2-Wire VG Loop/Port Combo - Zone 3		3			25.80										
UNE Loop Rates																
	2-Wire Voice Grade Loop (SL1) - Zone 1		1	UEPRX	UEPLX	9.77										
	2-Wire Voice Grade Loop (SL1) - Zone 2		2	UEPRX	UEPLX	13.88										
	2-Wire Voice Grade Loop (SL1) - Zone 3		3	UEPRX	UEPLX	24.63										
2-Wire Voice Grade Line Port Rates (Res)																
	2-Wire voice unbundled port - residence			UEPRX	UEPRL	1.17	53.31	26.46	27.50	8.37						
	2-Wire voice unbundled port with Caller ID - res			UEPRX	UEPRC	1.17	53.31	26.46	27.50	8.37						
	2-Wire voice unbundled port outgoing only - res			UEPRX	UEPRO	1.17	53.31	26.46	27.50	8.37						
	2-Wire voice unbundled Florida Area Calling with Caller ID - res			UEPRX	UEPAF	1.17	53.31	26.46	27.50	8.37						
	2-Wire voice unbundles res, low usage line port with Caller ID (LUM)			UEPRX	UEPAP	1.17	53.31	26.46	27.50	8.37						
	2-Wire voice unbundled Florida extended dialing with Caller ID			UEPRX	UEPA1	1.17	53.31	26.46	27.50	8.37						
	2-Wire voice unbundled Florida extended dialing port without Caller ID capability			UEPRX	UEPA8	1.17	53.31	26.46	27.50	8.37						
	2-Wire voice unbundled Florida Area Calling Port without Caller ID Capability			UEPRX	UEPA9	1.17	53.31	26.46	27.50	8.37						
	2-Wire voice unbundled Low Usage Line Port without Caller ID Capability			UEPRX	UEPRT	1.17	53.31	26.46	27.50	8.37						
FEATURES																
	All Features Offered			UEPRX	UEPVF	2.26	0.00	0.00								
LOCAL NUMBER PORTABILITY																
	Local Number Portability (1 per port)			UEPRX	LNPCX	0.35										
NONRECURRING CHARGES (NRCs) - CURRENTLY COMBINED																

UNBUNDLED NETWORK ELEMENTS - Florida													Attachment: 2		Exhibit: A	
CATEGORY	RATE ELEMENTS	Interim	Zone	BCS	USOC	RATES ($)					Svc Order Submitted Elec per LSR	Svc Order Submitted Manually per LSR	Incremental Charge - Manual Svc Order vs. Electronic-1st	Incremental Charge - Manual Svc Order vs. Electronic-Add'l	Incremental Charge - Manual Svc Order vs. Electronic-Disc 1st	Incremental Charge - Manual Svc Order vs. Electronic-Disc Add'l
						Rec	Nonrecurring		Nonrecurring Disconnect		OSS Rates ($)					
							First	Add'l	First	Add'l	SOMEC	SOMAN	SOMAN	SOMAN	SOMAN	SOMAN
	2-Wire Voice Grade Loop / Line Port Combination - Conversion - Switch-as-is			UEPRX	USAC2		0.102	0.102								
	2-Wire Voice Grade Loop / Line Port Combination - Conversion - Switch with change			UEPRX	USACC		0.102	0.102								
ADDITIONAL NRCs																
	2-Wire Voice Grade Loop/Line Port Combination - Subsequent Activity			UEPRX	USAS2	0.00	0.00	0.00								
	Unbundled Miscellaneous Rate Element, Tag Loop at End User Premise			UEPRX	URETL		8.33	0.83								
OFF/ON PREMISES EXTENSION CHANNELS																
	2 Wire Analog Voice Grade Extension Loop – Non-Design		1	UEPRX	UEAEN	10.69	49.57	22.83	25.62	6.57						
	2 Wire Analog Voice Grade Extension Loop – Non-Design		2	UEPRX	UEAEN	15.20	49.57	22.83	25.62	6.57						
	2 Wire Analog Voice Grade Extension Loop – Non-Design		3	UEPRX	UEAEN	26.97	49.57	22.83	25.62	6.57						
	2 Wire Analog Voice Grade Extension Loop – Design		1	UEPRX	UEAED	12.24	135.75	82.47	63.53	12.01						
	2 Wire Analog Voice Grade Extension Loop – Design		2	UEPRX	UEAED	17.40	135.75	82.47	63.53	12.01						
	2 Wire Analog Voice Grade Extension Loop – Design		3	UEPRX	UEAED	30.87	135.75	82.47	63.53	12.01						
INTEROFFICE TRANSPORT																
	Interoffice Transport - Dedicated - 2 Wire Voice Grade - Facility Termination			UEPRX	U1TV2	25.32	47.35	31.78								
	Interoffice Transport - Dedicated - 2 Wire Voice Grade - Per Mile or Fraction Mile			UEPRX	U1TVM	0.0091	0.00	0.00								
2-WIRE VOICE GRADE LOOP WITH 2-WIRE LINE PORT (BUS)																
UNE Port/Loop Combination Rates																
	2-Wire VG Loop/Port Combo - Zone 1		1			10.94										
	2-Wire VG Loop/Port Combo - Zone 2		2			15.05										
	2-Wire VG Loop/Port Combo - Zone 3		3			25.80										
UNE Loop Rates																
	2-Wire Voice Grade Loop (SL1) - Zone 1		1	UEPBX	UEPLX	9.77										
	2-Wire Voice Grade Loop (SL1) - Zone 2		2	UEPBX	UEPLX	13.88										
	2-Wire Voice Grade Loop (SL1) - Zone 3		3	UEPBX	UEPLX	24.63										
2-Wire Voice Grade Line Port (Bus)																
	2-Wire voice unbundled port without Caller ID - bus			UEPBX	UEPBL	1.17	53.31	26.46	27.50	8.37						
	2-Wire voice unbundled port with Caller + E484 ID - bus			UEPBX	UEPBC	1.17	53.31	26.46	27.50	8.37						
	2-Wire voice unbundled port outgoing only - bus			UEPBX	UEPBO	1.17	53.31	26.46	27.50	8.37						
	2-Wire voice unbundled incoming only port with Caller ID - Bus			UEPBX	UEPB1	1.17	53.31	26.46	27.50	8.37						
	2-Wire voice unbundled Incoming Only Port without Caller ID Capability			UEPBX	UEPBE	1.17	53.31	26.46	27.50	8.37						
LOCAL NUMBER PORTABILITY																
	Local Number Portability (1 per port)			UEPBX	LNPCX	0.35										
FEATURES																
	All Features Offered			UEPBX	UEPVF	2.26	0.00	0.00								
NONRECURRING CHARGES (NRCs) - CURRENTLY COMBINED																
	2-Wire Voice Grade Loop / Line Port Combination - Conversion - Switch-as-is			UEPBX	USAC2		0.102	0.102								
	2-Wire Voice Grade Loop / Line Port Combination - Conversion - Switch with change			UEPBX	USACC		0.102	0.102								
ADDITIONAL NRCs																
	2-Wire Voice Grade Loop/Line Port Combination - Subsequent Activity			UEPBX	USAS2		0.00	0.00								
	Unbundled Miscellaneous Rate Element, Tag Loop at End User Premise			UEPBX	URETL		8.33	0.83								
OFF/ON PREMISES EXTENSION CHANNELS																
	2 Wire Analog Voice Grade Extension Loop – Non-Design		1	UEPBX	UEAEN	10.69	49.57	22.83	25.62	6.57						
	2 Wire Analog Voice Grade Extension Loop – Non-Design		2	UEPBX	UEAEN	15.20	49.57	22.83	25.62	6.57						
	2 Wire Analog Voice Grade Extension Loop – Non-Design		3	UEPBX	UEAEN	26.97	49.57	22.83	25.62	6.57						
	2 Wire Analog Voice Grade Extension Loop – Design		1	UEPBX	UEAED	12.24	135.75	82.47	63.53	12.01						
	2 Wire Analog Voice Grade Extension Loop – Design		2	UEPBX	UEAED	17.40	135.75	82.47	63.53	12.01						
	2 Wire Analog Voice Grade Extension Loop – Design		3	UEPBX	UEAED	30.87	135.75	82.47	63.53	12.01						
INTEROFFICE TRANSPORT																

UNBUNDLED NETWORK ELEMENTS - Florida														Attachment: 2		Exhibit: A	
CATEGORY		RATE ELEMENTS	Interim	Zone	BCS	USOC	RATES ($)					Svc Order Submitted Elec per LSR	Svc Order Submitted Manually per LSR	Incremental Charge - Manual Svc Order vs. Electronic-1st	Incremental Charge - Manual Svc Order vs. Electronic-Add'l	Incremental Charge - Manual Svc Order vs. Electronic-Disc 1st	Incremental Charge - Manual Svc Order vs. Electronic-Disc Add'l
							Rec	Nonrecurring		Nonrecurring Disconnect		OSS Rates ($)					
								First	Add'l	First	Add'l	SOMEC	SOMAN	SOMAN	SOMAN	SOMAN	SOMAN
		Interoffice Transport - Dedicated - 2 Wire Voice Grade - Facility Termination			UEPBX	U1TV2	25.32	47.35	31.78								
		Interoffice Transport - Dedicated - 2 Wire Voice Grade - Per Mile or Fraction Mile			UEPBX	U1TVM	0.0091	0.00	0.00								
	2-WIRE VOICE GRADE LOOP WITH 2-WIRE LINE PORT (RES - PBX)																
	UNE Port/Loop Combination Rates																
		2-Wire VG Loop/Port Combo - Zone 1		1			10.94										
		2-Wire VG Loop/Port Combo - Zone 2		2			15.05										
		2-Wire VG Loop/Port Combo - Zone 3		3			25.80										
	UNE Loop Rates																
		2-Wire Voice Grade Loop (SL 1) - Zone 1		1	UEPRG	UEPLX	9.77										
		2-Wire Voice Grade Loop (SL 1) - Zone 2		2	UEPRG	UEPLX	13.88										
		2-Wire Voice Grade Loop (SL 1) - Zone 3		3	UEPRG	UEPLX	24.63										
	2-Wire Voice Grade Line Port Rates (RES - PBX)																
		2-Wire VG Unbundled Combination 2-Way PBX Trunk Port - Res			UEPRG	UEPRD	1.17	174.81	100.65	75.88	12.73						
	LOCAL NUMBER PORTABILITY																
		Local Number Portability (1 per port)			UEPRG	LNPCP	3.15	0.00	0.00								
	FEATURES																
		All Features Offered			UEPRG	UEPVF	2.26	0.00	0.00								
	NONRECURRING CHARGES (NRCs) - CURRENTLY COMBINED																
		2-Wire Voice Grade Loop/ Line Port Combination (PBX) - Conversion - Switch-As-Is			UEPRG	USAC2		8.45	1.91								
		2-Wire Voice Grade Loop/ Line Port Combination (PBX) - Conversion - Switch with Change			UEPRG	USACC		8.45	1.91								
	ADDITIONAL NRCs																
		2-Wire Voice Grade Loop/ Line Port Combination (PBX) - Subsequent Activity			UEPRG	USAS2	0.00	0.00	0.00								
		PBX Subsequent Activity - Change/Rearrange Multiline Hunt Group						7.86	7.86								
		Unbundled Miscellaneous Rate Element, Tag Loop at End User Premise			UEPRG	URETL		8.33	0.83								
	OFF/ON PREMISES EXTENSION CHANNELS																
		Local Channel Voice grade, per termination		1	UEPRG	P2JHX	12.24	135.75	82.47	63.53	12.01						
		Local Channel Voice grade, per termination		2	UEPRG	P2JHX	17.40	135.75	82.47	63.53	12.01						
		Local Channel Voice grade, per termination		3	UEPRG	P2JHX	30.87	135.75	82.47	63.53	12.01						
		Non-Wire Direct Serve Channel Voice Grade		1	UEPRG	SDD2X	12.92	120.38	43.56	95.00	10.54						
		Non-Wire Direct Serve Channel Voice Grade		2	UEPRG	SDD2X	18.36	120.38	43.56	95.00	10.54						
		Non-Wire Direct Serve Channel Voice Grade		3	UEPRG	SDD2X	32.58	120.38	43.56	95.00	10.54						
	INTEROFFICE TRANSPORT																
		Interoffice Transport - Dedicated - 2 Wire Voice Grade - Facility Termination			UEPRG	U1TV2	25.32	47.35	31.78								
		Interoffice Transport - Dedicated - 2 Wire Voice Grade - Per Mile or Fraction Mile			UEPRG	U1TVM	0.0091	0.00	0.00								
	2-WIRE VOICE GRADE LOOP WITH 2-WIRE LINE PORT (BUS - PBX)																
	UNE Port/Loop Combination Rates																
		2-Wire VG Loop/Port Combo - Zone 1		1			10.94										
		2-Wire VG Loop/Port Combo - Zone 2		2			15.05										
		2-Wire VG Loop/Port Combo - Zone 3		3			25.80										
	UNE Loop Rates																
		2-Wire Voice Grade Loop (SL 1) - Zone 1		1	UEPPX	UEPLX	9.77										
		2-Wire Voice Grade Loop (SL 1) - Zone 2		2	UEPPX	UEPLX	13.88										
		2-Wire Voice Grade Loop (SL 1) - Zone 3		3	UEPPX	UEPLX	24.63										
	2-Wire Voice Grade Line Port Rates (BUS - PBX)																
		Line Side Unbundled Combination 2-Way PBX Trunk Port - Bus			UEPPX	UEPPC	1.17	174.81	100.65	75.88	12.73						
		Line Side Unbundled Outward PBX Trunk Port - Bus			UEPPX	UEPPO	1.17	174.81	100.65	75.88	12.73						
		Line Side Unbundled Incoming PBX Trunk Port - Bus			UEPPX	UEPP1	1.17	174.81	100.65	75.88	12.73						
		2-Wire Voice Unbundled PBX LD Terminal Ports			UEPPX	UEPLD	1.17	174.81	100.65	75.88	12.73						

UNBUNDLED NETWORK ELEMENTS - Florida													Attachment: 2		Exhibit: A	
CATEGORY	RATE ELEMENTS	Interim	Zone	BCS	USOC	RATES ($)					Svc Order Submitted Elec per LSR	Svc Order Submitted Manually per LSR	Incremental Charge - Manual Svc Order vs. Electronic-1st	Incremental Charge - Manual Svc Order vs. Electronic-Add'l	Incremental Charge - Manual Svc Order vs. Electronic-Disc 1st	Incremental Charge - Manual Svc Order vs. Electronic-Disc Add'l
						Rec	Nonrecurring		Nonrecurring Disconnect		OSS Rates ($)					
							First	Add'l	First	Add'l	SOMEC	SOMAN	SOMAN	SOMAN	SOMAN	SOMAN
	2-Wire Voice Unbundled 2-Way Combination PBX Usage Port			UEPPX	UEPXA	1.17	174.81	100.65	75.88	12.73						
	2-Wire Voice Unbundled PBX Toll Terminal Hotel Ports			UEPPX	UEPXB	1.17	174.81	100.65	75.88	12.73						
	2-Wire Voice Unbundled PBX LD DDD Terminals Port			UEPPX	UEPXC	1.17	174.81	100.65	75.88	12.73						
	2-Wire Voice Unbundled PBX LD Terminal Switchboard Port			UEPPX	UEPXD	1.17	174.81	100.65	75.88	12.73						
	2-Wire Voice Unbundled PBX LD Terminal Switchboard IDD Capable Port			UEPPX	UEPXE	1.17	174.81	100.65	75.88	12.73						
	2-Wire Voice Unbundled 2-Way PBX Hotel/Hospital Economy Administrative Calling Port			UEPPX	UEPXL	1.17	174.81	100.65	75.88	12.73						
	2-Wire Voice Unbundled 2-Way PBX Hotel/Hospital Economy Room Calling Port			UEPPX	UEPXM	1.17	174.81	100.65	75.88	12.73						
	2-Wire Voice Unbundled 1-Way Outgoing PBX Hotel/Hospital Discount Room Calling Port			UEPPX	UEPXO	1.17	174.81	100.65	75.88	12.73						
	2-Wire Voice Unbundled 1-Way Outgoing PBX Measured Port			UEPPX	UEPXS	1.17	174.81	100.65	75.88	12.73						
LOCAL NUMBER PORTABILITY																
	Local Number Portability (1 per port)			UEPPX	LNPCP	3.15	0.00	0.00								
FEATURES																
	All Features Offered			UEPPX	UEPVF	2.26	0.00	0.00								
NONRECURRING CHARGES (NRCs) - CURRENTLY COMBINED																
	2-Wire Voice Grade Loop/ Line Port Combination (PBX) - Conversion - Switch-As-Is			UEPPX	USAC2		8.45	1.91								
	2-Wire Voice Grade Loop/ Line Port Combination (PBX) - Conversion - Switch with Change			UEPPX	USACC		8.45	1.91								
ADDITIONAL NRCs																
	2-Wire Voice Grade Loop/ Line Port Combination (PBX) - Subsequent Activity			UEPPX	USAS2	0.00	0.00	0.00								
	PBX Subsequent Activity - Change/Rearrange Multiline Hunt Group						7.86	7.86								
	Unbundled Miscellaneous Rate Element, Tag Loop at End User Premise			UEPPX	URETL		8.33	0.83								
OFF/ON PREMISES EXTENSION CHANNELS																
	Local Channel Voice grade, per termination		1	UEPPX	P2JHX	12.24	135.75	82.47	63.53	12.01						
	Local Channel Voice grade, per termination		2	UEPPX	P2JHX	17.40	135.75	82.47	63.53	12.01						
	Local Channel Voice grade, per termination		3	UEPPX	P2JHX	30.87	135.75	82.47	63.53	12.01						
	Non-Wire Direct Serve Channel Voice Grade		1	UEPPX	SDD2X	12.92	120.38	43.56	95.00	10.54						
	Non-Wire Direct Serve Channel Voice Grade		2	UEPPX	SDD2X	18.36	120.38	43.56	95.00	10.54						
	Non-Wire Direct Serve Channel Voice Grade		3	UEPPX	SDD2X	32.58	120.38	43.56	95.00	10.54						
INTEROFFICE TRANSPORT																
	Interoffice Transport - Dedicated - 2 Wire Voice Grade - Facility Termination			UEPPX	U1TV2	25.32	47.35	31.78								
	Interoffice Transport - Dedicated - 2 Wire Voice Grade - Per Mile or Fraction Mile			UEPPX	U1TVM	0.0091	0.00	0.00								
2-WIRE VOICE GRADE LOOP WITH 2-WIRE ANALOG LINE COIN PORT																
UNE Port/Loop Combination Rates																
	2-Wire VG Coin Port/Loop Combo – Zone 1		1			10.94										
	2-Wire VG Coin Port/Loop Combo – Zone 2		2			15.05										
	2-Wire VG Coin Port/Loop Combo – Zone 3		3			25.80										
UNE Loop Rates																
	2-Wire Voice Grade Loop (SL1) - Zone 1		1	UEPCO	UEPLX	9.77										
	2-Wire Voice Grade Loop (SL1) - Zone 2		2	UEPCO	UEPLX	13.88										
	2-Wire Voice Grade Loop (SL1) - Zone 3		3	UEPCO	UEPLX	24.63										
2-Wire Voice Grade Line Ports (COIN)																
	2-Wire Coin 2-Way with Operator Screening and Blocking: 011, 900/976, 1+DDD (FL)			UEPCO	UEP2F	1.17	53.31	26.46	27.50	8.37						
	2-Wire Coin 2-Way with Operator Screening and 011 Blocking (FL)			UEPCO	UEPFA	1.17	53.31	26.46	27.50	8.37						
	2-Wire Coin 2-Way with Operator Screening and Blocking: 900/976, 1+DDD, 011+, and Local (FL)			UEPCO	UEPCG	1.17	53.31	26.46	27.50	8.37						
	2-Wire Coin Outward with Operator Screening and 011 Blocking (AL, FL)			UEPCO	UEPRK	1.17	53.31	26.46	27.50	8.37						

UNBUNDLED NETWORK ELEMENTS - Florida														Attachment: 2		Exhibit: A	
CATEGORY		RATE ELEMENTS	Interim	Zone	BCS	USOC	RATES ($)					Svc Order Submitted Elec per LSR	Svc Order Submitted Manually per LSR	Incremental Charge - Manual Svc Order vs. Electronic-1st	Incremental Charge - Manual Svc Order vs. Electronic-Add'l	Incremental Charge - Manual Svc Order vs. Electronic-Disc 1st	Incremental Charge - Manual Svc Order vs. Electronic-Disc Add'l
							Rec	Nonrecurring		Nonrecurring Disconnect		OSS Rates ($)					
								First	Add'l	First	Add'l	SOMEC	SOMAN	SOMAN	SOMAN	SOMAN	SOMAN
		2-Wire Coin Outward with Operator Screening and Blocking: 900/976, 1+DDD, 011+ (FL)			UEPCO	UEPOF	1.17	53.31	26.46	27.50	8.37						
		2-Wire Coin Outward with Operator Screening and Blocking: 900/976, 1+DDD, 011+, and Local (FL, GA)			UEPCO	UEPCQ	1.17	53.31	26.46	27.50	8.37						
		2-Wire 2-Way Smartline with 900/976 (all states except LA)			UEPCO	UEPCK	1.17	53.31	26.46	27.50	8.37						
		2-Wire Coin Outward Smartline with 900/976 (all states except LA)			UEPCO	UEPCR	1.17	53.31	26.46	27.50	8.37						
	ADDITIONAL UNE COIN PORT/LOOP (RC)																
		UNE Coin Port/Loop Combo Usage (Flat Rate)			UEPCO	URECU	1.86	0.00	0.00	0.00	0.00						
	LOCAL NUMBER PORTABILITY																
		Local Number Portability (1 per port)			UEPCO	LNPCX	0.35										
	NONRECURRING CHARGES - CURRENTLY COMBINED																
		2-Wire Voice Grade Loop / Line Port Combination - Conversion - Switch-as-is			UEPCO	USAC2		0.102	0.102								
		2-Wire Voice Grade Loop / Line Port Combination - Conversion - Switch with change			UEPCO	USACC		0.102	0.102								
	ADDITIONAL NRCs																
		2-Wire Voice Grade Loop/Line Port Combination - Subsequent Activity			UEPCO	USAS2		0.00	0.00								
		Unbundled Miscellaneous Rate Element, Tag Loop at End User Premise			UEPCO	URETL		8.33	0.83								
	2-WIRE VOICE LOOP/ 2WIRE VOICE GRADE IO TRANSPORT/ 2-WIRE LINE PORT (RES)																
	UNE Port/Loop Combination Rates																
		2-Wire VG Loop/IO Tranport/Port Combo - Zone 1		1			13.64										
		2-Wire VG Loop/IO Tranport/Port Combo - Zone 2		2			18.80										
		2-Wire VG Loop/IO Tranport/Port Combo - Zone 3		3			32.27										
	UNE Loop Rates																
		2-Wire Voice Grade Loop (SL2) - Zone 1		1	UEPFR	UECF2	12.24										
		2-Wire Voice Grade Loop (SL2) - Zone 2		2	UEPFR	UECF2	17.40										
		2-Wire Voice Grade Loop (SL2) - Zone 3		3	UEPFR	UECF2	30.87										
	2-Wire Voice Grade Line Port Rates (Res)																
		2-Wire voice unbundled port - residence			UEPFR	UEPRL	1.40	174.81	100.65	75.88	12.73						
		2-Wire voice unbundled port with Caller ID - res			UEPFR	UEPRC	1.40	174.81	100.65	75.88	12.73						
		2-Wire voice unbundled port outgoing only - res			UEPFR	UEPRO	1.40	174.81	100.65	75.88	12.73						
		2-Wire voice unbundled Florida Area Calling with Caller ID - res			UEPFR	UEPAF	1.40	174.81	100.65	75.88	12.73						
		2-Wire voice unbundles res, low usage line port with Caller ID (LUM)			UEPFR	UEPAP	1.40	174.81	100.65	75.88	12.73						
	INTEROFFICE TRANSPORT																
		Interoffice Transport - Dedicated - 2 Wire Voice Grade - Facility Termination			UEPFR	U1TV2	25.32	47.35	31.78								
		Interoffice Transport - Dedicated - 2 Wire Voice Grade - Per Mile or Fraction Mile			UEPFR	1L5XX	0.0091										
	FEATURES																
		All Features Offered			UEPFR	UEPVF	2.26	0.00	0.00								
	LOCAL NUMBER PORTABILITY																
		Local Number Portability (1 per port)			UEPFR	LNPCX	0.35										
	NONRECURRING CHARGES (NRCs) - CURRENTLY COMBINED																
		2-Wire Loop / Dedicated IO Transport / 2 Wire Line Port Combination - Conversion - Switch-as-is			UEPFR	USAC2		16.97	3.73								
		2-Wire Loop / Dedicated IO Transport / 2 Wire Line Port Combination - Conversion - Switch-With-Change			UEPFR	USACC		16.97	3.73								
		Unbundled Miscellaneous Rate Element, Tag Designed Loop at End User Premise			UEPFR	URETN		11.21	1.10								
	2-WIRE VOICE LOOP/ 2WIRE VOICE GRADE IO TRANSPORT/ 2-WIRE LINE PORT (BUS)																
	UNE Port/Loop Combination Rates																
		2-Wire VG Loop/IO Tranport/Port Combo - Zone 1		1			13.64										
		2-Wire VG Loop/IO Tranport/Port Combo - Zone 2		2			18.80										
		2-Wire VG Loop/IO Tranport/Port Combo - Zone 3		3			32.27										

UNBUNDLED NETWORK ELEMENTS - Florida														Attachment: 2		Exhibit: A	
CATEGORY	RATE ELEMENTS	Interim	Zone	BCS	USOC	RATES ($)					Svc Order Submitted Elec per LSR	Svc Order Submitted Manually per LSR	Incremental Charge - Manual Svc Order vs. Electronic-1st	Incremental Charge - Manual Svc Order vs. Electronic-Add'l	Incremental Charge - Manual Svc Order vs. Electronic-Disc 1st	Incremental Charge - Manual Svc Order vs. Electronic-Disc Add'l
						Rec	Nonrecurring		Nonrecurring Disconnect		OSS Rates ($)					
							First	Add'l	First	Add'l	SOMEC	SOMAN	SOMAN	SOMAN	SOMAN	SOMAN
	UNE Loop Rates															
	2-Wire Voice Grade Loop (SL2) - Zone 1		1	UEPFB	UECF2	12.24										
	2-Wire Voice Grade Loop (SL2) - Zone 2		2	UEPFB	UECF2	17.40										
	2-Wire Voice Grade Loop (SL2) - Zone 3		3	UEPFB	UECF2	30.87										
	2-Wire Voice Grade Line Port (Bus)															
	2-Wire voice unbundled port without Caller ID - bus			UEPFB	UEPBL	1.40	174.81	100.65	75.88	12.73						
	2-Wire voice unbundled port with Caller + E484 ID - bus			UEPFB	UEPBC	1.40	174.81	100.65	75.88	12.73						
	2-Wire voice unbundled port outgoing only - bus			UEPFB	UEPBO	1.40	174.81	100.65	75.88	12.73						
	2-Wire voice unbundled incoming only port with Caller ID - Bus			UEPFB	UEPB1	1.40	174.81	100.65	75.88	12.73						
	LOCAL NUMBER PORTABILITY															
	Local Number Portability (1 per port)			UEPFB	LNPCX	0.35										
	INTEROFFICE TRANSPORT															
	Interoffice Transport - Dedicated - 2 Wire Voice Grade - Facility Termination			UEPFB	U1TV2	25.32	47.35	31.78								
	Interoffice Transport - Dedicated - 2 Wire Voice Grade - Per Mile or Fraction Mile			UEPFB	1L5XX	0.0091										
	FEATURES															
	All Features Offered			UEPFB	UEPVF	2.26	0.00	0.00								
	NONRECURRING CHARGES (NRCs) - CURRENTLY COMBINED															
	2-Wire Loop / Dedicated IO Transport / 2 Wire Line Port Combination - Conversion - Switch-as-is			UEPFB	USAC2		16.97	3.73								
	2-Wire Loop / Dedicated IO Transport / 2 Wire Line Port Combination - Conversion - Switch with change			UEPFB	USACC		16.97	3.73								
	Unbundled Miscellaneous Rate Element, Tag Designed Loop at End User Premise			UEPFB	URETN		11.21	1.10								
	2-WIRE VOICE LOOP/ 2WIRE VOICE GRADE IO TRANSPORT/ 2-WIRE LINE PORT (PBX)															
	UNE Port/Loop Combination Rates															
	2-Wire VG Loop/IO Tranport/Port Combo - Zone 1		1			13.64										
	2-Wire VG Loop/IO Tranport/Port Combo - Zone 2		2			18.80										
	2-Wire VG Loop/IO Tranport/Port Combo - Zone 3		3			32.27										
	UNE Loop Rates															
	2-Wire Voice Grade Loop (SL2) - Zone 1		1	UEPFP	UECF2	12.24										
	2-Wire Voice Grade Loop (SL2) - Zone 2		2	UEPFP	UECF2	17.40										
	2-Wire Voice Grade Loop (SL2) - Zone 3		3	UEPFP	UECF2	30.87										
	2-Wire Voice Grade Line Port Rates (BUS - PBX)															
	Line Side Unbundled Combination 2-Way PBX Trunk Port - Bus			UEPFP	UEPPC	1.40	174.81	100.65	75.88	12.73						
	Line Side Unbundled Outward PBX Trunk Port - Bus			UEPFP	UEPPO	1.40	174.81	100.65	75.88	12.73						
	Line Side Unbundled Incoming PBX Trunk Port - Bus			UEPFP	UEPP1	1.40	174.81	100.65	75.88	12.73						
	2-Wire Voice Unbundled PBX LD Terminal Ports			UEPFP	UEPLD	1.40	174.81	100.65	75.88	12.73						
	2-Wire Voice Unbundled 2-Way Combination PBX Usage Port			UEPFP	UEPXA	1.40	174.81	100.65	75.88	12.73						
	2-Wire Voice Unbundled PBX Toll Terminal Hotel Ports			UEPFP	UEPXB	1.40	174.81	100.65	75.88	12.73						
	2-Wire Voice Unbundled PBX LD DDD Terminals Port			UEPFP	UEPXC	1.40	174.81	100.65	75.88	12.73						
	2-Wire Voice Unbundled PBX LD Terminal Switchboard Port			UEPFP	UEPXD	1.40	174.81	100.65	75.88	12.73						
	2-Wire Voice Unbundled PBX LD Terminal Switchboard IDD Capable Port			UEPFP	UEPXE	1.40	174.81	100.65	75.88	12.73						
	2-Wire Voice Unbundled 2-Way PBX Hotel/Hospital Economy Administrative Calling Port			UEPFP	UEPXL	1.40	174.81	100.65	75.88	12.73						
	2-Wire Voice Unbundled 2-Way PBX Hotel/Hospital Economy Room Calling Port			UEPFP	UEPXM	1.40	174.81	100.65	75.88	12.73						
	2-Wire Voice Unbundled 1-Way Outgoing PBX Hotel/Hospital Discount Room Calling Port			UEPFP	UEPXO	1.40	174.81	100.65	75.88	12.73						
	2-Wire Voice Unbundled 1-Way Outgoing PBX Measured Port			UEPFP	UEPXS	1.40	174.81	100.65	75.88	12.73						
	LOCAL NUMBER PORTABILITY															
	Local Number Portability (1 per port)			UEPFP	LNPCP	3.15	0.00	0.00								
	INTEROFFICE TRANSPORT															
	Interoffice Transport - Dedicated - 2 Wire Voice Grade - Facility Termination			UEPFP	U1TV2	25.32	47.35	31.78								

UNBUNDLED NETWORK ELEMENTS - Florida													Attachment: 2		Exhibit: A	
CATEGORY	RATE ELEMENTS	Interim	Zone	BCS	USOC	RATES ($)					Svc Order Submitted Elec per LSR	Svc Order Submitted Manually per LSR	Incremental Charge - Manual Svc Order vs. Electronic-1st	Incremental Charge - Manual Svc Order vs. Electronic-Add'l	Incremental Charge - Manual Svc Order vs. Electronic-Disc 1st	Incremental Charge - Manual Svc Order vs. Electronic-Disc Add'l
						Rec	Nonrecurring		Nonrecurring Disconnect		OSS Rates ($)					
							First	Add'l	First	Add'l	SOMEC	SOMAN	SOMAN	SOMAN	SOMAN	SOMAN
	Interoffice Transport - Dedicated - 2 Wire Voice Grade - Per Mile or Fraction Mile			UEPFP	1L5XX	0.0091										
FEATURES																
	All Features Offered			UEPFP	UEPVF	2.26	0.00	0.00								
NONRECURRING CHARGES (NRCs) - CURRENTLY COMBINED																
	2-Wire Loop / Dedicated IO Transport / 2 Wire Line Port Combination - Conversion - Switch-as-is			UEPFP	USAC2		16.97	3.73								
	2-Wire Loop / Dedicated IO Transport / 2 Wire Line Port Combination - Conversion - Switch with change			UEPFP	USACC		16.97	3.73								
	Unbundled Miscellaneous Rate Element, Tag Designed Loop at End User Premise			UEPFP	URETN		11.21	1.10								
UNBUNDLED PORT/LOOP COMBINATIONS - COST BASED RATES																
2-WIRE VOICE GRADE LOOP- BUS ONLY - WITH 2-WIRE DID TRUNK PORT																
UNE Port/Loop Combination Rates																
	2-Wire VG Loop/2-Wire DID Trunk Port Combo - UNE Zone 1		1			20.95										
	2-Wire VG Loop/2-Wire DID Trunk Port Combo - UNE Zone 2		2			26.11										
	2-Wire VG Loop/2-Wire DID Trunk Port Combo - UNE Zone 3		3			39.58										
UNE Loop Rates																
	2-Wire Analog Voice Grade Loop - (SL2) - UNE Zone 1		1	UEPPX	UECD1	12.24										
	2-Wire Analog Voice Grade Loop - (SL2) - UNE Zone 2		2	UEPPX	UECD1	17.40										
	2-Wire Analog Voice Grade Loop - (SL2) - UNE Zone 3		3	UEPPX	UECD1	30.87										
UNE Port Rate																
	Exchange Ports - 2-Wire DID Port			UEPPX	UEPD1	8.71	214.16	98.29								
NONRECURRING CHARGES - CURRENTLY COMBINED																
	2-Wire Voice Grade Loop / 2-Wire DID Trunk Port Combination - Switch-as-is			UEPPX	USAC1		7.85	1.87								
	2-Wire Voice Grade Loop / 2-Wire DID Trunk Port Conversion with BellSouth Allowable Changes			UEPPX	USA1C		7.85	1.87								
ADDITIONAL NRCs																
	2-Wire DID Subsequent Activity - Add Trunks, Per Trunk			UEPPX	USAS1		32.26	32.26								
	Unbundled Miscellaneous Rate Element, Tag Designed Loop at End User Premise			UEPPX	URETN		11.21	1.10								
Telephone Number/Trunk Group Establisment Charges																
	DID Trunk Termination (One Per Port)			UEPPX	NDT	0.00	0.00	0.00								
	DID Numbers, Establish Trunk Group and Provide First Group of 20 DID Numbers			UEPPX	NDZ	0.00	0.00	0.00								
	Additional DID Numbers for each Group of 20 DID Numbers			UEPPX	ND4	0.00	0.00	0.00								
	DID Numbers, Non- consecutive DID Numbers , Per Number			UEPPX	ND5	0.00	0.00	0.00								
	Reserve Non-Consecutive DID numbers			UEPPX	ND6	0.00	0.00	0.00								
	Reserve DID Numbers			UEPPX	NDV	0.00	0.00	0.00								
LOCAL NUMBER PORTABILITY																
	Local Number Portability (1 per port)			UEPPX	LNPCP	3.15	0.00	0.00								
2-WIRE ISDN DIGITAL GRADE LOOP WITH 2-WIRE ISDN DIGITAL LINE SIDE PORT																
UNE Port/Loop Combination Rates																
	2W ISDN Digital Grade Loop/2W ISDN Digital Line Side Port - UNE Zone 1		1	UEPPB UEPPR		22.63										
	2W ISDN Digital Grade Loop/2W ISDN Digital Line Side Port - UNE Zone 2		2	UEPPB UEPPR		29.05										
	2W ISDN Digital Grade Loop/2W ISDN Digital Line Side Port - UNE Zone 3		3	UEPPB UEPPR		45.84										
UNE Loop Rates																
	2-Wire ISDN Digital Grade Loop - UNE Zone 1		1	UEPPB UEPPR	USL2X	15.25										
	2-Wire ISDN Digital Grade Loop - UNE Zone 2		2	UEPPB UEPPR	USL2X	21.67										
	2-Wire ISDN Digital Grade Loop - UNE Zone 3		3	UEPPB UEPPR	USL2X	38.46										
UNE Port Rate																
	Exchange Port - 2-Wire ISDN Line Side Port			UEPPB UEPPR	UEPPB	7.38	194.52	145.09								
NONRECURRING CHARGES - CURRENTLY COMBINED																

UNBUNDLED NETWORK ELEMENTS - Florida													Attachment: 2		Exhibit: A	
CATEGORY	RATE ELEMENTS	Interim	Zone	BCS	USOC	RATES ($)					Svc Order Submitted Elec per LSR	Svc Order Submitted Manually per LSR	Incremental Charge - Manual Svc Order vs. Electronic-1st	Incremental Charge - Manual Svc Order vs. Electronic-Add'l	Incremental Charge - Manual Svc Order vs. Electronic-Disc 1st	Incremental Charge - Manual Svc Order vs. Electronic-Disc Add'l
						Rec	Nonrecurring		Nonrecurring Disconnect		OSS Rates ($)					
							First	Add'l	First	Add'l	SOMEC	SOMAN	SOMAN	SOMAN	SOMAN	SOMAN
	2-Wire ISDN Digital Grade Loop / 2-Wire ISDN Line Side Port Combination - Conversion			UEPPB UEPPR	USACB	0.00	25.22	17.00								
ADDITIONAL NRCs																
	Unbundled Miscellaneous Rate Element, Tag Designed Loop at End User Premise			UEPPB UEPPR	URETN		11.21	1.10								
	Unbundled Miscellaneous Rate Element, Tag Loop at End User Premise			UEPPB UEPPR	URETL		8.33	0.83								
LOCAL NUMBER PORTABILITY																
	Local Number Portability (1 per port)			UEPPB UEPPR	LNPCX	0.35	0.00	0.00								
B-CHANNEL USER PROFILE ACCESS:																
	CVS/CSD (DMS/5ESS)			UEPPB UEPPR	U1UCA	0.00	0.00	0.00								
	CVS (EWSD)			UEPPB UEPPR	U1UCB	0.00	0.00	0.00								
	CSD			UEPPB UEPPR	U1UCC	0.00	0.00	0.00								
B-CHANNEL AREA PLUS USER PROFILE ACCESS: (AL,KY,LA,MS SC,MS, & TN)																
USER TERMINAL PROFILE																
	User Terminal Profile (EWSD only)			UEPPB UEPPR	U1UMA	0.00	0.00	0.00								
VERTICAL FEATURES																
	All Vertical Features - One per Channel B User Profile			UEPPB UEPPR	UEPVF	2.26	0.00	0.00								
INTEROFFICE CHANNEL MILEAGE																
	Interoffice Channel mileage each, including first mile and facilities termination			UEPPB UEPPR	M1GNC	25.3291	47.35	31.78	18.31	7.03						
	Interoffice Channel mileage each, additional mile			UEPPB UEPPR	M1GNM	0.0091	0.00	0.00								
4-WIRE DS1 DIGITAL LOOP WITH 4-WIRE ISDN DS1 DIGITAL TRUNK PORT																
The UNE-P DS1 combination rates below for in this rate exhibit apply to the embedded base in place as of 10/2/03 until 4/1/04. After 4/1/04 these rates shall revert to tariff rates or a separate commercial agreement.																
Requests for 4-Wire DS1 Digital Loop with 4-Wire ISDN DS1 Digital Trunk Port after the effective date of this amendment shall be provided pursuant to a separate agreement or tariff at BellSouth's discretion.																
UNE Port/Loop Combination Rates																
	4W DS1 Digital Loop/4W ISDN DS1 Digital Trunk Port - UNE Zone 1		1	UEPPP		153.48										
	4W DS1 Digital Loop/4W ISDN DS1 Digital Trunk Port - UNE Zone 2		2	UEPPP		183.28										
	4W DS1 Digital Loop/4W ISDN DS1 Digital Trunk Port - UNE Zone 3		3	UEPPP		261.12										
UNE Loop Rates																
	4-Wire DS1 Digital Loop - UNE Zone 1		1	UEPPP	USL4P	70.74										
	4-Wire DS1 Digital Loop - UNE Zone 2		2	UEPPP	USL4P	100.54										
	4-Wire DS1 Digital Loop - UNE Zone 3		3	UEPPP	USL4P	178.38										
UNE Port Rate																
	Exchange Ports - 4-Wire ISDN DS1 Port (E:4/1/2004)			UEPPP	UEPPP	82.74	488.36	276.65								
NONRECURRING CHARGES - CURRENTLY COMBINED																
	4-Wire DS1 Digital Loop / 4-Wire ISDN DS1 Digital Trunk Port Combination - Conversion -Switch-as-is (E:4/1/2004)			UEPPP	USACP	0.00	84.17	61.38								
ADDITIONAL NRCs																
	4-Wire DS1 Loop/4-W ISDN Digtl Trk Port - Subsqt Actvy-Inward/two way Tel Nos. (except NC)			UEPPP	PR7TF		0.5412									
	4-Wire DS1 Loop / 4-Wire ISDN DS1 Digital Trunk Port - Outward Tel Numbers (All States except NC)			UEPPP	PR7TO		12.71	12.71								
	4-Wire DS1 Loop / 4-Wire ISDN DS1 Digital Trk Port - Subsequent Inward Tel Numbers			UEPPP	PR7ZT		25.42	25.42								
LOCAL NUMBER PORTABILITY																
	Local Number Portability (1 per port)			UEPPP	LNPCN	1.75										
INTERFACE (Provsioning Only)																
	Voice/Data			UEPPP	PR71V	0.00	0.00	0.00								
	Digital Data			UEPPP	PR71D	0.00	0.00	0.00								
	Inward Data			UEPPP	PR71E	0.00	0.00	0.00								
New or Additional "B" Channel																
	New or Additional - Voice/Data B Channel			UEPPP	PR7BV	0.00	15.48									
	New or Additional - Digital Data B Channel			UEPPP	PR7BF	0.00	15.48									
	New or Additional Inward Data B Channel			UEPPP	PR7BD	0.00	15.48									
CALL TYPES																

UNBUNDLED NETWORK ELEMENTS - Florida													Attachment: 2		Exhibit: A	
CATEGORY	RATE ELEMENTS	Interim	Zone	BCS	USOC	RATES ($)					Svc Order Submitted Elec per LSR	Svc Order Submitted Manually per LSR	Incremental Charge - Manual Svc Order vs. Electronic-1st	Incremental Charge - Manual Svc Order vs. Electronic-Add'l	Incremental Charge - Manual Svc Order vs. Electronic-Disc 1st	Incremental Charge - Manual Svc Order vs. Electronic-Disc Add'l
						Rec	Nonrecurring		Nonrecurring Disconnect		OSS Rates ($)					
							First	Add'l	First	Add'l	SOMEC	SOMAN	SOMAN	SOMAN	SOMAN	SOMAN
	Inward			UEPPP	PR7C1	0.00	0.00	0.00								
	Outward			UEPPP	PR7CO	0.00	0.00	0.00								
	Two-way			UEPPP	PR7CC	0.00	0.00	0.00								
Interoffice Channel Mileage																
	Fixed Each Including First Mile			UEPPP	1LN1A	88.6256	105.54	98.47	21.47	19.05						
	Each Airline-Fractional Additional Mile			UEPPP	1LN1B	0.1856										
4-WIRE DS1 DIGITAL LOOP WITH 4-WIRE DDITS TRUNK PORT																
The UNE-P DS1 combination rates below for in this rate exhibit apply to the embedded base in place as of 10/2/03 until 4/1/04. After 4/1/04 these rates shall revert to tariff rates or a separate commercial agreement.																
Requests for 4-Wire DS1 Digital Loop with 4-Wire DDITS after the effective date of this amendment shall be provided pursuant to a separate agreement or tariff at BellSouth's discretion.																
UNE Port/Loop Combination Rates																
	4W DS1 Digital Loop/4W DDITS Trunk Port - UNE Zone 1		1	UEPDC		125.69										
	4W DS1 Digital Loop/4W DDITS Trunk Port - UNE Zone 2		2	UEPDC		155.49										
	4W DS1 Digital Loop/4W DDITS Trunk Port - UNE Zone 3		3	UEPDC		233.33										
UNE Loop Rates																
	4-Wire DS1 Digital Loop - UNE Zone 1		1	UEPDC	USLDC	70.74										
	4-Wire DS1 Digital Loop - UNE Zone 2		2	UEPDC	USLDC	100.54										
	4-Wire DS1 Digital Loop - UNE Zone 3		3	UEPDC	USLDC	178.38										
UNE Port Rate																
	4-Wire DDITS Digital Trunk Port (E:4/1/2004)			UEPDC	UDD1T	54.95	464.86	259.23								
NONRECURRING CHARGES - CURRENTLY COMBINED																
	4-Wire DS1 Digital Loop / 4-Wire DDITS Trunk Port Combination - Switch-as-is (E:4/1/2004)			UEPDC	USAC4		95.31	46.71								
	4-Wire DS1 Digital Loop / 4-Wire DDITS Trunk Port Combination - Conversion with DS1 Changes (E:4/1/2004)			UEPDC	USAWA		95.31	46.71								
	4-Wire DS1 Digital Loop / 4-Wire DDITS Trunk Port Combination - Conversion with Change - Trunk (E:4/1/2004)			UEPDC	USAWB		95.31	46.71								
ADDITIONAL NRCs																
	4-Wire DS1 Loop / 4-Wire DDITS Trunk Port - NRC - Subsequent Channel Activation/Chan - 2-Way Trunk			UEPDC	UDTTA		15.69	15.69								
	4-Wire DS1 Loop / 4-Wire DDITS Trunk Port - Subsequent Channel Activation/Chan - 1-Way Outward Trunk			UEPDC	UDTTB		15.69	15.69								
	4-Wire DS1 Loop / 4-Wire DDITS Trunk Port - Subsqnt Channel Activation/Chan Inward Trunk w/out DID			UEPDC	UDTTC		15.69	15.69								
	4-Wire DS1 Loop / 4-Wire DDITS Trunk Port - Subsqnt Chan Activation Per Chan - Inward Trunk with DID			UEPDC	UDTTD		15.69	15.69								
	4-Wire DS1 Loop / 4-Wire DDITS Trunk Port - Subsqnt Chan Activation / Chan - 2-Way DID w User Trans			UEPDC	UDTTE		15.69	15.69								
BIPOLAR 8 ZERO SUBSTITUTION																
	B8ZS -Superframe Format			UEPDC	CCOSF		0.00i	655.00s								
	B8ZS - Extended Superframe Format			UEPDC	CCOEF		0.00i	655.00s								
Alternate Mark Inversion																
	AMI -Superframe Format			UEPDC	MCOSF		0.00	0.00								
	AMI - Extended SuperFrame Format			UEPDC	MCOPO		0.00	0.00								
Telephone Number/Trunk Group Establisment Charges																
	Telephone Number for 2-Way Trunk Group			UEPDC	UDTGX	0.00										
	Telephone Number for 1-Way Outward Trunk Group			UEPDC	UDTGY	0.00										
	Telephone Number for 1-Way Inward Trunk Group Without DID			UEPDC	UDTGZ	0.00										
	DID Numbers, Establish Trunk Group and Provide First Group of 20 DID Numbers			UEPDC	NDZ	0.00	0.00	0.00								
	DID Numbers for each Group of 20 DID Numbers			UEPDC	ND4	0.00										
	DID Numbers, Non- consecutive DID Numbers , Per Number			UEPDC	ND5	0.00										
	Reserve Non-Consecutive DID Nos.			UEPDC	ND6	0.00	0.00	0.00								
	Reserve DID Numbers			UEPDC	NDV	0.00	0.00	0.00								
Dedicated DS1 (Interoffice Channel Mileage) - FX/FCO for 4-Wire DS1 Digital Loop with 4-Wire DDITS Trunk Port																
	Interoffice Channel Mileage - Fixed rate 0-8 miles (Facilities Termination)			UEPDC	1LNO1	88.44	105.54	98.47	21.47	19.05						
	Interoffice Channel Mileage - Additional rate per mile - 0-8 miles			UEPDC	1LNOA	0.1856	0.00	0.00								

CATEGORY	RATE ELEMENTS	Interim	Zone	BCS	USOC	RATES ($) Rec	Nonrecurring First	Nonrecurring Add'l	Nonrecurring Disconnect First	Nonrecurring Disconnect Add'l	Svc Order Submitted Elec per LSR	Svc Order Submitted Manually per LSR	Attachment: 2 Incremental Charge - Manual Svc Order vs. Electronic-1st	Attachment: 2 Incremental Charge - Manual Svc Order vs. Electronic-Add'l	Exhibit: A Incremental Charge - Manual Svc Order vs. Electronic-Disc 1st	Exhibit: A Incremental Charge - Manual Svc Order vs. Electronic-Disc Add'l
											OSS Rates ($)					
											SOMEC	SOMAN	SOMAN	SOMAN	SOMAN	SOMAN
	Interoffice Channel Mileage - Fixed rate 9-25 miles (Facilities Termination)			UEPDC	1LNO2	0.00	0.00	0.00								
	Interoffice Channel Mileage - Additional rate per mile - 9-25 miles			UEPDC	1LNOB	0.1856	0.00	0.00								
	Interoffice Channel Mileage - Fixed rate 25+ miles (Facilities Termination)			UEPDC	1LNO3	0.00	0.00	0.00	0.00							
	Interoffice Channel Mileage - Additional rate per mile - 25+ miles			UEPDC	1LNOC	0.1856	0.00	0.00								
	Local Number Portability, per DS0 Activated			UEPDC	LNPCP	3.15	0.00	0.00	0.00							
	Central Office Termininating Point			UEPDC	CTG	0.00										
	4-WIRE DS1 LOOP WITH CHANNELIZATION WITH PORT															
	System is 1 DS1 Loop, 1 D4 Channel Bank, and up to 24 Feature Activations															
	Each System can have up to 24 combinations of rates depending on type and number of ports used															
	The UNE-P DS1 combination rates below for 4-Wire DS1 Loop with Channelization with Port in this rate exhibit apply to the embedded base in place as of 10/2/03 until 4/1/04. After 4/1/04 these rates shall revert to tariff rates or a separate agreement.															
	Requests for 4-Wire DS1 Loop with Channelization with Port after the effective date of this amendment shall be provided pursuant to a separate agreement or tariff at BellSouth's discretion.															
	UNE DS1 Loop															
	4-Wire DS1 Loop - UNE Zone 1		1	UEPMG	USLDC	70.74	0.00	0.00								
	4-Wire DS1 Loop - UNE Zone 2		2	UEPMG	USLDC	100.54	0.00	0.00								
	4-Wire DS1 Loop - UNE Zone 3		3	UEPMG	USLDC	178.38	0.00	0.00								
	UNE DSO Channelization Capacities (D4 Channel Bank Configurations)															
	24 DSO Channel Capacity - 1 per DS1			UEPMG	VUM24	118.06	0.00	0.00								
	48 DSO Channel Capacity - 1 per 2 DS1s			UEPMG	VUM48	236.12	0.00	0.00								
	96 DSO Channel Capacity -1per 4 DS1s			UEPMG	VUM96	472.24	0.00	0.00								
	144 DS0 Channel Capacity - 1 per 6 DS1s			UEPMG	VUM14	708.36	0.00	0.00								
	192 DS0 Channel Capacity -1 per 8 DS1s			UEPMG	VUM19	944.48	0.00	0.00								
	240 DS0 Channel Capacity - 1 per 10 DS1s			UEPMG	VUM2O	1,180.60	0.00	0.00								
	288 DS0 Channel Capacity - 1 per 12 DS1s			UEPMG	VUM28	1,416.72	0.00	0.00								
	384 DS0 Channel Capacity - 1 per 16 DS1s			UEPMG	VUM38	1,888.96	0.00	0.00								
	480 DS0 Channel Capacity - 1 per 20 DS1s			UEPMG	VUM4O	2,361.20	0.00	0.00								
	576 DS0 Channel Capacity -1 per 24 DS1s			UEPMG	VUM57	2,833.44	0.00	0.00								
	672 DS0 Channel Capacity - 1 per 28 DS1s			UEPMG	VUM67	3,305.68	0.00	0.00								
	Non-Recurring Charges (NRC) Associated with 4-Wire DS1 Loop with Channeliztion with Port - Conversion Charge Based on a System															
	A Minimum System configuration is One (1) DS1, One (1) D4 Channel Bank, and Up To 24 DSO Ports with Feature Activations.															
	Multiples of this configuration functioning as one are considered Add'l after the minimum system configuration is counted.															
	NRC - Conversion (Currently Combined) with or without BellSouth Allowed Changes			UEPMG	USAC4	0.00	96.77	4.24								
	System Additions at End User Locations Where 4-Wire DS1 Loop with Channelization with Port Combination Currently Exists and															
	New (Not Currently Combined) in all states, except in Density Zone 1 of Top 8 MSA's															
	1 DS1/D4 Channel Bank - Additionally Add NRC for each Port and Assoc Fea Activation (E:4/1/2004)			UEPMG	VUMD4	0.00	726.11	468.21	145.32	17.24						
	Bipolar 8 Zero Substitution															
	Clear Channel Capability Format, superframe - Subsequent Activity Only			UEPMG	CCOSF	0.00	0.00i	655.00s								
	Clear Channel Capability Format - Extended Superframe - Subsequent Activity Only			UEPMG	CCOEF	0.00	0.00i	655.00s								
	Alternate Mark Inversion (AMI)															
	Superframe Format			UEPMG	MCOSF	0.00	0.00	0.00								
	Extended Superframe Format			UEPMG	MCOPO	0.00	0.00	0.00								
	Exchange Ports Associated with 4-Wire DS1 Loop with Channelization with Port															
	Exchange Ports															
	Line Side Combination Channelized PBX Trunk Port - Business (E:4/1/2004)			UEPPX	UEPCX	1.40	0.00	0.00	0.00	0.00						
	Line Side Outward Channelized PBX Trunk Port - Business (E:4/1/2004)			UEPPX	UEPOX	1.40	0.00	0.00	0.00	0.00						
	Line Side Inward Only Channelized PBX Trunk Port without DID (E:4/1/2004)			UEPPX	UEP1X	1.40	0.00	0.00	0.00	0.00						
	2-Wire Trunk Side Unbundled Channelized DID Trunk Port (E:4/1/2004)			UEPPX	UEPDM	8.71	0.00	0.00	0.00	0.00						
	Feature Activations - Unbundled Loop Concentration															

CATEGORY	RATE ELEMENTS	Interim	Zone	BCS	USOC	RATES ($)					Svc Order Submitted Elec per LSR	Svc Order Submitted Manually per LSR	Incremental Charge - Manual Svc Order vs. Electronic-1st	Incremental Charge - Manual Svc Order vs. Electronic-Add'l	Incremental Charge - Manual Svc Order vs. Electronic-Disc 1st	Incremental Charge - Manual Svc Order vs. Electronic-Disc Add'l
						Rec	Nonrecurring		Nonrecurring Disconnect		OSS Rates ($)					
							First	Add'l	First	Add'l	SOMEC	SOMAN	SOMAN	SOMAN	SOMAN	SOMAN
	Feature (Service) Activation for each Line Port Terminated in D4 Bank			UEPPX	1PQWM	0.6402	25.40	13.41	3.96	3.93						
	Feature (Service) Activation for each Trunk Port Terminated in D4 Bank			UEPPX	1PQWU	0.6402	78.16	18.42	56.03	10.95						
	Telephone Number/ Group Establishment Charges for DID Service															
	DID Trunk Termination (1 per Port)			UEPPX	NDT	0.00	0.00	0.00								
	Estab Trk Grp and Provide 1st 20 DID Nos. (FL,GA, NC,& SC)			UEPPX	NDZ	0.00	0.00	0.00								
	DID Numbers - groups of 20 - Valid all States			UEPPX	ND4	0.00	0.00	0.00								
	Non-Consecutive DID Numbers - per number			UEPPX	ND5	0.00	0.00	0.00								
	Reserve Non-Consecutive DID Numbers			UEPPX	ND6	0.00	0.00	0.00								
	Reserve DID Numbers			UEPPX	NDV	0.00	0.00	0.00								
	Local Number Portability															
	Local Number Portability - 1 per port			UEPPX	LNPCP	3.15	0.00	0.00								
	FEATURES - Vertical and Optional															
	Local Switching Features Offered with Line Side Ports Only															
	All Features Available			UEPPX	UEPVF	2.26	0.00	0.00								
UNBUNDLED CENTREX PORT/LOOP COMBINATIONS - COST BASED RATES																
	1. Cost Based Rates are applied where BellSouth is required by FCC and/or State Commission rule to provide Unbundled Local Switching or Switch Ports.															
	2. Features shall apply to the Unbundled Port/Loop Combination - Cost Based Rate section in the same manner as they are applied to the Stand-Alone Unbundled Port section of this Rate Exhibit.															
	3. End Office and Tandem Switching Usage and Common Transport Usage rates in the Port section of this rate exhibit shall apply to all combinations of loop/port network elements except for UNE Coin Port/Loop Combinations.															
	4. The first and additional Port nonrecurring charges apply to Not Currently Combined Combos. For Currently Combined Combos, the nonrecurring charges shall be those identified in the Nonrecurring - Currently Combined sections. Additional NRCs may apply also and are categorized accordingly.															
	5. Market Rates for Unbundled Centrex Port/Loop Combination will be negotiated on an Individual Case Basis, until further notice.															
	UNE-P CENTREX - 1AESS - (Valid in AL,FL,GA,KY,LA,MS,&TN only)															
	2-Wire VG Loop/2-Wire Voice Grade Port (Centrex) Combo															
	UNE Port/Loop Combination Rates (Non-Design)															
	2-Wire VG Loop/2-Wire Voice Grade Port (Centrex) Port Combo - Non-Design		1	UEP91		10.94										
	2-Wire VG Loop/2-Wire Voice Grade Port (Centrex)Port Combo - Non-Design		2	UEP91		15.05										
	2-Wire VG Loop/2-Wire Voice Grade Port (Centrex)Port Combo - Non-Design		3	UEP91		25.80										
	UNE Port/Loop Combination Rates (Design)															
	2-Wire VG Loop/2-Wire Voice Grade Port (Centrex) Port Combo - Design		1	UEP91		13.41										
	2-Wire VG Loop/2-Wire Voice Grade Port (Centrex)Port Combo - Design		2	UEP91		18.57										
	2-Wire VG Loop/2-Wire Voice Grade Port (Centrex)Port Combo - Design		3	UEP91		32.04										
	UNE Loop Rate															
	2-Wire Voice Grade Loop (SL 1) - Zone 1		1	UEP91	UECS1	9.77										
	2-Wire Voice Grade Loop (SL 1) - Zone 2		2	UEP91	UECS1	13.88										
	2-Wire Voice Grade Loop (SL 1) - Zone 3		3	UEP91	UECS1	24.63										
	2-Wire Voice Grade Loop (SL 2) - Zone 1		1	UEP91	UECS2	12.24										
	2-Wire Voice Grade Loop (SL 2) - Zone 2		2	UEP91	UECS2	17.40										
	2-Wire Voice Grade Loop (SL 2) - Zone 3		3	UEP91	UECS2	30.87										
	UNE Ports															
	All States (Except North Carolina and Sout Carolina)															
	2-Wire Voice Grade Port (Centrex) Basic Local Area			UEP91	UEPYA	1.17	53.31	26.46	27.50	8.37						
	2-Wire Voice Grade Port (Centrex 800 termination)Basic Local Area			UEP91	UEPYB	1.17	53.31	26.46	27.50	8.37						
	2-Wire Voice Grade Port (Centrex with Caller ID)Note1 Basic Local Area			UEP91	UEPYH	1.17	53.31	26.46	27.50	8.37						
	2-Wire Voice Grade Port (Centrex from diff Serving Wire Center) Note 2, 3 Basic Local Area			UEP91	UEPYM	1.17	139.49	86.10	65.41	13.81						
	2-Wire Voice Grade Port, Diff Serving Wire Center - 800 Service Term - Basic Local Area			UEP91	UEPYZ	1.17	139.49	86.10	65.41	13.81						
	2-Wire Voice Grade Port terminated in on Megalink or equivalent - Basic Local Area			UEP91	UEPY9	1.17	53.31	26.46	27.50	8.37						

UNBUNDLED NETWORK ELEMENTS - Florida														Attachment: 2		Exhibit: A	
CATEGORY		RATE ELEMENTS	Interim	Zone	BCS	USOC	RATES ($)					Svc Order Submitted Elec per LSR	Svc Order Submitted Manually per LSR	Incremental Charge - Manual Svc Order vs. Electronic-1st	Incremental Charge - Manual Svc Order vs. Electronic-Add'l	Incremental Charge - Manual Svc Order vs. Electronic-Disc 1st	Incremental Charge - Manual Svc Order vs. Electronic-Disc Add'l
							Rec	Nonrecurring		Nonrecurring Disconnect		OSS Rates ($)					
								First	Add'l	First	Add'l	SOMEC	SOMAN	SOMAN	SOMAN	SOMAN	SOMAN
		2-Wire Voice Grade Port Terminated on 800 Service Term - Basic Local Area			UEP91	UEPY2	1.17	53.31	26.46	27.50	8.37						
	Georgia and Florida Only																
		2-Wire Voice Grade Port (Centrex)			UEP91	UEPHA	1.17	53.31	26.46	27.50	8.37						
		2-Wire Voice Grade Port (Centrex 800 termination)			UEP91	UEPHB	1.17	53.31	26.46	27.50	8.37						
		2-Wire Voice Grade Port (Centrex with Caller ID)1			UEP91	UEPHH	1.17	53.31	26.46	27.50	8.37						
		2-Wire Voice Grade Port (Centrex from diff Serving Wire Center)2,3			UEP91	UEPHM	1.17	139.49	86.10	65.41	13.81						
		2-Wire Voice Grade Port, Diff Serving Wire Center 2,3 - 800 Service Term			UEP91	UEPHZ	1.17	139.49	86.10	65.41	13.81						
		2-Wire Voice Grade Port terminated in on Megalink or equivalent			UEP91	UEPH9	1.17	53.31	26.46	27.50	8.37						
		2-Wire Voice Grade Port Terminated on 800 Service Term			UEP91	UEPH2	1.17	53.31	26.46	27.50	8.37						
	Local Switching																
		Centrex Intercom Funtionality, per port			UEP91	URECS	0.7384										
	Local Number Portability																
		Local Number Portability (1 per port)			UEP91	LNPCC	0.35										
	Features																
		All Standard Features Offered, per port			UEP91	UEPVF	2.26										
		All Select Features Offered, per port			UEP91	UEPVS	0.00	370.70									
		All Centrex Control Features Offered, per port			UEP91	UEPVC	2.26										
	NARS																
		Unbundled Network Access Register - Combination			UEP91	UARCX	0.00	0.00	0.00	0.00	0.00						
		Unbundled Network Access Register - Indial			UEP91	UAR1X	0.00	0.00	0.00	0.00	0.00						
		Unbundled Network Access Register - Outdial			UEP91	UAROX	0.00	0.00	0.00	0.00	0.00						
	Miscellaneous Terminations																
	2-Wire Trunk Side																
		Trunk Side Terminations, each			UEP91	CENA6	8.73										
	Interoffice Channel Mileage - 2-Wire																
		Interoffice Channel Facilities Termination - Voice Grade			UEP91	M1GBC	25.32										
		Interoffice Channel mileage, per mile or fraction of mile			UEP91	M1GBM	0.0091										
	Feature Activations (DS0) Centrex Loops on Channelized DS1 Service																
	D4 Channel Bank Feature Activations																
		Feature Activation on D-4 Channel Bank Centrex Loop Slot			UEP91	1PQWS	0.66										
		Feature Activation on D-4 Channel Bank FX line Side Loop Slot			UEP91	1PQW6	0.66										
		Feature Activation on D-4 Channel Bank FX Trunk Side Loop Slot			UEP91	1PQW7	0.66										
		Feature Activation on D-4 Channel Bank Centrex Loop Slot - Different Wire Center			UEP91	1PQWP	0.66										
		Feature Activation on D-4 Channel Bank Private Line Loop Slot			UEP91	1PQWV	0.66										
		Feature Activation on D-4 Channel Bank Tjie Line/Trunk Loop Slot			UEP91	1PQWQ	0.66										
		Feature Activation on D-4 Channel Bank WATS Loop Slot			UEP91	1PQWA	0.66										
	Non-Recurring Charges (NRC) Associated with UNE-P Centrex																
		Conversion - Currently Combined Switch-As-Is with allowed changes, per port			UEP91	USAC2		21.50	8.42								
		Conversion of Existing Centrex Common Block			UEP91	USACN		5.17	8.32								
		New Centrex Standard Common Block			UEP91	M1ACS	0.00	618.82									
		New Centrex Customized Common Block			UEP91	M1ACC	0.00	618.82									
		Secondary Block, per Block			UEP91	M2CC1	0.00	71.31									
		NAR Establishment Charge, Per Occasion			UEP91	URECA	0.00	66.48									
	UNE-P CENTREX - 5ESS (Valid in All States)																
	2-Wire VG Loop/2-Wire Voice Grade Port (Centrex) Combo																
	UNE Port/Loop Combination Rates (Non-Design)																
		2-Wire VG Loop/2-Wire Voice Grade Port (Centrex) Port Combo - Non-Design		1	UEP95		10.94										

UNBUNDLED NETWORK ELEMENTS - Florida														Attachment: 2		Exhibit: A	
CATEGORY		RATE ELEMENTS	Interim	Zone	BCS	USOC	RATES ($)					Svc Order Submitted Elec per LSR	Svc Order Submitted Manually per LSR	Incremental Charge - Manual Svc Order vs. Electronic-1st	Incremental Charge - Manual Svc Order vs. Electronic-Add'l	Incremental Charge - Manual Svc Order vs. Electronic-Disc 1st	Incremental Charge - Manual Svc Order vs. Electronic-Disc Add'l
							Rec	Nonrecurring		Nonrecurring Disconnect		OSS Rates ($)					
								First	Add'l	First	Add'l	SOMEC	SOMAN	SOMAN	SOMAN	SOMAN	SOMAN
		2-Wire VG Loop/2-Wire Voice Grade Port (Centrex)Port Combo - Non-Design		2	UEP95		15.05										
		2-Wire VG Loop/2-Wire Voice Grade Port (Centrex)Port Combo - Non-Design		3	UEP95		25.80										
	UNE Port/Loop Combination Rates (Design)																
		2-Wire VG Loop/2-Wire Voice Grade Port (Centrex) Port Combo - Design		1	UEP95		13.41										
		2-Wire VG Loop/2-Wire Voice Grade Port (Centrex)Port Combo - Design		2	UEP95		18.57										
		2-Wire VG Loop/2-Wire Voice Grade Port (Centrex)Port Combo - Design		3	UEP95		32.04										
	UNE Loop Rate																
		2-Wire Voice Grade Loop (SL 1) - Zone 1		1	UEP95	UECS1	9.77										
		2-Wire Voice Grade Loop (SL 1) - Zone 2		2	UEP95	UECS1	13.88										
		2-Wire Voice Grade Loop (SL 1) - Zone 3		3	UEP95	UECS1	24.63										
		2-Wire Voice Grade Loop (SL 2) - Zone 1		1	UEP95	UECS2	12.24										
		2-Wire Voice Grade Loop (SL 2) - Zone 2		2	UEP95	UECS2	17.40										
		2-Wire Voice Grade Loop (SL 2) - Zone 3		3	UEP95	UECS2	30.87										
	UNE Port Rate																
	All States																
		2-Wire Voice Grade Port (Centrex) Basic Local Area			UEP95	UEPYA	1.17	53.31	26.46	27.50	8.37						
		2-Wire Voice Grade Port (Centrex 800 termination)			UEP95	UEPYB	1.17	53.31	26.46	27.50	8.37						
		2-Wire Voice Grade Port (Centrex with Caller ID)1Basic Local Area			UEP95	UEPYH	1.17	53.31	26.46	27.50	8.37						
		2-Wire Voice Grade Port (Centrex from diff Serving Wire Center)2,3 Basic Local Area			UEP95	UEPYM	1.17	139.49	86.10	65.41	13.81						
		2-Wire Voice Grade Port, Diff Serving Wire Center 2,3 - 800 Service Term - Basic Local Area			UEP95	UEPYZ	1.17	139.49	86.10	65.41	13.81						
		2-Wire Voice Grade Port terminated in on Megalink or equivalent - Basic Local Area			UEP95	UEPY9	1.17	53.31	26.46	27.50	8.37						
		2-Wire Voice Grade Port Terminated on 800 Service Term - Basic Local Area			UEP95	UEPY2	1.17	53.31	26.46	27.50	8.37						
	AL, KY, LA, MS, SC, & TN Only																
	FL & GA Only																
		2-Wire Voice Grade Port (Centrex)			UEP95	UEPHA	1.17	53.31	26.46	27.50	8.37						
		2-Wire Voice Grade Port (Centrex 800 termination)			UEP95	UEPHB	1.17	53.31	26.46	27.50	8.37						
		2-Wire Voice Grade Port (Centrex with Caller ID)1			UEP95	UEPHH	1.17	53.31	26.46	27.50	8.37						
		2-Wire Voice Grade Port (Centrex from diff Serving Wire Center)2,3			UEP95	UEPHM	1.17	139.49	86.10	65.41	13.81						
		2-Wire Voice Grade Port, Diff Serving Wire Center - 800 Service Term 2,3			UEP95	UEPHZ	1.17	139.49	86.10	65.41	13.81						
		2-Wire Voice Grade Port terminated in on Megalink or equivalent			UEP95	UEPH9	1.17	53.31	26.46	27.50	8.37						
		2-Wire Voice Grade Port Terminated on 800 Service Term			UEP95	UEPH2	1.17	53.31	26.46	27.50	8.37						
	Local Switching																
		Centrex Intercom Funtionality, per port			UEP95	URECS	0.7384										
	Local Number Portability																
		Local Number Portability (1 per port)			UEP95	LNPCC	0.35										
	Features																
		All Standard Features Offered, per port			UEP95	UEPVF	2.26										
		All Select Features Offered, per port			UEP95	UEPVS	0.00	370.70									
		All Centrex Control Features Offered, per port			UEP95	UEPVC	2.26										
	NARS																
		Unbundled Network Access Register - Combination			UEP95	UARCX	0.00	0.00	0.00	0.00	0.00						
		Unbundled Network Access Register - Indial			UEP95	UAR1X	0.00	0.00	0.00	0.00	0.00						
		Unbundled Network Access Register - Outdial			UEP95	UAROX	0.00	0.00	0.00	0.00	0.00						
	Miscellaneous Terminations																
	2-Wire Trunk Side																
		Trunk Side Terminations, each			UEP95	CEND6	8.73										

UNBUNDLED NETWORK ELEMENTS - Florida														Attachment: 2		Exhibit: A	
CATEGORY		RATE ELEMENTS	Interim	Zone	BCS	USOC	RATES ($)					Svc Order Submitted Elec per LSR	Svc Order Submitted Manually per LSR	Incremental Charge - Manual Svc Order vs. Electronic-1st	Incremental Charge - Manual Svc Order vs. Electronic-Add'l	Incremental Charge - Manual Svc Order vs. Electronic-Disc 1st	Incremental Charge - Manual Svc Order vs. Electronic-Disc Add'l
							Rec	Nonrecurring		Nonrecurring Disconnect		OSS Rates ($)					
								First	Add'l	First	Add'l	SOMEC	SOMAN	SOMAN	SOMAN	SOMAN	SOMAN
	4-Wire Digital (1.544 Megabits)																
		DS1 Circuit Terminations, each			UEP95	M1HD1	54.95										
		DS0 Channels Activated, each			UEP95	M1HDO	0.00	15.69									
	Interoffice Channel Mileage - 2-Wire																
		Interoffice Channel Facilities Termination			UEP95	M1GBC	25.32										
		Interoffice Channel mileage, per mile or fraction of mile			UEP95	M1GBM	0.0091										
	Feature Activations (DS0) Centrex Loops on Channelized DS1 Service																
	D4 Channel Bank Feature Activations																
		Feature Activation on D-4 Channel Bank Centrex Loop Slot			UEP95	1PQWS	0.66										
		Feature Activation on D-4 Channel Bank FX line Side Loop Slot			UEP95	1PQW6	0.66										
		Feature Activation on D-4 Channel Bank FX Trunk Side Loop Slot			UEP95	1PQW7	0.66										
		Feature Activation on D-4 Channel Bank Centrex Loop Slot - Different Wire Center			UEP95	1PQWP	0.66										
		Feature Activation on D-4 Channel Bank Private Line Loop Slot			UEP95	1PQWV	0.66										
		Feature Activation on D-4 Channel Bank Tjie Line/Trunk Loop Slot			UEP95	1PQWQ	0.66										
		Feature Activation on D-4 Channel Bank WATS Loop Slot			UEP95	1PQWA	0.66										
	Non-Recurring Charges (NRC) Associated with UNE-P Centrex																
		NRC Conversion Currently Combined Switch-As-Is with allowed changes, per port			UEP95	USAC2	0.00	21.50	8.42								
		Conversion of Existing Centrex Common Block, each			UEP95	USACN		5.17	8.32								
		New Centrex Standard Common Block			UEP95	M1ACS	0.00	618.82									
		New Centrex Customized Common Block			UEP95	M1ACC	0.00	618.82									
		NAR Establishment Charge, Per Occasion			UEP95	URECA	0.00	66.48									
	Additional Non-Recurring Charges (NRC)																
		Unbundled Miscellaneous Rate Element, Tag Loop at End Use Premise			UEP95	URETL		8.33	0.83								
		Unbundled Miscellaneous Rate Element, Tag Design Loop at End Use Premise			UEP95	URETN		11.21	1.10								
	UNE-P CENTREX - DMS100 (Valid in All States)																
	2-Wire VG Loop/2-Wire Voice Grade Port (Centrex) Combo																
	UNE Port/Loop Combination Rates (Non-Design)																
		2-Wire VG Loop/2-Wire Voice Grade Port (Centrex) Port Combo - Non-Design		1	UEP9D		10.94										
		2-Wire VG Loop/2-Wire Voice Grade Port (Centrex)Port Combo - Non-Design		2	UEP9D		15.05										
		2-Wire VG Loop/2-Wire Voice Grade Port (Centrex)Port Combo - Non-Design		3	UEP9D		25.80										
	UNE Port/Loop Combination Rates (Design)																
		2-Wire VG Loop/2-Wire Voice Grade Port (Centrex) Port Combo - Design		1	UEP9D		13.41										
		2-Wire VG Loop/2-Wire Voice Grade Port (Centrex)Port Combo - Design		2	UEP9D		18.57										
		2-Wire VG Loop/2-Wire Voice Grade Port (Centrex)Port Combo - Design		3	UEP9D		32.04										
	UNE Loop Rate																
		2-Wire Voice Grade Loop (SL 1) - Zone 1		1	UEP9D	UECS1	9.77										
		2-Wire Voice Grade Loop (SL 1) - Zone 2		2	UEP9D	UECS1	13.88										
		2-Wire Voice Grade Loop (SL 1) - Zone 3		3	UEP9D	UECS1	24.63										
		2-Wire Voice Grade Loop (SL 2) - Zone 1		1	UEP9D	UECS2	12.24										
		2-Wire Voice Grade Loop (SL 2) - Zone 2		2	UEP9D	UECS2	17.40										
		2-Wire Voice Grade Loop (SL 2) - Zone 3		3	UEP9D	UECS2	30.87										
	UNE Port Rate																
	ALL STATES																
		2-Wire Voice Grade Port (Centrex) Basic Local Area			UEP9D	UEPYA	1.17										

CATEGORY		RATE ELEMENTS	Interim	Zone	BCS	USOC	RATES ($)					Svc Order Submitted Elec per LSR	Svc Order Submitted Manually per LSR	Attachment: 2 Incremental Charge - Manual Svc Order vs. Electronic-1st	Attachment: 2 Incremental Charge - Manual Svc Order vs. Electronic-Add'l	Exhibit: A Incremental Charge - Manual Svc Order vs. Electronic-Disc 1st	Exhibit: A Incremental Charge - Manual Svc Order vs. Electronic-Disc Add'l
							Rec	Nonrecurring		Nonrecurring Disconnect		OSS Rates ($)					
								First	Add'l	First	Add'l	SOMEC	SOMAN	SOMAN	SOMAN	SOMAN	SOMAN
		2-Wire Voice Grade Port (Centrex 800 termination)Basic Local Area			UEP9D	UEPYB	1.17	53.31	26.46	27.50	8.37						
		2-Wire Voice Grade Port (Centrex / EBS-PSET)3Basic Local Area			UEP9D	UEPYC	1.17	53.31	26.46	27.50	8.37						
		2-Wire Voice Grade Port (Centrex / EBS-M5009)3Basic Local Area			UEP9D	UEPYD	1.17	53.31	26.46	27.50	8.37						
		2-Wire Voice Grade Port (Centrex / EBS-M5209))3 Basic Local Area			UEP9D	UEPYE	1.17	53.31	26.46	27.50	8.37						
		2-Wire Voice Grade Port (Centrex / EBS-M5112))3 Basic Local Area			UEP9D	UEPYF	1.17	53.31	26.46	27.50	8.37						
		2-Wire Voice Grade Port (Centrex / EBS-M5312))3Basic Local Area			UEP9D	UEPYG	1.17	53.31	26.46	27.50	8.37						
		2-Wire Voice Grade Port (Centrex / EBS-M5008))3 Basic Local Area			UEP9D	UEPYT	1.17	53.31	26.46	27.50	8.37						
		2-Wire Voice Grade Port (Centrex / EBS-M5208))3 Basic Local Area			UEP9D	UEPYU	1.17	53.31	26.46	27.50	8.37						
		2-Wire Voice Grade Port (Centrex / EBS-M5216))3 Basic Local Area			UEP9D	UEPYV	1.17	53.31	26.46	27.50	8.37						
		2-Wire Voice Grade Port (Centrex / EBS-M5316))3 Basic Local Area			UEP9D	UEPY3	1.17	53.31	26.46	27.50	8.37						
		2-Wire Voice Grade Port (Centrex with Caller ID) Basic Local Area			UEP9D	UEPYH	1.17	53.31	26.46	27.50	8.37						
		2-Wire Voice Grade Port (Centrex/Caller ID/Msg Wtg Lamp Indication))4 Basic Local Area			UEP9D	UEPYW	1.17	53.31	26.46	27.50	8.37						
		2-Wire Voice Grade Port (Centrex/Msg Wtg Lamp Indication))4 Basic Local Area			UEP9D	UEPYJ	1.17	53.31	26.46	27.50	8.37						
		2-Wire Voice Grade Port (Centrex from diff Serving Wire Center) 2,3-Basic Local Area			UEP9D	UEPYM	1.17	53.31	26.46	27.50	8.37						
		2-Wire Voice Grade Port (Centrex/differ SWC /EBS-PSET)2,3,4 Basic Local Area			UEP9D	UEPYO	1.17	53.31	26.46	27.50	8.37						
		2-Wire Voice Grade Port (Centrex/differ SWC /EBS-M5009)2,3,4 Basic Local Area			UEP9D	UEPYP	1.17	53.31	26.46	27.50	8.37						
		2-Wire Voice Grade Port (Centrex/differ SWC /EBS-5209)2,3,4 Basic Local Area			UEP9D	UEPYQ	1.17	139.49	86.10	65.41	13.81						
		2-Wire Voice Grade Port (Centrex/differ SWC /EBS-M5112)2,3,4 Basic Local Area			UEP9D	UEPYR	1.17	139.49	86.10	65.41	13.81						
		2-Wire Voice Grade Port (Centrex/differ SWC /EBS-M5312)2,3,4 Basic Local Area			UEP9D	UEPYS	1.17	139.49	86.10	65.41	13.81						
		2-Wire Voice Grade Port (Centrex/differ SWC /EBS-M5008)2,3,4 Basic Local Area			UEP9D	UEPY4	1.17	139.49	86.10	65.41	13.81						
		2-Wire Voice Grade Port (Centrex/differ SWC /EBS-M5208)2, 3 Basic Local Area			UEP9D	UEPY5	1.17	139.49	86.10	65.41	13.81						
		2-Wire Voice Grade Port (Centrex/differ SWC /EBS-M5216)2,3,4 Basic Local Area			UEP9D	UEPY6	1.17	139.49	86.10	65.41	13.81						
		2-Wire Voice Grade Port (Centrex/differ SWC /EBS-M5316)2,3,4 Basic Local Area			UEP9D	UEPY7	1.17	139.49	86.10	65.41	13.81						
		2-Wire Voice Grade Port, Diff Serving Wire Center - 800 Service Term 2,3			UEP9D	UEPYZ	1.17	139.49	86.10	65.41	13.81						
		2-Wire Voice Grade Port terminated in on Megalink or equivalent Basic Local Area			UEP9D	UEPY9	1.17	53.31	26.46	27.50	8.37						
		2-Wire Voice Grade Port Terminated on 800 Service Term Basic Local Area			UEP9D	UEPY2	1.17	53.31	26.46	27.50	8.37						
	FL & GA Only																
		2-Wire Voice Grade Port (Centrex)			UEP9D	UEPHA	1.17	53.31	26.46	27.50	8.37						
		2-Wire Voice Grade Port (Centrex 800 termination)			UEP9D	UEPHB	1.17	53.31	26.46	27.50	8.37						
		2-Wire Voice Grade Port (Centrex / EBS-PSET)4			UEP9D	UEPHC	1.17	53.31	26.46	27.50	8.37						
		2-Wire Voice Grade Port (Centrex / EBS-M5009)4			UEP9D	UEPHD	1.17	53.31	26.46	27.50	8.37						
		2-Wire Voice Grade Port (Centrex / EBS-M5209)4			UEP9D	UEPHE	1.17	53.31	26.46	27.50	8.37						
		2-Wire Voice Grade Port (Centrex / EBS-M5112)4			UEP9D	UEPHF	1.17	53.31	26.46	27.50	8.37						

UNBUNDLED NETWORK ELEMENTS - Florida														Attachment: 2		Exhibit: A	
CATEGORY		RATE ELEMENTS	Interim	Zone	BCS	USOC	RATES ($)					Svc Order Submitted Elec per LSR	Svc Order Submitted Manually per LSR	Incremental Charge - Manual Svc Order vs. Electronic-1st	Incremental Charge - Manual Svc Order vs. Electronic-Add'l	Incremental Charge - Manual Svc Order vs. Electronic-Disc 1st	Incremental Charge - Manual Svc Order vs. Electronic-Disc Add'l
							Rec	Nonrecurring		Nonrecurring Disconnect		OSS Rates ($)					
								First	Add'l	First	Add'l	SOMEC	SOMAN	SOMAN	SOMAN	SOMAN	SOMAN
		2-Wire Voice Grade Port (Centrex / EBS-M5312)4			UEP9D	UEPHG	1.17	53.31	26.46	27.50	8.37						
		2-Wire Voice Grade Port (Centrex / EBS-M5008)4			UEP9D	UEPHT	1.17	53.31	26.46	27.50	8.37						
		2-Wire Voice Grade Port (Centrex / EBS-M5208)4			UEP9D	UEPHU	1.17	53.31	26.46	27.50	8.37						
		2-Wire Voice Grade Port (Centrex / EBS-M5216)4			UEP9D	UEPHV	1.17	53.31	26.46	27.50	8.37						
		2-Wire Voice Grade Port (Centrex / EBS-M5316)4			UEP9D	UEPH3	1.17	53.31	26.46	27.50	8.37						
		2-Wire Voice Grade Port (Centrex with Caller ID)			UEP9D	UEPHH	1.17	53.31	26.46	27.50	8.37						
		2-Wire Voice Grade Port (Centrex/Caller ID/Msg Wtg Lamp Indication)4			UEP9D	UEPHW	1.17	53.31	26.46	27.50	8.37						
		2-Wire Voice Grade Port (Centrex/Msg Wtg Lamp Indication)4			UEP9D	UEPHJ	1.17	53.31	26.46	27.50	8.37						
		2-Wire Voice Grade Port (Centrex from diff Serving Wire Center) 2,3			UEP9D	UEPHM	1.17	139.49	86.10	65.41	13.81						
		2-Wire Voice Grade Port (Centrex/differ SWC /EBS-PSET)2,3,4			UEP9D	UEPHO	1.17	139.49	86.10	65.41	13.81						
		2-Wire Voice Grade Port (Centrex/differ SWC /EBS-M5009)2,3,4			UEP9D	UEPHP	1.17	139.49	86.10	65.41	13.81						
		2-Wire Voice Grade Port (Centrex/differ SWC /EBS-5209)2,3,4			UEP9D	UEPHQ	1.17	139.49	86.10	65.41	13.81						
		2-Wire Voice Grade Port (Centrex/differ SWC /EBS-M5112)2,3,4			UEP9D	UEPHR	1.17	139.49	86.10	65.41	13.81						
		2-Wire Voice Grade Port (Centrex/differ SWC /EBS-M5312)2, 3,4			UEP9D	UEPHS	1.17	139.49	86.10	65.41	13.81						
		2-Wire Voice Grade Port (Centrex/differ SWC /EBS-M5008)2,3,4			UEP9D	UEPH4	1.17	139.49	86.10	65.41	13.81						
		2-Wire Voice Grade Port (Centrex/differ SWC /EBS-M5208)2,3,4			UEP9D	UEPH5	1.17	139.49	86.10	65.41	13.81						
		2-Wire Voice Grade Port (Centrex/differ SWC /EBS-M5216)2,3,4			UEP9D	UEPH6	1.17	139.49	86.10	65.41	13.81						
		2-Wire Voice Grade Port (Centrex/differ SWC /EBS-M5316)2,3,4			UEP9D	UEPH7	1.17	139.49	86.10	65.41	13.81						
		2-Wire Voice Grade Port, Diff Serving Wire Center - 800 Service Term 2,3			UEP9D	UEPHZ	1.17	139.49	86.10	65.41	13.81						
		2-Wire Voice Grade Port terminated in on Megalink or equivalent			UEP9D	UEPH9	1.17	53.31	26.46	27.50	8.37						
		2-Wire Voice Grade Port Terminated on 800 Service Term			UEP9D	UEPH2	1.17	53.31	26.46	27.50	8.37						
	Local Switching																
		Centrex Intercom Funtionality, per port			UEP9D	URECS	0.7384										
	Local Number Portability																
		Local Number Portability (1 per port)			UEP9D	LNPCC	0.35										
	Features																
		All Standard Features Offered, per port			UEP9D	UEPVF	2.26										
		All Select Features Offered, per port			UEP9D	UEPVS	0.00	370.70									
		All Centrex Control Features Offered, per port			UEP9D	UEPVC	2.26										
	NARS																
		Unbundled Network Access Register - Combination			UEP9D	UARCX	0.00	0.00	0.00	0.00	0.00						
		Unbundled Network Access Register - Inward			UEP9D	UAR1X	0.00	0.00	0.00	0.00	0.00						
		Unbundled Network Access Register - Outdial			UEP9D	UAROX	0.00	0.00	0.00	0.00	0.00						
	Miscellaneous Terminations																
	2-Wire Trunk Side																
		Trunk Side Terminations, each			UEP9D	CEND6	8.73										
	4-Wire Digital (1.544 Megabits)																
		DS1 Circuit Terminations, each			UEP9D	M1HD1	54.95										
		DS0 Channels Activiated per Channel			UEP9D	M1HDO	0.00	15.69									
	Interoffice Channel Mileage - 2-Wire																
		Interoffice Channel Facilities Termination			UEP9D	M1GBC	25.32										
		Interoffice Channel mileage, per mile or fraction of mile			UEP9D	M1GBM	0.0091										
	Feature Activations (DS0) Centrex Loops on Channelized DS1 Service																
	D4 Channel Bank Feature Activations																
		Feature Activation on D-4 Channel Bank Centrex Loop Slot			UEP9D	1PQWS	0.66										

CATEGORY	RATE ELEMENTS	Interim	Zone	BCS	USOC	RATES ($)					Svc Order Submitted Elec per LSR	Svc Order Submitted Manually per LSR	Attachment: 2 Incremental Charge - Manual Svc Order vs. Electronic-1st	Attachment: 2 Incremental Charge - Manual Svc Order vs. Electronic-Add'l	Exhibit: A Incremental Charge - Manual Svc Order vs. Electronic-Disc 1st	Exhibit: A Incremental Charge - Manual Svc Order vs. Electronic-Disc Add'l
						Rec	Nonrecurring		Nonrecurring Disconnect		OSS Rates ($)					
							First	Add'l	First	Add'l	SOMEC	SOMAN	SOMAN	SOMAN	SOMAN	SOMAN
	Feature Activation on D-4 Channel Bank FX line Side Loop Slot			UEP9D	1PQW6	0.66										
	Feature Activation on D-4 Channel Bank FX Trunk Side Loop Slot			UEP9D	1PQW7	0.66										
	Feature Activation on D-4 Channel Bank Centrex Loop Slot - Different Wire Center			UEP9D	1PQWP	0.66										
	Feature Activation on D-4 Channel Bank Private Line Loop Slot			UEP9D	1PQWV	0.66										
	Feature Activation on D-4 Channel Bank Tjie Line/Trunk Loop Slot			UEP9D	1PQWQ	0.66										
	Feature Activation on D-4 Channel Bank WATS Loop Slot			UEP9D	1PQWA	0.66										
Non-Recurring Charges (NRC) Associated with UNE-P Centrex																
	NRC Conversion Currently Combined Switch-As-Is with allowed changes, per port			UEP9D	USAC2		21.50	8.42								
	Conversion of existing Centrex Common Block, each			UEP9D	USACN		5.17	8.32								
	New Centrex Standard Common Block			UEP9D	M1ACS	0.00	618.82									
	New Centrex Customized Common Block			UEP9D	M1ACC	0.00	618.82									
	NAR Establishment Charge, Per Occasion			UEP9D	URECA	0.00	66.48									
Additional Non-Recurring Charges (NRC)																
	Unbundled Miscellaneous Rate Element, Tag Loop at End Use Premise			UEP9D	URETL		8.33	0.83								
	Unbundled Miscellaneous Rate Element, Tag Design Loop at End Use Premise			UEP9D	URETN		11.21	1.10								
UNE-P CENTREX - EWSD (Valid in AL, FL, KY, LA, MS & TN)																
2-Wire VG Loop/2-Wire Voice Grade Port (Centrex) Combo																
UNE Port/Loop Combination Rates (Non-Design)																
	2-Wire VG Loop/2-Wire Voice Grade Port (Centrex) Port Combo - Non-Design		1	UEP9E		10.94										
	2-Wire VG Loop/2-Wire Voice Grade Port (Centrex)Port Combo - Non-Design		2	UEP9E		15.05										
	2-Wire VG Loop/2-Wire Voice Grade Port (Centrex)Port Combo - Non-Design		3	UEP9E		25.80										
UNE Port/Loop Combination Rates (Design)																
	2-Wire VG Loop/2-Wire Voice Grade Port (Centrex) Port Combo - Design		1	UEP9E		13.41										
	2-Wire VG Loop/2-Wire Voice Grade Port (Centrex)Port Combo - Design		2	UEP9E		18.57										
	2-Wire VG Loop/2-Wire Voice Grade Port (Centrex)Port Combo - Design		3	UEP9E		32.04										
UNE Loop Rate																
	2-Wire Voice Grade Loop (SL 1) - Zone 1		1	UEP9E	UECS1	9.77										
	2-Wire Voice Grade Loop (SL 1) - Zone 2		2	UEP9E	UECS1	13.88										
	2-Wire Voice Grade Loop (SL 1) - Zone 3		3	UEP9E	UECS1	24.63										
	2-Wire Voice Grade Loop (SL 2) - Zone 1		1	UEP9E	UECS2	12.24										
	2-Wire Voice Grade Loop (SL 2) - Zone 2		2	UEP9E	UECS2	17.40										
	2-Wire Voice Grade Loop (SL 2) - Zone 3		3	UEP9E	UECS2	30.87										
UNE Port Rate																
AL, FL, KY, LA, MS, & TN only																
	2-Wire Voice Grade Port (Centrex) Basic Local Area			UEP9E	UEPYA	1.17	53.31	26.46	27.50	8.37						
	2-Wire Voice Grade Port (Centrex 800 termination)Basic Local Area			UEP9E	UEPYB	1.17	53.31	26.46	27.50	8.37						
	2-Wire Voice Grade Port (Centrex with Caller ID)1Basic Local Area			UEP9E	UEPYH	1.17	53.31	26.46	27.50	8.37						
	2-Wire Voice Grade Port (Centrex from diff Serving Wire Center)2,3 Basic Local Area			UEP9E	UEPYM	1.17	139.49	86.10	65.41	13.81						
	2-Wire Voice Grade Port, Diff Serving Wire Center 2,3 - 800 Service Term - Basic Local Area			UEP9E	UEPYZ	1.17	139.49	86.10	65.41	13.81						
	2-Wire Voice Grade Port terminated in on Megalink or equivalent - Basic Local Area			UEP9E	UEPY9	1.17	53.31	26.46	27.50	8.37						

UNBUNDLED NETWORK ELEMENTS - Florida														Attachment: 2		Exhibit: A	
CATEGORY		RATE ELEMENTS	Interim	Zone	BCS	USOC	RATES ($)					Svc Order Submitted Elec per LSR	Svc Order Submitted Manually per LSR	Incremental Charge - Manual Svc Order vs. Electronic-1st	Incremental Charge - Manual Svc Order vs. Electronic-Add'l	Incremental Charge - Manual Svc Order vs. Electronic-Disc 1st	Incremental Charge - Manual Svc Order vs. Electronic-Disc Add'l
							Rec	Nonrecurring		Nonrecurring Disconnect		OSS Rates ($)					
								First	Add'l	First	Add'l	SOMEC	SOMAN	SOMAN	SOMAN	SOMAN	SOMAN
		2-Wire Voice Grade Port Terminated on 800 Service Term - Basic Local Area			UEP9E	UEPY2	1.17	53.31	26.46	27.50	8.37						
	Florida Only																
		2-Wire Voice Grade Port (Centrex)			UEP9E	UEPHA	1.17	53.31	26.46	27.50	8.37						
		2-Wire Voice Grade Port (Centrex 800 termination)			UEP9E	UEPHB	1.17	53.31	26.46	27.50	8.37						
		2-Wire Voice Grade Port (Centrex with Caller ID)1			UEP9E	UEPHH	1.17	53.31	26.46	27.50	8.37						
		2-Wire Voice Grade Port (Centrex from diff Serving Wire Center)2,3			UEP9E	UEPHM	1.17	139.49	86.10	65.41	13.81						
		2-Wire Voice Grade Port, Diff Serving Wire Center - 800 Service Term 2,3			UEP9E	UEPHZ	1.17	139.49	86.10	65.41	13.81						
		2-Wire Voice Grade Port terminated in on Megalink or equivalent			UEP9E	UEPH9	1.17	53.31	26.46	27.50	8.37						
		2-Wire Voice Grade Port Terminated on 800 Service Term			UEP9E	UEPH2	1.17	53.31	26.46	27.50	8.37						
	Local Switching																
		Centrex Intercom Funtionality, per port			UEP9E	URECS	0.7384										
	Local Number Portability																
		Local Number Portability (1 per port)			UEP9E	LNPCC	0.35										
	Features																
		All Standard Features Offered, per port			UEP9E	UEPVF	2.26										
		All Select Features Offered, per port			UEP9E	UEPVS	0.00	370.70									
		All Centrex Control Features Offered, per port			UEP9E	UEPVC	2.26										
	NARS																
		Unbundled Network Access Register - Combination			UEP9E	UARCX	0.00	0.00	0.00	0.00	0.00						
		Unbundled Network Access Register - Indial			UEP9E	UAR1X	0.00	0.00	0.00	0.00	0.00						
		Unbundled Network Access Register - Outdial			UEP9E	UAROX	0.00	0.00	0.00	0.00	0.00						
	Miscellaneous Terminations																
	2-Wire Trunk Side																
		Trunk Side Terminations, each			UEP9E	CEND6	8.73										
	4-Wire Digital (1.544 Megabits)																
		DS1 Circuit Terminations, each			UEP9E	M1HD1	54.95										
		DS0 Channel Activated Per Channel			UEP9E	M1HDO	0.00	15.69									
	Interoffice Channel Mileage - 2-Wire																
		Interoffice Channel Facilities Termination			UEP9E	M1GBC	25.32										
		Interoffice Channel mileage, per mile or fraction of mile			UEP9E	M1GBM	0.0091										
	Feature Activations (DS0) Centrex Loops on Channelized DS1 Service																
	D4 Channel Bank Feature Activations																
		Feature Activation on D-4 Channel Bank Centrex Loop Slot			UEP9E	1PQWS	0.66										
		Feature Activation on D-4 Channel Bank FX line Side Loop Slot			UEP9E	1PQW6	0.66										
		Feature Activation on D-4 Channel Bank FX Trunk Side Loop Slot			UEP9E	1PQW7	0.66										
		Feature Activation on D-4 Channel Bank Centrex Loop Slot - Different Wire Center			UEP9E	1PQWP	0.66										
		Feature Activation on D-4 Channel Bank Private Line Loop Slot			UEP9E	1PQWV	0.66										
		Feature Activation on D-4 Channel Bank Tjie Line/Trunk Loop Slot			UEP9E	1PQWQ	0.66										
		Feature Activation on D-4 Channel Bank WATS Loop Slot			UEP9E	1PQWA	0.66										
	Non-Recurring Charges (NRC) Associated with UNE-P Centrex																
		NRC Conversion Currently Combined Switch-As-Is with allowed changes, per port			UEP9E	USAC2		21.50	8.42								
		Conversion of Existing Centrex Common Block, each			UEP9E	USACN		5.17	8.32								
		New Centrex Standard Common Block			UEP9E	M1ACS	0.00	618.82									
		New Centrex Customized Common Block			UEP9E	M1ACC	0.00	618.82									
		NAR Establishment Charge, Per Occasion			UEP9E	URECA	0.00	66.48									
	Additional Non-Recurring Charges (NRC)																
		Unbundled Miscellaneous Rate Element, Tag Loop at End Use Premise			UEP9E	URETL		8.33	0.83								

UNBUNDLED NETWORK ELEMENTS - Florida														Attachment: 2		Exhibit: A	
CATEGORY		RATE ELEMENTS	Interim	Zone	BCS	USOC	RATES ($)					Svc Order Submitted Elec per LSR	Svc Order Submitted Manually per LSR	Incremental Charge - Manual Svc Order vs. Electronic-1st	Incremental Charge - Manual Svc Order vs. Electronic-Add'l	Incremental Charge - Manual Svc Order vs. Electronic-Disc 1st	Incremental Charge - Manual Svc Order vs. Electronic-Disc Add'l
							Rec	Nonrecurring		Nonrecurring Disconnect		OSS Rates ($)					
								First	Add'l	First	Add'l	SOMEC	SOMAN	SOMAN	SOMAN	SOMAN	SOMAN
		Unbundled Miscellaneous Rate Element, Tag Design Loop at End Use Premise			UEP9E	URETN		11.21	1.10								
	Note 1 - Required Port for Centrex Control in 1AESS, 5ESS & EWSD																
	Note 2 - Requres Interoffice Channel Mileage																
	Note 3 - Installation is combination of Installation charge for SL2 Loop and Port																
	Note 4 - Requires Specific Customer Premises Equipment																
	Note: Rates displaying an "R" in Interim column are interim and subject to rate true-up as set forth in General Terms and Conditions.																

UNBUNDLED NETWORK ELEMENTS - Georgia														Attachment: 2		Exhibit: A	
CATEGORY		RATE ELEMENTS	Interim	Zone	BCS	USOC	RATES ($)					Svc Order Submitted Elec per LSR	Svc Order Submitted Manually per LSR	Incremental Charge - Manual Svc Order vs. Electronic-1st	Incremental Charge - Manual Svc Order vs. Electronic-Add'l	Incremental Charge - Manual Svc Order vs. Electronic-Disc 1st	Incremental Charge - Manual Svc Order vs. Electronic-Disc Add'l
							Rec	Nonrecurring		Nonrecurring Disconnect		OSS Rates ($)					
								First	Add'l	First	Add'l	SOMEC	SOMAN	SOMAN	SOMAN	SOMAN	SOMAN
	The "Zone" shown in the sections for stand-alone loops or loops as part of a combination refers to Geographically Deaveraged UNE Zones. To view Geographically Deaveraged UNE Zone Designations by Central Office, refer to internet Website: http://www.interconnection.bellsouth.com/become_a_clec/html/interconnection.htm																
OPERATIONAL SUPPORT SYSTEMS (OSS) - "REGIONAL RATES"																	
	NOTE: (1) CLEC should contact its contract negotiator if it prefers the "state specific" OSS charges as ordered by the State Commissions. The OSS charges currently contained in this rate exhibit are the BellSouth "regional" service ordering charges. CLEC may elect either the state specific Commission ordered rates for the service ordering charges, or CLEC may elect the regional service ordering charge, however, CLEC can not obtain a mixture of the two regardless if CLEC has a interconnection contract established in each of the 9 states.																
	NOTE: (2) Any element that can be ordered electronically will be billed according to the SOMEC rate listed in this category. Please refer to BellSouth's Local Ordering Handbook (LOH) to determine if a product can be ordered electronically. For those elements that cannot be ordered electronically at present per the LOH, the listed SOMEC rate in this category reflects the charge that would be billed to a CLEC once electronic ordering capabilities come on-line for that element. Otherwise, the manual ordering charge, SOMAN, will be applied to a CLECs bill when it submits an LSR to BellSouth.																
		OSS - Electronic Service Order Charge, Per Local Service Request (LSR) - UNE Only				SOMEC		3.50	0.00	3.50	0.00						
		OSS - Manual Service Order Charge, Per Local Service Request (LSR) - UNE Only				SOMAN		11.73	0.00	6.13	0.00						
UNE SERVICE DATE ADVANCEMENT CHARGE																	
	NOTE: The Expedite charge will be maintained commensurate with BellSouth's FCC No.1 Tariff, Section 5 as applicable.																
		UNE Expedite Charge per Circuit or Line Assignable USOC, per Day			UAL, UEANL, UCL, UEF, UDC, UDF, UEQ, UDL, UENTW, UDN, UEA, UHL, ULC, USL, U1T12, U1T48, U1TD1, U1TD3, U1TDX, U1TO3, U1TS1, U1TVX, UC1BC, UC1BL, UC1CC, UC1CL, UC1DC, UC1DL, UC1EC, UC1EL, UC1FC, UC1FL, UC1GC, UC1GL, UC1HC, UC1HL, UDL12, UDL48, UDLO3, UDLSX, UE3, ULD12, ULD48, ULDD1, ULDD3, ULDDX, ULDO3, ULDS1, ULDVX, UNC1X, UNC3X, UNCDX, UNCNX, UNCSX, UNCVX, UNLD1, UNLD3, UXTD1, UXTD3, UXTS1, U1TUC, U1TUD, U1TUB, U1TUA	SDASP		200.00									
UNBUNDLED EXCHANGE ACCESS LOOP																	
	2-WIRE ANALOG VOICE GRADE LOOP																
		2-Wire Analog Voice Grade Loop - Service Level 1- Zone 1		1	UEANL	UEAL2	10.51	40.02	9.99	5.61	1.72						
		2-Wire Analog Voice Grade Loop - Service Level 1- Zone 2		2	UEANL	UEAL2	15.85	40.02	9.99	5.61	1.72						
		2-Wire Analog Voice Grade Loop - Service Level 1- Zone 3		3	UEANL	UEAL2	31.97	40.02	9.99	5.61	1.72						
		2-Wire Analog Voice Grade Loop - Service Level 1- Zone 1		1	UEANL	UEASL	10.51	40.02	9.99	5.61	1.72						
		2-Wire Analog Voice Grade Loop - Service Level 1- Zone 2		2	UEANL	UEASL	15.85	40.02	9.99	5.61	1.72						
		2-Wire Analog Voice Grade Loop - Service Level 1- Zone 3		3	UEANL	UEASL	31.97	40.02	9.99	5.61	1.72						
		Unbundled Miscellaneous Rate Element, Tag Loop at End User Premise			UEANL	URETL		8.33	0.83								
		Loop Testing - Basic 1st Half Hour			UEANL	URET1		25.12	25.12								
		Loop Testing - Basic Additional Half Hour			UEANL	URETA		13.62	13.62								

UNBUNDLED NETWORK ELEMENTS - Georgia													Attachment: 2		Exhibit: A	
CATEGORY	RATE ELEMENTS	Interim	Zone	BCS	USOC	RATES ($)					Svc Order Submitted Elec per LSR	Svc Order Submitted Manually per LSR	Incremental Charge - Manual Svc Order vs. Electronic-1st	Incremental Charge - Manual Svc Order vs. Electronic-Add'l	Incremental Charge - Manual Svc Order vs. Electronic-Disc 1st	Incremental Charge - Manual Svc Order vs. Electronic-Disc Add'l
						Rec	Nonrecurring		Nonrecurring Disconnect		OSS Rates ($)					
							First	Add'l	First	Add'l	SOMEC	SOMAN	SOMAN	SOMAN	SOMAN	SOMAN
	CLEC to CLEC Conversion Charge Without Outside Dispatch (UVL-SL1)			UEANL	UREWO		15.75	8.92								
	Unbundled Voice Loop, Non-Design Voice Loop, billing for BST providing make-up (Engineering Information - E.I.)			UEANL	UEANM		7.30	7.30								
	Manual Order Coordiantion for UVL-SL1s (per loop)			UEANL	UEAMC		18.92	18.92								
	Order Coordination for Specified Conversion Time for UVL-SL1 (per LSR)			UEANL	OCOSL		57.79									
2-WIRE UNBUNDLED COPPER LOOP - NON-DESIGNED																
	2 Wire Unbundled Copper Loop Non-Designed- Zone 1		1	UEQ	UEQ2X	11.02	44.69	22.40	0.00	0.00						
	2 Wire Unbundled Copper Loop Non-Designed- Zone 2		2	UEQ	UEQ2X	12.72	44.69	22.40	0.00	0.00						
	2 Wire Unbundled Copper Loop Non-Designed-Zone 3		3	UEQ	UEQ2X	20.22	44.69	22.40	0.00	0.00						
	Unbundled Miscellaneous Rate Element, Tag Loop at End User Premise			UEQ	URETL		8.33	0.83								
	Manual Order Coordination 2 Wire Unbundled Copper Loop - Non-Designed (per loop)			UEQ	USBMC		18.92	18.92								
	Unbundled Copper Loop, Non-Design Copper Loop, billing for BST providing make-up (Engineering Information - E.I.)			UEQ	UEQMU		7.30	7.30								
	Loop Testing - Basic 1st Half Hour			UEQ	URET1		25.12	25.12								
	Loop Testing - Basic Additional Half Hour			UEQ	URETA		13.62	13.62								
	CLEC to CLEC Conversion Charge Without Outside Dispatch (UCL-ND)			UEQ	UREWO		14.25	7.42								
UNBUNDLED EXCHANGE ACCESS LOOP																
2-WIRE ANALOG VOICE GRADE LOOP																
UNE Loop Rates for Line Splitting (In Ga. PSC ordered the line splitting loop USOCs match the lower port- loop combo rates UEPLX)																
	2-Wire Voice Grade Loop (SL1) for Line Splitting - Zone 1	I	1	UEPSR UEPSB	UEALS	9.56	10.05	7.36	1.37	1.28						
	2-Wire Voice Grade Loop (SL1) for Line Splitting - Zone 1	I	1	UEPSR UEPSB	UEABS	9.56	10.05	7.36	1.37	1.28						
	2-Wire Voice Grade Loop (SL1) for Line Splitting - Zone 2	I	2	UEPSR UEPSB	UEALS	14.86	10.05	7.36	1.37	1.28						
	2-Wire Voice Grade Loop (SL1) for Line Splitting - Zone 2	I	2	UEPSR UEPSB	UEABS	14.86	10.05	7.36	1.37	1.28						
	2-Wire Voice Grade Loop (SL1)for Line Splitting - Zone 3	I	3	UEPSR UEPSB	UEALS	31.66	10.05	7.36	1.37	1.28						
	2-Wire Voice Grade Loop (SL1)for Line Splitting - Zone 3	I	3	UEPSR UEPSB	UEABS	31.66	10.05	7.36	1.37	1.28						
UNBUNDLED EXCHANGE ACCESS LOOP																
2-WIRE ANALOG VOICE GRADE LOOP																
	2-Wire Analog Voice Grade Loop - Service Level 2 w/Loop or Ground Start Signaling - Zone 1		1	UEA	UEAL2	11.57	79.85	24.65	18.92	7.87						
	2-Wire Analog Voice Grade Loop - Service Level 2 w/Loop or Ground Start Signaling - Zone 2		2	UEA	UEAL2	16.95	79.85	24.65	18.92	7.87						
	2-Wire Analog Voice Grade Loop - Service Level 2 w/Loop or Ground Start Signaling - Zone 3		3	UEA	UEAL2	33.08	79.85	24.65	18.92	7.87						
	Order Coordination for Specified Conversion Time (per LSR)			UEA	OCOSL		57.79									
	2-Wire Analog Voice Grade Loop - Service Level 2 w/Reverse Battery Signaling - Zone 1		1	UEA	UEAR2	11.57	79.85	24.65	18.92	7.87						
	2-Wire Analog Voice Grade Loop - Service Level 2 w/Reverse Battery Signaling - Zone 2		2	UEA	UEAR2	16.95	79.85	24.65	18.92	7.87						
	2-Wire Analog Voice Grade Loop - Service Level 2 w/Reverse Battery Signaling - Zone 3		3	UEA	UEAR2	33.08	79.85	24.65	18.92	7.87						
	Order Coordination for Specified Conversion Time (per LSR)			UEA	OCOSL		57.79									
	CLEC to CLEC Conversion Charge without outside dispatch			UEA	UREWO		87.72	36.36								
	Loop Tagging - Service Level 2 (SL2)			UEA	URETL		11.19	1.10								
4-WIRE ANALOG VOICE GRADE LOOP																
	4-Wire Analog Voice Grade Loop - Zone 1		1	UEA	UEAL4	17.80	93.01	28.17	19.52	8.12						
	4-Wire Analog Voice Grade Loop - Zone 2		2	UEA	UEAL4	21.68	93.01	28.17	19.52	8.12						
	4-Wire Analog Voice Grade Loop - Zone 3		3	UEA	UEAL4	30.25	93.01	28.17	19.52	8.12						
	Order Coordination for Specified Conversion Time (per LSR)			UEA	OCOSL		57.79									
	CLEC to CLEC Conversion Charge without outside dispatch			UEA	UREWO		87.72	36.36								
2-WIRE ISDN DIGITAL GRADE LOOP																
	2-Wire ISDN Digital Grade Loop - Zone 1		1	UDN	U1L2X	21.89	180.06	35.25	18.23	6.97						
	2-Wire ISDN Digital Grade Loop - Zone 2		2	UDN	U1L2X	25.27	180.06	35.25	18.23	6.97						
	2-Wire ISDN Digital Grade Loop - Zone 3		3	UDN	U1L2X	40.17	180.06	35.25	18.23	6.97						
	Order Coordination For Specified Conversion Time (per LSR)			UDN	OCOSL		57.79									

UNBUNDLED NETWORK ELEMENTS - Georgia														Attachment: 2		Exhibit: A	
CATEGORY		RATE ELEMENTS	Interim	Zone	BCS	USOC	RATES ($)					Svc Order Submitted Elec per LSR	Svc Order Submitted Manually per LSR	Incremental Charge - Manual Svc Order vs. Electronic-1st	Incremental Charge - Manual Svc Order vs. Electronic-Add'l	Incremental Charge - Manual Svc Order vs. Electronic-Disc 1st	Incremental Charge - Manual Svc Order vs. Electronic-Disc Add'l
							Rec	Nonrecurring		Nonrecurring Disconnect		OSS Rates ($)					
								First	Add'l	First	Add'l	SOMEC	SOMAN	SOMAN	SOMAN	SOMAN	SOMAN
		CLEC to CLEC Conversion Charge without outside dispatch			UDN	UREWO		120.98	33.04								
	2-WIRE ASYMMETRICAL DIGITAL SUBSCRIBER LINE (ADSL) COMPATIBLE LOOP																
		2 Wire Unbundled ADSL Loop including manual service inquiry & facility reservation - Zone 1	I	1	UAL	UAL2X	11.23	44.69	31.55	0.00	0.00						
		2 Wire Unbundled ADSL Loop including manual service inquiry & facility reservation - Zone 2	I	2	UAL	UAL2X	12.97	44.69	31.55	0.00	0.00						
		2 Wire Unbundled ADSL Loop including manual service inquiry & facility reservation - Zone 3	I	3	UAL	UAL2X	20.62	44.69	31.55	0.00	0.00						
		Order Coordination for Specified Conversion Time (per LSR)			UAL	OCOSL		57.79									
		2 Wire Unbundled ADSL Loop without manual service inquiry & facility reservaton - Zone 1	I	1	UAL	UAL2W	11.23	44.69	31.55	0.00	0.00						
		2 Wire Unbundled ADSL Loop without manual service inquiry & facility reservaton - Zone 2	I	2	UAL	UAL2W	12.97	44.69	31.55	0.00	0.00						
		2 Wire Unbundled ADSL Loop without manual service inquiry & facility reservaton - Zone 3	I	3	UAL	UAL2W	20.62	44.69	31.55	0.00	0.00						
		Order Coordination for Specified Conversion Time (per LSR)			UAL	OCOSL		57.79									
		CLEC to CLEC Conversion Charge without outside dispatch	I		UAL	UREWO		44.69	29.29								
	2-WIRE HIGH BIT RATE DIGITAL SUBSCRIBER LINE (HDSL) COMPATIBLE LOOP																
		2 Wire Unbundled HDSL Loop including manual service inquiry & facility reservation - Zone 1	I	1	UHL	UHL2X	7.88	44.69	31.55	0.00	0.00						
		2 Wire Unbundled HDSL Loop including manual service inquiry & facility reservation - Zone 2	I	2	UHL	UHL2X	9.09	44.69	31.55	0.00	0.00						
		2 Wire Unbundled HDSL Loop including manual service inquiry & facility reservation - Zone 3	I	3	UHL	UHL2X	14.48	44.69	31.55	0.00	0.00						
		Order Coordination for Specified Conversion Time (per LSR)			UHL	OCOSL		57.79									
		2 Wire Unbundled HDSL Loop without manual service inquiry and facility reservation - Zone 1	I	1	UHL	UHL2W	7.88	44.69	31.55	0.00	0.00						
		2 Wire Unbundled HDSL Loop without manual service inquiry and facility reservation - Zone 2	I	2	UHL	UHL2W	9.09	44.69	31.55	0.00	0.00						
		2 Wire Unbundled HDSL Loop without manual service inquiry and facility reservation - Zone 3	I	3	UHL	UHL2W	14.48	44.69	31.55	0.00	0.00						
		Order Coordination for Specified Conversion Time (per LSR)			UHL	OCOSL		57.79									
		CLEC to CLEC Conversion Charge without outside dispatch	I		UHL	UREWO		44.69	31.55								
	4-WIRE HIGH BIT RATE DIGITAL SUBSCRIBER LINE (HDSL) COMPATIBLE LOOP																
		4 Wire Unbundled HDSL Loop including manual service inquiry and facility reservation - Zone 1	I	1	UHL	UHL4X	10.39	44.69	31.55	0.00	0.00						
		4-Wire Unbundled HDSL Loop including manual service inquiry and facility reservation - Zone 2	I	2	UHL	UHL4X	12.00	44.69	31.55	0.00	0.00						
		4-Wire Unbundled HDSL Loop including manual service inquiry and facility reservation - Zone 3	I	3	UHL	UHL4X	19.07	44.69	31.55	0.00	0.00						
		Order Coordination for Specified Conversion Time (per LSR)			UHL	OCOSL		57.79									
		4-Wire Unbundled HDSL Loop without manual service inquiry and facility reservation - Zone 1	I	1	UHL	UHL4W	10.39	44.69	31.55	0.00	0.00						
		4-Wire Unbundled HDSL Loop without manual service inquiry and facility reservation - Zone 2	I	2	UHL	UHL4W	12.00	44.69	31.55	0.00	0.00						
		4-Wire Unbundled HDSL Loop without manual service inquiry and facility reservation - Zone 3	I	3	UHL	UHL4W	19.07	44.69	31.55	0.00	0.00						
		Order Coordination for Specified Conversion Time (per LSR)			UHL	OCOSL		57.79									
		CLEC to CLEC Conversion Charge without outside dispatch	I		UHL	UREWO		44.69	31.55								
	4-WIRE DS1 DIGITAL LOOP																
		4-Wire DS1 Digital Loop - Zone 1		1	USL	USLXX	41.02	211.93	72.49	38.24	7.20						
		4-Wire DS1 Digital Loop - Zone 2		2	USL	USLXX	46.41	211.93	72.49	38.24	7.20						
		4-Wire DS1 Digital Loop - Zone 3		3	USL	USLXX	62.03	211.93	72.49	38.24	7.20						
		Order Coordination for Specified Conversion Time (per LSR)			USL	OCOSL		57.79									
		CLEC to CLEC Conversion Charge without outside dispatch			USL	UREWO		100.91	42.97								
	4-WIRE 19.2, 56 OR 64 KBPS DIGITAL GRADE LOOP																
		4 Wire Unbundled Digital 19.2 Kbps		1	UDL	UDL19	21.86	196.66	37.00	18.82	7.20						
		4 Wire Unbundled Digital 19.2 Kbps		2	UDL	UDL19	28.36	196.66	37.00	18.82	7.20						
		4 Wire Unbundled Digital 19.2 Kbps		3	UDL	UDL19	38.22	196.66	37.00	18.82	7.20						

UNBUNDLED NETWORK ELEMENTS - Georgia														Attachment: 2		Exhibit: A	
CATEGORY		RATE ELEMENTS	Interim	Zone	BCS	USOC	RATES ($)					Svc Order Submitted Elec per LSR	Svc Order Submitted Manually per LSR	Incremental Charge - Manual Svc Order vs. Electronic-1st	Incremental Charge - Manual Svc Order vs. Electronic-Add'l	Incremental Charge - Manual Svc Order vs. Electronic-Disc 1st	Incremental Charge - Manual Svc Order vs. Electronic-Disc Add'l
							Rec	Nonrecurring		Nonrecurring Disconnect		OSS Rates ($)					
								First	Add'l	First	Add'l	SOMEC	SOMAN	SOMAN	SOMAN	SOMAN	SOMAN
		4 Wire Unbundled Digital Loop 56 Kbps - Zone 1		1	UDL	UDL56	21.86	196.66	37.00	18.82	7.20						
		4 Wire Unbundled Digital Loop 56 Kbps - Zone 2		2	UDL	UDL56	28.36	196.66	37.00	18.82	7.20						
		4 Wire Unbundled Digital Loop 56 Kbps - Zone 3		3	UDL	UDL56	38.22	196.66	37.00	18.82	7.20						
		Order Coordination for Specified Conversion Time (per LSR)			UDL	OCOSL		57.79									
		4 Wire Unbundled Digital Loop 64 Kbps - Zone 1		1	UDL	UDL64	21.86	196.66	37.00	18.82	7.20						
		4 Wire Unbundled Digital Loop 64 Kbps - Zone 2		2	UDL	UDL64	28.36	196.66	37.00	18.82	7.20						
		4 Wire Unbundled Digital Loop 64 Kbps - Zone 3		3	UDL	UDL64	38.22	196.66	37.00	18.82	7.20						
		Order Coordination for Specified Conversion Time (per LSR)			UDL	OCOSL		57.79									
		CLEC to CLEC Conversion Charge without outside dispatc h			UDL	UREWO		101.95	49.66								
	2-WIRE Unbundled COPPER LOOP																
		2-Wire Unbundled Copper Loop-Designed including manual service inquiry & facility reservation - Zone 1	I	1	UCL	UCLPB	12.02	44.69	31.55	0.00	0.00						
		2-Wire Unbundled Copper Loop-Designed including manual service inquiry & facility reservation - Zone 2	I	2	UCL	UCLPB	13.88	44.69	31.55	0.00	0.00						
		2 Wire Unbundled Copper Loop-Designed including manual service inquiry & facility reservation - Zone 3	I	3	UCL	UCLPB	22.07	44.69	31.55	0.00	0.00						
		Order Coordination for Unbundled Copper Loops (per loop)			UCL	UCLMC		18.92	18.92								
		2-Wire Unbundled Copper Loop-Designed without manual service inquiry and facility reservation - Zone 1	I	1	UCL	UCLPW	12.02	44.69	31.55	0.00	0.00						
		2-Wire Unbundled Copper Loop-Designed without manual service inquiry and facility reservation - Zone 2	I	2	UCL	UCLPW	13.88	44.69	31.55	0.00	0.00						
		2-Wire Unbundled Copper Loop-Designed without manual service inquiry and facility reservation - Zone 3	I	3	UCL	UCLPW	22.07	44.69	31.55	0.00	0.00						
		Order Coordination for Unbundled Copper Loops (per loop)			UCL	UCLMC		18.92	18.92								
		Order Coordination for Unbundled Copper Loops (per loop)			UCL	UCLMC		18.92	18.92								
		CLEC to CLEC Conversion Charge without outside dispatch (UCL-Des)	I		UCL	UREWO		44.69	31.55								
	4-WIRE COPPER LOOP																
		4-Wire Copper Loop-Designed including manual service inquiry and facility reservation - Zone 1	I	1	UCL	UCL4S	16.65	44.69	31.55	0.00	0.00						
		4-Wire Copper Loop-Designed including manual service inquiry and facility reservation - Zone 2	I	2	UCL	UCL4S	19.22	44.69	31.55	0.00	0.00						
		4-Wire Copper Loop-Designed including manual service inquiry and facility reservation - Zone 3	I	3	UCL	UCL4S	30.55	44.69	31.55	0.00	0.00						
		Order Coordination for Unbundled Copper Loops (per loop)			UCL	UCLMC		18.92	18.92								
		4-Wire Copper Loop-Designed without manual service inquiry and facility reservation - Zone 1	I	1	UCL	UCL4W	16.65	44.69	31.55	0.00	0.00						
		4-Wire Copper Loop-Designed without manual service inquiry and facility reservation - Zone 2	I	2	UCL	UCL4W	19.22	44.69	31.55	0.00	0.00						
		4-Wire Copper Loop-Designed without manual service inquiry and facility reservation - Zone 3	I	3	UCL	UCL4W	30.55	44.69	31.55	0.00	0.00						
		Order Coordination for Unbundled Copper Loops (per loop)			UCL	UCLMC		18.92	18.92								
		CLEC to CLEC conversion Charge without outside dispatch	I		UCL	UREWO		44.69	31.55								
LOOP MODIFICATION																	
		Unbundled Loop Modification, Removal of Load Coils - 2 Wire pair less than or equal to 18k ft, per Unbundled Loop	I		UAL, UHL, UCL, UEQ, ULS, UEA, UEANL, UEPSR, UEPSB	ULM2L		0.00	0.00								
		Unbundled Loop Modification Removal of Load Coils - 4 Wire less than or equal to 18K ft, per Unbundled Loop	I		UHL, UCL, UEA	ULM4L		0.00	0.00								
		Unbundled Loop Modification Removal of Bridged Tap Removal, per Unbundled Loop			UAL, UHL, UCL, UEQ, ULS, UEA, UEANL, UEPSR, UEPSB	ULMBT		17.91									
SUB-LOOPS																	
	Sub-Loop Distribution																
		Sub-Loop - Per Cross Box Location - CLEC Feeder Facility Set-Up			UEANL	USBSA		255.76									

UNBUNDLED NETWORK ELEMENTS - Georgia														Attachment: 2		Exhibit: A	
CATEGORY		RATE ELEMENTS	Interim	Zone	BCS	USOC	RATES ($)					Svc Order Submitted Elec per LSR	Svc Order Submitted Manually per LSR	Incremental Charge - Manual Svc Order vs. Electronic-1st	Incremental Charge - Manual Svc Order vs. Electronic-Add'l	Incremental Charge - Manual Svc Order vs. Electronic-Disc 1st	Incremental Charge - Manual Svc Order vs. Electronic-Disc Add'l
							Rec	Nonrecurring		Nonrecurring Disconnect		OSS Rates ($)					
								First	Add'l	First	Add'l	SOMEC	SOMAN	SOMAN	SOMAN	SOMAN	SOMAN
		Sub-Loop - Per Cross Box Location - Per 25 Pair Panel Set-Up			UEANL	USBSB		7.29									
		Sub-Loop - Per Building Equipment Room - CLEC Feeder Facility Set-Up			UEANL	USBSC		175.09									
		Sub-Loop - Per Building Equipment Room - Per 25 Pair Panel Set-Up			UEANL	USBSD		51.61									
		Unbundled Sub-Loops, Riser Cable, 2-Wire per Loop, Working and Spare Loop Activation			UEANL	USBRC	3.61	28.46	3.85	2.20	0.01						
		Unbundled Sub-Loops, Riser Cable, 4-Wire per Loop, Working and Spare Loop Activation			UEANL	USBRD	7.67	31.07	4.79	2.27	0.01						
		Sub-Loop Distribution Per 2-Wire Analog Voice Grade Loop - Zone 1		1	UEANL	USBN2	6.52	28.46	3.85	2.20	0.01						
		Sub-Loop Distribution Per 2-Wire Analog Voice Grade Loop - Zone 2		2	UEANL	USBN2	10.18	28.46	3.85	2.20	0.01						
		Sub-Loop Distribution Per 2-Wire Analog Voice Grade Loop - Zone 3		3	UEANL	USBN2	19.51	28.46	3.85	2.20	0.01						
		Sub-Loop Distribution Per 4-Wire Analog Voice Grade Loop - Zone 1		1	UEANL	USBN4	5.93	31.07	4.79	2.27	0.01						
		Sub-Loop Distribution Per 4-Wire Analog Voice Grade Loop - Zone 2		2	UEANL	USBN4	9.71	31.07	4.79	2.27	0.01						
		Sub-Loop Distribution Per 4-Wire Analog Voice Grade Loop - Zone 3		3	UEANL	USBN4	18.85	31.07	4.79	2.27	0.01						
		Order Coordination for Unbundled Sub-Loops, per sub-loop pair			UEANL	USBMC		18.92	18.92								
		Sub-Loop 2-Wire Intrabuilding Network Cable (INC)			UEANL	USBR2	3.61	28.46	3.85	2.20	0.01						
		Order Coordination for Unbundled Sub-Loops, per sub-loop pair			UEANL	USBMC		18.92	18.92								
		Sub-Loop 4-Wire Intrabuilding Network Cable (INC)	I		UEANL	USBR4	7.67	31.07	4.79	2.27	0.01						
		Order Coordination for Unbundled Sub-Loops, per sub-loop pair			UEANL	USBMC		18.92	18.92								
		Loop Testing - Basic 1st Half Hour			UEANL	URET1		25.12	25.12								
		Loop Testing - Basic Additional Half Hour			UEANL	URETA		13.62	13.62								
		2 Wire Copper Unbundled Sub-Loop Distribution - Zone 1	I	1	UEF	UCS2X	5.94	28.46	3.85	2.20	0.01						
		2 Wire Copper Unbundled Sub-Loop Distribution - Zone 2	I	2	UEF	UCS2X	7.51	28.46	3.85	2.20	0.01						
		2 Wire Copper Unbundled Sub-Loop Distribution - Zone 3	I	3	UEF	UCS2X	9.22	28.46	3.85	2.20	0.01						
		Order Coordination for Unbundled Sub-Loops, per sub-loop pair			UEF	USBMC		18.92	18.92								
		4 Wire Copper Unbundled Sub-Loop Distribution - Zone 1	I	1	UEF	UCS4X	6.37	31.07	4.79	2.27	0.01						
		4 Wire Copper Unbundled Sub-Loop Distribution - Zone 2	I	2	UEF	UCS4X	6.32	31.07	4.79	2.27	0.01						
		4 Wire Copper Unbundled Sub-Loop Distribution - Zone 3	I	3	UEF	UCS4X	9.10	31.07	4.79	2.27	0.01						
		Order Coordination for Unbundled Sub-Loops, per sub-loop pair			UEF	USBMC		18.92	18.92								
		Loop Testing - Basic 1st Half Hour			UEF	URET1		25.12	25.12								
		Loop Testing - Basic Additional Half Hour			UEF	URETA		13.62	13.62								
	Unbundled Network Terminating Wire (UNTW)																
		Unbundled Network Terminating Wire (UNTW) per Pair			UENTW	UENPP	0.533	25.12	12.28								
	Network Interface Device (NID)																
		Network Interface Device (NID) - 1-2 lines	I		UENTW	UND12		32.86	20.69								
		Network Interface Device (NID) - 1-6 lines	I		UENTW	UND16		56.03	43.86								
		Network Interface Device Cross Connect - 2 W	I		UENTW	UNDC2		2.45	2.45								
		Network Interface Device Cross Connect - 4W			UENTW	UNDC4		2.45	2.45								
UNE OTHER, PROVISIONING ONLY - NO RATE																	
		NID - Dispatch and Service Order for NID installation			UENTW	UNDBX	0.00	0.00									
		UNTW Circuit Id Establishment, Provisioning Only - No Rate			UENTW	UENCE	0.00	0.00									
		Unbundled Contract Name, Provisioning Only - No Rate			UEANL,UEF,UEQ,UENTW	UNECN	0.00	0.00									
UNE OTHER, PROVISIONING ONLY - NO RATE																	

UNBUNDLED NETWORK ELEMENTS - Georgia														Attachment: 2		Exhibit: A	
CATEGORY		RATE ELEMENTS	Interim	Zone	BCS	USOC	RATES ($)					Svc Order Submitted Elec per LSR	Svc Order Submitted Manually per LSR	Incremental Charge - Manual Svc Order vs. Electronic-1st	Incremental Charge - Manual Svc Order vs. Electronic-Add'l	Incremental Charge - Manual Svc Order vs. Electronic-Disc 1st	Incremental Charge - Manual Svc Order vs. Electronic-Disc Add'l
							Rec	Nonrecurring		Nonrecurring Disconnect		OSS Rates ($)					
								First	Add'l	First	Add'l	SOMEC	SOMAN	SOMAN	SOMAN	SOMAN	SOMAN
		Unbundled Contact Name, Provisioning Only - no rate			UAL,UCL,UDC,UDL, UDN,UEA,UHL,ULC	UNECN	0.00	0.00									
		Unbundled Sub-Loop Feeder-2 Wire Cross Box Jumper - no rate			UEA,UDN,UCL,UDC	USBFQ	0.00	0.00									
		Unbundled Sub-Loop Feeder-4 Wire Cross Box Jumper - no rate			UEA,USL,UCL,UDL	USBFR	0.00	0.00									
		Unbundled DS1 Loop - Superframe Format Option - no rate			USL	CCOSF	0.00	0.00									
		Unbundled DS1 Loop - Expanded Superframe Format option - no rate			USL	CCOEF	0.00	0.00									
HIGH CAPACITY UNBUNDLED LOCAL LOOP																	
		High Capacity Unbundled Local Loop - DS3 - Per Mile per month			UE3	1L5ND	10.97										
		High Capacity Unbundled Local Loop - DS3 - Facility Termination per month			UE3	UE3PX	253.38	1,753.23	131.90	112.91	75.88						
		High Capacity Unbundled Local Loop - STS-1 - Per Mile per month			UDLSX	1L5ND	10.97										
		High Capacity Unbundled Local Loop - STS-1 - Facility Termination per month			UDLSX	UDLS1	305.42	1,753.23	131.90	112.91	75.88						
LOOP MAKE-UP																	
		Loop Makeup - Preordering Without Reservation, per working or spare facility queried (Manual).			UMK	UMKLW		15.19	15.19								
		Loop Makeup - Preordering With Reservation, per spare facility queried (Manual).			UMK	UMKLP		19.85	19.85								
		Loop Makeup--With or Without Reservation, per working or spare facility queried (Mechanized)			UMK	UMKMQ		0.82	0.82								
LINE SHARING AND LINE SPLITTING																	
	NOTE 1: The Line Sharing monthly recurring rates for all installations completed from October 02, 2003 through midnight October 01, 2004 shall be billed as follows:																
	NOTE 1: 10/02/2003 – 10/01/2004: 25% of the rate for an unbundled copper loop non-designed ("UCLND")																
	NOTE 1: 10/02/2004 – 10/01/2005: 50% of the rate for UCLND																
	NOTE 1: 10/02/2005 – 10/01/2006: 75% of the rate for UCLND																
	NOTE 1: Above will apply to USOCS: ULSDT and ULSCT																
	****NOTE 2: The Line Sharing monthly recurring rates with USOCs ULSDC and ULSCC applies only to circuits installed and inservice on or before October 1, 2003**																
	LINE SHARING																
	SPLITTERS-CENTRAL OFFICE BASED																
		Line Sharing Splitter, per System 96 Line Capacity			ULS	ULSDA	131.00	0.00	0.00	0.00	0.00						
		Line Sharing Splitter, per System 24 Line Capacity			ULS	ULSDB	32.00	0.00	0.00	0.00	0.00						
		Line Sharing Splitter, Per System, 8 Line Capacity			ULS	ULSD8	11.00	0.00	0.00	0.00	0.00						
		Line Sharing-DLEC Owned Splitter in CO-CFA activaton-deactivation (per LSOD)			ULS	ULSDG		66.34	0.00	51.20	0.00						
	END USER ORDERING-CENTRAL OFFICE BASED LINE SHARING																
		Line Sharing - per Line Activation (BST Owned splitter) - OBSOLETE see **NOTE 2			ULS	ULSDC	0.61	10.51	7.70	7.00	4.20						
		Line Share Service, TRO per line activation, BST owned splitter - Central Office Located (25% of UCLND) - please see NOTE 1 (E:10/2/2003)			ULS	ULSDT	2.76	10.51	7.70	7.00	4.20						
		Line Share Service, TRO per line activation, BST owned splitter - Central Office Located (50% of UCLND) - please see NOTE 1 (E:10/2/2004)			ULS	ULSDT	5.51	10.51	7.70	7.00	4.20						
		Line Share Service, TRO per line activation, BST owned splitter - Central Office Located (75% of UCLND) - please see NOTE 1 (E:10/2/2005)			ULS	ULSDT	8.27	10.51	7.70	7.00	4.20						
		Line Sharing - per Subsequent Activity per Line Rearrangement(BST Owned Splitter			ULS	ULSDS		36.23	13.23	16.94	1.69						
		Line Sharing - per Subsequent Activity per Line Rearrangement(DLEC Owned Splitter			ULS	ULSCS		36.23	13.23	16.94	1.69						
		Line Sharing - per Line Activation (DLEC owned Splitter) - OBSOLETE see **NOTE 2			ULS	ULSCC	0.61	17.82	9.36	8.53	4.30						

UNBUNDLED NETWORK ELEMENTS - Georgia														Attachment: 2		Exhibit: A	
CATEGORY		RATE ELEMENTS	Interim	Zone	BCS	USOC	RATES ($)					Svc Order Submitted Elec per LSR	Svc Order Submitted Manually per LSR	Incremental Charge - Manual Svc Order vs. Electronic-1st	Incremental Charge - Manual Svc Order vs. Electronic-Add'l	Incremental Charge - Manual Svc Order vs. Electronic-Disc 1st	Incremental Charge - Manual Svc Order vs. Electronic-Disc Add'l
							Rec	Nonrecurring		Nonrecurring Disconnect		OSS Rates ($)					
								First	Add'l	First	Add'l	SOMEC	SOMAN	SOMAN	SOMAN	SOMAN	SOMAN
		Line Share Service, TRO per line activation, CLEC owned splitter - Central Office Located (25% of UCLND) - please see NOTE 1 (E:10/2/2003)			ULS	ULSCT	2.76	17.82	9.36	8.53	4.30						
		Line Share Service, TRO per line activation, CLEC owned splitter - Central Office Located (50% of UCLND) - please see NOTE 1 (E:10/2/2004)			ULS	ULSCT	5.51	17.82	9.36	8.53	4.30						
		Line Share Service, TRO per line activation, CLEC owned splitter - Central Office Located (75% of UCLND) - please see NOTE 1 (E:10/2/2005)			ULS	ULSCT	8.27	17.82	9.36	8.53	4.30						
	LINE SPLITTING																
	END USER ORDERING-CENTRAL OFFICE BASED																
		Line Splitting - per line activation DLEC owned splitter			UEPSR UEPSB	UREOS	0.61										
		Line Splitting - per line activation BST owned - physical			UEPSR UEPSB	UREBP	0.6297	20.10	12.40	7.68	4.30						
		Line Splitting - per line activation BST owned - virtual			UEPSR UEPSB	UREBV	0.6288	20.10	12.40	7.68	4.30						
	MAINTENANCE																
		No Trouble Found - per 1/2 hour increments - Basic						80.00	55.00								
		No Trouble Found - per 1/2 hour increments - Overtime						120.00	82.50								
		No Trouble Found - per 1/2 hour increments - Premium						160.00	110.00								
UNBUNDLED DEDICATED TRANSPORT																	
	INTEROFFICE CHANNEL - DEDICATED TRANSPORT																
		Interoffice Channel - Dedicated Transport - 2-Wire Voice Grade - Per Mile per month			U1TVX	1L5XX	0.0057										
		Interoffice Channel - Dedicated Transport- 2- Wire Voice Grade - Facility Termination			U1TVX	U1TV2	12.87	48.46	19.48	16.58	5.00						
		Interoffice Channel - Dedicated Transpor t- 2-Wire Voice Grade Rev Bat. - Per Mile per month			U1TVX	1L5XX	0.0057										
		Interoffice Channel - Dedicated Transport- 2- Wire VG Rev Bat. - Facility Termination			U1TVX	U1TR2	12.87	48.46	19.48	16.58	5.00						
		Interoffice Channel - Dedicated Transport - 4-Wire Voice Grade - Per Mile per month			U1TVX	1L5XX	0.0057										
		Interoffice Channel - Dedicated Transport - 4- Wire Voice Grade - Facility Termination			U1TVX	U1TV4	10.78	48.46	19.48	16.58	5.00						
		Interoffice Channel - Dedicated Transport - 56 kbps - per mile per month			U1TDX	1L5XX	0.0057										
		Interoffice Channel - Dedicated Transport - 56 kbps - Facility Termination			U1TDX	U1TD5	7.83	48.46	19.48	16.58	5.00						
		Interoffice Channel - Dedicated Transport - 64 kbps - per mile per month			U1TDX	1L5XX	0.0057										
		Interoffice Channel - Dedicated Transport - 64 kbps - Facility Termination			U1TDX	U1TD6	7.83	48.46	19.48	16.58	5.00						
		Interoffice Channel - Dedicated Channel - DS1 - Per Mile per month			U1TD1	1L5XX	0.1154										
		Interoffice Channel - Dedicated Tranport - DS1 - Facility Termination			U1TD1	U1TF1	34.19	111.03	80.28	31.36	21.73						
		Interoffice Channel - Dedicated Transport - DS3 - Per Mile per month			U1TD3	1L5XX	2.53										
		Interoffice Channel - Dedicated Transport - DS3 - Facility Termination per month			U1TD3	U1TF3	342.02	320.47	86.32	66.77	52.81						
		Interoffice Channel - Dedicated Transport - STS-1 - Per Mile per month			U1TS1	1L5XX	2.53										
		Interoffice Channel - Dedicated Transport - STS-1 - Facility Termination			U1TS1	U1TFS	358.67	320.47	86.32	66.77	52.81						
DARK FIBER																	
		Dark Fiber, Four Fiber Strands, Per Route Mile or Fraction Thereof per month - Interoffice Channel			UDF, UDFCX	1L5DF	23.29										
		NRC Dark Fiber - Interoffice Channel			UDF, UDFCX	UDF14		1,776.53	89.75	73.64	18.70						
		Dark Fiber, Four Fiber Strands, Per Route Mile or Fraction Thereof per month - Local Loop			UDF, UDFCX	1L5DL	46.84										
		NRC Dark Fiber - Local Loop			UDF, UDFCX	UDFL4		1,745.99	87.54	73.64	18.70						

UNBUNDLED NETWORK ELEMENTS - Georgia													Attachment: 2		Exhibit: A	
CATEGORY	RATE ELEMENTS	Interim	Zone	BCS	USOC	RATES ($)					Svc Order Submitted Elec per LSR	Svc Order Submitted Manually per LSR	Incremental Charge - Manual Svc Order vs. Electronic-1st	Incremental Charge - Manual Svc Order vs. Electronic-Add'l	Incremental Charge - Manual Svc Order vs. Electronic-Disc 1st	Incremental Charge - Manual Svc Order vs. Electronic-Disc Add'l
						Rec	Nonrecurring		Nonrecurring Disconnect		OSS Rates ($)					
							First	Add'l	First	Add'l	SOMEC	SOMAN	SOMAN	SOMAN	SOMAN	SOMAN
8XX ACCESS TEN DIGIT SCREENING																
	8XX Access Ten Digit Screening, Per Call			OHD		0.0008543										
	8XX Access Ten Digit Screening, Reservation Charge Per 8XX Number Reserved			OHD	N8R1X		2.50	0.43								
	8XX Access Ten Digit Screening, Per 8XX No. Established W/O POTS Translations			OHD			5.65	0.76	4.24	0.51						
	8XX Access Ten Digit Screening, Per 8XX No. Established With POTS Translations			OHD	N8FTX		5.65	0.76	4.24	0.51						
	8XX Access Ten Digit Screening, Customized Area of Service Per 8XX Number			OHD	N8FCX		2.50	1.25								
	8XX Access Ten Digit Screening, Multiple InterLATA CXR Routing Per CXR Requested Per 8XX No.			OHD	N8FMX		2.93	1.68								
	8XX Access Ten Digit Screening, Change Charge Per Request			OHD	N8FAX		2.93	0.43								
	8XX Access Ten Digit Screening, Call Handling and Destination Features			OHD	N8FDX		2.50									
	8XX Access Ten Digit Screening, w/8FL No. Delivery			OHD		0.0008543										
	8XX Access Ten Digit Screening, w/POTS No. Delivery			OHD		0.0008543										
LINE INFORMATION DATA BASE ACCESS (LIDB)																
	LIDB Common Transport Per Query			OQT		0.0000682										
	LIDB Validation Per Query			OQU		0.0266962										
	LIDB Originating Point Code Establishment or Change			OQT, OQU	NRBPX		33.24	33.24	39.35	39.35						
SIGNALING (CCS7)																
	CCS7 Signaling Connection, Per 56Kbps Facility			UDB	TPP++	8.73	34.77	34.77	16.91	16.91						
	CCS7 Signaling Termination, Per STP Port			UDB	PT8SX	108.80										
	CCS7 Signaling Usage, Per Call Setup Message			UDB		0.0000132										
	CCS7 Signaling Usage, Per TCAP Message			UDB		0.0000527										
	CCS7 Signaling Connection, Per link (A link) (same as E.3.1)			UDB	TPP++	8.73	34.77	34.77	16.91	16.91						
	CCS7 Signaling Connection, Per link (B link) (also known as D link) (same as E.3.1)			UDB	TPP++	8.73	34.77	34.77	16.91	16.91						
	CCS7 Signaling Usage, Per ISUP Message (same as E.3.3)			UDB		0.0000132										
	CCS7 Signaling Usage Surrogate, per link			UDB	STU56	907.44										
	CCS7 Signaling Point Code, Establishment or Change, per STP affected			UDB	CCAPO		28.15	28.15	33.32	33.32						
E911 SERVICE																
	Local Channel - Dedicated - 2-wr Voice Grade					7.74	121.07	53.30	46.40	13.37						
	Interoffice Transport - Dedicated - 2-wr Voice Grade Per Mile					0.0057										
	Interoffice Transport - Dedicated - 2-wr Voice Grade Per Facility Termination					12.87	48.46	19.48	16.58	5.00						
	Local Channel - Dedicated - DS1 - Zone 1					18.47	149.46	111.20	40.36	26.12						
	Local Channel - Dedicated - DS1 - Zone 2					56.30	149.46	111.20	40.36	26.12						
	Local Channel - Dedicated - DS1 - Zone 3					164.70	149.46	111.20	40.36	26.12						
	Interoffice Transport - Dedicated - DS1 Per Mile					0.1154										
	Interoffice Transport - Dedicated - DS1 Per Facility Termination					34.19	111.03	80.28	31.36	21.73						
CALLING NAME (CNAM) SERVICE																
	CNAM For DB Owners - Service Establishment			OQV			22.90		20.32							
	CNAM For Non DB Owners - Service Establishment			OQV			22.90		20.32							
	CNAM For DB Owners - Service Provisioning With Point Code Establishment			OQV			959.77	709.83	251.47	184.91						
	CNAM For Non DB Owners - Service Provisioning With Point Code Establishment			OQV			331.89	237.45	257.65	184.91						
	CNAM for DB Owners, Per Query			OQV		0.0009924										
	CNAM for Non DB Owners, Per Query			OQV		0.0009924										
	CNAM (Non-Databs Owner), NRC, applies when using the Character Based User Interface (CHUI)			OQV	CDDCH		595.00	595.00								
SELECTIVE ROUTING																
	Selective Routing Per Unique Line Class Code Per Request Per Switch						102.19	61.15	12.68	6.34						
VIRTUAL COLLOCATION																

UNBUNDLED NETWORK ELEMENTS - Georgia														Attachment: 2		Exhibit: A	
CATEGORY		RATE ELEMENTS	Interim	Zone	BCS	USOC	RATES ($)					Svc Order Submitted Elec per LSR	Svc Order Submitted Manually per LSR	Incremental Charge - Manual Svc Order vs. Electronic-1st	Incremental Charge - Manual Svc Order vs. Electronic-Add'l	Incremental Charge - Manual Svc Order vs. Electronic-Disc 1st	Incremental Charge - Manual Svc Order vs. Electronic-Disc Add'l
							Rec	Nonrecurring		Nonrecurring Disconnect		OSS Rates ($)					
								First	Add'l	First	Add'l	SOMEC	SOMAN	SOMAN	SOMAN	SOMAN	SOMAN
		Virtual Collocation-2 Wire Cross Connects (Loop) for Line Splitting			UEPSR UEPSB	VE1LS	0.0188	0.00	0.00	0.00	0.00						
PHYSICAL COLLOCATION																	
		Physical Collocation-2 Wire Cross Connects (Loop) for Line Splitting			UEPSR UEPSB	PE1LS	0.0197	0.00	0.00								
AIN SELECTIVE CARRIER ROUTING																	
		Regional Service Establishment			SRC	SRCEC		101,311.67	101,311.67	7,833.25	7,833.25						
		End Office Establishment			SRC	SRCEO		158.92	158.92	1.64	1.64						
		Line/Port NRC, per end user			SRC	SRCLP		2.06	2.06								
		Query NRC, per query			SRC		0.0020368										
AIN - BELLSOUTH AIN SMS ACCESS SERVICE																	
		AIN SMS Access Service - Service Establishment, Per State, Initial Setup			A1N	CAMSE		41.41	41.41	41.63	41.63						
		AIN SMS Access Service - Port Connection - Dial/Shared Access			A1N	CAMDP		8.15	8.15	9.16	9.16						
		AIN SMS Access Service - Port Connection - ISDN Access			A1N	CAM1P		8.15	8.15	9.16	9.16						
		AIN SMS Access Service - User Identification Codes - Per User ID Code			A1N	CAMAU		35.29	35.29	26.50	26.50						
		AIN SMS Access Service - Security Card, Per User ID Code, Initial or Replacement			A1N	CAMRC		40.24	40.24	11.72	11.72						
		AIN SMS Access Service - Storage, Per Unit (100 Kilobytes)					0.0038										
		AIN SMS Access Service - Session, Per Minute					1.81										
		AIN SMS Access Service - Company Performed Session, Per Minute					0.8323										
AIN - BELLSOUTH AIN TOOLKIT SERVICE																	
		AIN Toolkit Service - Service Establishment Charge, Per State, Initial Setup			CAM	BAPSC		41.41	41.41	41.63	41.63						
		AIN Toolkit Service - Training Session, Per Customer				BAPVX		4,236.62	4,236.62								
		AIN Toolkit Service - Trigger Access Charge, Per Trigger, Per DN, Term. Attempt				BAPTT		8.15	8.15	9.16	9.16						
		AIN Toolkit Service - Trigger Access Charge, Per Trigger, Per DN, Off-Hook Delay				BAPTD		8.15	8.15	9.16	9.16						
		AIN Toolkit Service - Trigger Access Charge, Per Trigger, Per DN, Off-Hook Immediate				BAPTM		8.15	8.15	9.16	9.16						
		AIN Toolkit Service - Trigger Access Charge, Per Trigger, Per DN, 10-Digit PODP				BAPTO		33.98	33.98	14.09	14.09						
		AIN Toolkit Service - Trigger Access Charge, Per Trigger, Per DN, CDP				BAPTC		33.98	33.98	14.09	14.09						
		AIN Toolkit Service - Trigger Access Charge, Per Trigger, Per DN, Feature Code				BAPTF		33.98	33.98	14.09	14.09						
		AIN Toolkit Service - Query Charge, Per Query					0.0271438										
		AIN Toolkit Service - Type 1 Node Charge, Per AIN Toolkit Subscription, Per Node, Per Query					0.0059195										
		AIN Toolkit Service - SCP Storage Charge, Per SMS Access Account, Per 100 Kilobytes					0.04										
		AIN Toolkit Service - Monthly report - Per AIN Toolkit Service Subscription			CAM	BAPMS	14.78	8.15	8.15	5.71	5.71						
		AIN Toolkit Service - Special Study - Per AIN Toolkit Service Subscription			CAM	BAPLS	6.46	8.98	8.98								
		AIN Toolkit Service - Call Event Report - Per AIN Toolkit Service Subscription			CAM	BAPDS	8.54	8.15	8.15	5.71	5.71						
		AIN Toolkit Service - Call Event Special Study - Per AIN Toolkit Service Subscription			CAM	BAPES	0.22	8.98	8.98								
ENHANCED EXTENDED LINK (EELs)																	
	NOTE: The monthly recurring and non-recurring charges below will apply and the Switch-As-Is Charge will not apply for UNE combinations provisioned as ' Ordinarily Combined' Network Elements.																
	NOTE: The monthly recurring and the Switch-As-Is Charge and not the non-recurring charges below will apply for UNE combinations provisioned as ' Currently Combined' Network Elements.																
	EXTENTED 2-WIRE VOICE GRADE EXTENDED LOOP WITH DEDICATED DS1 INTEROFFICE TRANSPORT																
		First 2-Wire VG Loop (SL2) in Combination - Zone 1		1	UNCVX	UEAL2	11.57	195.94	36.38	18.42	6.86						
		First 2-Wire VG Loop (SL2) in Combination - Zone 2		2	UNCVX	UEAL2	16.95	195.94	36.38	18.42	6.86						

CATEGORY	RATE ELEMENTS	Interim	Zone	BCS	USOC	RATES ($)					Svc Order Submitted Elec per LSR	Svc Order Submitted Manually per LSR	Attachment: 2 Incremental Charge - Manual Svc Order vs. Electronic-1st	Attachment: 2 Incremental Charge - Manual Svc Order vs. Electronic-Add'l	Exhibit: A Incremental Charge - Manual Svc Order vs. Electronic-Disc 1st	Exhibit: A Incremental Charge - Manual Svc Order vs. Electronic-Disc Add'l
						Rec	Nonrecurring		Nonrecurring Disconnect		OSS Rates ($)					
							First	Add'l	First	Add'l	SOMEC	SOMAN	SOMAN	SOMAN	SOMAN	SOMAN
	First 2-Wire VG Loop (SL2) in Combination - Zone 3		3	UNCVX	UEAL2	33.08	195.94	36.38	18.42	6.86						
	Interoffice Transport - Dedicated - DS1 combination - Per Mile per month			UNC1X	1L5XX	0.1154										
	Interoffice Transport - Dedicated - DS1 combination - Facility Termination per month			UNC1X	U1TF1	34.19	87.76	45.73	43.80	27.97						
	1/0 Channelization System in combination Per Month			UNC1X	MQ1	69.75	86.10									
	Voice Grade COCI - Per Month			UNCVX	1D1VG	0.4689	27.33	2.90	16.86	1.04						
	Each Additional 2-Wire VG Loop (SL 2) in Combination - Zone 1		1	UNCVX	UEAL2	11.57	195.94	36.38	18.42	6.86						
	Each Additional 2-Wire VG Loop (SL 2) in Combination - Zone 2		2	UNCVX	UEAL2	16.95	195.94	36.38	18.42	6.86						
	Each Additional 2-Wire VG Loop (SL 2) in Combination - Zone 3		3	UNCVX	UEAL2	33.08	195.94	36.38	18.42	6.86						
	Voice Grade COCI - Per Month			UNCVX	1D1VG	0.4689	27.33	2.90	16.86	1.04						
	Nonrecurring Currently Combined Network Elements Switch -As-Is Charge			UNC1X	UNCCC		5.70	5.70	6.61	6.61						
	EXTENDED 4-WIRE VOICE GRADE EXTENDED LOOP WITH DEDICATED DS1 INTEROFFICE TRANSPORT															
	First 4-Wire Analog Voice Grade Loop in Combination - Zone 1		1	UNCVX	UEAL4	17.80	195.94	36.38	18.42	6.86						
	First 4-Wire Analog Voice Grade Loop in Combination - Zone 2		2	UNCVX	UEAL4	21.68	195.94	36.38	18.42	6.86						
	First 4-Wire Analog Voice Grade Loop in Combination - Zone 3		3	UNCVX	UEAL4	30.25	195.94	36.38	18.42	6.86						
	Interoffice Transport - Dedicated - DS1 combination - Per Mile Per Month			UNC1X	1L5XX	0.1154										
	Interoffice Transport - Dedicated - DS1 - Facility Termination Per Month			UNC1X	U1TF1	34.19	87.76	45.73	43.80	27.97						
	1/0 Channel System in combination Per Month			UNC1X	MQ1	69.75	86.10									
	Voice Grade COCI in combination - per month			UNCVX	1D1VG	0.4689	27.33	2.90	16.86	1.04						
	Additional 4-Wire Analog Voice Grade Loop in same DS1 Interoffice Transport Combination - Zone 1		1	UNCVX	UEAL4	17.80	195.94	36.38	18.42	6.86						
	Additional 4-Wire Analog Voice Grade Loop in same DS1 Interoffice Transport Combination - Zone 2		2	UNCVX	UEAL4	21.68	195.94	36.38	18.42	6.86						
	Additional 4-Wire Analog Voice Grade Loop in same DS1 Interoffice Transport Combination - Zone 3		3	UNCVX	UEAL4	30.25	195.94	36.38	18.42	6.86						
	Additional Voice Grade COCI in combination - per month			UNCVX	1D1VG	0.4689	27.33	2.90	16.86	1.04						
	Nonrecurring Currently Combined Network Elements Switch -As-Is Charge			UNC1X	UNCCC		5.70	5.70	6.61	6.61						
	EXTENDED 4-WIRE 56 KBPS EXTENDED DIGITAL LOOP WITH DEDICATED DS1 INTEROFFICE TRANSPORT															
	First 4-Wire 56Kbps Digital Grade Loop in Combination - Zone 1		1	UNCDX	UDL56	21.86	195.94	36.38	18.42	6.86						
	First 4-Wire 56Kbps Digital Grade Loop in Combination - Zone 2		2	UNCDX	UDL56	28.36	195.94	36.38	18.42	6.86						
	First 4-Wire 56Kbps Digital Grade Loop in Combination - Zone 3		3	UNCDX	UDL56	38.22	195.94	36.38	18.42	6.86						
	Interoffice Transport - Dedicated - DS1 combination - Per Mile Per Month			UNC1X	1L5XX	0.1154										
	Interoffice Transport - Dedicated - DS1 - combination Facility Termination Per Month			UNC1X	U1TF1	34.19	87.76	45.73	43.80	27.97						
	1/0 Channel System in combination Per Month			UNC1X	MQ1	69.75	86.10									
	OCU-DP COCI (data) per month (2.4-64kbs)			UNCDX	1D1DD	0.9963	27.33	2.90	16.86	1.04						
	Additional 4-Wire 56Kbps Digital Grade Loop in same DS1 Interoffice Transport Combination - Zone 1		1	UNCDX	UDL56	21.86	195.94	36.38	18.42	6.86						
	Additional 4-Wire 56Kbps Digital Grade Loop in same DS1 Interoffice Transport Combination - Zone 2		2	UNCDX	UDL56	28.36	195.94	36.38	18.42	6.86						
	Additional 4-Wire 56Kbps Digital Grade Loop in same DS1 Interoffice Transport Combination - Zone 3		3	UNCDX	UDL56	38.22	195.94	36.38	18.42	6.86						
	Additional OCU-DP COCI (data) - in combination per month (2.4-64kbs)			UNCDX	1D1DD	0.9963	27.33	2.90	16.86	1.04						

UNBUNDLED NETWORK ELEMENTS - Georgia														Attachment: 2		Exhibit: A	
CATEGORY		RATE ELEMENTS	Interim	Zone	BCS	USOC	RATES ($)					Svc Order Submitted Elec per LSR	Svc Order Submitted Manually per LSR	Incremental Charge - Manual Svc Order vs. Electronic-1st	Incremental Charge - Manual Svc Order vs. Electronic-Add'l	Incremental Charge - Manual Svc Order vs. Electronic-Disc 1st	Incremental Charge - Manual Svc Order vs. Electronic-Disc Add'l
							Rec	Nonrecurring		Nonrecurring Disconnect		OSS Rates ($)					
								First	Add'l	First	Add'l	SOMEC	SOMAN	SOMAN	SOMAN	SOMAN	SOMAN
		Nonrecurring Currently Combined Network Elements Switch -As-Is Charge			UNC1X	UNCCC		5.70	5.70	6.61	6.61						
	EXTENDED 4-WIRE 64 KBPS EXTENDED DIGITAL LOOP WITH DEDICATED DS1 INTEROFFICE TRANSPORT																
		First 4-Wire 64Kbps Digital Grade Loop in Combination - Zone 1		1	UNCDX	UDL64	21.86	195.94	36.38	18.42	6.86						
		First 4-Wire 64Kbps Digital Grade Loop in Combination - Zone 2		2	UNCDX	UDL64	28.36	195.94	36.38	18.42	6.86						
		First 4-Wire 64Kbps Digital Grade Loop in Combination - Zone 3		3	UNCDX	UDL64	38.22	195.94	36.38	18.42	6.86						
		Interoffice Transport - Dedicated - DS1 combination - Per Mile Per Month			UNC1X	1L5XX	0.1154										
		interoffice Transport - Dedicated - DS1 combination - Facility Termination Per Month			UNC1X	U1TF1	34.19	87.76	45.73	43.80	27.97						
		1/0 Channel System in combination Per Month			UNC1X	MQ1	69.75	86.10									
		OCU-DP COCI (data) - in combination - per month (2.4-64kbs)			UNCDX	1D1DD	0.9963	27.33	2.90	16.86	1.04						
		Additional 4-Wire 64Kbps Digital Grade Loop in same DS1 Interoffice Transport Combination - Zone 1		1	UNCDX	UDL64	21.86	195.94	36.38	18.42	6.86						
		Additional 4-Wire 64Kbps Digital Grade Loop in same DS1 Interoffice Transport Combination - Zone 2		2	UNCDX	UDL64	28.36	195.94	36.38	18.42	6.86						
		Additional 4-Wire 64Kbps Digital Grade Loop in same DS1 Interoffice Transport Combination - Zone 3		3	UNCDX	UDL64	38.22	195.94	36.38	18.42	6.86						
		Additional OCU-DP COCI (data) - in combination - per month (2.4-64kbs)			UNCDX	1D1DD	0.9963	27.33	2.90	16.86	1.04						
		Nonrecurring Currently Combined Network Elements Switch -As-Is Charge			UNC1X	UNCCC		5.70	5.70	6.61	6.61						
	EXTENDED 4-WIRE DS1 DIGITAL EXTENDED LOOP WITH DEDICATED DS1 INTEROFFICE TRANSPORT																
		4-Wire DS1 Digital Loop in Combination - Zone 1		1	UNC1X	USLXX	41.02	209.45	70.44	37.91	6.86						
		4-Wire DS1 Digital Loop in Combination - Zone 2		2	UNC1X	USLXX	46.41	209.45	70.44	37.91	6.86						
		4-Wire DS1 Digital Loop in Combination - Zone 3		3	UNC1X	USLXX	62.03	209.45	70.44	37.91	6.86						
		Interoffice Transport - Dedicated - DS1 combination - Per Mile Per Month			UNC1X	1L5XX	0.1154										
		Interoffice Transport - Dedicated - DS1 combination - Facility Termination Per Month			UNC1X	U1TF1	34.19	87.76	45.73	43.80	27.97						
		Nonrecurring Currently Combined Network Elements Switch -As-Is Charge			UNC1X	UNCCC		5.70	5.70	6.61	6.61						
	EXTENDED 4-WIRE DS1 DIGITAL EXTENDED LOOP WITH DEDICATED DS3 INTEROFFICE TRANSPORT																
		First DS1Loop in Combination - Zone 1		1	UNC1X	USLXX	41.02	209.45	70.44	37.91	6.86						
		First DS1Loop in Combination - Zone 2		2	UNC1X	USLXX	46.41	209.45	70.44	37.91	6.86						
		First DS1Loop in Combination - Zone 3		3	UNC1X	USLXX	62.03	209.45	70.44	37.91	6.86						
		Interoffice Transport - Dedicated - DS3 combination - Per Mile Per Month			UNC3X	1L5XX	2.53										
		Interoffice Transport - Dedicated - DS3 - Facility Termination per month			UNC3X	U1TF3	342.02	325.91	77.07	49.56	32.88						
		3/1Channel System in combination per month			UNC3X	MQ3	121.90										
		DS1 COCI in combination per month			UNC1X	UC1D1	7.35	27.33	2.90	16.86	1.04						
		Additional DS1Loop in DS3 Interoffice Transport Combination - Zone 1		1	UNC1X	USLXX	41.02	209.45	70.44	37.91	6.86						
		Additional DS1Loop in DS3 Interoffice Transport Combination - Zone 2		2	UNC1X	USLXX	46.41	209.45	70.44	37.91	6.86						
		Additional DS1Loop in DS3 Interoffice Transport Combination - Zone 3		3	UNC1X	USLXX	62.03	209.45	70.44	37.91	6.86						
		Additoinal DS1 COCI in combination per month			UNC1X	UC1D1	7.35	27.33	2.90	16.86	1.04						
		Nonrecurring Currently Combined Network Elements Switch -As-Is Charge			UNC3X	UNCCC		5.70	5.70	6.61	6.61						
	EXTENDED 2-WIRE VOICE GRADE EXTENDED LOOP/ 2 WIRE VOICE GRADE INTEROFFICE TRANSPORT																
		2-WireVG Loop in combination - Zone 1		1	UNCVX	UEAL2	11.57	195.94	36.38	18.42	6.86						
		2-WireVG Loop in combination - Zone 2		2	UNCVX	UEAL2	16.95	195.94	36.38	18.42	6.86						
		2-WireVG Loop in combination - Zone 3		3	UNCVX	UEAL2	33.08	195.94	36.38	18.42	6.86						

CATEGORY	RATE ELEMENTS	Interim	Zone	BCS	USOC	RATES ($)					Svc Order Submitted Elec per LSR	Svc Order Submitted Manually per LSR	Attachment: 2 Incremental Charge - Manual Svc Order vs. Electronic-1st	Attachment: 2 Incremental Charge - Manual Svc Order vs. Electronic-Add'l	Exhibit: A Incremental Charge - Manual Svc Order vs. Electronic-Disc 1st	Exhibit: A Incremental Charge - Manual Svc Order vs. Electronic-Disc Add'l
						Rec	Nonrecurring		Nonrecurring Disconnect		OSS Rates ($)					
							First	Add'l	First	Add'l	SOMEC	SOMAN	SOMAN	SOMAN	SOMAN	SOMAN
	Interoffice Transport - 2-wire VG - Dedicated- Per Mile Per Month			UNCVX	1L5XX	0.0057										
	Interoffice Transport - 2-wire VG - Dedicated - Facility Termination per month			UNCVX	U1TV2	12.87	66.53	33.61	43.42	27.60						
	Nonrecurring Currently Combined Network Elements Switch -As-Is Charge			UNCVX	UNCCC		5.70	5.70	6.61	6.61						
	EXTENDED 4-WIRE VOICE GRADE EXTENDED LOOP/ 4 WIRE VOICE GRADE INTEROFFICE TRANSPORT															
	4-WireVG Loop in combination - Zone 1		1	UNCVX	UEAL4	17.80	195.94	36.38	18.42	6.86						
	4-WireVG Loop in combination - Zone 2		2	UNCVX	UEAL4	21.68	195.94	36.38	18.42	6.86						
	4-WireVG Loop in combination - Zone 3		3	UNCVX	UEAL4	30.25	195.94	36.38	18.42	6.86						
	Interoffice Transport - 4-wire VG - Dedicated - Per Mile Per Month			UNCVX	1L5XX	0.0057										
	Interoffice Transport - 4-wire VG - Dedicated - Facility Termination per month			UNCVX	U1TV4	10.78	66.53	33.61	43.42	27.60						
	Nonrecurring Currently Combined Network Elements Switch -As-Is Charge			UNCVX	UNCCC		5.70	5.70	6.61	6.61						
	EXTENDED DS3 DIGITAL EXTENDED LOOP WITH DEDICATED DS3 INTEROFFICE TRANSPORT															
	DS3 Local Loop in combination - per mile per month			UNC3X	1L5ND	10.97										
	DS3 Local Loop in combination - Facility Termination per month			UNC3X	UE3PX	253.38	1,260.47	628.84	41.53	20.76						
	Interoffice Transport - Dedicated - DS3 - Per Mile per month			UNC3X	1L5XX	2.53										
	Interoffice Transport - Dedicated - DS3 combination - Facility Termination per month			UNC3X	U1TF3	342.02	325.91	77.07	49.56	32.88						
	Nonrecurring Currently Combined Network Elements Switch -As-Is Charge			UNC3X	UNCCC		5.70	5.70	6.61	6.61						
	EXTENDED STS-1 DIGITAL EXTENDED LOOP WITH DEDICATED STS-1 INTEROFFICE TRANSPORT															
	STS-1 Local Lolp in combination - per mile per month			UNCSX	1L5ND	10.97										
	STS-1 Local Loop in combination - Facility Termination per month			UNCSX	UDLS1	305.42	1,260.47	628.84	41.53	20.76						
	Interoffice Transport - Dedicated - STS-1 combination - per mile per month			UNCSX	1L5XX	2.53										
	Interoffice Transport - Dedicated - STS-1 combination - Facility Termination per month			UNCSX	U1TFS	358.67	325.91	77.07	49.56	32.88						
	Nonrecurring Currently Combined Network Elements Switch -As-Is Charge			UNCSX	UNCCC		5.70	5.70	6.61	6.61						
	EXTENDED 2-WIRE ISDN EXTENDED LOOP WITH DS1 INTEROFFICE TRANSPORT															
	First 2-Wire ISDN Loop in Combination - Zone 1		1	UNCNX	U1L2X	19.82	195.94	36.38	18.42	6.86						
	First 2-Wire ISDN Loop in Combination - Zone 2		2	UNCNX	U1L2X	26.26	195.94	36.38	18.42	6.86						
	First 2-Wire ISDN Loop in Combination - Zone 3		3	UNCNX	U1L2X	42.17	195.94	36.38	18.42	6.86						
	Interoffice Transport - Dedicated - DS1 combination - per mile per month			UNC1X	1L5XX	0.1154										
	Interoffice Transport - Dedicated - DS1 combination - Facility Termination per month			UNC1X	U1TF1	34.19	87.76	45.73	43.80	27.97						
	1/0 Channel System in combination - per month			UNC1X	MQ1	69.75	86.10									
	2-wire ISDN COCI (BRITE) - in combination - per month			UNCNX	UC1CA	1.66	27.33	2.90	16.86	1.04						
	Additional 2-wire ISDN Loop in same DS1Interoffice Transport Combination - Zone 1		1	UNCNX	U1L2X	19.82	195.94	36.38	18.42	6.86						
	Additional 2-wire ISDN Loop in same DS1Interoffice Transport Combination - Zone 2		2	UNCNX	U1L2X	26.26	195.94	36.38	18.42	6.86						
	Additional 2-wire ISDN Loop in same DS1Interoffice Transport Combination - Zone 3		3	UNCNX	U1L2X	42.17	195.94	36.38	18.42	6.86						
	Additional 2-wire ISDN COCI (BRITE) - in combination- per month			UNCNX	UC1CA	1.66	27.33	2.90	16.86	1.04						
	Nonrecurring Currently Combined Network Elements Switch -As-Is Charge			UNC1X	UNCCC		5.70	5.70	6.61	6.61						
	EXTENDED 4-WIRE DS1 DIGITAL EXTENDED LOOP WITH DEDICATED STS-1 INTEROFFICE TRANSPORT															
	First DS1 Loop Combination - Zone 1		1	UNC1X	USLXX	41.02	209.45	70.44	37.91	6.86						
	First DS1 Loop Combination - Zone 2		2	UNC1X	USLXX	46.41	209.45	70.44	37.91	6.86						
	First DS1 Loop Combination - Zone 3		3	UNC1X	USLXX	62.03	209.45	70.44	37.91	6.86						

CATEGORY	RATE ELEMENTS	Interim	Zone	BCS	USOC	RATES ($)					Svc Order Submitted Elec per LSR	Svc Order Submitted Manually per LSR	Attachment: 2 Incremental Charge - Manual Svc Order vs. Electronic-1st	Attachment: 2 Incremental Charge - Manual Svc Order vs. Electronic-Add'l	Exhibit: A Incremental Charge - Manual Svc Order vs. Electronic-Disc 1st	Exhibit: A Incremental Charge - Manual Svc Order vs. Electronic-Disc Add'l
						Rec	Nonrecurring		Nonrecurring Disconnect		OSS Rates ($)					
							First	Add'l	First	Add'l	SOMEC	SOMAN	SOMAN	SOMAN	SOMAN	SOMAN
	Interoffice Transport - Dedicated - STS-1 combination - Per Mile Per Month			UNCSX	1L5XX	2.53										
	Interoffice Transport - Dedicated - STS-1 combination - Facility Termination per month			UNCSX	U1TFS	358.67	325.91	77.07	49.56	32.88						
	3/1 Channel System in combination per month			UNCSX	MQ3	121.90										
	DS1 COCI in combination per month			UNC1X	UC1D1	7.35	27.33	2.90	16.86	1.04						
	Additional DS1Loop in the same STS-1 Interoffice Transport Combination - Zone 1		1	UNC1X	USLXX	41.02	209.45	70.44	37.91	6.86						
	Additional DS1Loop in the same STS-1 Interoffice Transport Combination - Zone 2		2	UNC1X	USLXX	46.41	209.45	70.44	37.91	6.86						
	Additional DS1Loop in the same STS-1 Interoffice Transport Combination - Zone 3		3	UNC1X	USLXX	62.03	209.45	70.44	37.91	6.86						
	DS1 COCI in combination per month			UNC1X	UC1D1	7.35	27.33	2.90	16.86	1.04						
	Nonrecurring Currently Combined Network Elements Switch -As-Is Charge			UNCSX	UNCCC		5.70	5.70	6.61	6.61						
	EXTENDED 4-WIRE 56 KBPS DIGITAL EXTENDED LOOP WITH 56 KBPS INTEROFFICE TRANSPORT															
	4-wire 56 kbps Local Loop in combination - Zone 1		1	UNCDX	UDL56	21.86	195.94	36.38	18.42	6.86						
	4-wire 56 kbps Local Loop in combination - Zone 2		2	UNCDX	UDL56	28.36	195.94	36.38	18.42	6.86						
	4-wire 56 kbps Local Loop in combination - Zone 3		3	UNCDX	UDL56	38.22	195.94	36.38	18.42	6.86						
	Interoffice Transport - Dedicated - 4-wire 56 kbps combination - Per Mile per month			UNCDX	1L5XX	0.0057										
	Interoffice Transport - Dedicated - 4-wire 56 kbps combination - Facility Termination per month			UNCDX	U1TD5	7.83	66.53	33.61	43.42	27.60						
	Nonrecurring Currently Combined Network Elements Switch -As-Is Charge			UNCDX	UNCCC		5.70	5.70	6.61	6.61						
	EXTENDED 4-WIRE 64 KBPS DIGITAL EXTENDED LOOP WITH 64 KBPS INTEROFFICE TRANSPORT															
	4-wire 64 kbps Lcoal Loop in Combination - Zone 1		1	UNCDX	UDL64	21.86	195.94	36.38	18.42	6.86						
	4-wire 64 kbps Lcoal Loop in Combination - Zone 2		2	UNCDX	UDL64	28.36	195.94	36.38	18.42	6.86						
	4-wire 64 kbps Lcoal Loop in Combination - Zone 3		3	UNCDX	UDL64	38.22	195.94	36.38	18.42	6.86						
	Interoffice Transport - Dedicated - 4-wire 64 kbps combination - Per Mile per month			UNCDX	1L5XX	0.0057										
	Interoffice Transport - Dedicated - 4-wire 64 kbps combination - Facility Termination per month			UNCDX	U1TD6	7.83	66.53	33.61	43.42	27.60						
	Nonrecurring Currently Combined Network Elements Switch -As-Is Charge			UNCDX	UNCCC		5.70	5.70	6.61	6.61						
	EXTENDED 2-WIRE VOICE GRADE LOOP WITH DS1 INTEROFFICE TRANSPORT w/ 3/1 MUX															
	First 2-wire VG Loop (SL2) in Combination - Zone 1		1	UNCVX	UEAL2	11.57	195.94	36.38	18.42	6.86						
	First 2-wire VG Loop (SL2) in Combination - Zone 2		2	UNCVX	UEAL2	16.95	195.94	36.38	18.42	6.86						
	First 2-wire VG Loop (SL2) in Combination - Zone 3		3	UNCVX	UEAL2	33.08	195.94	36.38	18.42	6.86						
	First Interoffice Transport - Dedicated - DS1 combination - Per Mile			UNC1X	1L5XX	0.1154										
	First Interoffice Transport - Dedicated - DS1 combination - Facility Termination per month			UNC1X	U1TF1	34.19	87.76	45.73	43.80	27.97						
	Per each DS1 Channelization System Per Month			UNC1X	MQ1	69.75	86.10									
	Per each Voice Grade COCI - Per Month per month			UNCVX	1D1VG	0.4689	27.33	2.90	16.86	1.04						
	3/1 Channel System in combination per month			UNC3X	MQ3	121.90										
	Per each DS1 COCI in combination per month			UNC1X	UC1D1	7.35	27.33	2.90	16.86	1.04						
	Each Additional 2-Wire VG Loop(SL 2) in the same DS1 Interoffice Transport Combination - Zone 1		1	UNCVX	UEAL2	11.57	195.94	36.38	18.42	6.86						
	Each Additional 2-Wire VG Loop(SL2) in the same DS1 Interoffice Transport Combination - Zone 2		2	UNCVX	UEAL2	16.95	195.94	36.38	18.42	6.86						
	Each Additional 2-Wire VG Loop(SL2) in the same DS1 Interoffice Transport Combination - Zone 3		3	UNCVX	UEAL2	33.08	195.94	36.38	18.42	6.86						
	Each Additional Voice Grade COCI in combination - per month			UNCVX	1D1VG	0.4689	27.33	2.90	16.86	1.04						
	Each Additional DS1 Interoffice Channel per mile in same 3/1 Channel System per month			UNC1X	1L5XX	0.1154										
	Each Additional DS1 Interoffice Channel Facility Termination in same 3/1 Channel System per month			UNC1X	U1TF1	34.19	87.76	45.73	43.80	27.97						
	Each Additional DS1 COCI combination per month			UNC1X	UC1D1	7.35	27.33	2.90	16.86	1.04						

CATEGORY		RATE ELEMENTS	Interim	Zone	BCS	USOC	RATES ($)					Svc Order Submitted Elec per LSR	Svc Order Submitted Manually per LSR	Attachment: 2 Incremental Charge - Manual Svc Order vs. Electronic-1st	Attachment: 2 Incremental Charge - Manual Svc Order vs. Electronic-Add'l	Exhibit: A Incremental Charge - Manual Svc Order vs. Electronic-Disc 1st	Exhibit: A Incremental Charge - Manual Svc Order vs. Electronic-Disc Add'l
							Rec	Nonrecurring		Nonrecurring Disconnect		OSS Rates ($)					
								First	Add'l	First	Add'l	SOMEC	SOMAN	SOMAN	SOMAN	SOMAN	SOMAN
		Nonrecurring Currently Combined Network Elements Switch -As-Is Charge			UNC1X	UNCCC		5.70	5.70	6.61	6.61						
	EXTENDED 4-WIRE VOICE GRADE LOOP WITH DEDICATED DS1 INTEROFFICE TRANSPORT w/ 3/1 MUX																
		First 4-Wire Analog Voice Grade Local Loop in Combination - Zone 1		1	UNCVX	UEAL4	17.80	195.94	36.38	18.42	6.86						
		First 4-Wire Analog Voice Grade Local Loop in Combination - Zone 2		2	UNCVX	UEAL4	21.68	195.94	36.38	18.42	6.86						
		First 4-Wire Analog Voice Grade Local Loop in Combination - Zone 3		3	UNCVX	UEAL4	30.25	195.94	36.38	18.42	6.86						
		First Interoffice Transport - Dedicated - DS1 combination - Per Mile Per Month			UNC1X	1L5XX	0.1154										
		First Interoffice Transport - Dedicated - DS1 - Facility Termination Per Month			UNC1X	U1TF1	34.19	87.76	45.73	43.80	27.97						
		Per each 1/0 Channel System in combination Per Month			UNC1X	MQ1	69.75	86.10									
		Per each Voice Grade COCI in combination - per month			UNCVX	1D1VG	0.4689	27.33	2.90	16.86	1.04						
		3/1 Channel System in combination per month			UNC3X	MQ3	121.90										
		Per each DS1 COCI in combination per month			UNC1X	UC1D1	7.35	27.33	2.90	16.86	1.04						
		Additional 4-Wire Analog Voice Grade Loop in same DS1 Interoffice Transport Combination - Zone 1		1	UNCVX	UEAL4	17.80	195.94	36.38	18.42	6.86						
		Additional 4-Wire Analog Voice Grade Loop in same DS1 Interoffice Transport Combination - Zone 2		2	UNCVX	UEAL4	21.68	195.94	36.38	18.42	6.86						
		Additional 4-Wire Analog Voice Grade Loop in same DS1 Interoffice Transport Combination - Zone 3		3	UNCVX	UEAL4	30.25	195.94	36.38	18.42	6.86						
		Each Additional DS1 Interoffice Channel per mile in same 3/1 Channel System per month			UNC1X	1L5XX	0.1154										
		Each Additional DS1 Interoffice Channel Facility Termination in same 3/1 Channel System per month			UNC1X	U1TF1	34.19	87.76	45.73	43.80	27.97						
		Additional Voice Grade COCI - in combination - per month			UNCVX	1D1VG	0.4689	27.33	2.90	16.86	1.04						
		Nonrecurring Currently Combined Network Elements Switch -As-Is Charge			UNC1X	UNCCC		5.70	5.70	6.61	6.61						
	EXTENDED 4-WIRE 56 KBPS DIGITAL EXTENDED LOOP WITH 56 KBPS INTEROFFICE TRANSPORT w/ 3/1 MUX																
		First 4-Wire 56Kbps Digital Grade Local Loop in Combination - Zone 1		1	UNCDX	UDL56	21.86	195.94	36.38	18.42	6.86						
		First 4-Wire 56Kbps Digital Grade Local Loop in Combination - Zone 2		2	UNCDX	UDL56	28.36	195.94	36.38	18.42	6.86						
		First 4-Wire 56Kbps Digital Grade Local Loop in Combination - Zone 3		3	UNCDX	UDL56	38.22	195.94	36.38	18.42	6.86						
		First Interoffice Transport - Dedicated - DS1 combination - Per Mile Per Month			UNC1X	1L5XX	0.1154										
		First Interoffice Transport - Dedicated - DS1 - combination Facility Termination Per Month			UNC1X	U1TF1	34.19	87.76	45.73	43.80	27.97						
		Per each 1/0 Channel System in combination Per Month			UNC1X	MQ1	69.75	86.10									
		Per each OCU-DP COCI (data) COCI per month (2.4-64kbs)			UNCDX	1D1DD	0.9963	27.33	2.90	16.86	1.04						
		3/1 Channel System in combination per month			UNC3X	MQ3	121.90										
		Per each DS1 COCI in combination per month			UNC1X	UC1D1	7.35	27.33	2.90	16.86	1.04						
		Additional 4-Wire 56Kbps Digital Grade Loop in same DS1 Interoffice Transport Combination - Zone 1		1	UNCDX	UDL56	21.86	195.94	36.38	18.42	6.86						
		Additional 4-Wire 56Kbps Digital Grade Loop in same DS1 Interoffice Transport Combination - Zone 2		2	UNCDX	UDL56	28.36	195.94	36.38	18.42	6.86						
		Additional 4-Wire 56Kbps Digital Grade Loop in same DS1 Interoffice Transport Combination - Zone 3		3	UNCDX	UDL56	38.22	195.94	36.38	18.42	6.86						
		OCU-DP COCI (data) COCI in combination per month (2.4-64kbs)			UNCDX	1D1DD	0.9963	27.33	2.90	16.86	1.04						
		Each Additional DS1 Interoffice Channel per mile in same 3/1 Channel System per month			UNC1X	1L5XX	0.1154										
		Each Additional DS1 Interoffice Channel Facility Termination in same 3/1 Channel System per month			UNC1X	U1TF1	34.19	87.76	45.73	43.80	27.97						
		Each Additional DS1 COCI in the same 3/1 channel system combination per month			UNC1X	UC1D1	7.35	27.33	2.90	16.86	1.04						

UNBUNDLED NETWORK ELEMENTS - Georgia														Attachment: 2		Exhibit: A	
CATEGORY		RATE ELEMENTS	Interim	Zone	BCS	USOC	RATES ($)					Svc Order Submitted Elec per LSR	Svc Order Submitted Manually per LSR	Incremental Charge - Manual Svc Order vs. Electronic-1st	Incremental Charge - Manual Svc Order vs. Electronic-Add'l	Incremental Charge - Manual Svc Order vs. Electronic-Disc 1st	Incremental Charge - Manual Svc Order vs. Electronic-Disc Add'l
							Rec	Nonrecurring		Nonrecurring Disconnect		OSS Rates ($)					
								First	Add'l	First	Add'l	SOMEC	SOMAN	SOMAN	SOMAN	SOMAN	SOMAN
		Nonrecurring Currently Combined Network Elements Switch -As-Is Charge			UNC1X	UNCCC		5.70	5.70	6.61	6.61						
	EXTENDED 4-WIRE 64 KBPS DIGITAL LOOP WITH DEDICATED DS1 INTEROFFICE TRANSPORT w/ 3/1 MUX																
		First 4-Wire 64Kbps Digital Grade Loop in a DS1 Interoffice Transport Combination - Zone 1		1	UNCDX	UDL64	21.86	195.94	36.38	18.42	6.86						
		First 4-Wire 64Kbps Digital Grade Loop in a DS1 Interoffice Transport Combination - Zone 2		2	UNCDX	UDL64	28.36	195.94	36.38	18.42	6.86						
		First 4-Wire 64Kbps Digital Grade Loop in a DS1 Interoffice Transport Combination - Zone 3		3	UNCDX	UDL64	38.22	195.94	36.38	18.42	6.86						
		First Interoffice Transport - Dedicated - DS1 combination - Per Mile Per Month			UNC1X	1L5XX	0.1154										
		First Interoffice Transport - Dedicated - DS1 combination - Facility Termination Per Month			UNC1X	U1TF1	34.19	87.76	45.73	43.80	27.97						
		Per each Channel System 1/0 in combination Per Month			UNC1X	MQ1	69.75	86.10									
		Per each OCU-DP COCI (data) in combination - per month (2.4-64kbs)			UNCDX	1D1DD	0.9963	27.33	2.90	16.86	1.04						
		3/1 Channel System in combination per month			UNC3X	MQ3	121.90										
		Per each DS1 COCI in combination per month			UNC1X	UC1D1	7.35	27.33	2.90	16.86	1.04						
		Additional 4-Wire 64Kbps Digital Grade Loop in same DS1 Interoffice Transport Combination - Zone 1		1	UNCDX	UDL64	21.86	195.94	36.38	18.42	6.86						
		Additional 4-Wire 64Kbps Digital Grade Loop in same DS1 Interoffice Transport Combination - Zone 2		2	UNCDX	UDL64	28.36	195.94	36.38	18.42	6.86						
		Additional 4-Wire 64Kbps Digital Grade Loop in same DS1 Interoffice Transport Combination - Zone 3		3	UNCDX	UDL64	38.22	195.94	36.38	18.42	6.86						
		Additional OCU-DP COCI (data) - DS1 to DS0 Channel System combination - per month (2.4-64kbs)			UNCDX	1D1DD	0.9963	27.33	2.90	16.86	1.04						
		Each Additional DS1 Interoffice Channel per mile in same 3/1 Channel System per month			UNC1X	1L5XX	0.1154										
		Each Additional DS1 Interoffice Channel Facility Termination in same 3/1 Channel System per month			UNC1X	U1TF1	34.19	87.76	45.73	43.80	27.97						
		Each Additional DS1 COCI in the same 3/1 channel system combination per month			UNC1X	UC1D1	7.35	27.33	2.90	16.86	1.04						
		Nonrecurring Currently Combined Network Elements Switch -As-Is Charge			UNC1X	UNCCC		5.70	5.70	6.61	6.61						
	EXTENDED 2-WIRE ISDN LOOP WITH DS1 INTEROFFICE TRANSPORT w/ 3/1 MUX																
		First 2-Wire ISDN Loop in a DS1 Interoffice Combination Transport - Zone 1		1	UNCNX	U1L2X	19.82	195.94	36.38	18.42	6.86						
		First 2-Wire ISDN Loop in a DS1 Interoffice Combination Transport - Zone 2		2	UNCNX	U1L2X	26.26	195.94	36.38	18.42	6.86						
		First 2-Wire ISDN Loop in a DS1 Interoffice Combination Transport - Zone 3		3	UNCNX	U1L2X	42.17	195.94	36.38	18.42	6.86						
		First Interoffice Transport - Dedicated - DS1 combination - Per Mile per month			UNC1X	1L5XX	0.1154										
		First Interoffice Transport - Dedicated - DS1 combination - Facility Termination per month			UNC1X	U1TF1	34.19	87.76	45.73	43.80	27.97						
		Per each Channel System 1/0 in combination - per month			UNC1X	MQ1	69.75	86.10									
		Per each 2-wire ISDN COCI (BRITE) in combination - per month			UNCNX	UC1CA	1.66	27.33	2.90	16.86	1.04						
		3/1 Channel System in combination per month			UNC3X	MQ3	121.90										
		Per each DS1 COCI in combination per month			UNC1X	UC1D1	7.35	27.33	2.90	16.86	1.04						
		Additional 2-wire ISDN Loop in same DS1Interoffice Transport Combination - Zone 1		1	UNCNX	U1L2X	19.82	195.94	36.38	18.42	6.86						
		Additional 2-wire ISDN Loop in same DS1Interoffice Transport Combination - Zone 2		2	UNCNX	U1L2X	26.26	195.94	36.38	18.42	6.86						
		Additional 2-wire ISDN Loop in same DS1Interoffice Transport Combination - Zone 3		3	UNCNX	U1L2X	42.17	195.94	36.38	18.42	6.86						
		Additional 2-wire ISDN COCI (BRITE) in same 1/0 channel system combination- per month			UNCNX	UC1CA	1.66	27.33	2.90	16.86	1.04						

UNBUNDLED NETWORK ELEMENTS - Georgia														Attachment: 2		Exhibit: A	
CATEGORY		RATE ELEMENTS	Interim	Zone	BCS	USOC	RATES ($)					Svc Order Submitted Elec per LSR	Svc Order Submitted Manually per LSR	Incremental Charge - Manual Svc Order vs. Electronic-1st	Incremental Charge - Manual Svc Order vs. Electronic-Add'l	Incremental Charge - Manual Svc Order vs. Electronic-Disc 1st	Incremental Charge - Manual Svc Order vs. Electronic-Disc Add'l
							Rec	Nonrecurring		Nonrecurring Disconnect		OSS Rates ($)					
								First	Add'l	First	Add'l	SOMEC	SOMAN	SOMAN	SOMAN	SOMAN	SOMAN
		Each Additional DS1 Interoffice Channel per mile in same 3/1 Channel System per month			UNC1X	1L5XX	0.1154										
		Each Additional DS1 Interoffice Channel Facility Termination in same 3/1 Channel System per month			UNC1X	U1TF1	34.19	87.76	45.73	43.80	27.97						
		Each Additional DS1 COCI in the same 3/1 channel system combination per month			UNC1X	UC1D1	7.35	27.33	2.90	16.86	1.04						
		Nonrecurring Currently Combined Network Elements Switch -As-Is Charge			UNC1X	UNCCC		5.70	5.70	6.61	6.61						
	EXTENDED 4-WIRE DS1 LOOP WITH DEDICATED DS1 INTEROFFICE TRANSPORT w/ 3/1 MUX																
		First 4-wire DS1 Digital Lcoal Loop in Combination - Zone 1		1	UNC1X	USLXX	41.02	209.45	70.44	37.91	6.86						
		First 4-wire DS1 Digital Lcoal Loop in Combination - Zone 2		2	UNC1X	USLXX	46.41	209.45	70.44	37.91	6.86						
		First 4-wire DS1 Digital Lcoal Loop in Combination - Zone 3		3	UNC1X	USLXX	62.03	209.45	70.44	37.91	6.86						
		First Interoffice Transport - Dedicated - DS1 combination - Per Mile Per Month			UNC1X	1L5XX	0.1154										
		First Interoffice Transport - Dedicated - DS1 combination - Facility Termination Per Month			UNC1X	U1TF1	34.19	87.76	45.73	43.80	27.97						
		3/1 Channel System in combination per month			UNC3X	MQ3	121.90										
		Per each DS1 COCI combination per month			UNC1X	UC1D1	7.35	27.33	2.90	16.86	1.04						
		Each Additional DS1 Interoffice Channel per mile in same 3/1 Channel System per month			UNC1X	1L5XX	0.1154										
		Each Additional DS1 Interoffice Channel Facility Termination in same 3/1 Channel System per month			UNC1X	U1TF1	34.19	87.76	45.73	43.80	27.97						
		Each Additional DS1 COCI in the same 3/1 channel system combination per month			UNC1X	UC1D1	7.35	27.33	2.90	16.86	1.04						
		Additional 4-Wire DS1 Digital Local Loop in Combination - Zone 1		1	UNC1X	USLXX	41.02	209.45	70.44	37.91	6.86						
		Additional 4-Wire DS1 Digital Local Loop in Combination - Zone 2		2	UNC1X	USLXX	46.41	209.45	70.44	37.91	6.86						
		Additional 4-Wire DS1 Digital Local Loop in Combination - Zone 3		3	UNC1X	USLXX	62.03	209.45	70.44	37.91	6.86						
		Nonrecurring Currently Combined Network Elements Switch -As-Is Charge			UNC1X	UNCCC		5.70	5.70	6.61	6.61						
	EXTENDED 4-WIRE 56 KBPS DIGITAL EXTENDED LOOP WITH DS0 INTEROFFICE TRANSPORT																
		First 4-wire 56 kbps Local Loop in combination - Zone 1		1	UNCDX	UDL56	21.86	195.94	36.38	18.42	6.86						
		First 4-wire 56 kbps Local Loop in combination - Zone 2		2	UNCDX	UDL56	28.36	195.94	36.38	18.42	6.86						
		First 4-wire 56 kbps Local Loop in combination - Zone 3		3	UNCDX	UDL56	38.22	195.94	36.38	18.42	6.86						
		First 4-wiree 56 kbps Interoffice Transport - Dedicated - Per Mile per month			UNCDX	1L5XX	0.0057										
		First 4-wire 56 kbps Interoffice Transport - Dedicated - Facility Termination per month			UNCDX	U1TD5	7.83	66.53	33.61	43.42	27.60						
		Nonrecurring Currently Combined Network Elements Switch -As-Is Charge			UNCDX	UNCCC		5.70	5.70	6.61	6.61						
	EXTENDED 4-WIRE 64 KBPS DIGITAL EXTENDED LOOP WITH DS0 INTEROFFICE TRANSPORT																
		First 4-wire 64 kbps Local Loop in combination - Zone 1		1	UNCDX	UDL64	21.86	195.94	36.38	18.42	6.86						
		First 4-wire 64 kbps Local Loop in combination - Zone 2		2	UNCDX	UDL64	28.36	195.94	36.38	18.42	6.86						
		First 4-wire 64 kbps Local Loop in combination - Zone 3		3	UNCDX	UDL64	38.22	195.94	36.38	18.42	6.86						
		First I4-wire 65 kbps Interoffice Transport - Dedicated - Per Mile per month			UNCDX	1L5XX	0.0057										
		First 4-wire 64 kbps Interoffice Transport - Dedicated - Facility Termination per month			UNCDX	U1TD6	7.83	66.53	33.61	43.42	27.60						
		Nonrecurring Currently Combined Network Elements Switch -As-Is Charge			UNCDX	UNCCC		5.70	5.70	6.61	6.61						
ADDITIONAL NETWORK ELEMENTS																	
	When used as a part of a currently combined facility, the non-recurrng charges do not apply, but a Switch As Is charge does apply.																
	When used as ordinarily combined network elements in All States, the non-recurring charges apply and the Switch As Is Charge does not.																
	Nonrecurring Currently Combined Network Elements "Switch As Is" Charge (One applies to each combination)																
		Nonrecurring Currently Combined Network Elements Switch -As-Is Charge - 2 wire/4-Wire VG			UNCVX	UNCCC		5.70	5.70	6.61	6.61						

CATEGORY	RATE ELEMENTS	Interim	Zone	BCS	USOC	RATES ($)					Svc Order Submitted Elec per LSR	Svc Order Submitted Manually per LSR	Attachment: 2 Incremental Charge - Manual Svc Order vs. Electronic-1st	Attachment: 2 Incremental Charge - Manual Svc Order vs. Electronic-Add'l	Exhibit: A Incremental Charge - Manual Svc Order vs. Electronic-Disc 1st	Exhibit: A Incremental Charge - Manual Svc Order vs. Electronic-Disc Add'l
						Rec	Nonrecurring		Nonrecurring Disconnect		OSS Rates ($)					
							First	Add'l	First	Add'l	SOMEC	SOMAN	SOMAN	SOMAN	SOMAN	SOMAN
	Nonrecurring Currently Combined Network Elements Switch -As-Is Charge - 56/64 kbps			UNCDX	UNCCC		5.70	5.70	6.61	6.61						
	Nonrecurring Currently Combined Network Elements Switch -As-Is Charge - DS1			UNC1X	UNCCC		5.70	5.70	6.61	6.61						
	Nonrecurring Currently Combined Network Elements Switch -As-Is Charge - DS3			UNC3X	UNCCC		5.70	5.70	6.61	6.61						
	Nonrecurring Currently Combined Network Elements Switch -As-Is Charge - STS1			UNCSX	UNCCC		5.70	5.70	6.61	6.61						
	Optional Features & Functions:															
	Clear Channel Capability Extended Frame Option - per DS1	I		U1TD1, ULDD1,UNC1X	CCOEF		0I	0I	0I	0I						
	Clear Channel Capability Super FrameOption - per DS1	I		U1TD1, ULDD1,UNC1X	CCOSF		0I	0I	0I	0I						
	Clear Channel Capability (SF/ESF) Option - Subsequent Activity - per DS1	I		ULDD1, U1TD1, UNC1X, USL	NRCCC		184.62S	23.78S	2.03S	0.79S						
	C-bit Parity Option - Subsequent Activity - per DS3	i		U1TD3, ULDD3, UE3, UNC3X	NRCC3		218.74S	7.66S	0.7591S	0S						
	MULTIPLEXERS															
	DS1 to DS0 Channel System per month			UNC1X	MQ1	69.75	86.10									
	OCU-DP COCI (data) - DS1 to DS0 Channel System - per month (2.4-64kbs) used for a Local Loop			UDL	1D1DD	0.9963	11.98	11.39	6.61	6.61						
	OCU-DP COCI (data) - DS1 to DS0 Channel System - per month (2.4-64kbs) used for connection to a channelized DS1 Local Channel in the same SWC as collocation			U1TUD	1D1DD	0.9963	11.98	11.39	6.61	6.61						
	2-wire ISDN COCI (BRITE) - DS1 to DS0 Channel Systsem - per month for a Local Loop			UDN	UC1CA	1.66	15.81	11.39	6.61	6.61						
	2-wire ISDN COCI (BRITE) - DS1 to DS0 Channel Systsem - per month used for connection to a channelized DS1 Local Channel in the same SWC as collocation			U1TUB	UC1CA	1.66	15.81	11.39	6.61	6.61						
	Voice Grade COCI - DS1 to DS0 Channel System - per month used for a Local Loop			UEA	1D1VG	0.4689	11.98	11.39	6.61	6.61						
	Voice Grade COCI - DS1 to DS0 Channel System - per month used for connection to a channelized DS1 Local Channel in the same SWC as collocation			U1TUC	1D1VG	0.4689	11.98	11.39	6.61	6.61						
	DS3 to DS1 Channel System per month			UNC3X	MQ3	121.90										
	STS-1 to DS1 Channel System per month			UNCSX	MQ3	121.90										
	DS1 COCI used with Loop per month			USL	UC1D1	7.35	15.81	11.39	6.61	6.61						
	DS1 COCI (used for connection to a channelized DS1 Local Channel in the same SWC as collocation) per month			U1TUA	UC1D1	7.35	15.81	11.39	6.61	6.61						
	DS1 COCI used with Interoffice Channel per month			U1TD1	UC1D1	7.35	15.81	11.39	6.61	6.61						
	DS3 Interface Unit (DS1 COCI) used with Local Channel per month			ULDD1	UC1D1	7.35	15.81	11.39	6.61	6.61						
UNBUNDLED LOCAL EXCHANGE SWITCHING(PORTS)																
	Exchange Ports															
	NOTE: Although the Port Rate includes all available features in GA, KY, LA & TN, the desired features will need to be ordered using retail USOCs															
	2-WIRE VOICE GRADE LINE PORT RATES (RES)															
	Exchange Ports - 2-Wire Analog Line Port- Res.			UEPSR	UEPRL	1.09	2.42	2.31	1.37	1.28						
	Exchange Ports - 2-Wire Analog Line Port with Caller ID - Res.			UEPSR	UEPRC	1.09	2.42	2.31	1.37	1.28						
	Exchange Ports - 2-Wire Analog Line Port outgoing only - Res.			UEPSR	UEPRO	1.09	2.42	2.31	1.37	1.28						
	Exchange Ports - 2-Wire VG unbundled res, low usage line port with Caller ID (LUM)			UEPSR	UEPAP	1.09	2.42	2.31	1.37	1.28						
	Exchange Ports - 2-Wire Voice Georgia basic dialing port without Caller ID			UEPSR	UEPWC	1.09	2.42	2.31	1.37	1.28						
	2-Wire voice unbundled Georgia basic dialing port for use with Caller ID - res			UEPSR	UEPWQ	1.09	2.42	2.31	1.37	1.28						
	2-Wire voice unbundled Georgia basic dialing port - outgoing only			UEPSR	UEPWR	1.09	2.42	2.31	1.37	1.28						

UNBUNDLED NETWORK ELEMENTS - Georgia														Attachment: 2		Exhibit: A	
CATEGORY	RATE ELEMENTS	Interim	Zone	BCS	USOC	RATES ($)					Svc Order Submitted Elec per LSR	Svc Order Submitted Manually per LSR	Incremental Charge - Manual Svc Order vs. Electronic-1st	Incremental Charge - Manual Svc Order vs. Electronic-Add'l	Incremental Charge - Manual Svc Order vs. Electronic-Disc 1st	Incremental Charge - Manual Svc Order vs. Electronic-Disc Add'l
						Rec	Nonrecurring		Nonrecurring Disconnect		OSS Rates ($)					
							First	Add'l	First	Add'l	SOMEC	SOMAN	SOMAN	SOMAN	SOMAN	SOMAN
	2-Wire voice unbundled Low Usage Line Port without Caller ID Capability			UEPSR	UEPRT	1.09	2.42	2.31	1.37	1.28						
	2-Wire Voice Grade Unbundled Port without Caller ID capability, Georgia			UEPSR	UEPRV	1.09	2.42	2.31	1.37	1.28						
	2-Wire Voice Grade Unbundled Port with Caller ID capability, Georgia			UEPSR	UEPRU	1.09	2.42	2.31	1.37	1.28						
	Subsequent Activity			UEPSR	USASC	0.00	0.00	0.00								
FEATURES																
	All Available Vertical Features			UEPSR	UEPVF	0.775	0.00	0.00								
2-WIRE VOICE GRADE LINE PORT RATES (BUS)																
	Exchange Ports - 2-Wire Analog Line Port without Caller ID - Bus			UEPSB	UEPBL	1.09	2.42	2.31	1.37	1.28						
	Exchange Ports - 2-Wire VG unbundled Line Port with unbundled port with Caller+E484 ID - Bus.			UEPSB	UEPBC	1.09	2.42	2.31	1.37	1.28						
	Exchange Ports - 2-Wire Voice Georgia Business Basic Dialing Port, with Caller ID capability			UEPSB	UEPWP	1.09	2.42	2.31	1.37	1.28						
	Exchange Ports - 2-Wire Analog Line Port outgoing only - Bus.			UEPSB	UEPBO	1.09	2.42	2.31	1.37	1.28						
	Exhange Ports - 2-Wire VG unbundled incoming only port with Caller ID - Bus			UEPSB	UEPB1	1.09	2.42	2.31	1.37	1.28						
	Exchange Ports - 2-Wire Voice Georgia Business Dialing Plan without Caller ID			UEPSB	UEPWD	1.09	2.42	2.31	1.37	1.28						
	2-Wire voice unbundled Incoming Only Port without Caller ID Capability			UEPSB	UEPBE	1.09	2.42	2.31	1.37	1.28						
	Subsequent Activity			UEPSB	USASC	0.00	0.00	0.00								
FEATURES																
	All Available Vertical Features			UEPSB	UEPVF	0.775	0.00	0.00								
EXCHANGE PORT RATES (DID & PBX)																
	2-Wire VG Unbundled 2-Way PBX Trunk - Res			UEPSE	UEPRD	1.09	28.88	13.63	11.48	0.83						
	2-Wire VG Line Side Unbundled 2-Way PBX Trunk - Bus			UEPSP	UEPPC	1.09	28.88	13.63	11.48	0.83						
	2-Wire VG Line Side Unbundled Outward PBX Trunk - Bus			UEPSP	UEPPO	1.09	28.88	13.63	11.48	0.83						
	2-Wire VG Line Side Unbundled Incoming PBX Trunk - Bus			UEPSP	UEPP1	1.09	28.88	13.63	11.48	0.83						
	2-Wire Analog Long Distance Terminal PBX Trunk - Bus			UEPSP	UEPLD	1.09	28.88	13.63	11.48	0.83						
	2-Wire Voice Unbundled PBX LD Terminal Ports			UEPSP	UEPLD	1.09	28.88	13.63	11.48	0.83						
	2-Wire Vice Unbundled 2-Way PBX Usage Port			UEPSP	UEPXA	1.09	28.88	13.63	11.48	0.83						
	2-Wire Voice Unbundled PBX Toll Terminal Hotel Ports			UEPSP	UEPXB	1.09	28.88	13.63	11.48	0.83						
	2-Wire Voice Unbundled PBX LD DDD Terminals Port			UEPSP	UEPXC	1.09	28.88	13.63	11.48	0.83						
	2-Wire Voice Unbundled PBX LD Terminal Switchboard Port			UEPSP	UEPXD	1.09	28.88	13.63	11.48	0.83						
	2-Wire Voice Unbundled PBX LD Terminal Switchboard IDD Capable Port			UEPSP	UEPXE	1.09	28.88	13.63	11.48	0.83						
	2-Wire Voice Unbundled 2-Way PBX Hotel/Hospital Economy Administrative Calling Port			UEPSP	UEPXL	1.09	28.88	13.63	11.48	0.83						
	2-Wire Voice Unbundled 2-Way PBX Hotel/Hospital Economy Room Calling Port			UEPSP	UEPXM	1.09	28.88	13.63	11.48	0.83						
	2-Wire Voice Unbundled 1-Way Outgoing PBX Hotel/Hospital Discount Room Calling Port			UEPSP	UEPXO	1.09	28.88	13.63	11.48	0.83						
	2-Wire Voice Unbundled 1-Way Outgoing PBX Measured Port			UEPSP	UEPXS	1.09	28.88	13.63	11.48	0.83						
	2-Wire voice unbundled Georgia basic dialing port - 1-Way Oudial Trunk			UEPSP	UEPWS	1.09	28.88	13.63	11.48	0.83						
	2-Wire voice unbundled Georgia basic dialing port - 2-Way Trunk			UEPSP	UEPWT	1.09	28.88	13.63	11.48	0.83						
	2-Wire voice unbundled Georgia basic dialing port - 2-way PBX Trunk			UEPSP	UEPPQ	1.09	28.88	13.63	11.48	0.83						
	Subsequent Activity			UEPSP	USASC	0.00	0.00	0.00								
FEATURES																
	All Available Vertical Features			UEPSP UEPSE	UEPVF	0.775	0.00	0.00								
EXCHANGE PORT RATES (COIN)																
	Exchange Ports - Coin Port					1.09	2.42	2.31	1.37	1.28						
NOTE: Transmission/usage charges associated with POTS circuit switched usage will also apply to circuit switched voice and/or circuit switched data transmission by B-Channels associated with 2-wire ISDN ports.																

UNBUNDLED NETWORK ELEMENTS - Georgia													Attachment: 2		Exhibit: A	
CATEGORY	RATE ELEMENTS	Interim	Zone	BCS	USOC	RATES ($)					Svc Order Submitted Elec per LSR	Svc Order Submitted Manually per LSR	Incremental Charge - Manual Svc Order vs. Electronic-1st	Incremental Charge - Manual Svc Order vs. Electronic-Add'l	Incremental Charge - Manual Svc Order vs. Electronic-Disc 1st	Incremental Charge - Manual Svc Order vs. Electronic-Disc Add'l
						Rec	Nonrecurring		Nonrecurring Disconnect		OSS Rates ($)					
							First	Add'l	First	Add'l	SOMEC	SOMAN	SOMAN	SOMAN	SOMAN	SOMAN
	NOTE: Access to B Channel or D Channel Packet capabilities will be available only through BFR/New Business Request Process. Rates for the packet capabilities will be determined via the Bona Fide Request/New Business Request Process.															
UNBUNDLED LOCAL EXCHANGE SWITCHING(PORTS)																
	EXCHANGE PORT RATES															
	The DS1 Port rates below for 4-Wire DDITS Trunk Port and 4-Wire ISDN Port in this rate exhibit apply to the embedded base in place as of 10/2/03 until 4/1/04. After 4/1/04 these rates shall revert to tariff rates or a separate agreement.															
	Requests for 4-Wire DDITS Trunk Ports with 4-Wire ISDN DS1 Ports after the effective date of this amendment shall be provided pursuant to a separate agreement or tariff at BellSouth's discretion.															
	Exchange Ports - 2-Wire DID Port			UEPEX	UEPP2	5.50	122.26	18.65	54.82	3.45						
	Exchange Ports - DDITS Port - 4-Wire DS1 Port with DID capability (E:4/1/2004)			UEPDD	UEPDD	41.20	200.96	93.00	65.81	2.33						
	Exchange Ports - 2-Wire ISDN Port (See Notes below.)			UEPTX, UEPSX	U1PMA	6.09	76.39	51.50	45.67	10.36						
	All Features Offered			UEPTX, UEPSX	UEPVF	0.775	0.00	0.00								
	Exchange Ports - 2-Wire ISDN Port -- Channel Profiles			UEPTX, UEPSX	U1UMA	0.00	0.00	0.00								
	NOTE: Transmission/usage charges associated with POTS circuit switched usage will also apply to circuit switched voice and/or circuit switched data transmission by B-Channels associated with 2-wire ISDN ports.															
	NOTE: Access to B Channel or D Channel Packet capabilities will be available only through BFR/New Business Request Process. Rates for the packet capabilities will be determined via the Bona Fide Request/New Business Request Process.															
	EXCHANGE PORT RATES (continued)															
	Exchange Ports - 4-Wire ISDN DS1 Port with Detailed E911 Locator Capability (E:4/1/2004)			UEPEX	UEPEX	65.13	198.74	97.29	72.95	17.69						
	Exchange Ports - 4-Wire ISDN DS1 Port (E:4/1/2004)			UEPDX	UEPDX	65.13	198.74	97.29	72.95	17.69						
	Physical Collocation - DS1 Cross-Connects			UEPEX UEPDX	PE1P1	0.3726										
	Virtual collocation - Special Access & UNE, cross-connect per DS1			UEPEX UEPDX	CNC1X	0.3726										
	Detailed E911 with Locator Capability (required with UEPEX port)															
	Unbundled Exchange Ports, 4-Wire ISDN DS1 Port - E911 Locator Capability - Initial Profile Establishment per CLEC per State			UEPEX	UEP1A	0.00	1,818.00									
	Unbundled Exchange Ports, 4-Wire ISDN DS1 Port - E911 Locator Capability - Subsequent Profile Changes, Additions, Deletions			UEPEX	UEP1B	0.00	176.57									
	New or Additional PRI Telephone Numbers															
	Unbundled Exchange Ports, 4-Wire ISDN DS1 Port - E911 Locator Capability 2-way Telephone Numbers, per number in E911 profile [New or Additional]			UEPEX	UEP1C	0.0703	0.50									
	Unbundled Exchange Ports, 4-Wire ISDN DS1 Port - E911 Locator Capability - Outdial Telephone Numbers, per number in E911 profile [New or Additional]			UEPEX	UEP1D	0.0703	10.72	10.72								
	Unbundled Exchange Ports, 4-Wire ISDN DS1 Port - Inward Telephone Numbers - Inward Data Only Option [New or Additional]			UEPDX	UEP1E	0.00	0.50									
	Exchange Ports - 4-Wire ISDN DS1 Port - Subsequent [New] Inward Tel Numbers [Customer Testing Purposes]			UEPEX	PR7ZT	0.00	21.43	21.43								
	LOCAL NUMBER PORTABILITY															
	Local Number Portability (1 per port)			UEPEX UEPDX	LNPCN	1.75										
	INTERFACE (Provsioning Only)															
	Voice/Data			UEPEX	PR71V	0.00	0.00	0.00								
	Digital Data			UEPEX	PR71D	0.00	0.00	0.00								
	Inward Data			UEPDX	PR71E	0.00	0.00	0.00								
	New or Additional Channel															
	New or Additional - Voice/Data "B" Channel			UEPEX	PR7BV	0.00	28.71									
	New or Additional - Digital Data "B" Channel			UEPEX	PR7BF	0.00	28.71									
	New or Additional Inward Data "B" Channel			UEPDX	PR7BD	0.00	28.71									
	New or Additional Useage Sensitive Voice Data "B" Channel			UEPEX	PR7BS	0.00										
	New or Additional Useage Sensitive Digital Data "B" Channel			UEPEX	PR7BU	0.00										
	New or Additional PRI "D" Channel			UEPEX	PR7EX	0.00	28.71									
	CALL TYPES															
	Inward			UEPEX UEPDX	PR7C1	0.00	0.00	0.00								
	Outward			UEPEX	PR7CO	0.00	0.00	0.00								
	Two-way			UEPEX	PR7CC	0.00	0.00	0.00								
	UNBUNDLED PORT with REMOTE CALL FORWARDING CAPABILITY															
	UNBUNDLED REMOTE CALL FORWARDING SERVICE - RESIDENCE															
	Unbundled Remote Call Forwarding Service, Area Calling, Res			UEPVR	UERAC	1.09	2.42	2.31	1.37	1.28						

UNBUNDLED NETWORK ELEMENTS - Georgia														Attachment: 2		Exhibit: A	
CATEGORY		RATE ELEMENTS	Interim	Zone	BCS	USOC	RATES ($)					Svc Order Submitted Elec per LSR	Svc Order Submitted Manually per LSR	Incremental Charge - Manual Svc Order vs. Electronic-1st	Incremental Charge - Manual Svc Order vs. Electronic-Add'l	Incremental Charge - Manual Svc Order vs. Electronic-Disc 1st	Incremental Charge - Manual Svc Order vs. Electronic-Disc Add'l
							Rec	Nonrecurring		Nonrecurring Disconnect		OSS Rates ($)					
								First	Add'l	First	Add'l	SOMEC	SOMAN	SOMAN	SOMAN	SOMAN	SOMAN
		Unbundled Remote Call Forwarding Service, Local Calling - Res			UEPVR	UERLC	1.09	2.42	2.31	1.37	1.28						
		Unbundled Remote Call Forwarding Service, InterLATA - Res			UEPVR	UERTE	1.09	2.42	2.31	1.37	1.28						
		Unbundled Remote Call Forwarding Service, IntraLATA - Res			UEPVR	UERTR	1.09	2.42	2.31	1.37	1.28						
	Non-Recurring																
		Unbundled Remote Call Forwarding Service - Conversion - Switch-as-is			UEPVR	USAC2		2.01	0.31								
		Unbundled Remote Call Forwarding Service - Conversion with allowed change (PIC and LPIC)			UEPVR	USACC		2.01	0.31								
	UNBUNDLED REMOTE CALL FORWARDING - Bus																
		Unbundled Remote Call Forwarding Service, Area Calling - Bus			UEPVB	UERAC	1.09	2.42	2.31	1.37	1.28						
		Unbundled Remote Call Forwarding Service, Local Calling - Bus			UEPVB	UERLC	1.09	2.42	2.31	1.37	1.28						
		Unbundled Remote Call Forwarding Service, InterLATA - Bus			UEPVB	UERTE	1.09	2.42	2.31	1.37	1.28						
		Unbundled Remote Call Forwarding Service, IntraLATA - Bus			UEPVB	UERTR	1.09	2.42	2.31	1.37	1.28						
		Unbundled Remote Call Forwarding Service Expanded and Exception Local Calling			UEPVB	UERVJ	1.09	2.42	2.31	1.37	1.28						
	Non-Recurring																
		Unbundled Remote Call Forwarding Service - Conversion - Switch-as-is			UEPVB	USAC2		2.01	0.31								
		Unbundled Remote Call Forwarding Service - Conversion with allowed change (PIC and LPIC)			UEPVB	USACC		2.01	0.31								
UNBUNDLED LOCAL SWITCHING, PORT USAGE																	
	End Office Switching (Port Usage)																
		End Office Switching Function, Per MOU					0.0006153										
		End Office Trunk Port - Shared, Per MOU					0.0001226										
	Tandem Switching (Port Usage) (Local or Access Tandem)																
		Tandem Switching Function Per MOU					0.0000972										
		Tandem Trunk Port - Shared, Per MOU					0.0001557										
		Tandem Switching Function Per MOU (Melded)					0.000017904										
		Tandem Trunk Port - Shared, Per MOU (Melded)					0.00002868										
		Melded Factor: 18.42% of the Tandem Rate															
	Common Transport																
		Common Transport - Per Mile, Per MOU					0.0000027										
		Common Transport - Facilities Termination Per MOU					0.0001914										
UNBUNDLED PORT/LOOP COMBINATIONS - COST BASED RATES																	
	Cost Based Rates are applied where BellSouth is required by FCC and/or State Commission rule to provide Unbundled Local Switching or Switch Ports.																
	Features shall apply to the Unbundled Port/Loop Combination - Cost Based Rate section in the same manner as they are applied to the Stand-Alone Unbundled Port section of this Rate Exhibit.																
	End Office and Tandem Switching Usage and Common Transport Usage rates in the Port section of this rate exhibit shall apply to all combinations of loop/port network elements except for UNE Coin Port/Loop Combinations.																
	The first and additional Port nonrecurring charges apply to Not Currently Combined Combos. For Currently Combined Combos the nonrecurring charges shall be those identified in the Nonrecurring - Currently Combined sections.																
	2-WIRE VOICE GRADE LOOP WITH 2-WIRE LINE PORT (RES)																
	UNE Port/Loop Combination Rates																
		2-Wire VG Loop/Port Combo - Zone 1		1			10.46										
		2-Wire VG Loop/Port Combo - Zone 2		2			15.76										
		2-Wire VG Loop/Port Combo - Zone 3		3			32.56										
	UNE Loop Rates																
		2-Wire Voice Grade Loop (SL1) - Zone 1		1	UEPRX	UEPLX	9.56										
		2-Wire Voice Grade Loop (SL1) - Zone 2		2	UEPRX	UEPLX	14.86										
		2-Wire Voice Grade Loop (SL1) - Zone 3		3	UEPRX	UEPLX	31.66										
	2-Wire Voice Grade Line Port Rates (Res)																
		2-Wire voice unbundled port - residence			UEPRX	UEPRL	0.9019	10.05	7.36	1.37	1.28						
		2-Wire voice unbundled port with Caller ID - res			UEPRX	UEPRC	0.9019	10.05	7.36	1.37	1.28						
		2-Wire voice unbundled port outgoing only - res			UEPRX	UEPRO	0.9019	10.05	7.36	1.37	1.28						
		2-Wire voice unbundles res, low usage line port with Caller ID (LUM)			UEPRX	UEPAP	0.9019	10.05	7.36	1.37	1.28						
		2-Wire voice unbundled Georgia basic dialing port without Caller ID capability - res			UEPRX	UEPWC	0.9019	10.05	7.36	1.37	1.28						

CATEGORY	RATE ELEMENTS	Interim	Zone	BCS	USOC	RATES ($)					Svc Order Submitted Elec per LSR	Svc Order Submitted Manually per LSR	Attachment: 2 Incremental Charge - Manual Svc Order vs. Electronic-1st	Attachment: 2 Incremental Charge - Manual Svc Order vs. Electronic-Add'l	Exhibit: A Incremental Charge - Manual Svc Order vs. Electronic-Disc 1st	Exhibit: A Incremental Charge - Manual Svc Order vs. Electronic-Disc Add'l
						Rec	Nonrecurring		Nonrecurring Disconnect		OSS Rates ($)					
							First	Add'l	First	Add'l	SOMEC	SOMAN	SOMAN	SOMAN	SOMAN	SOMAN
	2-Wire voice unbundled Georgia basic dialing port for use with Caller ID - res			UEPRX	UEPWQ	0.9019	10.05	7.36	1.37	1.28						
	2-Wire voice unbundled Georgia basic dialing port - outgoing only			UEPRX	UEPWR	0.9019	10.05	7.36	1.37	1.28						
	2-Wire voice unbundled Low Usage Line Port without Caller ID Capability			UEPRX	UEPRT	0.9019	10.05	7.36	1.37	1.28						
	2-Wire Voice Grade Unbundled Port without Caller ID, Georgia			UEPRX	UEPRV	0.9019	10.05	7.36	1.37	1.28						
	2-Wire Voice Grade Unbundled Port with Caller ID, Georgia			UEPRX	UEPRU	0.9019	10.05	7.36	1.37	1.28						
FEATURES																
	All Features Offered			UEPRX	UEPVF	0.775	0.00	0.00								
LOCAL NUMBER PORTABILITY																
	Local Number Portability (1 per port)			UEPRX	LNPCX	0.35										
NONRECURRING CHARGES (NRCs) - CURRENTLY COMBINED																
	2-Wire Voice Grade Loop / Line Port Combination - Conversion - Switch-as-is			UEPRX	USAC2		0.10	0.10								
	2-Wire Voice Grade Loop / Line Port Combination - Conversion - Switch with change			UEPRX	USACC		0.10	0.10								
ADDITIONAL NRCs																
	2-Wire Voice Grade Loop/Line Port Combination - Subsequent Activity			UEPRX	USAS2	0.00	0.00	0.00								
	Unbundled Miscellaneous Rate Element, Tag Loop at End User Premise			UEPRX	URETL		8.33	0.83								
OFF/ON PREMISES EXTENSION CHANNELS																
	2 Wire Analog Voice Grade Extension Loop – Non-Design		1	UEPRX	UEAEN	10.51	40.02	9.99	5.61	1.72						
	2 Wire Analog Voice Grade Extension Loop – Non-Design		2	UEPRX	UEAEN	15.85	40.02	9.99	5.61	1.72						
	2 Wire Analog Voice Grade Extension Loop – Non-Design		3	UEPRX	UEAEN	31.97	40.02	9.99	5.61	1.72						
	2 Wire Analog Voice Grade Extension Loop – Design		1	UEPRX	UEAED	11.57	79.85	24.65	18.92	7.87						
	2 Wire Analog Voice Grade Extension Loop – Design		2	UEPRX	UEAED	16.95	79.85	24.65	18.92	7.87						
	2 Wire Analog Voice Grade Extension Loop – Design		3	UEPRX	UEAED	33.08	79.85	24.65	18.92	7.87						
INTEROFFICE TRANSPORT																
	Interoffice Transport - Dedicated - 2 Wire Voice Grade - Facility Termination			UEPRX	U1TV2	12.87	48.46	19.48	16.58	5.00						
	Interoffice Transport - Dedicated - 2 Wire Voice Grade - Per Mile or Fraction Mile			UEPRX	U1TVM	0.0057	0.00	0.00								
2-WIRE VOICE GRADE LOOP WITH 2-WIRE LINE PORT (BUS)																
UNE Port/Loop Combination Rates																
	2-Wire VG Loop/Port Combo - Zone 1		1			10.46										
	2-Wire VG Loop/Port Combo - Zone 2		2			15.76										
	2-Wire VG Loop/Port Combo - Zone 3		3			32.56										
UNE Loop Rates																
	2-Wire Voice Grade Loop (SL1) - Zone 1		1	UEPBX	UEPLX	9.56										
	2-Wire Voice Grade Loop (SL1) - Zone 2		2	UEPBX	UEPLX	14.86										
	2-Wire Voice Grade Loop (SL1) - Zone 3		3	UEPBX	UEPLX	31.66										
2-Wire Voice Grade Line Port (Bus)																
	2-Wire voice unbundled port without Caller ID - bus			UEPBX	UEPBL	0.9019	10.05	7.36	1.37	1.28						
	2-Wire voice unbundled port with Caller + E484 ID - bus			UEPBX	UEPBC	0.9019	10.05	7.36	1.37	1.28						
	2-Wire voice unbundled port outgoing only - bus			UEPBX	UEPBO	0.9019	10.05	7.36	1.37	1.28						
	2-Wire voice unbundled incoming only port with Caller ID - Bus			UEPBX	UEPB1	0.9019	10.05	7.36	1.37	1.28						
	2-Wire voice unbundled Georgia basic dialing port, without Caller ID capability - bus			UEPBX	UEPWD	0.9019	10.05	7.36	1.37	1.28						
	2-Wire voice unbundled Georgia basic dialing port for use with Caller ID - bus			UEPBX	UEPWP	0.9019	10.05	7.36	1.37	1.28						
	2-Wire voice unbundled Incoming Only Port without Caller ID Capability			UEPBX	UEPBE	0.9019	10.05	7.36	1.37	1.28						
LOCAL NUMBER PORTABILITY																
	Local Number Portability (1 per port)			UEPBX	LNPCX	0.35										
FEATURES																
	All Features Offered			UEPBX	UEPVF	0.775	0.00	0.00								
NONRECURRING CHARGES (NRCs) - CURRENTLY COMBINED																

UNBUNDLED NETWORK ELEMENTS - Georgia													Attachment: 2		Exhibit: A	
CATEGORY	RATE ELEMENTS	Interim	Zone	BCS	USOC	RATES ($)					Svc Order Submitted Elec per LSR	Svc Order Submitted Manually per LSR	Incremental Charge - Manual Svc Order vs. Electronic-1st	Incremental Charge - Manual Svc Order vs. Electronic-Add'l	Incremental Charge - Manual Svc Order vs. Electronic-Disc 1st	Incremental Charge - Manual Svc Order vs. Electronic-Disc Add'l
						Rec	Nonrecurring		Nonrecurring Disconnect		OSS Rates ($)					
							First	Add'l	First	Add'l	SOMEC	SOMAN	SOMAN	SOMAN	SOMAN	SOMAN
	2-Wire Voice Grade Loop / Line Port Combination - Conversion - Switch-as-is			UEPBX	USAC2		0.10	0.10								
	2-Wire Voice Grade Loop / Line Port Combination - Conversion - Switch with change			UEPBX	USACC		0.10	0.10								
ADDITIONAL NRCs																
	2-Wire Voice Grade Loop/Line Port Combination - Subsequent Activity			UEPBX	USAS2		0.00	0.00								
	Unbundled Miscellaneous Rate Element, Tag Loop at End User Premise			UEPBX	URETL		8.33	0.83								
OFF/ON PREMISES EXTENSION CHANNELS																
	2 Wire Analog Voice Grade Extension Loop – Non-Design		1	UEPBX	UEAEN	10.51	40.02	9.99	5.61	1.72						
	2 Wire Analog Voice Grade Extension Loop – Non-Design		2	UEPBX	UEAEN	15.85	40.02	9.99	5.61	1.72						
	2 Wire Analog Voice Grade Extension Loop – Non-Design		3	UEPBX	UEAEN	31.97	40.02	9.99	5.61	1.72						
	2 Wire Analog Voice Grade Extension Loop – Design		1	UEPBX	UEAED	11.57	79.85	24.65	18.92	7.87						
	2 Wire Analog Voice Grade Extension Loop – Design		2	UEPBX	UEAED	16.95	79.85	24.65	18.92	7.87						
	2 Wire Analog Voice Grade Extension Loop – Design		3	UEPBX	UEAED	33.08	79.85	24.65	18.92	7.87						
INTEROFFICE TRANSPORT																
	Interoffice Transport - Dedicated - 2 Wire Voice Grade - Facility Termination			UEPBX	U1TV2	12.87	48.46	19.48	16.58	5.00						
	Interoffice Transport - Dedicated - 2 Wire Voice Grade - Per Mile or Fraction Mile			UEPBX	U1TVM	0.0057	0.00	0.00								
2-WIRE VOICE GRADE LOOP WITH 2-WIRE LINE PORT (RES - PBX)																
UNE Port/Loop Combination Rates																
	2-Wire VG Loop/Port Combo - Zone 1		1			10.46										
	2-Wire VG Loop/Port Combo - Zone 2		2			15.76										
	2-Wire VG Loop/Port Combo - Zone 3		3			32.56										
UNE Loop Rates																
	2-Wire Voice Grade Loop (SL 1) - Zone 1		1	UEPRG	UEPLX	9.56										
	2-Wire Voice Grade Loop (SL 1) - Zone 2		2	UEPRG	UEPLX	14.86										
	2-Wire Voice Grade Loop (SL 1) - Zone 3		3	UEPRG	UEPLX	31.66										
2-Wire Voice Grade Line Port Rates (RES - PBX)																
	2-Wire VG Unbundled Combination 2-Way PBX Trunk Port - Res			UEPRG	UEPRD	0.9019	10.05	7.36	1.37	1.28						
LOCAL NUMBER PORTABILITY																
	Local Number Portability (1 per port)			UEPRG	LNPCP	3.15	0.00	0.00								
FEATURES																
	All Features Offered			UEPRG	UEPVF	0.775	0.00	0.00								
NONRECURRING CHARGES (NRCs) - CURRENTLY COMBINED																
	2-Wire Voice Grade Loop/ Line Port Combination (PBX) - Conversion - Switch-As-Is			UEPRG	USAC2		0.10	0.10								
	2-Wire Voice Grade Loop/ Line Port Combination (PBX) - Conversion - Switch with Change			UEPRG	USACC		0.10	0.10								
ADDITIONAL NRCs																
	2-Wire Voice Grade Loop/ Line Port Combination (PBX) - Subsequent Activity			UEPRG	USAS2	0.00	0.00	0.00								
	PBX Subsequent Activity - Change/Rearrange Multiline Hunt Group						6.70	6.70								
	Unbundled Miscellaneous Rate Element, Tag Loop at End User Premise			UEPRG	URETL		8.33	0.83								
OFF/ON PREMISES EXTENSION CHANNELS																
	Local Channel Voice grade, per termination		1	UEPRG	P2JHX	11.57	79.85	24.65	18.92	7.87						
	Local Channel Voice grade, per termination		2	UEPRG	P2JHX	16.95	79.85	24.65	18.92	7.87						
	Local Channel Voice grade, per termination		3	UEPRG	P2JHX	33.08	79.85	24.65	18.92	7.87						
	Non-Wire Direct Serve Channel Voice Grade		1	UEPRG	SDD2X	12.74	56.92	7.70	4.40	0.02						
	Non-Wire Direct Serve Channel Voice Grade		2	UEPRG	SDD2X	19.76	56.92	7.70	4.40	0.02						
	Non-Wire Direct Serve Channel Voice Grade		3	UEPRG	SDD2X	37.18	56.92	7.70	4.40	0.02						
INTEROFFICE TRANSPORT																
	Interoffice Transport - Dedicated - 2 Wire Voice Grade - Facility Termination			UEPRG	U1TV2	12.87	48.46	19.48	16.58	5.00						

UNBUNDLED NETWORK ELEMENTS - Georgia														Attachment: 2		Exhibit: A	
CATEGORY	RATE ELEMENTS	Interim	Zone	BCS	USOC	RATES ($)					Svc Order Submitted Elec per LSR	Svc Order Submitted Manually per LSR	Incremental Charge - Manual Svc Order vs. Electronic-1st	Incremental Charge - Manual Svc Order vs. Electronic-Add'l	Incremental Charge - Manual Svc Order vs. Electronic-Disc 1st	Incremental Charge - Manual Svc Order vs. Electronic-Disc Add'l
						Rec	Nonrecurring		Nonrecurring Disconnect		OSS Rates ($)					
							First	Add'l	First	Add'l	SOMEC	SOMAN	SOMAN	SOMAN	SOMAN	SOMAN
	Interoffice Transport - Dedicated - 2 Wire Voice Grade - Per Mile or Fraction Mile			UEPRG	U1TVM	0.0057	0.00	0.00								
2-WIRE VOICE GRADE LOOP WITH 2-WIRE LINE PORT (BUS - PBX)																
UNE Port/Loop Combination Rates																
	2-Wire VG Loop/Port Combo - Zone 1		1			10.46										
	2-Wire VG Loop/Port Combo - Zone 2		2			15.76										
	2-Wire VG Loop/Port Combo - Zone 3		3			32.56										
UNE Loop Rates																
	2-Wire Voice Grade Loop (SL 1) - Zone 1		1	UEPPX	UEPLX	9.56										
	2-Wire Voice Grade Loop (SL 1) - Zone 2		2	UEPPX	UEPLX	14.86										
	2-Wire Voice Grade Loop (SL 1) - Zone 3		3	UEPPX	UEPLX	31.66										
2-Wire Voice Grade Line Port Rates (BUS - PBX)																
	Line Side Unbundled Combination 2-Way PBX Trunk Port - Bus			UEPPX	UEPPC	0.9019	10.05	7.36	1.37	1.28						
	Line Side Unbundled Outward PBX Trunk Port - Bus			UEPPX	UEPPO	0.9019	10.05	7.36	1.37	1.28						
	Line Side Unbundled Incoming PBX Trunk Port - Bus			UEPPX	UEPP1	0.9019	10.05	7.36	1.37	1.28						
	2-Wire Voice Unbundled PBX LD Terminal Ports			UEPPX	UEPLD	0.9019	10.05	7.36	1.37	1.28						
	2-Wire Voice Unbundled 2-Way Combination PBX Usage Port			UEPPX	UEPXA	0.9019	10.05	7.36	1.37	1.28						
	2-Wire Voice Unbundled PBX Toll Terminal Hotel Ports			UEPPX	UEPXB	0.9019	10.05	7.36	1.37	1.28						
	2-Wire Voice Unbundled PBX LD DDD Terminals Port			UEPPX	UEPXC	0.9019	10.05	7.36	1.37	1.28						
	2-Wire Voice Unbundled PBX LD Terminal Switchboard Port			UEPPX	UEPXD	0.9019	10.05	7.36	1.37	1.28						
	2-Wire Voice Unbundled PBX LD Terminal Switchboard IDD Capable Port			UEPPX	UEPXE	0.9019	10.05	7.36	1.37	1.28						
	2-Wire Voice Unbundled 2-Way PBX Hotel/Hospital Economy Administrative Calling Port			UEPPX	UEPXL	0.9019	10.05	7.36	1.37	1.28						
	2-Wire Voice Unbundled 2-Way PBX Hotel/Hospital Economy Room Calling Port			UEPPX	UEPXM	0.9019	10.05	7.36	1.37	1.28						
	2-Wire Voice Unbundled 1-Way Outgoing PBX Hotel/Hospital Discount Room Calling Port			UEPPX	UEPXO	0.9019	10.05	7.36	1.37	1.28						
	2-Wire Voice Unbundled 1-Way Outgoing PBX Measured Port			UEPPX	UEPXS	0.9019	10.05	7.36	1.37	1.28						
	2-Wire voice unbundled Georgia basic dialing port - 1-Way Oudial Trunk			UEPPX	UEPWS	0.9019	10.05	7.36	1.37	1.28						
	2-Wire voice unbundled Georgia basic dialing port - 2-Way Trunk			UEPPX	UEPWT	0.9019	10.05	7.36	1.37	1.28						
	2-Wire voice unbundled Georgia basic dialing port - 2-way PBX Trunk			UEPPX	UEPPQ	0.9019	10.05	7.36	1.37	1.28						
	2-Wire voice unbundled Georgia basic dialing port - PBX LD Terminal Ports			UEPPX	UEPPS	0.9019	10.05	7.36	1.37	1.28						
	2-Wire voice unbundled Georgia basic dialing port - PBX Toll Terminal Ports			UEPPX	UEPPT	0.9019	10.05	7.36	1.37	1.28						
	2-Wire voice unbundled Georgia basic dialing port - PBX LD DDD Terminal Port			UEPPX	UEPPU	0.9019	10.05	7.36	1.37	1.28						
	2-Wire voice unbundled Georgia basic dialing port - PBX LD Terminal Switchboard Port			UEPPX	UEPPV	0.9019	10.05	7.36	1.37	1.28						
	2-Wire voice unbundled Georgia basic dialing port - PBX LD Terminal Switchboard DDD Capable Port			UEPPX	UEPPW	0.9019	10.05	7.36	1.37	1.28						
	2-Wire voice unbundled Georgia basic dialing port - PBX 2-Way Trunk			UEPPX	UEPPC	0.9019	10.05	7.36	1.37	1.28						
LOCAL NUMBER PORTABILITY																
	Local Number Portability (1 per port)			UEPPX	LNPCP	3.15	0.00	0.00								
FEATURES																
	All Features Offered			UEPPX	UEPVF	0.775	0.00	0.00								
NONRECURRING CHARGES (NRCs) - CURRENTLY COMBINED																
	2-Wire Voice Grade Loop/ Line Port Combination (PBX) - Conversion - Switch-As-Is			UEPPX	USAC2		0.10	0.10								
	2-Wire Voice Grade Loop/ Line Port Combination (PBX) - Conversion - Switch with Change			UEPPX	USACC		0.10	0.10								
ADDITIONAL NRCs																

CATEGORY	RATE ELEMENTS	Interim	Zone	BCS	USOC	RATES ($)					Svc Order Submitted Elec per LSR	Svc Order Submitted Manually per LSR	Attachment: 2 Incremental Charge - Manual Svc Order vs. Electronic-1st	Attachment: 2 Incremental Charge - Manual Svc Order vs. Electronic-Add'l	Exhibit: A Incremental Charge - Manual Svc Order vs. Electronic-Disc 1st	Exhibit: A Incremental Charge - Manual Svc Order vs. Electronic-Disc Add'l
						Rec	Nonrecurring		Nonrecurring Disconnect		OSS Rates ($)					
							First	Add'l	First	Add'l	SOMEC	SOMAN	SOMAN	SOMAN	SOMAN	SOMAN
	2-Wire Voice Grade Loop/ Line Port Combination (PBX) - Subsequent Activity			UEPPX	USAS2	0.00	0.00	0.00								
	PBX Subsequent Activity - Change/Rearrange Multiline Hunt Group						6.70	6.70								
	Unbundled Miscellaneous Rate Element, Tag Loop at End User Premise			UEPPX	URETL		8.33	0.83								
OFF/ON PREMISES EXTENSION CHANNELS																
	Local Channel Voice grade, per termination		1	UEPPX	P2JHX	11.57	79.85	24.65	18.92	7.87						
	Local Channel Voice grade, per termination		2	UEPPX	P2JHX	16.95	79.85	24.65	18.92	7.87						
	Local Channel Voice grade, per termination		3	UEPPX	P2JHX	33.08	79.85	24.65	18.92	7.87						
	Non-Wire Direct Serve Channel Voice Grade		1	UEPPX	SDD2X	12.74	56.92	7.70	4.40	0.02						
	Non-Wire Direct Serve Channel Voice Grade		2	UEPPX	SDD2X	19.76	56.92	7.70	4.40	0.02						
	Non-Wire Direct Serve Channel Voice Grade		3	UEPPX	SDD2X	37.18	56.92	7.70	4.40	0.02						
INTEROFFICE TRANSPORT																
	Interoffice Transport - Dedicated - 2 Wire Voice Grade - Facility Termination			UEPPX	U1TV2	12.87	48.46	19.48	16.58	5.00						
	Interoffice Transport - Dedicated - 2 Wire Voice Grade - Per Mile or Fraction Mile			UEPPX	U1TVM	0.0057	0.00	0.00								
2-WIRE VOICE GRADE LOOP WITH 2-WIRE ANALOG LINE COIN PORT																
UNE Port/Loop Combination Rates																
	2-Wire VG Coin Port/Loop Combo – Zone 1		1			10.46										
	2-Wire VG Coin Port/Loop Combo – Zone 2		2			15.76										
	2-Wire VG Coin Port/Loop Combo – Zone 3		3			32.56										
UNE Loop Rates																
	2-Wire Voice Grade Loop (SL1) - Zone 1		1	UEPCO	UEPLX	9.56										
	2-Wire Voice Grade Loop (SL1) - Zone 2		2	UEPCO	UEPLX	14.86										
	2-Wire Voice Grade Loop (SL1) - Zone 3		3	UEPCO	UEPLX	31.66										
2-Wire Voice Grade Line Ports (COIN)																
	2-Wire Coin 2-Way with Operator Screening (GA)			UEPCO	UEPGC	0.9019	10.05	7.36	1.37	1.28						
	2-Wire Coin 2-Way with Operator Screening and Blocking: 011, 900/976, 1+DDD (GA)			UEPCO	UEP2G	0.9019	10.05	7.36	1.37	1.28						
	2-Wire Coin 2-Way with Operator Screening and 011 Blocking (GA)			UEPCO	UEPGA	0.9019	10.05	7.36	1.37	1.28						
	2-Wire Coin 2-Way with Operator Screening and 900/976 Blocking (GA)			UEPCO	UEPGB	0.9019	10.05	7.36	1.37	1.28						
	2-Wire Coin 2-Way with Operator Screening and Blocking: 900/976, 1+DDD, 011+, and Local (GA)			UEPCO	UEPCH	0.9019	10.05	7.36	1.37	1.28						
	2-Wire Coin Outward with Operator Screening and 011 Blocking (GA, KY, MS)			UEPCO	UEPRJ	0.9019	10.05	7.36	1.37	1.28						
	2-Wire Coin Outward with Operator Screening and Blocking: 900/976, 1+DDD, 011+, and Local (FL, GA)			UEPCO	UEPCQ	0.9019	10.05	7.36	1.37	1.28						
	2-Wire 2-Way Smartline with 900/976 (all states except LA)			UEPCO	UEPCK	0.9019	10.05	7.36	1.37	1.28						
	2-Wire Coin Outward Smartline with 900/976 (all states except LA)			UEPCO	UEPCR	0.9019	10.05	7.36	1.37	1.28						
ADDITIONAL UNE COIN PORT/LOOP (RC)																
	UNE Coin Port/Loop Combo Usage (Flat Rate)			UEPCO	URECU	3.59	0.00	0.00	0.00	0.00						
LOCAL NUMBER PORTABILITY																
	Local Number Portability (1 per port)			UEPCO	LNPCX	0.35										
NONRECURRING CHARGES - CURRENTLY COMBINED																
	2-Wire Voice Grade Loop / Line Port Combination - Conversion - Switch-as-is			UEPCO	USAC2		0.10	0.10								
	2-Wire Voice Grade Loop / Line Port Combination - Conversion - Switch with change			UEPCO	USACC		0.10	0.10								
ADDITIONAL NRCs																
	2-Wire Voice Grade Loop/Line Port Combination - Subsequent Activity			UEPCO	USAS2		0.00	0.00								
	Unbundled Miscellaneous Rate Element, Tag Loop at End User Premise			UEPCO	URETL		8.33	0.83								
2-WIRE VOICE LOOP/ 2WIRE VOICE GRADE IO TRANSPORT/ 2-WIRE LINE PORT (RES)																

UNBUNDLED NETWORK ELEMENTS - Georgia														Attachment: 2		Exhibit: A	
CATEGORY	RATE ELEMENTS	Interim	Zone	BCS	USOC	RATES ($)					Svc Order Submitted Elec per LSR	Svc Order Submitted Manually per LSR	Incremental Charge - Manual Svc Order vs. Electronic-1st	Incremental Charge - Manual Svc Order vs. Electronic-Add'l	Incremental Charge - Manual Svc Order vs. Electronic-Disc 1st	Incremental Charge - Manual Svc Order vs. Electronic-Disc Add'l
						Rec	Nonrecurring		Nonrecurring Disconnect		OSS Rates ($)					
							First	Add'l	First	Add'l	SOMEC	SOMAN	SOMAN	SOMAN	SOMAN	SOMAN
	UNE Port/Loop Combination Rates															
	2-Wire VG Loop/IO Tranport/Port Combo - Zone 1		1			25.53										
	2-Wire VG Loop/IO Tranport/Port Combo - Zone 2		2			30.92										
	2-Wire VG Loop/IO Tranport/Port Combo - Zone 3		3			47.04										
	UNE Loop Rates															
	2-Wire Voice Grade Loop (SL2) - Zone 1		1	UEPFR	UECF2	11.57										
	2-Wire Voice Grade Loop (SL2) - Zone 2		2	UEPFR	UECF2	16.95										
	2-Wire Voice Grade Loop (SL2) - Zone 3		3	UEPFR	UECF2	33.08										
	2-Wire Voice Grade Line Port Rates (Res)															
	2-Wire voice unbundled port - residence			UEPFR	UEPRL	1.09	166.05	43.66	41.89	15.44						
	2-Wire voice unbundled port with Caller ID - res			UEPFR	UEPRC	1.09	166.05	43.66	41.89	15.44						
	2-Wire voice unbundled port outgoing only - res			UEPFR	UEPRO	1.09	166.05	43.66	41.89	15.44						
	2-Wire voice unbundles res, low usage line port with Caller ID (LUM)			UEPFR	UEPAP	1.09	166.05	43.66	41.89	15.44						
	2-Wire voice unbundled Georgia basic dialing port, without Caller ID capability - res			UEPFR	UEPWC	1.09	166.05	43.66	41.89	15.44						
	2-Wire voice unbundled Georgia basic dialing port for use with Caller ID - res			UEPFR	UEPWQ	1.09	166.05	43.66	41.89	15.44						
	2-Wire voice unbundled Georgia basic dialing port - outgoing only			UEPFR	UEPWR	1.09	166.05	43.66	41.89	15.44						
	INTEROFFICE TRANSPORT															
	Interoffice Transport - Dedicated - 2 Wire Voice Grade - Facility Termination			UEPFR	U1TV2	12.87	48.46	19.48	16.58	5.00						
	Interoffice Transport - Dedicated - 2 Wire Voice Grade - Per Mile or Fraction Mile			UEPFR	1L5XX	0.0057	0.00	0.00								
	FEATURES															
	All Features Offered			UEPFR	UEPVF	0.775	0.00	0.00								
	LOCAL NUMBER PORTABILITY															
	Local Number Portability (1 per port)			UEPFR	LNPCX	0.35										
	NONRECURRING CHARGES (NRCs) - CURRENTLY COMBINED															
	2-Wire Loop / Dedicated IO Transport / 2 Wire Line Port Combination - Conversion - Switch-as-is			UEPFR	USAC2		7.85	1.86								
	2-Wire Loop / Dedicated IO Transport / 2 Wire Line Port Combination - Conversion - Switch-With-Change			UEPFR	USACC		7.85	1.86								
	Unbundled Miscellaneous Rate Element, Tag Designed Loop at End User Premise			UEPFR	URETN		11.19	1.10								
	2-WIRE VOICE LOOP/ 2WIRE VOICE GRADE IO TRANSPORT/ 2-WIRE LINE PORT (BUS)															
	UNE Port/Loop Combination Rates															
	2-Wire VG Loop/IO Tranport/Port Combo - Zone 1		1			25.53										
	2-Wire VG Loop/IO Tranport/Port Combo - Zone 2		2			30.92										
	2-Wire VG Loop/IO Tranport/Port Combo - Zone 3		3			47.04										
	UNE Loop Rates															
	2-Wire Voice Grade Loop (SL2) - Zone 1		1	UEPFB	UECF2	11.57										
	2-Wire Voice Grade Loop (SL2) - Zone 2		2	UEPFB	UECF2	16.95										
	2-Wire Voice Grade Loop (SL2) - Zone 3		3	UEPFB	UECF2	33.08										
	2-Wire Voice Grade Line Port (Bus)															
	2-Wire voice unbundled port without Caller ID - bus			UEPFB	UEPBL	1.09	166.05	43.66	41.89	15.44						
	2-Wire voice unbundled port with Caller + E484 ID - bus			UEPFB	UEPBC	1.09	166.05	43.66	41.89	15.44						
	2-Wire voice unbundled port outgoing only - bus			UEPFB	UEPBO	1.09	166.05	43.66	41.89	15.44						
	2-Wire voice unbundled incoming only port with Caller ID - Bus			UEPFB	UEPB1	1.09	166.05	43.66	41.89	15.44						
	2-Wire voice unbundled Georgia basic dialing port, without Caller ID capability - bus			UEPFB	UEPWD	1.09	166.05	43.66	41.89	15.44						
	2-Wire voice unbundled Georgia basic dialing port for use with Caller ID - bus			UEPFB	UEPWP	1.09	166.05	43.66	41.89	15.44						
	LOCAL NUMBER PORTABILITY															
	Local Number Portability (1 per port)			UEPFB	LNPCX	0.35										
	INTEROFFICE TRANSPORT															
	Interoffice Transport - Dedicated - 2 Wire Voice Grade - Facility Termination			UEPFB	U1TV2	12.87	48.46	19.48	16.58	5.00						

UNBUNDLED NETWORK ELEMENTS - Georgia													Attachment: 2		Exhibit: A	
CATEGORY	RATE ELEMENTS	Interim	Zone	BCS	USOC	RATES ($)					Svc Order Submitted Elec per LSR	Svc Order Submitted Manually per LSR	Incremental Charge - Manual Svc Order vs. Electronic-1st	Incremental Charge - Manual Svc Order vs. Electronic-Add'l	Incremental Charge - Manual Svc Order vs. Electronic-Disc 1st	Incremental Charge - Manual Svc Order vs. Electronic-Disc Add'l
						Rec	Nonrecurring		Nonrecurring Disconnect		OSS Rates ($)					
							First	Add'l	First	Add'l	SOMEC	SOMAN	SOMAN	SOMAN	SOMAN	SOMAN
	Interoffice Transport - Dedicated - 2 Wire Voice Grade - Per Mile or Fraction Mile			UEPFB	1L5XX	0.0057	0.00	0.00								
FEATURES																
	All Features Offered			UEPFB	UEPVF	0.775	0.00	0.00								
NONRECURRING CHARGES (NRCs) - CURRENTLY COMBINED																
	2-Wire Loop / Dedicated IO Transport / 2 Wire Line Port Combination - Conversion - Switch-as-is			UEPFB	USAC2		7.85	1.86								
	2-Wire Loop / Dedicated IO Transport / 2 Wire Line Port Combination - Conversion - Switch with change			UEPFB	USACC		7.85	1.86								
	Unbundled Miscellaneous Rate Element, Tag Designed Loop at End User Premise			UEPFB	URETN		11.19	1.10								
2-WIRE VOICE LOOP/ 2WIRE VOICE GRADE IO TRANSPORT/ 2-WIRE LINE PORT (PBX)																
UNE Port/Loop Combination Rates																
	2-Wire VG Loop/IO Tranport/Port Combo - Zone 1		1			25.53										
	2-Wire VG Loop/IO Tranport/Port Combo - Zone 2		2			30.92										
	2-Wire VG Loop/IO Tranport/Port Combo - Zone 3		3			47.04										
UNE Loop Rates																
	2-Wire Voice Grade Loop (SL2) - Zone 1		1	UEPFP	UECF2	11.57										
	2-Wire Voice Grade Loop (SL2) - Zone 2		2	UEPFP	UECF2	16.95										
	2-Wire Voice Grade Loop (SL2) - Zone 3		3	UEPFP	UECF2	33.08										
2-Wire Voice Grade Line Port Rates (BUS - PBX)																
	Line Side Unbundled Combination 2-Way PBX Trunk Port - Bus			UEPFP	UEPPC	1.09	166.05	43.66	41.89	15.44						
	Line Side Unbundled Outward PBX Trunk Port - Bus			UEPFP	UEPPO	1.09	166.05	43.66	41.89	15.44						
	Line Side Unbundled Incoming PBX Trunk Port - Bus			UEPFP	UEPP1	1.09	166.05	43.66	41.89	15.44						
	2-Wire Voice Unbundled PBX LD Terminal Ports			UEPFP	UEPLD	1.09	166.05	43.66	41.89	15.44						
	2-Wire Voice Unbundled 2-Way Combination PBX Usage Port			UEPFP	UEPXA	1.09	166.05	43.66	41.89	15.44						
	2-Wire Voice Unbundled PBX Toll Terminal Hotel Ports			UEPFP	UEPXB	1.09	166.05	43.66	41.89	15.44						
	2-Wire Voice Unbundled PBX LD DDD Terminals Port			UEPFP	UEPXC	1.09	166.05	43.66	41.89	15.44						
	2-Wire Voice Unbundled PBX LD Terminal Switchboard Port			UEPFP	UEPXD	1.09	166.05	43.66	41.89	15.44						
	2-Wire Voice Unbundled PBX LD Terminal Switchboard IDD Capable Port			UEPFP	UEPXE	1.09	166.05	43.66	41.89	15.44						
	2-Wire Voice Unbundled 2-Way PBX Hotel/Hospital Economy Administrative Calling Port			UEPFP	UEPXL	1.09	166.05	43.66	41.89	15.44						
	2-Wire Voice Unbundled 2-Way PBX Hotel/Hospital Economy Room Calling Port			UEPFP	UEPXM	1.09	166.05	43.66	41.89	15.44						
	2-Wire Voice Unbundled 1-Way Outgoing PBX Hotel/Hospital Discount Room Calling Port			UEPFP	UEPXO	1.09	166.05	43.66	41.89	15.44						
	2-Wire Voice Unbundled 1-Way Outgoing PBX Measured Port			UEPFP	UEPXS	1.09	166.05	43.66	41.89	15.44						
	2-Wire voice unbundled Georgia basic dialing port - 1-Way Oudial Trunk			UEPFP	UEPWS	1.09	166.05	43.66	41.89	15.44						
	2-Wire voice unbundled Georgia basic dialing port - 2-Way Trunk			UEPFP	UEPWT	1.09	166.05	43.66	41.89	15.44						
LOCAL NUMBER PORTABILITY																
	Local Number Portability (1 per port)			UEPFP	LNPCP	3.15	0.00	0.00								
INTEROFFICE TRANSPORT																
	Interoffice Transport - Dedicated - 2 Wire Voice Grade - Facility Termination			UEPFP	U1TV2	12.87	48.46	19.48	16.58	5.00						
	Interoffice Transport - Dedicated - 2 Wire Voice Grade - Per Mile or Fraction Mile			UEPFP	1L5XX	0.0057	0.00	0.00								
FEATURES																
	All Features Offered			UEPFP	UEPVF	0.775	0.00	0.00								
NONRECURRING CHARGES (NRCs) - CURRENTLY COMBINED																
	2-Wire Loop / Dedicated IO Transport / 2 Wire Line Port Combination - Conversion - Switch-as-is			UEPFP	USAC2		7.85	1.86								
	2-Wire Loop / Dedicated IO Transport / 2 Wire Line Port Combination - Conversion - Switch with change			UEPFP	USACC		7.85	1.86								
	Unbundled Miscellaneous Rate Element, Tag Designed Loop at End User Premise			UEPFP	URETN		11.19	1.10								

UNBUNDLED NETWORK ELEMENTS - Georgia													Attachment: 2		Exhibit: A	
CATEGORY	RATE ELEMENTS	Interim	Zone	BCS	USOC	RATES ($)					Svc Order Submitted Elec per LSR	Svc Order Submitted Manually per LSR	Incremental Charge - Manual Svc Order vs. Electronic-1st	Incremental Charge - Manual Svc Order vs. Electronic-Add'l	Incremental Charge - Manual Svc Order vs. Electronic-Disc 1st	Incremental Charge - Manual Svc Order vs. Electronic-Disc Add'l
						Rec	Nonrecurring		Nonrecurring Disconnect		OSS Rates ($)					
							First	Add'l	First	Add'l	SOMEC	SOMAN	SOMAN	SOMAN	SOMAN	SOMAN
UNBUNDLED PORT/LOOP COMBINATIONS - COST BASED RATES																
2-WIRE VOICE GRADE LOOP- BUS ONLY - WITH 2-WIRE DID TRUNK PORT																
UNE Port/Loop Combination Rates																
	2-Wire VG Loop/2-Wire DID Trunk Port Combo - UNE Zone 1		1			17.05										
	2-Wire VG Loop/2-Wire DID Trunk Port Combo - UNE Zone 2		2			22.44										
	2-Wire VG Loop/2-Wire DID Trunk Port Combo - UNE Zone 3		3			38.56										
UNE Loop Rates																
	2-Wire Analog Voice Grade Loop - (SL2) - UNE Zone 1		1	UEPPX	UECD1	11.57										
	2-Wire Analog Voice Grade Loop - (SL2) - UNE Zone 2		2	UEPPX	UECD1	16.95										
	2-Wire Analog Voice Grade Loop - (SL2) - UNE Zone 3		3	UEPPX	UECD1	33.08										
UNE Port Rate																
	Exchange Ports - 2-Wire DID Port			UEPPX	UEPD1	5.48	174.55	13.64	59.31	4.27						
NONRECURRING CHARGES - CURRENTLY COMBINED																
	2-Wire Voice Grade Loop / 2-Wire DID Trunk Port Combination - Switch-as-is			UEPPX	USAC1		6.66	1.86								
	2-Wire Voice Grade Loop / 2-Wire DID Trunk Port Conversion with BellSouth Allowable Changes			UEPPX	USA1C		6.66	1.86								
ADDITIONAL NRCs																
	Unbundled Miscellaneous Rate Element, Tag Designed Loop at End User Premise			UEPPX	URETN		11.19	1.10								
Telephone Number/Trunk Group Establisment Charges																
	DID Trunk Termination (One Per Port)			UEPPX	NDT	0.00	0.00	0.00								
	DID Numbers, Establish Trunk Group and Provide First Group of 20 DID Numbers			UEPPX	NDZ	0.00	0.00	0.00								
	Additional DID Numbers for each Group of 20 DID Numbers			UEPPX	ND4	0.00	0.00	0.00								
	DID Numbers, Non- consecutive DID Numbers , Per Number			UEPPX	ND5	0.00	0.00	0.00								
	Reserve Non-Consecutive DID numbers			UEPPX	ND6	0.00	0.00	0.00								
	Reserve DID Numbers			UEPPX	NDV	0.00	0.00	0.00								
LOCAL NUMBER PORTABILITY																
	Local Number Portability (1 per port)			UEPPX	LNPCP	3.15	0.00	0.00								
2-WIRE ISDN DIGITAL GRADE LOOP WITH 2-WIRE ISDN DIGITAL LINE SIDE PORT																
UNE Port/Loop Combination Rates																
	2W ISDN Digital Grade Loop/2W ISDN Digital Line Side Port - UNE Zone 1		1	UEPPB UEPPR		19.44										
	2W ISDN Digital Grade Loop/2W ISDN Digital Line Side Port - UNE Zone 2		2	UEPPB UEPPR		24.45										
	2W ISDN Digital Grade Loop/2W ISDN Digital Line Side Port - UNE Zone 3		3	UEPPB UEPPR		38.09										
UNE Loop Rates																
	2-Wire ISDN Digital Grade Loop - UNE Zone 1		1	UEPPB UEPPR	USL2X	14.25										
	2-Wire ISDN Digital Grade Loop - UNE Zone 2		2	UEPPB UEPPR	USL2X	19.26										
	2-Wire ISDN Digital Grade Loop - UNE Zone 3		3	UEPPB UEPPR	USL2X	32.90										
UNE Port Rate																
	Exchange Port - 2-Wire ISDN Line Side Port			UEPPB UEPPR	UEPPB	5.19	161.36	141.68	43.68	8.37						
NONRECURRING CHARGES - CURRENTLY COMBINED																
	2-Wire ISDN Digital Grade Loop / 2-Wire ISDN Line Side Port Combination - Conversion			UEPPB UEPPR	USACB	0.00	42.52	26.99								
ADDITIONAL NRCs																
	2-Wire ISDN Loop / 2-Wire ISDN Port Combination - Sub Actvy - Non Feature/Add Trunk			UEPPB UEPPR	USASB		0.00									
	Unbundled Miscellaneous Rate Element, Tag Designed Loop at End User Premise			UEPPB UEPPR	URETN		11.19	1.10								
	Unbundled Miscellaneous Rate Element, Tag Loop at End User Premise			UEPPB UEPPR	URETL		8.33	0.83								
LOCAL NUMBER PORTABILITY																
	Local Number Portability (1 per port)			UEPPB UEPPR	LNPCX	0.35	0.00	0.00								
B-CHANNEL USER PROFILE ACCESS:																
	CVS/CSD (DMS/5ESS)			UEPPB UEPPR	U1UCA	0.00	0.00	0.00								

UNBUNDLED NETWORK ELEMENTS - Georgia														Attachment: 2		Exhibit: A	
CATEGORY	RATE ELEMENTS	Interim	Zone	BCS	USOC	RATES ($)					Svc Order Submitted Elec per LSR	Svc Order Submitted Manually per LSR	Incremental Charge - Manual Svc Order vs. Electronic-1st	Incremental Charge - Manual Svc Order vs. Electronic-Add'l	Incremental Charge - Manual Svc Order vs. Electronic-Disc 1st	Incremental Charge - Manual Svc Order vs. Electronic-Disc Add'l
						Rec	Nonrecurring		Nonrecurring Disconnect		OSS Rates ($)					
							First	Add'l	First	Add'l	SOMEC	SOMAN	SOMAN	SOMAN	SOMAN	SOMAN
	CVS (EWSD)			UEPPB UEPPR	U1UCB	0.00	0.00	0.00								
	CSD			UEPPB UEPPR	U1UCC	0.00	0.00	0.00								
B-CHANNEL AREA PLUS USER PROFILE ACCESS: (AL,KY,LA,MS SC,MS, & TN)																
USER TERMINAL PROFILE																
	User Terminal Profile (EWSD only)			UEPPB UEPPR	U1UMA	0.00	0.00	0.00								
VERTICAL FEATURES																
	All Vertical Features - One per Channel B User Profile			UEPPB UEPPR	UEPVF	0.775	0.00	0.00								
INTEROFFICE CHANNEL MILEAGE																
	Interoffice Channel mileage each, including first mile and facilities termination			UEPPB UEPPR	M1GNC	12.8757	48.46	19.48	16.58	5.00						
	Interoffice Channel mileage each, additional mile			UEPPB UEPPR	M1GNM	0.0057	0.00	0.00								
4-WIRE DS1 DIGITAL LOOP WITH 4-WIRE ISDN DS1 DIGITAL TRUNK PORT																
The UNE-P DS1 combination rates below for in this rate exhibit apply to the embedded base in place as of 10/2/03 until 4/1/04. After 4/1/04 these rates shall revert to tariff rates or a separate commercial agreement.																
Requests for 4-Wire DS1 Digital Loop with 4-Wire ISDN DS1 Digital Trunk Port after the effective date of this amendment shall be provided pursuant to a separate agreement or tariff at BellSouth's discretion.																
UNE Port/Loop Combination Rates																
	4W DS1 Digital Loop/4W ISDN DS1 Digital Trunk Port - UNE Zone 1		1	UEPPP		106.15										
	4W DS1 Digital Loop/4W ISDN DS1 Digital Trunk Port - UNE Zone 2		2	UEPPP		111.54										
	4W DS1 Digital Loop/4W ISDN DS1 Digital Trunk Port - UNE Zone 3		3	UEPPP		127.15										
UNE Loop Rates																
	4-Wire DS1 Digital Loop - UNE Zone 1		1	UEPPP	USL4P	41.02										
	4-Wire DS1 Digital Loop - UNE Zone 2		2	UEPPP	USL4P	46.41										
	4-Wire DS1 Digital Loop - UNE Zone 3		3	UEPPP	USL4P	62.03										
UNE Port Rate																
	Exchange Ports - 4-Wire ISDN DS1 Port (E:4/1/2004)			UEPPP	UEPPP	65.13	365.73	187.42	73.41	21.80						
NONRECURRING CHARGES - CURRENTLY COMBINED																
	4-Wire DS1 Digital Loop / 4-Wire ISDN DS1 Digital Trunk Port Combination - Conversion -Switch-as-is (E:4/1/2004)			UEPPP	USACP	0.00	122.56	77.97								
ADDITIONAL NRCs																
	4-Wire DS1 Loop/4-W ISDN Digtl Trk Port - Subsqt Actvy-Inward/two way Tel Nos. (except NC)			UEPPP	PR7TF		0.50									
	4-Wire DS1 Loop / 4-Wire ISDN DS1 Digital Trunk Port - Outward Tel Numbers (All States except NC)			UEPPP	PR7TO		10.72									
	4-Wire DS1 Loop / 4-Wire ISDN DS1 Digital Trk Port - Subsequent Inward Tel Numbers			UEPPP	PR7ZT		21.43									
LOCAL NUMBER PORTABILITY																
	Local Number Portability (1 per port)			UEPPP	LNPCN	1.75										
INTERFACE (Provsioning Only)																
	Voice/Data			UEPPP	PR71V	0.00	0.00	0.00								
	Digital Data			UEPPP	PR71D	0.00	0.00	0.00								
	Inward Data			UEPPP	PR71E	0.00	0.00	0.00								
New or Additional "B" Channel																
	New or Additional - Voice/Data B Channel			UEPPP	PR7BV	0.00	13.59									
	New or Additional - Digital Data B Channel			UEPPP	PR7BF	0.00	13.59									
	New or Additional Inward Data B Channel			UEPPP	PR7BD	0.00	13.59									
CALL TYPES																
	Inward			UEPPP	PR7C1	0.00	0.00	0.00								
	Outward			UEPPP	PR7CO	0.00	0.00	0.00								
	Two-way			UEPPP	PR7CC	0.00	0.00	0.00								
Interoffice Channel Mileage																
	Fixed Each Including First Mile			UEPPP	1LN1A	34.31	111.03	80.28	31.36	21.73						
	Each Airline-Fractional Additional Mile			UEPPP	1LN1B	0.1154										
4-WIRE DS1 DIGITAL LOOP WITH 4-WIRE DDITS TRUNK PORT																
The UNE-P DS1 combination rates below for in this rate exhibit apply to the embedded base in place as of 10/2/03 until 4/1/04. After 4/1/04 these rates shall revert to tariff rates or a separate commercial agreement.																
Requests for 4-Wire DS1 Digital Loop with 4-Wire DDITS after the effective date of this amendment shall be provided pursuant to a separate agreement or tariff at BellSouth's discretion.																
UNE Port/Loop Combination Rates																
	4W DS1 Digital Loop/4W DDITS Trunk Port - UNE Zone 1		1	UEPDC		82.22										

CATEGORY	RATE ELEMENTS	Interim	Zone	BCS	USOC	RATES ($)					Svc Order Submitted Elec per LSR	Svc Order Submitted Manually per LSR	Attachment: 2		Exhibit: A	
													Incremental Charge - Manual Svc Order vs. Electronic-1st	Incremental Charge - Manual Svc Order vs. Electronic-Add'l	Incremental Charge - Manual Svc Order vs. Electronic-Disc 1st	Incremental Charge - Manual Svc Order vs. Electronic-Disc Add'l
						Rec	Nonrecurring		Nonrecurring Disconnect		OSS Rates ($)					
							First	Add'l	First	Add'l	SOMEC	SOMAN	SOMAN	SOMAN	SOMAN	SOMAN
	4W DS1 Digital Loop/4W DDITS Trunk Port - UNE Zone 2		2	UEPDC		87.61										
	4W DS1 Digital Loop/4W DDITS Trunk Port - UNE Zone 3		3	UEPDC		103.22										
UNE Loop Rates																
	4-Wire DS1 Digital Loop - UNE Zone 1		1	UEPDC	USLDC	41.02										
	4-Wire DS1 Digital Loop - UNE Zone 2		2	UEPDC	USLDC	46.41										
	4-Wire DS1 Digital Loop - UNE Zone 3		3	UEPDC	USLDC	62.03										
UNE Port Rate																
	4-Wire DDITS Digital Trunk Port (E:4/1/2004)			UEPDC	UDD1T	41.20	392.25	185.06	80.17	7.86						
NONRECURRING CHARGES - CURRENTLY COMBINED																
	4-Wire DS1 Digital Loop / 4-Wire DDITS Trunk Port Combination - Switch-as-is (E:4/1/2004)			UEPDC	USAC4		132.19	66.79								
	4-Wire DS1 Digital Loop / 4-Wire DDITS Trunk Port Combination - Conversion with DS1 Changes (E:4/1/2004)			UEPDC	USAWA		132.19	66.79								
	4-Wire DS1 Digital Loop / 4-Wire DDITS Trunk Port Combination - Conversion with Change - Trunk (E:4/1/2004)			UEPDC	USAWB		132.19	66.79								
ADDITIONAL NRCs																
	4-Wire DS1 Loop / 4-Wire DDITS Trunk Port - Subsequent Service Activity Per Service Order			UEPDC	USAS4		0.00	0.00								
	4-Wire DS1 Loop / 4-Wire DDITS Trunk Port - NRC - Subsequent Channel Activation/Chan - 2-Way Trunk			UEPDC	UDTTA		13.95	13.95								
	4-Wire DS1 Loop / 4-Wire DDITS Trunk Port - Subsequent Channel Activation/Chan - 1-Way Outward Trunk			UEPDC	UDTTB		13.95	13.95								
	4-Wire DS1 Loop / 4-Wire DDITS Trunk Port - Subsqnt Channel Activation/Chan Inward Trunk w/out DID			UEPDC	UDTTC		13.95	13.95								
	4-Wire DS1 Loop / 4-Wire DDITS Trunk Port - Subsqnt Chan Activation Per Chan - Inward Trunk with DID			UEPDC	UDTTD		13.95	13.95								
	4-Wire DS1 Loop / 4-Wire DDITS Trunk Port - Subsqnt Chan Activation / Chan - 2-Way DID w User Trans			UEPDC	UDTTE		13.95	13.95								
BIPOLAR 8 ZERO SUBSTITUTION																
	B8ZS -Superframe Format			UEPDC	CCOSF		0.00i	392.25s								
	B8ZS - Extended Superframe Format			UEPDC	CCOEF		0.00i	392.25s								
Alternate Mark Inversion																
	AMI -Superframe Format			UEPDC	MCOSF		0.00	0.00								
	AMI - Extended SuperFrame Format			UEPDC	MCOPO		0.00	0.00								
Telephone Number/Trunk Group Establisment Charges																
	Telephone Number for 2-Way Trunk Group			UEPDC	UDTGX	0.00										
	Telephone Number for 1-Way Outward Trunk Group			UEPDC	UDTGY	0.00										
	Telephone Number for 1-Way Inward Trunk Group Without DID			UEPDC	UDTGZ	0.00										
	DID Numbers, Establish Trunk Group and Provide First Group of 20 DID Numbers			UEPDC	NDZ	0.00	0.00	0.00								
	DID Numbers for each Group of 20 DID Numbers			UEPDC	ND4	0.00										
	DID Numbers, Non- consecutive DID Numbers , Per Number			UEPDC	ND5	0.00										
	Reserve Non-Consecutive DID Nos.			UEPDC	ND6	0.00	0.00	0.00								
	Reserve DID Numbers			UEPDC	NDV	0.00	0.00	0.00								
Dedicated DS1 (Interoffice Channel Mileage) - FX/FCO for 4-Wire DS1 Digital Loop with 4-Wire DDITS Trunk Port																
	Interoffice Channel Mileage - Fixed rate 0-8 miles (Facilities Termination)			UEPDC	1LNO1	34.19	111.03	80.28	31.36	21.73						
	Interoffice Channel Mileage - Additional rate per mile - 0-8 miles			UEPDC	1LNOA	0.1154	0.00	0.00								
	Interoffice Channel Mileage - Fixed rate 9-25 miles (Facilities Termination)			UEPDC	1LNO2	0.00	0.00	0.00								
	Interoffice Channel Mileage - Additional rate per mile - 9-25 miles			UEPDC	1LNOB	0.1154	0.00	0.00								
	Interoffice Channel Mileage - Fixed rate 25+ miles (Facilities Termination)			UEPDC	1LNO3	0.00	0.00	0.00								
	Interoffice Channel Mileage - Additional rate per mile - 25+ miles			UEPDC	1LNOC	0.1154	0.00	0.00								
	Local Number Portability, per DS0 Activated			UEPDC	LNPCP	3.15										
	Central Office Termininating Point			UEPDC	CTG	0.00										

UNBUNDLED NETWORK ELEMENTS - Georgia													Attachment: 2		Exhibit: A	
CATEGORY	RATE ELEMENTS	Interim	Zone	BCS	USOC	RATES ($)					Svc Order Submitted Elec per LSR	Svc Order Submitted Manually per LSR	Incremental Charge - Manual Svc Order vs. Electronic-1st	Incremental Charge - Manual Svc Order vs. Electronic-Add'l	Incremental Charge - Manual Svc Order vs. Electronic-Disc 1st	Incremental Charge - Manual Svc Order vs. Electronic-Disc Add'l
						Rec	Nonrecurring		Nonrecurring Disconnect		OSS Rates ($)					
							First	Add'l	First	Add'l	SOMEC	SOMAN	SOMAN	SOMAN	SOMAN	SOMAN
	4-WIRE DS1 LOOP WITH CHANNELIZATION WITH PORT															
	System is 1 DS1 Loop, 1 D4 Channel Bank, and up to 24 Feature Activations															
	Each System can have up to 24 combinations of rates depending on type and number of ports used															
	The UNE-P DS1 combination rates below for 4-Wire DS1 Loop with Channelization with Port in this rate exhibit apply to the embedded base in place as of 10/2/03 until 4/1/04. After 4/1/04 these rates shall revert to tariff rates or a separate agreement.															
	Requests for 4-Wire DS1 Loop with Channelization with Port after the effective date of this amendment shall be provided pursuant to a separate agreement or tariff at BellSouth's discretion.															
	UNE DS1 Loop															
	4-Wire DS1 Loop - UNE Zone 1		1	UEPMG	USLDC	41.02	0.00	0.00								
	4-Wire DS1 Loop - UNE Zone 2		2	UEPMG	USLDC	46.41	0.00	0.00								
	4-Wire DS1 Loop - UNE Zone 3		3	UEPMG	USLDC	62.03	0.00	0.00								
	UNE DSO Channelization Capacities (D4 Channel Bank Configurations)															
	24 DSO Channel Capacity - 1 per DS1			UEPMG	VUM24	43.04	0.00	0.00								
	48 DSO Channel Capacity - 1 per 2 DS1s			UEPMG	VUM48	86.06	0.00	0.00								
	96 DSO Channel Capacity -1per 4 DS1s			UEPMG	VUM96	172.16	0.00	0.00								
	144 DS0 Channel Capacity - 1 per 6 DS1s			UEPMG	VUM14	258.24	0.00	0.00								
	192 DS0 Channel Capacity -1 per 8 DS1s			UEPMG	VUM19	344.32	0.00	0.00								
	240 DS0 Channel Capacity - 1 per 10 DS1s			UEPMG	VUM2O	430.40	0.00	0.00								
	288 DS0 Channel Capacity - 1 per 12 DS1s			UEPMG	VUM28	516.48	0.00	0.00								
	384 DS0 Channel Capacity - 1 per 16 DS1s			UEPMG	VUM38	688.64	0.00	0.00								
	480 DS0 Channel Capacity - 1 per 20 DS1s			UEPMG	VUM4O	860.80	0.00	0.00								
	576 DS0 Channel Capacity -1 per 24 DS1s			UEPMG	VUM57	1,032.96	0.00	0.00								
	672 DS0 Channel Capacity - 1 per 28 DS1s			UEPMG	VUM67	1,205.12	0.00	0.00								
	Non-Recurring Charges (NRC) Associated with 4-Wire DS1 Loop with Channeliztion with Port - Conversion Charge Based on a System															
	A Minimum System configuration is One (1) DS1, One (1) D4 Channel Bank, and Up To 24 DSO Ports with Feature Activations.															
	Multiples of this configuration functioning as one are considered Add'l after the minimum system configuration is counted.															
	NRC - Conversion (Currently Combined) with or without BellSouth Allowed Changes			UEPMG	USAC4	0.00	153.24	8.37								
	System Additions at End User Locations Where 4-Wire DS1 Loop with Channelization with Port Combination Currently Exists and															
	New (Not Currently Combined) in all states, except in Density Zone 1 of Top 8 MSA's															
	1 DS1/D4 Channel Bank - Additionally Add NRC for each Port and Assoc Fea Activation (E:4/1/2004)			UEPMG	VUMD4	0.00	379.04	253.97	69.43	8.35						
	Bipolar 8 Zero Substitution															
	Clear Channel Capability Format, superframe - Subsequent Activity Only			UEPMG	CCOSF	0.00	0.00i	392.25s								
	Clear Channel Capability Format - Extended Superframe - Subsequent Activity Only			UEPMG	CCOEF	0.00	0.00i	392.25s								
	Alternate Mark Inversion (AMI)															
	Superframe Format			UEPMG	MCOSF	0.00	0.00	0.00								
	Extended Superframe Format			UEPMG	MCOPO	0.00	0.00	0.00								
	Exchange Ports Associated with 4-Wire DS1 Loop with Channelization with Port															
	Exchange Ports															
	Line Side Combination Channelized PBX Trunk Port - Business (E:4/1/2004)			UEPPX	UEPCX	1.09	0.00	0.00	0.00	0.00						
	Line Side Outward Channelized PBX Trunk Port - Business (E:4/1/2004)			UEPPX	UEPOX	1.09	0.00	0.00	0.00	0.00						
	Line Side Inward Only Channelized PBX Trunk Port without DID (E:4/1/2004)			UEPPX	UEP1X	1.09	0.00	0.00	0.00	0.00						
	2-Wire Trunk Side Unbundled Channelized DID Trunk Port (E:4/1/2004)			UEPPX	UEPDM	5.50	0.00	0.00	0.00	0.00						
	Feature Activations - Unbundled Loop Concentration															
	Feature (Service) Activation for each Line Port Terminated in D4 Bank			UEPPX	1PQWM	0.4689	12.90	6.80	1.96	1.95						
	Feature (Service) Activation for each Trunk Port Terminated in D4 Bank			UEPPX	1PQWU	0.4689	38.09	9.18	26.77	5.34						
	Telephone Number/ Group Establishment Charges for DID Service															
	DID Trunk Termination (1 per Port)			UEPPX	NDT	0.00	0.00	0.00								
	Estab Trk Grp and Provide 1st 20 DID Nos. (FL,GA, NC,& SC)			UEPPX	NDZ	0.00	0.00	0.00								
	DID Numbers - groups of 20 - Valid all States			UEPPX	ND4	0.00	0.00	0.00								
	Non-Consecutive DID Numbers - per number			UEPPX	ND5	0.00	0.00	0.00								
	Reserve Non-Consecutive DID Numbers			UEPPX	ND6	0.00	0.00	0.00								

UNBUNDLED NETWORK ELEMENTS - Georgia													Attachment: 2		Exhibit: A	
CATEGORY	RATE ELEMENTS	Interim	Zone	BCS	USOC	RATES ($)					Svc Order Submitted Elec per LSR	Svc Order Submitted Manually per LSR	Incremental Charge - Manual Svc Order vs. Electronic-1st	Incremental Charge - Manual Svc Order vs. Electronic-Add'l	Incremental Charge - Manual Svc Order vs. Electronic-Disc 1st	Incremental Charge - Manual Svc Order vs. Electronic-Disc Add'l
						Rec	Nonrecurring		Nonrecurring Disconnect		OSS Rates ($)					
							First	Add'l	First	Add'l	SOMEC	SOMAN	SOMAN	SOMAN	SOMAN	SOMAN
	Reserve DID Numbers			UEPPX	NDV	0.00	0.00	0.00								
Local Number Portability																
	Local Number Portability - 1 per port			UEPPX	LNPCP	3.15	0.00	0.00								
FEATURES - Vertical and Optional																
Local Switching Features Offered with Line Side Ports Only																
	All Features Available			UEPPX	UEPVF	0.775	0.00	0.00								
UNBUNDLED CENTREX PORT/LOOP COMBINATIONS - COST BASED RATES																
1. Cost Based Rates are applied where BellSouth is required by FCC and/or State Commission rule to provide Unbundled Local Switching or Switch Ports.																
2. Features shall apply to the Unbundled Port/Loop Combination - Cost Based Rate section in the same manner as they are applied to the Stand-Alone Unbundled Port section of this Rate Exhibit.																
3. End Office and Tandem Switching Usage and Common Transport Usage rates in the Port section of this rate exhibit shall apply to all combinations of loop/port network elements except for UNE Coin Port/Loop Combinations.																
4. The first and additional Port nonrecurring charges apply to Not Currently Combined Combos. For Currently Combined Combos, the nonrecurring charges shall be those identified in the Nonrecurring - Currently Combined sections. Additional NRCs may apply also and are categorized accordingly.																
5. Market Rates for Unbundled Centrex Port/Loop Combination will be negotiated on an Individual Case Basis, until further notice.																
UNE-P CENTREX - 1AESS - (Valid in AL,FL,GA,KY,LA,MS,&TN only)																
2-Wire VG Loop/2-Wire Voice Grade Port (Centrex) Combo																
UNE Port/Loop Combination Rates (Non-Design)																
	2-Wire VG Loop/2-Wire Voice Grade Port (Centrex) Port Combo - Non-Design		1	UEP91		10.46										
	2-Wire VG Loop/2-Wire Voice Grade Port (Centrex)Port Combo - Non-Design		2	UEP91		15.76										
	2-Wire VG Loop/2-Wire Voice Grade Port (Centrex)Port Combo - Non-Design		3	UEP91		32.56										
UNE Port/Loop Combination Rates (Design)																
	2-Wire VG Loop/2-Wire Voice Grade Port (Centrex) Port Combo - Design		1	UEP91		12.47										
	2-Wire VG Loop/2-Wire Voice Grade Port (Centrex)Port Combo - Design		2	UEP91		17.85										
	2-Wire VG Loop/2-Wire Voice Grade Port (Centrex)Port Combo - Design		3	UEP91		33.98										
UNE Loop Rate																
	2-Wire Voice Grade Loop (SL 1) - Zone 1		1	UEP91	UECS1	9.56										
	2-Wire Voice Grade Loop (SL 1) - Zone 2		2	UEP91	UECS1	14.86										
	2-Wire Voice Grade Loop (SL 1) - Zone 3		3	UEP91	UECS1	31.66										
	2-Wire Voice Grade Loop (SL 2) - Zone 1		1	UEP91	UECS2	11.57										
	2-Wire Voice Grade Loop (SL 2) - Zone 2		2	UEP91	UECS2	16.95										
	2-Wire Voice Grade Loop (SL 2) - Zone 3		3	UEP91	UECS2	33.08										
UNE Ports																
All States (Except North Carolina and Sout Carolina)																
	2-Wire Voice Grade Port (Centrex) Basic Local Area			UEP91	UEPYA	0.9019	10.05	7.36	1.37	1.28						
	2-Wire Voice Grade Port (Centrex 800 termination)Basic Local Area			UEP91	UEPYB	0.9019	10.05	7.36	1.37	1.28						
	2-Wire Voice Grade Port (Centrex with Caller ID)Note1 Basic Local Area			UEP91	UEPYH	0.9019	10.05	7.36	1.37	1.28						
	2-Wire Voice Grade Port (Centrex from diff Serving Wire Center) Note 2, 3 Basic Local Area			UEP91	UEPYM	0.9019	82.27	26.96	20.29	9.15						
	2-Wire Voice Grade Port, Diff Serving Wire Center - 800 Service Term - Basic Local Area			UEP91	UEPYZ	0.9019	82.27	26.96	20.29	9.15						
	2-Wire Voice Grade Port terminated in on Megalink or equivalent - Basic Local Area			UEP91	UEPY9	0.9019	10.05	7.36	1.37	1.28						
	2-Wire Voice Grade Port Terminated on 800 Service Term - Basic Local Area			UEP91	UEPY2	0.9019	10.05	7.36	1.37	1.28						
Georgia and Florida Only																
	2-Wire Voice Grade Port (Centrex)			UEP91	UEPHA	0.9019	10.05	7.36	1.37	1.28						
	2-Wire Voice Grade Port (Centrex 800 termination)			UEP91	UEPHB	0.9019	10.05	7.36	1.37	1.28						
	2-Wire Voice Grade Port (Centrex with Caller ID)1			UEP91	UEPHH	0.9019	10.05	7.36	1.37	1.28						
	2-Wire Voice Grade Port (Centrex from diff Serving Wire Center)2,3			UEP91	UEPHM	0.9019	82.27	26.96	20.29	9.15						
	2-Wire Voice Grade Port, Diff Serving Wire Center 2,3 - 800 Service Term			UEP91	UEPHZ	0.9019	82.27	26.96	20.29	9.15						

CATEGORY	RATE ELEMENTS	Interim	Zone	BCS	USOC	RATES ($)					Svc Order Submitted Elec per LSR	Svc Order Submitted Manually per LSR	Attachment: 2 Incremental Charge - Manual Svc Order vs. Electronic-1st	Attachment: 2 Incremental Charge - Manual Svc Order vs. Electronic-Add'l	Exhibit: A Incremental Charge - Manual Svc Order vs. Electronic-Disc 1st	Exhibit: A Incremental Charge - Manual Svc Order vs. Electronic-Disc Add'l
						Rec	Nonrecurring		Nonrecurring Disconnect		OSS Rates ($)					
							First	Add'l	First	Add'l	SOMEC	SOMAN	SOMAN	SOMAN	SOMAN	SOMAN
	2-Wire Voice Grade Port terminated in on Megalink or equivalent			UEP91	UEPH9	0.9019	10.05	7.36	1.37	1.28						
	2-Wire Voice Grade Port Terminated on 800 Service Term			UEP91	UEPH2	0.9019	10.05	7.36	1.37	1.28						
Local Switching																
	Centrex Intercom Funtionality, per port			UEP91	URECS	0.4237										
Local Number Portability																
	Local Number Portability (1 per port)			UEP91	LNPCC	0.35										
Features																
	All Standard Features Offered, per port			UEP91	UEPVF	0.775										
	All Select Features Offered, per port			UEP91	UEPVS	0.00	0.00									
	All Centrex Control Features Offered, per port			UEP91	UEPVC	0.00										
NARS																
	Unbundled Network Access Register - Combination			UEP91	UARCX	0.00	0.00	0.00	0.00	0.00						
	Unbundled Network Access Register - Indial			UEP91	UAR1X	0.00	0.00	0.00	0.00	0.00						
	Unbundled Network Access Register - Outdial			UEP91	UAROX	0.00	0.00	0.00	0.00	0.00						
Miscellaneous Terminations																
2-Wire Trunk Side																
	Trunk Side Terminations, each			UEP91	CENA6	5.50	122.26	18.65	54.82	3.45						
Interoffice Channel Mileage - 2-Wire																
	Interoffice Channel Facilities Termination - Voice Grade			UEP91	M1GBC	12.87	48.46	19.48	16.58	5.00						
	Interoffice Channel mileage, per mile or fraction of mile			UEP91	M1GBM	0.0057										
Feature Activations (DS0) Centrex Loops on Channelized DS1 Service																
D4 Channel Bank Feature Activations																
	Feature Activation on D-4 Channel Bank Centrex Loop Slot			UEP91	1PQWS	0.4689										
	Feature Activation on D-4 Channel Bank FX line Side Loop Slot			UEP91	1PQW6	0.4689										
	Feature Activation on D-4 Channel Bank FX Trunk Side Loop Slot			UEP91	1PQW7	0.4689										
	Feature Activation on D-4 Channel Bank Centrex Loop Slot - Different Wire Center			UEP91	1PQWP	0.4689										
	Feature Activation on D-4 Channel Bank Private Line Loop Slot			UEP91	1PQWV	0.4689										
	Feature Activation on D-4 Channel Bank Tjie Line/Trunk Loop Slot			UEP91	1PQWQ	0.4689										
	Feature Activation on D-4 Channel Bank WATS Loop Slot			UEP91	1PQWA	0.4689										
Non-Recurring Charges (NRC) Associated with UNE-P Centrex																
	Conversion - Currently Combined Switch-As-Is with allowed changes, per port			UEP91	USAC2		0.10	0.10								
	New Centrex Standard Common Block			UEP91	M1ACS	0.00	317.90	37.59	48.99	5.92						
	New Centrex Customized Common Block			UEP91	M1ACC	0.00	317.90	37.59	48.99	5.92						
	Secondary Block, per Block			UEP91	M2CC1	0.00	77.10									
	NAR Establishment Charge, Per Occasion			UEP91	URECA	0.00	0.00									
Additional Non-Recurring Charges (NRC)																
	Unbundled Miscellaneous Rate Element, Tag Loop at End Use Premise			UEP91	URETL		8.33	0.83								
	Unbundled Miscellaneous Rate Element, Tag Design Loop at End Use Premise			UEP91	URETN		11.19	1.10								
UNE-P CENTREX - 5ESS (Valid in All States)																
2-Wire VG Loop/2-Wire Voice Grade Port (Centrex) Combo																
UNE Port/Loop Combination Rates (Non-Design)																
	2-Wire VG Loop/2-Wire Voice Grade Port (Centrex) Port Combo - Non-Design		1	UEP95		10.46										
	2-Wire VG Loop/2-Wire Voice Grade Port (Centrex)Port Combo - Non-Design		2	UEP95		15.76										
	2-Wire VG Loop/2-Wire Voice Grade Port (Centrex)Port Combo - Non-Design		3	UEP95		32.56										
UNE Port/Loop Combination Rates (Design)																
	2-Wire VG Loop/2-Wire Voice Grade Port (Centrex) Port Combo - Design		1	UEP95		12.47										

CATEGORY	RATE ELEMENTS	Interim	Zone	BCS	USOC	RATES ($)					Svc Order Submitted Elec per LSR	Svc Order Submitted Manually per LSR	Attachment: 2		Exhibit: A	
													Incremental Charge - Manual Svc Order vs. Electronic-1st	Incremental Charge - Manual Svc Order vs. Electronic-Add'l	Incremental Charge - Manual Svc Order vs. Electronic-Disc 1st	Incremental Charge - Manual Svc Order vs. Electronic-Disc Add'l
						Rec	Nonrecurring		Nonrecurring Disconnect		OSS Rates ($)					
							First	Add'l	First	Add'l	SOMEC	SOMAN	SOMAN	SOMAN	SOMAN	SOMAN
	2-Wire VG Loop/2-Wire Voice Grade Port (Centrex)Port Combo - Design		2	UEP95		17.85										
	2-Wire VG Loop/2-Wire Voice Grade Port (Centrex)Port Combo - Design		3	UEP95		33.98										
UNE Loop Rate																
	2-Wire Voice Grade Loop (SL 1) - Zone 1		1	UEP95	UECS1	9.56										
	2-Wire Voice Grade Loop (SL 1) - Zone 2		2	UEP95	UECS1	14.86										
	2-Wire Voice Grade Loop (SL 1) - Zone 3		3	UEP95	UECS1	31.66										
	2-Wire Voice Grade Loop (SL 2) - Zone 1		1	UEP95	UECS2	11.57										
	2-Wire Voice Grade Loop (SL 2) - Zone 2		2	UEP95	UECS2	16.95										
	2-Wire Voice Grade Loop (SL 2) - Zone 3		3	UEP95	UECS2	33.08										
UNE Port Rate																
All States																
	2-Wire Voice Grade Port (Centrex) Basic Local Area			UEP95	UEPYA	0.9019	10.05	7.36	1.37	1.28						
	2-Wire Voice Grade Port (Centrex 800 termination)			UEP95	UEPYB	0.9019	10.05	7.36	1.37	1.28						
	2-Wire Voice Grade Port (Centrex with Caller ID)1Basic Local Area			UEP95	UEPYH	0.9019	10.05	7.36	1.37	1.28						
	2-Wire Voice Grade Port (Centrex from diff Serving Wire Center)2,3 Basic Local Area			UEP95	UEPYM	0.9019	82.27	26.96	20.29	9.15						
	2-Wire Voice Grade Port, Diff Serving Wire Center 2,3 - 800 Service Term - Basic Local Area			UEP95	UEPYZ	0.9019	82.27	26.96	20.29	9.15						
	2-Wire Voice Grade Port terminated in on Megalink or equivalent - Basic Local Area			UEP95	UEPY9	0.9019	10.05	7.36	1.37	1.28						
	2-Wire Voice Grade Port Terminated on 800 Service Term - Basic Local Area			UEP95	UEPY2	0.9019	10.05	7.36	1.37	1.28						
FL & GA Only																
	2-Wire Voice Grade Port (Centrex)			UEP95	UEPHA	0.9019	10.05	7.36	1.37	1.28						
	2-Wire Voice Grade Port (Centrex 800 termination)			UEP95	UEPHB	0.9019	10.05	7.36	1.37	1.28						
	2-Wire Voice Grade Port (Centrex with Caller ID)1			UEP95	UEPHH	0.9019	10.05	7.36	1.37	1.28						
	2-Wire Voice Grade Port (Centrex from diff Serving Wire Center)2,3			UEP95	UEPHM	0.9019	82.27	26.96	20.29	9.15						
	2-Wire Voice Grade Port, Diff Serving Wire Center - 800 Service Term 2,3			UEP95	UEPHZ	0.9019	82.27	26.96	20.29	9.15						
	2-Wire Voice Grade Port terminated in on Megalink or equivalent			UEP95	UEPH9	0.9019	10.05	7.36	1.37	1.28						
	2-Wire Voice Grade Port Terminated on 800 Service Term			UEP95	UEPH2	0.9019	10.05	7.36	1.37	1.28						
Local Switching																
	Centrex Intercom Funtionality, per port			UEP95	URECS	0.4237										
Local Number Portability																
	Local Number Portability (1 per port)			UEP95	LNPCC	0.35										
Features																
	All Standard Features Offered, per port			UEP95	UEPVF	0.775										
	All Select Features Offered, per port			UEP95	UEPVS	0.00	0.00									
	All Centrex Control Features Offered, per port			UEP95	UEPVC	0.00										
NARS																
	Unbundled Network Access Register - Combination			UEP95	UARCX	0.00	0.00	0.00	0.00	0.00						
	Unbundled Network Access Register - Indial			UEP95	UAR1X	0.00	0.00	0.00	0.00	0.00						
	Unbundled Network Access Register - Outdial			UEP95	UAROX	0.00	0.00	0.00	0.00	0.00						
Miscellaneous Terminations																
2-Wire Trunk Side																
	Trunk Side Terminations, each			UEP95	CEND6	5.50	122.26	18.65	54.82	3.45						
4-Wire Digital (1.544 Megabits)																
	DS1 Circuit Terminations, each			UEP95	M1HD1	41.20	200.96	93.00	65.81	2.33						
	DS0 Channels Activated, each			UEP95	M1HDO	0.00	13.95									
Interoffice Channel Mileage - 2-Wire																
	Interoffice Channel Facilities Termination			UEP95	M1GBC	12.87	48.46	19.48	16.58	5.00						
	Interoffice Channel mileage, per mile or fraction of mile			UEP95	M1GBM	0.0057										
Feature Activations (DS0) Centrex Loops on Channelized DS1 Service																
D4 Channel Bank Feature Activations																

UNBUNDLED NETWORK ELEMENTS - Georgia														Attachment: 2		Exhibit: A	
CATEGORY		RATE ELEMENTS	Interim	Zone	BCS	USOC	RATES ($)					Svc Order Submitted Elec per LSR	Svc Order Submitted Manually per LSR	Incremental Charge - Manual Svc Order vs. Electronic-1st	Incremental Charge - Manual Svc Order vs. Electronic-Add'l	Incremental Charge - Manual Svc Order vs. Electronic-Disc 1st	Incremental Charge - Manual Svc Order vs. Electronic-Disc Add'l
							Rec	Nonrecurring		Nonrecurring Disconnect		OSS Rates ($)					
								First	Add'l	First	Add'l	SOMEC	SOMAN	SOMAN	SOMAN	SOMAN	SOMAN
		Feature Activation on D-4 Channel Bank Centrex Loop Slot			UEP95	1PQWS	0.4689										
		Feature Activation on D-4 Channel Bank FX line Side Loop Slot			UEP95	1PQW6	0.4689										
		Feature Activation on D-4 Channel Bank FX Trunk Side Loop Slot			UEP95	1PQW7	0.4689										
		Feature Activation on D-4 Channel Bank Centrex Loop Slot - Different Wire Center			UEP95	1PQWP	0.4689										
		Feature Activation on D-4 Channel Bank Private Line Loop Slot			UEP95	1PQWV	0.4689										
		Feature Activation on D-4 Channel Bank Tjie Line/Trunk Loop Slot			UEP95	1PQWQ	0.4689										
		Feature Activation on D-4 Channel Bank WATS Loop Slot			UEP95	1PQWA	0.4689										
	Non-Recurring Charges (NRC) Associated with UNE-P Centrex																
		NRC Conversion Currently Combined Switch-As-Is with allowed changes, per port			UEP95	USAC2		0.10	0.10								
		New Centrex Standard Common Block			UEP95	M1ACS	0.00	317.90	37.59	48.99	5.92						
		New Centrex Customized Common Block			UEP95	M1ACC	0.00	317.90	37.59	48.99	5.92						
		NAR Establishment Charge, Per Occasion			UEP95	URECA	0.00	0.00									
	Additional Non-Recurring Charges (NRC)																
		Unbundled Miscellaneous Rate Element, Tag Loop at End Use Premise			UEP95	URETL		8.33	0.83								
		Unbundled Miscellaneous Rate Element, Tag Design Loop at End Use Premise			UEP95	URETN		11.19	1.10								
	UNE-P CENTREX - DMS100 (Valid in All States)																
	2-Wire VG Loop/2-Wire Voice Grade Port (Centrex) Combo																
	UNE Port/Loop Combination Rates (Non-Design)																
		2-Wire VG Loop/2-Wire Voice Grade Port (Centrex) Port Combo - Non-Design		1	UEP9D		10.46										
		2-Wire VG Loop/2-Wire Voice Grade Port (Centrex)Port Combo - Non-Design		2	UEP9D		15.76										
		2-Wire VG Loop/2-Wire Voice Grade Port (Centrex)Port Combo - Non-Design		3	UEP9D		32.56										
	UNE Port/Loop Combination Rates (Design)																
		2-Wire VG Loop/2-Wire Voice Grade Port (Centrex) Port Combo - Design		1	UEP9D		12.47										
		2-Wire VG Loop/2-Wire Voice Grade Port (Centrex)Port Combo - Design		2	UEP9D		17.85										
		2-Wire VG Loop/2-Wire Voice Grade Port (Centrex)Port Combo - Design		3	UEP9D		33.98										
	UNE Loop Rate																
		2-Wire Voice Grade Loop (SL 1) - Zone 1		1	UEP9D	UECS1	9.56										
		2-Wire Voice Grade Loop (SL 1) - Zone 2		2	UEP9D	UECS1	14.86										
		2-Wire Voice Grade Loop (SL 1) - Zone 3		3	UEP9D	UECS1	31.66										
		2-Wire Voice Grade Loop (SL 2) - Zone 1		1	UEP9D	UECS2	11.57										
		2-Wire Voice Grade Loop (SL 2) - Zone 2		2	UEP9D	UECS2	16.95										
		2-Wire Voice Grade Loop (SL 2) - Zone 3		3	UEP9D	UECS2	33.08										
	UNE Port Rate																
	ALL STATES																
		2-Wire Voice Grade Port (Centrex) Basic Local Area			UEP9D	UEPYA	0.9019	10.05	7.36	1.37	1.28						
		2-Wire Voice Grade Port (Centrex 800 termination)Basic Local Area			UEP9D	UEPYB	0.9019	10.05	7.36	1.37	1.28						
		2-Wire Voice Grade Port (Centrex / EBS-PSET)3Basic Local Area			UEP9D	UEPYC	0.9019	10.05	7.36	1.37	1.28						
		2-Wire Voice Grade Port (Centrex / EBS-M5009)3Basic Local Area			UEP9D	UEPYD	0.9019	10.05	7.36	1.37	1.28						
		2-Wire Voice Grade Port (Centrex / EBS-M5209))3 Basic Local Area			UEP9D	UEPYE	0.9019	10.05	7.36	1.37	1.28						
		2-Wire Voice Grade Port (Centrex / EBS-M5112))3 Basic Local Area			UEP9D	UEPYF	0.9019	10.05	7.36	1.37	1.28						

CATEGORY	RATE ELEMENTS	Interim	Zone	BCS	USOC	RATES ($)					Svc Order Submitted Elec per LSR	Svc Order Submitted Manually per LSR	Attachment: 2 Incremental Charge - Manual Svc Order vs. Electronic-1st	Attachment: 2 Incremental Charge - Manual Svc Order vs. Electronic-Add'l	Exhibit: A Incremental Charge - Manual Svc Order vs. Electronic-Disc 1st	Exhibit: A Incremental Charge - Manual Svc Order vs. Electronic-Disc Add'l
						Rec	Nonrecurring		Nonrecurring Disconnect		OSS Rates ($)					
							First	Add'l	First	Add'l	SOMEC	SOMAN	SOMAN	SOMAN	SOMAN	SOMAN
	2-Wire Voice Grade Port (Centrex / EBS-M5312))3Basic Local Area			UEP9D	UEPYG	0.9019	10.05	7.36	1.37	1.28						
	2-Wire Voice Grade Port (Centrex / EBS-M5008))3 Basic Local Area			UEP9D	UEPYT	0.9019	10.05	7.36	1.37	1.28						
	2-Wire Voice Grade Port (Centrex / EBS-M5208))3 Basic Local Area			UEP9D	UEPYU	0.9019	10.05	7.36	1.37	1.28						
	2-Wire Voice Grade Port (Centrex / EBS-M5216))3 Basic Local Area			UEP9D	UEPYV	0.9019	10.05	7.36	1.37	1.28						
	2-Wire Voice Grade Port (Centrex / EBS-M5316))3 Basic Local Area			UEP9D	UEPY3	0.9019	10.05	7.36	1.37	1.28						
	2-Wire Voice Grade Port (Centrex with Caller ID) Basic Local Area			UEP9D	UEPYH	0.9019	10.05	7.36	1.37	1.28						
	2-Wire Voice Grade Port (Centrex/Caller ID/Msg Wtg Lamp Indication))4 Basic Local Area			UEP9D	UEPYW	0.9019	10.05	7.36	1.37	1.28						
	2-Wire Voice Grade Port (Centrex/Msg Wtg Lamp Indication))4 Basic Local Area			UEP9D	UEPYJ	0.9019	10.05	7.36	1.37	1.28						
	2-Wire Voice Grade Port (Centrex from diff Serving Wire Center) 2,3-Basic Local Area			UEP9D	UEPYM	0.9019	82.27	26.96	20.29	9.15						
	2-Wire Voice Grade Port (Centrex/differ SWC /EBS-PSET)2,3,4 Basic Local Area			UEP9D	UEPYO	0.9019	82.27	26.96	20.29	9.15						
	2-Wire Voice Grade Port (Centrex/differ SWC /EBS-M5009)2,3,4 Basic Local Area			UEP9D	UEPYP	0.9019	82.27	26.96	20.29	9.15						
	2-Wire Voice Grade Port (Centrex/differ SWC /EBS-5209)2,3,4 Basic Local Area			UEP9D	UEPYQ	0.9019	82.27	26.96	20.29	9.15						
	2-Wire Voice Grade Port (Centrex/differ SWC /EBS-M5112)2,3,4 Basic Local Area			UEP9D	UEPYR	0.9019	82.27	26.96	20.29	9.15						
	2-Wire Voice Grade Port (Centrex/differ SWC /EBS-M5312)2,3,4 Basic Local Area			UEP9D	UEPYS	0.9019	82.27	26.96	20.29	9.15						
	2-Wire Voice Grade Port (Centrex/differ SWC /EBS-M5008)2,3,4 Basic Local Area			UEP9D	UEPY4	0.9019	82.27	26.96	20.29	9.15						
	2-Wire Voice Grade Port (Centrex/differ SWC /EBS-M5208)2, 3 Basic Local Area			UEP9D	UEPY5	0.9019	82.27	26.96	20.29	9.15						
	2-Wire Voice Grade Port (Centrex/differ SWC /EBS-M5216)2,3,4 Basic Local Area			UEP9D	UEPY6	0.9019	82.27	26.96	20.29	9.15						
	2-Wire Voice Grade Port (Centrex/differ SWC /EBS-M5316)2,3,4 Basic Local Area			UEP9D	UEPY7	0.9019	82.27	26.96	20.29	9.15						
	2-Wire Voice Grade Port, Diff Serving Wire Center - 800 Service Term 2,3			UEP9D	UEPYZ	0.9019	82.27	26.96	20.29	9.15						
	2-Wire Voice Grade Port terminated in on Megalink or equivalent Basic Local Area			UEP9D	UEPY9	0.9019	10.05	7.36	1.37	1.28						
	2-Wire Voice Grade Port Terminated on 800 Service Term Basic Local Area			UEP9D	UEPY2	0.9019	10.05	7.36	1.37	1.28						
FL & GA Only																
	2-Wire Voice Grade Port (Centrex)			UEP9D	UEPHA	0.9019	10.05	7.36	1.37	1.28						
	2-Wire Voice Grade Port (Centrex 800 termination)			UEP9D	UEPHB	0.9019	10.05	7.36	1.37	1.28						
	2-Wire Voice Grade Port (Centrex / EBS-PSET)4			UEP9D	UEPHC	0.9019	10.05	7.36	1.37	1.28						
	2-Wire Voice Grade Port (Centrex / EBS-M5009)4			UEP9D	UEPHD	0.9019	10.05	7.36	1.37	1.28						
	2-Wire Voice Grade Port (Centrex / EBS-M5209)4			UEP9D	UEPHE	0.9019	10.05	7.36	1.37	1.28						
	2-Wire Voice Grade Port (Centrex / EBS-M5112)4			UEP9D	UEPHF	0.9019	10.05	7.36	1.37	1.28						
	2-Wire Voice Grade Port (Centrex / EBS-M5312)4			UEP9D	UEPHG	0.9019	10.05	7.36	1.37	1.28						
	2-Wire Voice Grade Port (Centrex / EBS-M5008)4			UEP9D	UEPHT	0.9019	10.05	7.36	1.37	1.28						
	2-Wire Voice Grade Port (Centrex / EBS-M5208)4			UEP9D	UEPHU	0.9019	10.05	7.36	1.37	1.28						
	2-Wire Voice Grade Port (Centrex / EBS-M5216)4			UEP9D	UEPHV	0.9019	10.05	7.36	1.37	1.28						
	2-Wire Voice Grade Port (Centrex / EBS-M5316)4			UEP9D	UEPH3	0.9019	10.05	7.36	1.37	1.28						
	2-Wire Voice Grade Port (Centrex with Caller ID)			UEP9D	UEPHH	0.9019	10.05	7.36	1.37	1.28						
	2-Wire Voice Grade Port (Centrex/Caller ID/Msg Wtg Lamp Indication)4			UEP9D	UEPHW	0.9019	10.05	7.36	1.37	1.28						
	2-Wire Voice Grade Port (Centrex/Msg Wtg Lamp Indication)4			UEP9D	UEPHJ	0.9019	10.05	7.36	1.37	1.28						

UNBUNDLED NETWORK ELEMENTS - Georgia														Attachment: 2		Exhibit: A	
CATEGORY		RATE ELEMENTS	Interim	Zone	BCS	USOC	RATES ($)					Svc Order Submitted Elec per LSR	Svc Order Submitted Manually per LSR	Incremental Charge - Manual Svc Order vs. Electronic-1st	Incremental Charge - Manual Svc Order vs. Electronic-Add'l	Incremental Charge - Manual Svc Order vs. Electronic-Disc 1st	Incremental Charge - Manual Svc Order vs. Electronic-Disc Add'l
							Rec	Nonrecurring		Nonrecurring Disconnect		OSS Rates ($)					
								First	Add'l	First	Add'l	SOMEC	SOMAN	SOMAN	SOMAN	SOMAN	SOMAN
		2-Wire Voice Grade Port (Centrex from diff Serving Wire Center) 2,3			UEP9D	UEPHM	0.9019	82.27	26.96	20.29	9.15						
		2-Wire Voice Grade Port (Centrex/differ SWC /EBS-PSET)2,3,4			UEP9D	UEPHO	0.9019	82.27	26.96	20.29	9.15						
		2-Wire Voice Grade Port (Centrex/differ SWC /EBS-M5009)2,3,4			UEP9D	UEPHP	0.9019	82.27	26.96	20.29	9.15						
		2-Wire Voice Grade Port (Centrex/differ SWC /EBS-5209)2,3,4			UEP9D	UEPHQ	0.9019	82.27	26.96	20.29	9.15						
		2-Wire Voice Grade Port (Centrex/differ SWC /EBS-M5112)2,3,4			UEP9D	UEPHR	0.9019	82.27	26.96	20.29	9.15						
		2-Wire Voice Grade Port (Centrex/differ SWC /EBS-M5312)2, 3,4			UEP9D	UEPHS	0.9019	82.27	26.96	20.29	9.15						
		2-Wire Voice Grade Port (Centrex/differ SWC /EBS-M5008)2,3,4			UEP9D	UEPH4	0.9019	82.27	26.96	20.29	9.15						
		2-Wire Voice Grade Port (Centrex/differ SWC /EBS-M5208)2,3,4			UEP9D	UEPH5	0.9019	82.27	26.96	20.29	9.15						
		2-Wire Voice Grade Port (Centrex/differ SWC /EBS-M5216)2,3,4			UEP9D	UEPH6	0.9019	82.27	26.96	20.29	9.15						
		2-Wire Voice Grade Port (Centrex/differ SWC /EBS-M5316)2,3,4			UEP9D	UEPH7	0.9019	82.27	26.96	20.29	9.15						
		2-Wire Voice Grade Port, Diff Serving Wire Center - 800 Service Term 2,3			UEP9D	UEPHZ	0.9019	82.27	26.96	20.29	9.15						
		2-Wire Voice Grade Port terminated in on Megalink or equivalent			UEP9D	UEPH9	0.9019	10.05	7.36	1.37	1.28						
		2-Wire Voice Grade Port Terminated on 800 Service Term			UEP9D	UEPH2	0.9019	10.05	7.36	1.37	1.28						
	Local Switching																
		Centrex Intercom Funtionality, per port			UEP9D	URECS	0.4237										
	Local Number Portability																
		Local Number Portability (1 per port)			UEP9D	LNPCC	0.35										
	Features																
		All Standard Features Offered, per port			UEP9D	UEPVF	0.775										
		All Select Features Offered, per port			UEP9D	UEPVS	0.00	0.00									
		All Centrex Control Features Offered, per port			UEP9D	UEPVC	0.00										
	NARS																
		Unbundled Network Access Register - Combination			UEP9D	UARCX	0.00	0.00	0.00	0.00	0.00						
		Unbundled Network Access Register - Inward			UEP9D	UAR1X	0.00	0.00	0.00	0.00	0.00						
		Unbundled Network Access Register - Outdial			UEP9D	UAROX	0.00	0.00	0.00	0.00	0.00						
	Miscellaneous Terminations																
	2-Wire Trunk Side																
		Trunk Side Terminations, each			UEP9D	CEND6	5.50	122.26	18.65	54.82	3.45						
	4-Wire Digital (1.544 Megabits)																
		DS1 Circuit Terminations, each			UEP9D	M1HD1	41.20	200.96	93.00	65.81	2.33						
		DS0 Channels Activiated per Channel			UEP9D	M1HDO	0.00	13.95									
	Interoffice Channel Mileage - 2-Wire																
		Interoffice Channel Facilities Termination			UEP9D	M1GBC	12.87	48.46	19.48	16.58	5.00						
		Interoffice Channel mileage, per mile or fraction of mile			UEP9D	M1GBM	0.0057										
	Feature Activations (DS0) Centrex Loops on Channelized DS1 Service																
	D4 Channel Bank Feature Activations																
		Feature Activation on D-4 Channel Bank Centrex Loop Slot			UEP9D	1PQWS	0.4689										
		Feature Activation on D-4 Channel Bank FX line Side Loop Slot			UEP9D	1PQW6	0.4689										
		Feature Activation on D-4 Channel Bank FX Trunk Side Loop Slot			UEP9D	1PQW7	0.4689										
		Feature Activation on D-4 Channel Bank Centrex Loop Slot - Different Wire Center			UEP9D	1PQWP	0.4689										
		Feature Activation on D-4 Channel Bank Private Line Loop Slot			UEP9D	1PQWV	0.4689										
		Feature Activation on D-4 Channel Bank Tjie Line/Trunk Loop Slot			UEP9D	1PQWQ	0.4689										

UNBUNDLED NETWORK ELEMENTS - Georgia														Attachment: 2		Exhibit: A	
CATEGORY		RATE ELEMENTS	Interim	Zone	BCS	USOC	RATES ($)					Svc Order Submitted Elec per LSR	Svc Order Submitted Manually per LSR	Incremental Charge - Manual Svc Order vs. Electronic-1st	Incremental Charge - Manual Svc Order vs. Electronic-Add'l	Incremental Charge - Manual Svc Order vs. Electronic-Disc 1st	Incremental Charge - Manual Svc Order vs. Electronic-Disc Add'l
							Rec	Nonrecurring		Nonrecurring Disconnect		OSS Rates ($)					
								First	Add'l	First	Add'l	SOMEC	SOMAN	SOMAN	SOMAN	SOMAN	SOMAN
		Feature Activation on D-4 Channel Bank WATS Loop Slot			UEP9D	1PQWA	0.4689										
	Non-Recurring Charges (NRC) Associated with UNE-P Centrex																
		NRC Conversion Currently Combined Switch-As-Is with allowed changes, per port			UEP9D	USAC2		0.10	0.10								
		New Centrex Standard Common Block			UEP9D	M1ACS	0.00	317.90	37.59	48.99	5.92						
		New Centrex Customized Common Block			UEP9D	M1ACC	0.00	317.90	37.59	48.99	5.92						
		NAR Establishment Charge, Per Occasion			UEP9D	URECA	0.00	0.00									
	Additional Non-Recurring Charges (NRC)																
		Unbundled Miscellaneous Rate Element, Tag Loop at End Use Premise			UEP9D	URETL		8.33	0.83								
		Unbundled Miscellaneous Rate Element, Tag Design Loop at End Use Premise			UEP9D	URETN		11.19	1.10								
	Additional Non-Recurring Charges (NRC)																
		Unbundled Miscellaneous Rate Element, Tag Loop at End Use Premise			UEP9E	URETL											
		Unbundled Miscellaneous Rate Element, Tag Design Loop at End Use Premise			UEP9E	URETN											
	Note 1 - Required Port for Centrex Control in 1AESS, 5ESS & EWSD																
	Note 2 - Requres Interoffice Channel Mileage																
	Note 3 - Installation is combination of Installation charge for SL2 Loop and Port																
	Note 4 - Requires Specific Customer Premises Equipment																
	Note: Rates displaying an "R" in Interim column are interim and subject to rate true-up as set forth in General Terms and Conditions.																

UNBUNDLED NETWORK ELEMENTS - Kentucky														Attachment: 2		Exhibit: A	
CATEGORY		RATE ELEMENTS	Interim	Zone	BCS	USOC	RATES ($)					Svc Order Submitted Elec per LSR	Svc Order Submitted Manually per LSR	Incremental Charge - Manual Svc Order vs. Electronic-1st	Incremental Charge - Manual Svc Order vs. Electronic-Add'l	Incremental Charge - Manual Svc Order vs. Electronic-Disc 1st	Incremental Charge - Manual Svc Order vs. Electronic-Disc Add'l
							Rec	Nonrecurring		Nonrecurring Disconnect		OSS Rates ($)					
								First	Add'l	First	Add'l	SOMEC	SOMAN	SOMAN	SOMAN	SOMAN	SOMAN
	The "Zone" shown in the sections for stand-alone loops or loops as part of a combination refers to Geographically Deaveraged UNE Zones. To view Geographically Deaveraged UNE Zone Designations by Central Office, refer to internet Website: http://www.interconnection.bellsouth.com/become_a_clec/html/interconnection.htm																
OPERATIONAL SUPPORT SYSTEMS (OSS) - "REGIONAL RATES"																	
	NOTE: (1) CLEC should contact its contract negotiator if it prefers the "state specific" OSS charges as ordered by the State Commissions. The OSS charges currently contained in this rate exhibit are the BellSouth "regional" service ordering charges. CLEC may elect either the state specific Commission ordered rates for the service ordering charges, or CLEC may elect the regional service ordering charge, however, CLEC can not obtain a mixture of the two regardless if CLEC has a interconnection contract established in each of the 9 states.																
	NOTE: (2) Any element that can be ordered electronically will be billed according to the SOMEC rate listed in this category. Please refer to BellSouth's Local Ordering Handbook (LOH) to determine if a product can be ordered electronically. For those elements that cannot be ordered electronically at present per the LOH, the listed SOMEC rate in this category reflects the charge that would be billed to a CLEC once electronic ordering capabilities come on-line for that element. Otherwise, the manual ordering charge, SOMAN, will be applied to a CLECs bill when it submits an LSR to BellSouth.																
		OSS - Electronic Service Order Charge, Per Local Service Request (LSR) - UNE Only				SOMEC		3.50	0.00	3.50	0.00						
		OSS - Manual Service Order Charge, Per Local Service Request (LSR) - UNE Only				SOMAN		7.86	0.00	0.99	0.00						
UNE SERVICE DATE ADVANCEMENT CHARGE																	
	NOTE: The Expedite charge will be maintained commensurate with BellSouth's FCC No.1 Tariff, Section 5 as applicable.																
		UNE Expedite Charge per Circuit or Line Assignable USOC, per Day			UAL, UEANL, UCL, UEF, UDF, UEQ, UDL, UENTW, UDN, UEA, UHL, ULC, USL, U1T12, U1T48, U1TD1, U1TD3, U1TDX, U1TO3, U1TS1, U1TVX, UC1BC, UC1BL, UC1CC, UC1CL, UC1DC, UC1DL, UC1EC, UC1EL, UC1FC, UC1FL, UC1GC, UC1GL, UC1HC, UC1HL, UDL12, UDL48, UDLO3, UDLSX, UE3, ULD12, ULD48, ULDD1, ULDD3, ULDDX, ULDO3, ULDS1, ULDVX, UNC1X, UNC3X, UNCDX, UNCNX, UNCSX, UNCVX, UNLD1, UNLD3, UXTD1, UXTD3, UXTS1, U1TUC, U1TUD, U1TUB, U1TUA	SDASP		200.00									
UNBUNDLED EXCHANGE ACCESS LOOP																	
	2-WIRE ANALOG VOICE GRADE LOOP																
		2-Wire Analog Voice Grade Loop - Service Level 1- Zone 1		1	UEANL	UEAL2	10.56	46.66	22.57	26.65	7.65						
		2-Wire Analog Voice Grade Loop - Service Level 1- Zone 2		2	UEANL	UEAL2	15.34	46.66	22.57	26.65	7.65						
		2-Wire Analog Voice Grade Loop - Service Level 1- Zone 3		3	UEANL	UEAL2	31.11	46.66	22.57	26.65	7.65						
		2-Wire Analog Voice Grade Loop - Service Level 1- Zone 1		1	UEANL	UEASL	10.56	46.66	22.57	26.65	7.65						
		2-Wire Analog Voice Grade Loop - Service Level 1- Zone 2		2	UEANL	UEASL	15.34	46.66	22.57	26.65	7.65						
		2-Wire Analog Voice Grade Loop - Service Level 1- Zone 3		3	UEANL	UEASL	31.11	46.66	22.57	26.65	7.65						
		Unbundled Miscellaneous Rate Element, Tag Loop at End User Premise			UEANL	URETL		8.33	0.83								
		Loop Testing - Basic 1st Half Hour			UEANL	URET1		46.88	46.88								
		Loop Testing - Basic Additional Half Hour			UEANL	URETA		24.16	24.16								

UNBUNDLED NETWORK ELEMENTS - Kentucky														Attachment: 2		Exhibit: A	
CATEGORY		RATE ELEMENTS	Interim	Zone	BCS	USOC	RATES ($)					Svc Order Submitted Elec per LSR	Svc Order Submitted Manually per LSR	Incremental Charge - Manual Svc Order vs. Electronic-1st	Incremental Charge - Manual Svc Order vs. Electronic-Add'l	Incremental Charge - Manual Svc Order vs. Electronic-Disc 1st	Incremental Charge - Manual Svc Order vs. Electronic-Disc Add'l
							Rec	Nonrecurring		Nonrecurring Disconnect		OSS Rates ($)					
								First	Add'l	First	Add'l	SOMEC	SOMAN	SOMAN	SOMAN	SOMAN	SOMAN
		CLEC to CLEC Conversion Charge Without Outside Dispatch (UVL-SL1)			UEANL	UREWO		15.78	8.94								
		Unbundled Voice Loop, Non-Design Voice Loop, billing for BST providing make-up (Engineering Information - E.I.)			UEANL	UEANM		13.49	13.49								
		Manual Order Coordination for UVL-SL1s (per loop)			UEANL	UEAMC		9.00	9.00								
		Order Coordination for Specified Conversion Time for UVL-SL1 (per LSR)			UEANL	OCOSL		23.01	23.01								
	2-WIRE Unbundled COPPER LOOP																
		2-Wire Unbundled Copper Loop - Non-Designed Zone 1		1	UEQ	UEQ2X	10.58	44.97	20.89	25.64	6.65						
		2 Wire Unbundled Copper Loop - Non-Designed - Zone 2		2	UEQ	UEQ2X	11.51	44.97	20.89	25.64	6.65						
		2 Wire Unbundled Copper Loop - Non-Designed - Zone 3		3	UEQ	UEQ2X	13.19	44.97	20.89	25.64	6.65						
		Unbundled Miscellaneous Rate Element, Tag Loop at End User Premise			UEQ	URETL		8.33	0.83								
		Manual Order Coordination 2 Wire Unbundled Copper Loop - Non-Designed (per loop)			UEQ	USBMC		9.00	9.00								
		Unbundled Copper Loop, Non-Design Copper Loop, billing for BST providing make-up (Engineering Information - E.I.)			UEQ	UEQMU		13.49	13.49								
		Loop Testing - Basic 1st Half Hour			UEQ	URET1		46.88	46.88								
		Loop Testing - Basic Additional Half Hour			UEQ	URETA		24.16	24.16								
		CLEC to CLEC Conversion Charge Without Outside Dispatch (UCL-ND)			UEQ	UREWO		14.27	7.43								
UNBUNDLED EXCHANGE ACCESS LOOP																	
	2-WIRE ANALOG VOICE GRADE LOOP																
		2 Wire Analog Voice Grade Loop-Service Level 1-Line Splitting-Zone 1		1	UEPSR UEPSB	UEALS	10.56	46.66	22.57	26.65	7.65						
		2 Wire Analog Voice Grade Loop-Service Level 1-Line Splitting-Zone 1		1	UEPSR UEPSB	UEABS	10.56	46.66	22.57	26.65	7.65						
		2 Wire Analog Voice Grade Loop- Service Level 1-Line Splitting-Zone 2		2	UEPSR UEPSB	UEALS	15.34	46.66	22.57	26.65	7.65						
		2 Wire Analog Voice Grade Loop- Service Level 1-Line Splitting-Zone 2		2	UEPSR UEPSB	UEABS	15.34	46.66	22.57	26.65	7.65						
		2 Wire Analog Voice Grade Loop-Service Level 1-Line Splitting-Zone 3		3	UEPSR UEPSB	UEALS	31.11	46.66	22.57	26.65	7.65						
		2 Wire Analog Voice Grade Loop-Service Level 1-Line Splitting-Zone 3		3	UEPSR UEPSB	UEABS	31.11	46.66	22.57	26.65	7.65						
UNBUNDLED EXCHANGE ACCESS LOOP																	
	2-WIRE ANALOG VOICE GRADE LOOP																
		2-Wire Analog Voice Grade Loop - Service Level 2 w/Loop or Ground Start Signaling - Zone 1		1	UEA	UEAL2	12.67	134.89	81.87	73.65	14.88						
		2-Wire Analog Voice Grade Loop - Service Level 2 w/Loop or Ground Start Signaling - Zone 2		2	UEA	UEAL2	17.45	134.89	81.87	73.65	14.88						
		2-Wire Analog Voice Grade Loop - Service Level 2 w/Loop or Ground Start Signaling - Zone 3		3	UEA	UEAL2	33.22	134.89	81.87	73.65	14.88						
		Order Coordination for Specified Conversion Time (per LSR)			UEA	OCOSL		23.01									
		2-Wire Analog Voice Grade Loop - Service Level 2 w/Reverse Battery Signaling - Zone 1		1	UEA	UEAR2	12.67	134.89	81.87	73.65	14.88						
		2-Wire Analog Voice Grade Loop - Service Level 2 w/Reverse Battery Signaling - Zone 2		2	UEA	UEAR2	17.45	134.89	81.87	73.65	14.88						
		2-Wire Analog Voice Grade Loop - Service Level 2 w/Reverse Battery Signaling - Zone 3		3	UEA	UEAR2	33.22	134.89	81.87	73.65	14.88						
		Order Coordination for Specified Conversion Time (per LSR)			UEA	OCOSL		23.01									
		CLEC to CLEC Conversion Charge without outside dispatch			UEA	UREWO		87.72	36.36								
		Loop Tagging - Service Level 2 (SL2)			UEA	URETL		11.21	1.10								
	4-WIRE ANALOG VOICE GRADE LOOP																
		4-Wire Analog Voice Grade Loop - Zone 1		1	UEA	UEAL4	29.26	164.11	112.36	78.91	18.66						
		4-Wire Analog Voice Grade Loop - Zone 2		2	UEA	UEAL4	34.25	164.11	112.36	78.91	18.66						
		4-Wire Analog Voice Grade Loop - Zone 3		3	UEA	UEAL4	85.06	164.11	112.36	78.91	18.66						
		Order Coordination for Specified Conversion Time (per LSR)			UEA	OCOSL		23.01									
		CLEC to CLEC Conversion Charge without outside dispatch			UEA	UREWO		87.72	36.36								

CATEGORY	RATE ELEMENTS	Interim	Zone	BCS	USOC	RATES ($)					Svc Order Submitted Elec per LSR	Svc Order Submitted Manually per LSR	Attachment: 2 Incremental Charge - Manual Svc Order vs. Electronic-1st	Attachment: 2 Incremental Charge - Manual Svc Order vs. Electronic-Add'l	Exhibit: A Incremental Charge - Manual Svc Order vs. Electronic-Disc 1st	Exhibit: A Incremental Charge - Manual Svc Order vs. Electronic-Disc Add'l
						Rec	Nonrecurring		Nonrecurring Disconnect		OSS Rates ($)					
							First	Add'l	First	Add'l	SOMEC	SOMAN	SOMAN	SOMAN	SOMAN	SOMAN
2-WIRE ISDN DIGITAL GRADE LOOP																
	2-Wire ISDN Digital Grade Loop - Zone 1		1	UDN	U1L2X	18.44	146.77	95.02	71.38	13.83						
	2-Wire ISDN Digital Grade Loop - Zone 2		2	UDN	U1L2X	25.08	146.77	95.02	71.38	13.83						
	2-Wire ISDN Digital Grade Loop - Zone 3		3	UDN	U1L2X	42.87	146.77	95.02	71.38	13.83						
	Order Coordination For Specified Conversion Time (per LSR)			UDN	OCOSL		23.01									
	CLEC to CLEC Conversion Charge without outside dispatch			UDN	UREWO		91.63	44.16								
2-WIRE ASYMMETRICAL DIGITAL SUBSCRIBER LINE (ADSL) COMPATIBLE LOOP																
	2 Wire Unbundled ADSL Loop including manual service inquiry & facility reservation - Zone 1		1	UAL	UAL2X	10.82	141.98	79.73	69.02	11.47						
	2 Wire Unbundled ADSL Loop including manual service inquiry & facility reservation - Zone 2		2	UAL	UAL2X	11.79	141.98	79.73	69.02	11.47						
	2 Wire Unbundled ADSL Loop including manual service inquiry & facility reservation - Zone 3		3	UAL	UAL2X	12.87	141.98	79.73	69.02	11.47						
	Order Coordination for Specified Conversion Time (per LSR)			UAL	OCOSL		23.01									
	2 Wire Unbundled ADSL Loop without manual service inquiry & facility reservaton - Zone 1		1	UAL	UAL2W	10.82	121.18	69.00	69.09	11.54						
	2 Wire Unbundled ADSL Loop without manual service inquiry & facility reservaton - Zone 2		2	UAL	UAL2W	11.79	121.18	69.00	69.09	11.54						
	2 Wire Unbundled ADSL Loop without manual service inquiry & facility reservaton - Zone 3		3	UAL	UAL2W	12.87	121.18	69.00	69.09	11.54						
	Order Coordination for Specified Conversion Time (per LSR)			UAL	OCOSL		23.01									
	CLEC to CLEC Conversion Charge without outside dispatch			UAL	UREWO		86.20	40.40								
2-WIRE HIGH BIT RATE DIGITAL SUBSCRIBER LINE (HDSL) COMPATIBLE LOOP																
	2 Wire Unbundled HDSL Loop including manual service inquiry & facility reservation - Zone 1		1	UHL	UHL2X	8.75	151.54	89.29	69.09	11.54						
	2 Wire Unbundled HDSL Loop including manual service inquiry & facility reservation - Zone 2		2	UHL	UHL2X	9.56	151.54	89.29	69.09	11.54						
	2 Wire Unbundled HDSL Loop including manual service inquiry & facility reservation - Zone 3		3	UHL	UHL2X	10.61	151.54	89.29	69.09	11.54						
	Order Coordination for Specified Conversion Time (per LSR)			UHL	OCOSL		23.01									
	2 Wire Unbundled HDSL Loop without manual service inquiry and facility reservation - Zone 1		1	UHL	UHL2W	8.75	130.74	78.56	69.09	11.54						
	2 Wire Unbundled HDSL Loop without manual service inquiry and facility reservation - Zone 2		2	UHL	UHL2W	9.56	130.74	78.56	69.09	11.54						
	2 Wire Unbundled HDSL Loop without manual service inquiry and facility reservation - Zone 3		3	UHL	UHL2W	10.61	130.74	78.56	69.09	11.54						
	Order Coordination for Specified Conversion Time (per LSR)			UHL	OCOSL		23.01									
	CLEC to CLEC Conversion Charge without outside dispatch			UHL	UREWO		86.14	40.40								
4-WIRE HIGH BIT RATE DIGITAL SUBSCRIBER LINE (HDSL) COMPATIBLE LOOP																
	4 Wire Unbundled HDSL Loop including manual service inquiry and facility reservation - Zone 1		1	UHL	UHL4X	13.95	185.75	123.50	74.95	14.69						
	4-Wire Unbundled HDSL Loop including manual service inquiry and facility reservation - Zone 2	I	2	UHL	UHL4X	15.68	185.75	123.50	74.95	14.69						
	4-Wire Unbundled HDSL Loop including manual service inquiry and facility reservation - Zone 3		3	UHL	UHL4X	16.98	185.75	123.50	74.95	14.69						
	Order Coordination for Specified Conversion Time (per LSR)			UHL	OCOSL		23.01									
	4-Wire Unbundled HDSL Loop without manual service inquiry and facility reservation - Zone 1		1	UHL	UHL4W	13.95	164.95	114.04	77.32	15.80						
	4-Wire Unbundled HDSL Loop without manual service inquiry and facility reservation - Zone 2		2	UHL	UHL4W	15.68	164.95	114.04	77.32	15.80						
	4-Wire Unbundled HDSL Loop without manual service inquiry and facility reservation - Zone 3		3	UHL	UHL4W	16.98	164.95	114.04	77.32	15.80						
	Order Coordination for Specified Conversion Time (per LSR)			UHL	OCOSL		23.01									
	CLEC to CLEC Conversion Charge without outside dispatch			UHL	UREWO		86.14	40.40								
4-WIRE DS1 DIGITAL LOOP																
	4-Wire DS1 Digital Loop - Zone 1		1	USL	USLXX	86.47	306.69	174.44	65.83	14.55						
	4-Wire DS1 Digital Loop - Zone 2		2	USL	USLXX	114.10	306.69	174.44	65.83	14.55						
	4-Wire DS1 Digital Loop - Zone 3		3	USL	USLXX	297.76	306.69	174.44	65.83	14.55						
	Order Coordination for Specified Conversion Time (per LSR)			USL	OCOSL		23.01									

UNBUNDLED NETWORK ELEMENTS - Kentucky														Attachment: 2		Exhibit: A	
CATEGORY		RATE ELEMENTS	Interim	Zone	BCS	USOC	RATES ($)					Svc Order Submitted Elec per LSR	Svc Order Submitted Manually per LSR	Incremental Charge - Manual Svc Order vs. Electronic-1st	Incremental Charge - Manual Svc Order vs. Electronic-Add'l	Incremental Charge - Manual Svc Order vs. Electronic-Disc 1st	Incremental Charge - Manual Svc Order vs. Electronic-Disc Add'l
							Rec	Nonrecurring		Nonrecurring Disconnect		OSS Rates ($)					
								First	Add'l	First	Add'l	SOMEC	SOMAN	SOMAN	SOMAN	SOMAN	SOMAN
		CLEC to CLEC Conversion Charge without outside dispatch			USL	UREWO		101.09	43.04								
	4-WIRE 19.2, 56 OR 64 KBPS DIGITAL GRADE LOOP																
		4 Wire Unbundled Digital 19.2 Kbps		1	UDL	UDL19	27.59	157.81	106.06	78.91	18.66						
		4 Wire Unbundled Digital 19.2 Kbps		2	UDL	UDL19	32.48	157.81	106.06	78.91	18.66						
		4 Wire Unbundled Digital 19.2 Kbps		3	UDL	UDL19	36.37	157.81	106.06	78.91	18.66						
		4 Wire Unbundled Digital Loop 56 Kbps - Zone 1		1	UDL	UDL56	27.59	157.81	106.06	78.91	18.66						
		4 Wire Unbundled Digital Loop 56 Kbps - Zone 2		2	UDL	UDL56	32.48	157.81	106.06	78.91	18.66						
		4 Wire Unbundled Digital Loop 56 Kbps - Zone 3		3	UDL	UDL56	36.37	157.81	106.06	78.91	18.66						
		Order Coordination for Specified Conversion Time (per LSR)			UDL	OCOSL		23.01									
		4 Wire Unbundled Digital Loop 64 Kbps - Zone 1		1	UDL	UDL64	27.59	157.81	106.06	78.91	18.66						
		4 Wire Unbundled Digital Loop 64 Kbps - Zone 2		2	UDL	UDL64	32.48	157.81	106.06	78.91	18.66						
		4 Wire Unbundled Digital Loop 64 Kbps - Zone 3		3	UDL	UDL64	36.37	157.81	106.06	78.91	18.66						
		Order Coordination for Specified Conversion Time (per LSR)			UDL	OCOSL		23.01									
		CLEC to CLEC Conversion Charge without outside dispatch			UDL	UREWO		102.13	49.75								
	2-WIRE Unbundled COPPER LOOP																
		2-Wire Unbundled Copper Loop-Designed including manual service inquiry & facility reservation - Zone 1		1	UCL	UCLPB	10.82	140.95	78.70	69.09	11.54						
		2-Wire Unbundled Copper Loop-Designed including manual service inquiry & facility reservation - Zone 2		2	UCL	UCLPB	11.79	140.95	78.70	69.09	11.54						
		2 Wire Unbundled Copper Loop-Designed including manual service inquiry & facility reservation - Zone 3		3	UCL	UCLPB	12.87	140.95	78.70	69.09	11.54						
		Order Coordination for Unbundled Copper Loops (per loop)			UCL	UCLMC		9.00	9.00								
		2-Wire Unbundled Copper Loop-Designed without manual service inquiry and facility reservation - Zone 1		1	UCL	UCLPW	10.82	120.15	67.97	69.09	11.54						
		2-Wire Unbundled Copper Loop-Designed without manual service inquiry and facility reservation - Zone 2		2	UCL	UCLPW	11.79	120.15	67.97	69.09	11.54						
		2-Wire Unbundled Copper Loop-Designed without manual service inquiry and facility reservation - Zone 3		3	UCL	UCLPW	12.87	120.15	67.97	69.09	11.54						
		Order Coordination for Unbundled Copper Loops (per loop)			UCL	UCLMC		9.00	9.00								
		CLEC to CLEC Conversion Charge without outside dispatch (UCL-Des)			UCL	UREWO		97.23	42.48								
	4-WIRE COPPER LOOP																
		4-Wire Copper Loop-Designed including manual service inquiry and facility reservation - Zone 1		1	UCL	UCL4S	16.92	170.31	108.06	74.95	14.69						
		4-Wire Copper Loop-Designed including manual service inquiry and facility reservation - Zone 2		2	UCL	UCL4S	17.36	170.31	108.06	74.95	14.69						
		4-Wire Copper Loop-Designed including manual service inquiry and facility reservation - Zone 3		3	UCL	UCL4S	28.10	170.31	108.06	74.95	14.69						
		Order Coordination for Unbundled Copper Loops (per loop)			UCL	UCLMC		9.00	9.00								
		4-Wire Copper Loop-Designed without manual service inquiry and facility reservation - Zone 1		1	UCL	UCL4W	16.92	149.52	97.33	74.95	14.69						
		4-Wire Copper Loop-Designed without manual service inquiry and facility reservation - Zone 2		2	UCL	UCL4W	17.36	149.52	97.33	74.95	14.69						
		4-Wire Copper Loop-Designed without manual service inquiry and facility reservation - Zone 3		3	UCL	UCL4W	28.10	149.52	97.33	74.95	14.69						
		Order Coordination for Unbundled Copper Loops (per loop)			UCL	UCLMC		9.00	9.00								
		CLEC to CLEC Conversion Charge without outside dispatch (UCL-Des)			UCL	UREWO		97.23	42.48								
LOOP MODIFICATION																	
		Unbundled Loop Modification, Removal of Load Coils - 2 Wire pair less than or equal to 18k ft, per Unbundled Loop			UAL, UHL, UCL, UEQ, ULS, UEA, UEANL, UEPSR, UEPSB	ULM2L		9.24	9.24								
		Unbundled Loop Modification Removal of Load Coils - 4 Wire less than or equal to 18K ft, per Unbundled Loop			UHL, UCL, UEA	ULM4L		9.24	9.24								
		Unbundled Loop Modification Removal of Bridged Tap Removal, per unbundled loop			UAL, UHL, UCL, UEQ, ULS, UEA, UEANL, UEPSR, UEPSB	ULMBT		10.47	10.47								

UNBUNDLED NETWORK ELEMENTS - Kentucky														Attachment: 2		Exhibit: A	
CATEGORY		RATE ELEMENTS	Interim	Zone	BCS	USOC	RATES ($)					Svc Order Submitted Elec per LSR	Svc Order Submitted Manually per LSR	Incremental Charge - Manual Svc Order vs. Electronic-1st	Incremental Charge - Manual Svc Order vs. Electronic-Add'l	Incremental Charge - Manual Svc Order vs. Electronic-Disc 1st	Incremental Charge - Manual Svc Order vs. Electronic-Disc Add'l
							Rec	Nonrecurring		Nonrecurring Disconnect		OSS Rates ($)					
								First	Add'l	First	Add'l	SOMEC	SOMAN	SOMAN	SOMAN	SOMAN	SOMAN
SUB-LOOPS																	
	Sub-Loop Distribution																
		Sub-Loop - Per Cross Box Location - CLEC Feeder Facility Set-Up	I		UEANL	USBSA		207.91	207.91								
		Sub-Loop - Per Cross Box Location - Per 25 Pair Panel Set-Up	I		UEANL	USBSB		12.50	12.50								
		Sub-Loop - Per Building Equipment Room - CLEC Feeder Facility Set-Up	I		UEANL	USBSC		80.87	80.87								
		Sub-Loop - Per Building Equipment Room - Per 25 Pair Panel Set-Up	I		UEANL	USBSD		45.04	45.04								
		Sub-Loop Distribution Per 2-Wire Analog Voice Grade Loop - Zone 1	I	1	UEANL	USBN2	6.34	85.03	39.05	59.81	7.90						
		Sub-Loop Distribution Per 2-Wire Analog Voice Grade Loop - Zone 2	I	2	UEANL	USBN2	9.06	85.03	39.05	59.81	7.90						
		Sub-Loop Distribution Per 2-Wire Analog Voice Grade Loop - Zone 3	I	3	UEANL	USBN2	14.82	85.03	39.05	59.81	7.90						
		Order Coordination for Unbundled Sub-Loops, per sub-loop pair			UEANL	USBMC		9.00	9.00								
		Sub-Loop Distribution Per 4-Wire Analog Voice Grade Loop - Zone 1		1	UEANL	USBN4	8.14	102.31	56.32	65.24	10.88						
		Sub-Loop Distribution Per 4-Wire Analog Voice Grade Loop - Zone 2		2	UEANL	USBN4	8.63	102.31	56.32	65.24	10.88						
		Sub-Loop Distribution Per 4-Wire Analog Voice Grade Loop - Zone 3		3	UEANL	USBN4	25.60	102.31	56.32	65.24	10.88						
		Order Coordination for Unbundled Sub-Loops, per sub-loop pair			UEANL	USBMC		9.00	9.00								
		Sub-Loop 2-Wire Intrabuilding Network Cable (INC)	I		UEANL	USBR2	2.57	68.35	22.36	59.81	7.90						
		Order Coordination for Unbundled Sub-Loops, per sub-loop pair			UEANL	USBMC		9.00	9.00								
		Sub-Loop 4-Wire Intrabuilding Network Cable (INC)	I		UEANL	USBR4	4.98	76.49	30.51	65.24	10.88						
		Order Coordination for Unbundled Sub-Loops, per sub-loop pair			UEANL	USBMC		9.00	9.00								
		Loop Testing - Basic 1st Half Hour			UEANL	URET1		46.88	46.88								
		Loop Testing - Basic Additional Half Hour			UEANL	URETA		24.16	24.16								
		2 Wire Copper Unbundled Sub-Loop Distribution - Zone 1	I	1	UEF	UCS2X	5.45	85.03	39.05	59.81	7.90						
		2 Wire Copper Unbundled Sub-Loop Distribution - Zone 2	I	2	UEF	UCS2X	7.06	85.03	39.05	59.81	7.90						
		2 Wire Copper Unbundled Sub-Loop Distribution - Zone 3	I	3	UEF	UCS2X	9.67	85.03	39.05	59.81	7.90						
		Order Coordination for Unbundled Sub-Loops, per sub-loop pair			UEF	USBMC		9.00	9.00								
		4 Wire Copper Unbundled Sub-Loop Distribution - Zone 1	I	1	UEF	UCS4X	7.09	102.31	56.32	65.24	10.88						
		4 Wire Copper Unbundled Sub-Loop Distribution - Zone 2	I	2	UEF	UCS4X	8.66	102.31	56.32	65.24	10.88						
		4 Wire Copper Unbundled Sub-Loop Distribution - Zone 3	I	3	UEF	UCS4X	19.40	102.31	56.32	65.24	10.88						
		Order Coordination for Unbundled Sub-Loops, per sub-loop pair			UEF	USBMC		9.00	9.00								
		Loop Testing - Basic 1st Half Hour			UEF	URET1		46.88	46.88								
		Loop Testing - Basic Additional Half Hour			UEF	URETA		24.16	24.16								
	Unbundled Network Terminating Wire (UNTW)																
		Unbundled Network Terminating Wire (UNTW) per Pair			UENTW	UENPP	0.53	23.51	23.51								
	Network Interface Device (NID)																
		Network Interface Device (NID) - 1-2 lines			UENTW	UND12		73.53	49.47								
		Network Interface Device (NID) - 1-6 lines			UENTW	UND16		115.96	91.91								
		Network Interface Device Cross Connect - 2 W			UENTW	UNDC2		8.56	8.56								
		Network Interface Device Cross Connect - 4W			UENTW	UNDC4		8.56	8.56								
UNE OTHER, PROVISIONING ONLY - NO RATE																	
		NID - Dispatch and Service Order for NID installation			UENTW	UNDBX	0.00	0.00									
		UNTW Circuit Id Establishment, Provisioning Only - No Rate			UENTW	UENCE	0.00	0.00									
		Unbundled Contract Name, Provisioning Only - No Rate			UEANL,UEF,UEQ,UENTW	UNECN	0.00	0.00									
UNE OTHER, PROVISIONING ONLY - NO RATE																	

UNBUNDLED NETWORK ELEMENTS - Kentucky														Attachment: 2		Exhibit: A	
CATEGORY		RATE ELEMENTS	Interim	Zone	BCS	USOC	RATES ($)					Svc Order Submitted Elec per LSR	Svc Order Submitted Manually per LSR	Incremental Charge - Manual Svc Order vs. Electronic-1st	Incremental Charge - Manual Svc Order vs. Electronic-Add'l	Incremental Charge - Manual Svc Order vs. Electronic-Disc 1st	Incremental Charge - Manual Svc Order vs. Electronic-Disc Add'l
							Rec	Nonrecurring		Nonrecurring Disconnect		OSS Rates ($)					
								First	Add'l	First	Add'l	SOMEC	SOMAN	SOMAN	SOMAN	SOMAN	SOMAN
		Unbundled Contact Name, Provisioning Only - no rate			UAL,UCL,UDC,UDL, UDN,UEA,UHL,ULC	UNECN	0.00	0.00									
		Unbundled Sub-Loop Feeder-2 Wire Cross Box Jumper - no rate			UEA,UDN,UCL,UDC	USBFQ	0.00	0.00									
		Unbundled Sub-Loop Feeder-4 Wire Cross Box Jumper - no rate			UEA,USL,UCL,UDL	USBFR	0.00	0.00									
		Unbundled DS1 Loop - Superframe Format Option - no rate			USL	CCOSF	0.00	0.00									
		Unbundled DS1 Loop - Expanded Superframe Format option - no rate			USL	CCOEF	0.00	0.00									
HIGH CAPACITY UNBUNDLED LOCAL LOOP																	
		High Capacity Unbundled Local Loop - DS3 - Per Mile per month			UE3	1L5ND	9.25										
		High Capacity Unbundled Local Loop - DS3 - Facility Termination per month			UE3	UE3PX	308.31	551.38	338.08	173.00	120.42						
		High Capacity Unbundled Local Loop - STS-1 - Per Mile per month			UDLSX	1L5ND	9.25										
		High Capacity Unbundled Local Loop - STS-1 - Facility Termination per month			UDLSX	UDLS1	320.51	551.38	338.08	173.00	120.42						
LOOP MAKE-UP																	
		Loop Makeup - Preordering Without Reservation, per working or spare facility queried (Manual).			UMK	UMKLW		23.40	23.40								
		Loop Makeup - Preordering With Reservation, per spare facility queried (Manual).			UMK	UMKLP		24.85	24.85								
		Loop Makeup--With or Without Reservation, per working or spare facility queried (Mechanized)			UMK	UMKMQ		0.67	0.67								
LINE SHARING AND LINE SPLITTING																	
	NOTE 1: The Line Sharing monthly recurring rates for all installations completed from October 02, 2003 through midnight October 01, 2004 shall be billed as follows:																
	NOTE 1: 10/02/2003 – 10/01/2004: 25% of the rate for an unbundled copper loop non-designed ("UCLND")																
	NOTE 1: 10/02/2004 – 10/01/2005: 50% of the rate for UCLND																
	NOTE 1: 10/02/2005 – 10/01/2006: 75% of the rate for UCLND																
	NOTE 1: Above will apply to USOCS: ULSDT and ULSCT																
	****NOTE 2: The Line Sharing monthly recurring rates with USOCs ULSDC and ULSCC applies only to circuits installed and inservice on or before October 1, 2003**																
	LINE SHARING																
	SPLITTERS-CENTRAL OFFICE BASED																
		Line Sharing Splitter, per System 96 Line Capacity			ULS	ULSDA	198.83	379.05	0.00	358.55	0.00						
		Line Sharing Splitter, per System 24 Line Capacity			ULS	ULSDB	49.71	379.05	0.00	358.55	0.00						
		Line Sharing Splitter, Per System, 8 Line Capacity			ULS	ULSD8	16.94	377.71	0.00	357.29	0.00						
		Line Sharing-DLEC Owned Splitter in CO-CFA activaton-deactivation (per LSOD)			ULS	ULSDG		173.62	0.00	100.40	0.00						
	END USER ORDERING-CENTRAL OFFICE BASED LINE SHARING																
		Line Sharing - per Line Activation (BST Owned splitter) - OBSOLETE see **NOTE 2			ULS	ULSDC	0.61	37.16	21.28	20.17	9.90						
		Line Share Service, TRO per line activation, BST owned splitter - Central Office Located (25% of UCLND) - please see NOTE 1 (E:10/2/2003)			ULS	ULSDT	2.65	37.16	21.28	20.17	9.90						
		Line Share Service, TRO per line activation, BST owned splitter - Central Office Located (50% of UCLND) - please see NOTE 1 (E:10/2/2004)			ULS	ULSDT	5.29	37.16	21.28	20.17	9.90						
		Line Share Service, TRO per line activation, BST owned splitter - Central Office Located (75% of UCLND) - please see NOTE 1 (E:10/2/2005)			ULS	ULSDT	7.94	37.16	21.28	20.17	9.90						
		Line Sharing - per Subsequent Activity per Line Rearrangement(BST Owned Splitter)			ULS	ULSDS		32.90	16.43								
		Line Sharing - per Subsequent Activity per Line Rearrangement(DLEC Owned Splitter)			ULS	ULSCS		32.90	16.43								
		Line Sharing - per Line Activation (DLEC owned Splitter) - OBSOLETE see **NOTE 2			ULS	ULSCC	0.61	47.44	19.31	20.67	12.74						

UNBUNDLED NETWORK ELEMENTS - Kentucky														Attachment: 2		Exhibit: A	
CATEGORY		RATE ELEMENTS	Interim	Zone	BCS	USOC	RATES ($)					Svc Order Submitted Elec per LSR	Svc Order Submitted Manually per LSR	Incremental Charge - Manual Svc Order vs. Electronic-1st	Incremental Charge - Manual Svc Order vs. Electronic-Add'l	Incremental Charge - Manual Svc Order vs. Electronic-Disc 1st	Incremental Charge - Manual Svc Order vs. Electronic-Disc Add'l
							Rec	Nonrecurring		Nonrecurring Disconnect		OSS Rates ($)					
								First	Add'l	First	Add'l	SOMEC	SOMAN	SOMAN	SOMAN	SOMAN	SOMAN
		Line Share Service, TRO per line activation, CLEC owned splitter - Central Office Located (25% of UCLND) - please see NOTE 1 (E:10/2/2003)			ULS	ULSCT	2.65	47.44	19.31	20.67	12.74						
		Line Share Service, TRO per line activation, CLEC owned splitter - Central Office Located (50% of UCLND) - please see NOTE 1 (E:10/2/2004)			ULS	ULSCT	5.29	47.44	19.31	20.67	12.74						
		Line Share Service, TRO per line activation, CLEC owned splitter - Central Office Located (75% of UCLND) - please see NOTE 1 (E:10/2/2005)			ULS	ULSCT	7.94	47.44	19.31	20.67	12.74						
	LINE SPLITTING																
	END USER ORDERING-CENTRAL OFFICE BASED																
		Line Splitting - per line activation DLEC owned splitter			UEPSR UEPSB	UREOS	0.61										
		Line Splitting - per line activation BST owned - physical			UEPSR UEPSB	UREBP	0.61	37.02	21.20	21.10	9.87						
		Line Splitting - per line activation BST owned - virtual			UEPSR UEPSB	UREBV	0.61	37.02	21.20	21.10	9.87						
	MAINTENANCE																
		No Trouble Found - per 1/2 hour increments - Basic						80.00	55.00								
		No Trouble Found - per 1/2 hour increments - Overtime						120.00	82.50								
		No Trouble Found - per 1/2 hour increments - Premium						160.00	110.00								
UNBUNDLED DEDICATED TRANSPORT																	
	INTEROFFICE CHANNEL - DEDICATED TRANSPORT																
		Interoffice Channel - Dedicated Transport - 2-Wire Voice Grade - Per Mile per month			U1TVX	1L5XX	0.01										
		Interoffice Channel - Dedicated Transport- 2- Wire Voice Grade - Facility Termination			U1TVX	U1TV2	29.11	47.34	31.78	22.77	8.75						
		Interoffice Channel - Dedicated Transpor t- 2-Wire Voice Grade Rev Bat. - Per Mile per month			U1TVX	1L5XX	0.01										
		Interoffice Channel - Dedicated Transport- 2- Wire VG Rev Bat. - Facility Termination			U1TVX	U1TR2	29.11	47.34	31.78	22.77	8.75						
		Interoffice Channel - Dedicated Transport - 4-Wire Voice Grade - Per Mile per month			U1TVX	1L5XX	0.01										
		Interoffice Channel - Dedicated Transport - 4- Wire Voice Grade - Facility Termination			U1TVX	U1TV4	25.86	47.34	31.78	22.77	8.75						
		Interoffice Channel - Dedicated Transport - 56 kbps - per mile per month			U1TDX	1L5XX	0.0115										
		Interoffice Channel - Dedicated Transport - 56 kbps - Facility Termination			U1TDX	U1TD5	20.97	47.35	31.78	22.77	8.75						
		Interoffice Channel - Dedicated Transport - 64 kbps - per mile per month			U1TDX	1L5XX	0.0115										
		Interoffice Channel - Dedicated Transport - 64 kbps - Facility Termination			U1TDX	U1TD6	20.97	47.35	31.78	22.77	8.75						
		Interoffice Channel - Dedicated Channel - DS1 - Per Mile per month			U1TD1	1L5XX	0.23										
		Interoffice Channel - Dedicated Tranport - DS1 - Facility Termination			U1TD1	U1TF1	96.04	105.52	98.46	23.09	20.49						
		Interoffice Channel - Dedicated Transport - DS3 - Per Mile per month			U1TD3	1L5XX	4.97										
		Interoffice Channel - Dedicated Transport - DS3 - Facility Termination per month			U1TD3	U1TF3	1,175.15	335.40	219.24	89.57	87.75						
		Interoffice Channel - Dedicated Transport - STS-1 - Per Mile per month			U1TS1	1L5XX	4.97										
		Interoffice Channel - Dedicated Transport - STS-1 - Facility Termination			U1TS1	U1TFS	1,149.51	335.40	219.24	89.57	87.75						
DARK FIBER																	
		Dark Fiber, Four Fiber Strands, Per Route Mile or Fraction Thereof per month - Interoffice Channel			UDF, UDFCX	1L5DF	30.74										
		NRC Dark Fiber - Interoffice Channel			UDF, UDFCX	UDF14		732.53	192.67	377.27	241.67						
		Dark Fiber, Four Fiber Strands, Per Route Mile or Fraction Thereof per month - Local Loop			UDF, UDFCX	1L5DL	47.01										
		NRC Dark Fiber - Local Loop			UDF, UDFCX	UDFL4		732.53	192.67	377.27	241.67						

UNBUNDLED NETWORK ELEMENTS - Kentucky														Attachment: 2		Exhibit: A	
CATEGORY		RATE ELEMENTS	Interim	Zone	BCS	USOC	RATES ($)					Svc Order Submitted Elec per LSR	Svc Order Submitted Manually per LSR	Incremental Charge - Manual Svc Order vs. Electronic-1st	Incremental Charge - Manual Svc Order vs. Electronic-Add'l	Incremental Charge - Manual Svc Order vs. Electronic-Disc 1st	Incremental Charge - Manual Svc Order vs. Electronic-Disc Add'l
							Rec	Nonrecurring		Nonrecurring Disconnect		OSS Rates ($)					
								First	Add'l	First	Add'l	SOMEC	SOMAN	SOMAN	SOMAN	SOMAN	SOMAN
8XX ACCESS TEN DIGIT SCREENING																	
		8XX Access Ten Digit Screening, Per Call			OHD		0.0006478										
		8XX Access Ten Digit Screening, Reservation Charge Per 8XX Number Reserved			OHD	N8R1X		4.14	0.70								
		8XX Access Ten Digit Screening, Per 8XX No. Established W/O POTS Translations			OHD			8.78	1.18	7.08	0.86						
		8XX Access Ten Digit Screening, Per 8XX No. Established With POTS Translations			OHD	N8FTX		8.78	1.18	7.08	0.86						
		8XX Access Ten Digit Screening, Customized Area of Service Per 8XX Number			OHD	N8FCX		4.14	2.07								
		8XX Access Ten Digit Screening, Multiple InterLATA CXR Routing Per CXR Requested Per 8XX No.			OHD	N8FMX		4.85	2.78								
		8XX Access Ten Digit Screening, Change Charge Per Request			OHD	N8FAX		4.85	0.70								
		8XX Access Ten Digit Screening, Call Handling and Destination Features			OHD	N8FDX		4.14	4.14								
		8XX Access Ten Digit Screening w/ 8FL No. Delivery,			OHD		0.0006478										
		8XX Access Ten Digit Screening, w/ POTS No. Delivery,			OHD		0.0006478										
LINE INFORMATION DATA BASE ACCESS (LIDB)																	
		LIDB Common Transport Per Query			OQT		0.000023										
		LIDB Validation Per Query			OQU		0.0137322										
		LIDB Originating Point Code Establishment or Change			OQT, OQU	NRBPX		55.12		67.59							
SIGNALING (CCS7)																	
		CCS7 Signaling Connection, Per 56 Kbps Facility			UDB	TPP++	20.71	43.56	43.56	22.45	22.45						
		CCS7 Signaling Termination, Per STP Port			UDB	PT8SX	151.39										
		CCS7 Signaling Usage, Per TCAP Message			UDB		0.0000656										
		CCS7 Signaling Connection, Per link (A link)			UDB	TPP++	20.71	43.56	43.56	22.45	22.45						
		CCS7 Signaling Connection, Per link (B link) (also known as D link)			UDB	TPP++	20.71	43.56	43.56	22.45	22.45						
		CCS7 Signaling Usage, Per ISUP Message			UDB		0.0000164										
		CCS7 Signaling Usage Surrogate, per link per LATA			UDB	STU56	751.08										
		CCS7 Signaling Point Code, per Originating Point Code Establishment or Change, per STP affected			UDB	CCAPO		46.02	46.02	56.43	56.43						
		CCS7 Signaling Point Code, per Destination Point Code Establishment or Change, Per Stp Affected			UDB	CCAPD		46.02	46.02	56.43	56.43						
E911 SERVICE																	
		Local Channel - Dedicated - 2-wr Voice Grade					18.57	265.78	46.96	46.79	4.98						
		Interoffice Transport - Dedicated - 2-wr Voice Grade Per Mile					0.0115										
		Interoffice Transport - Dedicated - 2-wr Voice Grade Per Facility Termination					29.11	47.34	31.78	22.77	8.75						
		Local Channel - Dedicated - DS1 - Zone 1					40.46	209.60	176.51	30.21	21.07						
		Local Channel - Dedicated - DS1 - Zone 2					43.39	209.60	176.51	30.21	21.07						
		Local Channel - Dedicated - DS1 - Zone 3					164.50	209.60	176.51	30.21	21.07						
		Interoffice Transport - Dedicated - DS1 Per Mile					0.23										
		Interoffice Transport - Dedicated - DS1 Per Facility Termination					96.04	105.52	98.46	23.09	20.49						
CALLING NAME (CNAM) SERVICE																	
		CNAM For DB Owners - Service Establishment			OQV			25.34	25.34	23.30	23.30						
		CNAM For Non DB Owners - Service Establishment			OQV			25.34	25.34	23.30	23.30						
		CNAM For DB Owners - Service Provisioning With Point Code Establishment			OQV			1,591.54	1,177.08	431.95	317.61						
		CNAM For Non DB Owners - Service Provisioning With Point Code Establishment			OQV			546.40	393.74	438.93	317.61						
		CNAM for DB Owners, Per Query			OQV		0.0010348										
		CNAM for Non DB Owners, Per Query			OQV		0.0010348										
		CNAM (Non-Databs Owner), NRC, applies when using the Character Based User Interface (CHUI)			OQV	CDDCH		595.00	595.00								
SELECTIVE ROUTING																	
		Selective Routing Per Unique Line Class Code Per Request Per Switch						93.53	93.53	15.58	15.58						

UNBUNDLED NETWORK ELEMENTS - Kentucky														Attachment: 2		Exhibit: A	
CATEGORY		RATE ELEMENTS	Interim	Zone	BCS	USOC	RATES ($)					Svc Order Submitted Elec per LSR	Svc Order Submitted Manually per LSR	Incremental Charge - Manual Svc Order vs. Electronic-1st	Incremental Charge - Manual Svc Order vs. Electronic-Add'l	Incremental Charge - Manual Svc Order vs. Electronic-Disc 1st	Incremental Charge - Manual Svc Order vs. Electronic-Disc Add'l
							Rec	Nonrecurring		Nonrecurring Disconnect		OSS Rates ($)					
								First	Add'l	First	Add'l	SOMEC	SOMAN	SOMAN	SOMAN	SOMAN	SOMAN
VIRTUAL COLLOCATION																	
		Virtual Collocation-2 Wire Cross Connects (Loop) for Line Splitting			UEPSR UEPSB	VE1LS	0.0309	24.68	23.68	12.14	10.95						
PHYSICAL COLLOCATION																	
		Physical Collocation-2 Wire Cross Connects (Loop) for Line Splitting			UEPSR UEPSB	PE1LS	0.0333	24.68	23.68	12.14	10.95						
AIN SELECTIVE CARRIER ROUTING																	
		Regional Service Establishment			SRC	SRCEC		193,401.00	193,401.00	9,483.34	9,483.34						
		End Office Establishment			SRC	SRCEO		194.09	194.09	0.85	0.85						
		Line/Port NRC, per end user			SRC	SRCLP		2.06	2.06								
		Query NRC, per query			SRC		0.0037502										
AIN - BELLSOUTH AIN SMS ACCESS SERVICE																	
		AIN SMS Access Service - Service Establishment, Per State, Initial Setup			A1N	CAMSE		43.55	43.55	44.93	44.93						
		AIN SMS Access Service - Port Connection - Dial/Shared Access			A1N	CAMDP		8.64	8.64	10.03	10.03						
		AIN SMS Access Service - Port Connection - ISDN Access			A1N	CAM1P		8.64	8.64	10.03	10.03						
		AIN SMS Access Service - User Identification Codes - Per User ID Code			A1N	CAMAU		38.65	38.65	29.88	29.88						
		AIN SMS Access Service - Security Card, Per User ID Code, Initial or Replacement			A1N	CAMRC		75.08	75.08	12.93	12.93						
		AIN SMS Access Service - Storage, Per Unit (100 Kilobytes)					0.0025										
		AIN SMS Access Service - Session, Per Minute					0.666										
		AIN SMS Access Service - Company Performed Session, Per Minute					0.4608										
AIN - BELLSOUTH AIN TOOLKIT SERVICE																	
		AIN Toolkit Service - Service Establishment Charge, Per State, Initial Setup			CAM	BAPSC		43.55	43.55	44.93	44.93						
		AIN Toolkit Service - Training Session, Per Customer				BAPVX		8,436.93	8,436.93								
		AIN Toolkit Service - Trigger Access Charge, Per Trigger, Per DN, Term. Attempt				BAPTT		8.64	8.64	10.03	10.03						
		AIN Toolkit Service - Trigger Access Charge, Per Trigger, Per DN, Off-Hook Delay				BAPTD		8.64	8.64	10.03	10.03						
		AIN Toolkit Service - Trigger Access Charge, Per Trigger, Per DN, Off-Hook Immediate				BAPTM		8.64	8.64	10.03	10.03						
		AIN Toolkit Service - Trigger Access Charge, Per Trigger, Per DN, 10-Digit PODP				BAPTO		51.01	51.01	18.50	18.50						
		AIN Toolkit Service - Trigger Access Charge, Per Trigger, Per DN, CDP				BAPTC		51.01	51.01	18.50	18.50						
		AIN Toolkit Service - Trigger Access Charge, Per Trigger, Per DN, Feature Code				BAPTF		51.01	51.01	18.50	18.50						
		AIN Toolkit Service - Query Charge, Per Query					0.0549207										
		AIN Toolkit Service - Type 1 Node Charge, Per AIN Toolkit Subscription, Per Node, Per Query					0.0066492										
		AIN Toolkit Service - SCP Storage Charge, Per SMS Access Account, Per 100 Kilobytes					0.07										
		AIN Toolkit Service - Monthly report - Per AIN Toolkit Service Subscription			CAM	BAPMS	7.87	8.64	8.64	6.08	6.08						
		AIN Toolkit Service - Special Study - Per AIN Toolkit Service Subscription			CAM	BAPLS	3.26	9.56	9.56								
		AIN Toolkit Service - Call Event Report - Per AIN Toolkit Service Subscription			CAM	BAPDS	4.72	8.64	8.64	6.08	6.08						
		AIN Toolkit Service - Call Event Special Study - Per AIN Toolkit Service Subscription			CAM	BAPES	0.11	9.56	9.56								
ENHANCED EXTENDED LINK (EELs)																	
	NOTE: The monthly recurring and non-recurring charges below will apply and the Switch-As-Is Charge will not apply for UNE combinations provisioned as ' Ordinarily Combined' Network Elements.																
	NOTE: The monthly recurring and the Switch-As-Is Charge and not the non-recurring charges below will apply for UNE combinations provisioned as ' Currently Combined' Network Elements.																
	EXTENTED 2-WIRE VOICE GRADE EXTENDED LOOP WITH DEDICATED DS1 INTEROFFICE TRANSPORT																
		First 2-Wire VG Loop (SL2) in Combination - Zone 1		1	UNCVX	UEAL2	12.67	125.22	60.48	59.69	7.84						

UNBUNDLED NETWORK ELEMENTS - Kentucky														Attachment: 2		Exhibit: A	
CATEGORY		RATE ELEMENTS	Interim	Zone	BCS	USOC	RATES ($)					Svc Order Submitted Elec per LSR	Svc Order Submitted Manually per LSR	Incremental Charge - Manual Svc Order vs. Electronic-1st	Incremental Charge - Manual Svc Order vs. Electronic-Add'l	Incremental Charge - Manual Svc Order vs. Electronic-Disc 1st	Incremental Charge - Manual Svc Order vs. Electronic-Disc Add'l
							Rec	Nonrecurring		Nonrecurring Disconnect		OSS Rates ($)					
								First	Add'l	First	Add'l	SOMEC	SOMAN	SOMAN	SOMAN	SOMAN	SOMAN
		First 2-Wire VG Loop (SL2) in Combination - Zone 2		2	UNCVX	UEAL2	17.45	125.22	60.48	59.69	7.84						
		First 2-Wire VG Loop (SL2) in Combination - Zone 3		3	UNCVX	UEAL2	33.22	125.22	60.48	59.69	7.84						
		Interoffice Transport - Dedicated - DS1 combination - Per Mile per month			UNC1X	1L5XX	0.19										
		Interoffice Transport - Dedicated - DS1 combination - Facility Termination per month			UNC1X	U1TF1	79.02	181.24	123.53	56.72	22.32						
		1/0 Channelization System in combination Per Month			UNC1X	MQ1	113.33	57.26	14.74	1.86	1.67						
		Voice Grade COCI - Per Month			UNCVX	1D1VG	0.62	6.71	4.84								
		Each Additional 2-Wire VG Loop (SL 2) in Combination - Zone 1		1	UNCVX	UEAL2	12.67	125.22	60.48	59.69	7.84						
		Each Additional 2-Wire VG Loop (SL 2) in Combination - Zone 2		2	UNCVX	UEAL2	17.45	125.22	60.48	59.69	7.84						
		Each Additional 2-Wire VG Loop (SL 2) in Combination - Zone 3		3	UNCVX	UEAL2	33.22	125.22	60.48	59.69	7.84						
		Voice Grade COCI - Per Month			UNCVX	1D1VG	0.62	6.71	4.84								
		Nonrecurring Currently Combined Network Elements Switch -As-Is Charge			UNC1X	UNCCC		8.98	8.98	11.17	11.17						
	EXTENDED 4-WIRE VOICE GRADE EXTENDED LOOP WITH DEDICATED DS1 INTEROFFICE TRANSPORT																
		First 4-Wire Analog Voice Grade Loop in Combination - Zone 1		1	UNCVX	UEAL4	29.26	125.22	60.48	59.69	7.84						
		First 4-Wire Analog Voice Grade Loop in Combination - Zone 2		2	UNCVX	UEAL4	34.25	125.22	60.48	59.69	7.84						
		First 4-Wire Analog Voice Grade Loop in Combination - Zone 3		3	UNCVX	UEAL4	85.06	125.22	60.48	59.69	7.84						
		Interoffice Transport - Dedicated - DS1 combination - Per Mile Per Month			UNC1X	1L5XX	0.19										
		Interoffice Transport - Dedicated - DS1 - Facility Termination Per Month			UNC1X	U1TF1	79.02	181.24	123.53	56.72	22.32						
		1/0 Channel System in combination Per Month			UNC1X	MQ1	113.33	57.26	14.74	1.86	1.67						
		Voice Grade COCI in combination - per month			UNCVX	1D1VG	0.62	6.71	4.84								
		Additional 4-Wire Analog Voice Grade Loop in same DS1 Interoffice Transport Combination - Zone 1		1	UNCVX	UEAL4	29.26	125.22	60.48	59.69	7.84						
		Additional 4-Wire Analog Voice Grade Loop in same DS1 Interoffice Transport Combination - Zone 2		2	UNCVX	UEAL4	34.25	125.22	60.48	59.69	7.84						
		Additional 4-Wire Analog Voice Grade Loop in same DS1 Interoffice Transport Combination - Zone 3		3	UNCVX	UEAL4	85.06	125.22	60.48	59.69	7.84						
		Additional Voice Grade COCI in combination - per month			UNCVX	1D1VG	0.62	6.71	4.84								
		Nonrecurring Currently Combined Network Elements Switch -As-Is Charge			UNC1X	UNCCC		8.98	8.98	11.17	11.17						
	EXTENDED 4-WIRE 56 KBPS EXTENDED DIGITAL LOOP WITH DEDICATED DS1 INTEROFFICE TRANSPORT																
		First 4-Wire 56Kbps Digital Grade Loop in Combination - Zone 1		1	UNCDX	UDL56	27.59	125.22	60.48	59.69	7.84						
		First 4-Wire 56Kbps Digital Grade Loop in Combination - Zone 2		2	UNCDX	UDL56	32.48	125.22	60.48	59.69	7.84						
		First 4-Wire 56Kbps Digital Grade Loop in Combination - Zone 3		3	UNCDX	UDL56	36.37	125.22	60.48	59.69	7.84						
		Interoffice Transport - Dedicated - DS1 combination - Per Mile Per Month			UNC1X	1L5XX	0.19										
		Interoffice Transport - Dedicated - DS1 - combination Facility Termination Per Month			UNC1X	U1TF1	79.02	181.24	123.53	56.72	22.32						
		1/0 Channel System in combination Per Month			UNC1X	MQ1	113.33	57.26	14.74	1.86	1.67						
		OCU-DP COCI (data) per month (2.4-64kbs)			UNCDX	1D1DD	1.32	6.71	4.84								
		Additional 4-Wire 56Kbps Digital Grade Loop in same DS1 Interoffice Transport Combination - Zone 1		1	UNCDX	UDL56	27.59	125.22	60.48	59.69	7.84						
		Additional 4-Wire 56Kbps Digital Grade Loop in same DS1 Interoffice Transport Combination - Zone 2		2	UNCDX	UDL56	32.48	125.22	60.48	59.69	7.84						
		Additional 4-Wire 56Kbps Digital Grade Loop in same DS1 Interoffice Transport Combination - Zone 3		3	UNCDX	UDL56	36.37	125.22	60.48	59.69	7.84						

CATEGORY	RATE ELEMENTS	Interim	Zone	BCS	USOC	RATES ($)					Svc Order Submitted Elec per LSR	Svc Order Submitted Manually per LSR	Attachment: 2 Incremental Charge - Manual Svc Order vs. Electronic-1st	Attachment: 2 Incremental Charge - Manual Svc Order vs. Electronic-Add'l	Exhibit: A Incremental Charge - Manual Svc Order vs. Electronic-Disc 1st	Exhibit: A Incremental Charge - Manual Svc Order vs. Electronic-Disc Add'l
						Rec	Nonrecurring		Nonrecurring Disconnect		OSS Rates ($)					
							First	Add'l	First	Add'l	SOMEC	SOMAN	SOMAN	SOMAN	SOMAN	SOMAN
	Additional OCU-DP COCI (data) - in combination per month (2.4-64kbs)			UNCDX	1D1DD	1.32	6.71	4.84								
	Nonrecurring Currently Combined Network Elements Switch -As-Is Charge			UNC1X	UNCCC		8.98	8.98	11.17	11.17						
	EXTENDED 4-WIRE 64 KBPS EXTENDED DIGITAL LOOP WITH DEDICATED DS1 INTEROFFICE TRANSPORT															
	First 4-Wire 64Kbps Digital Grade Loop in Combination - Zone 1		1	UNCDX	UDL64	27.59	125.22	60.48	59.69	7.84						
	First 4-Wire 64Kbps Digital Grade Loop in Combination - Zone 2		2	UNCDX	UDL64	32.48	125.22	60.48	59.69	7.84						
	First 4-Wire 64Kbps Digital Grade Loop in Combination - Zone 3		3	UNCDX	UDL64	36.37	125.22	60.48	59.69	7.84						
	Interoffice Transport - Dedicated - DS1 combination - Per Mile Per Month			UNC1X	1L5XX	0.19										
	interoffice Transport - Dedicated - DS1 combination - Facility Termination Per Month			UNC1X	U1TF1	79.02	181.24	123.53	56.72	22.32						
	1/0 Channel System in combination Per Month			UNC1X	MQ1	113.33	57.26	14.74	1.86	1.67						
	OCU-DP COCI (data) - in combination - per month (2.4-64kbs)			UNCDX	1D1DD	1.32	6.71	4.84								
	Additional 4-Wire 64Kbps Digital Grade Loop in same DS1 Interoffice Transport Combination - Zone 1		1	UNCDX	UDL64	27.59	125.22	60.48	59.69	7.84						
	Additional 4-Wire 64Kbps Digital Grade Loop in same DS1 Interoffice Transport Combination - Zone 2		2	UNCDX	UDL64	32.48	125.22	60.48	59.69	7.84						
	Additional 4-Wire 64Kbps Digital Grade Loop in same DS1 Interoffice Transport Combination - Zone 3		3	UNCDX	UDL64	36.37	125.22	60.48	59.69	7.84						
	Additional OCU-DP COCI (data) - in combination - per month (2.4-64kbs)			UNCDX	1D1DD	1.32	6.71	4.84								
	Nonrecurring Currently Combined Network Elements Switch -As-Is Charge			UNC1X	UNCCC		8.98	8.98	11.17	11.17						
	EXTENDED 4-WIRE DS1 DIGITAL EXTENDED LOOP WITH DEDICATED DS1 INTEROFFICE TRANSPORT															
	4-Wire DS1 Digital Loop in Combination - Zone 1		1	UNC1X	USLXX	86.47	210.70	114.60	63.96	17.97						
	4-Wire DS1 Digital Loop in Combination - Zone 2		2	UNC1X	USLXX	114.10	210.70	114.60	63.96	17.97						
	4-Wire DS1 Digital Loop in Combination - Zone 3		3	UNC1X	USLXX	297.76	210.70	114.60	63.96	17.97						
	Interoffice Transport - Dedicated - DS1 combination - Per Mile Per Month			UNC1X	1L5XX	0.19										
	Interoffice Transport - Dedicated - DS1 combination - Facility Termination Per Month			UNC1X	U1TF1	79.02	181.24	123.53	56.72	22.32						
	Nonrecurring Currently Combined Network Elements Switch -As-Is Charge			UNC1X	UNCCC		8.98	8.98	11.17	11.17						
	EXTENDED 4-WIRE DS1 DIGITAL EXTENDED LOOP WITH DEDICATED DS3 INTEROFFICE TRANSPORT															
	First DS1Loop in Combination - Zone 1		1	UNC1X	USLXX	86.47	210.70	114.60	63.96	17.97						
	First DS1Loop in Combination - Zone 2		2	UNC1X	USLXX	114.10	210.70	114.60	63.96	17.97						
	First DS1Loop in Combination - Zone 3		3	UNC1X	USLXX	297.76	210.70	114.60	63.96	17.97						
	Interoffice Transport - Dedicated - DS3 combination - Per Mile Per Month			UNC3X	1L5XX	4.09										
	Interoffice Transport - Dedicated - DS3 - Facility Termination per month			UNC3X	U1TF3	966.89	350.56	141.58	48.00	23.39						
	3/1Channel System in combination per month			UNC3X	MQ3	158.20	115.48	56.53	15.12	5.30						
	DS1 COCI in combination per month			UNC1X	UC1D1	11.80	6.71	4.84								
	Additional DS1Loop in DS3 Interoffice Transport Combination - Zone 1		1	UNC1X	USLXX	86.47	210.70	114.60	63.96	17.97						
	Additional DS1Loop in DS3 Interoffice Transport Combination - Zone 2		2	UNC1X	USLXX	114.10	210.70	114.60	63.96	17.97						
	Additional DS1Loop in DS3 Interoffice Transport Combination - Zone 3		3	UNC1X	USLXX	297.76	210.70	114.60	63.96	17.97						
	Additoinal DS1 COCI in combination per month			UNC1X	UC1D1	11.80	6.71	4.84								
	Nonrecurring Currently Combined Network Elements Switch -As-Is Charge			UNC3X	UNCCC		8.98	8.98	11.17	11.17						
	EXTENDED 2-WIRE VOICE GRADE EXTENDED LOOP/ 2 WIRE VOICE GRADE INTEROFFICE TRANSPORT															
	2-WireVG Loop in combination - Zone 1		1	UNCVX	UEAL2	12.67	125.22	60.48	59.69	7.84						
	2-WireVG Loop in combination - Zone 2		2	UNCVX	UEAL2	17.45	125.22	60.48	59.69	7.84						

UNBUNDLED NETWORK ELEMENTS - Kentucky														Attachment: 2		Exhibit: A	
CATEGORY		RATE ELEMENTS	Interim	Zone	BCS	USOC	RATES ($)					Svc Order Submitted Elec per LSR	Svc Order Submitted Manually per LSR	Incremental Charge - Manual Svc Order vs. Electronic-1st	Incremental Charge - Manual Svc Order vs. Electronic-Add'l	Incremental Charge - Manual Svc Order vs. Electronic-Disc 1st	Incremental Charge - Manual Svc Order vs. Electronic-Disc Add'l
							Rec	Nonrecurring		Nonrecurring Disconnect		OSS Rates ($)					
								First	Add'l	First	Add'l	SOMEC	SOMAN	SOMAN	SOMAN	SOMAN	SOMAN
		2-WireVG Loop in combination - Zone 3		3	UNCVX	UEAL2	33.22	125.22	60.48	59.69	7.84						
		Interoffice Transport - 2-wire VG - Dedicated- Per Mile Per Month			UNCVX	1L5XX	0.01										
		Interoffice Transport - 2-wire VG - Dedicated - Facility Termination per month			UNCVX	U1TV2	23.95	98.09	53.67	56.31	22.42						
		Nonrecurring Currently Combined Network Elements Switch -As-Is Charge			UNCVX	UNCCC		8.98	8.98	11.17	11.17						
	EXTENDED 4-WIRE VOICE GRADE EXTENDED LOOP/ 4 WIRE VOICE GRADE INTEROFFICE TRANSPORT																
		4-WireVG Loop in combination - Zone 1		1	UNCVX	UEAL4	29.26	125.22	60.48	59.69	7.84						
		4-WireVG Loop in combination - Zone 2		2	UNCVX	UEAL4	34.25	125.22	60.48	59.69	7.84						
		4-WireVG Loop in combination - Zone 3		3	UNCVX	UEAL4	85.06	125.22	60.48	59.69	7.84						
		Interoffice Transport - 4-wire VG - Dedicated - Per Mile Per Month			UNCVX	1L5XX	0.01										
		Interoffice Transport - 4-wire VG - Dedicated - Facility Termination per month			UNCVX	U1TV4	21.28	98.09	53.67	56.31	22.42						
		Nonrecurring Currently Combined Network Elements Switch -As-Is Charge			UNCVX	UNCCC		8.98	8.98	11.17	11.17						
	EXTENDED DS3 DIGITAL EXTENDED LOOP WITH DEDICATED DS3 INTEROFFICE TRANSPORT																
		DS3 Local Loop in combination - per mile per month			UNC3X	1L5ND	9.25										
		DS3 Local Loop in combination - Facility Termination per month			UNC3X	UE3PX	308.31	237.36	147.69	83.43	32.67						
		Interoffice Transport - Dedicated - DS3 - Per Mile per month			UNC3X	1L5XX	4.09										
		Interoffice Transport - Dedicated - DS3 combination - Facility Termination per month			UNC3X	U1TF3	966.89	350.56	141.58	48.00	23.39						
		Nonrecurring Currently Combined Network Elements Switch -As-Is Charge			UNC3X	UNCCC		8.98	8.98	11.17	11.17						
	EXTENDED STS-1 DIGITAL EXTENDED LOOP WITH DEDICATED STS-1 INTEROFFICE TRANSPORT																
		STS-1 Local Lolp in combination - per mile per month			UNCSX	1L5ND	9.25										
		STS-1 Local Loop in combination - Facility Termination per month			UNCSX	UDLS1	320.51	237.36	147.69	83.43	32.67						
		Interoffice Transport - Dedicated - STS-1 combination - per mile per month			UNCSX	1L5XX	4.09										
		Interoffice Transport - Dedicated - STS-1 combination - Facility Termination per month			UNCSX	U1TFS	945.79	350.56	141.58	48.00	23.39						
		Nonrecurring Currently Combined Network Elements Switch -As-Is Charge			UNCSX	UNCCC		8.98	8.98	11.17	11.17						
	EXTENDED 2-WIRE ISDN EXTENDED LOOP WITH DS1 INTEROFFICE TRANSPORT																
		First 2-Wire ISDN Loop in Combination - Zone 1		1	UNCNX	U1L2X	18.44	125.22	60.48	59.69	7.84						
		First 2-Wire ISDN Loop in Combination - Zone 2		2	UNCNX	U1L2X	25.08	125.22	60.48	59.69	7.84						
		First 2-Wire ISDN Loop in Combination - Zone 3		3	UNCNX	U1L2X	42.87	125.22	60.48	59.69	7.84						
		Interoffice Transport - Dedicated - DS1 combination - per mile per month			UNC1X	1L5XX	0.19										
		Interoffice Transport - Dedicated - DS1 combination - Facility Termination per month			UNC1X	U1TF1	79.02	181.24	123.53	56.72	22.32						
		1/0 Channel System in combination - per month			UNC1X	MQ1	113.33	57.26	14.74	1.86	1.67						
		2-wire ISDN COCI (BRITE) - in combination - per month			UNCNX	UC1CA	2.84	6.71	4.84								
		Additional 2-wire ISDN Loop in same DS1Interoffice Transport Combination - Zone 1		1	UNCNX	U1L2X	18.44	125.22	60.48	59.69	7.84						
		Additional 2-wire ISDN Loop in same DS1Interoffice Transport Combination - Zone 2		2	UNCNX	U1L2X	25.08	125.22	60.48	59.69	7.84						
		Additional 2-wire ISDN Loop in same DS1Interoffice Transport Combination - Zone 3		3	UNCNX	U1L2X	42.87	125.22	60.48	59.69	7.84						
		Additional 2-wire ISDN COCI (BRITE) - in combination- per month			UNCNX	UC1CA	2.84	6.71	4.84								
		Nonrecurring Currently Combined Network Elements Switch -As-Is Charge			UNC1X	UNCCC		8.98	8.98	11.17	11.17						
	EXTENDED 4-WIRE DS1 DIGITAL EXTENDED LOOP WITH DEDICATED STS-1 INTEROFFICE TRANSPORT																
		First DS1 Loop Combination - Zone 1		1	UNC1X	USLXX	86.47	210.70	114.60	63.96	17.97						
		First DS1 Loop Combination - Zone 2		2	UNC1X	USLXX	114.10	210.70	114.60	63.96	17.97						

CATEGORY	RATE ELEMENTS	Interim	Zone	BCS	USOC	RATES ($)					Svc Order Submitted Elec per LSR	Svc Order Submitted Manually per LSR	Attachment: 2 Incremental Charge - Manual Svc Order vs. Electronic-1st	Attachment: 2 Incremental Charge - Manual Svc Order vs. Electronic-Add'l	Exhibit: A Incremental Charge - Manual Svc Order vs. Electronic-Disc 1st	Exhibit: A Incremental Charge - Manual Svc Order vs. Electronic-Disc Add'l
						Rec	Nonrecurring		Nonrecurring Disconnect		OSS Rates ($)					
							First	Add'l	First	Add'l	SOMEC	SOMAN	SOMAN	SOMAN	SOMAN	SOMAN
	First DS1 Loop Combination - Zone 3		3	UNC1X	USLXX	297.76	210.70	114.60	63.96	17.97						
	Interoffice Transport - Dedicated - STS-1 combination - Per Mile Per Month			UNCSX	1L5XX	4.09										
	Interoffice Transport - Dedicated - STS-1 combination - Facility Termination per month			UNCSX	U1TFS	945.79	350.56	141.58	48.00	23.39						
	3/1 Channel System in combination per month			UNCSX	MQ3	158.20	115.48	56.53	15.12	5.30						
	DS1 COCI in combination per month			UNC1X	UC1D1	11.80	6.71	4.84								
	Additional DS1Loop in the same STS-1 Interoffice Transport Combination - Zone 1		1	UNC1X	USLXX	86.47	210.70	114.60	63.96	17.97						
	Additional DS1Loop in the same STS-1 Interoffice Transport Combination - Zone 2		2	UNC1X	USLXX	114.10	210.70	114.60	63.96	17.97						
	Additional DS1Loop in the same STS-1 Interoffice Transport Combination - Zone 3		3	UNC1X	USLXX	297.76	210.70	114.60	63.96	17.97						
	DS1 COCI in combination per month			UNC1X	UC1D1	11.80	6.71	4.84								
	Nonrecurring Currently Combined Network Elements Switch -As-Is Charge			UNCSX	UNCCC		8.98	8.98	11.17	11.17						
	EXTENDED 4-WIRE 56 KBPS DIGITAL EXTENDED LOOP WITH 56 KBPS INTEROFFICE TRANSPORT															
	4-wire 56 kbps Local Loop in combination - Zone 1		1	UNCDX	UDL56	27.59	125.22	60.48	59.69	7.84						
	4-wire 56 kbps Local Loop in combination - Zone 2		2	UNCDX	UDL56	32.48	125.22	60.48	59.69	7.84						
	4-wire 56 kbps Local Loop in combination - Zone 3		3	UNCDX	UDL56	36.37	125.22	60.48	59.69	7.84						
	Interoffice Transport - Dedicated - 4-wire 56 kbps combination - Per Mile per month			UNCDX	1L5XX	0.01										
	Interoffice Transport - Dedicated - 4-wire 56 kbps combination - Facility Termination per month			UNCDX	U1TD5	17.25	98.09	53.67	56.31	22.42						
	Nonrecurring Currently Combined Network Elements Switch -As-Is Charge			UNCDX	UNCCC		8.98	8.98	11.17	11.17						
	EXTENDED 4-WIRE 64 KBPS DIGITAL EXTENDED LOOP WITH 64 KBPS INTEROFFICE TRANSPORT															
	4-wire 64 kbps Lcoal Loop in Combination - Zone 1		1	UNCDX	UDL64	27.59	125.22	60.48	59.69	7.84						
	4-wire 64 kbps Lcoal Loop in Combination - Zone 2		2	UNCDX	UDL64	32.48	125.22	60.48	59.69	7.84						
	4-wire 64 kbps Lcoal Loop in Combination - Zone 3		3	UNCDX	UDL64	36.37	125.22	60.48	59.69	7.84						
	Interoffice Transport - Dedicated - 4-wire 64 kbps combination - Per Mile per month			UNCDX	1L5XX	0.01										
	Interoffice Transport - Dedicated - 4-wire 64 kbps combination - Facility Termination per month			UNCDX	U1TD6	17.25	98.09	53.67	56.31	22.42						
	Nonrecurring Currently Combined Network Elements Switch -As-Is Charge			UNCDX	UNCCC		8.98	8.98	11.17	11.17						
	EXTENDED 2-WIRE VOICE GRADE LOOP WITH DS1 INTEROFFICE TRANSPORT w/ 3/1 MUX															
	First 2-wire VG Loop (SL2) in Combination - Zone 1		1	UNCVX	UEAL2	12.67	125.22	60.48	59.69	7.84						
	First 2-wire VG Loop (SL2) in Combination - Zone 2		2	UNCVX	UEAL2	17.45	125.22	60.48	59.69	7.84						
	First 2-wire VG Loop (SL2) in Combination - Zone 3		3	UNCVX	UEAL2	33.22	125.22	60.48	59.69	7.84						
	First Interoffice Transport - Dedicated - DS1 combination - Per Mile			UNC1X	1L5XX	0.19										
	First Interoffice Transport - Dedicated - DS1 combination - Facility Termination per month			UNC1X	U1TF1	79.02	181.24	123.53	56.72	22.32						
	Per each DS1 Channelization System Per Month			UNC1X	MQ1	113.33	57.26	14.74	1.86	1.67						
	Per each Voice Grade COCI - Per Month per month			UNCVX	1D1VG	0.62	6.71	4.84								
	3/1 Channel System in combination per month			UNC3X	MQ3	158.20	115.48	56.53	15.12	5.30						
	Per each DS1 COCI in combination per month			UNC1X	UC1D1	11.80	6.71	4.84								
	Each Additional 2-Wire VG Loop(SL 2) in the same DS1 Interoffice Transport Combination - Zone 1		1	UNCVX	UEAL2	12.67	125.22	60.48	59.69	7.84						
	Each Additional 2-Wire VG Loop(SL2) in the same DS1 Interoffice Transport Combination - Zone 2		2	UNCVX	UEAL2	17.45	125.22	60.48	59.69	7.84						
	Each Additional 2-Wire VG Loop(SL2) in the same DS1 Interoffice Transport Combination - Zone 3		3	UNCVX	UEAL2	33.22	125.22	60.48	59.69	7.84						
	Each Additional Voice Grade COCI in combination - per month			UNCVX	1D1VG	0.62	6.71	4.84								
	Each Additional DS1 Interoffice Channel per mile in same 3/1 Channel System per month			UNC1X	1L5XX	0.19										
	Each Additional DS1 Interoffice Channel Facility Termination in same 3/1 Channel System per month			UNC1X	U1TF1	79.02	181.24	123.53	56.72	22.32						

UNBUNDLED NETWORK ELEMENTS - Kentucky														Attachment: 2		Exhibit: A	
CATEGORY		RATE ELEMENTS	Interim	Zone	BCS	USOC	RATES ($)					Svc Order Submitted Elec per LSR	Svc Order Submitted Manually per LSR	Incremental Charge - Manual Svc Order vs. Electronic-1st	Incremental Charge - Manual Svc Order vs. Electronic-Add'l	Incremental Charge - Manual Svc Order vs. Electronic-Disc 1st	Incremental Charge - Manual Svc Order vs. Electronic-Disc Add'l
							Rec	Nonrecurring		Nonrecurring Disconnect		OSS Rates ($)					
								First	Add'l	First	Add'l	SOMEC	SOMAN	SOMAN	SOMAN	SOMAN	SOMAN
		Each Additional DS1 COCI combination per month			UNC1X	UC1D1	11.80	6.71	4.84								
		Nonrecurring Currently Combined Network Elements Switch -As-Is Charge			UNC1X	UNCCC		8.98	8.98	11.17	11.17						
	EXTENDED 4-WIRE VOICE GRADE LOOP WITH DEDICATED DS1 INTEROFFICE TRANSPORT w/ 3/1 MUX																
		First 4-Wire Analog Voice Grade Local Loop in Combination - Zone 1		1	UNCVX	UEAL4	29.26	125.22	60.48	59.69	7.84						
		First 4-Wire Analog Voice Grade Local Loop in Combination - Zone 2		2	UNCVX	UEAL4	34.25	125.22	60.48	59.69	7.84						
		First 4-Wire Analog Voice Grade Local Loop in Combination - Zone 3		3	UNCVX	UEAL4	85.06	125.22	60.48	59.69	7.84						
		First Interoffice Transport - Dedicated - DS1 combination - Per Mile Per Month			UNC1X	1L5XX	0.19										
		First Interoffice Transport - Dedicated - DS1 - Facility Termination Per Month			UNC1X	U1TF1	79.02	181.24	123.53	56.72	22.32						
		Per each 1/0 Channel System in combination Per Month			UNC1X	MQ1	113.33	57.26	14.74	1.86	1.67						
		Per each Voice Grade COCI in combination - per month			UNCVX	1D1VG	0.62	6.71	4.84								
		3/1 Channel System in combination per month			UNC3X	MQ3	158.20	115.48	56.53	15.12	5.30						
		Per each DS1 COCI in combination per month			UNC1X	UC1D1	11.80	6.71	4.84								
		Additional 4-Wire Analog Voice Grade Loop in same DS1 Interoffice Transport Combination - Zone 1		1	UNCVX	UEAL4	29.26	125.22	60.48	59.69	7.84						
		Additional 4-Wire Analog Voice Grade Loop in same DS1 Interoffice Transport Combination - Zone 2		2	UNCVX	UEAL4	34.25	125.22	60.48	59.69	7.84						
		Additional 4-Wire Analog Voice Grade Loop in same DS1 Interoffice Transport Combination - Zone 3		3	UNCVX	UEAL4	85.06	125.22	60.48	59.69	7.84						
		Each Additional DS1 Interoffice Channel per mile in same 3/1 Channel System per month			UNC1X	1L5XX	0.19										
		Each Additional DS1 Interoffice Channel Facility Termination in same 3/1 Channel System per month			UNC1X	U1TF1	79.02	181.24	123.53	56.72	22.32						
		Additional Voice Grade COCI - in combination - per month			UNCVX	1D1VG	0.62	6.71	4.84								
		Nonrecurring Currently Combined Network Elements Switch -As-Is Charge			UNC1X	UNCCC		8.98	8.98	11.17	11.17						
	EXTENDED 4-WIRE 56 KBPS DIGITAL LOOP WITH DEDICATED DS1 INTEROFFICE TRANSPORT w/ 3/1 MUX																
		First 4-Wire 56Kbps Digital Grade Local Loop in Combination - Zone 1		1	UNCDX	UDL56	27.59	125.22	60.48	59.69	7.84						
		First 4-Wire 56Kbps Digital Grade Local Loop in Combination - Zone 2		2	UNCDX	UDL56	32.48	125.22	60.48	59.69	7.84						
		First 4-Wire 56Kbps Digital Grade Local Loop in Combination - Zone 3		3	UNCDX	UDL56	36.37	125.22	60.48	59.69	7.84						
		First Interoffice Transport - Dedicated - DS1 combination - Per Mile Per Month			UNC1X	1L5XX	0.19										
		First Interoffice Transport - Dedicated - DS1 - combination Facility Termination Per Month			UNC1X	U1TF1	79.02	181.24	123.53	56.72	22.32						
		Per each 1/0 Channel System in combination Per Month			UNC1X	MQ1	113.33	57.26	14.74	1.86	1.67						
		Per each OCU-DP COCI (data) COCI per month (2.4-64kbs)			UNCDX	1D1DD	1.32	6.71	4.84								
		3/1 Channel System in combination per month			UNC3X	MQ3	158.20	115.48	56.53	15.12	5.30						
		Per each DS1 COCI in combination per month			UNC1X	UC1D1	11.80	6.71	4.84								
		Additional 4-Wire 56Kbps Digital Grade Loop in same DS1 Interoffice Transport Combination - Zone 1		1	UNCDX	UDL56	27.59	125.22	60.48	59.69	7.84						
		Additional 4-Wire 56Kbps Digital Grade Loop in same DS1 Interoffice Transport Combination - Zone 2		2	UNCDX	UDL56	32.48	125.22	60.48	59.69	7.84						
		Additional 4-Wire 56Kbps Digital Grade Loop in same DS1 Interoffice Transport Combination - Zone 3		3	UNCDX	UDL56	36.37	125.22	60.48	59.69	7.84						
		OCU-DP COCI (data) COCI in combination per month (2.4-64kbs)			UNCDX	1D1DD	1.32	6.71	4.84								
		Each Additional DS1 Interoffice Channel per mile in same 3/1 Channel System per month			UNC1X	1L5XX	0.19										
		Each Additional DS1 Interoffice Channel Facility Termination in same 3/1 Channel System per month			UNC1X	U1TF1	79.02	181.24	123.53	56.72	22.32						

CATEGORY		RATE ELEMENTS	Interim	Zone	BCS	USOC	RATES ($)					Svc Order Submitted Elec per LSR	Svc Order Submitted Manually per LSR	Attachment: 2 Incremental Charge - Manual Svc Order vs. Electronic-1st	Attachment: 2 Incremental Charge - Manual Svc Order vs. Electronic-Add'l	Exhibit: A Incremental Charge - Manual Svc Order vs. Electronic-Disc 1st	Exhibit: A Incremental Charge - Manual Svc Order vs. Electronic-Disc Add'l
							Rec	Nonrecurring		Nonrecurring Disconnect		OSS Rates ($)					
								First	Add'l	First	Add'l	SOMEC	SOMAN	SOMAN	SOMAN	SOMAN	SOMAN
		Each Additional DS1 COCI in the same 3/1 channel system combination per month			UNC1X	UC1D1	11.80	6.71	4.84								
		Nonrecurring Currently Combined Network Elements Switch -As-Is Charge			UNC1X	UNCCC		8.98	8.98	11.17	11.17						
	EXTENDED 4-WIRE 64 KBPS DIGITAL LOOP WITH DEDICATED DS1 INTEROFFICE TRANSPORT w/ 3/1 MUX																
		First 4-Wire 64Kbps Digital Grade Loop in a DS1 Interoffice Transport Combination - Zone 1		1	UNCDX	UDL64	27.59	125.22	60.48	59.69	7.84						
		First 4-Wire 64Kbps Digital Grade Loop in a DS1 Interoffice Transport Combination - Zone 2		2	UNCDX	UDL64	32.48	125.22	60.48	59.69	7.84						
		First 4-Wire 64Kbps Digital Grade Loop in a DS1 Interoffice Transport Combination - Zone 3		3	UNCDX	UDL64	36.37	125.22	60.48	59.69	7.84						
		First Interoffice Transport - Dedicated - DS1 combination - Per Mile Per Month			UNC1X	1L5XX	0.19										
		First Interoffice Transport - Dedicated - DS1 combination - Facility Termination Per Month			UNC1X	U1TF1	79.02	181.24	123.53	56.72	22.32						
		Per each Channel System 1/0 in combination Per Month			UNC1X	MQ1	113.33	57.26	14.74	1.86	1.67						
		Per each OCU-DP COCI (data) in combination - per month (2.4-64kbs)			UNCDX	1D1DD	1.32	6.71	4.84								
		3/1 Channel System in combination per month			UNC3X	MQ3	158.20	115.48	56.53	15.12	5.30						
		Additional 4-Wire 64Kbps Digital Grade Loop in same DS1 Interoffice Transport Combination - Zone 1		1	UNCDX	UDL64	27.59	125.22	60.48	59.69	7.84						
		Additional 4-Wire 64Kbps Digital Grade Loop in same DS1 Interoffice Transport Combination - Zone 2		2	UNCDX	UDL64	32.48	125.22	60.48	59.69	7.84						
		Additional 4-Wire 64Kbps Digital Grade Loop in same DS1 Interoffice Transport Combination - Zone 3		3	UNCDX	UDL64	36.37	125.22	60.48	59.69	7.84						
		Additional OCU-DP COCI (data) - DS1 to DS0 Channel System combination - per month (2.4-64kbs)			UNCDX	1D1DD	1.32	6.71	4.84								
		Each Additional DS1 Interoffice Channel per mile in same 3/1 Channel System per month			UNC1X	1L5XX	0.19										
		Each Additional DS1 Interoffice Channel Facility Termination in same 3/1 Channel System per month			UNC1X	U1TF1	79.02	181.24	123.53	56.72	22.32						
		Each Additional DS1 COCI in the same 3/1 channel system combination per month			UNC1X	UC1D1	11.80	6.71	4.84								
		Nonrecurring Currently Combined Network Elements Switch -As-Is Charge			UNC1X	UNCCC		8.98	8.98	11.17	11.17						
	EXTENDED 2-WIRE ISDN LOOP WITH DS1 INTEROFFICE TRANSPORT w/ 3/1 MUX																
		First 2-Wire ISDN Loop in a DS1 Interoffice Combination Transport - Zone 1		1	UNCNX	U1L2X	18.44	125.22	60.48	59.69	7.84						
		First 2-Wire ISDN Loop in a DS1 Interoffice Combination Transport - Zone 2		2	UNCNX	U1L2X	25.08	125.22	60.48	59.69	7.84						
		First 2-Wire ISDN Loop in a DS1 Interoffice Combination Transport - Zone 3		3	UNCNX	U1L2X	42.87	125.22	60.48	59.69	7.84						
		First Interoffice Transport - Dedicated - DS1 combination - Per Mile per month			UNC1X	1L5XX	0.19										
		First Interoffice Transport - Dedicated - DS1 combination - Facility Termination per month			UNC1X	U1TF1	79.02	181.24	123.53	56.72	22.32						
		Per each Channel System 1/0 in combination - per month			UNC1X	MQ1	113.33	57.26	14.74	1.86	1.67						
		Per each 2-wire ISDN COCI (BRITE) in combination - per month			UNCNX	UC1CA	2.84	6.71	4.84								
		3/1 Channel System in combination per month			UNC3X	MQ3	158.20	115.48	56.53	15.12	5.30						
		Per each DS1 COCI in combination per month			UNC1X	UC1D1	11.80	6.71	4.84								
		Additional 2-wire ISDN Loop in same DS1Interoffice Transport Combination - Zone 1		1	UNCNX	U1L2X	18.44	125.22	60.48	59.69	7.84						
		Additional 2-wire ISDN Loop in same DS1Interoffice Transport Combination - Zone 2		2	UNCNX	U1L2X	25.08	125.22	60.48	59.69	7.84						
		Additional 2-wire ISDN Loop in same DS1Interoffice Transport Combination - Zone 3		3	UNCNX	U1L2X	42.87	125.22	60.48	59.69	7.84						
		Additional 2-wire ISDN COCI (BRITE) in same 1/0 channel system combination- per month			UNCNX	UC1CA	2.84	6.71	4.84								

UNBUNDLED NETWORK ELEMENTS - Kentucky														Attachment: 2		Exhibit: A	
CATEGORY		RATE ELEMENTS	Interim	Zone	BCS	USOC	RATES ($)					Svc Order Submitted Elec per LSR	Svc Order Submitted Manually per LSR	Incremental Charge - Manual Svc Order vs. Electronic-1st	Incremental Charge - Manual Svc Order vs. Electronic-Add'l	Incremental Charge - Manual Svc Order vs. Electronic-Disc 1st	Incremental Charge - Manual Svc Order vs. Electronic-Disc Add'l
							Rec	Nonrecurring		Nonrecurring Disconnect		OSS Rates ($)					
								First	Add'l	First	Add'l	SOMEC	SOMAN	SOMAN	SOMAN	SOMAN	SOMAN
		Each Additional DS1 Interoffice Channel per mile in same 3/1 Channel System per month			UNC1X	1L5XX	0.19										
		Each Additional DS1 Interoffice Channel Facility Termination in same 3/1 Channel System per month			UNC1X	U1TF1	79.02	181.24	123.53	56.72	22.32						
		Each Additional DS1 COCI in the same 3/1 channel system combination per month			UNC1X	UC1D1	11.80	6.71	4.84								
		Nonrecurring Currently Combined Network Elements Switch -As-Is Charge			UNC1X	UNCCC		8.98	8.98	11.17	11.17						
	EXTENDED 4-WIRE DS1 LOOP WITH DEDICATED DS1 INTEROFFICE TRANSPORT w/ 3/1 MUX																
		First 4-wire DS1 Digital Lcoal Loop in Combination - Zone 1		1	UNC1X	USLXX	86.47	210.70	114.60	63.96	17.97						
		First 4-wire DS1 Digital Lcoal Loop in Combination - Zone 2		2	UNC1X	USLXX	114.10	210.70	114.60	63.96	17.97						
		First 4-wire DS1 Digital Lcoal Loop in Combination - Zone 3		3	UNC1X	USLXX	297.76	210.70	114.60	63.96	17.97						
		First Interoffice Transport - Dedicated - DS1 combination - Per Mile Per Month			UNC1X	1L5XX	0.19										
		First Interoffice Transport - Dedicated - DS1 combination - Facility Termination Per Month			UNC1X	U1TF1	79.02	181.24	123.53	56.72	22.32						
		3/1 Channel System in combination per month			UNC3X	MQ3	158.20	115.48	56.53	15.12	5.30						
		Per each DS1 COCI combination per month			UNC1X	UC1D1	11.80	6.71	4.84								
		Each Additional DS1 Interoffice Channel per mile in same 3/1 Channel System per month			UNC1X	1L5XX	0.19										
		Each Additional DS1 Interoffice Channel Facility Termination in same 3/1 Channel System per month			UNC1X	U1TF1	79.02	181.24	123.53	56.72	22.32						
		Each Additional DS1 COCI in the same 3/1 channel system combination per month			UNC1X	UC1D1	11.80	6.71	4.84								
		Additional 4-Wire DS1 Digital Local Loop in Combination - Zone 1		1	UNC1X	USLXX	86.47	210.70	114.60	63.96	17.97						
		Additional 4-Wire DS1 Digital Local Loop in Combination - Zone 2		2	UNC1X	USLXX	114.10	210.70	114.60	63.96	17.97						
		Additional 4-Wire DS1 Digital Local Loop in Combination - Zone 3		3	UNC1X	USLXX	297.76	210.70	114.60	63.96	17.97						
		Nonrecurring Currently Combined Network Elements Switch -As-Is Charge			UNC1X	UNCCC		8.98	8.98	11.17	11.17						
	EXTENDED 4-WIRE 56 KBPS DIGITAL EXTENDED LOOP WITH DS0 INTEROFFICE TRANSPORT																
		First 4-wire 56 kbps Local Loop in combination - Zone 1		1	UNCDX	UDL56	27.59	125.22	60.48	59.69	7.84						
		First 4-wire 56 kbps Local Loop in combination - Zone 2		2	UNCDX	UDL56	32.48	125.22	60.48	59.69	7.84						
		First 4-wire 56 kbps Local Loop in combination - Zone 3		3	UNCDX	UDL56	36.37	125.22	60.48	59.69	7.84						
		First 4-wiree 56 kbps Interoffice Transport - Dedicated - Per Mile per month			UNCDX	1L5XX	0.01										
		First 4-wire 56 kbps Interoffice Transport - Dedicated - Facility Termination per month			UNCDX	U1TD5	17.25	98.09	53.67	56.31	22.42						
		Nonrecurring Currently Combined Network Elements Switch -As-Is Charge			UNCDX	UNCCC		8.98	8.98	11.17	11.17						
	EXTENDED 4-WIRE 64 KBPS DIGITAL EXTENDED LOOP WITH DS0 INTEROFFICE TRANSPORT																
		First 4-wire 64 kbps Local Loop in combination - Zone 1		1	UNCDX	UDL64	27.59	125.22	60.48	59.69	7.84						
		First 4-wire 64 kbps Local Loop in combination - Zone 2		2	UNCDX	UDL64	32.48	125.22	60.48	59.69	7.84						
		First 4-wire 64 kbps Local Loop in combination - Zone 3		3	UNCDX	UDL64	36.37	125.22	60.48	59.69	7.84						
		First I4-wire 65 kbps Interoffice Transport - Dedicated - Per Mile per month			UNCDX	1L5XX	0.01										
		First 4-wire 64 kbps Interoffice Transport - Dedicated - Facility Termination per month			UNCDX	U1TD6	17.25	98.09	53.67	56.31	22.42						
		Nonrecurring Currently Combined Network Elements Switch -As-Is Charge			UNCDX	UNCCC		8.98	8.98	11.17	11.17						
ADDITIONAL NETWORK ELEMENTS																	
	When used as a part of a currently combined facility, the non-recurrng charges do not apply, but a Switch As Is charge does apply.																
	When used as ordinarily combined network elements in All States, the non-recurring charges apply and the Switch As Is Charge does not.																
	Nonrecurring Currently Combined Network Elements "Switch As Is" Charge (One applies to each combination)																
		Nonrecurring Currently Combined Network Elements Switch -As-Is Charge - 2 wire/4-Wire VG			UNCVX	UNCCC		8.98	8.98	11.17	11.17						

UNBUNDLED NETWORK ELEMENTS - Kentucky														Attachment: 2		Exhibit: A	
CATEGORY		RATE ELEMENTS	Interim	Zone	BCS	USOC	RATES ($)					Svc Order Submitted Elec per LSR	Svc Order Submitted Manually per LSR	Incremental Charge - Manual Svc Order vs. Electronic-1st	Incremental Charge - Manual Svc Order vs. Electronic-Add'l	Incremental Charge - Manual Svc Order vs. Electronic-Disc 1st	Incremental Charge - Manual Svc Order vs. Electronic-Disc Add'l
							Rec	Nonrecurring		Nonrecurring Disconnect		OSS Rates ($)					
								First	Add'l	First	Add'l	SOMEC	SOMAN	SOMAN	SOMAN	SOMAN	SOMAN
		Nonrecurring Currently Combined Network Elements Switch -As-Is Charge - 56/64 kbps			UNCDX	UNCCC		8.98	8.98	11.17	11.17						
		Nonrecurring Currently Combined Network Elements Switch -As-Is Charge - DS1			UNC1X	UNCCC		8.98	8.98	11.17	11.17						
		Nonrecurring Currently Combined Network Elements Switch -As-Is Charge - DS3			UNC3X	UNCCC		8.98	8.98	11.17	11.17						
		Nonrecurring Currently Combined Network Elements Switch -As-Is Charge - STS1			UNCSX	UNCCC		8.98	8.98	11.17	11.17						
	Optional Features & Functions:																
		Clear Channel Capability Extended Frame Option - per DS1	I		U1TD1, ULDD1,UNC1X	CCOEF		0I	0I	0I	0I						
		Clear Channel Capability Super FrameOption - per DS1	I		U1TD1, ULDD1,UNC1X	CCOSF		0I	0I	0I	0I						
		Clear Channel Capability (SF/ESF) Option - Subsequent Activity - per DS1	I		ULDD1, U1TD1, UNC1X, USL	NRCCC		184.91S	23.82S	1.99S	0.78S						
		C-bit Parity Option - Subsequent Activity - per DS3	i		U1TD3, ULDD3, UE3, UNC3X	NRCC3		205.70S	7.20S	.6924S	0S						
	MULTIPLEXERS																
		DS1 to DS0 Channel System per month			UNC1X	MQ1	113.33	57.26	14.74	1.86	1.67						
		OCU-DP COCI (data) - DS1 to DS0 Channel System - per month (2.4-64kbs) used for a Local Loop			UDL	1D1DD	1.32	10.07	7.08								
		OCU-DP COCI (data) - DS1 to DS0 Channel System - per month (2.4-64kbs) used for connection to a channelized DS1 Local Channel in the same SWC as collocation			U1TUD	1D1DD	1.32	10.07	7.08								
		2-wire ISDN COCI (BRITE) - DS1 to DS0 Channel Systsem - per month for a Local Loop			UDN	UC1CA	2.84	10.07	7.08								
		2-wire ISDN COCI (BRITE) - DS1 to DS0 Channel Systsem - per month used for connection to a channelized DS1 Local Channel in the same SWC as collocation			U1TUB	UC1CA	2.84	10.07	7.08								
		Voice Grade COCI - DS1 to DS0 Channel System - per month used for a Local Loop			UEA	1D1VG	0.6228	10.07	7.08								
		Voice Grade COCI - DS1 to DS0 Channel System - per month used for connection to a channelized DS1 Local Channel in the same SWC as collocation			U1TUC	1D1VG	0.6228	10.07	7.08								
		DS3 to DS1 Channel System per month			UNC3X	MQ3	158.20	115.48	56.53	15.12	5.30						
		STS-1 to DS1 Channel System per month			UNCSX	MQ3	158.20	115.48	56.53	15.12	5.30						
		DS1 COCI used with Loop per month			USL	UC1D1	11.80	10.07	7.08								
		DS1 COCI (used for connection to a channelized DS1 Local Channel in the same SWC as collocation) per month			U1TUA	UC1D1	11.80	10.07	7.08								
		DS1 COCI used with Interoffice Channel per month			U1TD1	UC1D1	11.80	10.07	7.08								
		DS3 Interface Unit (DS1 COCI) used with Local Channel per month			ULDD1	UC1D1	11.80	10.07	7.08								
UNBUNDLED LOCAL EXCHANGE SWITCHING(PORTS)																	
	Exchange Ports																
	NOTE: Although the Port Rate includes all available features in GA, KY, LA & TN, the desired features will need to be ordered using retail USOCs																
	2-WIRE VOICE GRADE LINE PORT RATES (RES)																
		Exchange Ports - 2-Wire Analog Line Port- Res.			UEPSR	UEPRL	1.49	3.74	3.63	2.23	2.13						
		Exchange Ports - 2-Wire Analog Line Port with Caller ID - Res.			UEPSR	UEPRC	1.49	3.74	3.63	2.23	2.13						
		Exchange Ports - 2-Wire Analog Line Port outgoing only - Res.			UEPSR	UEPRO	1.49	3.74	3.63	2.23	2.13						
		Exchange Ports - 2-Wire VG unbundled KY extended local dialing parity Port with Caller ID - Res.			UEPSR	UEPRM	1.49	3.74	3.63	2.23	2.13						
		Exchange Ports - 2-Wire VG unbundled res, low usage line port with Caller ID (LUM)			UEPSR	UEPAP	1.49	3.74	3.63	2.23	2.13						
		Exchange Ports - 2-Wire Voice Kentucky Residence Dialing Plan without Caller ID			UEPSR	UEPWE	1.49	3.74	3.63	2.23	2.13						
		2-Wire voice unbundled Low Usage Line Port without Caller ID Capability			UEPSR	UEPRT	1.49	3.74	3.63	2.23	2.13						

UNBUNDLED NETWORK ELEMENTS - Kentucky														Attachment: 2		Exhibit: A	
CATEGORY	RATE ELEMENTS	Interim	Zone	BCS	USOC	RATES ($)					Svc Order Submitted Elec per LSR	Svc Order Submitted Manually per LSR	Incremental Charge - Manual Svc Order vs. Electronic-1st	Incremental Charge - Manual Svc Order vs. Electronic-Add'l	Incremental Charge - Manual Svc Order vs. Electronic-Disc 1st	Incremental Charge - Manual Svc Order vs. Electronic-Disc Add'l
						Rec	Nonrecurring		Nonrecurring Disconnect		OSS Rates ($)					
							First	Add'l	First	Add'l	SOMEC	SOMAN	SOMAN	SOMAN	SOMAN	SOMAN
	Subsequent Activity			UEPSR	USASC	0.00	0.00	0.00								
FEATURES																
	All Available Vertical Features			UEPSR	UEPVF	0.00	0.00	0.00								
2-WIRE VOICE GRADE LINE PORT RATES (BUS)																
	Exchange Ports - 2-Wire Analog Line Port without Caller ID - Bus			UEPSB	UEPBL	1.49	3.74	3.63	2.23	2.13						
	Exchange Ports - 2-Wire VG unbundled Line Port with unbundled port with Caller+E484 ID - Bus.			UEPSB	UEPBC	1.49	3.74	3.63	2.23	2.13						
	Exchange Ports - 2-Wire Analog Line Port outgoing only - Bus.			UEPSB	UEPBO	1.49	3.74	3.63	2.23	2.13						
	Exchange Ports - 2-Wire VG unbundled KY extended local dialing parity Port with Caller ID - Bus.			UEPSB	UEPBM	1.49	3.74	3.63	2.23	2.13						
	Exhange Ports - 2-Wire VG unbundled incoming only port with Caller ID - Bus			UEPSB	UEPB1	1.49	3.74	3.63	2.23	2.13						
	Exchange Ports - 2-Wire Voice Kentucky Business Dialing Plan without Caller ID			UEPSB	UEPWF	1.49	3.74	3.63	2.23	2.13						
	2-Wire voice unbundled Incoming Only Port without Caller ID Capability			UEPSB	UEPBE	1.49	3.74	3.63	2.23	2.13						
	Subsequent Activity			UEPSB	USASC	0.00	0.00	0.00								
FEATURES																
	All Available Vertical Features			UEPSB	UEPVF	0.00	0.00	0.00								
EXCHANGE PORT RATES (DID & PBX)																
	2-Wire VG Unbundled 2-Way PBX Trunk - Res			UEPSE	UEPRD	1.49	39.05	18.17	15.38	0.89						
	2-Wire VG Line Side Unbundled 2-Way PBX Trunk - Bus			UEPSP	UEPPC	1.49	39.05	18.17	15.38	0.89						
	2-Wire VG Line Side Unbundled Outward PBX Trunk - Bus			UEPSP	UEPPO	1.49	39.05	18.17	15.38	0.89						
	2-Wire VG Line Side Unbundled Incoming PBX Trunk - Bus			UEPSP	UEPP1	1.49	39.05	18.17	15.38	0.89						
	2-Wire Analog Long Distance Terminal PBX Trunk - Bus			UEPSP	UEPLD	1.49	39.05	18.17	15.38	0.89						
	2-Wire Voice Unbundled PBX LD Terminal Ports			UEPSP	UEPLD	1.49	39.05	18.17	15.38	0.89						
	2-Wire Vice Unbundled 2-Way PBX Usage Port			UEPSP	UEPXA	1.49	39.05	18.17	15.38	0.89						
	2-Wire Voice Unbundled PBX Toll Terminal Hotel Ports			UEPSP	UEPXB	1.49	39.05	18.17	15.38	0.89						
	2-Wire Voice Unbundled PBX LD DDD Terminals Port			UEPSP	UEPXC	1.49	39.05	18.17	15.38	0.89						
	2-Wire Voice Unbundled PBX LD Terminal Switchboard Port			UEPSP	UEPXD	1.49	39.05	18.17	15.38	0.89						
	2-Wire Voice Unbundled PBX LD Terminal Switchboard IDD Capable Port			UEPSP	UEPXE	1.49	39.05	18.17	15.38	0.89						
	2-Wire Voice Unbundled 2-Way PBX Kentucky Room Area Calling Port Without LUD			UEPSP	UEPXF	1.49	39.05	18.17	15.38	0.89						
	2-Wire Voice Unbundled PBX Kentucky LUD Area Calling Port			UEPSP	UEPXG	1.49	39.05	18.17	15.38	0.89						
	2-Wire Voice Unbundled PBX Kentucky Premium Callling Port			UEPSP	UEPXH	1.49	39.05	18.17	15.38	0.89						
	2-Wire Voice Unbundled 2-Way PBX Kentucky Area Callling Port Without LUD			UEPSP	UEPXJ	1.49	39.05	18.17	15.38	0.89						
	2-Wire Voice Unbundled 2-Way PBX Hotel/Hospital Economy Administrative Calling Port			UEPSP	UEPXL	1.49	39.05	18.17	15.38	0.89						
	2-Wire Voice Unbundled 2-Way PBX Hotel/Hospital Economy Room Calling Port			UEPSP	UEPXM	1.49	39.05	18.17	15.38	0.89						
	2-Wire Voice Unbundled 1-Way Outgoing PBX Hotel/Hospital Discount Room Calling Port			UEPSP	UEPXO	1.49	39.05	18.17	15.38	0.89						
	2-Wire Voice Unbundled 1-Way Outgoing PBX Measured Port			UEPSP	UEPXS	1.49	39.05	18.17	15.38	0.89						
	Subsequent Activity			UEPSP	USASC	0.00	0.00	0.00								
FEATURES																
	All Available Vertical Features			UEPSP UEPSE	UEPVF	0.00	0.00	0.00								
EXCHANGE PORT RATES (COIN)																
	Exchange Ports - Coin Port					1.49	3.74	3.63	2.23	2.13						
Local Switching Features offered with Port																
NOTE: Transmission/usage charges associated with POTS circuit switched usage will also apply to circuit switched voice and/or circuit switched data transmission by B-Channels associated with 2-wire ISDN ports.																
NOTE: Access to B Channel or D Channel Packet capabilities will be available only through BFR/New Business Request Process. Rates for the packet capabilities will be determined via the Bona Fide Request/New Business Request Process.																
	Exchange port - 4-wire ISDN trunk port -all available features included				UEPEX	101.60	188.36	95.15	61.92	22.67						
UNBUNDLED LOCAL EXCHANGE SWITCHING(PORTS)																
EXCHANGE PORT RATES																

UNBUNDLED NETWORK ELEMENTS - Kentucky													Attachment: 2		Exhibit: A	
CATEGORY	RATE ELEMENTS	Interim	Zone	BCS	USOC	RATES ($)					Svc Order Submitted Elec per LSR	Svc Order Submitted Manually per LSR	Incremental Charge - Manual Svc Order vs. Electronic-1st	Incremental Charge - Manual Svc Order vs. Electronic-Add'l	Incremental Charge - Manual Svc Order vs. Electronic-Disc 1st	Incremental Charge - Manual Svc Order vs. Electronic-Disc Add'l
						Rec	Nonrecurring		Nonrecurring Disconnect		OSS Rates ($)					
							First	Add'l	First	Add'l	SOMEC	SOMAN	SOMAN	SOMAN	SOMAN	SOMAN
	The DS1 Port rates below for 4-Wire DDITS Trunk Port and 4-Wire ISDN Port in this rate exhibit apply to the embedded base in place as of 10/2/03 until 4/1/04. After 4/1/04 these rates shall revert to tariff rates or a separate agreement.															
	Requests for 4-Wire DDITS Trunk Ports with 4-Wire ISDN DS1 Ports after the effective date of this amendment shall be provided pursuant to a separate agreement or tariff at BellSouth's discretion.															
	Exchange Ports - 2-Wire DID Port			UEPEX	UEPP2	10.51	92.18	15.82	52.16	5.30						
	Exchange Ports - DDITS Port - 4-Wire DS1 Port with DID capability (E:4/1/2004)			UEPDD	UEPDD	74.77	164.86	77.74	60.69	3.86						
	Exchange Ports - 2-Wire ISDN Port (See Notes below.)			UEPTX, UEPSX	U1PMA	13.46	60.60	50.67	32.83	14.17						
	All Features Offered			UEPTX, UEPSX	UEPVF	0.00	0.00	0.00								
	Exchange Ports - 2-Wire ISDN Port -- Channel Profiles			UEPTX, UEPSX	U1UMA	0.00	0.00	0.00								
	NOTE: Transmission/usage charges associated with POTS circuit switched usage will also apply to circuit switched voice and/or circuit switched data transmission by B-Channels associated with 2-wire ISDN ports.															
	NOTE: Access to B Channel or D Channel Packet capabilities will be available only through BFR/New Business Request Process. Rates for the packet capabilities will be determined via the Bona Fide Request/New Business Request Process.															
	EXCHANGE PORT RATES (continued)															
	Exchange Ports - 4-Wire ISDN DS1 Port with Detailed E911 Locator Capability (E:4/1/2004)			UEPEX	UEPEX	101.60	188.36	95.15	61.92	22.67						
	Exchange Ports - 4-Wire ISDN DS1 Port (E:4/1/2004)			UEPDX	UEPDX	101.60	188.36	95.15	61.92	22.67						
	Physical Collocation - DS1 Cross-Connects			UEPEX UEPDX	PE1P1	1.48	44.23	31.98	12.81	11.57						
	Virtual collocation - Special Access & UNE, cross-connect per DS1			UEPEX UEPDX	CNC1X	1.48	44.23	31.98	12.81	11.57						
	Detailed E911 with Locator Capability (required with UEPEX port)															
	Unbundled Exchange Ports, 4-Wire ISDN DS1 Port - E911 Locator Capability - Initial Profile Establishment per CLEC per State			UEPEX	UEP1A	0.00	1,811.00		156.69							
	Unbundled Exchange Ports, 4-Wire ISDN DS1 Port - E911 Locator Capability - Subsequent Profile Changes, Additions, Deletions			UEPEX	UEP1B	0.00	175.82									
	New or Additional PRI Telephone Numbers															
	Unbundled Exchange Ports, 4-Wire ISDN DS1 Port - E911 Locator Capability 2-way Telephone Numbers, per number in E911 profile [New or Additional]			UEPEX	UEP1C	0.07	0.54									
	Unbundled Exchange Ports, 4-Wire ISDN DS1 Port - E911 Locator Capability - Outdial Telephone Numbers, per number in E911 profile [New or Additional]			UEPEX	UEP1D	0.07	12.71	12.71								
	Unbundled Exchange Ports, 4-Wire ISDN DS1 Port - Inward Telephone Numbers - Inward Data Only Option [New or Additional]			UEPDX	UEP1E	0.00	0.54									
	Exchange Ports - 4-Wire ISDN DS1 Port - Subsequent [New] Inward Tel Numbers [Customer Testing Purposes]			UEPEX	PR7ZT	0.00	25.41	25.41								
	LOCAL NUMBER PORTABILITY															
	Local Number Portability (1 per port)			UEPEX UEPDX	LNPCN	1.75										
	INTERFACE (Provsioning Only)															
	Voice/Data			UEPEX	PR71V	0.00	0.00	0.00								
	Digital Data			UEPEX	PR71D	0.00	0.00	0.00								
	Inward Data			UEPDX	PR71E	0.00	0.00	0.00								
	New or Additional Channel															
	New or Additional - Voice/Data "B" Channel			UEPEX	PR7BV	0.00	15.48									
	New or Additional - Digital Data "B" Channel			UEPEX	PR7BF	0.00	15.48									
	New or Additional Inward Data "B" Channel			UEPDX	PR7BD	0.00	15.48									
	New or Additional Useage Sensitive Voice Data "B" Channel			UEPEX	PR7BS	0.00	15.48									
	New or Additional Useage Sensitive Digital Data "B" Channel			UEPEX	PR7BU	0.00	15.48									
	New or Additional PRI "D" Channel			UEPEX	PR7EX	0.00	15.48									
	CALL TYPES															
	Inward			UEPEX UEPDX	PR7C1	0.00	0.00	0.00								
	Outward			UEPEX	PR7CO	0.00	0.00	0.00								
	Two-way			UEPEX	PR7CC	0.00	0.00	0.00								
	UNBUNDLED PORT with REMOTE CALL FORWARDING CAPABILITY															
	UNBUNDLED REMOTE CALL FORWARDING SERVICE - RESIDENCE															
	Unbundled Remote Call Forwarding Service, Area Calling, Res			UEPVR	UERAC	1.49	3.74	3.63								
	Unbundled Remote Call Forwarding Service, Local Calling - Res			UEPVR	UERLC	1.49	3.74	3.63								
	Unbundled Remote Call Forwarding Service, InterLATA - Res			UEPVR	UERTE	1.49	3.74	3.63								

UNBUNDLED NETWORK ELEMENTS - Kentucky														Attachment: 2		Exhibit: A	
CATEGORY		RATE ELEMENTS	Interim	Zone	BCS	USOC	RATES ($)					Svc Order Submitted Elec per LSR	Svc Order Submitted Manually per LSR	Incremental Charge - Manual Svc Order vs. Electronic-1st	Incremental Charge - Manual Svc Order vs. Electronic-Add'l	Incremental Charge - Manual Svc Order vs. Electronic-Disc 1st	Incremental Charge - Manual Svc Order vs. Electronic-Disc Add'l
							Rec	Nonrecurring		Nonrecurring Disconnect		OSS Rates ($)					
								First	Add'l	First	Add'l	SOMEC	SOMAN	SOMAN	SOMAN	SOMAN	SOMAN
		Unbundled Remote Call Forwarding Service, IntraLATA - Res			UEPVR	UERTR	1.49	3.74	3.63								
	Non-Recurring																
		Unbundled Remote Call Forwarding Service - Conversion - Switch-as-is			UEPVR	USAC2		0.10	0.10								
		Unbundled Remote Call Forwarding Service - Conversion with allowed change (PIC and LPIC)			UEPVR	USACC		0.10	0.10								
	UNBUNDLED REMOTE CALL FORWARDING - Bus																
		Unbundled Remote Call Forwarding Service, Area Calling - Bus			UEPVB	UERAC	1.49	3.74	3.63								
		Unbundled Remote Call Forwarding Service, Local Calling - Bus			UEPVB	UERLC	1.49	3.74	3.63								
		Unbundled Remote Call Forwarding Service, InterLATA - Bus			UEPVB	UERTE	1.49	3.74	3.63								
		Unbundled Remote Call Forwarding Service, IntraLATA - Bus			UEPVB	UERTR	1.49	3.74	3.63								
		Unbundled Remote Call Forwarding Service Expanded and Exception Local Calling			UEPVB	UERVJ	1.49	3.74	3.63								
	Non-Recurring																
		Unbundled Remote Call Forwarding Service - Conversion - Switch-as-is			UEPVB	USAC2		0.10	0.10								
		Unbundled Remote Call Forwarding Service - Conversion with allowed change (PIC and LPIC)			UEPVB	USACC		0.10	0.10								
UNBUNDLED LOCAL SWITCHING, PORT USAGE																	
	End Office Switching (Port Usage)																
		End Office Switching Function, Per MOU					0.0011971										
		End Office Trunk Port - Shared, Per MOU					0.0002112										
	Tandem Switching (Port Usage) (Local or Access Tandem)																
		Tandem Switching Function Per MOU					0.000194										
		Tandem Trunk Port - Shared, Per MOU					0.0002416										
		Tandem Switching Function Per MOU (Melded)					0.000094381										
		Tandem Trunk Port - Shared, Per MOU (Melded)					0.000117538										
		Melded Factor: 48.65% of the Tandem Rate															
	Common Transport																
		Common Transport - Per Mile, Per MOU					0.000003										
		Common Transport - Facilities Termination Per MOU					0.0007466										
UNBUNDLED PORT/LOOP COMBINATIONS - COST BASED RATES																	
	Cost Based Rates are applied where BellSouth is required by FCC and/or State Commission rule to provide Unbundled Local Switching or Switch Ports.																
	Features shall apply to the Unbundled Port/Loop Combination - Cost Based Rate section in the same manner as they are applied to the Stand-Alone Unbundled Port section of this Rate Exhibit.																
	End Office and Tandem Switching Usage and Common Transport Usage rates in the Port section of this rate exhibit shall apply to all combinations of loop/port network elements except for UNE Coin Port/Loop Combinations.																
	The first and additional Port nonrecurring charges apply to Not Currently Combined Combos. For Currently Combined Combos the nonrecurring charges shall be those identified in the Nonrecurring - Currently Combined sections.																
	2-WIRE VOICE GRADE LOOP WITH 2-WIRE LINE PORT (RES)																
	UNE Port/Loop Combination Rates																
		2-Wire VG Loop/Port Combo - Zone 1		1			10.79										
		2-Wire VG Loop/Port Combo - Zone 2		2			15.52										
		2-Wire VG Loop/Port Combo - Zone 3		3			31.74										
	UNE Loop Rates																
		2-Wire Voice Grade Loop (SL1) - Zone 1		1	UEPRX	UEPLX	9.64										
		2-Wire Voice Grade Loop (SL1) - Zone 2		2	UEPRX	UEPLX	14.37										
		2-Wire Voice Grade Loop (SL1) - Zone 3		3	UEPRX	UEPLX	30.59										
	2-Wire Voice Grade Line Port Rates (Res)																
		2-Wire voice unbundled port - residence			UEPRX	UEPRL	1.15	21.29	15.49	2.85	2.67						
		2-Wire voice unbundled port with Caller ID - res			UEPRX	UEPRC	1.15	21.29	15.49	2.85	2.67						
		2-Wire voice unbundled port outgoing only - res			UEPRX	UEPRO	1.15	21.29	15.49	2.85	2.67						
		2-Wire voice Grade unbundled Kentucky extended local dialing parity port with Caller ID - res			UEPRX	UEPRM	1.15	21.29	15.49	2.85	2.67						
		2-Wire voice unbundles res, low usage line port with Caller ID (LUM)			UEPRX	UEPAP	1.15	21.29	15.49	2.85	2.67						
		2-Wire Voice Unbundled Kentucky Residence Dialing Plan without Caller ID			UEPRX	UEPWE	1.15	21.29	15.49	2.85	2.67						
		2-Wire voice unbundled Low Usage Line Port without Caller ID Capability			UEPRX	UEPRT	1.15	21.29	15.49	2.85	2.67						

UNBUNDLED NETWORK ELEMENTS - Kentucky														Attachment: 2		Exhibit: A	
CATEGORY	RATE ELEMENTS	Interim	Zone	BCS	USOC	RATES ($)					Svc Order Submitted Elec per LSR	Svc Order Submitted Manually per LSR	Incremental Charge - Manual Svc Order vs. Electronic-1st	Incremental Charge - Manual Svc Order vs. Electronic-Add'l	Incremental Charge - Manual Svc Order vs. Electronic-Disc 1st	Incremental Charge - Manual Svc Order vs. Electronic-Disc Add'l
						Rec	Nonrecurring		Nonrecurring Disconnect		OSS Rates ($)					
							First	Add'l	First	Add'l	SOMEC	SOMAN	SOMAN	SOMAN	SOMAN	SOMAN
FEATURES																
	All Features Offered			UEPRX	UEPVF	0.00	0.00	0.00								
LOCAL NUMBER PORTABILITY																
	Local Number Portability (1 per port)			UEPRX	LNPCX	0.35										
NONRECURRING CHARGES (NRCs) - CURRENTLY COMBINED																
	2-Wire Voice Grade Loop / Line Port Combination - Conversion - Switch-as-is			UEPRX	USAC2		0.10	0.10								
	2-Wire Voice Grade Loop / Line Port Combination - Conversion - Switch with change			UEPRX	USACC		0.10	0.10								
ADDITIONAL NRCs																
	2-Wire Voice Grade Loop/Line Port Combination - Subsequent Activity			UEPRX	USAS2	0.00	0.00	0.00								
	Unbundled Miscellaneous Rate Element, Tag Loop at End User Premise			UEPRX	URETL		8.33	0.83								
OFF/ON PREMISES EXTENSION CHANNELS																
	2 Wire Analog Voice Grade Extension Loop – Non-Design		1	UEPRX	UEAEN	10.56	46.66	22.57	26.65	7.65						
	2 Wire Analog Voice Grade Extension Loop – Non-Design		2	UEPRX	UEAEN	15.34	46.66	22.57	26.65	7.65						
	2 Wire Analog Voice Grade Extension Loop – Non-Design		3	UEPRX	UEAEN	31.11	46.66	22.57	26.65	7.65						
	2 Wire Analog Voice Grade Extension Loop – Design		1	UEPRX	UEAED	12.67	134.89	81.87	73.65	14.88						
	2 Wire Analog Voice Grade Extension Loop – Design		2	UEPRX	UEAED	17.45	134.89	81.87	73.65	14.88						
	2 Wire Analog Voice Grade Extension Loop – Design		3	UEPRX	UEAED	33.22	134.89	81.87	73.65	14.88						
INTEROFFICE TRANSPORT																
	Interoffice Transport - Dedicated - 2 Wire Voice Grade - Facility Termination			UEPRX	U1TV2	23.95	98.09	53.67	56.31	22.42						
	Interoffice Transport - Dedicated - 2 Wire Voice Grade - Per Mile or Fraction Mile			UEPRX	U1TVM	0.0095	0.00	0.00								
2-WIRE VOICE GRADE LOOP WITH 2-WIRE LINE PORT (BUS)																
UNE Port/Loop Combination Rates																
	2-Wire VG Loop/Port Combo - Zone 1		1			10.79										
	2-Wire VG Loop/Port Combo - Zone 2		2			15.52										
	2-Wire VG Loop/Port Combo - Zone 3		3			31.74										
UNE Loop Rates																
	2-Wire Voice Grade Loop (SL1) - Zone 1		1	UEPBX	UEPLX	9.64										
	2-Wire Voice Grade Loop (SL1) - Zone 2		2	UEPBX	UEPLX	14.37										
	2-Wire Voice Grade Loop (SL1) - Zone 3		3	UEPBX	UEPLX	30.59										
2-Wire Voice Grade Line Port (Bus)																
	2-Wire voice unbundled port without Caller ID - bus			UEPBX	UEPBL	1.15	21.29	15.49	2.85	2.67						
	2-Wire voice unbundled port with Caller + E484 ID - bus			UEPBX	UEPBC	1.15	21.29	15.49	2.85	2.67						
	2-Wire voice unbundled port outgoing only - bus			UEPBX	UEPBO	1.15	21.29	15.49	2.85	2.67						
	2-Wire voice Grade unbundled Kentucky extended local dialing parity port with Caller ID - bus			UEPBX	UEPBM	1.15	21.29	15.49	2.85	2.67						
	2-Wire voice unbundled incoming only port with Caller ID - Bus			UEPBX	UEPB1	1.15	21.29	15.49	2.85	2.67						
	2-Wire Voice Unbundled Kentucky Business Dialing Plan without Caller ID			UEPBX	UEPWF	1.15	21.29	15.49	2.85	2.67						
	2-Wire voice unbundled Incoming Only Port without Caller ID Capability			UEPBX	UEPBE	1.15	21.29	15.49	2.85	2.67						
LOCAL NUMBER PORTABILITY																
	Local Number Portability (1 per port)			UEPBX	LNPCX	0.35										
FEATURES																
	All Features Offered			UEPBX	UEPVF	0.00	0.00	0.00								
NONRECURRING CHARGES (NRCs) - CURRENTLY COMBINED																
	2-Wire Voice Grade Loop / Line Port Combination - Conversion - Switch-as-is			UEPBX	USAC2		0.10	0.10								
	2-Wire Voice Grade Loop / Line Port Combination - Conversion - Switch with change			UEPBX	USACC		0.10	0.10								
ADDITIONAL NRCs																
	2-Wire Voice Grade Loop/Line Port Combination - Subsequent Activity			UEPBX	USAS2		0.00	0.00								

UNBUNDLED NETWORK ELEMENTS - Kentucky													Attachment: 2		Exhibit: A	
CATEGORY	RATE ELEMENTS	Interim	Zone	BCS	USOC	RATES ($)					Svc Order Submitted Elec per LSR	Svc Order Submitted Manually per LSR	Incremental Charge - Manual Svc Order vs. Electronic-1st	Incremental Charge - Manual Svc Order vs. Electronic-Add'l	Incremental Charge - Manual Svc Order vs. Electronic-Disc 1st	Incremental Charge - Manual Svc Order vs. Electronic-Disc Add'l
						Rec	Nonrecurring		Nonrecurring Disconnect		OSS Rates ($)					
							First	Add'l	First	Add'l	SOMEC	SOMAN	SOMAN	SOMAN	SOMAN	SOMAN
	Unbundled Miscellaneous Rate Element, Tag Loop at End User Premise			UEPBX	URETL		8.33	0.83								
OFF/ON PREMISES EXTENSION CHANNELS																
	2 Wire Analog Voice Grade Extension Loop – Non-Design		1	UEPBX	UEAEN	10.56	46.66	22.57	26.65	7.65						
	2 Wire Analog Voice Grade Extension Loop – Non-Design		2	UEPBX	UEAEN	15.34	46.66	22.57	26.65	7.65						
	2 Wire Analog Voice Grade Extension Loop – Non-Design		3	UEPBX	UEAEN	31.11	46.66	22.57	26.65	7.65						
	2 Wire Analog Voice Grade Extension Loop – Design		1	UEPBX	UEAED	12.67	134.89	81.87	73.65	14.88						
	2 Wire Analog Voice Grade Extension Loop – Design		2	UEPBX	UEAED	17.45	134.89	81.87	73.65	14.88						
	2 Wire Analog Voice Grade Extension Loop – Design		3	UEPBX	UEAED	33.22	134.89	81.87	73.65	14.88						
INTEROFFICE TRANSPORT																
	Interoffice Transport - Dedicated - 2 Wire Voice Grade - Facility Termination			UEPBX	U1TV2	23.95	98.09	53.67	56.31	22.42						
	Interoffice Transport - Dedicated - 2 Wire Voice Grade - Per Mile or Fraction Mile			UEPBX	U1TVM	0.0095	0.00	0.00								
2-WIRE VOICE GRADE LOOP WITH 2-WIRE LINE PORT (RES - PBX)																
UNE Port/Loop Combination Rates																
	2-Wire VG Loop/Port Combo - Zone 1		1			10.79										
	2-Wire VG Loop/Port Combo - Zone 2		2			15.52										
	2-Wire VG Loop/Port Combo - Zone 3		3			31.74										
UNE Loop Rates																
	2-Wire Voice Grade Loop (SL 1) - Zone 1		1	UEPRG	UEPLX	9.64										
	2-Wire Voice Grade Loop (SL 1) - Zone 2		2	UEPRG	UEPLX	14.37										
	2-Wire Voice Grade Loop (SL 1) - Zone 3		3	UEPRG	UEPLX	30.59										
2-Wire Voice Grade Line Port Rates (RES - PBX)																
	2-Wire VG Unbundled Combination 2-Way PBX Trunk Port - Res			UEPRG	UEPRD	1.15	21.29	15.49	2.85	2.67						
LOCAL NUMBER PORTABILITY																
	Local Number Portability (1 per port)			UEPRG	LNPCP	3.15	0.00	0.00								
FEATURES																
	All Features Offered			UEPRG	UEPVF	0.00	0.00	0.00								
NONRECURRING CHARGES (NRCs) - CURRENTLY COMBINED																
	2-Wire Voice Grade Loop/ Line Port Combination (PBX) - Conversion - Switch-As-Is			UEPRG	USAC2		8.45	1.91								
	2-Wire Voice Grade Loop/ Line Port Combination (PBX) - Conversion - Switch with Change			UEPRG	USACC		8.45	1.91								
ADDITIONAL NRCs																
	2-Wire Voice Grade Loop/ Line Port Combination (PBX) - Subsequent Activity			UEPRG	USAS2	0.00	0.00	0.00								
	PBX Subsequent Activity - Change/Rearrange Multiline Hunt Group						7.86	7.86								
	Unbundled Miscellaneous Rate Element, Tag Loop at End User Premise			UEPRG	URETL		8.33	0.83								
OFF/ON PREMISES EXTENSION CHANNELS																
	Local Channel Voice grade, per termination		1	UEPRG	P2JHX	12.67	134.89	81.87	73.65	14.88						
	Local Channel Voice grade, per termination		2	UEPRG	P2JHX	17.45	134.89	81.87	73.65	14.88						
	Local Channel Voice grade, per termination		3	UEPRG	P2JHX	33.22	134.89	81.87	73.65	14.88						
	Non-Wire Direct Serve Channel Voice Grade		1	UEPRG	SDD2X	12.68	170.06	78.10	119.62	15.80						
	Non-Wire Direct Serve Channel Voice Grade		2	UEPRG	SDD2X	18.12	170.06	78.10	119.62	15.80						
	Non-Wire Direct Serve Channel Voice Grade		3	UEPRG	SDD2X	29.64	170.06	78.10	119.62	15.00						
INTEROFFICE TRANSPORT																
	Interoffice Transport - Dedicated - 2 Wire Voice Grade - Facility Termination			UEPRG	U1TV2	23.95	98.09	53.67	56.31	22.42						
	Interoffice Transport - Dedicated - 2 Wire Voice Grade - Per Mile or Fraction Mile			UEPRG	U1TVM	0.0095	0.00	0.00								
2-WIRE VOICE GRADE LOOP WITH 2-WIRE LINE PORT (BUS - PBX)																
UNE Port/Loop Combination Rates																
	2-Wire VG Loop/Port Combo - Zone 1		1			10.79										
	2-Wire VG Loop/Port Combo - Zone 2		2			15.52										
	2-Wire VG Loop/Port Combo - Zone 3		3			31.74										

UNBUNDLED NETWORK ELEMENTS - Kentucky														Attachment: 2		Exhibit: A	
CATEGORY	RATE ELEMENTS	Interim	Zone	BCS	USOC	RATES ($)					Svc Order Submitted Elec per LSR	Svc Order Submitted Manually per LSR	Incremental Charge - Manual Svc Order vs. Electronic-1st	Incremental Charge - Manual Svc Order vs. Electronic-Add'l	Incremental Charge - Manual Svc Order vs. Electronic-Disc 1st	Incremental Charge - Manual Svc Order vs. Electronic-Disc Add'l
						Rec	Nonrecurring		Nonrecurring Disconnect		OSS Rates ($)					
							First	Add'l	First	Add'l	SOMEC	SOMAN	SOMAN	SOMAN	SOMAN	SOMAN
UNE Loop Rates																
	2-Wire Voice Grade Loop (SL 1) - Zone 1		1	UEPPX	UEPLX	9.64										
	2-Wire Voice Grade Loop (SL 1) - Zone 2		2	UEPPX	UEPLX	14.37										
	2-Wire Voice Grade Loop (SL 1) - Zone 3		3	UEPPX	UEPLX	30.59										
2-Wire Voice Grade Line Port Rates (BUS - PBX)																
	Line Side Unbundled Combination 2-Way PBX Trunk Port - Bus			UEPPX	UEPPC	1.15	21.29	15.49	2.85	2.67						
	Line Side Unbundled Outward PBX Trunk Port - Bus			UEPPX	UEPPO	1.15	21.29	15.49	2.85	2.67						
	Line Side Unbundled Incoming PBX Trunk Port - Bus			UEPPX	UEPP1	1.15	21.29	15.49	2.85	2.67						
	2-Wire Voice Unbundled OutDial Alabama NAR Area Calling Port			UEPPX	UEPOA											
	2-Wire Voice Unbundled PBX LD Terminal Ports			UEPPX	UEPLD	1.15	21.29	15.49	2.85	2.67						
	2-Wire Voice Unbundled 2-Way Combination PBX Usage Port			UEPPX	UEPXA	1.15	21.29	15.49	2.85	2.67						
	2-Wire Voice Unbundled PBX Toll Terminal Hotel Ports			UEPPX	UEPXB	1.15	21.29	15.49	2.85	2.67						
	2-Wire Voice Unbundled PBX LD DDD Terminals Port			UEPPX	UEPXC	1.15	21.29	15.49	2.85	2.67						
	2-Wire Voice Unbundled PBX LD Terminal Switchboard Port			UEPPX	UEPXD	1.15	21.29	15.49	2.85	2.67						
	2-Wire Voice Unbundled PBX LD Terminal Switchboard IDD Capable Port			UEPPX	UEPXE	1.15	21.29	15.49	2.85	2.67						
	2-Wire Voice Unbundled 2-Way PBX Kentucky Room Area Calling Port without LUD			UEPPX	UEPXF	1.15	21.29	15.49	2.85	2.67						
	2-Wire Voice Unbundled PBX Kentucky LUD Area Calling Port			UEPPX	UEPXG	1.15	21.29	15.49	2.85	2.67						
	2-Wire Voice Unbundled PBX Kentucky Premium Calling Port			UEPPX	UEPXH	1.15	21.29	15.49	2.85	2.67						
	2-Wire Voice Unbundled 2-Way Kentucky Area Calling Port without LUD			UEPPX	UEPXJ	1.15	21.29	15.49	2.85	2.67						
	2-Wire Voice Unbundled OutDial Kentucky NAR Area Calling Port			UEPPX	UEPOK	1.15	21.29	15.49	2.85	2.67						
	2-Wire Voice Unbundled 2-Way PBX Hotel/Hospital Economy Administrative Calling Port			UEPPX	UEPXL	1.15	21.29	15.49	2.85	2.67						
	2-Wire Voice Unbundled 2-Way PBX Hotel/Hospital Economy Room Calling Port			UEPPX	UEPXM	1.15	21.29	15.49	2.85	2.67						
	2-Wire Voice Unbundled 1-Way Outgoing PBX Hotel/Hospital Discount Room Calling Port			UEPPX	UEPXO	1.15	21.29	15.49	2.85	2.67						
	2-Wire Voice Unbundled 1-Way Outgoing PBX Measured Port			UEPPX	UEPXS	1.15	21.29	15.49	2.85	2.67						
LOCAL NUMBER PORTABILITY																
	Local Number Portability (1 per port)			UEPPX	LNPCP	3.15	0.00	0.00								
FEATURES																
	All Features Offered			UEPPX	UEPVF	0.00	0.00	0.00								
NONRECURRING CHARGES (NRCs) - CURRENTLY COMBINED																
	2-Wire Voice Grade Loop/ Line Port Combination (PBX) - Conversion - Switch-As-Is			UEPPX	USAC2		8.45	1.91								
	2-Wire Voice Grade Loop/ Line Port Combination (PBX) - Conversion - Switch with Change			UEPPX	USACC		8.45	1.91								
ADDITIONAL NRCs																
	2-Wire Voice Grade Loop/ Line Port Combination (PBX) - Subsequent Activity			UEPPX	USAS2	0.00	0.00	0.00								
	PBX Subsequent Activity - Change/Rearrange Multiline Hunt Group						7.86	7.86								
	Unbundled Miscellaneous Rate Element, Tag Loop at End User Premise			UEPPX	URETL		8.33	0.83								
OFF/ON PREMISES EXTENSION CHANNELS																
	Local Channel Voice grade, per termination		1	UEPPX	P2JHX	12.67	134.89	81.87	73.65	14.88						
	Local Channel Voice grade, per termination		2	UEPPX	P2JHX	17.45	134.89	81.87	73.65	14.88						
	Local Channel Voice grade, per termination		3	UEPPX	P2JHX	33.22	134.89	81.87	73.65	14.88						
	Non-Wire Direct Serve Channel Voice Grade		1	UEPPX	SDD2X	12.68	170.06	78.10	119.62	15.80						
	Non-Wire Direct Serve Channel Voice Grade		2	UEPPX	SDD2X	18.12	170.06	78.10	119.62	15.80						
	Non-Wire Direct Serve Channel Voice Grade		3	UEPPX	SDD2X	29.64	170.06	78.10	119.62	15.00						
INTEROFFICE TRANSPORT																
	Interoffice Transport - Dedicated - 2 Wire Voice Grade - Facility Termination			UEPPX	U1TV2	23.95	98.09	53.67	56.31	22.42						

UNBUNDLED NETWORK ELEMENTS - Kentucky														Attachment: 2		Exhibit: A	
CATEGORY		RATE ELEMENTS	Interim	Zone	BCS	USOC	RATES ($)					Svc Order Submitted Elec per LSR	Svc Order Submitted Manually per LSR	Incremental Charge - Manual Svc Order vs. Electronic-1st	Incremental Charge - Manual Svc Order vs. Electronic-Add'l	Incremental Charge - Manual Svc Order vs. Electronic-Disc 1st	Incremental Charge - Manual Svc Order vs. Electronic-Disc Add'l
							Rec	Nonrecurring		Nonrecurring Disconnect		OSS Rates ($)					
								First	Add'l	First	Add'l	SOMEC	SOMAN	SOMAN	SOMAN	SOMAN	SOMAN
		Interoffice Transport - Dedicated - 2 Wire Voice Grade - Per Mile or Fraction Mile			UEPPX	U1TVM	0.0095	0.00	0.00								
	2-WIRE VOICE GRADE LOOP WITH 2-WIRE ANALOG LINE COIN PORT																
	UNE Port/Loop Combination Rates																
		2-Wire VG Coin Port/Loop Combo – Zone 1		1			10.79										
		2-Wire VG Coin Port/Loop Combo – Zone 2		2			15.52										
		2-Wire VG Coin Port/Loop Combo – Zone 3		3			31.74										
	UNE Loop Rates																
		2-Wire Voice Grade Loop (SL1) - Zone 1		1	UEPCO	UEPLX	9.64										
		2-Wire Voice Grade Loop (SL1) - Zone 2		2	UEPCO	UEPLX	14.37										
		2-Wire Voice Grade Loop (SL1) - Zone 3		3	UEPCO	UEPLX	30.59										
	2-Wire Voice Grade Line Ports (COIN)																
		2-Wire Coin 2-Way without Operator Screening and without Blocking (AL, KY, LA, MS)			UEPCO	UEPRF	1.15	21.29	15.49	2.85	2.67						
		2-Wire Coin 2-Way with Operator Screening (AL, KY)			UEPCO	UEPRE	1.15	21.29	15.49	2.85	2.67						
		2-Wire Coin 2-Way with Operator Screening and Blocking: 011, 900/976, 1+DDD (AL, KY, LA, MS)			UEPCO	UEPRA	1.15	21.29	15.49	2.85	2.67						
		2-Wire Coin 2-Way with Operator Screening and 011 Blocking (KY)			UEPCO	UEPKA	1.15	21.29	15.49	2.85	2.67						
		2-Wire Coin 2-Way with Operator Screening & Blocking: 900/976, 1+DDD, 011+, & Local (AL, KY, LA, MS)			UEPCO	UEPCD	1.15	21.29	15.49	2.85	2.67						
		2-Wire Coin Outward without Blocking and without Operator Screening (KY, LA, MS)			UEPCO	UEPRN	1.15	21.29	15.49	2.85	2.67						
		2-Wire Coin Outward with Operator Screening and 011 Blocking (GA, KY, MS)			UEPCO	UEPRJ	1.15	21.29	15.49	2.85	2.67						
		2-Wire Coin Outward with Operator Screening and Blocking: 011, 900/976, 1+DDD (AL, KY, LA, MS)			UEPCO	UEPRH	1.15	21.29	15.49	2.85	2.67						
		2-Wire Coin Outward Operator Screening & Blocking: 900/976, 1+DDD, 011+, and Local (AL, KY, LA, MS)			UEPCO	UEPCN	1.15	21.29	15.49	2.85	2.67						
		2-Wire 2-Way Smartline with 900/976 (all states except LA)			UEPCO	UEPCK	1.15	21.29	15.49	2.85	2.67						
		2-Wire Coin Outward Smartline with 900/976 (all states except LA)			UEPCO	UEPCR	1.15	21.29	15.49	2.85	2.67						
	ADDITIONAL UNE COIN PORT/LOOP (RC)																
		UNE Coin Port/Loop Combo Usage (Flat Rate)			UEPCO	URECU	2.57	0.00	0.00	0.00	0.00						
	LOCAL NUMBER PORTABILITY																
		Local Number Portability (1 per port)			UEPCO	LNPCX	0.35										
	NONRECURRING CHARGES - CURRENTLY COMBINED																
		2-Wire Voice Grade Loop / Line Port Combination - Conversion - Switch-as-is			UEPCO	USAC2		0.10	0.10								
		2-Wire Voice Grade Loop / Line Port Combination - Conversion - Switch with change			UEPCO	USACC		0.10	0.10								
	ADDITIONAL NRCs																
		2-Wire Voice Grade Loop/Line Port Combination - Subsequent Activity			UEPCO	USAS2		0.00	0.00								
		Unbundled Miscellaneous Rate Element, Tag Loop at End User Premise			UEPCO	URETL		8.33	0.83								
	2-WIRE VOICE LOOP/ 2WIRE VOICE GRADE IO TRANSPORT/ 2-WIRE LINE PORT (RES)																
	UNE Port/Loop Combination Rates																
		2-Wire VG Loop/IO Tranport/Port Combo - Zone 1		1			13.90										
		2-Wire VG Loop/IO Tranport/Port Combo - Zone 2		2			18.68										
		2-Wire VG Loop/IO Tranport/Port Combo - Zone 3		3			34.45										
	UNE Loop Rates																
		2-Wire Voice Grade Loop (SL2) - Zone 1		1	UEPFR	UECF2	12.67										
		2-Wire Voice Grade Loop (SL2) - Zone 2		2	UEPFR	UECF2	17.45										
		2-Wire Voice Grade Loop (SL2) - Zone 3		3	UEPFR	UECF2	33.22										
	2-Wire Voice Grade Line Port Rates (Res)																
		2-Wire voice unbundled port - residence			UEPFR	UEPRL	1.23	128.96	64.11	61.92	9.97						
		2-Wire voice unbundled port with Caller ID - res			UEPFR	UEPRC	1.23	128.96	64.11	61.92	9.97						
		2-Wire voice unbundled port outgoing only - res			UEPFR	UEPRO	1.23	128.96	64.11	61.92	9.97						

CATEGORY	RATE ELEMENTS	Interim	Zone	BCS	USOC	RATES ($)					Svc Order Submitted Elec per LSR	Svc Order Submitted Manually per LSR	Attachment: 2 Incremental Charge - Manual Svc Order vs. Electronic-1st	Attachment: 2 Incremental Charge - Manual Svc Order vs. Electronic-Add'l	Exhibit: A Incremental Charge - Manual Svc Order vs. Electronic-Disc 1st	Exhibit: A Incremental Charge - Manual Svc Order vs. Electronic-Disc Add'l
						Rec	Nonrecurring		Nonrecurring Disconnect		OSS Rates ($)					
							First	Add'l	First	Add'l	SOMEC	SOMAN	SOMAN	SOMAN	SOMAN	SOMAN
	2-Wire voice Grade unbundled Kentucky extended local dialing parity port with Caller ID - res			UEPFR	UEPRM	1.23	128.96	64.11	61.92	9.97						
	2-Wire voice unbundles res, low usage line port with Caller ID (LUM)			UEPFR	UEPAP	1.23	128.96	64.11	61.92	9.97						
	2-Wire Voice Unbundled Kentucky Residence Dialing Plan without Caller ID			UEPFR	UEPWE	1.23	128.96	64.11	61.92	9.97						
	INTEROFFICE TRANSPORT															
	Interoffice Transport - Dedicated - 2 Wire Voice Grade - Facility Termination			UEPFR	U1TV2	23.95	98.09	53.67	56.31	22.42						
	Interoffice Transport - Dedicated - 2 Wire Voice Grade - Per Mile or Fraction Mile			UEPFR	1L5XX	0.0095										
	FEATURES															
	All Features Offered			UEPFR	UEPVF	0.00	0.00	0.00								
	LOCAL NUMBER PORTABILITY															
	Local Number Portability (1 per port)			UEPFR	LNPCX	0.35										
	NONRECURRING CHARGES (NRCs) - CURRENTLY COMBINED															
	2-Wire Loop / Dedicated IO Transport / 2 Wire Line Port Combination - Conversion - Switch-as-is			UEPFR	USAC2		9.03	1.87								
	2-Wire Loop / Dedicated IO Transport / 2 Wire Line Port Combination - Conversion - Switch-With-Change			UEPFR	USACC		9.03	1.87								
	Unbundled Miscellaneous Rate Element, Tag Designed Loop at End User Premise			UEPFR	URETN		11.21	1.10								
	2-WIRE VOICE LOOP/ 2WIRE VOICE GRADE IO TRANSPORT/ 2-WIRE LINE PORT (BUS)															
	UNE Port/Loop Combination Rates															
	2-Wire VG Loop/IO Tranport/Port Combo - Zone 1		1			13.90										
	2-Wire VG Loop/IO Tranport/Port Combo - Zone 2		2			18.68										
	2-Wire VG Loop/IO Tranport/Port Combo - Zone 3		3			34.45										
	UNE Loop Rates															
	2-Wire Voice Grade Loop (SL2) - Zone 1		1	UEPFB	UECF2	12.67										
	2-Wire Voice Grade Loop (SL2) - Zone 2		2	UEPFB	UECF2	17.45										
	2-Wire Voice Grade Loop (SL2) - Zone 3		3	UEPFB	UECF2	33.22										
	2-Wire Voice Grade Line Port (Bus)															
	2-Wire voice unbundled port without Caller ID - bus			UEPFB	UEPBL	1.23	128.96	64.11	61.92	9.97						
	2-Wire voice unbundled port with Caller + E484 ID - bus			UEPFB	UEPBC	1.23	128.96	64.11	61.92	9.97						
	2-Wire voice unbundled port outgoing only - bus			UEPFB	UEPBO	1.23	128.96	64.11	61.92	9.97						
	2-Wire voice Grade unbundled Kentucky extended local dialing parity port with Caller ID - bus			UEPFB	UEPBM	1.23	128.96	64.11	61.92	9.97						
	2-Wire voice unbundled incoming only port with Caller ID - Bus			UEPFB	UEPB1	1.23	128.96	64.11	61.92	9.97						
	2-Wire Voice Unbundled Kentucky Business Dialing Plan without Caller ID			UEPFB	UEPWF	1.23	128.96	64.11	61.92	9.97						
	LOCAL NUMBER PORTABILITY															
	Local Number Portability (1 per port)			UEPFB	LNPCX	0.35										
	INTEROFFICE TRANSPORT															
	Interoffice Transport - Dedicated - 2 Wire Voice Grade - Facility Termination			UEPFB	U1TV2	23.95	98.09	53.67	56.31	22.42						
	Interoffice Transport - Dedicated - 2 Wire Voice Grade - Per Mile or Fraction Mile			UEPFB	1L5XX	0.0095										
	FEATURES															
	All Features Offered			UEPFB	UEPVF	0.00	0.00	0.00								
	NONRECURRING CHARGES (NRCs) - CURRENTLY COMBINED															
	2-Wire Loop / Dedicated IO Transport / 2 Wire Line Port Combination - Conversion - Switch-as-is			UEPFB	USAC2		9.03	1.87								
	2-Wire Loop / Dedicated IO Transport / 2 Wire Line Port Combination - Conversion - Switch with change			UEPFB	USACC		9.03	1.87								
	Unbundled Miscellaneous Rate Element, Tag Designed Loop at End User Premise			UEPFB	URETN		11.21	1.10								
	2-WIRE VOICE LOOP/ 2WIRE VOICE GRADE IO TRANSPORT/ 2-WIRE LINE PORT (PBX)															
	UNE Port/Loop Combination Rates															
	2-Wire VG Loop/IO Tranport/Port Combo - Zone 1		1			13.90										

UNBUNDLED NETWORK ELEMENTS - Kentucky														Attachment: 2		Exhibit: A	
CATEGORY		RATE ELEMENTS	Interim	Zone	BCS	USOC	RATES ($)					Svc Order Submitted Elec per LSR	Svc Order Submitted Manually per LSR	Incremental Charge - Manual Svc Order vs. Electronic-1st	Incremental Charge - Manual Svc Order vs. Electronic-Add'l	Incremental Charge - Manual Svc Order vs. Electronic-Disc 1st	Incremental Charge - Manual Svc Order vs. Electronic-Disc Add'l
							Rec	Nonrecurring		Nonrecurring Disconnect		OSS Rates ($)					
								First	Add'l	First	Add'l	SOMEC	SOMAN	SOMAN	SOMAN	SOMAN	SOMAN
		2-Wire VG Loop/IO Tranport/Port Combo - Zone 2		2			18.68										
		2-Wire VG Loop/IO Tranport/Port Combo - Zone 3		3			34.45										
	UNE Loop Rates																
		2-Wire Voice Grade Loop (SL2) - Zone 1		1	UEPFP	UECF2	12.67										
		2-Wire Voice Grade Loop (SL2) - Zone 2		2	UEPFP	UECF2	17.45										
		2-Wire Voice Grade Loop (SL2) - Zone 3		3	UEPFP	UECF2	33.22										
	2-Wire Voice Grade Line Port Rates (BUS - PBX)																
		Line Side Unbundled Combination 2-Way PBX Trunk Port - Bus			UEPFP	UEPPC	1.23	164.27	78.65	75.05	8.73						
		Line Side Unbundled Outward PBX Trunk Port - Bus			UEPFP	UEPPO	1.23	164.27	78.65	75.05	8.73						
		Line Side Unbundled Incoming PBX Trunk Port - Bus			UEPFP	UEPP1	1.23	164.27	78.65	75.05	8.73						
		2-Wire Voice Unbundled PBX LD Terminal Ports			UEPFP	UEPLD	1.23	164.27	78.65	75.05	8.73						
		2-Wire Voice Unbundled 2-Way Combination PBX Usage Port			UEPFP	UEPXA	1.23	164.27	78.65	75.05	8.73						
		2-Wire Voice Unbundled PBX Toll Terminal Hotel Ports			UEPFP	UEPXB	1.23	164.27	78.65	75.05	8.73						
		2-Wire Voice Unbundled PBX LD DDD Terminals Port			UEPFP	UEPXC	1.23	164.27	78.65	75.05	8.73						
		2-Wire Voice Unbundled PBX LD Terminal Switchboard Port			UEPFP	UEPXD	1.23	164.27	78.65	75.05	8.73						
		2-Wire Voice Unbundled PBX LD Terminal Switchboard IDD Capable Port			UEPFP	UEPXE	1.23	164.27	78.65	75.05	8.73						
		2-Wire Voice Unbundled 2-Way PBX Kentucky Room Area Calling Port without LUD			UEPFP	UEPXF	1.23	164.27	78.65	75.05	8.73						
		2-Wire Voice Unbundled PBX Kentucky LUD Area Calling Port			UEPFP	UEPXG	1.23	164.27	78.65	75.05	8.73						
		2-Wire Voice Unbundled PBX Kentucky Premium Calling Port			UEPFP	UEPXH	1.23	164.27	78.65	75.05	8.73						
		2-Wire Voice Unbundled 2-Way Kentucky Area Calling Port without LUD			UEPFP	UEPXJ	1.23	164.27	78.65	75.05	8.73						
		2-Wire Voice Unbundled 2-Way PBX Hotel/Hospital Economy Administrative Calling Port			UEPFP	UEPXL	1.23	164.27	78.65	75.05	8.73						
		2-Wire Voice Unbundled 2-Way PBX Hotel/Hospital Economy Room Calling Port			UEPFP	UEPXM	1.23	164.27	78.65	75.05	8.73						
		2-Wire Voice Unbundled 1-Way Outgoing PBX Hotel/Hospital Discount Room Calling Port			UEPFP	UEPXO	1.23	164.27	78.65	75.05	8.73						
		2-Wire Voice Unbundled 1-Way Outgoing PBX Measured Port			UEPFP	UEPXS	1.23	164.27	78.65	75.05	8.73						
	LOCAL NUMBER PORTABILITY																
		Local Number Portability (1 per port)			UEPFP	LNPCP	3.15	0.00	0.00								
	INTEROFFICE TRANSPORT																
		Interoffice Transport - Dedicated - 2 Wire Voice Grade - Facility Termination			UEPFP	U1TV2	23.95	98.09	53.67	56.31	22.42						
		Interoffice Transport - Dedicated - 2 Wire Voice Grade - Per Mile or Fraction Mile			UEPFP	1L5XX	0.0095										
	FEATURES																
		All Features Offered			UEPFP	UEPVF	0.00	0.00	0.00								
	NONRECURRING CHARGES (NRCs) - CURRENTLY COMBINED																
		2-Wire Loop / Dedicated IO Transport / 2 Wire Line Port Combination - Conversion - Switch-as-is			UEPFP	USAC2		9.03	1.87								
		2-Wire Loop / Dedicated IO Transport / 2 Wire Line Port Combination - Conversion - Switch with change			UEPFP	USACC		9.03	1.87								
		Unbundled Miscellaneous Rate Element, Tag Designed Loop at End User Premise			UEPFP	URETN		11.21	1.10								
UNBUNDLED PORT/LOOP COMBINATIONS - COST BASED RATES																	
	2-WIRE VOICE GRADE LOOP- BUS ONLY - WITH 2-WIRE DID TRUNK PORT																
	UNE Port/Loop Combination Rates																
		2-Wire VG Loop/2-Wire DID Trunk Port Combo - UNE Zone 1		1			21.30										
		2-Wire VG Loop/2-Wire DID Trunk Port Combo - UNE Zone 2		2			26.08										
		2-Wire VG Loop/2-Wire DID Trunk Port Combo - UNE Zone 3		3			41.85										
	UNE Loop Rates																
		2-Wire Analog Voice Grade Loop - (SL2) - UNE Zone 1		1	UEPPX	UECD1	12.67										
		2-Wire Analog Voice Grade Loop - (SL2) - UNE Zone 2		2	UEPPX	UECD1	17.45										
		2-Wire Analog Voice Grade Loop - (SL2) - UNE Zone 3		3	UEPPX	UECD1	33.22										
	UNE Port Rate																
		Exchange Ports - 2-Wire DID Port			UEPPX	UEPD1	8.63	336.11	27.75	132.37	9.31						

UNBUNDLED NETWORK ELEMENTS - Kentucky													Attachment: 2		Exhibit: A	
CATEGORY	RATE ELEMENTS	Interim	Zone	BCS	USOC	RATES ($)					Svc Order Submitted Elec per LSR	Svc Order Submitted Manually per LSR	Incremental Charge - Manual Svc Order vs. Electronic-1st	Incremental Charge - Manual Svc Order vs. Electronic-Add'l	Incremental Charge - Manual Svc Order vs. Electronic-Disc 1st	Incremental Charge - Manual Svc Order vs. Electronic-Disc Add'l
						Rec	Nonrecurring		Nonrecurring Disconnect		OSS Rates ($)					
							First	Add'l	First	Add'l	SOMEC	SOMAN	SOMAN	SOMAN	SOMAN	SOMAN
	NONRECURRING CHARGES - CURRENTLY COMBINED															
	2-Wire Voice Grade Loop / 2-Wire DID Trunk Port Conversion with BellSouth Allowable Changes			UEPPX	USA1C		7.85	1.87								
	ADDITIONAL NRCs															
	2-Wire DID Subsequent Activity - Add Trunks, Per Trunk			UEPPX	USAS1		32.25	32.25								
	Unbundled Miscellaneous Rate Element, Tag Designed Loop at End User Premise			UEPPX	URETN		11.21	1.10								
	Telephone Number/Trunk Group Establisment Charges															
	DID Trunk Termination (One Per Port)			UEPPX	NDT	0.00	0.00	0.00								
	Additional DID Numbers for each Group of 20 DID Numbers			UEPPX	ND4	0.00	0.00	0.00								
	DID Numbers, Non- consecutive DID Numbers , Per Number			UEPPX	ND5	0.00	0.00	0.00								
	Reserve Non-Consecutive DID numbers			UEPPX	ND6	0.00	0.00	0.00								
	Reserve DID Numbers			UEPPX	NDV	0.00	0.00	0.00								
	LOCAL NUMBER PORTABILITY															
	Local Number Portability (1 per port)			UEPPX	LNPCP	3.15	0.00	0.00								
	2-WIRE ISDN DIGITAL GRADE LOOP WITH 2-WIRE ISDN DIGITAL LINE SIDE PORT															
	UNE Port/Loop Combination Rates															
	2W ISDN Digital Grade Loop/2W ISDN Digital Line Side Port - UNE Zone 1		1	UEPPB UEPPR		25.69										
	2W ISDN Digital Grade Loop/2W ISDN Digital Line Side Port - UNE Zone 2		2	UEPPB UEPPR		31.92										
	2W ISDN Digital Grade Loop/2W ISDN Digital Line Side Port - UNE Zone 3		3	UEPPB UEPPR		50.21										
	UNE Loop Rates															
	2-Wire ISDN Digital Grade Loop - UNE Zone 1		1	UEPPB UEPPR	USL2X	16.10										
	2-Wire ISDN Digital Grade Loop - UNE Zone 2		2	UEPPB UEPPR	USL2X	22.33										
	2-Wire ISDN Digital Grade Loop - UNE Zone 3		3	UEPPB UEPPR	USL2X	40.63										
	UNE Port Rate															
	Exchange Port - 2-Wire ISDN Line Side Port			UEPPB UEPPR	UEPPB	9.59	320.53	289.13	92.19	17.56						
	NONRECURRING CHARGES - CURRENTLY COMBINED															
	2-Wire ISDN Digital Grade Loop / 2-Wire ISDN Line Side Port Combination - Conversion			UEPPB UEPPR	USACB	0.00	22.77	17.00								
	ADDITIONAL NRCs															
	Unbundled Miscellaneous Rate Element, Tag Designed Loop at End User Premise			UEPPB UEPPR	URETN		11.21	1.10								
	Unbundled Miscellaneous Rate Element, Tag Loop at End User Premise			UEPPB UEPPR	URETL		8.33	0.83								
	LOCAL NUMBER PORTABILITY															
	Local Number Portability (1 per port)			UEPPB UEPPR	LNPCX	0.35	0.00	0.00								
	B-CHANNEL USER PROFILE ACCESS:															
	CVS/CSD (DMS/5ESS)			UEPPB UEPPR	U1UCA	0.00	0.00	0.00								
	CVS (EWSD)			UEPPB UEPPR	U1UCB	0.00	0.00	0.00								
	CSD			UEPPB UEPPR	U1UCC	0.00	0.00	0.00								
	B-CHANNEL AREA PLUS USER PROFILE ACCESS: (AL,KY,LA,MS SC,MS, & TN)															
	CVS/CSD (DMS/5ESS)			UEPPB UEPPR	U1UCD	0.00	0.00	0.00								
	CVS (EWSD)			UEPPB UEPPR	U1UCE	0.00	0.00	0.00								
	CSD			UEPPB UEPPR	U1UCF	0.00	0.00	0.00								
	USER TERMINAL PROFILE															
	User Terminal Profile (EWSD only)			UEPPB UEPPR	U1UMA	0.00	0.00	0.00								
	VERTICAL FEATURES															
	All Vertical Features - One per Channel B User Profile			UEPPB UEPPR	UEPVF	0.00	0.00	0.00								
	INTEROFFICE CHANNEL MILEAGE															
	Interoffice Channel mileage each, including first mile and facilities termination			UEPPB UEPPR	M1GNC	29.12	47.34	31.78	22.77	8.75						
	Interoffice Channel mileage each, additional mile			UEPPB UEPPR	M1GNM	0.01	0.00	0.00								
	4-WIRE DS1 DIGITAL LOOP WITH 4-WIRE ISDN DS1 DIGITAL TRUNK PORT															
	The UNE-P DS1 combination rates below for in this rate exhibit apply to the embedded base in place as of 10/2/03 until 4/1/04. After 4/1/04 these rates shall revert to tariff rates or a separate commercial agreement.															
	Requests for 4-Wire DS1 Digital Loop with 4-Wire ISDN DS1 Digital Trunk Port after the effective date of this amendment shall be provided pursuant to a separate agreement or tariff at BellSouth's discretion.															

UNBUNDLED NETWORK ELEMENTS - Kentucky													Attachment: 2		Exhibit: A	
CATEGORY	RATE ELEMENTS	Interim	Zone	BCS	USOC	RATES ($)					Svc Order Submitted Elec per LSR	Svc Order Submitted Manually per LSR	Incremental Charge - Manual Svc Order vs. Electronic-1st	Incremental Charge - Manual Svc Order vs. Electronic-Add'l	Incremental Charge - Manual Svc Order vs. Electronic-Disc 1st	Incremental Charge - Manual Svc Order vs. Electronic-Disc Add'l
						Rec	Nonrecurring		Nonrecurring Disconnect		OSS Rates ($)					
							First	Add'l	First	Add'l	SOMEC	SOMAN	SOMAN	SOMAN	SOMAN	SOMAN
	UNE Port/Loop Combination Rates															
	4W DS1 Digital Loop/4W ISDN DS1 Digital Trunk Port - UNE Zone 1		1	UEPPP		170.06										
	4W DS1 Digital Loop/4W ISDN DS1 Digital Trunk Port - UNE Zone 2		2	UEPPP		197.70										
	4W DS1 Digital Loop/4W ISDN DS1 Digital Trunk Port - UNE Zone 3		3	UEPPP		381.35										
	UNE Loop Rates															
	4-Wire DS1 Digital Loop - UNE Zone 1		1	UEPPP	USL4P	86.47										
	4-Wire DS1 Digital Loop - UNE Zone 2		2	UEPPP	USL4P	114.10										
	4-Wire DS1 Digital Loop - UNE Zone 3		3	UEPPP	USL4P	297.76										
	UNE Port Rate															
	Exchange Ports - 4-Wire ISDN DS1 Port (E:4/1/2004)			UEPPP	UEPPP	83.59	736.16	382.74	159.48	48.82						
	NONRECURRING CHARGES - CURRENTLY COMBINED															
	4-Wire DS1 Digital Loop / 4-Wire ISDN DS1 Digital Trunk Port Combination - Conversion -Switch-as-is (E:4/1/2004)			UEPPP	USACP	0.00	81.70	61.37								
	ADDITIONAL NRCs															
	4-Wire DS1 Loop/4-W ISDN Digtl Trk Port - Subsqt Actvy-Inward/two way Tel Nos. (except NC)			UEPPP	PR7TF		0.54									
	4-Wire DS1 Loop / 4-Wire ISDN DS1 Digital Trunk Port - Outward Tel Numbers (All States except NC)			UEPPP	PR7TO		12.71	12.71								
	4-Wire DS1 Loop / 4-Wire ISDN DS1 Digital Trk Port - Subsequent Inward Tel Numbers			UEPPP	PR7ZT		25.41	25.41								
	LOCAL NUMBER PORTABILITY															
	Local Number Portability (1 per port)			UEPPP	LNPCN	1.75										
	INTERFACE (Provsioning Only)															
	Voice/Data			UEPPP	PR71V	0.00	0.00	0.00								
	Digital Data			UEPPP	PR71D	0.00	0.00	0.00								
	Inward Data			UEPPP	PR71E	0.00	0.00	0.00								
	New or Additional "B" Channel															
	New or Additional - Voice/Data B Channel			UEPPP	PR7BV	0.00	15.48									
	New or Additional - Digital Data B Channel			UEPPP	PR7BF	0.00	15.48									
	New or Additional Inward Data B Channel			UEPPP	PR7BD	0.00	15.48									
	CALL TYPES															
	Inward			UEPPP	PR7C1	0.00	0.00	0.00								
	Outward			UEPPP	PR7CO	0.00	0.00	0.00								
	Two-way			UEPPP	PR7CC	0.00	0.00	0.00								
	Interoffice Channel Mileage															
	Fixed Each Including First Mile			UEPPP	1LN1A	96.27	105.52	98.46	23.09	20.49						
	Each Airline-Fractional Additional Mile			UEPPP	1LN1B	0.23										
	4-WIRE DS1 DIGITAL LOOP WITH 4-WIRE DDITS TRUNK PORT															
	The UNE-P DS1 combination rates below for in this rate exhibit apply to the embedded base in place as of 10/2/03 until 4/1/04. After 4/1/04 these rates shall revert to tariff rates or a separate commercial agreement.															
	Requests for 4-Wire DS1 Digital Loop with 4-Wire DDITS after the effective date of this amendment shall be provided pursuant to a separate agreement or tariff at BellSouth's discretion.															
	UNE Port/Loop Combination Rates															
	4W DS1 Digital Loop/4W DDITS Trunk Port - UNE Zone 1		1	UEPDC		147.99										
	4W DS1 Digital Loop/4W DDITS Trunk Port - UNE Zone 2		2	UEPDC		175.62										
	4W DS1 Digital Loop/4W DDITS Trunk Port - UNE Zone 3		3	UEPDC		359.28										
	UNE Loop Rates															
	4-Wire DS1 Digital Loop - UNE Zone 1		1	UEPDC	USLDC	86.47										
	4-Wire DS1 Digital Loop - UNE Zone 2		2	UEPDC	USLDC	114.10										
	4-Wire DS1 Digital Loop - UNE Zone 3		3	UEPDC	USLDC	297.76										
	UNE Port Rate															
	4-Wire DDITS Digital Trunk Port (E:4/1/2004)			UEPDC	UDD1T	61.52	780.61	375.52	176.19	16.98						
	NONRECURRING CHARGES - CURRENTLY COMBINED															
	4-Wire DS1 Digital Loop / 4-Wire DDITS Trunk Port Combination - Switch-as-is (E:4/1/2004)			UEPDC	USAC4		92.84	46.70								
	4-Wire DS1 Digital Loop / 4-Wire DDITS Trunk Port Combination - Conversion with DS1 Changes (E:4/1/2004)			UEPDC	USAWA		92.84	46.70								

UNBUNDLED NETWORK ELEMENTS - Kentucky													Attachment: 2		Exhibit: A	
CATEGORY	RATE ELEMENTS	Interim	Zone	BCS	USOC	RATES ($)					Svc Order Submitted Elec per LSR	Svc Order Submitted Manually per LSR	Incremental Charge - Manual Svc Order vs. Electronic-1st	Incremental Charge - Manual Svc Order vs. Electronic-Add'l	Incremental Charge - Manual Svc Order vs. Electronic-Disc 1st	Incremental Charge - Manual Svc Order vs. Electronic-Disc Add'l
						Rec	Nonrecurring		Nonrecurring Disconnect		OSS Rates ($)					
							First	Add'l	First	Add'l	SOMEC	SOMAN	SOMAN	SOMAN	SOMAN	SOMAN
	4-Wire DS1 Digital Loop / 4-Wire DDITS Trunk Port Combination - Conversion with Change - Trunk (E:4/1/2004)			UEPDC	USAWB		92.84	46.70								
ADDITIONAL NRCs																
	4-Wire DS1 Loop / 4-Wire DDITS Trunk Port - NRC - Subsequent Channel Activation/Chan - 2-Way Trunk			UEPDC	UDTTA		15.09	15.09								
	4-Wire DS1 Loop / 4-Wire DDITS Trunk Port - Subsequent Channel Activation/Chan - 1-Way Outward Trunk			UEPDC	UDTTB		15.09	15.09								
	4-Wire DS1 Loop / 4-Wire DDITS Trunk Port - Subsqnt Channel Activation/Chan Inward Trunk w/out DID			UEPDC	UDTTC		15.09	15.09								
	4-Wire DS1 Loop / 4-Wire DDITS Trunk Port - Subsqnt Chan Activation Per Chan - Inward Trunk with DID			UEPDC	UDTTD		15.09	15.09								
	4-Wire DS1 Loop / 4-Wire DDITS Trunk Port - Subsqnt Chan Activation / Chan - 2-Way DID w User Trans			UEPDC	UDTTE		15.09	15.09								
BIPOLAR 8 ZERO SUBSTITUTION																
	B8ZS -Superframe Format			UEPDC	CCOSF		0.00i	730.00s								
	B8ZS - Extended Superframe Format			UEPDC	CCOEF		0.00i	730.00s								
Alternate Mark Inversion																
	AMI -Superframe Format			UEPDC	MCOSF		0.00	0.00								
	AMI - Extended SuperFrame Format			UEPDC	MCOPO		0.00	0.00								
Telephone Number/Trunk Group Establisment Charges																
	Telephone Number for 2-Way Trunk Group			UEPDC	UDTGX	0.00	0.00	0.00								
	Telephone Number for 1-Way Outward Trunk Group			UEPDC	UDTGY	0.00		0.00								
	Telephone Number for 1-Way Inward Trunk Group Without DID			UEPDC	UDTGZ	0.00	0.00	0.00								
	DID Numbers for each Group of 20 DID Numbers			UEPDC	ND4	0.00	0.00	0.00								
	DID Numbers, Non- consecutive DID Numbers , Per Number			UEPDC	ND5	0.00	0.00	0.00								
	Reserve Non-Consecutive DID Nos.			UEPDC	ND6	0.00	0.00	0.00								
	Reserve DID Numbers			UEPDC	NDV	0.00	0.00	0.00								
Dedicated DS1 (Interoffice Channel Mileage) - FX/FCO for 4-Wire DS1 Digital Loop with 4-Wire DDITS Trunk Port																
	Interoffice Channel Mileage - Fixed rate 0-8 miles (Facilities Termination)			UEPDC	1LNO1	96.04	105.52	98.46	23.09	20.49						
	Interoffice Channel Mileage - Additional rate per mile - 0-8 miles			UEPDC	1LNOA	0.23	0.00	0.00								
	Interoffice Channel Mileage - Fixed rate 9-25 miles (Facilities Termination)			UEPDC	1LNO2	0.00	0.00	0.00								
	Interoffice Channel Mileage - Additional rate per mile - 9-25 miles			UEPDC	1LNOB	0.45	0.00	0.00								
	Interoffice Channel Mileage - Fixed rate 25+ miles (Facilities Termination)			UEPDC	1LNO3	0.00	0.00	0.00								
	Interoffice Channel Mileage - Additional rate per mile - 25+ miles			UEPDC	1LNOC	0.45	0.00	0.00								
	Local Number Portability, per DS0 Activated			UEPDC	LNPCP	3.15	0.00	0.00								
	Central Office Termininating Point			UEPDC	CTG	0.00										
4-WIRE DS1 LOOP WITH CHANNELIZATION WITH PORT																
System is 1 DS1 Loop, 1 D4 Channel Bank, and up to 24 Feature Activations																
Each System can have up to 24 combinations of rates depending on type and number of ports used																
The UNE-P DS1 combination rates below for 4-Wire DS1 Loop with Channelization with Port in this rate exhibit apply to the embedded base in place as of 10/2/03 until 4/1/04. After 4/1/04 these rates shall revert to tariff rates or a separate agreement.																
Requests for 4-Wire DS1 Loop with Channelization with Port after the effective date of this amendment shall be provided pursuant to a separate agreement or tariff at BellSouth's discretion.																
UNE DS1 Loop																
	4-Wire DS1 Loop - UNE Zone 1		1	UEPMG	USLDC	86.47	0.00	0.00								
	4-Wire DS1 Loop - UNE Zone 2		2	UEPMG	USLDC	114.10	0.00	0.00								
	4-Wire DS1 Loop - UNE Zone 3		3	UEPMG	USLDC	297.76	0.00	0.00								
UNE DSO Channelization Capacities (D4 Channel Bank Configurations)																
	24 DSO Channel Capacity - 1 per DS1			UEPMG	VUM24	111.16	0.00	0.00								
	48 DSO Channel Capacity - 1 per 2 DS1s			UEPMG	VUM48	222.32	0.00	0.00								
	96 DSO Channel Capacity -1per 4 DS1s			UEPMG	VUM96	444.64	0.00	0.00								
	144 DS0 Channel Capacity - 1 per 6 DS1s			UEPMG	VUM14	666.96	0.00	0.00								
	192 DS0 Channel Capacity -1 per 8 DS1s			UEPMG	VUM19	889.28	0.00	0.00								
	240 DS0 Channel Capacity - 1 per 10 DS1s			UEPMG	VUM2O	1,111.60	0.00	0.00								
	288 DS0 Channel Capacity - 1 per 12 DS1s			UEPMG	VUM28	1,333.92	0.00	0.00								

UNBUNDLED NETWORK ELEMENTS - Kentucky													Attachment: 2		Exhibit: A	
CATEGORY	RATE ELEMENTS	Interim	Zone	BCS	USOC	RATES ($)					Svc Order Submitted Elec per LSR	Svc Order Submitted Manually per LSR	Incremental Charge - Manual Svc Order vs. Electronic-1st	Incremental Charge - Manual Svc Order vs. Electronic-Add'l	Incremental Charge - Manual Svc Order vs. Electronic-Disc 1st	Incremental Charge - Manual Svc Order vs. Electronic-Disc Add'l
						Rec	Nonrecurring		Nonrecurring Disconnect		OSS Rates ($)					
							First	Add'l	First	Add'l	SOMEC	SOMAN	SOMAN	SOMAN	SOMAN	SOMAN
	384 DS0 Channel Capacity - 1 per 16 DS1s			UEPMG	VUM38	1,778.56	0.00	0.00								
	480 DS0 Channel Capacity - 1 per 20 DS1s			UEPMG	VUM4O	2,223.20	0.00	0.00								
	576 DS0 Channel Capacity -1 per 24 DS1s			UEPMG	VUM57	2,667.84	0.00	0.00								
	672 DS0 Channel Capacity - 1 per 28 DS1s			UEPMG	VUM67	3,112.48	0.00	0.00								
Non-Recurring Charges (NRC) Associated with 4-Wire DS1 Loop with Channeliztion with Port - Conversion Charge Based on a System																
A Minimum System configuration is One (1) DS1, One (1) D4 Channel Bank, and Up To 24 DSO Ports with Feature Activations.																
Multiples of this configuration functioning as one are considered Add'l after the minimum system configuration is counted.																
	NRC - Conversion (Currently Combined) with or without BellSouth Allowed Changes			UEPMG	USAC4	0.00	94.30	4.24								
System Additions at End User Locations Where 4-Wire DS1 Loop with Channelization with Port Combination Currently Exists and																
New (Not Currently Combined) in all states, except in Density Zone 1 of Top 8 MSA's																
	1 DS1/D4 Channel Bank - Additionally Add NRC for each Port and Assoc Fea Activation (E:4/1/2004)			UEPMG	VUMD4	0.00	718.89	469.86	149.83	17.77						
Bipolar 8 Zero Substitution																
	Clear Channel Capability Format, superframe - Subsequent Activity Only			UEPMG	CCOSF	0.00	0.00i	730.00s								
	Clear Channel Capability Format - Extended Superframe - Subsequent Activity Only			UEPMG	CCOEF	0.00	0.00i	730.00s								
Alternate Mark Inversion (AMI)																
	Superframe Format			UEPMG	MCOSF	0.00	0.00	0.00								
	Extended Superframe Format			UEPMG	MCOPO	0.00	0.00	0.00								
Exchange Ports Associated with 4-Wire DS1 Loop with Channelization with Port																
Exchange Ports																
	Line Side Combination Channelized PBX Trunk Port - Business (E:4/1/2004)			UEPPX	UEPCX	1.15	0.00	0.00	0.00	0.00						
	Line Side Outward Channelized PBX Trunk Port - Business (E:4/1/2004)			UEPPX	UEPOX	1.15	0.00	0.00	0.00	0.00						
	Line Side Inward Only Channelized PBX Trunk Port without DID (E:4/1/2004)			UEPPX	UEP1X	1.15	0.00	0.00	0.00	0.00						
	2-Wire Trunk Side Unbundled Channelized DID Trunk Port (E:4/1/2004)			UEPPX	UEPDM	8.65	0.00	0.00	0.00	0.00						
	Unbundled Exchange Ports, 2-Wire Channelized – Outdial – (AL, KY, LA, MS, & TN)(Conversion from Network Access Service) (E:4/1/2004)			UEPPX	UEPCY	1.15	0.00	0.00	0.00	0.00						
	Unbundled Exchange Ports, 2-Wire Channelized – Combination (AL, KY, LA, MS, & TN) (Conversion from Network Access Service) (E:4/1/2004)			UEPPX	UEPCT	1.15	0.00	0.00	0.00	0.00						
	Unbundled Exchange Ports, 2-Wire Channelized – Outdial – Kentucky Only – Calling Plan (E:4/1/2004)			UEPPX	UEPCV	1.15	0.00	0.00	0.00	0.00						
	Unbundled Exchange Ports, 2-Wire Channelized – Two Way - Kentucky Only – Calling Plan (E:4/1/2004)			UEPPX	UEPCW	1.15	0.00	0.00	0.00	0.00						
Feature Activations - Unbundled Loop Concentration																
	Feature (Service) Activation for each Line Port Terminated in D4 Bank			UEPPX	1PQWM	0.62	25.40	13.41	4.17	4.15						
	Feature (Service) Activation for each Trunk Port Terminated in D4 Bank			UEPPX	1PQWU	0.62	78.15	19.68	59.05	11.54						
Telephone Number/ Group Establishment Charges for DID Service																
	DID Trunk Termination (1 per Port)			UEPPX	NDT	0.00	0.00	0.00								
	DID Numbers - groups of 20 - Valid all States			UEPPX	ND4	0.00	0.00	0.00								
	Non-Consecutive DID Numbers - per number			UEPPX	ND5	0.00	0.00	0.00								
	Reserve Non-Consecutive DID Numbers			UEPPX	ND6	0.00	0.00	0.00								
	Reserve DID Numbers			UEPPX	NDV	0.00	0.00	0.00								
Local Number Portability																
	Local Number Portability - 1 per port			UEPPX	LNPCP	3.15	0.00	0.00								
FEATURES - Vertical and Optional																
Local Switching Features Offered with Line Side Ports Only																
	All Features Available			UEPPX	UEPVF	0.00	0.00	0.00								
UNBUNDLED CENTREX PORT/LOOP COMBINATIONS - COST BASED RATES																
1. Cost Based Rates are applied where BellSouth is required by FCC and/or State Commission rule to provide Unbundled Local Switching or Switch Ports.																

CATEGORY	RATE ELEMENTS	Interim	Zone	BCS	USOC	RATES ($) Rec	Nonrecurring First	Nonrecurring Add'l	Nonrecurring Disconnect First	Nonrecurring Disconnect Add'l	Svc Order Submitted Elec per LSR	Svc Order Submitted Manually per LSR	Incremental Charge - Manual Svc Order vs. Electronic- 1st	Incremental Charge - Manual Svc Order vs. Electronic- Add'l	Incremental Charge - Manual Svc Order vs. Electronic- Disc 1st	Incremental Charge - Manual Svc Order vs. Electronic- Disc Add'l
											OSS Rates ($)					
											SOMEC	SOMAN	SOMAN	SOMAN	SOMAN	SOMAN
	2. Features shall apply to the Unbundled Port/Loop Combination - Cost Based Rate section in the same manner as they are applied to the Stand-Alone Unbundled Port section of this Rate Exhibit.															
	3. End Office and Tandem Switching Usage and Common Transport Usage rates in the Port section of this rate exhibit shall apply to all combinations of loop/port network elements except for UNE Coin Port/Loop Combinations.															
	4. The first and additional Port nonrecurring charges apply to Not Currently Combined Combos. For Currently Combined Combos, the nonrecurring charges shall be those identified in the Nonrecurring - Currently Combined sections. Additional NRCs may apply also and are categorized accordingly.															
	5. Market Rates for Unbundled Centrex Port/Loop Combination will be negotiated on an Individual Case Basis, until further notice.															
	UNE-P CENTREX - 1AESS - (Valid in AL,FL,GA,KY,LA,MS,&TN only)															
	2-Wire VG Loop/2-Wire Voice Grade Port (Centrex) Combo															
	UNE Port/Loop Combination Rates (Non-Design)															
	2-Wire VG Loop/2-Wire Voice Grade Port (Centrex) Port Combo - Non-Design		1	UEP91		10.79										
	2-Wire VG Loop/2-Wire Voice Grade Port (Centrex)Port Combo - Non-Design		2	UEP91		15.52										
	2-Wire VG Loop/2-Wire Voice Grade Port (Centrex)Port Combo - Non-Design		3	UEP91		31.74										
	UNE Port/Loop Combination Rates (Design)															
	2-Wire VG Loop/2-Wire Voice Grade Port (Centrex) Port Combo - Design		1	UEP91		13.82										
	2-Wire VG Loop/2-Wire Voice Grade Port (Centrex)Port Combo - Design		2	UEP91		18.60										
	2-Wire VG Loop/2-Wire Voice Grade Port (Centrex)Port Combo - Design		3	UEP91		34.37										
	UNE Loop Rate															
	2-Wire Voice Grade Loop (SL 1) - Zone 1		1	UEP91	UECS1	9.64										
	2-Wire Voice Grade Loop (SL 1) - Zone 2		2	UEP91	UECS1	14.37										
	2-Wire Voice Grade Loop (SL 1) - Zone 3		3	UEP91	UECS1	30.59										
	2-Wire Voice Grade Loop (SL 2) - Zone 1		1	UEP91	UECS2	12.67										
	2-Wire Voice Grade Loop (SL 2) - Zone 2		2	UEP91	UECS2	17.45										
	2-Wire Voice Grade Loop (SL 2) - Zone 3		3	UEP91	UECS2	33.22										
	UNE Ports															
	All States (Except North Carolina and Sout Carolina)															
	2-Wire Voice Grade Port (Centrex) Basic Local Area			UEP91	UEPYA	1.15	21.29	15.49	2.85	2.67						
	2-Wire Voice Grade Port (Centrex 800 termination)Basic Local Area			UEP91	UEPYB	1.15	21.29	15.49	2.85	2.67						
	2-Wire Voice Grade Port (Centrex with Caller ID)Note1 Basic Local Area			UEP91	UEPYH	1.15	21.29	15.49	2.85	2.67						
	2-Wire Voice Grade Port (Centrex from diff Serving Wire Center) Note 2, 3 Basic Local Area			UEP91	UEPYM	1.15	21.29	15.49	2.85	2.67						
	2-Wire Voice Grade Port, Diff Serving Wire Center - 800 Service Term - Basic Local Area			UEP91	UEPYZ	1.15	21.29	15.49	2.85	2.67						
	2-Wire Voice Grade Port terminated in on Megalink or equivalent - Basic Local Area			UEP91	UEPY9	1.15	21.29	15.49	2.85	2.67						
	2-Wire Voice Grade Port Terminated on 800 Service Term - Basic Local Area			UEP91	UEPY2	1.15	21.29	15.49	2.85	2.67						
	AL, KY, LA, MS, & TN Only															
	2-Wire Voice Grade Port (Centrex)			UEP91	UEPQA	1.15	21.29	15.49	2.85	2.67						
	2-Wire Voice Grade Port (Centrex 800 termination)			UEP91	UEPQB	1.15	21.29	15.49	2.85	2.67						
	2-Wire Voice Grade Port (Centrex with Caller ID)1			UEP91	UEPQH	1.15	21.29	15.49	2.85	2.67						
	2-Wire Voice Grade Port (Centrex from diff Serving Wire Center)2,3			UEP91	UEPQM	1.15	21.29	15.49	2.85	2.67						
	2-Wire Voice Grade Port, Diff Serving Wire Center - 2,3 - 800 Service Term			UEP91	UEPQZ	1.15	21.29	15.49	2.85	2.67						
	2-Wire Voice Grade Port terminated in on Megalink or equivalent			UEP91	UEPQ9	1.15	21.29	15.49	2.85	2.67						
	2-Wire Voice Grade Port Terminated on 800 Service Term			UEP91	UEPQ2	1.15	21.29	15.49	2.85	2.67						
	Local Switching															
	Centrex Intercom Funtionality, per port			UEP91	URECS	0.8873										
	Local Number Portability															
	Local Number Portability (1 per port)			UEP91	LNPCC	0.35										
	Features															

UNBUNDLED NETWORK ELEMENTS - Kentucky														Attachment: 2		Exhibit: A	
CATEGORY		RATE ELEMENTS	Interim	Zone	BCS	USOC	RATES ($)					Svc Order Submitted Elec per LSR	Svc Order Submitted Manually per LSR	Incremental Charge - Manual Svc Order vs. Electronic-1st	Incremental Charge - Manual Svc Order vs. Electronic-Add'l	Incremental Charge - Manual Svc Order vs. Electronic-Disc 1st	Incremental Charge - Manual Svc Order vs. Electronic-Disc Add'l
							Rec	Nonrecurring		Nonrecurring Disconnect		OSS Rates ($)					
								First	Add'l	First	Add'l	SOMEC	SOMAN	SOMAN	SOMAN	SOMAN	SOMAN
		All Standard Features Offered, per port			UEP91	UEPVF	0.00										
		All Select Features Offered, per port			UEP91	UEPVS	0.00	405.66									
		All Centrex Control Features Offered, per port			UEP91	UEPVC	0.00										
	NARS																
		Unbundled Network Access Register - Combination			UEP91	UARCX	0.00	0.00	0.00	0.00	0.00						
		Unbundled Network Access Register - Indial			UEP91	UAR1X	0.00	0.00	0.00	0.00	0.00						
		Unbundled Network Access Register - Outdial			UEP91	UAROX	0.00	0.00	0.00	0.00	0.00						
	Miscellaneous Terminations																
	2-Wire Trunk Side																
		Trunk Side Terminations, each			UEP91	CENA6	10.51	92.18	15.82	52.16	5.30						
	Interoffice Channel Mileage - 2-Wire																
		Interoffice Channel Facilities Termination - Voice Grade			UEP91	M1GBC	29.11										
		Interoffice Channel mileage, per mile or fraction of mile			UEP91	M1GBM	0.01										
	Feature Activations (DS0) Centrex Loops on Channelized DS1 Service																
	D4 Channel Bank Feature Activations																
		Feature Activation on D-4 Channel Bank Centrex Loop Slot			UEP91	1PQWS	0.62										
		Feature Activation on D-4 Channel Bank FX line Side Loop Slot			UEP91	1PQW6	0.62										
		Feature Activation on D-4 Channel Bank FX Trunk Side Loop Slot			UEP91	1PQW7	0.62										
		Feature Activation on D-4 Channel Bank Centrex Loop Slot - Different Wire Center			UEP91	1PQWP	0.62										
		Feature Activation on D-4 Channel Bank Private Line Loop Slot			UEP91	1PQWV	0.62										
		Feature Activation on D-4 Channel Bank Tjie Line/Trunk Loop Slot			UEP91	1PQWQ	0.62										
		Feature Activation on D-4 Channel Bank WATS Loop Slot			UEP91	1PQWA	0.62										
	Non-Recurring Charges (NRC) Associated with UNE-P Centrex																
		Conversion - Currently Combined Switch-As-Is with allowed changes, per port			UEP91	USAC2		0.102	0.102								
		Conversion of Existing Centrex Common Block			UEP91	USACN		18.95	8.32								
		New Centrex Standard Common Block			UEP91	M1ACS	0.00	669.80	78.32	111.05	13.27						
		New Centrex Customized Common Block			UEP91	M1ACC	0.00	669.80	78.32	111.05	13.27						
		Secondary Block, per Block			UEP91	M2CC1	0.00	78.32	78.32	13.27	13.27						
		NAR Establishment Charge, Per Occasion			UEP91	URECA	0.00	72.75									
	Additional Non-Recurring Charges (NRC)																
		Unbundled Miscellaneous Rate Element, Tag Loop at End Use Premise			UEP91	URETL		8.33	0.83								
		Unbundled Miscellaneous Rate Element, Tag Design Loop at End Use Premise			UEP91	URETN		11.21	1.10								
	UNE-P CENTREX - 5ESS (Valid in All States)																
	2-Wire VG Loop/2-Wire Voice Grade Port (Centrex) Combo																
	UNE Port/Loop Combination Rates (Non-Design)																
		2-Wire VG Loop/2-Wire Voice Grade Port (Centrex) Port Combo - Non-Design		1	UEP95		10.79										
		2-Wire VG Loop/2-Wire Voice Grade Port (Centrex)Port Combo - Non-Design		2	UEP95		15.52										
		2-Wire VG Loop/2-Wire Voice Grade Port (Centrex)Port Combo - Non-Design		3	UEP95		31.74										
	UNE Port/Loop Combination Rates (Design)																
		2-Wire VG Loop/2-Wire Voice Grade Port (Centrex) Port Combo - Design		1	UEP95		13.82										
		2-Wire VG Loop/2-Wire Voice Grade Port (Centrex)Port Combo - Design		2	UEP95		18.60										
		2-Wire VG Loop/2-Wire Voice Grade Port (Centrex)Port Combo - Design		3	UEP95		34.37										
	UNE Loop Rate																
		2-Wire Voice Grade Loop (SL 1) - Zone 1		1	UEP95	UECS1	9.64										
		2-Wire Voice Grade Loop (SL 1) - Zone 2		2	UEP95	UECS1	14.37										

UNBUNDLED NETWORK ELEMENTS - Kentucky														Attachment: 2		Exhibit: A	
CATEGORY		RATE ELEMENTS	Interim	Zone	BCS	USOC	RATES ($)					Svc Order Submitted Elec per LSR	Svc Order Submitted Manually per LSR	Incremental Charge - Manual Svc Order vs. Electronic-1st	Incremental Charge - Manual Svc Order vs. Electronic-Add'l	Incremental Charge - Manual Svc Order vs. Electronic-Disc 1st	Incremental Charge - Manual Svc Order vs. Electronic-Disc Add'l
							Rec	Nonrecurring		Nonrecurring Disconnect		OSS Rates ($)					
								First	Add'l	First	Add'l	SOMEC	SOMAN	SOMAN	SOMAN	SOMAN	SOMAN
		2-Wire Voice Grade Loop (SL 1) - Zone 3		3	UEP95	UECS1	30.59										
		2-Wire Voice Grade Loop (SL 2) - Zone 1		1	UEP95	UECS2	12.67										
		2-Wire Voice Grade Loop (SL 2) - Zone 2		2	UEP95	UECS2	17.45										
		2-Wire Voice Grade Loop (SL 2) - Zone 3		3	UEP95	UECS2	33.22										
	UNE Port Rate																
	All States																
		2-Wire Voice Grade Port (Centrex) Basic Local Area			UEP95	UEPYA	1.15	21.29	15.49	2.85	2.67						
		2-Wire Voice Grade Port (Centrex 800 termination)			UEP95	UEPYB	1.15	21.29	15.49	2.85	2.67						
		2-Wire Voice Grade Port (Centrex with Caller ID)1Basic Local Area			UEP95	UEPYH	1.15	21.29	15.49	2.85	2.67						
		2-Wire Voice Grade Port (Centrex from diff Serving Wire Center)2,3 Basic Local Area			UEP95	UEPYM	1.15	21.29	15.49	2.85	2.67						
		2-Wire Voice Grade Port, Diff Serving Wire Center 2,3 - 800 Service Term - Basic Local Area			UEP95	UEPYZ	1.15	21.29	15.49	2.85	2.67						
		2-Wire Voice Grade Port terminated in on Megalink or equivalent - Basic Local Area			UEP95	UEPY9	1.15	21.29	15.49	2.85	2.67						
		2-Wire Voice Grade Port Terminated on 800 Service Term - Basic Local Area			UEP95	UEPY2	1.15	21.29	15.49	2.85	2.67						
	AL, KY, LA, MS, SC, & TN Only																
		2-Wire Voice Grade Port (Centrex)			UEP95	UEPQA	1.15	21.29	15.49	2.85	2.67						
		2-Wire Voice Grade Port (Centrex 800 termination)			UEP95	UEPQB	1.15	21.29	15.49	2.85	2.67						
		2-Wire Voice Grade Port (Centrex with Caller ID)1			UEP95	UEPQH	1.15	21.29	15.49	2.85	2.67						
		2-Wire Voice Grade Port (Centrex from diff Serving Wire Center)2,3			UEP95	UEPQM	1.15	21.29	15.49	2.85	2.67						
		2-Wire Voice Grade Port, Diff Serving Wire Center - 800 Service Term 2,3			UEP95	UEPQZ	1.15	21.29	15.49	2.85	2.67						
		2-Wire Voice Grade Port terminated in on Megalink or equivalent			UEP95	UEPQ9	1.15	21.29	15.49	2.85	2.67						
		2-Wire Voice Grade Port Terminated on 800 Service Term			UEP95	UEPQ2	1.15	21.29	15.49	2.85	2.67						
	Local Switching																
		Centrex Intercom Funtionality, per port			UEP95	URECS	0.8873										
	Local Number Portability																
		Local Number Portability (1 per port)			UEP95	LNPCC	0.35										
	Features																
		All Standard Features Offered, per port			UEP95	UEPVF	0.00										
		All Select Features Offered, per port			UEP95	UEPVS	0.00	405.66									
		All Centrex Control Features Offered, per port			UEP95	UEPVC	0.00										
	NARS																
		Unbundled Network Access Register - Combination			UEP95	UARCX	0.00	0.00	0.00	0.00	0.00						
		Unbundled Network Access Register - Indial			UEP95	UAR1X	0.00	0.00	0.00	0.00	0.00						
		Unbundled Network Access Register - Outdial			UEP95	UAROX	0.00	0.00	0.00	0.00	0.00						
	Miscellaneous Terminations																
	2-Wire Trunk Side																
		Trunk Side Terminations, each			UEP95	CEND6	10.51	92.18	15.82	52.16	5.30						
	4-Wire Digital (1.544 Megabits)																
		DS1 Circuit Terminations, each			UEP95	M1HD1	74.77	164.86	77.74	60.69	3.86						
		DS0 Channels Activated, each			UEP95	M1HDO	0.00	15.09									
	Interoffice Channel Mileage - 2-Wire																
		Interoffice Channel Facilities Termination			UEP95	M1GBC	29.11										
		Interoffice Channel mileage, per mile or fraction of mile			UEP95	M1GBM	0.01										
	Feature Activations (DS0) Centrex Loops on Channelized DS1 Service																
	D4 Channel Bank Feature Activations																
		Feature Activation on D-4 Channel Bank Centrex Loop Slot			UEP95	1PQWS	0.62										
		Feature Activation on D-4 Channel Bank FX line Side Loop Slot			UEP95	1PQW6	0.62										
		Feature Activation on D-4 Channel Bank FX Trunk Side Loop Slot			UEP95	1PQW7	0.62										
		Feature Activation on D-4 Channel Bank Centrex Loop Slot - Different Wire Center			UEP95	1PQWP	0.62										

UNBUNDLED NETWORK ELEMENTS - Kentucky														Attachment: 2		Exhibit: A	
CATEGORY		RATE ELEMENTS	Interim	Zone	BCS	USOC	RATES ($)					Svc Order Submitted Elec per LSR	Svc Order Submitted Manually per LSR	Incremental Charge - Manual Svc Order vs. Electronic-1st	Incremental Charge - Manual Svc Order vs. Electronic-Add'l	Incremental Charge - Manual Svc Order vs. Electronic-Disc 1st	Incremental Charge - Manual Svc Order vs. Electronic-Disc Add'l
							Rec	Nonrecurring		Nonrecurring Disconnect		OSS Rates ($)					
								First	Add'l	First	Add'l	SOMEC	SOMAN	SOMAN	SOMAN	SOMAN	SOMAN
		Feature Activation on D-4 Channel Bank Private Line Loop Slot			UEP95	1PQWV	0.62										
		Feature Activation on D-4 Channel Bank Tjie Line/Trunk Loop Slot			UEP95	1PQWQ	0.62										
		Feature Activation on D-4 Channel Bank WATS Loop Slot			UEP95	1PQWA	0.62										
	Non-Recurring Charges (NRC) Associated with UNE-P Centrex																
		NRC Conversion Currently Combined Switch-As-Is with allowed changes, per port			UEP95	USAC2		0.102	0.102								
		Conversion of Existing Centrex Common Block, each			UEP95	USACN		18.95	8.32								
		New Centrex Standard Common Block			UEP95	M1ACS	0.00	669.80	78.32	111.05	13.27						
		New Centrex Customized Common Block			UEP95	M1ACC	0.00	669.80	78.32	111.05	13.27						
		NAR Establishment Charge, Per Occasion			UEP95	URECA	0.00	72.75									
	Additional Non-Recurring Charges (NRC)																
		Unbundled Miscellaneous Rate Element, Tag Loop at End Use Premise			UEP95	URETL		8.33	0.83								
		Unbundled Miscellaneous Rate Element, Tag Design Loop at End Use Premise			UEP95	URETN		11.21	1.10								
	UNE-P CENTREX - DMS100 (Valid in All States)																
	2-Wire VG Loop/2-Wire Voice Grade Port (Centrex) Combo																
	UNE Port/Loop Combination Rates (Non-Design)																
		2-Wire VG Loop/2-Wire Voice Grade Port (Centrex) Port Combo - Non-Design		1	UEP9D		10.79										
		2-Wire VG Loop/2-Wire Voice Grade Port (Centrex)Port Combo - Non-Design		2	UEP9D		15.52										
		2-Wire VG Loop/2-Wire Voice Grade Port (Centrex)Port Combo - Non-Design		3	UEP9D		31.74										
	UNE Port/Loop Combination Rates (Design)																
		2-Wire VG Loop/2-Wire Voice Grade Port (Centrex) Port Combo - Design		1	UEP9D		13.82										
		2-Wire VG Loop/2-Wire Voice Grade Port (Centrex)Port Combo - Design		2	UEP9D		18.60										
		2-Wire VG Loop/2-Wire Voice Grade Port (Centrex)Port Combo - Design		3	UEP9D		34.37										
	UNE Loop Rate																
		2-Wire Voice Grade Loop (SL 1) - Zone 1		1	UEP9D	UECS1	9.64										
		2-Wire Voice Grade Loop (SL 1) - Zone 2		2	UEP9D	UECS1	14.37										
		2-Wire Voice Grade Loop (SL 1) - Zone 3		3	UEP9D	UECS1	30.59										
		2-Wire Voice Grade Loop (SL 2) - Zone 1		1	UEP9D	UECS2	12.67										
		2-Wire Voice Grade Loop (SL 2) - Zone 2		2	UEP9D	UECS2	17.45										
		2-Wire Voice Grade Loop (SL 2) - Zone 3		3	UEP9D	UECS2	33.22										
	UNE Port Rate																
	ALL STATES																
		2-Wire Voice Grade Port (Centrex) Basic Local Area			UEP9D	UEPYA	1.15	21.29	15.49	2.85	2.67						
		2-Wire Voice Grade Port (Centrex 800 termination)Basic Local Area			UEP9D	UEPYB	1.15	21.29	15.49	2.85	2.67						
		2-Wire Voice Grade Port (Centrex / EBS-PSET)3Basic Local Area			UEP9D	UEPYC	1.15	21.29	15.49	2.85	2.67						
		2-Wire Voice Grade Port (Centrex / EBS-M5009)3Basic Local Area			UEP9D	UEPYD	1.15	21.29	15.49	2.85	2.67						
		2-Wire Voice Grade Port (Centrex / EBS-M5209))3 Basic Local Area			UEP9D	UEPYE	1.15	21.29	15.49	2.85	2.67						
		2-Wire Voice Grade Port (Centrex / EBS-M5112))3 Basic Local Area			UEP9D	UEPYF	1.15	21.29	15.49	2.85	2.67						
		2-Wire Voice Grade Port (Centrex / EBS-M5312))3Basic Local Area			UEP9D	UEPYG	1.15	21.29	15.49	2.85	2.67						
		2-Wire Voice Grade Port (Centrex / EBS-M5008))3 Basic Local Area			UEP9D	UEPYT	1.15	21.29	15.49	2.85	2.67						
		2-Wire Voice Grade Port (Centrex / EBS-M5208))3 Basic Local Area			UEP9D	UEPYU	1.15	21.29	15.49	2.85	2.67						

CATEGORY		RATE ELEMENTS	Interim	Zone	BCS	USOC	RATES ($)					Svc Order Submitted Elec per LSR	Svc Order Submitted Manually per LSR	Attachment: 2 Incremental Charge - Manual Svc Order vs. Electronic-1st	Attachment: 2 Incremental Charge - Manual Svc Order vs. Electronic-Add'l	Exhibit: A Incremental Charge - Manual Svc Order vs. Electronic-Disc 1st	Exhibit: A Incremental Charge - Manual Svc Order vs. Electronic-Disc Add'l
							Rec	Nonrecurring		Nonrecurring Disconnect		OSS Rates ($)					
								First	Add'l	First	Add'l	SOMEC	SOMAN	SOMAN	SOMAN	SOMAN	SOMAN
		2-Wire Voice Grade Port (Centrex / EBS-M5216))3 Basic Local Area			UEP9D	UEPYV	1.15	21.29	15.49	2.85	2.67						
		2-Wire Voice Grade Port (Centrex / EBS-M5316))3 Basic Local Area			UEP9D	UEPY3	1.15	21.29	15.49	2.85	2.67						
		2-Wire Voice Grade Port (Centrex with Caller ID) Basic Local Area			UEP9D	UEPYH	1.15	21.29	15.49	2.85	2.67						
		2-Wire Voice Grade Port (Centrex/Caller ID/Msg Wtg Lamp Indication))4 Basic Local Area			UEP9D	UEPYW	1.15	21.29	15.49	2.85	2.67						
		2-Wire Voice Grade Port (Centrex/Msg Wtg Lamp Indication))4 Basic Local Area			UEP9D	UEPYJ	1.15	21.29	15.49	2.85	2.67						
		2-Wire Voice Grade Port (Centrex from diff Serving Wire Center) 2,3-Basic Local Area			UEP9D	UEPYM	1.15	21.29	15.49	2.85	2.67						
		2-Wire Voice Grade Port (Centrex/differ SWC /EBS-PSET)2,3,4 Basic Local Area			UEP9D	UEPYO	1.15	21.29	15.49	2.85	2.67						
		2-Wire Voice Grade Port (Centrex/differ SWC /EBS-M5009)2,3,4 Basic Local Area			UEP9D	UEPYP	1.15	21.29	15.49	2.85	2.67						
		2-Wire Voice Grade Port (Centrex/differ SWC /EBS-5209)2,3,4 Basic Local Area			UEP9D	UEPYQ	1.15	21.29	15.49	2.85	2.67						
		2-Wire Voice Grade Port (Centrex/differ SWC /EBS-M5112)2,3,4 Basic Local Area			UEP9D	UEPYR	1.15	21.29	15.49	2.85	2.67						
		2-Wire Voice Grade Port (Centrex/differ SWC /EBS-M5312)2,3,4 Basic Local Area			UEP9D	UEPYS	1.15	21.29	15.49	2.85	2.67						
		2-Wire Voice Grade Port (Centrex/differ SWC /EBS-M5008)2,3,4 Basic Local Area			UEP9D	UEPY4	1.15	21.29	15.49	2.85	2.67						
		2-Wire Voice Grade Port (Centrex/differ SWC /EBS-M5208)2, 3 Basic Local Area			UEP9D	UEPY5	1.15	21.29	15.49	2.85	2.67						
		2-Wire Voice Grade Port (Centrex/differ SWC /EBS-M5216)2,3,4 Basic Local Area			UEP9D	UEPY6	1.15	21.29	15.49	2.85	2.67						
		2-Wire Voice Grade Port (Centrex/differ SWC /EBS-M5316)2,3,4 Basic Local Area			UEP9D	UEPY7	1.15	21.29	15.49	2.85	2.67						
		2-Wire Voice Grade Port, Diff Serving Wire Center - 800 Service Term 2,3			UEP9D	UEPYZ	1.15	21.29	15.49	2.85	2.67						
		2-Wire Voice Grade Port terminated in on Megalink or equivalent Basic Local Area			UEP9D	UEPY9	1.15	21.29	15.49	2.85	2.67						
		2-Wire Voice Grade Port Terminated on 800 Service Term Basic Local Area			UEP9D	UEPY2	1.15	21.29	15.49	2.85	2.67						
	AL, KY, LA, MS, SC, & TN Only																
		2-Wire Voice Grade Port (Centrex)			UEP9D	UEPQA	1.15	21.29	15.49	2.85	2.67						
		2-Wire Voice Grade Port (Centrex 800 termination)			UEP9D	UEPQB	1.15	21.29	15.49	2.85	2.67						
		2-Wire Voice Grade Port (Centrex / EBS-PSET)4			UEP9D	UEPQC	1.15	21.29	15.49	2.85	2.67						
		2-Wire Voice Grade Port (Centrex / EBS-M5009)4			UEP9D	UEPQD	1.15	21.29	15.49	2.85	2.67						
		2-Wire Voice Grade Port (Centrex / EBS-M5209)4			UEP9D	UEPQE	1.15	21.29	15.49	2.85	2.67						
		2-Wire Voice Grade Port (Centrex / EBS-M5112)4			UEP9D	UEPQF	1.15	21.29	15.49	2.85	2.67						
		2-Wire Voice Grade Port (Centrex / EBS-M5312)4			UEP9D	UEPQG	1.15	21.29	15.49	2.85	2.67						
		2-Wire Voice Grade Port (Centrex / EBS-M5008)4			UEP9D	UEPQT	1.15	21.29	15.49	2.85	2.67						
		2-Wire Voice Grade Port (Centrex / EBS-M5208)4			UEP9D	UEPQU	1.15	21.29	15.49	2.85	2.67						
		2-Wire Voice Grade Port (Centrex / EBS-M5216)4			UEP9D	UEPQV	1.15	21.29	15.49	2.85	2.67						
		2-Wire Voice Grade Port (Centrex / EBS-M5316)4			UEP9D	UEPQ3	1.15	21.29	15.49	2.85	2.67						
		2-Wire Voice Grade Port (Centrex with Caller ID)			UEP9D	UEPQH	1.15	21.29	15.49	2.85	2.67						
		2-Wire Voice Grade Port (Centrex/Caller ID/Msg Wtg Lamp Indication)4			UEP9D	UEPQW	1.15	21.29	15.49	2.85	2.67						
		2-Wire Voice Grade Port (Centrex/Msg Wtg Lamp Indication)4			UEP9D	UEPQJ	1.15	21.29	15.49	2.85	2.67						
		2-Wire Voice Grade Port (Centrex from diff Serving Wire Center) 2,3			UEP9D	UEPQM	1.15	21.29	15.49	2.85	2.67						
		2-Wire Voice Grade Port (Centrex/differ SWC /EBS-PSET)2,3,4			UEP9D	UEPQO	1.15	21.29	15.49	2.85	2.67						
		2-Wire Voice Grade Port (Centrex/differ SWC /EBS-M5009)2,3,4			UEP9D	UEPQP	1.15	21.29	15.49	2.85	2.67						

UNBUNDLED NETWORK ELEMENTS - Kentucky														Attachment: 2		Exhibit: A	
CATEGORY		RATE ELEMENTS	Interim	Zone	BCS	USOC	RATES ($)					Svc Order Submitted Elec per LSR	Svc Order Submitted Manually per LSR	Incremental Charge - Manual Svc Order vs. Electronic-1st	Incremental Charge - Manual Svc Order vs. Electronic-Add'l	Incremental Charge - Manual Svc Order vs. Electronic-Disc 1st	Incremental Charge - Manual Svc Order vs. Electronic-Disc Add'l
							Rec	Nonrecurring		Nonrecurring Disconnect		OSS Rates ($)					
								First	Add'l	First	Add'l	SOMEC	SOMAN	SOMAN	SOMAN	SOMAN	SOMAN
		2-Wire Voice Grade Port (Centrex/differ SWC /EBS-5209)2,3,4			UEP9D	UEPQQ	1.15	21.29	15.49	2.85	2.67						
		2-Wire Voice Grade Port (Centrex/differ SWC /EBS-M5112)2,3,4			UEP9D	UEPQR	1.15	21.29	15.49	2.85	2.67						
		2-Wire Voice Grade Port (Centrex/differ SWC /EBS-M5312)2,3,4			UEP9D	UEPQS	1.15	21.29	15.49	2.85	2.67						
		2-Wire Voice Grade Port (Centrex/differ SWC /EBS-M5008)2,3,4			UEP9D	UEPQ4	1.15	21.29	15.49	2.85	2.67						
		2-Wire Voice Grade Port (Centrex/differ SWC /EBS-M5208)2,3,4			UEP9D	UEPQ5	1.15	21.29	15.49	2.85	2.67						
		2-Wire Voice Grade Port (Centrex/differ SWC /EBS-M5216)2,3,4			UEP9D	UEPQ6	1.15	21.29	15.49	2.85	2.67						
		2-Wire Voice Grade Port (Centrex/differ SWC /EBS-M5316)2,3,4			UEP9D	UEPQ7	1.15	21.29	15.49	2.85	2.67						
		2-Wire Voice Grade Port, Diff Serving Wire Center - 800 Service Term 2,3			UEP9D	UEPQZ	1.15	21.29	15.49	2.85	2.67						
		2-Wire Voice Grade Port terminated in on Megalink or equivalent			UEP9D	UEPQ9	1.15	21.29	15.49	2.85	2.67						
		2-Wire Voice Grade Port Terminated on 800 Service Term			UEP9D	UEPQ2	1.15	21.29	15.49	2.85	2.67						
	Local Switching																
		Centrex Intercom Funtionality, per port			UEP9D	URECS	0.8873										
	Local Number Portability																
		Local Number Portability (1 per port)			UEP9D	LNPCC	0.35										
	Features																
		All Standard Features Offered, per port			UEP9D	UEPVF	0.00										
		All Select Features Offered, per port			UEP9D	UEPVS	0.00	405.66									
		All Centrex Control Features Offered, per port			UEP9D	UEPVC	0.00										
	NARS																
		Unbundled Network Access Register - Combination			UEP9D	UARCX	0.00	0.00	0.00	0.00	0.00						
		Unbundled Network Access Register - Inward			UEP9D	UAR1X	0.00	0.00	0.00	0.00	0.00						
		Unbundled Network Access Register - Outdial			UEP9D	UAROX	0.00	0.00	0.00	0.00	0.00						
	Miscellaneous Terminations																
	2-Wire Trunk Side																
		Trunk Side Terminations, each			UEP9D	CEND6	10.51	92.18	15.82	52.16	5.30						
	4-Wire Digital (1.544 Megabits)																
		DS1 Circuit Terminations, each			UEP9D	M1HD1	74.77	164.86	77.74	60.69	3.86						
		DS0 Channels Activiated per Channel			UEP9D	M1HDO	0.00	15.09									
	Interoffice Channel Mileage - 2-Wire																
		Interoffice Channel Facilities Termination			UEP9D	M1GBC	29.11										
		Interoffice Channel mileage, per mile or fraction of mile			UEP9D	M1GBM	0.01										
	Feature Activations (DS0) Centrex Loops on Channelized DS1 Service																
	D4 Channel Bank Feature Activations																
		Feature Activation on D-4 Channel Bank Centrex Loop Slot			UEP9D	1PQWS	0.62										
		Feature Activation on D-4 Channel Bank FX line Side Loop Slot			UEP9D	1PQW6	0.62										
		Feature Activation on D-4 Channel Bank FX Trunk Side Loop Slot			UEP9D	1PQW7	0.62										
		Feature Activation on D-4 Channel Bank Centrex Loop Slot - Different Wire Center			UEP9D	1PQWP	0.62										
		Feature Activation on D-4 Channel Bank Private Line Loop Slot			UEP9D	1PQWV	0.62										
		Feature Activation on D-4 Channel Bank Tjie Line/Trunk Loop Slot			UEP9D	1PQWQ	0.62										
		Feature Activation on D-4 Channel Bank WATS Loop Slot			UEP9D	1PQWA	0.62										
	Non-Recurring Charges (NRC) Associated with UNE-P Centrex																
		NRC Conversion Currently Combined Switch-As-Is with allowed changes, per port			UEP9D	USAC2		0.102	0.102								
		Conversion of existing Centrex Common Block, each			UEP9D	USACN		18.95	8.32								
		New Centrex Standard Common Block			UEP9D	M1ACS	0.00	669.80	78.32	111.05	13.27						

UNBUNDLED NETWORK ELEMENTS - Kentucky														Attachment: 2		Exhibit: A	
CATEGORY	RATE ELEMENTS	Interim	Zone	BCS	USOC	RATES ($)					Svc Order Submitted Elec per LSR	Svc Order Submitted Manually per LSR	Incremental Charge - Manual Svc Order vs. Electronic-1st	Incremental Charge - Manual Svc Order vs. Electronic-Add'l	Incremental Charge - Manual Svc Order vs. Electronic-Disc 1st	Incremental Charge - Manual Svc Order vs. Electronic-Disc Add'l
						Rec	Nonrecurring		Nonrecurring Disconnect		OSS Rates ($)					
							First	Add'l	First	Add'l	SOMEC	SOMAN	SOMAN	SOMAN	SOMAN	SOMAN
	New Centrex Customized Common Block			UEP9D	M1ACC	0.00	669.80	78.32	111.05	13.27						
	NAR Establishment Charge, Per Occasion			UEP9D	URECA	0.00	72.75									
Additional Non-Recurring Charges (NRC)																
	Unbundled Miscellaneous Rate Element, Tag Loop at End Use Premise			UEP9D	URETL		8.33	0.83								
	Unbundled Miscellaneous Rate Element, Tag Design Loop at End Use Premise			UEP9D	URETN		11.21	1.10								
UNE-P CENTREX - EWSD (Valid in AL, FL, KY, LA, MS & TN)																
2-Wire VG Loop/2-Wire Voice Grade Port (Centrex) Combo																
UNE Port/Loop Combination Rates (Non-Design)																
	2-Wire VG Loop/2-Wire Voice Grade Port (Centrex) Port Combo - Non-Design		1	UEP9E		10.79										
	2-Wire VG Loop/2-Wire Voice Grade Port (Centrex)Port Combo - Non-Design		2	UEP9E		15.52										
	2-Wire VG Loop/2-Wire Voice Grade Port (Centrex)Port Combo - Non-Design		3	UEP9E		31.74										
UNE Port/Loop Combination Rates (Design)																
	2-Wire VG Loop/2-Wire Voice Grade Port (Centrex) Port Combo - Design		1	UEP9E		13.82										
	2-Wire VG Loop/2-Wire Voice Grade Port (Centrex)Port Combo - Design		2	UEP9E		18.60										
	2-Wire VG Loop/2-Wire Voice Grade Port (Centrex)Port Combo - Design		3	UEP9E		34.37										
UNE Loop Rate																
	2-Wire Voice Grade Loop (SL 1) - Zone 1		1	UEP9E	UECS1	9.64										
	2-Wire Voice Grade Loop (SL 1) - Zone 2		2	UEP9E	UECS1	14.37										
	2-Wire Voice Grade Loop (SL 1) - Zone 3		3	UEP9E	UECS1	30.59										
	2-Wire Voice Grade Loop (SL 2) - Zone 1		1	UEP9E	UECS2	12.67										
	2-Wire Voice Grade Loop (SL 2) - Zone 2		2	UEP9E	UECS2	17.45										
	2-Wire Voice Grade Loop (SL 2) - Zone 3		3	UEP9E	UECS2	33.22										
UNE Port Rate																
AL, FL, KY, LA, MS, & TN only																
	2-Wire Voice Grade Port (Centrex) Basic Local Area			UEP9E	UEPYA	1.15	21.29	15.49	2.85	2.67						
	2-Wire Voice Grade Port (Centrex 800 termination)Basic Local Area			UEP9E	UEPYB	1.15	21.29	15.49	2.85	2.67						
	2-Wire Voice Grade Port (Centrex with Caller ID)1Basic Local Area			UEP9E	UEPYH	1.15	21.29	15.49	2.85	2.67						
	2-Wire Voice Grade Port (Centrex from diff Serving Wire Center)2,3 Basic Local Area			UEP9E	UEPYM	1.15	21.29	15.49	2.85	2.67						
	2-Wire Voice Grade Port, Diff Serving Wire Center 2,3 - 800 Service Term - Basic Local Area			UEP9E	UEPYZ	1.15	21.29	15.49	2.85	2.67						
	2-Wire Voice Grade Port terminated in on Megalink or equivalent - Basic Local Area			UEP9E	UEPY9	1.15	21.29	15.49	2.85	2.67						
	2-Wire Voice Grade Port Terminated on 800 Service Term - Basic Local Area			UEP9E	UEPY2	1.15	21.29	15.49	2.85	2.67						
AL, KY, LA, MS, & TN Only																
	2-Wire Voice Grade Port (Centrex)			UEP9E	UEPQA	1.15	21.29	15.49	2.85	2.67						
	2-Wire Voice Grade Port (Centrex 800 termination)			UEP9E	UEPQB	1.15	21.29	15.49	2.85	2.67						
	2-Wire Voice Grade Port (Centrex with Caller ID)1			UEP9E	UEPQH	1.15	21.29	15.49	2.85	2.67						
	2-Wire Voice Grade Port (Centrex from diff Serving Wire Center)2,3			UEP9E	UEPQM	1.15	21.29	15.49	2.85	2.67						
	2-Wire Voice Grade Port, Diff Serving Wire Center 2,3 - 800 Service Term			UEP9E	UEPQZ	1.15	21.29	15.49	2.85	2.67						
	2-Wire Voice Grade Port terminated in on Megalink or equivalent			UEP9E	UEPQ9	1.15	21.29	15.49	2.85	2.67						
	2-Wire Voice Grade Port Terminated on 800 Service Term			UEP9E	UEPQ2	1.15	21.29	15.49	2.85	2.67						
Local Switching																
	Centrex Intercom Funtionality, per port			UEP9E	URECS	0.8873										
Local Number Portability																

UNBUNDLED NETWORK ELEMENTS - Kentucky														Attachment: 2		Exhibit: A	
CATEGORY		RATE ELEMENTS	Interim	Zone	BCS	USOC	RATES ($)					Svc Order Submitted Elec per LSR	Svc Order Submitted Manually per LSR	Incremental Charge - Manual Svc Order vs. Electronic-1st	Incremental Charge - Manual Svc Order vs. Electronic-Add'l	Incremental Charge - Manual Svc Order vs. Electronic-Disc 1st	Incremental Charge - Manual Svc Order vs. Electronic-Disc Add'l
							Rec	Nonrecurring		Nonrecurring Disconnect		OSS Rates ($)					
								First	Add'l	First	Add'l	SOMEC	SOMAN	SOMAN	SOMAN	SOMAN	SOMAN
		Local Number Portability (1 per port)			UEP9E	LNPCC	0.35										
	Features																
		All Standard Features Offered, per port			UEP9E	UEPVF	0.00										
		All Select Features Offered, per port			UEP9E	UEPVS	0.00	405.66									
		All Centrex Control Features Offered, per port			UEP9E	UEPVC	0.00										
	NARS																
		Unbundled Network Access Register - Combination			UEP9E	UARCX	0.00	0.00	0.00	0.00	0.00						
		Unbundled Network Access Register - Indial			UEP9E	UAR1X	0.00	0.00	0.00	0.00	0.00						
		Unbundled Network Access Register - Outdial			UEP9E	UAROX	0.00	0.00	0.00	0.00	0.00						
	Miscellaneous Terminations																
	2-Wire Trunk Side																
		Trunk Side Terminations, each			UEP9E	CEND6	10.51	92.18	15.82	52.16	5.30						
	4-Wire Digital (1.544 Megabits)																
		DS1 Circuit Terminations, each			UEP9E	M1HD1	74.77	164.86	77.74	60.69	3.86						
		DS0 Channel Activated Per Channel			UEP9E	M1HDO	0.00	15.09									
	Interoffice Channel Mileage - 2-Wire																
		Interoffice Channel Facilities Termination			UEP9E	M1GBC	29.11										
		Interoffice Channel mileage, per mile or fraction of mile			UEP9E	M1GBM	0.01										
	Feature Activations (DS0) Centrex Loops on Channelized DS1 Service																
	D4 Channel Bank Feature Activations																
		Feature Activation on D-4 Channel Bank Centrex Loop Slot			UEP9E	1PQWS	0.62										
		Feature Activation on D-4 Channel Bank FX line Side Loop Slot			UEP9E	1PQW6	0.62										
		Feature Activation on D-4 Channel Bank FX Trunk Side Loop Slot			UEP9E	1PQW7	0.62										
		Feature Activation on D-4 Channel Bank Centrex Loop Slot - Different Wire Center			UEP9E	1PQWP	0.62										
		Feature Activation on D-4 Channel Bank Private Line Loop Slot			UEP9E	1PQWV	0.62										
		Feature Activation on D-4 Channel Bank Tjie Line/Trunk Loop Slot			UEP9E	1PQWQ	0.62										
		Feature Activation on D-4 Channel Bank WATS Loop Slot			UEP9E	1PQWA	0.62										
	Non-Recurring Charges (NRC) Associated with UNE-P Centrex																
		NRC Conversion Currently Combined Switch-As-Is with allowed changes, per port			UEP9E	USAC2		0.102	0.102								
		Conversion of Existing Centrex Common Block, each			UEP9E	USACN		18.95	8.32								
		New Centrex Standard Common Block			UEP9E	M1ACS	0.00	669.80	78.32	111.05	13.27						
		New Centrex Customized Common Block			UEP9E	M1ACC	0.00	669.80	78.32	111.05	13.27						
		NAR Establishment Charge, Per Occasion			UEP9E	URECA	0.00	72.75									
	Additional Non-Recurring Charges (NRC)																
		Unbundled Miscellaneous Rate Element, Tag Loop at End Use Premise			UEP9E	URETL		8.33	0.83								
		Unbundled Miscellaneous Rate Element, Tag Design Loop at End Use Premise			UEP9E	URETN		11.21	1.10								
	UNE-P CENTREX - DCO - Valid in AL, KY, LA, MS, & TN)																
	2-Wire VG Loop/2-Wire Voice Grade Port (Centrex) Combo																
	UNE Port/Loop Combination Rates (Non-Design)																
		2-Wire VG Loop/2-Wire Voice Grade Port (Centrex) Port Combo - Non-Design		1	UEP93		10.79										
		2-Wire VG Loop/2-Wire Voice Grade Port (Centrex)Port Combo - Non-Design		2	UEP93		15.52										
		2-Wire VG Loop/2-Wire Voice Grade Port (Centrex)Port Combo - Non-Design		3	UEP93		31.74										
	UNE Port/Loop Combination Rates (Design)																
		2-Wire VG Loop/2-Wire Voice Grade Port (Centrex) Port Combo - Design		1	UEP93		13.82										
		2-Wire VG Loop/2-Wire Voice Grade Port (Centrex)Port Combo - Design		2	UEP93		18.60										

UNBUNDLED NETWORK ELEMENTS - Kentucky														Attachment: 2		Exhibit: A	
CATEGORY		RATE ELEMENTS	Interim	Zone	BCS	USOC	RATES ($)					Svc Order Submitted Elec per LSR	Svc Order Submitted Manually per LSR	Incremental Charge - Manual Svc Order vs. Electronic-1st	Incremental Charge - Manual Svc Order vs. Electronic-Add'l	Incremental Charge - Manual Svc Order vs. Electronic-Disc 1st	Incremental Charge - Manual Svc Order vs. Electronic-Disc Add'l
							Rec	Nonrecurring		Nonrecurring Disconnect		OSS Rates ($)					
								First	Add'l	First	Add'l	SOMEC	SOMAN	SOMAN	SOMAN	SOMAN	SOMAN
		2-Wire VG Loop/2-Wire Voice Grade Port (Centrex)Port Combo - Design		3	UEP93		34.37										
	UNE Loop Rate																
		2-Wire Voice Grade Loop (SL 1) - Zone 1		1	UEP93	UECS1	9.64										
		2-Wire Voice Grade Loop (SL 1) - Zone 2		2	UEP93	UECS1	14.37										
		2-Wire Voice Grade Loop (SL 1) - Zone 3		3	UEP93	UECS1	30.59										
		2-Wire Voice Grade Loop (SL 2) - Zone 1		1	UEP93	UECS2	12.67										
		2-Wire Voice Grade Loop (SL 2) - Zone 2		2	UEP93	UECS2	17.45										
		2-Wire Voice Grade Loop (SL 2) - Zone 3		3	UEP93	UECS2	33.22										
	UNE Port Rate																
	AL, KY, LA, MS, & TN only																
		2-Wire Voice Grade Port (Centrex) Basic Local Area			UEP93	UEPYA	1.15	21.29	15.49	2.85	2.67						
		2-Wire Voice Grade Port (Centrex 800 termination)Basic Local Area			UEP93	UEPYB	1.15	21.29	15.49	2.85	2.67						
		2-Wire Voice Grade Port (Centrex with Caller ID)1Basic Local Area			UEP93	UEPYH	1.15	21.29	15.49	2.85	2.67						
		2-Wire Voice Grade Port (Centrex from diff Serving Wire Center)2,3 Basic Local Area			UEP93	UEPYM	1.15	21.29	15.49	2.85	2.67						
		2-Wire Voice Grade Port, Diff Serving Wire Center - 2,3 - 800 Service Term - Basic Local Area			UEP93	UEPYZ	1.15	21.29	15.49	2.85	2.67						
		2-Wire Voice Grade Port terminated in on Megalink or equivalent - Basic Local Area			UEP93	UEPY9	1.15	21.29	15.49	2.85	2.67						
		2-Wire Voice Grade Port Terminated on 800 Service Term - Basic Local Area			UEP93	UEPY2	1.15	21.29	15.49	2.85	2.67						
		2-Wire Voice Grade Port (Centrex)			UEP93	UEPQA	1.15	21.29	15.49	2.85	2.67						
		2-Wire Voice Grade Port (Centrex 800 termination)			UEP93	UEPQB	1.15	21.29	15.49	2.85	2.67						
		2-Wire Voice Grade Port (Centrex with Caller ID)1			UEP93	UEPQH	1.15	21.29	15.49	2.85	2.67						
		2-Wire Voice Grade Port (Centrex from diff Serving Wire Center)2,3			UEP93	UEPQM	1.15	21.29	15.49	2.85	2.67						
		2-Wire Voice Grade Port, Diff Serving Wire Center - 2,3 -800 Service Term			UEP93	UEPQZ	1.15	21.29	15.49	2.85	2.67						
		2-Wire Voice Grade Port terminated in on Megalink or equivalent			UEP93	UEPQ9	1.15	21.29	15.49	2.85	2.67						
		2-Wire Voice Grade Port Terminated on 800 Service Term			UEP93	UEPQ2	1.15	21.29	15.49	2.85	2.67						
	Local Switching																
		Centrex Intercom Funtionality, per port			UEP93	URECS	0.8873										
	Local Number Portability																
		Local Number Portability (1 per port)			UEP93	LNPCC	0.35										
	Features																
		All Standard Features Offered, per port			UEP93	UEPVF	0.00										
		All Centrex Control Features Offered, per port			UEP93	UEPVC	0.00										
	NARS																
		Unbundled Network Access Register - Combination			UEP93	UARCX	0.00	0.00	0.00	0.00	0.00						
		Unbundled Network Access Register - Indial			UEP93	UAR1X	0.00	0.00	0.00	0.00	0.00						
		Unbundled Network Access Register - Outdial			UEP93	UAROX	0.00	0.00	0.00	0.00	0.00						
	Miscellaneous Terminations																
	2-Wire Trunk Side																
		Trunk Side Terminations, each			UEP93	CEND6	10.51	92.18	15.82	52.16	5.30						
	4-Wire Digital (1.544 Megabits)																
		DS1 Circuit Terminations, each			UEP93	M1HD1	74.77	164.86	77.74	60.69	3.86						
		DS0 Channels Activated, Per Channel			UEP93	M1HDO	0.00	15.09									
	Interoffice Channel Mileage - 2-Wire																
		Interoffice Channel Facilities Termination			UEP93	M1GBC	29.11										
		Interoffice Channel mileage, per mile or fraction of mile			UEP93	M1GBM	0.01										
	Feature Activations (DS0) Centrex Loops on Channelized DS1 Service																
	D4 Channel Bank Feature Activations																
		Feature Activation on D-4 Channel Bank Centrex Loop Slot			UEP93	1PQWS	0.62										
		Feature Activation on D-4 Channel Bank FX Line Side Loop Slot			UEP93	1PQW6	0.62										

UNBUNDLED NETWORK ELEMENTS - Kentucky														Attachment: 2		Exhibit: A	
CATEGORY		RATE ELEMENTS	Interim	Zone	BCS	USOC	RATES ($)					Svc Order Submitted Elec per LSR	Svc Order Submitted Manually per LSR	Incremental Charge - Manual Svc Order vs. Electronic-1st	Incremental Charge - Manual Svc Order vs. Electronic-Add'l	Incremental Charge - Manual Svc Order vs. Electronic-Disc 1st	Incremental Charge - Manual Svc Order vs. Electronic-Disc Add'l
							Rec	Nonrecurring		Nonrecurring Disconnect		OSS Rates ($)					
								First	Add'l	First	Add'l	SOMEC	SOMAN	SOMAN	SOMAN	SOMAN	SOMAN
		Feature Activation on D-4 Channel Bank FX Trunk Side Loop Slot			UEP93	1PQW7	0.62										
		Feature Activation on D-4 Channel Bank Centrex Loop Slot - Different Wire Center			UEP93	1PQWP	0.62										
		Feature Activation on D-4 Channel Bank Private Line Loop Slot			UEP93	1PQWV	0.62										
		Feature Activation on D-4 Channel Bank Tie Line/Trunk Loop Slot			UEP93	1PQWQ	0.62										
		Feature Activation on D-4 Channel Bank WATS Loop Slot			UEP93	1PQWA	0.62										
	Non-Recurring Charges (NRC) Associated with UNE-P Centrex																
		NRC Conversion Currently Combined Switch-As-Is with allowed changes, per port			UEP93	USAC2		0.102	0.102								
		Conversion of Existing Centrex Common Block, each			UEP93	USACN		18.95	8.32								
		New Centrex Standard Common Block			UEP93	M1ACS	0.00	669.80	78.32	111.05	13.27						
		New Centrex Customized Common Block			UEP93	M1ACC	0.00	669.80	78.32	111.05	13.27						
		NAR Establishment Charge, Per Occasion			UEP93	URECA	0.00	72.75									
	Additional Non-Recurring Charges (NRC)																
		Unbundled Miscellaneous Rate Element, Tag Loop at End Use Premise			UEP93	URETL		8.33	0.83								
		Unbundled Miscellaneous Rate Element, Tag Design Loop at End Use Premise			UEP93	URETN		11.21	1.10								
	Note 1 - Required Port for Centrex Control in 1AESS, 5ESS & EWSD																
	Note 2 - Requres Interoffice Channel Mileage																
	Note 3 - Installation is combination of Installation charge for SL2 Loop and Port																
	Note 4 - Requires Specific Customer Premises Equipment																
	Note: Rates displaying an "R" in Interim column are interim and subject to rate true-up as set forth in General Terms and Conditions.																

UNBUNDLED NETWORK ELEMENTS - Louisiana													Attachment: 2		Exhibit: A	
CATEGORY	RATE ELEMENTS	Interim	Zone	BCS	USOC	RATES ($)					Svc Order Submitted Elec per LSR	Svc Order Submitted Manually per LSR	Incremental Charge - Manual Svc Order vs. Electronic-1st	Incremental Charge - Manual Svc Order vs. Electronic-Add'l	Incremental Charge - Manual Svc Order vs. Electronic-Disc 1st	Incremental Charge - Manual Svc Order vs. Electronic-Disc Add'l
						Rec	Nonrecurring		Nonrecurring Disconnect		OSS Rates ($)					
							First	Add'l	First	Add'l	SOMEC	SOMAN	SOMAN	SOMAN	SOMAN	SOMAN
	The "Zone" shown in the sections for stand-alone loops or loops as part of a combination refers to Geographically Deaveraged UNE Zones. To view Geographically Deaveraged UNE Zone Designations by Central Office, refer to internet Website: http://www.interconnection.bellsouth.com/become_a_clec/html/interconnection.htm															
OPERATIONAL SUPPORT SYSTEMS (OSS) - "REGIONAL RATES"																
	NOTE: (1) CLEC should contact its contract negotiator if it prefers the "state specific" OSS charges as ordered by the State Commissions. The OSS charges currently contained in this rate exhibit are the BellSouth "regional" service ordering charges. CLEC may elect either the state specific Commission ordered rates for the service ordering charges, or CLEC may elect the regional service ordering charge, however, CLEC can not obtain a mixture of the two regardless if CLEC has a interconnection contract established in each of the 9 states.															
	NOTE: (2) Any element that can be ordered electronically will be billed according to the SOMEC rate listed in this category. Please refer to BellSouth's Local Ordering Handbook (LOH) to determine if a product can be ordered electronically. For those elements that cannot be ordered electronically at present per the LOH, the listed SOMEC rate in this category reflects the charge that would be billed to a CLEC once electronic ordering capabilities come on-line for that element. Otherwise, the manual ordering charge, SOMAN, will be applied to a CLECs bill when it submits an LSR to BellSouth.															
	OSS - Electronic Service Order Charge, Per Local Service Request (LSR) - UNE Only				SOMEC		3.50	0.00	3.50	0.00						
	OSS - Manual Service Order Charge, Per Local Service Request (LSR) - UNE Only				SOMAN		15.20	0.00	15.20	0.00						
UNE SERVICE DATE ADVANCEMENT CHARGE																
	NOTE: The Expedite charge will be maintained commensurate with BellSouth's FCC No.1 Tariff, Section 5 as applicable.															
	UNE Expedite Charge per Circuit or Line Assignable USOC, per Day			UAL, UEANL, UCL, UEF, UDF, UEQ, UDL, UENTW, UDN, UEA, UHL, ULC, USL, U1T12, U1T48, U1TD1, U1TD3, U1TDX, U1TO3, U1TS1, U1TVX, UC1BC, UC1BL, UC1CC, UC1CL, UC1DC, UC1DL, UC1EC, UC1EL, UC1FC, UC1FL, UC1GC, UC1GL, UC1HC, UC1HL, UDL12, UDL48, UDLO3, UDLSX, UE3, ULD12, ULD48, ULDD1, ULDD3, ULDDX, ULDO3, ULDS1, ULDVX, UNC1X, UNC3X, UNCDX, UNCNX, UNCSX, UNCVX, UNLD1, UNLD3, UXTD1, UXTD3, UXTS1, U1TUC, U1TUD, U1TUB, U1TUA	SDASP		200.00									
UNBUNDLED EXCHANGE ACCESS LOOP																
	2-WIRE ANALOG VOICE GRADE LOOP															
	2-Wire Analog Voice Grade Loop - Service Level 1- Zone 1		1	UEANL	UEAL2	12.90	36.54	16.87								
	2-Wire Analog Voice Grade Loop - Service Level 1- Zone 2		2	UEANL	UEAL2	23.33	36.54	16.87								
	2-Wire Analog Voice Grade Loop - Service Level 1- Zone 3		3	UEANL	UEAL2	48.43	36.54	16.87								
	2-Wire Analog Voice Grade Loop - Service Level 1- Zone 1		1	UEANL	UEASL	12.90	36.54	16.87								
	2-Wire Analog Voice Grade Loop - Service Level 1- Zone 2		2	UEANL	UEASL	23.33	36.54	16.87								
	2-Wire Analog Voice Grade Loop - Service Level 1- Zone 3		3	UEANL	UEASL	48.43	36.54	16.87								
	Unbundled Miscellaneous Rate Element, Tag Loop at End User Premise			UEANL	URETL		8.33	0.83								
	Loop Testing - Basic 1st Half Hour			UEANL	URET1		33.17	33.17								
	Loop Testing - Basic Additional Half Hour			UEANL	URETA		19.28	19.28								

UNBUNDLED NETWORK ELEMENTS - Louisiana														Attachment: 2		Exhibit: A	
CATEGORY		RATE ELEMENTS	Interim	Zone	BCS	USOC	RATES ($)					Svc Order Submitted Elec per LSR	Svc Order Submitted Manually per LSR	Incremental Charge - Manual Svc Order vs. Electronic-1st	Incremental Charge - Manual Svc Order vs. Electronic-Add'l	Incremental Charge - Manual Svc Order vs. Electronic-Disc 1st	Incremental Charge - Manual Svc Order vs. Electronic-Disc Add'l
							Rec	Nonrecurring		Nonrecurring Disconnect		OSS Rates ($)					
								First	Add'l	First	Add'l	SOMEC	SOMAN	SOMAN	SOMAN	SOMAN	SOMAN
		CLEC to CLEC Conversion Charge Without Outside Dispatch (UVL-SL1)			UEANL	UREWO		15.75	8.93								
		Unbundled Voice Loop, Non-Design Voice Loop, billing for BST providing make-up (Engineering Information - E.I.)			UEANL	UEANM		13.04	13.04								
		Manual Order Coordination for UVL-SL1s (per loop)			UEANL	UEAMC		7.92	7.92								
		Order Coordination for Specified Conversion Time for UVL-SL1 (per LSR)			UEANL	OCOSL		17.56	17.56								
	2-WIRE Unbundled COPPER LOOP																
		2-Wire Unbundled Copper Loop - Non-Designed Zone 1		1	UEQ	UEQ2X	12.40	35.27	15.60								
		2 Wire Unbundled Copper Loop - Non-Designed - Zone 2		2	UEQ	UEQ2X	14.32	35.27	15.60								
		2 Wire Unbundled Copper Loop - Non-Designed - Zone 3		3	UEQ	UEQ2X	16.87	35.27	15.60								
		Unbundled Miscellaneous Rate Element, Tag Loop at End User Premise			UEQ	URETL		8.33	0.83								
		Manual Order Coordination 2 Wire Unbundled Copper Loop - Non-Designed (per loop)			UEQ	USBMC		7.92	7.92								
		Unbundled Copper Loop, Non-Design Copper Loop, billing for BST providing make-up (Engineering Information - E.I.)			UEQ	UEQMU		13.04	13.04								
		Loop Testing - Basic 1st Half Hour			UEQ	URET1		33.17	33.17								
		Loop Testing - Basic Additional Half Hour			UEQ	URETA		19.28	19.28								
		CLEC to CLEC Conversion Charge Without Outside Dispatch (UCL-ND)			UEQ	UREWO		14.25	7.42								
UNBUNDLED EXCHANGE ACCESS LOOP																	
	2-WIRE ANALOG VOICE GRADE LOOP																
		2 Wire Analog Voice Grade Loop-Service Level 1-Line Splitting-Zone 1		1	UEPSR UEPSB	UEALS	12.90	36.54	16.87	0.00	0.00						
		2 Wire Analog Voice Grade Loop-Service Level 1-Line Splitting-Zone 1		1	UEPSR UEPSB	UEABS	12.90	36.54	16.87	0.00	0.00						
		2 Wire Analog Voice Grade Loop- Service Level 1-Line Splitting-Zone 2		2	UEPSR UEPSB	UEALS	23.33	36.54	16.87	0.00	0.00						
		2 Wire Analog Voice Grade Loop- Service Level 1-Line Splitting-Zone 2		2	UEPSR UEPSB	UEABS	23.33	36.54	16.87	0.00	0.00						
		2 Wire Analog Voice Grade Loop-Service Level 1-Line Splitting-Zone 3		3	UEPSR UEPSB	UEALS	48.43	36.54	16.87	0.00	0.00						
		2 Wire Analog Voice Grade Loop-Service Level 1-Line Splitting-Zone 3		3	UEPSR UEPSB	UEABS	48.43	36.54	16.87	0.00	0.00						
UNBUNDLED EXCHANGE ACCESS LOOP																	
	2-WIRE ANALOG VOICE GRADE LOOP																
		2-Wire Analog Voice Grade Loop - Service Level 2 w/Loop or Ground Start Signaling - Zone 1		1	UEA	UEAL2	14.93	102.10	65.72								
		2-Wire Analog Voice Grade Loop - Service Level 2 w/Loop or Ground Start Signaling - Zone 2		2	UEA	UEAL2	25.35	102.10	65.72								
		2-Wire Analog Voice Grade Loop - Service Level 2 w/Loop or Ground Start Signaling - Zone 3		3	UEA	UEAL2	50.46	102.10	65.72								
		Order Coordination for Specified Conversion Time (per LSR)			UEA	OCOSL		17.56									
		2-Wire Analog Voice Grade Loop - Service Level 2 w/Reverse Battery Signaling - Zone 1		1	UEA	UEAR2	14.93	102.10	65.72								
		2-Wire Analog Voice Grade Loop - Service Level 2 w/Reverse Battery Signaling - Zone 2		2	UEA	UEAR2	25.35	102.10	65.72								
		2-Wire Analog Voice Grade Loop - Service Level 2 w/Reverse Battery Signaling - Zone 3		3	UEA	UEAR2	50.46	102.10	65.72								
		Order Coordination for Specified Conversion Time (per LSR)			UEA	OCOSL		17.56									
		CLEC to CLEC Conversion Charge without outside dispatch			UEA	UREWO		87.59	36.30								
		Loop Tagging - Service Level 2 (SL2)			UEA	URETL		11.20	1.10								
	4-WIRE ANALOG VOICE GRADE LOOP																
		4-Wire Analog Voice Grade Loop - Zone 1		1	UEA	UEAL4	30.81	127.40	91.02								
		4-Wire Analog Voice Grade Loop - Zone 2		2	UEA	UEAL4	38.32	127.40	91.02								
		4-Wire Analog Voice Grade Loop - Zone 3		3	UEA	UEAL4	60.39	127.40	91.02								
		Order Coordination for Specified Conversion Time (per LSR)			UEA	OCOSL		17.56									
		CLEC to CLEC Conversion Charge without outside dispatch			UEA	UREWO		87.59	36.30								

UNBUNDLED NETWORK ELEMENTS - Louisiana														Attachment: 2		Exhibit: A	
CATEGORY		RATE ELEMENTS	Interim	Zone	BCS	USOC	RATES ($)					Svc Order Submitted Elec per LSR	Svc Order Submitted Manually per LSR	Incremental Charge - Manual Svc Order vs. Electronic-1st	Incremental Charge - Manual Svc Order vs. Electronic-Add'l	Incremental Charge - Manual Svc Order vs. Electronic-Disc 1st	Incremental Charge - Manual Svc Order vs. Electronic-Disc Add'l
							Rec	Nonrecurring		Nonrecurring Disconnect		OSS Rates ($)					
								First	Add'l	First	Add'l	SOMEC	SOMAN	SOMAN	SOMAN	SOMAN	SOMAN
	2-WIRE ISDN DIGITAL GRADE LOOP																
		2-Wire ISDN Digital Grade Loop - Zone 1		1	UDN	U1L2X	22.09	113.34	76.96								
		2-Wire ISDN Digital Grade Loop - Zone 2		2	UDN	U1L2X	35.28	113.34	76.96								
		2-Wire ISDN Digital Grade Loop - Zone 3		3	UDN	U1L2X	65.18	113.34	76.96								
		Order Coordination For Specified Conversion Time (per LSR)			UDN	OCOSL		17.56									
		CLEC to CLEC Conversion Charge without outside dispatch			UDN	UREWO		91.49	44.09								
	2-WIRE ASYMMETRICAL DIGITAL SUBSCRIBER LINE (ADSL) COMPATIBLE LOOP																
		2 Wire Unbundled ADSL Loop including manual service inquiry & facility reservation - Zone 1		1	UAL	UAL2X	12.29	117.08	68.36								
		2 Wire Unbundled ADSL Loop including manual service inquiry & facility reservation - Zone 2		2	UAL	UAL2X	14.09	117.08	68.36								
		2 Wire Unbundled ADSL Loop including manual service inquiry & facility reservation - Zone 3		3	UAL	UAL2X	15.75	117.08	68.36								
		Order Coordination for Specified Conversion Time (per LSR)			UAL	OCOSL		17.56									
		2 Wire Unbundled ADSL Loop without manual service inquiry & facility reservaton - Zone 1		1	UAL	UAL2W	12.29	92.83	56.02								
		2 Wire Unbundled ADSL Loop without manual service inquiry & facility reservaton - Zone 2		2	UAL	UAL2W	14.09	92.83	56.02								
		2 Wire Unbundled ADSL Loop without manual service inquiry & facility reservaton - Zone 3		3	UAL	UAL2W	15.75	92.83	56.02								
		Order Coordination for Specified Conversion Time (per LSR)			UAL	OCOSL		17.56									
		CLEC to CLEC Conversion Charge without outside dispatch			UAL	UREWO		86.07	40.34								
	2-WIRE HIGH BIT RATE DIGITAL SUBSCRIBER LINE (HDSL) COMPATIBLE LOOP																
		2 Wire Unbundled HDSL Loop including manual service inquiry & facility reservation - Zone 1		1	UHL	UHL2X	9.79	125.50	76.77								
		2 Wire Unbundled HDSL Loop including manual service inquiry & facility reservation - Zone 2		2	UHL	UHL2X	11.52	125.50	76.77								
		2 Wire Unbundled HDSL Loop including manual service inquiry & facility reservation - Zone 3		3	UHL	UHL2X	12.74	125.50	76.77								
		Order Coordination for Specified Conversion Time (per LSR)			UHL	OCOSL		17.56									
		2 Wire Unbundled HDSL Loop without manual service inquiry and facility reservation - Zone 1		1	UHL	UHL2W	9.79	101.24	64.43								
		2 Wire Unbundled HDSL Loop without manual service inquiry and facility reservation - Zone 2		2	UHL	UHL2W	11.52	101.24	64.43								
		2 Wire Unbundled HDSL Loop without manual service inquiry and facility reservation - Zone 3		3	UHL	UHL2W	12.74	101.24	64.43								
		Order Coordination for Specified Conversion Time (per LSR)			UHL	OCOSL		17.56									
		CLEC to CLEC Conversion Charge without outside dispatch			UHL	UREWO		86.00	40.34								
	4-WIRE HIGH BIT RATE DIGITAL SUBSCRIBER LINE (HDSL) COMPATIBLE LOOP																
		4 Wire Unbundled HDSL Loop including manual service inquiry and facility reservation - Zone 1		1	UHL	UHL4X	16.24	153.26	104.54								
		4-Wire Unbundled HDSL Loop including manual service inquiry and facility reservation - Zone 2		2	UHL	UHL4X	16.65	153.26	104.54								
		4-Wire Unbundled HDSL Loop including manual service inquiry and facility reservation - Zone 3		3	UHL	UHL4X	17.34	153.26	104.54								
		Order Coordination for Specified Conversion Time (per LSR)			UHL	OCOSL		17.56									
		4-Wire Unbundled HDSL Loop without manual service inquiry and facility reservation - Zone 1		1	UHL	UHL4W	16.24	129.00	92.20								
		4-Wire Unbundled HDSL Loop without manual service inquiry and facility reservation - Zone 2		2	UHL	UHL4W	16.65	129.00	92.20								
		4-Wire Unbundled HDSL Loop without manual service inquiry and facility reservation - Zone 3		3	UHL	UHL4W	17.34	129.00	92.20								
		Order Coordination for Specified Conversion Time (per LSR)			UHL	OCOSL		17.56									
		CLEC to CLEC Conversion Charge without outside dispatch			UHL	UREWO		86.00	40.34								
	4-WIRE DS1 DIGITAL LOOP																
		4-Wire DS1 Digital Loop - Zone 1		1	USL	USLXX	85.70	245.16	152.98								
		4-Wire DS1 Digital Loop - Zone 2		2	USL	USLXX	194.96	245.16	152.98								
		4-Wire DS1 Digital Loop - Zone 3		3	USL	USLXX	491.94	245.16	152.98								
		Order Coordination for Specified Conversion Time (per LSR)			USL	OCOSL		17.56									

UNBUNDLED NETWORK ELEMENTS - Louisiana														Attachment: 2		Exhibit: A	
CATEGORY		RATE ELEMENTS	Interim	Zone	BCS	USOC	RATES ($)					Svc Order Submitted Elec per LSR	Svc Order Submitted Manually per LSR	Incremental Charge - Manual Svc Order vs. Electronic-1st	Incremental Charge - Manual Svc Order vs. Electronic-Add'l	Incremental Charge - Manual Svc Order vs. Electronic-Disc 1st	Incremental Charge - Manual Svc Order vs. Electronic-Disc Add'l
							Rec	Nonrecurring		Nonrecurring Disconnect		OSS Rates ($)					
								First	Add'l	First	Add'l	SOMEC	SOMAN	SOMAN	SOMAN	SOMAN	SOMAN
		CLEC to CLEC Conversion Charge without outside dispatch			USL	UREWO		100.93	42.98								
	4-WIRE 19.2, 56 OR 64 KBPS DIGITAL GRADE LOOP																
		4 Wire Unbundled Digital 19.2 Kbps		1	UDL	UDL19	30.99	121.86	85.48								
		4 Wire Unbundled Digital 19.2 Kbps		2	UDL	UDL19	36.78	121.86	85.48								
		4 Wire Unbundled Digital 19.2 Kbps		3	UDL	UDL19	38.92	121.86	85.48								
		4 Wire Unbundled Digital Loop 56 Kbps - Zone 1		1	UDL	UDL56	30.99	121.86	85.48								
		4 Wire Unbundled Digital Loop 56 Kbps - Zone 2		2	UDL	UDL56	36.78	121.86	85.48								
		4 Wire Unbundled Digital Loop 56 Kbps - Zone 3		3	UDL	UDL56	38.92	121.86	85.48								
		Order Coordination for Specified Conversion Time (per LSR)			UDL	OCOSL		17.56									
		4 Wire Unbundled Digital Loop 64 Kbps - Zone 1		1	UDL	UDL64	30.99	121.86	85.48								
		4 Wire Unbundled Digital Loop 64 Kbps - Zone 2		2	UDL	UDL64	36.78	121.86	85.48								
		4 Wire Unbundled Digital Loop 64 Kbps - Zone 3		3	UDL	UDL64	38.92	121.86	85.48								
		Order Coordination for Specified Conversion Time (per LSR)			UDL	OCOSL		17.56									
		CLEC to CLEC Conversion Charge without outside dispatch			UDL	UREWO		101.97	49.67								
	2-WIRE Unbundled COPPER LOOP																
		2-Wire Unbundled Copper Loop-Designed including manual service inquiry & facility reservation - Zone 1		1	UCL	UCLPB	12.29	116.18	67.46								
		2-Wire Unbundled Copper Loop-Designed including manual service inquiry & facility reservation - Zone 2		2	UCL	UCLPB	14.09	116.18	67.46								
		2 Wire Unbundled Copper Loop-Designed including manual service inquiry & facility reservation - Zone 3		3	UCL	UCLPB	15.75	116.18	67.46								
		Order Coordination for Unbundled Copper Loops (per loop)			UCL	UCLMC		7.92	7.92								
		2-Wire Unbundled Copper Loop-Designed without manual service inquiry and facility reservation - Zone 1		1	UCL	UCLPW	12.29	91.92	55.12								
		2-Wire Unbundled Copper Loop-Designed without manual service inquiry and facility reservation - Zone 2		2	UCL	UCLPW	14.09	91.92	55.12								
		2-Wire Unbundled Copper Loop-Designed without manual service inquiry and facility reservation - Zone 3		3	UCL	UCLPW	15.75	91.92	55.12								
		Order Coordination for Unbundled Copper Loops (per loop)			UCL	UCLMC		7.92	7.92								
		CLEC to CLEC Conversion Charge without outside dispatch (UCL-Des)			UCL	UREWO		91.92	42.47								
	4-WIRE COPPER LOOP																
		4-Wire Copper Loop-Designed including manual service inquiry and facility reservation - Zone 1		1	UCL	UCL4S	22.27	139.69	90.96								
		4-Wire Copper Loop-Designed including manual service inquiry and facility reservation - Zone 2		2	UCL	UCL4S	18.95	139.69	90.96								
		4-Wire Copper Loop-Designed including manual service inquiry and facility reservation - Zone 3		3	UCL	UCL4S	10.99	139.69	90.96								
		Order Coordination for Unbundled Copper Loops (per loop)			UCL	UCLMC		7.92	7.92								
		4-Wire Copper Loop-Designed without manual service inquiry and facility reservation - Zone 1		1	UCL	UCL4W	22.27	115.43	78.63								
		4-Wire Copper Loop-Designed without manual service inquiry and facility reservation - Zone 2		2	UCL	UCL4W	18.95	115.43	78.63								
		4-Wire Copper Loop-Designed without manual service inquiry and facility reservation - Zone 3		3	UCL	UCL4W	10.99	115.43	78.63								
		Order Coordination for Unbundled Copper Loops (per loop)			UCL	UCLMC		7.92	7.92								
		CLEC to CLEC Conversion Charge without outside dispatch (UCL-Des)			UCL	UREWO		91.92	42.47								
LOOP MODIFICATION																	
		Unbundled Loop Modification, Removal of Load Coils - 2 Wire pair less than or equal to 18k ft, per Unbundled Loop			UAL, UHL, UCL, UEQ, ULS, UEA, UEANL, UEPSR, UEPSB	ULM2L		0.00	0.00								
		Unbundled Loop Modification Removal of Load Coils - 4 Wire less than or equal to 18K ft, per Unbundled Loop			UHL, UCL, UEA	ULM4L		0.00	0.00								
		Unbundled Loop Modification Removal of Bridged Tap Removal, per unbundled loop			UAL, UHL, UCL, UEQ, ULS, UEA, UEANL, UEPSR, UEPSB	ULMBT		12.15	12.15								

UNBUNDLED NETWORK ELEMENTS - Louisiana														Attachment: 2		Exhibit: A	
CATEGORY		RATE ELEMENTS	Interim	Zone	BCS	USOC	RATES ($)					Svc Order Submitted Elec per LSR	Svc Order Submitted Manually per LSR	Incremental Charge - Manual Svc Order vs. Electronic-1st	Incremental Charge - Manual Svc Order vs. Electronic-Add'l	Incremental Charge - Manual Svc Order vs. Electronic-Disc 1st	Incremental Charge - Manual Svc Order vs. Electronic-Disc Add'l
							Rec	Nonrecurring		Nonrecurring Disconnect		OSS Rates ($)					
								First	Add'l	First	Add'l	SOMEC	SOMAN	SOMAN	SOMAN	SOMAN	SOMAN
SUB-LOOPS																	
	Sub-Loop Distribution																
		Sub-Loop - Per Cross Box Location - CLEC Feeder Facility Set-Up	I		UEANL	USBSA		144.09	144.09								
		Sub-Loop - Per Cross Box Location - Per 25 Pair Panel Set-Up	I		UEANL	USBSB		10.99	10.99								
		Sub-Loop - Per Building Equipment Room - CLEC Feeder Facility Set-Up	I		UEANL	USBSC		86.16	86.16								
		Sub-Loop - Per Building Equipment Room - Per 25 Pair Panel Set-Up	I		UEANL	USBSD		27.13	27.13								
		Sub-Loop Distribution Per 2-Wire Analog Voice Grade Loop - Zone 1	I	1	UEANL	USBN2	7.57	63.89	30.06								
		Sub-Loop Distribution Per 2-Wire Analog Voice Grade Loop - Zone 2	I	2	UEANL	USBN2	12.75	63.89	30.06								
		Sub-Loop Distribution Per 2-Wire Analog Voice Grade Loop - Zone 3	I	3	UEANL	USBN2	21.45	63.89	30.06								
		Order Coordination for Unbundled Sub-Loops, per sub-loop pair			UEANL	USBMC		7.92	7.92								
		Sub-Loop Distribution Per 4-Wire Analog Voice Grade Loop - Zone 1		1	UEANL	USBN4	11.76	76.75	42.92								
		Sub-Loop Distribution Per 4-Wire Analog Voice Grade Loop - Zone 2		2	UEANL	USBN4	16.84	76.75	42.92								
		Sub-Loop Distribution Per 4-Wire Analog Voice Grade Loop - Zone 3		3	UEANL	USBN4	19.27	76.75	42.92								
		Order Coordination for Unbundled Sub-Loops, per sub-loop pair			UEANL	USBMC		7.92	7.92								
		Sub-Loop 2-Wire Intrabuilding Network Cable (INC)	I		UEANL	USBR2	2.91	51.48	17.65								
		Order Coordination for Unbundled Sub-Loops, per sub-loop pair			UEANL	USBMC		7.92	7.92								
		Sub-Loop 4-Wire Intrabuilding Network Cable (INC)	I		UEANL	USBR4	6.58	57.54	23.71								
		Order Coordination for Unbundled Sub-Loops, per sub-loop pair			UEANL	USBMC		7.92	7.92								
		Loop Testing - Basic 1st Half Hour			UEANL	URET1		33.17	33.17								
		Loop Testing - Basic Additional Half Hour			UEANL	URETA		19.28	19.28								
		2 Wire Copper Unbundled Sub-Loop Distribution - Zone 1	I	1	UEF	UCS2X	6.26	63.89	30.06								
		2 Wire Copper Unbundled Sub-Loop Distribution - Zone 2	I	2	UEF	UCS2X	10.07	63.89	30.06								
		2 Wire Copper Unbundled Sub-Loop Distribution - Zone 3	I	3	UEF	UCS2X	12.70	63.89	30.06								
		Order Coordination for Unbundled Sub-Loops, per sub-loop pair			UEF	USBMC		7.92	7.92								
		4 Wire Copper Unbundled Sub-Loop Distribution - Zone 1	I	1	UEF	UCS4X	8.03	76.75	42.92								
		4 Wire Copper Unbundled Sub-Loop Distribution - Zone 2	I	2	UEF	UCS4X	10.71	76.75	42.92								
		4 Wire Copper Unbundled Sub-Loop Distribution - Zone 3	I	3	UEF	UCS4X	6.08	76.75	42.92								
		Order Coordination for Unbundled Sub-Loops, per sub-loop pair			UEF	USBMC		7.92	7.92								
		Loop Testing - Basic 1st Half Hour			UEF	URET1		33.17	33.17								
		Loop Testing - Basic Additional Half Hour			UEF	URETA		19.28	19.28								
	Unbundled Network Terminating Wire (UNTW)																
		Unbundled Network Terminating Wire (UNTW) per Pair			UENTW	UENPP	0.3454	14.72	14.72								
	Network Interface Device (NID)																
		Network Interface Device (NID) - 1-2 lines			UENTW	UND12		42.26	27.83								
		Network Interface Device (NID) - 1-6 lines			UENTW	UND16		62.86	48.43								
		Network Interface Device Cross Connect - 2 W			UENTW	UNDC2		5.73	5.73								
		Network Interface Device Cross Connect - 4W			UENTW	UNDC4		5.73	5.73								
UNE OTHER, PROVISIONING ONLY - NO RATE																	
		NID - Dispatch and Service Order for NID installation			UENTW	UNDBX	0.00	0.00									
		UNTW Circuit Id Establishment, Provisioning Only - No Rate			UENTW	UENCE	0.00	0.00									
		Unbundled Contract Name, Provisioning Only - No Rate			UEANL,UEF,UEQ,UENTW	UNECN	0.00	0.00									
UNE OTHER, PROVISIONING ONLY - NO RATE																	

UNBUNDLED NETWORK ELEMENTS - Louisiana														Attachment: 2		Exhibit: A	
CATEGORY		RATE ELEMENTS	Interim	Zone	BCS	USOC	RATES ($)					Svc Order Submitted Elec per LSR	Svc Order Submitted Manually per LSR	Incremental Charge - Manual Svc Order vs. Electronic-1st	Incremental Charge - Manual Svc Order vs. Electronic-Add'l	Incremental Charge - Manual Svc Order vs. Electronic-Disc 1st	Incremental Charge - Manual Svc Order vs. Electronic-Disc Add'l
							Rec	Nonrecurring		Nonrecurring Disconnect		OSS Rates ($)					
								First	Add'l	First	Add'l	SOMEC	SOMAN	SOMAN	SOMAN	SOMAN	SOMAN
		Unbundled Contact Name, Provisioning Only - no rate			UAL,UCL,UDC,UDL, UDN,UEA,UHL,ULC	UNECN	0.00	0.00									
		Unbundled Sub-Loop Feeder-2 Wire Cross Box Jumper - no rate			UEA,UDN,UCL,UDC	USBFQ	0.00	0.00									
		Unbundled Sub-Loop Feeder-4 Wire Cross Box Jumper - no rate			UEA,USL,UCL,UDL	USBFR	0.00	0.00									
		Unbundled DS1 Loop - Superframe Format Option - no rate			USL	CCOSF	0.00	0.00									
		Unbundled DS1 Loop - Expanded Superframe Format option - no rate			USL	CCOEF	0.00	0.00									
HIGH CAPACITY UNBUNDLED LOCAL LOOP																	
		High Capacity Unbundled Local Loop - DS3 - Per Mile per month			UE3	1L5ND	10.04										
		High Capacity Unbundled Local Loop - DS3 - Facility Termination per month			UE3	UE3PX	362.34	438.46	256.30								
		High Capacity Unbundled Local Loop - STS-1 - Per Mile per month			UDLSX	1L5ND	10.04										
		High Capacity Unbundled Local Loop - STS-1 - Facility Termination per month			UDLSX	UDLS1	374.56	438.46	256.30								
LOOP MAKE-UP																	
		Loop Makeup - Preordering Without Reservation, per working or spare facility queried (Manual).			UMK	UMKLW		23.29	23.29								
		Loop Makeup - Preordering With Reservation, per spare facility queried (Manual).			UMK	UMKLP		24.70	24.70								
		Loop Makeup--With or Without Reservation, per working or spare facility queried (Mechanized)			UMK	UMKMQ		0.19	0.19								
LINE SHARING AND LINE SPLITTING																	
	NOTE 1: The Line Sharing monthly recurring rates for all installations completed from October 02, 2003 through midnight October 01, 2004 shall be billed as follows:																
	NOTE 1: 10/02/2003 – 10/01/2004: 25% of the rate for an unbundled copper loop non-designed ("UCLND")																
	NOTE 1: 10/02/2004 – 10/01/2005: 50% of the rate for UCLND																
	NOTE 1: 10/02/2005 – 10/01/2006: 75% of the rate for UCLND																
	NOTE 1: Above will apply to USOCS: ULSDT and ULSCT																
	****NOTE 2: The Line Sharing monthly recurring rates with USOCs ULSDC and ULSCC applies only to circuits installed and inservice on or before October 1, 2003**																
	LINE SHARING																
	SPLITTERS-CENTRAL OFFICE BASED																
		Line Sharing Splitter, per System 96 Line Capacity			ULS	ULSDA	187.17	183.33	0.00								
		Line Sharing Splitter, per System 24 Line Capacity			ULS	ULSDB	46.79	183.33	0.00								
		Line Sharing Splitter, Per System, 8 Line Capacity			ULS	ULSD8	15.59	183.33	0.00								
		Line Sharing-DLEC Owned Splitter in CO-CFA activaton-deactivation (per LSOD)			ULS	ULSDG		83.98	0.00								
	END USER ORDERING-CENTRAL OFFICE BASED LINE SHARING																
		Line Sharing - per Line Activation (BST Owned splitter) - OBSOLETE see **NOTE 2			ULS	ULSDC	0.61	17.97	10.29								
		Line Share Service, TRO per line activation, BST owned splitter - Central Office Located (25% of UCLND) - please see NOTE 1 (E:10/2/2003)			ULS	ULSDT	3.10	17.97	10.29								
		Line Share Service, TRO per line activation, BST owned splitter - Central Office Located (50% of UCLND) - please see NOTE 1 (E:10/2/2004)			ULS	ULSDT	6.20	17.97	10.29								
		Line Share Service, TRO per line activation, BST owned splitter - Central Office Located (75% of UCLND) - please see NOTE 1 (E:10/2/2005)			ULS	ULSDT	9.30	17.97	10.29								
		Line Sharing - per Subsequent Activity per Line Rearrangement(BST Owned Splitter)			ULS	ULSDS		15.91	7.95								
		Line Sharing - per Subsequent Activity per Line Rearrangement(DLEC Owned Splitter)			ULS	ULSCS		15.91	7.95								
		Line Sharing - per Line Activation (DLEC owned Splitter) - OBSOLETE see **NOTE 2			ULS	ULSCC	0.61	47.44	19.31								

UNBUNDLED NETWORK ELEMENTS - Louisiana														Attachment: 2		Exhibit: A	
CATEGORY		RATE ELEMENTS	Interim	Zone	BCS	USOC	RATES ($)					Svc Order Submitted Elec per LSR	Svc Order Submitted Manually per LSR	Incremental Charge - Manual Svc Order vs. Electronic-1st	Incremental Charge - Manual Svc Order vs. Electronic-Add'l	Incremental Charge - Manual Svc Order vs. Electronic-Disc 1st	Incremental Charge - Manual Svc Order vs. Electronic-Disc Add'l
							Rec	Nonrecurring		Nonrecurring Disconnect		OSS Rates ($)					
								First	Add'l	First	Add'l	SOMEC	SOMAN	SOMAN	SOMAN	SOMAN	SOMAN
		Line Share Service, TRO per line activation, CLEC owned splitter - Central Office Located (25% of UCLND) - please see NOTE 1 (E:10/2/2003)			ULS	ULSCT	3.10	47.44	19.31								
		Line Share Service, TRO per line activation, CLEC owned splitter - Central Office Located (50% of UCLND) - please see NOTE 1 (E:10/2/2004)			ULS	ULSCT	6.20	47.44	19.31								
		Line Share Service, TRO per line activation, CLEC owned splitter - Central Office Located (75% of UCLND) - please see NOTE 1 (E:10/2/2005)			ULS	ULSCT	9.30	47.44	19.31								
	LINE SPLITTING																
	END USER ORDERING-CENTRAL OFFICE BASED																
		Line Splitting - per line activation DLEC owned splitter			UEPSR UEPSB	UREOS	0.61										
		Line Splitting - per line activation BST owned - physical			UEPSR UEPSB	UREBP	0.61	17.97	10.29								
		Line Splitting - per line activation BST owned - virtual			UEPSR UEPSB	UREBV	0.61	17.97	10.29								
	MAINTENANCE																
		No Trouble Found - per 1/2 hour increments - Basic						80.00	55.00								
		No Trouble Found - per 1/2 hour increments - Overtime						120.00	82.50								
		No Trouble Found - per 1/2 hour increments - Premium						160.00	110.00								
UNBUNDLED DEDICATED TRANSPORT																	
	INTEROFFICE CHANNEL - DEDICATED TRANSPORT																
		Interoffice Channel - Dedicated Transport - 2-Wire Voice Grade - Per Mile per month			U1TVX	1L5XX	0.013										
		Interoffice Channel - Dedicated Transport- 2- Wire Voice Grade - Facility Termination			U1TVX	U1TV2	22.60	39.36	26.62								
		Interoffice Channel - Dedicated Transpor t- 2-Wire Voice Grade Rev Bat. - Per Mile per month			U1TVX	1L5XX	0.013										
		Interoffice Channel - Dedicated Transport- 2- Wire VG Rev Bat. - Facility Termination			U1TVX	U1TR2	22.60	39.36	26.62								
		Interoffice Channel - Dedicated Transport - 4-Wire Voice Grade - Per Mile per month			U1TVX	1L5XX	0.013										
		Interoffice Channel - Dedicated Transport - 4- Wire Voice Grade - Facility Termination			U1TVX	U1TV4	19.81	39.36	26.62								
		Interoffice Channel - Dedicated Transport - 56 kbps - per mile per month			U1TDX	1L5XX	0.013										
		Interoffice Channel - Dedicated Transport - 56 kbps - Facility Termination			U1TDX	U1TD5	15.61	39.37	26.62								
		Interoffice Channel - Dedicated Transport - 64 kbps - per mile per month			U1TDX	1L5XX	0.013										
		Interoffice Channel - Dedicated Transport - 64 kbps - Facility Termination			U1TDX	U1TD6	15.61	39.37	26.62								
		Interoffice Channel - Dedicated Channel - DS1 - Per Mile per month			U1TD1	1L5XX	0.2652										
		Interoffice Channel - Dedicated Tranport - DS1 - Facility Termination			U1TD1	U1TF1	70.47	86.69	79.44								
		Interoffice Channel - Dedicated Transport - DS3 - Per Mile per month			U1TD3	1L5XX	6.04										
		Interoffice Channel - Dedicated Transport - DS3 - Facility Termination per month			U1TD3	U1TF3	850.45	270.69	158.05								
		Interoffice Channel - Dedicated Transport - STS-1 - Per Mile per month			U1TS1	1L5XX	6.04										
		Interoffice Channel - Dedicated Transport - STS-1 - Facility Termination			U1TS1	U1TFS	830.19	270.69	158.05								
DARK FIBER																	
		Dark Fiber, Four Fiber Strands, Per Route Mile or Fraction Thereof per month - Interoffice Channel			UDF, UDFCX	1L5DF	25.28										
		NRC Dark Fiber - Interoffice Channel			UDF, UDFCX	UDF14		620.60	133.88								
		Dark Fiber, Four Fiber Strands, Per Route Mile or Fraction Thereof per month - Local Loop			UDF, UDFCX	1L5DL	52.23										
		NRC Dark Fiber - Local Loop			UDF, UDFCX	UDFL4		620.60	133.88								

UNBUNDLED NETWORK ELEMENTS - Louisiana													Attachment: 2		Exhibit: A	
CATEGORY		RATE ELEMENTS	Interim	Zone	BCS	USOC	RATES ($)					Svc Order Submitted Elec per LSR	Svc Order Submitted Manually per LSR	Incremental Charge - Manual Svc Order vs. Electronic-1st	Incremental Charge - Manual Svc Order vs. Electronic-Add'l	Incremental Charge - Manual Svc Order vs. Electronic-Disc 1st	Incremental Charge - Manual Svc Order vs. Electronic-Disc Add'l
							Rec	Nonrecurring		Nonrecurring Disconnect		OSS Rates ($)					
								First	Add'l	First	Add'l	SOMEC	SOMAN	SOMAN	SOMAN	SOMAN	SOMAN
8XX ACCESS TEN DIGIT SCREENING																	
		8XX Access Ten Digit Screening, Per Call			OHD		0.0006387										
		8XX Access Ten Digit Screening, Reservation Charge Per 8XX Number Reserved			OHD	N8R1X		2.51	0.43								
		8XX Access Ten Digit Screening, Per 8XX No. Established W/O POTS Translations			OHD			5.77	0.78								
		8XX Access Ten Digit Screening, Per 8XX No. Established With POTS Translations			OHD	N8FTX		5.77	0.78								
		8XX Access Ten Digit Screening, Customized Area of Service Per 8XX Number			OHD	N8FCX		2.51	1.26								
		8XX Access Ten Digit Screening, Multiple InterLATA CXR Routing Per CXR Requested Per 8XX No.			OHD	N8FMX		2.93	1.68								
		8XX Access Ten Digit Screening, Change Charge Per Request			OHD	N8FAX		2.93	0.43								
		8XX Access Ten Digit Screening, Call Handling and Destination Features			OHD	N8FDX		2.51									
		8XX Access Ten Digit Screening, w/ 8XX No. Delivery, per query			OHD		0.0006387										
		8XX Access Ten Digit Screening, w/ POTS No. Delivery, per query			OHD		0.0006387										
LINE INFORMATION DATA BASE ACCESS (LIDB)																	
		LIDB Common Transport Per Query			OQT		0.0000221										
		LIDB Validation Per Query			OQU		0.0135077										
		LIDB Originating Point Code Establishment or Change			OQT, OQU	NRBPX		33.33									
SIGNALING (CCS7)																	
		CCS7 Signaling Termination, Per STP Port			UDB	PT8SX	147.60										
		CCS7 Signaling Usage, Per TCAP Message			UDB		0.000064										
		CCS7 Signaling Connection, Per link (A link)			UDB	TPP++	15.77	34.50	34.50								
		CCS7 Signaling Connection, Per link (B link) (also known as D link)			UDB	TPP++	15.77	34.50	34.50								
		CCS7 Signaling Usage, Per ISUP Message			UDB		0.000016										
		CCS7 Signaling Usage Surrogate, per link per LATA			UDB	STU56	732.10										
		CCS7 Signaling Point Code, per Originating Point Code Establishment or Change, per STP affected			UDB	CCAPO		28.17	28.17								
		CCS7 Signaling Point Code, per Destination Point Code Establishment or Change, Per Stp Affected			UDB	CCAPD		28.17	28.17								
E911 SERVICE																	
		Local Channel - Dedicated - 2-wr Voice Grade - Zone 1					18.32	187.51	32.21								
		Local Channel - Dedicated - 2-wr Voice Grade - Zone 2					18.32	187.51	32.21								
		Local Channel - Dedicated - 2-wr Voice Grade - Zone 3					18.32	187.51	32.21								
		Interoffice Transport - Dedicated - 2-wr Voice Grade Per Mile					0.013										
		Interoffice Transport - Dedicated - 2-wr Voice Grade Per Facility Termination					22.60	39.36	26.62								
		Local Channel - Dedicated - DS1 - Zone 1					39.18	172.34	149.27								
		Local Channel - Dedicated - DS1 - Zone 2					121.58	172.34	149.27								
		Local Channel - Dedicated - DS1 - Zone 3					70.02	172.34	149.27								
		Interoffice Transport - Dedicated - DS1 Per Mile					0.2652										
		Interoffice Transport - Dedicated - DS1 Per Facility Termination					70.47	86.69	79.44								
CALLING NAME (CNAM) SERVICE																	
		CNAM For DB Owners - Service Establishment			OQV			22.29									
		CNAM For Non DB Owners - Service Establishment			OQV			22.29									
		CNAM For DB Owners - Service Provisioning With Point Code Establishment			OQV			962.22	711.64								
		CNAM For Non DB Owners - Service Provisioning With Point Code Establishment			OQV			332.43	238.05								
		CNAM for DB Owners, Per Query			OQV		0.0010217										
		CNAM for Non DB Owners, Per Query			OQV		0.0010217										
SELECTIVE ROUTING																	

UNBUNDLED NETWORK ELEMENTS - Louisiana														Attachment: 2		Exhibit: A	
CATEGORY		RATE ELEMENTS	Interim	Zone	BCS	USOC	RATES ($)					Svc Order Submitted Elec per LSR	Svc Order Submitted Manually per LSR	Incremental Charge - Manual Svc Order vs. Electronic-1st	Incremental Charge - Manual Svc Order vs. Electronic-Add'l	Incremental Charge - Manual Svc Order vs. Electronic-Disc 1st	Incremental Charge - Manual Svc Order vs. Electronic-Disc Add'l
							Rec	Nonrecurring		Nonrecurring Disconnect		OSS Rates ($)					
								First	Add'l	First	Add'l	SOMEC	SOMAN	SOMAN	SOMAN	SOMAN	SOMAN
		Selective Routing Per Unique Line Class Code Per Request Per Switch						82.25	82.25								
VIRTUAL COLLOCATION																	
		Virtual Collocation-2 Wire Cross Connects (Loop) for Line Splitting			UEPSR UEPSB	VE1LS	0.0296	11.94	11.46	0.00	0.00						
PHYSICAL COLLOCATION																	
		Physical Collocation-2 Wire Cross Connects (Loop) for Line Splitting			UEPSR UEPSB	PE1LS	0.0318	11.94	11.46	0.00	0.00						
AIN SELECTIVE CARRIER ROUTING																	
		Regional Service Establishment			UEBIB	SRCEC		100,209.33									
		End Office Establishment			UEBIB	SRCEO		164.29	164.29								
		Query NRC, per query			UEBIB		0.0030293										
AIN - BELLSOUTH AIN SMS ACCESS SERVICE																	
		AIN SMS Access Service - Service Establishment, Per State, Initial Setup			A1N	CAMSE		38.30	38.30								
		AIN SMS Access Service - Port Connection - Dial/Shared Access			A1N	CAMDP		7.60	7.60								
		AIN SMS Access Service - Port Connection - ISDN Access			A1N	CAM1P		7.60	7.60								
		AIN SMS Access Service - User Identification Codes - Per User ID Code			A1N	CAMAU		33.99	33.99								
		AIN SMS Access Service - Security Card, Per User ID Code, Initial or Replacement			A1N	CAMRC		41.39	41.39								
		AIN SMS Access Service - Storage, Per Unit (100 Kilobytes)					0.0022										
		AIN SMS Access Service - Session, Per Minute					0.5795										
		AIN SMS Access Service - Company Performed Session, Per Minute					0.8104										
AIN - BELLSOUTH AIN TOOLKIT SERVICE																	
		AIN Toolkit Service - Service Establishment Charge, Per State, Initial Setup			CAM	BAPSC		38.30	38.30								
		AIN Toolkit Service - Training Session, Per Customer				BAPVX		4,175.10	4,175.10								
		AIN Toolkit Service - Trigger Access Charge, Per Trigger, Per DN, Term. Attempt				BAPTT		7.60	7.60								
		AIN Toolkit Service - Trigger Access Charge, Per Trigger, Per DN, Off-Hook Delay				BAPTD		7.60	7.60								
		AIN Toolkit Service - Trigger Access Charge, Per Trigger, Per DN, Off-Hook Immediate				BAPTM		7.60	7.60								
		AIN Toolkit Service - Trigger Access Charge, Per Trigger, Per DN, 10-Digit PODP				BAPTO		33.47	33.47								
		AIN Toolkit Service - Trigger Access Charge, Per Trigger, Per DN, CDP				BAPTC		33.47	33.47								
		AIN Toolkit Service - Trigger Access Charge, Per Trigger, Per DN, Feature Code				BAPTF		33.47	33.47								
		AIN Toolkit Service - Query Charge, Per Query					0.0536446										
		AIN Toolkit Service - Type 1 Node Charge, Per AIN Toolkit Subscription, Per Node, Per Query					0.006569										
		AIN Toolkit Service - SCP Storage Charge, Per SMS Access Account, Per 100 Kilobytes					0.06										
		AIN Toolkit Service - Monthly report - Per AIN Toolkit Service Subscription			CAM	BAPMS	10.90	7.60	7.60								
		AIN Toolkit Service - Special Study - Per AIN Toolkit Service Subscription			CAM	BAPLS	2.80	8.41	8.41								
		AIN Toolkit Service - Call Event Report - Per AIN Toolkit Service Subscription			CAM	BAPDS	8.20	7.60	7.60								
		AIN Toolkit Service - Call Event Special Study - Per AIN Toolkit Service Subscription			CAM	BAPES	0.09	8.41	8.41								
ENHANCED EXTENDED LINK (EELs)																	
	NOTE: The monthly recurring and non-recurring charges below will apply and the Switch-As-Is Charge will not apply for UNE combinations provisioned as ' Ordinarily Combined' Network Elements.																
	NOTE: The monthly recurring and the Switch-As-Is Charge and not the non-recurring charges below will apply for UNE combinations provisioned as ' Currently Combined' Network Elements.																
	EXTENTED 2-WIRE VOICE GRADE EXTENDED LOOP WITH DEDICATED DS1 INTEROFFICE TRANSPORT																

UNBUNDLED NETWORK ELEMENTS - Louisiana														Attachment: 2		Exhibit: A	
CATEGORY		RATE ELEMENTS	Interim	Zone	BCS	USOC	RATES ($)					Svc Order Submitted Elec per LSR	Svc Order Submitted Manually per LSR	Incremental Charge - Manual Svc Order vs. Electronic-1st	Incremental Charge - Manual Svc Order vs. Electronic-Add'l	Incremental Charge - Manual Svc Order vs. Electronic-Disc 1st	Incremental Charge - Manual Svc Order vs. Electronic-Disc Add'l
							Rec	Nonrecurring		Nonrecurring Disconnect		OSS Rates ($)					
								First	Add'l	First	Add'l	SOMEC	SOMAN	SOMAN	SOMAN	SOMAN	SOMAN
		First 2-Wire VG Loop (SL2) in Combination - Zone 1		1	UNCVX	UEAL2	14.93	94.21	45.09								
		First 2-Wire VG Loop (SL2) in Combination - Zone 2		2	UNCVX	UEAL2	25.35	94.21	45.09								
		First 2-Wire VG Loop (SL2) in Combination - Zone 3		3	UNCVX	UEAL2	50.46	94.21	45.09								
		Interoffice Transport - Dedicated - DS1 combination - Per Mile per month			UNC1X	1L5XX	0.2652										
		Interoffice Transport - Dedicated - DS1 combination - Facility Termination per month			UNC1X	U1TF1	70.47	143.58	103.88								
		1/0 Channelization System in combination Per Month			UNC1X	MQ1	105.09	59.97	12.96								
		Voice Grade COCI - Per Month			UNCVX	1D1VG	0.6497	5.91	4.26								
		Each Additional 2-Wire VG Loop (SL 2) in Combination - Zone 1		1	UNCVX	UEAL2	14.93	94.21	45.09								
		Each Additional 2-Wire VG Loop (SL 2) in Combination - Zone 2		2	UNCVX	UEAL2	25.35	94.21	45.09								
		Each Additional 2-Wire VG Loop (SL 2) in Combination - Zone 3		3	UNCVX	UEAL2	50.46	94.21	45.09								
		Voice Grade COCI - Per Month			UNCVX	1D1VG	0.6497	5.91	4.26								
		Nonrecurring Currently Combined Network Elements Switch -As-Is Charge			UNC1X	UNCCC		5.43	5.43								
	EXTENDED 4-WIRE VOICE GRADE EXTENDED LOOP WITH DEDICATED DS1 INTEROFFICE TRANSPORT																
		First 4-Wire Analog Voice Grade Loop in Combination - Zone 1		1	UNCVX	UEAL4	30.81	94.21	45.09								
		First 4-Wire Analog Voice Grade Loop in Combination - Zone 2		2	UNCVX	UEAL4	38.32	94.21	45.09								
		First 4-Wire Analog Voice Grade Loop in Combination - Zone 3		3	UNCVX	UEAL4	60.39	94.21	45.09								
		Interoffice Transport - Dedicated - DS1 combination - Per Mile Per Month			UNC1X	1L5XX	0.2652										
		Interoffice Transport - Dedicated - DS1 - Facility Termination Per Month			UNC1X	U1TF1	70.47	143.58	103.88								
		1/0 Channel System in combination Per Month			UNC1X	MQ1	105.09	59.97	12.96								
		Voice Grade COCI in combination - per month			UNCVX	1D1VG	0.6497	5.91	4.26								
		Additional 4-Wire Analog Voice Grade Loop in same DS1 Interoffice Transport Combination - Zone 1		1	UNCVX	UEAL4	30.81	94.21	45.09								
		Additional 4-Wire Analog Voice Grade Loop in same DS1 Interoffice Transport Combination - Zone 2		2	UNCVX	UEAL4	38.32	94.21	45.09								
		Additional 4-Wire Analog Voice Grade Loop in same DS1 Interoffice Transport Combination - Zone 3		3	UNCVX	UEAL4	60.39	94.21	45.09								
		Additional Voice Grade COCI in combination - per month			UNCVX	1D1VG	0.6497	5.91	4.26								
		Nonrecurring Currently Combined Network Elements Switch -As-Is Charge			UNC1X	UNCCC		5.43	5.43								
	EXTENDED 4-WIRE 56 KBPS EXTENDED DIGITAL LOOP WITH DEDICATED DS1 INTEROFFICE TRANSPORT																
		First 4-Wire 56Kbps Digital Grade Loop in Combination - Zone 1		1	UNCDX	UDL56	30.99	94.21	45.09								
		First 4-Wire 56Kbps Digital Grade Loop in Combination - Zone 2		2	UNCDX	UDL56	36.78	94.21	45.09								
		First 4-Wire 56Kbps Digital Grade Loop in Combination - Zone 3		3	UNCDX	UDL56	38.92	94.21	45.09								
		Interoffice Transport - Dedicated - DS1 combination - Per Mile Per Month			UNC1X	1L5XX	0.2652										
		Interoffice Transport - Dedicated - DS1 - combination Facility Termination Per Month			UNC1X	U1TF1	70.47	143.58	103.88								
		1/0 Channel System in combination Per Month			UNC1X	MQ1	105.09	59.97	12.96								
		OCU-DP COCI (data) per month (2.4-64kbs)			UNCDX	1D1DD	1.38	5.91	4.26								
		Additional 4-Wire 56Kbps Digital Grade Loop in same DS1 Interoffice Transport Combination - Zone 1		1	UNCDX	UDL56	30.99	94.21	45.09								
		Additional 4-Wire 56Kbps Digital Grade Loop in same DS1 Interoffice Transport Combination - Zone 2		2	UNCDX	UDL56	36.78	94.21	45.09								
		Additional 4-Wire 56Kbps Digital Grade Loop in same DS1 Interoffice Transport Combination - Zone 3		3	UNCDX	UDL56	38.92	94.21	45.09								

CATEGORY	RATE ELEMENTS	Interim	Zone	BCS	USOC	RATES ($)					Svc Order Submitted Elec per LSR	Svc Order Submitted Manually per LSR	Attachment: 2 Incremental Charge - Manual Svc Order vs. Electronic-1st	Attachment: 2 Incremental Charge - Manual Svc Order vs. Electronic-Add'l	Exhibit: A Incremental Charge - Manual Svc Order vs. Electronic-Disc 1st	Exhibit: A Incremental Charge - Manual Svc Order vs. Electronic-Disc Add'l
						Rec	Nonrecurring		Nonrecurring Disconnect		OSS Rates ($)					
							First	Add'l	First	Add'l	SOMEC	SOMAN	SOMAN	SOMAN	SOMAN	SOMAN
	Additional OCU-DP COCI (data) - in combination per month (2.4-64kbs)			UNCDX	1D1DD	1.38	5.91	4.26								
	Nonrecurring Currently Combined Network Elements Switch -As-Is Charge			UNC1X	UNCCC		5.43	5.43								
	EXTENDED 4-WIRE 64 KBPS EXTENDED DIGITAL LOOP WITH DEDICATED DS1 INTEROFFICE TRANSPORT															
	First 4-Wire 64Kbps Digital Grade Loop in Combination - Zone 1		1	UNCDX	UDL64	30.99	94.21	45.09								
	First 4-Wire 64Kbps Digital Grade Loop in Combination - Zone 2		2	UNCDX	UDL64	36.78	94.21	45.09								
	First 4-Wire 64Kbps Digital Grade Loop in Combination - Zone 3		3	UNCDX	UDL64	38.92	94.21	45.09								
	Interoffice Transport - Dedicated - DS1 combination - Per Mile Per Month			UNC1X	1L5XX	0.2652										
	interoffice Transport - Dedicated - DS1 combination - Facility Termination Per Month			UNC1X	U1TF1	70.47	143.58	103.88								
	1/0 Channel System in combination Per Month			UNC1X	MQ1	105.09	59.97	12.96								
	OCU-DP COCI (data) - in combination - per month (2.4-64kbs)			UNCDX	1D1DD	1.38	5.91	4.26								
	Additional 4-Wire 64Kbps Digital Grade Loop in same DS1 Interoffice Transport Combination - Zone 1		1	UNCDX	UDL64	30.99	94.21	45.09								
	Additional 4-Wire 64Kbps Digital Grade Loop in same DS1 Interoffice Transport Combination - Zone 2		2	UNCDX	UDL64	36.78	94.21	45.09								
	Additional 4-Wire 64Kbps Digital Grade Loop in same DS1 Interoffice Transport Combination - Zone 3		3	UNCDX	UDL64	38.92	94.21	45.09								
	Additional OCU-DP COCI (data) - in combination - per month (2.4-64kbs)			UNCDX	1D1DD	1.38	5.91	4.26								
	Nonrecurring Currently Combined Network Elements Switch -As-Is Charge			UNC1X	UNCCC		5.43	5.43								
	EXTENDED 4-WIRE DS1 DIGITAL EXTENDED LOOP WITH DEDICATED DS1 INTEROFFICE TRANSPORT															
	4-Wire DS1 Digital Loop in Combination - Zone 1		1	UNC1X	USLXX	85.70	169.22	100.89								
	4-Wire DS1 Digital Loop in Combination - Zone 2		2	UNC1X	USLXX	194.96	169.22	100.89								
	4-Wire DS1 Digital Loop in Combination - Zone 3		3	UNC1X	USLXX	491.94	169.22	100.89								
	Interoffice Transport - Dedicated - DS1 combination - Per Mile Per Month			UNC1X	1L5XX	0.2652										
	Interoffice Transport - Dedicated - DS1 combination - Facility Termination Per Month			UNC1X	U1TF1	70.47	143.58	103.88								
	Nonrecurring Currently Combined Network Elements Switch -As-Is Charge			UNC1X	UNCCC		5.43	5.43								
	EXTENDED 4-WIRE DS1 DIGITAL EXTENDED LOOP WITH DEDICATED DS3 INTEROFFICE TRANSPORT															
	First DS1Loop in Combination - Zone 1		1	UNC1X	USLXX	85.70	169.22	100.89								
	First DS1Loop in Combination - Zone 2		2	UNC1X	USLXX	194.96	169.22	100.89								
	First DS1Loop in Combination - Zone 3		3	UNC1X	USLXX	491.94	169.22	100.89								
	Interoffice Transport - Dedicated - DS3 combination - Per Mile Per Month			UNC3X	1L5XX	6.04										
	Interoffice Transport - Dedicated - DS3 - Facility Termination per month			UNC3X	U1TF3	850.45	296.68	121.16								
	3/1Channel System in combination per month			UNC3X	MQ3	201.48	107.05	91.25								
	DS1 COCI in combination per month			UNC1X	UC1D1	11.78	5.91	4.26								
	Additional DS1Loop in DS3 Interoffice Transport Combination - Zone 1		1	UNC1X	USLXX	85.70	169.22	100.89								
	Additional DS1Loop in DS3 Interoffice Transport Combination - Zone 2		2	UNC1X	USLXX	194.96	169.22	100.89								
	Additional DS1Loop in DS3 Interoffice Transport Combination - Zone 3		3	UNC1X	USLXX	491.94	169.22	100.89								
	Additoinal DS1 COCI in combination per month			UNC1X	UC1D1	11.78	5.91	4.26								
	Nonrecurring Currently Combined Network Elements Switch -As-Is Charge			UNC3X	UNCCC		5.43	5.43								
	EXTENDED 2-WIRE VOICE GRADE EXTENDED LOOP/ 2 WIRE VOICE GRADE INTEROFFICE TRANSPORT															
	2-WireVG Loop in combination - Zone 1		1	UNCVX	UEAL2	14.93	94.21	45.09								
	2-WireVG Loop in combination - Zone 2		2	UNCVX	UEAL2	25.35	94.21	45.09								

CATEGORY	RATE ELEMENTS	Interim	Zone	BCS	USOC	RATES ($)					Svc Order Submitted Elec per LSR	Svc Order Submitted Manually per LSR	Attachment: 2 Incremental Charge - Manual Svc Order vs. Electronic-1st	Attachment: 2 Incremental Charge - Manual Svc Order vs. Electronic-Add'l	Exhibit: A Incremental Charge - Manual Svc Order vs. Electronic-Disc 1st	Exhibit: A Incremental Charge - Manual Svc Order vs. Electronic-Disc Add'l
						Rec	Nonrecurring		Nonrecurring Disconnect		OSS Rates ($)					
							First	Add'l	First	Add'l	SOMEC	SOMAN	SOMAN	SOMAN	SOMAN	SOMAN
	2-WireVG Loop in combination - Zone 3		3	UNCVX	UEAL2	50.46	94.21	45.09								
	Interoffice Transport - 2-wire VG - Dedicated- Per Mile Per Month			UNCVX	1L5XX	0.013										
	Interoffice Transport - 2-wire VG - Dedicated - Facility Termination per month			UNCVX	U1TV2	22.60	72.60	41.75								
	Nonrecurring Currently Combined Network Elements Switch -As-Is Charge			UNCVX	UNCCC		5.43	5.43								
	EXTENDED 4-WIRE VOICE GRADE EXTENDED LOOP/ 4 WIRE VOICE GRADE INTEROFFICE TRANSPORT															
	4-WireVG Loop in combination - Zone 1		1	UNCVX	UEAL4	30.81	94.21	45.09								
	4-WireVG Loop in combination - Zone 2		2	UNCVX	UEAL4	38.32	94.21	45.09								
	4-WireVG Loop in combination - Zone 3		3	UNCVX	UEAL4	60.39	94.21	45.09								
	Interoffice Transport - 4-wire VG - Dedicated - Per Mile Per Month			UNCVX	1L5XX	0.013										
	Interoffice Transport - 4-wire VG - Dedicated - Facility Termination per month			UNCVX	U1TV4	19.81	72.60	41.75								
	Nonrecurring Currently Combined Network Elements Switch -As-Is Charge			UNCVX	UNCCC		5.43	5.43								
	EXTENDED DS3 DIGITAL EXTENDED LOOP WITH DEDICATED DS3 INTEROFFICE TRANSPORT															
	DS3 Local Loop in combination - per mile per month			UNC3X	1L5ND	10.04										
	DS3 Local Loop in combination - Facility Termination per month			UNC3X	UE3PX	362.34	188.45	125.51								
	Interoffice Transport - Dedicated - DS3 - Per Mile per month			UNC3X	1L5XX	6.04										
	Interoffice Transport - Dedicated - DS3 combination - Facility Termination per month			UNC3X	U1TF3	850.45	296.68	121.16								
	Nonrecurring Currently Combined Network Elements Switch -As-Is Charge			UNC3X	UNCCC		5.43	5.43								
	EXTENDED STS-1 DIGITAL EXTENDED LOOP WITH DEDICATED STS-1 INTEROFFICE TRANSPORT															
	STS-1 Local Lolp in combination - per mile per month			UNCSX	1L5ND	10.04										
	STS-1 Local Loop in combination - Facility Termination per month			UNCSX	UDLS1	374.56	188.45	125.51								
	Interoffice Transport - Dedicated - STS-1 combination - per mile per month			UNCSX	1L5XX	6.04										
	Interoffice Transport - Dedicated - STS-1 combination - Facility Termination per month			UNCSX	U1TFS	830.19	296.68	121.16								
	Nonrecurring Currently Combined Network Elements Switch -As-Is Charge			UNCSX	UNCCC		5.43	5.43								
	EXTENDED 2-WIRE ISDN EXTENDED LOOP WITH DS1 INTEROFFICE TRANSPORT															
	First 2-Wire ISDN Loop in Combination - Zone 1		1	UNCNX	U1L2X	22.09	94.21	45.09								
	First 2-Wire ISDN Loop in Combination - Zone 2		2	UNCNX	U1L2X	35.28	94.21	45.09								
	First 2-Wire ISDN Loop in Combination - Zone 3		3	UNCNX	U1L2X	65.18	94.21	45.09								
	Interoffice Transport - Dedicated - DS1 combination - per mile per month			UNC1X	1L5XX	0.2652										
	Interoffice Transport - Dedicated - DS1 combination - Facility Termination per month			UNC1X	U1TF1	70.47	143.58	103.88								
	1/0 Channel System in combination - per month			UNC1X	MQ1	105.09	59.97	12.96								
	2-wire ISDN COCI (BRITE) - in combination - per month			UNCNX	UC1CA	2.96	5.91	4.26								
	Additional 2-wire ISDN Loop in same DS1Interoffice Transport Combination - Zone 1		1	UNCNX	U1L2X	22.09	94.21	45.09								
	Additional 2-wire ISDN Loop in same DS1Interoffice Transport Combination - Zone 2		2	UNCNX	U1L2X	35.28	94.21	45.09								
	Additional 2-wire ISDN Loop in same DS1Interoffice Transport Combination - Zone 3		3	UNCNX	U1L2X	65.18	94.21	45.09								
	Additional 2-wire ISDN COCI (BRITE) - in combination- per month			UNCNX	UC1CA	2.96	5.91	4.26								
	Nonrecurring Currently Combined Network Elements Switch -As-Is Charge			UNC1X	UNCCC		5.43	5.43								
	EXTENDED 4-WIRE DS1 DIGITAL EXTENDED LOOP WITH DEDICATED STS-1 INTEROFFICE TRANSPORT															
	First DS1 Loop Combination - Zone 1		1	UNC1X	USLXX	85.70	169.22	100.89								
	First DS1 Loop Combination - Zone 2		2	UNC1X	USLXX	194.96	169.22	100.89								

UNBUNDLED NETWORK ELEMENTS - Louisiana														Attachment: 2		Exhibit: A	
CATEGORY		RATE ELEMENTS	Interim	Zone	BCS	USOC	RATES ($)					Svc Order Submitted Elec per LSR	Svc Order Submitted Manually per LSR	Incremental Charge - Manual Svc Order vs. Electronic-1st	Incremental Charge - Manual Svc Order vs. Electronic-Add'l	Incremental Charge - Manual Svc Order vs. Electronic-Disc 1st	Incremental Charge - Manual Svc Order vs. Electronic-Disc Add'l
							Rec	Nonrecurring		Nonrecurring Disconnect		OSS Rates ($)					
								First	Add'l	First	Add'l	SOMEC	SOMAN	SOMAN	SOMAN	SOMAN	SOMAN
		First DS1 Loop Combination - Zone 3		3	UNC1X	USLXX	491.94	169.22	100.89								
		Interoffice Transport - Dedicated - STS-1 combination - Per Mile Per Month			UNCSX	1L5XX	6.04										
		Interoffice Transport - Dedicated - STS-1 combination - Facility Termination per month			UNCSX	U1TFS	830.19	296.68	121.16								
		3/1 Channel System in combination per month			UNCSX	MQ3	201.48	107.05	91.25								
		DS1 COCI in combination per month			UNC1X	UC1D1	11.78	5.91	4.26								
		Additional DS1Loop in the same STS-1 Interoffice Transport Combination - Zone 1		1	UNC1X	USLXX	85.70	169.22	100.89								
		Additional DS1Loop in the same STS-1 Interoffice Transport Combination - Zone 2		2	UNC1X	USLXX	194.96	169.22	100.89								
		Additional DS1Loop in the same STS-1 Interoffice Transport Combination - Zone 3		3	UNC1X	USLXX	491.94	169.22	100.89								
		DS1 COCI in combination per month			UNC1X	UC1D1	11.78	5.91	4.26								
		Nonrecurring Currently Combined Network Elements Switch -As-Is Charge			UNCSX	UNCCC		5.43	5.43								
	EXTENDED 4-WIRE 56 KBPS DIGITAL EXTENDED LOOP WITH 56 KBPS INTEROFFICE TRANSPORT																
		4-wire 56 kbps Local Loop in combination - Zone 1		1	UNCDX	UDL56	30.99	94.21	45.09								
		4-wire 56 kbps Local Loop in combination - Zone 2		2	UNCDX	UDL56	36.78	94.21	45.09								
		4-wire 56 kbps Local Loop in combination - Zone 3		3	UNCDX	UDL56	38.92	94.21	45.09								
		Interoffice Transport - Dedicated - 4-wire 56 kbps combination - Per Mile per month			UNCDX	1L5XX	0.013										
		Interoffice Transport - Dedicated - 4-wire 56 kbps combination - Facility Termination per month			UNCDX	U1TD5	15.61	72.60	41.75								
		Nonrecurring Currently Combined Network Elements Switch -As-Is Charge			UNCDX	UNCCC		5.43	5.43								
	EXTENDED 4-WIRE 64 KBPS DIGITAL EXTENDED LOOP WITH 64 KBPS INTEROFFICE TRANSPORT																
		4-wire 64 kbps Lcoal Loop in Combination - Zone 1		1	UNCDX	UDL64	30.99	94.21	45.09								
		4-wire 64 kbps Lcoal Loop in Combination - Zone 2		2	UNCDX	UDL64	36.78	94.21	45.09								
		4-wire 64 kbps Lcoal Loop in Combination - Zone 3		3	UNCDX	UDL64	38.92	94.21	45.09								
		Interoffice Transport - Dedicated - 4-wire 64 kbps combination - Per Mile per month			UNCDX	1L5XX	0.013										
		Interoffice Transport - Dedicated - 4-wire 64 kbps combination - Facility Termination per month			UNCDX	U1TD6	15.61	72.60	41.75								
		Nonrecurring Currently Combined Network Elements Switch -As-Is Charge			UNCDX	UNCCC		5.43	5.43								
	EXTENDED 2-WIRE VOICE GRADE LOOP WITH DS1 INTEROFFICE TRANSPORT w/ 3/1 MUX																
		First 2-wire VG Loop (SL2) in Combination - Zone 1		1	UNCVX	UEAL2	14.93	94.21	45.09								
		First 2-wire VG Loop (SL2) in Combination - Zone 2		2	UNCVX	UEAL2	25.35	94.21	45.09								
		First 2-wire VG Loop (SL2) in Combination - Zone 3		3	UNCVX	UEAL2	50.46	94.21	45.09								
		First Interoffice Transport - Dedicated - DS1 combination - Per Mile			UNC1X	1L5XX	0.2652										
		First Interoffice Transport - Dedicated - DS1 combination - Facility Termination per month			UNC1X	U1TF1	70.47	143.58	103.88								
		Per each DS1 Channelization System Per Month			UNC1X	MQ1	105.09	59.97	12.96								
		Per each Voice Grade COCI - Per Month per month			UNCVX	1D1VG	0.6497	5.91	4.26								
		3/1 Channel System in combination per month			UNC3X	MQ3	201.48	107.05	91.25								
		Per each DS1 COCI in combination per month			UNC1X	UC1D1	11.78	5.91	4.26								
		Each Additional 2-Wire VG Loop(SL 2) in the same DS1 Interoffice Transport Combination - Zone 1		1	UNCVX	UEAL2	14.93	94.21	45.09								
		Each Additional 2-Wire VG Loop(SL2) in the same DS1 Interoffice Transport Combination - Zone 2		2	UNCVX	UEAL2	25.35	94.21	45.09								
		Each Additional 2-Wire VG Loop(SL2) in the same DS1 Interoffice Transport Combination - Zone 3		3	UNCVX	UEAL2	50.46	94.21	45.09								
		Each Additional Voice Grade COCI in combination - per month			UNCVX	1D1VG	0.6497	5.91	4.26								
		Each Additional DS1 Interoffice Channel per mile in same 3/1 Channel System per month			UNC1X	1L5XX	0.2652										
		Each Additional DS1 Interoffice Channel Facility Termination in same 3/1 Channel System per month			UNC1X	U1TF1	70.47	143.58	103.88								

CATEGORY		RATE ELEMENTS	Interim	Zone	BCS	USOC	RATES ($)					Svc Order Submitted Elec per LSR	Svc Order Submitted Manually per LSR	Attachment: 2 Incremental Charge - Manual Svc Order vs. Electronic-1st	Attachment: 2 Incremental Charge - Manual Svc Order vs. Electronic-Add'l	Exhibit: A Incremental Charge - Manual Svc Order vs. Electronic-Disc 1st	Exhibit: A Incremental Charge - Manual Svc Order vs. Electronic-Disc Add'l
							Rec	Nonrecurring		Nonrecurring Disconnect		OSS Rates ($)					
								First	Add'l	First	Add'l	SOMEC	SOMAN	SOMAN	SOMAN	SOMAN	SOMAN
		Each Additional DS1 COCI combination per month			UNC1X	UC1D1	11.78	5.91	4.26								
		Nonrecurring Currently Combined Network Elements Switch -As-Is Charge			UNC1X	UNCCC		5.43	5.43								
	EXTENDED 4-WIRE VOICE GRADE LOOP WITH DEDICATED DS1 INTEROFFICE TRANSPORT w/ 3/1 MUX																
		First 4-Wire Analog Voice Grade Local Loop in Combination - Zone 1		1	UNCVX	UEAL4	30.81	94.21	45.09								
		First 4-Wire Analog Voice Grade Local Loop in Combination - Zone 2		2	UNCVX	UEAL4	38.32	94.21	45.09								
		First 4-Wire Analog Voice Grade Local Loop in Combination - Zone 3		3	UNCVX	UEAL4	60.39	94.21	45.09								
		First Interoffice Transport - Dedicated - DS1 combination - Per Mile Per Month			UNC1X	1L5XX	0.2652										
		First Interoffice Transport - Dedicated - DS1 - Facility Termination Per Month			UNC1X	U1TF1	70.47	143.58	103.88								
		Per each 1/0 Channel System in combination Per Month			UNC1X	MQ1	105.09	59.97	12.96								
		Per each Voice Grade COCI in combination - per month			UNCVX	1D1VG	0.6497	5.91	4.26								
		3/1 Channel System in combination per month			UNC3X	MQ3	201.48	107.05	91.25								
		Per each DS1 COCI in combination per month			UNC1X	UC1D1	11.78	5.91	4.26								
		Additional 4-Wire Analog Voice Grade Loop in same DS1 Interoffice Transport Combination - Zone 1		1	UNCVX	UEAL4	30.81	94.21	45.09								
		Additional 4-Wire Analog Voice Grade Loop in same DS1 Interoffice Transport Combination - Zone 2		2	UNCVX	UEAL4	38.32	94.21	45.09								
		Additional 4-Wire Analog Voice Grade Loop in same DS1 Interoffice Transport Combination - Zone 3		3	UNCVX	UEAL4	60.39	94.21	45.09								
		Each Additional DS1 Interoffice Channel per mile in same 3/1 Channel System per month			UNC1X	1L5XX	0.2652										
		Each Additional DS1 Interoffice Channel Facility Termination in same 3/1 Channel System per month			UNC1X	U1TF1	70.47	143.58	103.88								
		Additional Voice Grade COCI - in combination - per month			UNCVX	1D1VG	0.6497	5.91	4.26								
		Nonrecurring Currently Combined Network Elements Switch -As-Is Charge			UNC1X	UNCCC		5.43	5.43								
	EXTENDED 4-WIRE 56 KBPS DIGITAL LOOP WITH DEDICATED DS1 INTEROFFICE TRANSPORT w/ 3/1 MUX																
		First 4-Wire 56Kbps Digital Grade Local Loop in Combination - Zone 1		1	UNCDX	UDL56	30.99	94.21	45.09								
		First 4-Wire 56Kbps Digital Grade Local Loop in Combination - Zone 2		2	UNCDX	UDL56	36.78	94.21	45.09								
		First 4-Wire 56Kbps Digital Grade Local Loop in Combination - Zone 3		3	UNCDX	UDL56	38.92	94.21	45.09								
		First Interoffice Transport - Dedicated - DS1 combination - Per Mile Per Month			UNC1X	1L5XX	0.2652										
		First Interoffice Transport - Dedicated - DS1 - combination Facility Termination Per Month			UNC1X	U1TF1	70.47	143.58	103.88								
		Per each 1/0 Channel System in combination Per Month			UNC1X	MQ1	105.09	59.97	12.96								
		Per each OCU-DP COCI (data) COCI per month (2.4-64kbs)			UNCDX	1D1DD	1.38	5.91	4.26								
		3/1 Channel System in combination per month			UNC3X	MQ3	201.48	107.05	91.25								
		Per each DS1 COCI in combination per month			UNC1X	UC1D1	11.78	5.91	4.26								
		Additional 4-Wire 56Kbps Digital Grade Loop in same DS1 Interoffice Transport Combination - Zone 1		1	UNCDX	UDL56	30.99	94.21	45.09								
		Additional 4-Wire 56Kbps Digital Grade Loop in same DS1 Interoffice Transport Combination - Zone 2		2	UNCDX	UDL56	36.78	94.21	45.09								
		Additional 4-Wire 56Kbps Digital Grade Loop in same DS1 Interoffice Transport Combination - Zone 3		3	UNCDX	UDL56	38.92	94.21	45.09								
		OCU-DP COCI (data) COCI in combination per month (2.4-64kbs)			UNCDX	1D1DD	1.38	5.91	4.26								
		Each Additional DS1 Interoffice Channel per mile in same 3/1 Channel System per month			UNC1X	1L5XX	0.2652										
		Each Additional DS1 Interoffice Channel Facility Termination in same 3/1 Channel System per month			UNC1X	U1TF1	70.47	143.58	103.88								

CATEGORY		RATE ELEMENTS	Interim	Zone	BCS	USOC	RATES ($)					Svc Order Submitted Elec per LSR	Svc Order Submitted Manually per LSR	Attachment: 2 Incremental Charge - Manual Svc Order vs. Electronic-1st	Attachment: 2 Incremental Charge - Manual Svc Order vs. Electronic-Add'l	Exhibit: A Incremental Charge - Manual Svc Order vs. Electronic-Disc 1st	Exhibit: A Incremental Charge - Manual Svc Order vs. Electronic-Disc Add'l
							Rec	Nonrecurring		Nonrecurring Disconnect		OSS Rates ($)					
								First	Add'l	First	Add'l	SOMEC	SOMAN	SOMAN	SOMAN	SOMAN	SOMAN
		Each Additional DS1 COCI in the same 3/1 channel system combination per month			UNC1X	UC1D1	11.78	5.91	4.26								
		Nonrecurring Currently Combined Network Elements Switch -As-Is Charge			UNC1X	UNCCC		5.43	5.43								
	EXTENDED 4-WIRE 64 KBPS DIGITAL LOOP WITH DEDICATED DS1 INTEROFFICE TRANSPORT w/ 3/1 MUX																
		First 4-Wire 64Kbps Digital Grade Loop in a DS1 Interoffice Transport Combination - Zone 1		1	UNCDX	UDL64	30.99	94.21	45.09								
		First 4-Wire 64Kbps Digital Grade Loop in a DS1 Interoffice Transport Combination - Zone 2		2	UNCDX	UDL64	36.78	94.21	45.09								
		First 4-Wire 64Kbps Digital Grade Loop in a DS1 Interoffice Transport Combination - Zone 3		3	UNCDX	UDL64	38.92	94.21	45.09								
		First Interoffice Transport - Dedicated - DS1 combination - Per Mile Per Month			UNC1X	1L5XX	0.2652										
		First Interoffice Transport - Dedicated - DS1 combination - Facility Termination Per Month			UNC1X	U1TF1	70.47	143.58	103.88								
		Per each Channel System 1/0 in combination Per Month			UNC1X	MQ1	105.09	59.97	12.96								
		Per each OCU-DP COCI (data) in combination - per month (2.4-64kbs)			UNCDX	1D1DD	1.38	5.91	4.26								
		3/1 Channel System in combination per month			UNC3X	MQ3	201.48	107.05	91.25								
		Per each DS1 COCI in combination per month			UNC1X	UC1D1	11.78	5.91	4.26								
		Additional 4-Wire 64Kbps Digital Grade Loop in same DS1 Interoffice Transport Combination - Zone 1		1	UNCDX	UDL64	30.99	94.21	45.09								
		Additional 4-Wire 64Kbps Digital Grade Loop in same DS1 Interoffice Transport Combination - Zone 2		2	UNCDX	UDL64	36.78	94.21	45.09								
		Additional 4-Wire 64Kbps Digital Grade Loop in same DS1 Interoffice Transport Combination - Zone 3		3	UNCDX	UDL64	38.92	94.21	45.09								
		Additional OCU-DP COCI (data) - DS1 to DS0 Channel System combination - per month (2.4-64kbs)			UNCDX	1D1DD	1.38	5.91	4.26								
		Each Additional DS1 Interoffice Channel per mile in same 3/1 Channel System per month			UNC1X	1L5XX	0.2652										
		Each Additional DS1 Interoffice Channel Facility Termination in same 3/1 Channel System per month			UNC1X	U1TF1	70.47	143.58	103.88								
		Each Additional DS1 COCI in the same 3/1 channel system combination per month			UNC1X	UC1D1	11.78	5.91	4.26								
		Nonrecurring Currently Combined Network Elements Switch -As-Is Charge			UNC1X	UNCCC		5.43	5.43								
	EXTENDED 2-WIRE ISDN LOOP WITH DS1 INTEROFFICE TRANSPORT w/ 3/1 MUX																
		First 2-Wire ISDN Loop in a DS1 Interoffice Combination Transport - Zone 1		1	UNCNX	U1L2X	22.09	94.21	45.09								
		First 2-Wire ISDN Loop in a DS1 Interoffice Combination Transport - Zone 2		2	UNCNX	U1L2X	35.28	94.21	45.09								
		First 2-Wire ISDN Loop in a DS1 Interoffice Combination Transport - Zone 3		3	UNCNX	U1L2X	65.18	94.21	45.09								
		First Interoffice Transport - Dedicated - DS1 combination - Per Mile per month			UNC1X	1L5XX	0.2652										
		First Interoffice Transport - Dedicated - DS1 combination - Facility Termination per month			UNC1X	U1TF1	70.47	143.58	103.88								
		Per each Channel System 1/0 in combination - per month			UNC1X	MQ1	105.09	59.97	12.96								
		Per each 2-wire ISDN COCI (BRITE) in combination - per month			UNCNX	UC1CA	2.96	5.91	4.26								
		3/1 Channel System in combination per month			UNC3X	MQ3	201.48	107.05	91.25								
		Per each DS1 COCI in combination per month			UNC1X	UC1D1	11.78	5.91	4.26								
		Additional 2-wire ISDN Loop in same DS1Interoffice Transport Combination - Zone 1		1	UNCNX	U1L2X	22.09	94.21	45.09								
		Additional 2-wire ISDN Loop in same DS1Interoffice Transport Combination - Zone 2		2	UNCNX	U1L2X	35.28	94.21	45.09								
		Additional 2-wire ISDN Loop in same DS1Interoffice Transport Combination - Zone 3		3	UNCNX	U1L2X	65.18	94.21	45.09								

UNBUNDLED NETWORK ELEMENTS - Louisiana														Attachment: 2		Exhibit: A	
CATEGORY		RATE ELEMENTS	Interim	Zone	BCS	USOC	RATES ($)					Svc Order Submitted Elec per LSR	Svc Order Submitted Manually per LSR	Incremental Charge - Manual Svc Order vs. Electronic-1st	Incremental Charge - Manual Svc Order vs. Electronic-Add'l	Incremental Charge - Manual Svc Order vs. Electronic-Disc 1st	Incremental Charge - Manual Svc Order vs. Electronic-Disc Add'l
							Rec	Nonrecurring		Nonrecurring Disconnect		OSS Rates ($)					
								First	Add'l	First	Add'l	SOMEC	SOMAN	SOMAN	SOMAN	SOMAN	SOMAN
		Additional 2-wire ISDN COCI (BRITE) in same 1/0 channel system combination- per month			UNCNX	UC1CA	2.96	5.91	4.26								
		Each Additional DS1 Interoffice Channel per mile in same 3/1 Channel System per month			UNC1X	1L5XX	0.2652										
		Each Additional DS1 Interoffice Channel Facility Termination in same 3/1 Channel System per month			UNC1X	U1TF1	70.47	143.58	103.88								
		Each Additional DS1 COCI in the same 3/1 channel system combination per month			UNC1X	UC1D1	11.78	5.91	4.26								
		Nonrecurring Currently Combined Network Elements Switch -As-Is Charge			UNC1X	UNCCC		5.43	5.43								
	EXTENDED 4-WIRE DS1 LOOP WITH DEDICATED DS1 INTEROFFICE TRANSPORT w/ 3/1 MUX																
		First 4-wire DS1 Digital Lcoal Loop in Combination - Zone 1		1	UNC1X	USLXX	85.70	169.22	100.89								
		First 4-wire DS1 Digital Lcoal Loop in Combination - Zone 2		2	UNC1X	USLXX	194.96	169.22	100.89								
		First 4-wire DS1 Digital Lcoal Loop in Combination - Zone 3		3	UNC1X	USLXX	491.94	169.22	100.89								
		First Interoffice Transport - Dedicated - DS1 combination - Per Mile Per Month			UNC1X	1L5XX	0.2652										
		First Interoffice Transport - Dedicated - DS1 combination - Facility Termination Per Month			UNC1X	U1TF1	70.47	143.58	103.88								
		3/1 Channel System in combination per month			UNC3X	MQ3	201.48	107.05	91.25								
		Per each DS1 COCI combination per month			UNC1X	UC1D1	11.78	5.91	4.26								
		Each Additional DS1 Interoffice Channel per mile in same 3/1 Channel System per month			UNC1X	1L5XX	0.2652										
		Each Additional DS1 Interoffice Channel Facility Termination in same 3/1 Channel System per month			UNC1X	U1TF1	70.47	143.58	103.88								
		Each Additional DS1 COCI in the same 3/1 channel system combination per month			UNC1X	UC1D1	11.78	5.91	4.26								
		Additional 4-Wire DS1 Digital Local Loop in Combination - Zone 1		1	UNC1X	USLXX	85.70	169.22	100.89								
		Additional 4-Wire DS1 Digital Local Loop in Combination - Zone 2		2	UNC1X	USLXX	194.96	169.22	100.89								
		Additional 4-Wire DS1 Digital Local Loop in Combination - Zone 3		3	UNC1X	USLXX	491.94	169.22	100.89								
		Nonrecurring Currently Combined Network Elements Switch -As-Is Charge			UNC1X	UNCCC		5.43	5.43								
	EXTENDED 4-WIRE 56 KBPS DIGITAL EXTENDED LOOP WITH DS0 INTEROFFICE TRANSPORT																
		First 4-wire 56 kbps Local Loop in combination - Zone 1		1	UNCDX	UDL56	30.99	94.21	45.09								
		First 4-wire 56 kbps Local Loop in combination - Zone 2		2	UNCDX	UDL56	36.78	94.21	45.09								
		First 4-wire 56 kbps Local Loop in combination - Zone 3		3	UNCDX	UDL56	38.92	94.21	45.09								
		First 4-wiree 56 kbps Interoffice Transport - Dedicated - Per Mile per month			UNCDX	1L5XX	0.013										
		First 4-wire 56 kbps Interoffice Transport - Dedicated - Facility Termination per month			UNCDX	U1TD5	15.61	72.60	41.75								
		Nonrecurring Currently Combined Network Elements Switch -As-Is Charge			UNCDX	UNCCC		5.43	5.43								
	EXTENDED 4-WIRE 64 KBPS DIGITAL EXTENDED LOOP WITH DS0 INTEROFFICE TRANSPORT																
		First 4-wire 64 kbps Local Loop in combination - Zone 1		1	UNCDX	UDL64	30.99	94.21	45.09								
		First 4-wire 64 kbps Local Loop in combination - Zone 2		2	UNCDX	UDL64	36.78	94.21	45.09								
		First 4-wire 64 kbps Local Loop in combination - Zone 3		3	UNCDX	UDL64	38.92	94.21	45.09								
		First l4-wire 65 kbps Interoffice Transport - Dedicated - Per Mile per month			UNCDX	1L5XX	0.013										
		First 4-wire 64 kbps Interoffice Transport - Dedicated - Facility Termination per month			UNCDX	U1TD6	15.61	72.60	41.75								
		Nonrecurring Currently Combined Network Elements Switch -As-Is Charge			UNCDX	UNCCC		5.43	5.43								
ADDITIONAL NETWORK ELEMENTS																	
	When used as a part of a currently combined facility, the non-recurrng charges do not apply, but a Switch As Is charge does apply.																
	When used as ordinarily combined network elements in All States, the non-recurring charges apply and the Switch As Is Charge does not.																
	Nonrecurring Currently Combined Network Elements "Switch As Is" Charge (One applies to each combination)																

UNBUNDLED NETWORK ELEMENTS - Louisiana														Attachment: 2		Exhibit: A	
CATEGORY		RATE ELEMENTS	Interim	Zone	BCS	USOC	RATES ($)					Svc Order Submitted Elec per LSR	Svc Order Submitted Manually per LSR	Incremental Charge - Manual Svc Order vs. Electronic-1st	Incremental Charge - Manual Svc Order vs. Electronic-Add'l	Incremental Charge - Manual Svc Order vs. Electronic-Disc 1st	Incremental Charge - Manual Svc Order vs. Electronic-Disc Add'l
							Rec	Nonrecurring		Nonrecurring Disconnect		OSS Rates ($)					
								First	Add'l	First	Add'l	SOMEC	SOMAN	SOMAN	SOMAN	SOMAN	SOMAN
		Nonrecurring Currently Combined Network Elements Switch -As-Is Charge - 2 wire/4-Wire VG			UNCVX	UNCCC		5.43	5.43								
		Nonrecurring Currently Combined Network Elements Switch -As-Is Charge - 56/64 kbps			UNCDX	UNCCC		5.43	5.43								
		Nonrecurring Currently Combined Network Elements Switch -As-Is Charge - DS1			UNC1X	UNCCC		5.43	5.43								
		Nonrecurring Currently Combined Network Elements Switch -As-Is Charge - DS3			UNC3X	UNCCC		5.43	5.43								
		Nonrecurring Currently Combined Network Elements Switch -As-Is Charge - STS1			UNCSX	UNCCC		5.43	5.43								
	Optional Features & Functions:																
		Clear Channel Capability Extended Frame Option - per DS1	I		U1TD1, ULDD1,UNC1X	CCOEF		0I	0I	0I	0I						
		Clear Channel Capability Super FrameOption - per DS1	I		U1TD1, ULDD1,UNC1X	CCOSF		0I	0I	0I	0I						
		Clear Channel Capability (SF/ESF) Option - Subsequent Activity - per DS1	I		ULDD1, U1TD1, UNC1X, USL	NRCCC		184.65S	23.79S	1.97S	0.77S						
		C-bit Parity Option - Subsequent Activity - per DS3	i		U1TD3, ULDD3, UE3, UNC3X	NRCC3		218.78S	7.66S	.7263S	0S						
	MULTIPLEXERS																
		DS1 to DS0 Channel System per month			UNC1X	MQ1	105.09	59.97	12.96								
		OCU-DP COCI (data) - DS1 to DS0 Channel System - per month (2.4-64kbs) used for a Local Loop			UDL	1D1DD	1.38	6.39	4.58								
		OCU-DP COCI (data) - DS1 to DS0 Channel System - per month (2.4-64kbs) used for connection to a channelized DS1 Local Channel in the same SWC as collocation			U1TUD	1D1DD	1.38	6.39	4.58								
		2-wire ISDN COCI (BRITE) - DS1 to DS0 Channel Systsem - per month for a Local Loop			UDN	UC1CA	2.96	6.39	4.58								
		2-wire ISDN COCI (BRITE) - DS1 to DS0 Channel Systsem - per month used for connection to a channelized DS1 Local Channel in the same SWC as collocation			U1TUB	UC1CA	2.96	6.39	4.58								
		Voice Grade COCI - DS1 to DS0 Channel System - per month used for a Local Loop			UEA	1D1VG	0.6497	6.39	4.58								
		Voice Grade COCI - DS1 to DS0 Channel System - per month used for connection to a channelized DS1 Local Channel in the same SWC as collocation			U1TUC	1D1VG	0.6497	6.39	4.58								
		DS3 to DS1 Channel System per month			UNC3X	MQ3	201.48	107.05	91.25								
		STS-1 to DS1 Channel System per month			UNCSX	MQ3	201.48	107.05	91.25								
		DS1 COCI used with Loop per month			USL	UC1D1	11.78	6.39	4.58								
		DS1 COCI (used for connection to a channelized DS1 Local Channel in the same SWC as collocation) per month			U1TUA	UC1D1	11.78	6.39	4.58								
		DS1 COCI used with Interoffice Channel per month			U1TD1	UC1D1	11.78	6.39	4.58								
		DS3 Interface Unit (DS1 COCI) used with Local Channel per month			ULDD1	UC1D1	11.78	6.39	4.58								
UNBUNDLED LOCAL EXCHANGE SWITCHING(PORTS)																	
	Exchange Ports																
	NOTE: Although the Port Rate includes all available features in GA, KY, LA & TN, the desired features will need to be ordered using retail USOCs																
	2-WIRE VOICE GRADE LINE PORT RATES (RES)																
		Exchange Ports - 2-Wire Analog Line Port- Res.			UEPSR	UEPRL	1.52	2.31	2.21								
		Exchange Ports - 2-Wire Analog Line Port with Caller ID - Res.			UEPSR	UEPRC	1.52	2.31	2.21								
		Exchange Ports - 2-Wire Analog Line Port outgoing only - Res.			UEPSR	UEPRO	1.52	2.31	2.21								
		Exchange Ports - 2-Wire VG unbundled LA extended local dialing parity Port with Caller ID - Res.			UEPSR	UEPAS	1.52	2.31	2.21								
		Exchange Ports - 2-Wire VG unbundled Louisiana Area Plus with Caller ID - Res (RUL)			UEPSR	UEPAG	1.52	2.31	2.21								
		Exchange Ports - 2-Wire VG unbundled res, low usage line port with Caller ID (LUM)			UEPSR	UEPAP	1.52	2.31	2.21								

UNBUNDLED NETWORK ELEMENTS - Louisiana														Attachment: 2		Exhibit: A	
CATEGORY		RATE ELEMENTS	Interim	Zone	BCS	USOC	RATES ($)					Svc Order Submitted Elec per LSR	Svc Order Submitted Manually per LSR	Incremental Charge - Manual Svc Order vs. Electronic-1st	Incremental Charge - Manual Svc Order vs. Electronic-Add'l	Incremental Charge - Manual Svc Order vs. Electronic-Disc 1st	Incremental Charge - Manual Svc Order vs. Electronic-Disc Add'l
							Rec	Nonrecurring		Nonrecurring Disconnect		OSS Rates ($)					
								First	Add'l	First	Add'l	SOMEC	SOMAN	SOMAN	SOMAN	SOMAN	SOMAN
		Exchange Ports - 2-Wire VG Louisiana Residence Dialing Plan without Caller ID			UEPSR	UEPWG	1.52	2.31	2.21								
		Exchange Ports - 2-Wire VG Louisiana Residence Area Plus without Caller ID			UEPSR	UEPRQ	1.52	2.31	2.21								
		2-Wire voice unbundled Low Usage Line Port without Caller ID Capability			UEPSR	UEPRT	1.52	2.31	2.21								
		Subsequent Activity			UEPSR	USASC	0.00	0.00	0.00								
	FEATURES																
		All Available Vertical Features			UEPSR	UEPVF	0.00	0.00	0.00								
	2-WIRE VOICE GRADE LINE PORT RATES (BUS)																
		Exchange Ports - 2-Wire Analog Line Port without Caller ID - Bus			UEPSB	UEPBL	1.52	2.31	2.21								
		Exchange Ports - 2-Wire VG unbundled Line Port with unbundled port with Caller+E484 ID - Bus.			UEPSB	UEPBC	1.52	2.31	2.21								
		Exchange Ports - 2-Wire Analog Line Port outgoing only - Bus.			UEPSB	UEPBO	1.52	2.31	2.21								
		Exchange Ports - 2-Wire VG unbundled LA extended local dialing parity Port with Caller ID - Bus.			UEPSB	UEPAX	1.52	2.31	2.21								
		Exhange Ports - 2-Wire VG unbundled incoming only port with Caller ID - Bus			UEPSB	UEPB1	1.52	2.31	2.21								
		Exchange Ports - 2-Wire VG unbundled Louisiana Bus Area Calling Port with Caller ID - Bus (BUC)			UEPSB	UEPAA	1.52	2.31	2.21								
		Exchange Ports - 2-Wire Voice Louisiana Business Dialing Plan without Caller ID			UEPSB	UEPWH	1.52	2.31	2.21								
		Exchange Ports - 2-Wire Voice Louisiana Business Area Calling Port without Caller ID			UEPSB	UEPBA	1.52	2.31	2.21								
		2-Wire voice unbundled Incoming Only Port without Caller ID Capability			UEPSB	UEPBE	1.52	2.31	2.21								
		Subsequent Activity			UEPSB	USASC	0.00	0.00	0.00								
	FEATURES																
		All Available Vertical Features			UEPSB	UEPVF	0.00	0.00	0.00								
	EXCHANGE PORT RATES (DID & PBX)																
		2-Wire VG Unbundled 2-Way PBX Trunk - Res			UEPSE	UEPRD	1.52	30.37	14.42								
		2-Wire VG Line Side Unbundled 2-Way PBX Trunk - Bus			UEPSP	UEPPC	1.52	30.37	14.42								
		2-Wire VG Line Side Unbundled Outward PBX Trunk - Bus			UEPSP	UEPPO	1.52	30.37	14.42								
		2-Wire VG Line Side Unbundled Incoming PBX Trunk - Bus			UEPSP	UEPP1	1.52	30.37	14.42								
		2-Wire Analog Long Distance Terminal PBX Trunk - Bus			UEPSP	UEPLD	1.52	30.37	14.42								
		2-Wire Voice Unbundled 2-Way PBX Louisiana Calling Port			UEPSP	UEPL2	1.52	30.37	14.42								
		2-Wire Voice Unbundled PBX LD Terminal Ports			UEPSP	UEPLD	1.52	30.37	14.42								
		2-Wire Vice Unbundled 2-Way PBX Usage Port			UEPSP	UEPXA	1.52	30.37	14.42								
		2-Wire Voice Unbundled PBX Toll Terminal Hotel Ports			UEPSP	UEPXB	1.52	30.37	14.42								
		2-Wire Voice Unbundled PBX LD DDD Terminals Port			UEPSP	UEPXC	1.52	30.37	14.42								
		2-Wire Voice Unbundled PBX LD Terminal Switchboard Port			UEPSP	UEPXD	1.52	30.37	14.42								
		2-Wire Voice Unbundled PBX LD Terminal Switchboard IDD Capable Port			UEPSP	UEPXE	1.52	30.37	14.42								
		2-Wire Voice Unbundled 2-Way PBX Louisiana Local Optional Callling Port			UEPSP	UEPXK	1.52	30.37	14.42								
		2-Wire Voice Unbundled 2-Way PBX Hotel/Hospital Economy Administrative Calling Port			UEPSP	UEPXL	1.52	30.37	14.42								
		2-Wire Voice Unbundled 2-Way PBX Hotel/Hospital Economy Room Calling Port			UEPSP	UEPXM	1.52	30.37	14.42								
		2-Wire Voice Unbundled 1-Way Outgoing PBX Hotel/Hospital Discount Room Calling Port			UEPSP	UEPXO	1.52	30.37	14.42								
		2-Wire Voice Unbundled 1-Way Outgoing PBX Louisiana Local Discount Calling Port			UEPSP	UEPXP	1.52	30.37	14.42								
		2-Wire Voice Unbundled 1-Way Outgoing PBX Measured Port			UEPSP	UEPXS	1.52	30.37	14.42								
		Subsequent Activity			UEPSP	USASC	0.00	0.00	0.00								
	FEATURES																
		All Available Vertical Features			UEPSP UEPSE	UEPVF	0.00	0.00	0.00								

UNBUNDLED NETWORK ELEMENTS - Louisiana														Attachment: 2		Exhibit: A	
CATEGORY	RATE ELEMENTS	Interim	Zone	BCS	USOC	RATES ($)					Svc Order Submitted Elec per LSR	Svc Order Submitted Manually per LSR	Incremental Charge - Manual Svc Order vs. Electronic-1st	Incremental Charge - Manual Svc Order vs. Electronic-Add'l	Incremental Charge - Manual Svc Order vs. Electronic-Disc 1st	Incremental Charge - Manual Svc Order vs. Electronic-Disc Add'l
						Rec	Nonrecurring		Nonrecurring Disconnect		OSS Rates ($)					
							First	Add'l	First	Add'l	SOMEC	SOMAN	SOMAN	SOMAN	SOMAN	SOMAN
	EXCHANGE PORT RATES (COIN)															
	Exchange Ports - Coin Port					1.52	2.31	2.21								
	NOTE: Transmission/usage charges associated with POTS circuit switched usage will also apply to circuit switched voice and/or circuit switched data transmission by B-Channels associated with 2-wire ISDN ports.															
	NOTE: Access to B Channel or D Channel Packet capabilities will be available only through BFR/New Business Request Process. Rates for the packet capabilities will be determined via the Bona Fide Request/New Business Request Process.															
UNBUNDLED LOCAL EXCHANGE SWITCHING(PORTS)																
	EXCHANGE PORT RATES															
	The DS1 Port rates below for 4-Wire DDITS Trunk Port and 4-Wire ISDN Port in this rate exhibit apply to the embedded base in place as of 10/2/03 until 4/1/04. After 4/1/04 these rates shall revert to tariff rates or a separate agreement.															
	Requests for 4-Wire DDITS Trunk Ports with 4-Wire ISDN DS1 Ports after the effective date of this amendment shall be provided pursuant to a separate agreement or tariff at BellSouth's discretion.															
	Exchange Ports - 2-Wire DID Port			UEPEX	UEPP2	8.29	115.85	18.20								
	Exchange Ports - DDITS Port - 4-Wire DS1 Port with DID capability (E:4/1/2004)			UEPDD	UEPDD	68.47	196.18	92.92								
	Exchange Ports - 2-Wire ISDN Port (See Notes below.)			UEPTX, UEPSX	U1PMA	10.07	70.76	51.46								
	All Features Offered			UEPTX, UEPSX	UEPVF	0.00	0.00	0.00								
	Exchange Ports - 2-Wire ISDN Port -- Channel Profiles			UEPTX, UEPSX	U1UMA	0.00	0.00	0.00								
	NOTE: Transmission/usage charges associated with POTS circuit switched usage will also apply to circuit switched voice and/or circuit switched data transmission by B-Channels associated with 2-wire ISDN ports.															
	NOTE: Access to B Channel or D Channel Packet capabilities will be available only through BFR/New Business Request Process. Rates for the packet capabilities will be determined via the Bona Fide Request/New Business Request Process.															
	EXCHANGE PORT RATES (continued)															
	Exchange Ports - 4-Wire ISDN DS1 Port with Detailed E911 Locator Capability (E:4/1/2004)			UEPEX	UEPEX	94.82	197.92	98.62								
	Exchange Ports - 4-Wire ISDN DS1 Port (E:4/1/2004)			UEPDX	UEPDX	94.82	197.92	98.62								
	Physical Collocation - DS1 Cross-Connects			UEPEX UEPDX	PE1P1	1.04	21.39	15.47								
	Virtual collocation - Special Access & UNE, cross-connect per DS1			UEPEX UEPDX	CNC1X	1.04	21.39	15.47								
	Detailed E911 with Locator Capability (required with UEPEX port)															
	Unbundled Exchange Ports, 4-Wire ISDN DS1 Port - E911 Locator Capability - Initial Profile Establishment per CLEC per State			UEPEX	UEP1A	0.00	1,792.00									
	Unbundled Exchange Ports, 4-Wire ISDN DS1 Port - E911 Locator Capability - Subsequent Profile Changes, Additions, Deletions			UEPEX	UEP1B	0.00	174.03									
	New or Additional PRI Telephone Numbers															
	Unbundled Exchange Ports, 4-Wire ISDN DS1 Port - E911 Locator Capability 2-way Telephone Numbers, per number in E911 profile [New or Additional]			UEPEX	UEP1C	0.0692	0.48									
	Unbundled Exchange Ports, 4-Wire ISDN DS1 Port - E911 Locator Capability - Outdial Telephone Numbers, per number in E911 profile [New or Additional]			UEPEX	UEP1D	0.0692	11.18	11.18								
	Unbundled Exchange Ports, 4-Wire ISDN DS1 Port - Inward Telephone Numbers - Inward Data Only Option [New or Additional]			UEPDX	UEP1E	0.00	0.48									
	Exchange Ports - 4-Wire ISDN DS1 Port - Subsequent [New] Inward Tel Numbers [Customer Testing Purposes]			UEPEX	PR7ZT	0.00	22.35	22.35								
	LOCAL NUMBER PORTABILITY															
	Local Number Portability (1 per port)			UEPEX UEPDX	LNPCN	1.75										
	INTERFACE (Provsioning Only)															
	Voice/Data			UEPEX	PR71V	0.00	0.00	0.00								
	Digital Data			UEPEX	PR71D	0.00	0.00	0.00								
	Inward Data			UEPDX	PR71E	0.00	0.00	0.00								
	New or Additional Channel															
	New or Additional - Voice/Data "B" Channel			UEPEX	PR7BV	0.00	14.11									
	New or Additional - Digital Data "B" Channel			UEPEX	PR7BF	0.00	14.11									
	New or Additional Inward Data "B" Channel			UEPDX	PR7BD	0.00	14.11									
	New or Additional Useage Sensitive Voice Data "B" Channel			UEPEX	PR7BS	0.00	14.11									
	New or Additional Useage Sensitive Digital Data "B" Channel			UEPEX	PR7BU	0.00	14.11									
	New or Additional PRI "D" Channel			UEPEX	PR7EX	0.00	14.11									
	CALL TYPES															
	Inward			UEPEX UEPDX	PR7C1	0.00	0.00	0.00								
	Outward			UEPEX	PR7CO	0.00	0.00	0.00								
	Two-way			UEPEX	PR7CC	0.00	0.00	0.00								

UNBUNDLED NETWORK ELEMENTS - Louisiana														Attachment: 2		Exhibit: A	
CATEGORY	RATE ELEMENTS	Interim	Zone	BCS	USOC	RATES ($)					Svc Order Submitted Elec per LSR	Svc Order Submitted Manually per LSR	Incremental Charge - Manual Svc Order vs. Electronic-1st	Incremental Charge - Manual Svc Order vs. Electronic-Add'l	Incremental Charge - Manual Svc Order vs. Electronic-Disc 1st	Incremental Charge - Manual Svc Order vs. Electronic-Disc Add'l
						Rec	Nonrecurring		Nonrecurring Disconnect		OSS Rates ($)					
							First	Add'l	First	Add'l	SOMEC	SOMAN	SOMAN	SOMAN	SOMAN	SOMAN
	UNBUNDLED PORT with REMOTE CALL FORWARDING CAPABILITY															
	UNBUNDLED REMOTE CALL FORWARDING SERVICE - RESIDENCE															
	Unbundled Remote Call Forwarding Service, Area Calling, Res			UEPVR	UERAC	1.52	2.31	2.21								
	Unbundled Remote Call Forwarding Service, Local Calling - Res			UEPVR	UERLC	1.52	2.31	2.21								
	Unbundled Remote Call Forwarding Service, InterLATA - Res			UEPVR	UERTE	1.52	2.31	2.21								
	Unbundled Remote Call Forwarding Service, IntraLATA - Res			UEPVR	UERTR	1.52	2.31	2.21								
	Non-Recurring															
	Unbundled Remote Call Forwarding Service - Conversion - Switch-as-is			UEPVR	USAC2		0.10	0.10								
	Unbundled Remote Call Forwarding Service - Conversion with allowed change (PIC and LPIC)			UEPVR	USACC		0.10	0.10								
	UNBUNDLED REMOTE CALL FORWARDING - Bus															
	Unbundled Remote Call Forwarding Service, Area Calling - Bus			UEPVB	UERAC	1.52	2.31	2.21								
	Unbundled Remote Call Forwarding Service, Local Calling - Bus			UEPVB	UERLC	1.52	2.31	2.21								
	Unbundled Remote Call Forwarding Service, InterLATA - Bus			UEPVB	UERTE	1.52	2.31	2.21								
	Unbundled Remote Call Forwarding Service, IntraLATA - Bus			UEPVB	UERTR	1.52	2.31	2.21								
	Unbundled Remote Call Forwarding Service Expanded and Exception Local Calling			UEPVB	UERVJ	1.52	2.31	2.21								
	Non-Recurring															
	Unbundled Remote Call Forwarding Service - Conversion - Switch-as-is			UEPVB	USAC2		0.10	0.10								
	Unbundled Remote Call Forwarding Service - Conversion with allowed change (PIC and LPIC)			UEPVB	USACC		0.10	0.10								
UNBUNDLED LOCAL SWITCHING, PORT USAGE																
	End Office Switching (Port Usage)															
	End Office Switching Function, Per MOU					0.001868										
	End Office Trunk Port - Shared, Per MOU					0.00018										
	Tandem Switching (Port Usage) (Local or Access Tandem)															
	Tandem Switching Function Per MOU					0.0001067										
	Tandem Trunk Port - Shared, Per MOU					0.000222										
	Tandem Switching Function Per MOU (Melded)					0.000035296										
	Tandem Trunk Port - Shared, Per MOU (Melded)					0.000073438										
	Melded Factor: 33.08% of the Tandem Rate															
	Common Transport															
	Common Transport - Per Mile, Per MOU					0.0000032										
	Common Transport - Facilities Termination Per MOU					0.0003748										
UNBUNDLED PORT/LOOP COMBINATIONS - COST BASED RATES																
	Cost Based Rates are applied where BellSouth is required by FCC and/or State Commission rule to provide Unbundled Local Switching or Switch Ports.															
	Features shall apply to the Unbundled Port/Loop Combination - Cost Based Rate section in the same manner as they are applied to the Stand-Alone Unbundled Port section of this Rate Exhibit.															
	End Office and Tandem Switching Usage and Common Transport Usage rates in the Port section of this rate exhibit shall apply to all combinations of loop/port network elements except for UNE Coin Port/Loop Combinations.															
	The first and additional Port nonrecurring charges apply to Not Currently Combined Combos. For Currently Combined Combos the nonrecurring charges shall be those identified in the Nonrecurring - Currently Combined sections.															
	2-WIRE VOICE GRADE LOOP WITH 2-WIRE LINE PORT (RES)															
	UNE Port/Loop Combination Rates															
	2-Wire VG Loop/Port Combo - Zone 1		1			13.13										
	2-Wire VG Loop/Port Combo - Zone 2		2			23.75										
	2-Wire VG Loop/Port Combo - Zone 3		3			49.62										
	UNE Loop Rates															
	2-Wire Voice Grade Loop (SL1) - Zone 1		1	UEPRX	UEPLX	11.77										
	2-Wire Voice Grade Loop (SL1) - Zone 2		2	UEPRX	UEPLX	22.39										
	2-Wire Voice Grade Loop (SL1) - Zone 3		3	UEPRX	UEPLX	48.26										
	2-Wire Voice Grade Line Port Rates (Res)															
	2-Wire voice unbundled port - residence			UEPRX	UEPRL	1.36	38.85	19.08								
	2-Wire voice unbundled port with Caller ID - res			UEPRX	UEPRC	1.36	38.85	19.08								
	2-Wire voice unbundled port outgoing only - res			UEPRX	UEPRO	1.36	38.85	19.08								
	2-Wire voice Grade unbundled Louisiana extended local dialing parity port with Caller ID - res			UEPRX	UEPAS	1.36	38.85	19.08								

UNBUNDLED NETWORK ELEMENTS - Louisiana														Attachment: 2		Exhibit: A	
CATEGORY		RATE ELEMENTS	Interim	Zone	BCS	USOC	RATES ($)					Svc Order Submitted Elec per LSR	Svc Order Submitted Manually per LSR	Incremental Charge - Manual Svc Order vs. Electronic-1st	Incremental Charge - Manual Svc Order vs. Electronic-Add'l	Incremental Charge - Manual Svc Order vs. Electronic-Disc 1st	Incremental Charge - Manual Svc Order vs. Electronic-Disc Add'l
							Rec	Nonrecurring		Nonrecurring Disconnect		OSS Rates ($)					
								First	Add'l	First	Add'l	SOMEC	SOMAN	SOMAN	SOMAN	SOMAN	SOMAN
		2-Wire voice unbundled Louisiana Area Plus with Caller ID - res (RUL)			UEPRX	UEPAG	1.36	38.85	19.08								
		2-Wire voice unbundles res, low usage line port with Caller ID (LUM)			UEPRX	UEPAP	1.36	38.85	19.08								
		2-Wire Voice Unbundled Louisiana Residence Dialing Plan without Caller ID			UEPRX	UEPWG	1.36	38.85	19.08								
		2-Wire voice unbundled Louisiana Area Plus Port without Caller ID Capability			UEPRX	UEPRQ	1.36	38.85	19.08								
		2-Wire voice unbundled Low Usage Line Port without Caller ID Capability			UEPRX	UEPRT	1.36	38.85	19.08								
	FEATURES																
		All Features Offered			UEPRX	UEPVF	0.00	0.00	0.00								
	LOCAL NUMBER PORTABILITY																
		Local Number Portability (1 per port)			UEPRX	LNPCX	0.35										
	NONRECURRING CHARGES (NRCs) - CURRENTLY COMBINED																
		2-Wire Voice Grade Loop / Line Port Combination - Conversion - Switch-as-is			UEPRX	USAC2		0.10	0.10								
		2-Wire Voice Grade Loop / Line Port Combination - Conversion - Switch with change			UEPRX	USACC		0.10	0.10								
	ADDITIONAL NRCs																
		2-Wire Voice Grade Loop/Line Port Combination - Subsequent Activity			UEPRX	USAS2	0.00	0.00	0.00								
		Unbundled Miscellaneous Rate Element, Tag Loop at End User Premise			UEPRX	URETL		8.33	0.83								
	OFF/ON PREMISES EXTENSION CHANNELS																
		2 Wire Analog Voice Grade Extension Loop – Non-Design		1	UEPRX	UEAEN	12.90	36.54	16.87								
		2 Wire Analog Voice Grade Extension Loop – Non-Design		2	UEPRX	UEAEN	23.33	36.54	16.87								
		2 Wire Analog Voice Grade Extension Loop – Non-Design		3	UEPRX	UEAEN	48.43	36.54	16.87								
		2 Wire Analog Voice Grade Extension Loop – Design		1	UEPRX	UEAED	14.93	102.10	65.72								
		2 Wire Analog Voice Grade Extension Loop – Design		2	UEPRX	UEAED	25.35	102.10	65.72								
		2 Wire Analog Voice Grade Extension Loop – Design		3	UEPRX	UEAED	50.46	102.10	65.72								
	INTEROFFICE TRANSPORT																
		Interoffice Transport - Dedicated - 2 Wire Voice Grade - Facility Termination			UEPRX	U1TV2	22.60	39.36	26.62								
		Interoffice Transport - Dedicated - 2 Wire Voice Grade - Per Mile or Fraction Mile			UEPRX	U1TVM	0.013	0.00	0.00								
	2-WIRE VOICE GRADE LOOP WITH 2-WIRE LINE PORT (BUS)																
	UNE Port/Loop Combination Rates																
		2-Wire VG Loop/Port Combo - Zone 1		1			13.13										
		2-Wire VG Loop/Port Combo - Zone 2		2			23.75										
		2-Wire VG Loop/Port Combo - Zone 3		3			49.62										
	UNE Loop Rates																
		2-Wire Voice Grade Loop (SL1) - Zone 1		1	UEPBX	UEPLX	11.77										
		2-Wire Voice Grade Loop (SL1) - Zone 2		2	UEPBX	UEPLX	22.39										
		2-Wire Voice Grade Loop (SL1) - Zone 3		3	UEPBX	UEPLX	48.26										
	2-Wire Voice Grade Line Port (Bus)																
		2-Wire voice unbundled port without Caller ID - bus			UEPBX	UEPBL	1.36	38.85	19.08								
		2-Wire voice unbundled port with Caller + E484 ID - bus			UEPBX	UEPBC	1.36	38.85	19.08								
		2-Wire voice unbundled port outgoing only - bus			UEPBX	UEPBO	1.36	38.85	19.08								
		2-Wire voice Grade unbundled Louisiana extended local dialing parity port with Caller ID - bus			UEPBX	UEPAX	1.36	38.85	19.08								
		2-Wire voice unbundled incoming only port with Caller ID - Bus			UEPBX	UEPB1	1.36	38.85	19.08								
		2-Wire voice unbundled Louisiana Bus Area Calling Port with Caller ID (BUC)			UEPBX	UEPAA	1.36	38.85	19.08								
		2-Wire Voice Unbundled Louisiana Business Dialing Plan without Caller ID			UEPBX	UEPWH	1.36	38.85	19.08								
		2-Wire voice unbundled Louisiana Business Area Calling Port without Caller ID Capability			UEPBX	UEPBA	1.36	38.85	19.08								

UNBUNDLED NETWORK ELEMENTS - Louisiana													Attachment: 2		Exhibit: A	
CATEGORY	RATE ELEMENTS	Interim	Zone	BCS	USOC	RATES ($)					Svc Order Submitted Elec per LSR	Svc Order Submitted Manually per LSR	Incremental Charge - Manual Svc Order vs. Electronic-1st	Incremental Charge - Manual Svc Order vs. Electronic-Add'l	Incremental Charge - Manual Svc Order vs. Electronic-Disc 1st	Incremental Charge - Manual Svc Order vs. Electronic-Disc Add'l
						Rec	Nonrecurring		Nonrecurring Disconnect		OSS Rates ($)					
							First	Add'l	First	Add'l	SOMEC	SOMAN	SOMAN	SOMAN	SOMAN	SOMAN
	2-Wire voice unbundled Incoming Only Port without Caller ID Capability			UEPBX	UEPBE	1.36	38.85	19.08								
LOCAL NUMBER PORTABILITY																
	Local Number Portability (1 per port)			UEPBX	LNPCX	0.35										
FEATURES																
	All Features Offered			UEPBX	UEPVF	0.00	0.00	0.00								
NONRECURRING CHARGES (NRCs) - CURRENTLY COMBINED																
	2-Wire Voice Grade Loop / Line Port Combination - Conversion - Switch-as-is			UEPBX	USAC2		0.10	0.10								
	2-Wire Voice Grade Loop / Line Port Combination - Conversion - Switch with change			UEPBX	USACC		0.10	0.10								
ADDITIONAL NRCs																
	2-Wire Voice Grade Loop/Line Port Combination - Subsequent Activity			UEPBX	USAS2		0.00	0.00								
	Unbundled Miscellaneous Rate Element, Tag Loop at End User Premise			UEPBX	URETL		8.33	0.83								
OFF/ON PREMISES EXTENSION CHANNELS																
	2 Wire Analog Voice Grade Extension Loop – Non-Design		1	UEPBX	UEAEN	12.90	36.54	16.87								
	2 Wire Analog Voice Grade Extension Loop – Non-Design		2	UEPBX	UEAEN	23.33	36.54	16.87								
	2 Wire Analog Voice Grade Extension Loop – Non-Design		3	UEPBX	UEAEN	48.43	36.54	16.87								
	2 Wire Analog Voice Grade Extension Loop – Design		1	UEPBX	UEAED	14.93	102.10	65.72								
	2 Wire Analog Voice Grade Extension Loop – Design		2	UEPBX	UEAED	25.35	102.10	65.72								
	2 Wire Analog Voice Grade Extension Loop – Design		3	UEPBX	UEAED	50.46	102.10	65.72								
INTEROFFICE TRANSPORT																
	Interoffice Transport - Dedicated - 2 Wire Voice Grade - Facility Termination			UEPBX	U1TV2	22.60	39.36	26.62								
	Interoffice Transport - Dedicated - 2 Wire Voice Grade - Per Mile or Fraction Mile			UEPBX	U1TVM	0.013	0.00	0.00								
2-WIRE VOICE GRADE LOOP WITH 2-WIRE LINE PORT (RES - PBX)																
UNE Port/Loop Combination Rates																
	2-Wire VG Loop/Port Combo - Zone 1		1			13.13										
	2-Wire VG Loop/Port Combo - Zone 2		2			23.75										
	2-Wire VG Loop/Port Combo - Zone 3		3			49.62										
UNE Loop Rates																
	2-Wire Voice Grade Loop (SL 1) - Zone 1		1	UEPRG	UEPLX	11.77										
	2-Wire Voice Grade Loop (SL 1) - Zone 2		2	UEPRG	UEPLX	22.39										
	2-Wire Voice Grade Loop (SL 1) - Zone 3		3	UEPRG	UEPLX	48.26										
2-Wire Voice Grade Line Port Rates (RES - PBX)																
	2-Wire VG Unbundled Combination 2-Way PBX Trunk Port - Res			UEPRG	UEPRD	1.36	66.91	31.29								
LOCAL NUMBER PORTABILITY																
	Local Number Portability (1 per port)			UEPRG	LNPCP	3.15	0.00	0.00								
FEATURES																
	All Features Offered			UEPRG	UEPVF	0.00	0.00	0.00								
NONRECURRING CHARGES (NRCs) - CURRENTLY COMBINED																
	2-Wire Voice Grade Loop/ Line Port Combination (PBX) - Conversion - Switch-As-Is			UEPRG	USAC2		7.68	1.85								
	2-Wire Voice Grade Loop/ Line Port Combination (PBX) - Conversion - Switch with Change			UEPRG	USACC		7.68	1.85								
ADDITIONAL NRCs																
	2-Wire Voice Grade Loop/ Line Port Combination (PBX) - Subsequent Activity			UEPRG	USAS2	0.00	0.00	0.00								
	PBX Subsequent Activity - Change/Rearrange Multiline Hunt Group						7.11	7.11								
	Unbundled Miscellaneous Rate Element, Tag Loop at End User Premise			UEPRG	URETL		8.33	0.83								
OFF/ON PREMISES EXTENSION CHANNELS																
	Local Channel Voice grade, per termination		1	UEPRG	P2JHX	14.93	102.10	65.72								
	Local Channel Voice grade, per termination		2	UEPRG	P2JHX	25.35	102.10	65.72								

UNBUNDLED NETWORK ELEMENTS - Louisiana														Attachment: 2		Exhibit: A	
CATEGORY		RATE ELEMENTS	Interim	Zone	BCS	USOC	RATES ($)					Svc Order Submitted Elec per LSR	Svc Order Submitted Manually per LSR	Incremental Charge - Manual Svc Order vs. Electronic-1st	Incremental Charge - Manual Svc Order vs. Electronic-Add'l	Incremental Charge - Manual Svc Order vs. Electronic-Disc 1st	Incremental Charge - Manual Svc Order vs. Electronic-Disc Add'l
							Rec	Nonrecurring		Nonrecurring Disconnect		OSS Rates ($)					
								First	Add'l	First	Add'l	SOMEC	SOMAN	SOMAN	SOMAN	SOMAN	SOMAN
		Local Channel Voice grade, per termination		3	UEPRG	P2JHX	50.46	102.10	65.72								
	INTEROFFICE TRANSPORT																
		Interoffice Transport - Dedicated - 2 Wire Voice Grade - Facility Termination			UEPRG	U1TV2	22.60	39.36	26.62								
		Interoffice Transport - Dedicated - 2 Wire Voice Grade - Per Mile or Fraction Mile			UEPRG	U1TVM	0.013	0.00	0.00								
	2-WIRE VOICE GRADE LOOP WITH 2-WIRE LINE PORT (BUS - PBX)																
	UNE Port/Loop Combination Rates																
		2-Wire VG Loop/Port Combo - Zone 1		1			13.13										
		2-Wire VG Loop/Port Combo - Zone 2		2			23.75										
		2-Wire VG Loop/Port Combo - Zone 3		3			49.62										
	UNE Loop Rates																
		2-Wire Voice Grade Loop (SL 1) - Zone 1		1	UEPPX	UEPLX	11.77										
		2-Wire Voice Grade Loop (SL 1) - Zone 2		2	UEPPX	UEPLX	22.39										
		2-Wire Voice Grade Loop (SL 1) - Zone 3		3	UEPPX	UEPLX	48.26										
	2-Wire Voice Grade Line Port Rates (BUS - PBX)																
		Line Side Unbundled Combination 2-Way PBX Trunk Port - Bus			UEPPX	UEPPC	1.36	66.91	31.29								
		Line Side Unbundled Outward PBX Trunk Port - Bus			UEPPX	UEPPO	1.36	66.91	31.29								
		Line Side Unbundled Incoming PBX Trunk Port - Bus			UEPPX	UEPP1	1.36	66.91	31.29								
		2-Wire Voice Unbundled 2-Way Combination PBX Louisiana Calling Port			UEPPX	UEPL2	1.36	66.91	31.29								
		2-Wire Voice Unbundled PBX LD Terminal Ports			UEPPX	UEPLD	1.36	66.91	31.29								
		2-Wire Voice Unbundled 2-Way Combination PBX Usage Port			UEPPX	UEPXA	1.36	66.91	31.29								
		2-Wire Voice Unbundled PBX Toll Terminal Hotel Ports			UEPPX	UEPXB	1.36	66.91	31.29								
		2-Wire Voice Unbundled PBX LD DDD Terminals Port			UEPPX	UEPXC	1.36	66.91	31.29								
		2-Wire Voice Unbundled PBX LD Terminal Switchboard Port			UEPPX	UEPXD	1.36	66.91	31.29								
		2-Wire Voice Unbundled PBX LD Terminal Switchboard IDD Capable Port			UEPPX	UEPXE	1.36	66.91	31.29								
		2-Wire Voice Unbundled 2-Way PBX Louisiana Local Optional Calling Port			UEPPX	UEPXK	1.36	66.91	31.29								
		2-Wire Voice Unbundled 2-Way PBX Hotel/Hospital Economy Administrative Calling Port			UEPPX	UEPXL	1.36	66.91	31.29								
		2-Wire Voice Unbundled 2-Way PBX Hotel/Hospital Economy Room Calling Port			UEPPX	UEPXM	1.36	66.91	31.29								
		2-Wire Voice Unbundled 1-Way Outgoing PBX Hotel/Hospital Discount Room Calling Port			UEPPX	UEPXO	1.36	66.91	31.29								
		2-Wire Voice Unbundled 1-Way Outgoing PBX Louisiana Local Discount Calling Port			UEPPX	UEPXP	1.36	66.91	31.29								
		2-Wire Voice Unbundled 1-Way Outgoing PBX Measured Port			UEPPX	UEPXS	1.36	66.91	31.29								
	LOCAL NUMBER PORTABILITY																
		Local Number Portability (1 per port)			UEPPX	LNPCP	3.15	0.00	0.00								
	FEATURES																
		All Features Offered			UEPPX	UEPVF	0.00	0.00	0.00								
	NONRECURRING CHARGES (NRCs) - CURRENTLY COMBINED																
		2-Wire Voice Grade Loop/ Line Port Combination (PBX) - Conversion - Switch-As-Is			UEPPX	USAC2		7.68	1.85								
		2-Wire Voice Grade Loop/ Line Port Combination (PBX) - Conversion - Switch with Change			UEPPX	USACC		7.68	1.85								
	ADDITIONAL NRCs																
		2-Wire Voice Grade Loop/ Line Port Combination (PBX) - Subsequent Activity			UEPPX	USAS2	0.00	0.00	0.00								
		PBX Subsequent Activity - Change/Rearrange Multiline Hunt Group						7.11	7.11								
		Unbundled Miscellaneous Rate Element, Tag Loop at End User Premise			UEPPX	URETL		8.33	0.83								
	OFF/ON PREMISES EXTENSION CHANNELS																
		Local Channel Voice grade, per termination		1	UEPPX	P2JHX	14.93	102.10	65.72								
		Local Channel Voice grade, per termination		2	UEPPX	P2JHX	25.35	102.10	65.72								

UNBUNDLED NETWORK ELEMENTS - Louisiana													Attachment: 2		Exhibit: A	
CATEGORY	RATE ELEMENTS	Interim	Zone	BCS	USOC	RATES ($)					Svc Order Submitted Elec per LSR	Svc Order Submitted Manually per LSR	Incremental Charge - Manual Svc Order vs. Electronic-1st	Incremental Charge - Manual Svc Order vs. Electronic-Add'l	Incremental Charge - Manual Svc Order vs. Electronic-Disc 1st	Incremental Charge - Manual Svc Order vs. Electronic-Disc Add'l
						Rec	Nonrecurring		Nonrecurring Disconnect		OSS Rates ($)					
							First	Add'l	First	Add'l	SOMEC	SOMAN	SOMAN	SOMAN	SOMAN	SOMAN
	Local Channel Voice grade, per termination		3	UEPPX	P2JHX	50.46	102.10	65.72								
INTEROFFICE TRANSPORT																
	Interoffice Transport - Dedicated - 2 Wire Voice Grade - Facility Termination			UEPPX	U1TV2	22.60	39.36	26.62								
	Interoffice Transport - Dedicated - 2 Wire Voice Grade - Per Mile or Fraction Mile			UEPPX	U1TVM	0.013	0.00	0.00								
2-WIRE VOICE GRADE LOOP WITH 2-WIRE ANALOG LINE COIN PORT																
UNE Port/Loop Combination Rates																
	2-Wire VG Coin Port/Loop Combo – Zone 1		1			13.13										
	2-Wire VG Coin Port/Loop Combo – Zone 2		2			23.75										
	2-Wire VG Coin Port/Loop Combo – Zone 3		3			49.62										
UNE Loop Rates																
	2-Wire Voice Grade Loop (SL1) - Zone 1		1	UEPCO	UEPLX	11.77										
	2-Wire Voice Grade Loop (SL1) - Zone 2		2	UEPCO	UEPLX	22.39										
	2-Wire Voice Grade Loop (SL1) - Zone 3		3	UEPCO	UEPLX	48.26										
2-Wire Voice Grade Line Ports (COIN)																
	2-Wire Coin 2-Way without Operator Screening and without Blocking (AL, KY, LA, MS)			UEPCO	UEPRF	1.36	38.85	19.08								
	2-Wire Coin 2-Way with Operator Screening and Blocking: 011, 900/976, 1+DDD (AL, KY, LA, MS)			UEPCO	UEPRA	1.36	38.85	19.08								
	2-Wire Coin 2-Way with Operator Screening and 011 Blocking (AL, LA, MS)			UEPCO	UEPRB	1.36	38.85	19.08								
	2-Wire Coin 2-Way with Operator Screening & Blocking: 900/976, 1+DDD, 011+, & Local (AL, KY, LA, MS)			UEPCO	UEPCD	1.36	38.85	19.08								
	2-Wire Coin Outward without Blocking and without Operator Screening (KY, LA, MS)			UEPCO	UEPRN	1.36	38.85	19.08								
	2-Wire Coin Outward with Operator Screening and 011 Blocking (LA)			UEPCO	UEPLA	1.36	38.85	19.08								
	2-Wire Coin Outward with Operator Screening and Blocking: 011, 900/976, 1+DDD (AL, KY, LA, MS)			UEPCO	UEPRH	1.36	38.85	19.08								
	2-Wire Coin Outward Operator Screening & Blocking: 900/976, 1+DDD, 011+, and Local (AL, KY, LA, MS)			UEPCO	UEPCN	1.36	38.85	19.08								
	2-Wire Coin 2-Way Smartline with 900/976 (Louisiana only)			UEPCO	UEPNA	1.36	38.85	19.08								
	2-Wire Coin Outward Smartline with 900/976 (Louisiana only)			UEPCO	UEPCB	1.36	38.85	19.08								
ADDITIONAL UNE COIN PORT/LOOP (RC)																
	UNE Coin Port/Loop Combo Usage (Flat Rate)			UEPCO	URECU	1.81	0.00	0.00	0.00	0.00						
LOCAL NUMBER PORTABILITY																
	Local Number Portability (1 per port)			UEPCO	LNPCX	0.35										
NONRECURRING CHARGES - CURRENTLY COMBINED																
	2-Wire Voice Grade Loop / Line Port Combination - Conversion - Switch-as-is			UEPCO	USAC2		0.10	0.10								
	2-Wire Voice Grade Loop / Line Port Combination - Conversion - Switch with change			UEPCO	USACC		0.10	0.10								
ADDITIONAL NRCs																
	2-Wire Voice Grade Loop/Line Port Combination - Subsequent Activity			UEPCO	USAS2		0.00	0.00								
	Unbundled Miscellaneous Rate Element, Tag Loop at End User Premise			UEPCO	URETL		8.33	0.83								
2-WIRE VOICE LOOP/ 2WIRE VOICE GRADE IO TRANSPORT/ 2-WIRE LINE PORT (RES)																
UNE Port/Loop Combination Rates																
	2-Wire VG Loop/IO Tranport/Port Combo - Zone 1		1			16.45										
	2-Wire VG Loop/IO Tranport/Port Combo - Zone 2		2			26.87										
	2-Wire VG Loop/IO Tranport/Port Combo - Zone 3		3			51.98										
UNE Loop Rates																
	2-Wire Voice Grade Loop (SL2) - Zone 1		1	UEPFR	UECF2	14.93										
	2-Wire Voice Grade Loop (SL2) - Zone 2		2	UEPFR	UECF2	25.35										
	2-Wire Voice Grade Loop (SL2) - Zone 3		3	UEPFR	UECF2	50.46										
2-Wire Voice Grade Line Port Rates (Res)																
	2-Wire voice unbundled port - residence			UEPFR	UEPRL	1.52	104.41	67.93								

UNBUNDLED NETWORK ELEMENTS - Louisiana													Attachment: 2		Exhibit: A	
CATEGORY	RATE ELEMENTS	Interim	Zone	BCS	USOC	RATES ($)					Svc Order Submitted Elec per LSR	Svc Order Submitted Manually per LSR	Incremental Charge - Manual Svc Order vs. Electronic-1st	Incremental Charge - Manual Svc Order vs. Electronic-Add'l	Incremental Charge - Manual Svc Order vs. Electronic-Disc 1st	Incremental Charge - Manual Svc Order vs. Electronic-Disc Add'l
						Rec	Nonrecurring		Nonrecurring Disconnect		OSS Rates ($)					
							First	Add'l	First	Add'l	SOMEC	SOMAN	SOMAN	SOMAN	SOMAN	SOMAN
	2-Wire voice unbundled port with Caller ID - res			UEPFR	UEPRC	1.52	104.41	67.93								
	2-Wire voice unbundled port outgoing only - res			UEPFR	UEPRO	1.52	104.41	67.93								
	2-Wire voice Grade unbundled Louisiana extended local dialing parity port with Caller ID - res			UEPFR	UEPAS	1.52	104.41	67.93								
	2-Wire voice unbundled Louisiana Area Plus with Caller ID - res (RUL)			UEPFR	UEPAG	1.52	104.41	67.93								
	2-Wire voice unbundles res, low usage line port with Caller ID (LUM)			UEPFR	UEPAP	1.52	104.41	67.93								
	2-Wire Voice Unbundled Louisiana Residence Dialing Plan without Caller ID			UEPFR	UEPWG	1.52	104.41	67.93								
INTEROFFICE TRANSPORT																
	Interoffice Transport - Dedicated - 2 Wire Voice Grade - Facility Termination			UEPFR	U1TV2	22.60	39.36	26.62								
	Interoffice Transport - Dedicated - 2 Wire Voice Grade - Per Mile or Fraction Mile			UEPFR	1L5XX	0.013										
FEATURES																
	All Features Offered			UEPFR	UEPVF	0.00	0.00	0.00								
LOCAL NUMBER PORTABILITY																
	Local Number Portability (1 per port)			UEPFR	LNPCX	0.35										
NONRECURRING CHARGES (NRCs) - CURRENTLY COMBINED																
	2-Wire Loop / Dedicated IO Transport / 2 Wire Line Port Combination - Conversion - Switch-as-is			UEPFR	USAC2		8.24	1.81								
	2-Wire Loop / Dedicated IO Transport / 2 Wire Line Port Combination - Conversion - Switch-With-Change			UEPFR	USACC		8.24	1.81								
	Unbundled Miscellaneous Rate Element, Tag Designed Loop at End User Premise			UEPFR	URETN		11.20	1.10								
2-WIRE VOICE LOOP/ 2WIRE VOICE GRADE IO TRANSPORT/ 2-WIRE LINE PORT (BUS)																
UNE Port/Loop Combination Rates																
	2-Wire VG Loop/IO Tranport/Port Combo - Zone 1		1			16.45										
	2-Wire VG Loop/IO Tranport/Port Combo - Zone 2		2			26.87										
	2-Wire VG Loop/IO Tranport/Port Combo - Zone 3		3			51.98										
UNE Loop Rates																
	2-Wire Voice Grade Loop (SL2) - Zone 1		1	UEPFB	UECF2	14.93										
	2-Wire Voice Grade Loop (SL2) - Zone 2		2	UEPFB	UECF2	25.35										
	2-Wire Voice Grade Loop (SL2) - Zone 3		3	UEPFB	UECF2	50.46										
2-Wire Voice Grade Line Port (Bus)																
	2-Wire voice unbundled port without Caller ID - bus			UEPFB	UEPBL	1.52	104.41	67.93								
	2-Wire voice unbundled port with Caller + E484 ID - bus			UEPFB	UEPBC	1.52	104.41	67.93								
	2-Wire voice unbundled port outgoing only - bus			UEPFB	UEPBO	1.52	104.41	67.93								
	2-Wire voice Grade unbundled Alabama extended local dialing parity port with Caller ID - bus			UEPFB	UEPAW											
	2-Wire voice Grade unbundled Louisiana extended local dialing parity port with Caller ID - bus			UEPFB	UEPAX	1.52	104.41	67.93								
	2-Wire voice unbundled incoming only port with Caller ID - Bus			UEPFB	UEPB1	1.52	104.41	67.93								
	2-Wire voice unbundled Louisiana Bus Area Calling Port with Caller ID (BUC)			UEPFB	UEPAA	1.52	104.41	67.93								
	2-Wire Voice Unbundled Louisiana Business Dialing Plan without Caller ID			UEPFB	UEPWH	1.52	104.41	67.93								
LOCAL NUMBER PORTABILITY																
	Local Number Portability (1 per port)			UEPFB	LNPCX	0.35										
INTEROFFICE TRANSPORT																
	Interoffice Transport - Dedicated - 2 Wire Voice Grade - Facility Termination			UEPFB	U1TV2	22.60	39.36	26.62								
	Interoffice Transport - Dedicated - 2 Wire Voice Grade - Per Mile or Fraction Mile			UEPFB	1L5XX	0.013										
FEATURES																
	All Features Offered			UEPFB	UEPVF	0.00	0.00	0.00								
NONRECURRING CHARGES (NRCs) - CURRENTLY COMBINED																

CATEGORY	RATE ELEMENTS	Interim	Zone	BCS	USOC	RATES ($)					Svc Order Submitted Elec per LSR	Svc Order Submitted Manually per LSR	Incremental Charge - Manual Svc Order vs. Electronic-1st	Incremental Charge - Manual Svc Order vs. Electronic-Add'l	Incremental Charge - Manual Svc Order vs. Electronic-Disc 1st	Incremental Charge - Manual Svc Order vs. Electronic-Disc Add'l
						Rec	Nonrecurring		Nonrecurring Disconnect		OSS Rates ($)					
							First	Add'l	First	Add'l	SOMEC	SOMAN	SOMAN	SOMAN	SOMAN	SOMAN
	2-Wire Loop / Dedicated IO Transport / 2 Wire Line Port Combination - Conversion - Switch-as-is			UEPFB	USAC2		8.24	1.81								
	2-Wire Loop / Dedicated IO Transport / 2 Wire Line Port Combination - Conversion - Switch with change			UEPFB	USACC		8.24	1.81								
	Unbundled Miscellaneous Rate Element, Tag Designed Loop at End User Premise			UEPFB	URETN		11.20	1.10								
2-WIRE VOICE LOOP/ 2WIRE VOICE GRADE IO TRANSPORT/ 2-WIRE LINE PORT (PBX)																
UNE Port/Loop Combination Rates																
	2-Wire VG Loop/IO Tranport/Port Combo - Zone 1		1			16.45										
	2-Wire VG Loop/IO Tranport/Port Combo - Zone 2		2			26.87										
	2-Wire VG Loop/IO Tranport/Port Combo - Zone 3		3			51.98										
UNE Loop Rates																
	2-Wire Voice Grade Loop (SL2) - Zone 1		1	UEPFP	UECF2	14.93										
	2-Wire Voice Grade Loop (SL2) - Zone 2		2	UEPFP	UECF2	25.35										
	2-Wire Voice Grade Loop (SL2) - Zone 3		3	UEPFP	UECF2	50.46										
2-Wire Voice Grade Line Port Rates (BUS - PBX)																
	Line Side Unbundled Combination 2-Way PBX Trunk Port - Bus			UEPFP	UEPPC	1.52	132.47	82.14								
	Line Side Unbundled Outward PBX Trunk Port - Bus			UEPFP	UEPPO	1.52	132.47	82.14								
	Line Side Unbundled Incoming PBX Trunk Port - Bus			UEPFP	UEPP1	1.52	132.47	82.14								
	2-Wire Voice Unbundled 2-Way Combination PBX Louisiana Calling Port			UEPFP	UEPL2	1.52	132.47	82.14								
	2-Wire Voice Unbundled PBX LD Terminal Ports			UEPFP	UEPLD	1.52	132.47	82.14								
	2-Wire Voice Unbundled 2-Way Combination PBX Usage Port			UEPFP	UEPXA	1.52	132.47	82.14								
	2-Wire Voice Unbundled PBX Toll Terminal Hotel Ports			UEPFP	UEPXB	1.52	132.47	82.14								
	2-Wire Voice Unbundled PBX LD DDD Terminals Port			UEPFP	UEPXC	1.52	132.47	82.14								
	2-Wire Voice Unbundled PBX LD Terminal Switchboard Port			UEPFP	UEPXD	1.52	132.47	82.14								
	2-Wire Voice Unbundled PBX LD Terminal Switchboard IDD Capable Port			UEPFP	UEPXE	1.52	132.47	82.14								
	2-Wire Voice Unbundled 2-Way PBX Louisiana Local Optional Calling Port			UEPFP	UEPXK	1.52	132.47	82.14								
	2-Wire Voice Unbundled 2-Way PBX Hotel/Hospital Economy Administrative Calling Port			UEPFP	UEPXL	1.52	132.47	82.14								
	2-Wire Voice Unbundled 2-Way PBX Hotel/Hospital Economy Room Calling Port			UEPFP	UEPXM	1.52	132.47	82.14								
	2-Wire Voice Unbundled 1-Way Outgoing PBX Hotel/Hospital Discount Room Calling Port			UEPFP	UEPXO	1.52	132.47	82.14								
	2-Wire Voice Unbundled 1-Way Outgoing PBX Louisiana Local Discount Calling Port			UEPFP	UEPXP	1.52	132.47	82.14								
	2-Wire Voice Unbundled 1-Way Outgoing PBX Measured Port			UEPFP	UEPXS	1.52	132.47	82.14								
LOCAL NUMBER PORTABILITY																
	Local Number Portability (1 per port)			UEPFP	LNPCP	3.15	0.00	0.00								
INTEROFFICE TRANSPORT																
	Interoffice Transport - Dedicated - 2 Wire Voice Grade - Facility Termination			UEPFP	U1TV2	22.60	39.36	26.62								
	Interoffice Transport - Dedicated - 2 Wire Voice Grade - Per Mile or Fraction Mile			UEPFP	1L5XX	0.013										
FEATURES																
	All Features Offered			UEPFP	UEPVF	0.00	0.00	0.00								
NONRECURRING CHARGES (NRCs) - CURRENTLY COMBINED																
	2-Wire Loop / Dedicated IO Transport / 2 Wire Line Port Combination - Conversion - Switch-as-is			UEPFP	USAC2		8.24	1.81								
	2-Wire Loop / Dedicated IO Transport / 2 Wire Line Port Combination - Conversion - Switch with change			UEPFP	USACC		8.24	1.81								
	Unbundled Miscellaneous Rate Element, Tag Designed Loop at End User Premise			UEPFP	URETN		11.20	1.10								
UNBUNDLED PORT/LOOP COMBINATIONS - COST BASED RATES																
2-WIRE VOICE GRADE LOOP- BUS ONLY - WITH 2-WIRE DID TRUNK PORT																
UNE Port/Loop Combination Rates																

UNBUNDLED NETWORK ELEMENTS - Louisiana														Attachment: 2		Exhibit: A	
CATEGORY		RATE ELEMENTS	Interim	Zone	BCS	USOC	RATES ($)					Svc Order Submitted Elec per LSR	Svc Order Submitted Manually per LSR	Incremental Charge - Manual Svc Order vs. Electronic-1st	Incremental Charge - Manual Svc Order vs. Electronic-Add'l	Incremental Charge - Manual Svc Order vs. Electronic-Disc 1st	Incremental Charge - Manual Svc Order vs. Electronic-Disc Add'l
							Rec	Nonrecurring		Nonrecurring Disconnect		OSS Rates ($)					
								First	Add'l	First	Add'l	SOMEC	SOMAN	SOMAN	SOMAN	SOMAN	SOMAN
		2-Wire VG Loop/2-Wire DID Trunk Port Combo - UNE Zone 1		1			23.20										
		2-Wire VG Loop/2-Wire DID Trunk Port Combo - UNE Zone 2		2			33.62										
		2-Wire VG Loop/2-Wire DID Trunk Port Combo - UNE Zone 3		3			58.73										
	UNE Loop Rates																
		2-Wire Analog Voice Grade Loop - (SL2) - UNE Zone 1		1	UEPPX	UECD1	14.93										
		2-Wire Analog Voice Grade Loop - (SL2) - UNE Zone 2		2	UEPPX	UECD1	25.35										
		2-Wire Analog Voice Grade Loop - (SL2) - UNE Zone 3		3	UEPPX	UECD1	50.46										
	UNE Port Rate																
		Exchange Ports - 2-Wire DID Port			UEPPX	UEPD1	8.27	217.95	83.92								
	NONRECURRING CHARGES - CURRENTLY COMBINED																
		2-Wire Voice Grade Loop / 2-Wire DID Trunk Port Combination - Switch-as-is			UEPPX	USAC1		7.10	1.81								
		2-Wire Voice Grade Loop / 2-Wire DID Trunk Port Conversion with BellSouth Allowable Changes			UEPPX	USA1C		7.10	1.81								
	ADDITIONAL NRCs																
		2-Wire DID Subsequent Activity - Add Trunks, Per Trunk			UEPPX	USAS1		26.01	26.01								
		Unbundled Miscellaneous Rate Element, Tag Designed Loop at End User Premise			UEPPX	URETN		11.20	1.10								
	Telephone Number/Trunk Group Establisment Charges																
		DID Trunk Termination (One Per Port)			UEPPX	NDT	0.00	0.00	0.00								
		Additional DID Numbers for each Group of 20 DID Numbers			UEPPX	ND4	0.00	0.00	0.00								
		DID Numbers, Non- consecutive DID Numbers , Per Number			UEPPX	ND5	0.00	0.00	0.00								
		Reserve Non-Consecutive DID numbers			UEPPX	ND6	0.00	0.00	0.00								
		Reserve DID Numbers			UEPPX	NDV	0.00	0.00	0.00								
	LOCAL NUMBER PORTABILITY																
		Local Number Portability (1 per port)			UEPPX	LNPCP	3.15	0.00	0.00								
	2-WIRE ISDN DIGITAL GRADE LOOP WITH 2-WIRE ISDN DIGITAL LINE SIDE PORT																
	UNE Port/Loop Combination Rates																
		2W ISDN Digital Grade Loop/2W ISDN Digital Line Side Port - UNE Zone 1		1	UEPPB UEPPR		27.48										
		2W ISDN Digital Grade Loop/2W ISDN Digital Line Side Port - UNE Zone 2		2	UEPPB UEPPR		40.34										
		2W ISDN Digital Grade Loop/2W ISDN Digital Line Side Port - UNE Zone 3		3	UEPPB UEPPR		70.99										
	UNE Loop Rates																
		2-Wire ISDN Digital Grade Loop - UNE Zone 1		1	UEPPB UEPPR	USL2X	19.09										
		2-Wire ISDN Digital Grade Loop - UNE Zone 2		2	UEPPB UEPPR	USL2X	31.95										
		2-Wire ISDN Digital Grade Loop - UNE Zone 3		3	UEPPB UEPPR	USL2X	62.60										
	UNE Port Rate																
		Exchange Port - 2-Wire ISDN Line Side Port			UEPPB UEPPR	UEPPB	8.39	184.10	128.42								
	NONRECURRING CHARGES - CURRENTLY COMBINED																
		2-Wire ISDN Digital Grade Loop / 2-Wire ISDN Line Side Port Combination - Conversion			UEPPB UEPPR	USACB	0.00	37.40	26.23								
	ADDITIONAL NRCs																
		Unbundled Miscellaneous Rate Element, Tag Designed Loop at End User Premise			UEPPB UEPPR	URETN		11.20	1.10								
		Unbundled Miscellaneous Rate Element, Tag Loop at End User Premise			UEPPB UEPPR	URETL		8.33	0.83								
	LOCAL NUMBER PORTABILITY																
		Local Number Portability (1 per port)			UEPPB UEPPR	LNPCX	0.35	0.00	0.00								
	B-CHANNEL USER PROFILE ACCESS:																
		CVS/CSD (DMS/5ESS)			UEPPB UEPPR	U1UCA	0.00	0.00	0.00								
		CVS (EWSD)			UEPPB UEPPR	U1UCB	0.00	0.00	0.00								
		CSD			UEPPB UEPPR	U1UCC	0.00	0.00	0.00								
	B-CHANNEL AREA PLUS USER PROFILE ACCESS: (AL,KY,LA,MS SC,MS, & TN)																
		CVS/CSD (DMS/5ESS)			UEPPB UEPPR	U1UCD	0.00	0.00	0.00								
		CVS (EWSD)			UEPPB UEPPR	U1UCE	0.00	0.00	0.00								
		CSD			UEPPB UEPPR	U1UCF	0.00	0.00	0.00								

UNBUNDLED NETWORK ELEMENTS - Louisiana													Attachment: 2		Exhibit: A	
CATEGORY	RATE ELEMENTS	Interim	Zone	BCS	USOC	RATES ($)					Svc Order Submitted Elec per LSR	Svc Order Submitted Manually per LSR	Incremental Charge - Manual Svc Order vs. Electronic-1st	Incremental Charge - Manual Svc Order vs. Electronic-Add'l	Incremental Charge - Manual Svc Order vs. Electronic-Disc 1st	Incremental Charge - Manual Svc Order vs. Electronic-Disc Add'l
						Rec	Nonrecurring		Nonrecurring Disconnect		OSS Rates ($)					
							First	Add'l	First	Add'l	SOMEC	SOMAN	SOMAN	SOMAN	SOMAN	SOMAN
USER TERMINAL PROFILE																
	User Terminal Profile (EWSD only)			UEPPB UEPPR	U1UMA	0.00	0.00	0.00								
VERTICAL FEATURES																
	All Vertical Features - One per Channel B User Profile			UEPPB UEPPR	UEPVF	0.00	0.00	0.00								
INTEROFFICE CHANNEL MILEAGE																
	Interoffice Channel mileage each, including first mile and facilities termination			UEPPB UEPPR	M1GNC	22.613	39.36	26.62								
	Interoffice Channel mileage each, additional mile			UEPPB UEPPR	M1GNM	0.013	0.00	0.00								
4-WIRE DS1 DIGITAL LOOP WITH 4-WIRE ISDN DS1 DIGITAL TRUNK PORT																
The UNE-P DS1 combination rates below for in this rate exhibit apply to the embedded base in place as of 10/2/03 until 4/1/04. After 4/1/04 these rates shall revert to tariff rates or a separate commercial agreement.																
Requests for 4-Wire DS1 Digital Loop with 4-Wire ISDN DS1 Digital Trunk Port after the effective date of this amendment shall be provided pursuant to a separate agreement or tariff at BellSouth's discretion.																
UNE Port/Loop Combination Rates																
	4W DS1 Digital Loop/4W ISDN DS1 Digital Trunk Port - UNE Zone 1		1	UEPPP		180.52										
	4W DS1 Digital Loop/4W ISDN DS1 Digital Trunk Port - UNE Zone 2		2	UEPPP		289.78										
	4W DS1 Digital Loop/4W ISDN DS1 Digital Trunk Port - UNE Zone 3		3	UEPPP		586.76										
UNE Loop Rates																
	4-Wire DS1 Digital Loop - UNE Zone 1		1	UEPPP	USL4P	85.70										
	4-Wire DS1 Digital Loop - UNE Zone 2		2	UEPPP	USL4P	194.96										
	4-Wire DS1 Digital Loop - UNE Zone 3		3	UEPPP	USL4P	491.94										
UNE Port Rate																
	Exchange Ports - 4-Wire ISDN DS1 Port (E:4/1/2004)			UEPPP	UEPPP	94.82	443.08	251.60								
NONRECURRING CHARGES - CURRENTLY COMBINED																
	4-Wire DS1 Digital Loop / 4-Wire ISDN DS1 Digital Trunk Port Combination - Conversion -Switch-as-is (E:4/1/2004)			UEPPP	USACP	0.00	115.63	76.29								
ADDITIONAL NRCs																
	4-Wire DS1 Loop/4-W ISDN Digtl Trk Port - Subsqt Actvy-Inward/two way Tel Nos. (except NC)			UEPPP	PR7TF		0.48									
	4-Wire DS1 Loop / 4-Wire ISDN DS1 Digital Trunk Port - Outward Tel Numbers (All States except NC)			UEPPP	PR7TO		11.18	11.18								
	4-Wire DS1 Loop / 4-Wire ISDN DS1 Digital Trk Port - Subsequent Inward Tel Numbers			UEPPP	PR7ZT		22.35	22.35								
LOCAL NUMBER PORTABILITY																
	Local Number Portability (1 per port)			UEPPP	LNPCN	1.75										
INTERFACE (Provsioning Only)																
	Voice/Data			UEPPP	PR71V	0.00	0.00	0.00								
	Digital Data			UEPPP	PR71D	0.00	0.00	0.00								
	Inward Data			UEPPP	PR71E	0.00	0.00	0.00								
New or Additional "B" Channel																
	New or Additional - Voice/Data B Channel			UEPPP	PR7BV	0.00	14.11									
	New or Additional - Digital Data B Channel			UEPPP	PR7BF	0.00	14.11									
	New or Additional Inward Data B Channel			UEPPP	PR7BD	0.00	14.11									
CALL TYPES																
	Inward			UEPPP	PR7C1	0.00	0.00	0.00								
	Outward			UEPPP	PR7CO	0.00	0.00	0.00								
	Two-way			UEPPP	PR7CC	0.00	0.00	0.00								
Interoffice Channel Mileage																
	Fixed Each Including First Mile			UEPPP	1LN1A	70.7352	86.69	79.44								
	Each Airline-Fractional Additional Mile			UEPPP	1LN1B	0.2652										
4-WIRE DS1 DIGITAL LOOP WITH 4-WIRE DDITS TRUNK PORT																
The UNE-P DS1 combination rates below for in this rate exhibit apply to the embedded base in place as of 10/2/03 until 4/1/04. After 4/1/04 these rates shall revert to tariff rates or a separate commercial agreement.																
Requests for 4-Wire DS1 Digital Loop with 4-Wire DDITS after the effective date of this amendment shall be provided pursuant to a separate agreement or tariff at BellSouth's discretion.																
UNE Port/Loop Combination Rates																
	4W DS1 Digital Loop/4W DDITS Trunk Port - UNE Zone 1		1	UEPDC		154.17										
	4W DS1 Digital Loop/4W DDITS Trunk Port - UNE Zone 2		2	UEPDC		263.43										
	4W DS1 Digital Loop/4W DDITS Trunk Port - UNE Zone 3		3	UEPDC		560.41										
UNE Loop Rates																

UNBUNDLED NETWORK ELEMENTS - Louisiana													Attachment: 2		Exhibit: A	
CATEGORY	RATE ELEMENTS	Interim	Zone	BCS	USOC	RATES ($)					Svc Order Submitted Elec per LSR	Svc Order Submitted Manually per LSR	Incremental Charge - Manual Svc Order vs. Electronic-1st	Incremental Charge - Manual Svc Order vs. Electronic-Add'l	Incremental Charge - Manual Svc Order vs. Electronic-Disc 1st	Incremental Charge - Manual Svc Order vs. Electronic-Disc Add'l
						Rec	Nonrecurring		Nonrecurring Disconnect		OSS Rates ($)					
							First	Add'l	First	Add'l	SOMEC	SOMAN	SOMAN	SOMAN	SOMAN	SOMAN
	4-Wire DS1 Digital Loop - UNE Zone 1		1	UEPDC	USLDC	85.70										
	4-Wire DS1 Digital Loop - UNE Zone 2		2	UEPDC	USLDC	194.96										
	4-Wire DS1 Digital Loop - UNE Zone 3		3	UEPDC	USLDC	491.94										
UNE Port Rate																
	4-Wire DDITS Digital Trunk Port (E:4/1/2004)			UEPDC	UDD1T	68.47	441.34	245.90								
NONRECURRING CHARGES - CURRENTLY COMBINED																
	4-Wire DS1 Digital Loop / 4-Wire DDITS Trunk Port Combination - Switch-as-is (E:4/1/2004)			UEPDC	USAC4		125.75	65.08								
	4-Wire DS1 Digital Loop / 4-Wire DDITS Trunk Port Combination - Conversion with DS1 Changes (E:4/1/2004)			UEPDC	USAWA		125.75	65.08								
	4-Wire DS1 Digital Loop / 4-Wire DDITS Trunk Port Combination - Conversion with Change - Trunk (E:4/1/2004)			UEPDC	USAWB		125.75	65.08								
ADDITIONAL NRCs																
	4-Wire DS1 Loop / 4-Wire DDITS Trunk Port - NRC - Subsequent Channel Activation/Chan - 2-Way Trunk			UEPDC	UDTTA		14.06	14.06								
	4-Wire DS1 Loop / 4-Wire DDITS Trunk Port - Subsequent Channel Activation/Chan - 1-Way Outward Trunk			UEPDC	UDTTB		14.06	14.06								
	4-Wire DS1 Loop / 4-Wire DDITS Trunk Port - Subsqnt Channel Activation/Chan Inward Trunk w/out DID			UEPDC	UDTTC		14.06	14.06								
	4-Wire DS1 Loop / 4-Wire DDITS Trunk Port - Subsqnt Chan Activation Per Chan - Inward Trunk with DID			UEPDC	UDTTD		14.06	14.06								
	4-Wire DS1 Loop / 4-Wire DDITS Trunk Port - Subsqnt Chan Activation / Chan - 2-Way DID w User Trans			UEPDC	UDTTE		14.06	14.06								
BIPOLAR 8 ZERO SUBSTITUTION																
	B8ZS -Superframe Format			UEPDC	CCOSF		0.00i	605.00s								
	B8ZS - Extended Superframe Format			UEPDC	CCOEF		0.00i	605.00s								
Alternate Mark Inversion																
	AMI -Superframe Format			UEPDC	MCOSF		0.00	0.00								
	AMI - Extended SuperFrame Format			UEPDC	MCOPO		0.00	0.00								
Telephone Number/Trunk Group Establisment Charges																
	Telephone Number for 2-Way Trunk Group			UEPDC	UDTGX	0.00										
	Telephone Number for 1-Way Outward Trunk Group			UEPDC	UDTGY	0.00										
	Telephone Number for 1-Way Inward Trunk Group Without DID			UEPDC	UDTGZ	0.00										
	DID Numbers for each Group of 20 DID Numbers			UEPDC	ND4	0.00										
	DID Numbers, Non- consecutive DID Numbers , Per Number			UEPDC	ND5	0.00										
	Reserve Non-Consecutive DID Nos.			UEPDC	ND6	0.00	0.00	0.00								
	Reserve DID Numbers			UEPDC	NDV	0.00	0.00	0.00								
Dedicated DS1 (Interoffice Channel Mileage) - FX/FCO for 4-Wire DS1 Digital Loop with 4-Wire DDITS Trunk Port																
	Interoffice Channel Mileage - Fixed rate 0-8 miles (Facilities Termination)			UEPDC	1LNO1	70.47	86.69	79.44								
	Interoffice Channel Mileage - Additional rate per mile - 0-8 miles			UEPDC	1LNOA	0.2652	0.00	0.00								
	Interoffice Channel Mileage - Fixed rate 9-25 miles (Facilities Termination)			UEPDC	1LNO2	0.00	0.00	0.00								
	Interoffice Channel Mileage - Additional rate per mile - 9-25 miles			UEPDC	1LNOB	0.2652	0.00	0.00								
	Interoffice Channel Mileage - Fixed rate 25+ miles (Facilities Termination)			UEPDC	1LNO3	0.00	0.00	0.00	0.00							
	Interoffice Channel Mileage - Additional rate per mile - 25+ miles			UEPDC	1LNOC	0.2652	0.00	0.00								
	Local Number Portability, per DS0 Activated			UEPDC	LNPCP	3.15	0.00	0.00	0.00							
	Central Office Termininating Point			UEPDC	CTG	0.00										
4-WIRE DS1 LOOP WITH CHANNELIZATION WITH PORT																
System is 1 DS1 Loop, 1 D4 Channel Bank, and up to 24 Feature Activations																
Each System can have up to 24 combinations of rates depending on type and number of ports used																
The UNE-P DS1 combination rates below for 4-Wire DS1 Loop with Channelization with Port in this rate exhibit apply to the embedded base in place as of 10/2/03 until 4/1/04. After 4/1/04 these rates shall revert to tariff rates or a separate agreement.																
Requests for 4-Wire DS1 Loop with Channelization with Port after the effective date of this amendment shall be provided pursuant to a separate agreement or tariff at BellSouth's discretion.																
UNE DS1 Loop																
	4-Wire DS1 Loop - UNE Zone 1		1	UEPMG	USLDC	85.70	0.00	0.00								

CATEGORY	RATE ELEMENTS	Interim	Zone	BCS	USOC	RATES ($)					Svc Order Submitted Elec per LSR	Svc Order Submitted Manually per LSR	Attachment: 2 Incremental Charge - Manual Svc Order vs. Electronic-1st	Attachment: 2 Incremental Charge - Manual Svc Order vs. Electronic-Add'l	Exhibit: A Incremental Charge - Manual Svc Order vs. Electronic-Disc 1st	Exhibit: A Incremental Charge - Manual Svc Order vs. Electronic-Disc Add'l
						Rec	Nonrecurring		Nonrecurring Disconnect		OSS Rates ($)					
							First	Add'l	First	Add'l	SOMEC	SOMAN	SOMAN	SOMAN	SOMAN	SOMAN
	4-Wire DS1 Loop - UNE Zone 2		2	UEPMG	USLDC	194.96	0.00	0.00								
	4-Wire DS1 Loop - UNE Zone 3		3	UEPMG	USLDC	491.94	0.00	0.00								
UNE DSO Channelization Capacities (D4 Channel Bank Configurations)																
	24 DSO Channel Capacity - 1 per DS1			UEPMG	VUM24	97.35	0.00	0.00								
	48 DSO Channel Capacity - 1 per 2 DS1s			UEPMG	VUM48	194.70	0.00	0.00								
	96 DSO Channel Capacity -1per 4 DS1s			UEPMG	VUM96	389.40	0.00	0.00								
	144 DS0 Channel Capacity - 1 per 6 DS1s			UEPMG	VUM14	584.10	0.00	0.00								
	192 DS0 Channel Capacity -1 per 8 DS1s			UEPMG	VUM19	778.80	0.00	0.00								
	240 DS0 Channel Capacity - 1 per 10 DS1s			UEPMG	VUM2O	973.50	0.00	0.00								
	288 DS0 Channel Capacity - 1 per 12 DS1s			UEPMG	VUM28	1,168.20	0.00	0.00								
	384 DS0 Channel Capacity - 1 per 16 DS1s			UEPMG	VUM38	1,557.60	0.00	0.00								
	480 DS0 Channel Capacity - 1 per 20 DS1s			UEPMG	VUM4O	1,947.00	0.00	0.00								
	576 DS0 Channel Capacity -1 per 24 DS1s			UEPMG	VUM57	2,336.40	0.00	0.00								
	672 DS0 Channel Capacity - 1 per 28 DS1s			UEPMG	VUM67	2,725.80	0.00	0.00								
Non-Recurring Charges (NRC) Associated with 4-Wire DS1 Loop with Channeliztion with Port - Conversion Charge Based on a System																
A Minimum System configuration is One (1) DS1, One (1) D4 Channel Bank, and Up To 24 DSO Ports with Feature Activations.																
Multiples of this configuration functioning as one are considered Add'l after the minimum system configuration is counted.																
	NRC - Conversion (Currently Combined) with or without BellSouth Allowed Changes			UEPMG	USAC4	0.00	146.13	8.12								
System Additions at End User Locations Where 4-Wire DS1 Loop with Channelization with Port Combination Currently Exists and																
New (Not Currently Combined) in all states, except in Density Zone 1 of Top 8 MSA's																
	1 DS1/D4 Channel Bank - Additionally Add NRC for each Port and Assoc Fea Activation (E:4/1/2004)			UEPMG	VUMD4	0.00	715.54	467.54								
Bipolar 8 Zero Substitution																
	Clear Channel Capability Format, superframe - Subsequent Activity Only			UEPMG	CCOSF	0.00	0.00i	605.00s								
	Clear Channel Capability Format - Extended Superframe - Subsequent Activity Only			UEPMG	CCOEF	0.00	0.00i	605.00s								
Alternate Mark Inversion (AMI)																
	Superframe Format			UEPMG	MCOSF	0.00	0.00	0.00								
	Extended Superframe Format			UEPMG	MCOPO	0.00	0.00	0.00								
Exchange Ports Associated with 4-Wire DS1 Loop with Channelization with Port																
Exchange Ports																
	Line Side Combination Channelized PBX Trunk Port - Business (E:4/1/2004)			UEPPX	UEPCX	1.52	0.00	0.00	0.00	0.00						
	Line Side Outward Channelized PBX Trunk Port - Business (E:4/1/2004)			UEPPX	UEPOX	1.52	0.00	0.00	0.00	0.00						
	Line Side Inward Only Channelized PBX Trunk Port without DID (E:4/1/2004)			UEPPX	UEP1X	1.52	0.00	0.00	0.00	0.00						
	2-Wire Trunk Side Unbundled Channelized DID Trunk Port (E:4/1/2004)			UEPPX	UEPDM	8.29	0.00	0.00	0.00	0.00						
	Unbundled Exchange Ports, 2-Wire Channelized – Outdial – (AL, KY, LA, MS, & TN)(Conversion from Network Access Service) (E:4/1/2004)			UEPPX	UEPCY	1.52	0.00	0.00	0.00	0.00						
	Unbundled Exchange Ports, 2-Wire Channelized – Combination (AL, KY, LA, MS, & TN) (Conversion from Network Access Service) (E:4/1/2004)			UEPPX	UEPCT	1.52	0.00	0.00	0.00	0.00						
	Unbundled Exchange Ports, 2-Wire Channelized – Outdial – Louisiana Only – Calling Plan (E:4/1/2004)			UEPPX	UEPC2	1.52	0.00	0.00	0.00	0.00						
	Unbundled Exchange Ports, 2-Wire Channelized – Two Way - Louisiana Only – Calling Plan (E:4/1/2004)			UEPPX	UEPC3	1.52	0.00	0.00	0.00	0.00						
Feature Activations - Unbundled Loop Concentration																
	Feature (Service) Activation for each Line Port Terminated in D4 Bank			UEPPX	1PQWM	0.6497	25.36	13.40								
	Feature (Service) Activation for each Trunk Port Terminated in D4 Bank			UEPPX	1PQWU	0.6497	78.05	18.40								
Telephone Number/ Group Establishment Charges for DID Service																
	DID Trunk Termination (1 per Port)			UEPPX	NDT	0.00	0.00	0.00								
	DID Numbers - groups of 20 - Valid all States			UEPPX	ND4	0.00	0.00	0.00								

CATEGORY	RATE ELEMENTS	Interim	Zone	BCS	USOC	RATES ($) Rec	Nonrecurring First	Nonrecurring Add'l	Nonrecurring Disconnect First	Nonrecurring Disconnect Add'l	Svc Order Submitted Elec per LSR	Svc Order Submitted Manually per LSR	OSS Rates ($) Incremental Charge - Manual Svc Order vs. Electronic-1st	OSS Rates ($) Incremental Charge - Manual Svc Order vs. Electronic-Add'l	OSS Rates ($) Incremental Charge - Manual Svc Order vs. Electronic-Disc 1st	OSS Rates ($) Incremental Charge - Manual Svc Order vs. Electronic-Disc Add'l
											SOMEC	SOMAN	SOMAN	SOMAN	SOMAN	SOMAN
	Non-Consecutive DID Numbers - per number			UEPPX	ND5	0.00	0.00	0.00								
	Reserve Non-Consecutive DID Numbers			UEPPX	ND6	0.00	0.00	0.00								
	Reserve DID Numbers			UEPPX	NDV	0.00	0.00	0.00								
Local Number Portability																
	Local Number Portability - 1 per port			UEPPX	LNPCP	3.15	0.00	0.00								
FEATURES - Vertical and Optional																
Local Switching Features Offered with Line Side Ports Only																
	All Features Available			UEPPX	UEPVF	0.00	0.00	0.00								
UNBUNDLED CENTREX PORT/LOOP COMBINATIONS - COST BASED RATES																
1. Cost Based Rates are applied where BellSouth is required by FCC and/or State Commission rule to provide Unbundled Local Switching or Switch Ports.																
2. Features shall apply to the Unbundled Port/Loop Combination - Cost Based Rate section in the same manner as they are applied to the Stand-Alone Unbundled Port section of this Rate Exhibit.																
3. End Office and Tandem Switching Usage and Common Transport Usage rates in the Port section of this rate exhibit shall apply to all combinations of loop/port network elements except for UNE Coin Port/Loop Combinations.																
4. The first and additional Port nonrecurring charges apply to Not Currently Combined Combos. For Currently Combined Combos, the nonrecurring charges shall be those identified in the Nonrecurring - Currently Combined sections. Additional NRCs may apply also and are categorized accordingly.																
5. Market Rates for Unbundled Centrex Port/Loop Combination will be negotiated on an Individual Case Basis, until further notice.																
UNE-P CENTREX - 1AESS - (Valid in AL,FL,GA,KY,LA,MS,&TN only)																
2-Wire VG Loop/2-Wire Voice Grade Port (Centrex) Combo																
UNE Port/Loop Combination Rates (Non-Design)																
	2-Wire VG Loop/2-Wire Voice Grade Port (Centrex) Port Combo - Non-Design		1	UEP91		13.13										
	2-Wire VG Loop/2-Wire Voice Grade Port (Centrex)Port Combo - Non-Design		2	UEP91		23.75										
	2-Wire VG Loop/2-Wire Voice Grade Port (Centrex)Port Combo - Non-Design		3	UEP91		49.62										
UNE Port/Loop Combination Rates (Design)																
	2-Wire VG Loop/2-Wire Voice Grade Port (Centrex) Port Combo - Design		1	UEP91		16.29										
	2-Wire VG Loop/2-Wire Voice Grade Port (Centrex)Port Combo - Design		2	UEP91		26.71										
	2-Wire VG Loop/2-Wire Voice Grade Port (Centrex)Port Combo - Design		3	UEP91		48.26										
UNE Loop Rate																
	2-Wire Voice Grade Loop (SL 1) - Zone 1		1	UEP91	UECS1	11.77										
	2-Wire Voice Grade Loop (SL 1) - Zone 2		2	UEP91	UECS1	22.39										
	2-Wire Voice Grade Loop (SL 1) - Zone 3		3	UEP91	UECS1	48.26										
	2-Wire Voice Grade Loop (SL 2) - Zone 1		1	UEP91	UECS2	14.93										
	2-Wire Voice Grade Loop (SL 2) - Zone 2		2	UEP91	UECS2	25.35										
	2-Wire Voice Grade Loop (SL 2) - Zone 3		3	UEP91	UECS2	50.46										
UNE Ports																
All States (Except North Carolina and Sout Carolina)																
	2-Wire Voice Grade Port (Centrex) Basic Local Area			UEP91	UEPYA	1.36	38.85	19.08								
	2-Wire Voice Grade Port (Centrex 800 termination)Basic Local Area			UEP91	UEPYB	1.36	38.85	19.08								
	2-Wire Voice Grade Port (Centrex with Caller ID)Note1 Basic Local Area			UEP91	UEPYH	1.36	38.85	19.08								
	2-Wire Voice Grade Port (Centrex from diff Serving Wire Center) Note 2, 3 Basic Local Area			UEP91	UEPYM	1.36	104.41	67.93								
	2-Wire Voice Grade Port, Diff Serving Wire Center - 800 Service Term - Basic Local Area			UEP91	UEPYZ	1.36	104.41	67.93								
	2-Wire Voice Grade Port terminated in on Megalink or equivalent - Basic Local Area			UEP91	UEPY9	1.36	38.85	19.08								
	2-Wire Voice Grade Port Terminated on 800 Service Term - Basic Local Area			UEP91	UEPY2	1.36	38.85	19.08								
AL, KY, LA, MS, & TN Only																
	2-Wire Voice Grade Port (Centrex)			UEP91	UEPQA	1.36	38.85	19.08								
	2-Wire Voice Grade Port (Centrex 800 termination)			UEP91	UEPQB	1.36	38.85	19.08								
	2-Wire Voice Grade Port (Centrex with Caller ID)1			UEP91	UEPQH	1.36	38.85	19.08								
	2-Wire Voice Grade Port (Centrex from diff Serving Wire Center)2,3			UEP91	UEPQM	1.36	104.41	67.93								

UNBUNDLED NETWORK ELEMENTS - Louisiana														Attachment: 2		Exhibit: A	
CATEGORY		RATE ELEMENTS	Interim	Zone	BCS	USOC	RATES ($)					Svc Order Submitted Elec per LSR	Svc Order Submitted Manually per LSR	Incremental Charge - Manual Svc Order vs. Electronic-1st	Incremental Charge - Manual Svc Order vs. Electronic-Add'l	Incremental Charge - Manual Svc Order vs. Electronic-Disc 1st	Incremental Charge - Manual Svc Order vs. Electronic-Disc Add'l
							Rec	Nonrecurring		Nonrecurring Disconnect		OSS Rates ($)					
								First	Add'l	First	Add'l	SOMEC	SOMAN	SOMAN	SOMAN	SOMAN	SOMAN
		2-Wire Voice Grade Port, Diff Serving Wire Center - 2,3 - 800 Service Term			UEP91	UEPQZ	1.36	104.41	67.93								
		2-Wire Voice Grade Port terminated in on Megalink or equivalent			UEP91	UEPQ9	1.36	38.85	19.08								
		2-Wire Voice Grade Port Terminated on 800 Service Term			UEP91	UEPQ2	1.36	38.85	19.08								
	Local Switching																
		Centrex Intercom Funtionality, per port			UEP91	URECS	0.8577										
	Local Number Portability																
		Local Number Portability (1 per port)			UEP91	LNPCC	0.35										
	Features																
		All Standard Features Offered, per port			UEP91	UEPVF	0.00										
		All Select Features Offered, per port			UEP91	UEPVS	0.00	412.25									
		All Centrex Control Features Offered, per port			UEP91	UEPVC	0.00										
	NARS																
		Unbundled Network Access Register - Combination			UEP91	UARCX	0.00	0.00	0.00	0.00	0.00						
		Unbundled Network Access Register - Indial			UEP91	UAR1X	0.00	0.00	0.00	0.00	0.00						
		Unbundled Network Access Register - Outdial			UEP91	UAROX	0.00	0.00	0.00	0.00	0.00						
	Miscellaneous Terminations																
	2-Wire Trunk Side																
		Trunk Side Terminations, each			UEP91	CENA6	8.29	115.85	18.20								
	Interoffice Channel Mileage - 2-Wire																
		Interoffice Channel Facilities Termination - Voice Grade			UEP91	M1GBC	22.60	39.36	26.62								
		Interoffice Channel mileage, per mile or fraction of mile			UEP91	M1GBM	0.013										
	Feature Activations (DS0) Centrex Loops on Channelized DS1 Service																
	D4 Channel Bank Feature Activations																
		Feature Activation on D-4 Channel Bank Centrex Loop Slot			UEP91	1PQWS	0.6497										
		Feature Activation on D-4 Channel Bank FX line Side Loop Slot			UEP91	1PQW6	0.6497										
		Feature Activation on D-4 Channel Bank FX Trunk Side Loop Slot			UEP91	1PQW7	0.6497										
		Feature Activation on D-4 Channel Bank Centrex Loop Slot - Different Wire Center			UEP91	1PQWP	0.6497										
		Feature Activation on D-4 Channel Bank Private Line Loop Slot			UEP91	1PQWV	0.6497										
		Feature Activation on D-4 Channel Bank Tjie Line/Trunk Loop Slot			UEP91	1PQWQ	0.6497										
		Feature Activation on D-4 Channel Bank WATS Loop Slot			UEP91	1PQWA	0.6497										
	Non-Recurring Charges (NRC) Associated with UNE-P Centrex																
		Conversion - Currently Combined Switch-As-Is with allowed changes, per port			UEP91	USAC2		0.10	0.10								
		Conversion of Existing Centrex Common Block			UEP91	USACN	0.00	36.66	16.10								
		New Centrex Standard Common Block			UEP91	M1ACS	0.00	680.40									
		New Centrex Customized Common Block			UEP91	M1ACC	0.00	680.40									
		Secondary Block, per Block			UEP91	M2CC1	0.00	79.31									
		NAR Establishment Charge, Per Occasion			UEP91	URECA	0.00	73.93									
	Additional Non-Recurring Charges (NRC)																
		Unbundled Miscellaneous Rate Element, Tag Loop at End Use Premise			UEP91	URETL		8.33	0.83								
		Unbundled Miscellaneous Rate Element, Tag Design Loop at End Use Premise			UEP91	URETN		11.20	1.10								
	UNE-P CENTREX - 5ESS (Valid in All States)																
	2-Wire VG Loop/2-Wire Voice Grade Port (Centrex) Combo																
	UNE Port/Loop Combination Rates (Non-Design)																
		2-Wire VG Loop/2-Wire Voice Grade Port (Centrex) Port Combo - Non-Design		1	UEP95		13.13										
		2-Wire VG Loop/2-Wire Voice Grade Port (Centrex)Port Combo - Non-Design		2	UEP95		23.75										
		2-Wire VG Loop/2-Wire Voice Grade Port (Centrex)Port Combo - Non-Design		3	UEP95		49.62										

UNBUNDLED NETWORK ELEMENTS - Louisiana													Attachment: 2		Exhibit: A	
CATEGORY	RATE ELEMENTS	Interim	Zone	BCS	USOC	RATES ($)					Svc Order Submitted Elec per LSR	Svc Order Submitted Manually per LSR	Incremental Charge - Manual Svc Order vs. Electronic-1st	Incremental Charge - Manual Svc Order vs. Electronic-Add'l	Incremental Charge - Manual Svc Order vs. Electronic-Disc 1st	Incremental Charge - Manual Svc Order vs. Electronic-Disc Add'l
						Rec	Nonrecurring		Nonrecurring Disconnect		OSS Rates ($)					
							First	Add'l	First	Add'l	SOMEC	SOMAN	SOMAN	SOMAN	SOMAN	SOMAN
UNE Port/Loop Combination Rates (Design)																
	2-Wire VG Loop/2-Wire Voice Grade Port (Centrex) Port Combo - Design		1	UEP95		16.29										
	2-Wire VG Loop/2-Wire Voice Grade Port (Centrex)Port Combo - Design		2	UEP95		26.71										
	2-Wire VG Loop/2-Wire Voice Grade Port (Centrex)Port Combo - Design		3	UEP95		51.82										
UNE Loop Rate																
	2-Wire Voice Grade Loop (SL 1) - Zone 1		1	UEP95	UECS1	11.77										
	2-Wire Voice Grade Loop (SL 1) - Zone 2		2	UEP95	UECS1	22.39										
	2-Wire Voice Grade Loop (SL 1) - Zone 3		3	UEP95	UECS1	48.26										
	2-Wire Voice Grade Loop (SL 2) - Zone 1		1	UEP95	UECS2	14.93										
	2-Wire Voice Grade Loop (SL 2) - Zone 2		2	UEP95	UECS2	25.35										
	2-Wire Voice Grade Loop (SL 2) - Zone 3		3	UEP95	UECS2	50.46										
UNE Port Rate																
All States																
	2-Wire Voice Grade Port (Centrex) Basic Local Area			UEP95	UEPYA	1.36	38.85	19.08								
	2-Wire Voice Grade Port (Centrex 800 termination)			UEP95	UEPYB	1.36	38.85	19.08								
	2-Wire Voice Grade Port (Centrex with Caller ID)1Basic Local Area			UEP95	UEPYH	1.36	38.85	19.08								
	2-Wire Voice Grade Port (Centrex from diff Serving Wire Center)2,3 Basic Local Area			UEP95	UEPYM	1.36	104.41	67.93								
	2-Wire Voice Grade Port, Diff Serving Wire Center 2,3 - 800 Service Term - Basic Local Area			UEP95	UEPYZ	1.36	104.41	67.93								
	2-Wire Voice Grade Port terminated in on Megalink or equivalent - Basic Local Area			UEP95	UEPY9	1.36	38.85	19.08								
	2-Wire Voice Grade Port Terminated on 800 Service Term - Basic Local Area			UEP95	UEPY2	1.36	38.85	19.08								
AL, KY, LA, MS, SC, & TN Only																
	2-Wire Voice Grade Port (Centrex)			UEP95	UEPQA	1.36	38.85	19.08								
	2-Wire Voice Grade Port (Centrex 800 termination)			UEP95	UEPQB	1.36	38.85	19.08								
	2-Wire Voice Grade Port (Centrex with Caller ID)1			UEP95	UEPQH	1.36	38.85	19.08								
	2-Wire Voice Grade Port (Centrex from diff Serving Wire Center)2,3			UEP95	UEPQM	1.36	104.41	67.93								
	2-Wire Voice Grade Port, Diff Serving Wire Center - 800 Service Term 2,3			UEP95	UEPQZ	1.36	104.41	67.93								
	2-Wire Voice Grade Port terminated in on Megalink or equivalent			UEP95	UEPQ9	1.36	38.85	19.08								
	2-Wire Voice Grade Port Terminated on 800 Service Term			UEP95	UEPQ2	1.36	38.85	19.08								
Local Switching																
	Centrex Intercom Funtionality, per port			UEP95	URECS	0.8577										
Local Number Portability																
	Local Number Portability (1 per port)			UEP95	LNPCC	0.35										
Features																
	All Standard Features Offered, per port			UEP95	UEPVF	0.00										
	All Select Features Offered, per port			UEP95	UEPVS	0.00	412.25									
	All Centrex Control Features Offered, per port			UEP95	UEPVC	0.00										
NARS																
	Unbundled Network Access Register - Combination			UEP95	UARCX	0.00	0.00	0.00	0.00	0.00						
	Unbundled Network Access Register - Indial			UEP95	UAR1X	0.00	0.00	0.00	0.00	0.00						
	Unbundled Network Access Register - Outdial			UEP95	UAROX	0.00	0.00	0.00	0.00	0.00						
Miscellaneous Terminations																
2-Wire Trunk Side																
	Trunk Side Terminations, each			UEP95	CEND6	8.29	115.85	18.20								
4-Wire Digital (1.544 Megabits)																
	DS1 Circuit Terminations, each			UEP95	M1HD1	68.47	196.18	92.92								
	DS0 Channels Activated, each			UEP95	M1HDO	0.00	14.06									
Interoffice Channel Mileage - 2-Wire																
	Interoffice Channel Facilities Termination			UEP95	M1GBC	22.60	39.36	26.62								

UNBUNDLED NETWORK ELEMENTS - Louisiana														Attachment: 2		Exhibit: A	
CATEGORY		RATE ELEMENTS	Interim	Zone	BCS	USOC	RATES ($)					Svc Order Submitted Elec per LSR	Svc Order Submitted Manually per LSR	Incremental Charge - Manual Svc Order vs. Electronic-1st	Incremental Charge - Manual Svc Order vs. Electronic-Add'l	Incremental Charge - Manual Svc Order vs. Electronic-Disc 1st	Incremental Charge - Manual Svc Order vs. Electronic-Disc Add'l
							Rec	Nonrecurring		Nonrecurring Disconnect		OSS Rates ($)					
								First	Add'l	First	Add'l	SOMEC	SOMAN	SOMAN	SOMAN	SOMAN	SOMAN
		Interoffice Channel mileage, per mile or fraction of mile			UEP95	M1GBM	0.013										
	Feature Activations (DS0) Centrex Loops on Channelized DS1 Service																
	D4 Channel Bank Feature Activations																
		Feature Activation on D-4 Channel Bank Centrex Loop Slot			UEP95	1PQWS	0.6497										
		Feature Activation on D-4 Channel Bank FX line Side Loop Slot			UEP95	1PQW6	0.6497										
		Feature Activation on D-4 Channel Bank FX Trunk Side Loop Slot			UEP95	1PQW7	0.6497										
		Feature Activation on D-4 Channel Bank Centrex Loop Slot - Different Wire Center			UEP95	1PQWP	0.6497										
		Feature Activation on D-4 Channel Bank Private Line Loop Slot			UEP95	1PQWV	0.6497										
		Feature Activation on D-4 Channel Bank Tjie Line/Trunk Loop Slot			UEP95	1PQWQ	0.6497										
		Feature Activation on D-4 Channel Bank WATS Loop Slot			UEP95	1PQWA	0.6497										
	Non-Recurring Charges (NRC) Associated with UNE-P Centrex																
		NRC Conversion Currently Combined Switch-As-Is with allowed changes, per port			UEP95	USAC2		0.10	0.10								
		Conversion of Existing Centrex Common Block, each			UEP95	USACN		36.66	16.10								
		New Centrex Standard Common Block			UEP95	M1ACS	0.00	680.40									
		New Centrex Customized Common Block			UEP95	M1ACC	0.00	680.40									
		NAR Establishment Charge, Per Occasion			UEP95	URECA	0.00	73.93									
	Additional Non-Recurring Charges (NRC)																
		Unbundled Miscellaneous Rate Element, Tag Loop at End Use Premise			UEP95	URETL		8.33	0.83								
		Unbundled Miscellaneous Rate Element, Tag Design Loop at End Use Premise			UEP95	URETN		11.20	1.10								
	UNE-P CENTREX - DMS100 (Valid in All States)																
	2-Wire VG Loop/2-Wire Voice Grade Port (Centrex) Combo																
	UNE Port/Loop Combination Rates (Non-Design)																
		2-Wire VG Loop/2-Wire Voice Grade Port (Centrex) Port Combo - Non-Design		1	UEP9D		13.13										
		2-Wire VG Loop/2-Wire Voice Grade Port (Centrex)Port Combo - Non-Design		2	UEP9D		23.75										
		2-Wire VG Loop/2-Wire Voice Grade Port (Centrex)Port Combo - Non-Design		3	UEP9D		49.62										
	UNE Port/Loop Combination Rates (Design)																
		2-Wire VG Loop/2-Wire Voice Grade Port (Centrex) Port Combo - Design		1	UEP9D		16.29										
		2-Wire VG Loop/2-Wire Voice Grade Port (Centrex)Port Combo - Design		2	UEP9D		26.71										
		2-Wire VG Loop/2-Wire Voice Grade Port (Centrex)Port Combo - Design		3	UEP9D		51.82										
	UNE Loop Rate																
		2-Wire Voice Grade Loop (SL 1) - Zone 1		1	UEP9D	UECS1	11.77										
		2-Wire Voice Grade Loop (SL 1) - Zone 2		2	UEP9D	UECS1	22.39										
		2-Wire Voice Grade Loop (SL 1) - Zone 3		3	UEP9D	UECS1	48.26										
		2-Wire Voice Grade Loop (SL 2) - Zone 1		1	UEP9D	UECS2	14.93										
		2-Wire Voice Grade Loop (SL 2) - Zone 2		2	UEP9D	UECS2	25.35										
		2-Wire Voice Grade Loop (SL 2) - Zone 3		3	UEP9D	UECS2	50.46										
	UNE Port Rate																
	ALL STATES																
		2-Wire Voice Grade Port (Centrex) Basic Local Area			UEP9D	UEPYA	1.36	38.85	19.08								
		2-Wire Voice Grade Port (Centrex 800 termination)Basic Local Area			UEP9D	UEPYB	1.36	38.85	19.08								
		2-Wire Voice Grade Port (Centrex / EBS-PSET)3Basic Local Area			UEP9D	UEPYC	1.36	38.85	19.08								
		2-Wire Voice Grade Port (Centrex / EBS-M5009)3Basic Local Area			UEP9D	UEPYD	1.36	38.85	19.08								

CATEGORY		RATE ELEMENTS	Interim	Zone	BCS	USOC	RATES ($)					Svc Order Submitted Elec per LSR	Svc Order Submitted Manually per LSR	Attachment: 2 Incremental Charge - Manual Svc Order vs. Electronic-1st	Attachment: 2 Incremental Charge - Manual Svc Order vs. Electronic-Add'l	Exhibit: A Incremental Charge - Manual Svc Order vs. Electronic-Disc 1st	Exhibit: A Incremental Charge - Manual Svc Order vs. Electronic-Disc Add'l
							Rec	Nonrecurring		Nonrecurring Disconnect		OSS Rates ($)					
								First	Add'l	First	Add'l	SOMEC	SOMAN	SOMAN	SOMAN	SOMAN	SOMAN
		2-Wire Voice Grade Port (Centrex / EBS-M5209))3 Basic Local Area			UEP9D	UEPYE	1.36	38.85	19.08								
		2-Wire Voice Grade Port (Centrex / EBS-M5112))3 Basic Local Area			UEP9D	UEPYF	1.36	38.85	19.08								
		2-Wire Voice Grade Port (Centrex / EBS-M5312))3Basic Local Area			UEP9D	UEPYG	1.36	38.85	19.08								
		2-Wire Voice Grade Port (Centrex / EBS-M5008))3 Basic Local Area			UEP9D	UEPYT	1.36	38.85	19.08								
		2-Wire Voice Grade Port (Centrex / EBS-M5208))3 Basic Local Area			UEP9D	UEPYU	1.36	38.85	19.08								
		2-Wire Voice Grade Port (Centrex / EBS-M5216))3 Basic Local Area			UEP9D	UEPYV	1.36	38.85	19.08								
		2-Wire Voice Grade Port (Centrex / EBS-M5316))3 Basic Local Area			UEP9D	UEPY3	1.36	38.85	19.08								
		2-Wire Voice Grade Port (Centrex with Caller ID) Basic Local Area			UEP9D	UEPYH	1.36	38.85	19.08								
		2-Wire Voice Grade Port (Centrex/Caller ID/Msg Wtg Lamp Indication))4 Basic Local Area			UEP9D	UEPYW	1.36	38.85	19.08								
		2-Wire Voice Grade Port (Centrex/Msg Wtg Lamp Indication))4 Basic Local Area			UEP9D	UEPYJ	1.36	38.85	19.08								
		2-Wire Voice Grade Port (Centrex from diff Serving Wire Center) 2,3-Basic Local Area			UEP9D	UEPYM	1.36	104.41	67.93								
		2-Wire Voice Grade Port (Centrex/differ SWC /EBS-PSET)2,3,4 Basic Local Area			UEP9D	UEPYO	1.36	104.41	67.93								
		2-Wire Voice Grade Port (Centrex/differ SWC /EBS-M5009)2,3,4 Basic Local Area			UEP9D	UEPYP	1.36	104.41	67.93								
		2-Wire Voice Grade Port (Centrex/differ SWC /EBS-5209)2,3,4 Basic Local Area			UEP9D	UEPYQ	1.36	104.41	67.93								
		2-Wire Voice Grade Port (Centrex/differ SWC /EBS-M5112)2,3,4 Basic Local Area			UEP9D	UEPYR	1.36	104.41	67.93								
		2-Wire Voice Grade Port (Centrex/differ SWC /EBS-M5312)2,3,4 Basic Local Area			UEP9D	UEPYS	1.36	104.41	67.93								
		2-Wire Voice Grade Port (Centrex/differ SWC /EBS-M5008)2,3,4 Basic Local Area			UEP9D	UEPY4	1.36	104.41	67.93								
		2-Wire Voice Grade Port (Centrex/differ SWC /EBS-M5208)2, 3 Basic Local Area			UEP9D	UEPY5	1.36	104.41	67.93								
		2-Wire Voice Grade Port (Centrex/differ SWC /EBS-M5216)2,3,4 Basic Local Area			UEP9D	UEPY6	1.36	104.41	67.93								
		2-Wire Voice Grade Port (Centrex/differ SWC /EBS-M5316)2,3,4 Basic Local Area			UEP9D	UEPY7	1.36	104.41	67.93								
		2-Wire Voice Grade Port, Diff Serving Wire Center - 800 Service Term 2,3			UEP9D	UEPYZ	1.36	104.41	67.93								
		2-Wire Voice Grade Port terminated in on Megalink or equivalent Basic Local Area			UEP9D	UEPY9	1.36	38.85	19.08								
		2-Wire Voice Grade Port Terminated on 800 Service Term Basic Local Area			UEP9D	UEPY2	1.36	38.85	19.08								
	AL, KY, LA, MS, SC, & TN Only																
		2-Wire Voice Grade Port (Centrex)			UEP9D	UEPQA	1.36	38.85	19.08								
		2-Wire Voice Grade Port (Centrex 800 termination)			UEP9D	UEPQB	1.36	38.85	19.08								
		2-Wire Voice Grade Port (Centrex / EBS-PSET)4			UEP9D	UEPQC	1.36	38.85	19.08								
		2-Wire Voice Grade Port (Centrex / EBS-M5009)4			UEP9D	UEPQD	1.36	38.85	19.08								
		2-Wire Voice Grade Port (Centrex / EBS-M5209)4			UEP9D	UEPQE	1.36	38.85	19.08								
		2-Wire Voice Grade Port (Centrex / EBS-M5112)4			UEP9D	UEPQF	1.36	38.85	19.08								
		2-Wire Voice Grade Port (Centrex / EBS-M5312)4			UEP9D	UEPQG	1.36	38.85	19.08								
		2-Wire Voice Grade Port (Centrex / EBS-M5008)4			UEP9D	UEPQT	1.36	38.85	19.08								
		2-Wire Voice Grade Port (Centrex / EBS-M5208)4			UEP9D	UEPQU	1.36	38.85	19.08								
		2-Wire Voice Grade Port (Centrex / EBS-M5216)4			UEP9D	UEPQV	1.36	38.85	19.08								
		2-Wire Voice Grade Port (Centrex / EBS-M5316)4			UEP9D	UEPQ3	1.36	38.85	19.08								
		2-Wire Voice Grade Port (Centrex with Caller ID)			UEP9D	UEPQH	1.36	38.85	19.08								

UNBUNDLED NETWORK ELEMENTS - Louisiana														Attachment: 2		Exhibit: A	
CATEGORY		RATE ELEMENTS	Interim	Zone	BCS	USOC	RATES ($)					Svc Order Submitted Elec per LSR	Svc Order Submitted Manually per LSR	Incremental Charge - Manual Svc Order vs. Electronic-1st	Incremental Charge - Manual Svc Order vs. Electronic-Add'l	Incremental Charge - Manual Svc Order vs. Electronic-Disc 1st	Incremental Charge - Manual Svc Order vs. Electronic-Disc Add'l
							Rec	Nonrecurring		Nonrecurring Disconnect		OSS Rates ($)					
								First	Add'l	First	Add'l	SOMEC	SOMAN	SOMAN	SOMAN	SOMAN	SOMAN
		2-Wire Voice Grade Port (Centrex/Caller ID/Msg Wtg Lamp Indication)4			UEP9D	UEPQW	1.36	38.85	19.08								
		2-Wire Voice Grade Port (Centrex/Msg Wtg Lamp Indication)4			UEP9D	UEPQJ	1.36	38.85	19.08								
		2-Wire Voice Grade Port (Centrex from diff Serving Wire Center) 2,3			UEP9D	UEPQM	1.36	104.41	67.93								
		2-Wire Voice Grade Port (Centrex/differ SWC /EBS-PSET)2,3,4			UEP9D	UEPQO	1.36	104.41	67.93								
		2-Wire Voice Grade Port (Centrex/differ SWC /EBS-M5009)2,3,4			UEP9D	UEPQP	1.36	104.41	67.93								
		2-Wire Voice Grade Port (Centrex/differ SWC /EBS-5209)2,3,4			UEP9D	UEPQQ	1.36	104.41	67.93								
		2-Wire Voice Grade Port (Centrex/differ SWC /EBS-M5112)2,3,4			UEP9D	UEPQR	1.36	104.41	67.93								
		2-Wire Voice Grade Port (Centrex/differ SWC /EBS-M5312)2,3,4			UEP9D	UEPQS	1.36	104.41	67.93								
		2-Wire Voice Grade Port (Centrex/differ SWC /EBS-M5008)2,3,4			UEP9D	UEPQ4	1.36	104.41	67.93								
		2-Wire Voice Grade Port (Centrex/differ SWC /EBS-M5208)2,3,4			UEP9D	UEPQ5	1.36	104.41	67.93								
		2-Wire Voice Grade Port (Centrex/differ SWC /EBS-M5216)2,3,4			UEP9D	UEPQ6	1.36	104.41	67.93								
		2-Wire Voice Grade Port (Centrex/differ SWC /EBS-M5316)2,3,4			UEP9D	UEPQ7	1.36	104.41	67.93								
		2-Wire Voice Grade Port, Diff Serving Wire Center - 800 Service Term 2,3			UEP9D	UEPQZ	1.36	104.41	67.93								
		2-Wire Voice Grade Port terminated in on Megalink or equivalent			UEP9D	UEPQ9	1.36	38.85	19.08								
		2-Wire Voice Grade Port Terminated on 800 Service Term			UEP9D	UEPQ2	1.36	38.85	19.08								
	Local Switching																
		Centrex Intercom Funtionality, per port			UEP9D	URECS	0.8577										
	Local Number Portability																
		Local Number Portability (1 per port)			UEP9D	LNPCC	0.35										
	Features																
		All Standard Features Offered, per port			UEP9D	UEPVF	0.00										
		All Select Features Offered, per port			UEP9D	UEPVS	0.00	412.25									
		All Centrex Control Features Offered, per port			UEP9D	UEPVC	0.00										
	NARS																
		Unbundled Network Access Register - Combination			UEP9D	UARCX	0.00	0.00	0.00	0.00	0.00						
		Unbundled Network Access Register - Inward			UEP9D	UAR1X	0.00	0.00	0.00	0.00	0.00						
		Unbundled Network Access Register - Outdial			UEP9D	UAROX	0.00	0.00	0.00	0.00	0.00						
	Miscellaneous Terminations																
	2-Wire Trunk Side																
		Trunk Side Terminations, each			UEP9D	CEND6	8.29	115.85	18.20								
	4-Wire Digital (1.544 Megabits)																
		DS1 Circuit Terminations, each			UEP9D	M1HD1	68.47	196.18	98.62								
		DS0 Channels Activiated per Channel			UEP9D	M1HDO	0.00	14.06									
	Interoffice Channel Mileage - 2-Wire																
		Interoffice Channel Facilities Termination			UEP9D	M1GBC	22.60	39.36	26.62								
		Interoffice Channel mileage, per mile or fraction of mile			UEP9D	M1GBM	0.013										
	Feature Activations (DS0) Centrex Loops on Channelized DS1 Service																
	D4 Channel Bank Feature Activations																
		Feature Activation on D-4 Channel Bank Centrex Loop Slot			UEP9D	1PQWS	0.6497										
		Feature Activation on D-4 Channel Bank FX line Side Loop Slot			UEP9D	1PQW6	0.6497										
		Feature Activation on D-4 Channel Bank FX Trunk Side Loop Slot			UEP9D	1PQW7	0.6497										
		Feature Activation on D-4 Channel Bank Centrex Loop Slot - Different Wire Center			UEP9D	1PQWP	0.6497										

UNBUNDLED NETWORK ELEMENTS - Louisiana														Attachment: 2		Exhibit: A	
CATEGORY		RATE ELEMENTS	Interim	Zone	BCS	USOC	RATES ($)					Svc Order Submitted Elec per LSR	Svc Order Submitted Manually per LSR	Incremental Charge - Manual Svc Order vs. Electronic-1st	Incremental Charge - Manual Svc Order vs. Electronic-Add'l	Incremental Charge - Manual Svc Order vs. Electronic-Disc 1st	Incremental Charge - Manual Svc Order vs. Electronic-Disc Add'l
							Rec	Nonrecurring		Nonrecurring Disconnect		OSS Rates ($)					
								First	Add'l	First	Add'l	SOMEC	SOMAN	SOMAN	SOMAN	SOMAN	SOMAN
		Feature Activation on D-4 Channel Bank Private Line Loop Slot			UEP9D	1PQWV	0.6497										
		Feature Activation on D-4 Channel Bank Tjie Line/Trunk Loop Slot			UEP9D	1PQWQ	0.6497										
		Feature Activation on D-4 Channel Bank WATS Loop Slot			UEP9D	1PQWA	0.6497										
	Non-Recurring Charges (NRC) Associated with UNE-P Centrex																
		NRC Conversion Currently Combined Switch-As-Is with allowed changes, per port			UEP9D	USAC2		0.10	0.10								
		Conversion of existing Centrex Common Block, each			UEP9D	USACN		36.66	16.10								
		New Centrex Standard Common Block			UEP9D	M1ACS	0.00	680.40									
		New Centrex Customized Common Block			UEP9D	M1ACC	0.00	680.40									
		NAR Establishment Charge, Per Occasion			UEP9D	URECA	0.00	73.93									
	Additional Non-Recurring Charges (NRC)																
		Unbundled Miscellaneous Rate Element, Tag Loop at End Use Premise			UEP9D	URETL		8.33	0.83								
		Unbundled Miscellaneous Rate Element, Tag Design Loop at End Use Premise			UEP9D	URETN		11.20	1.10								
	UNE-P CENTREX - EWSD (Valid in AL, FL, KY, LA, MS & TN)																
	2-Wire VG Loop/2-Wire Voice Grade Port (Centrex) Combo																
	UNE Port/Loop Combination Rates (Non-Design)																
		2-Wire VG Loop/2-Wire Voice Grade Port (Centrex) Port Combo - Non-Design		1	UEP9E		13.13										
		2-Wire VG Loop/2-Wire Voice Grade Port (Centrex)Port Combo - Non-Design		2	UEP9E		23.75										
		2-Wire VG Loop/2-Wire Voice Grade Port (Centrex)Port Combo - Non-Design		3	UEP9E		49.62										
	UNE Port/Loop Combination Rates (Design)																
		2-Wire VG Loop/2-Wire Voice Grade Port (Centrex) Port Combo - Design		1	UEP9E		16.29										
		2-Wire VG Loop/2-Wire Voice Grade Port (Centrex)Port Combo - Design		2	UEP9E		26.71										
		2-Wire VG Loop/2-Wire Voice Grade Port (Centrex)Port Combo - Design		3	UEP9E		51.82										
	UNE Loop Rate																
		2-Wire Voice Grade Loop (SL 1) - Zone 1		1	UEP9E	UECS1	11.77										
		2-Wire Voice Grade Loop (SL 1) - Zone 2		2	UEP9E	UECS1	22.39										
		2-Wire Voice Grade Loop (SL 1) - Zone 3		3	UEP9E	UECS1	48.26										
		2-Wire Voice Grade Loop (SL 2) - Zone 1		1	UEP9E	UECS2	14.93										
		2-Wire Voice Grade Loop (SL 2) - Zone 2		2	UEP9E	UECS2	25.35										
		2-Wire Voice Grade Loop (SL 2) - Zone 3		3	UEP9E	UECS2	50.46										
	UNE Port Rate																
	AL, FL, KY, LA, MS, & TN only																
		2-Wire Voice Grade Port (Centrex) Basic Local Area			UEP9E	UEPYA	1.36	38.85	19.08								
		2-Wire Voice Grade Port (Centrex 800 termination)Basic Local Area			UEP9E	UEPYB	1.36	38.85	19.08								
		2-Wire Voice Grade Port (Centrex with Caller ID)1Basic Local Area			UEP9E	UEPYH	1.36	38.85	19.08								
		2-Wire Voice Grade Port (Centrex from diff Serving Wire Center)2,3 Basic Local Area			UEP9E	UEPYM	1.36	104.41	67.93								
		2-Wire Voice Grade Port, Diff Serving Wire Center 2,3 - 800 Service Term - Basic Local Area			UEP9E	UEPYZ	1.36	104.41	67.93								
		2-Wire Voice Grade Port terminated in on Megalink or equivalent - Basic Local Area			UEP9E	UEPY9	1.36	38.85	19.08								
		2-Wire Voice Grade Port Terminated on 800 Service Term - Basic Local Area			UEP9E	UEPY2	1.36	38.85	19.08								
	AL, KY, LA, MS, & TN Only																
		2-Wire Voice Grade Port (Centrex)			UEP9E	UEPQA	1.36	38.85	19.08								
		2-Wire Voice Grade Port (Centrex 800 termination)			UEP9E	UEPQB	1.36	38.85	19.08								
		2-Wire Voice Grade Port (Centrex with Caller ID)1			UEP9E	UEPQH	1.36	38.85	19.08								

CATEGORY	RATE ELEMENTS	Interim	Zone	BCS	USOC	RATES ($)					Svc Order Submitted Elec per LSR	Svc Order Submitted Manually per LSR	Incremental Charge - Manual Svc Order vs. Electronic-1st	Incremental Charge - Manual Svc Order vs. Electronic-Add'l	Incremental Charge - Manual Svc Order vs. Electronic-Disc 1st	Incremental Charge - Manual Svc Order vs. Electronic-Disc Add'l
						Rec	Nonrecurring		Nonrecurring Disconnect		OSS Rates ($)					
							First	Add'l	First	Add'l	SOMEC	SOMAN	SOMAN	SOMAN	SOMAN	SOMAN
	2-Wire Voice Grade Port (Centrex from diff Serving Wire Center)2,3			UEP9E	UEPQM	1.36	104.41	67.93								
	2-Wire Voice Grade Port, Diff Serving Wire Center 2,3 - 800 Service Term			UEP9E	UEPQZ	1.36	104.41	67.93								
	2-Wire Voice Grade Port terminated in on Megalink or equivalent			UEP9E	UEPQ9	1.36	38.85	19.08								
	2-Wire Voice Grade Port Terminated on 800 Service Term			UEP9E	UEPQ2	1.36	38.85	19.08								
Local Switching																
	Centrex Intercom Funtionality, per port			UEP9E	URECS	0.8577										
Local Number Portability																
	Local Number Portability (1 per port)			UEP9E	LNPCC	0.35										
Features																
	All Standard Features Offered, per port			UEP9E	UEPVF	0.00										
	All Select Features Offered, per port			UEP9E	UEPVS	0.00	412.25									
	All Centrex Control Features Offered, per port			UEP9E	UEPVC	0.00										
NARS																
	Unbundled Network Access Register - Combination			UEP9E	UARCX	0.00	0.00	0.00	0.00	0.00						
	Unbundled Network Access Register - Indial			UEP9E	UAR1X	0.00	0.00	0.00	0.00	0.00						
	Unbundled Network Access Register - Outdial			UEP9E	UAROX	0.00	0.00	0.00	0.00	0.00						
Miscellaneous Terminations																
2-Wire Trunk Side																
	Trunk Side Terminations, each			UEP9E	CEND6	8.29	115.85	18.20								
4-Wire Digital (1.544 Megabits)																
	DS1 Circuit Terminations, each			UEP9E	M1HD1	68.47	196.18	92.92								
	DS0 Channel Activated Per Channel			UEP9E	M1HDO	0.00	14.06									
Interoffice Channel Mileage - 2-Wire																
	Interoffice Channel Facilities Termination			UEP9E	M1GBC	22.60	39.36	26.62								
	Interoffice Channel mileage, per mile or fraction of mile			UEP9E	M1GBM	0.013										
Feature Activations (DS0) Centrex Loops on Channelized DS1 Service																
D4 Channel Bank Feature Activations																
	Feature Activation on D-4 Channel Bank Centrex Loop Slot			UEP9E	1PQWS	0.6497										
	Feature Activation on D-4 Channel Bank FX line Side Loop Slot			UEP9E	1PQW6	0.6497										
	Feature Activation on D-4 Channel Bank FX Trunk Side Loop Slot			UEP9E	1PQW7	0.6497										
	Feature Activation on D-4 Channel Bank Centrex Loop Slot - Different Wire Center			UEP9E	1PQWP	0.6497										
	Feature Activation on D-4 Channel Bank Private Line Loop Slot			UEP9E	1PQWV	0.6497										
	Feature Activation on D-4 Channel Bank Tjie Line/Trunk Loop Slot			UEP9E	1PQWQ	0.6497										
	Feature Activation on D-4 Channel Bank WATS Loop Slot			UEP9E	1PQWA	0.6497										
Non-Recurring Charges (NRC) Associated with UNE-P Centrex																
	NRC Conversion Currently Combined Switch-As-Is with allowed changes, per port			UEP9E	USAC2		0.10	0.10								
	Conversion of Existing Centrex Common Block, each			UEP9E	USACN		36.66	16.10								
	New Centrex Standard Common Block			UEP9E	M1ACS	0.00	680.40									
	New Centrex Customized Common Block			UEP9E	M1ACC	0.00	680.40									
	NAR Establishment Charge, Per Occasion			UEP9E	URECA	0.00	73.93									
Additional Non-Recurring Charges (NRC)																
	Unbundled Miscellaneous Rate Element, Tag Loop at End Use Premise			UEP9E	URETL		8.33	0.83								
	Unbundled Miscellaneous Rate Element, Tag Design Loop at End Use Premise			UEP9E	URETN		11.20	1.10								
UNE-P CENTREX - DCO - Valid in AL, KY, LA, MS, & TN)																
2-Wire VG Loop/2-Wire Voice Grade Port (Centrex) Combo																
UNE Port/Loop Combination Rates (Non-Design)																
	2-Wire VG Loop/2-Wire Voice Grade Port (Centrex) Port Combo - Non-Design		1	UEP93		13.13										

UNBUNDLED NETWORK ELEMENTS - Louisiana													Attachment: 2		Exhibit: A	
CATEGORY	RATE ELEMENTS	Interim	Zone	BCS	USOC	RATES ($)					Svc Order Submitted Elec per LSR	Svc Order Submitted Manually per LSR	Incremental Charge - Manual Svc Order vs. Electronic-1st	Incremental Charge - Manual Svc Order vs. Electronic-Add'l	Incremental Charge - Manual Svc Order vs. Electronic-Disc 1st	Incremental Charge - Manual Svc Order vs. Electronic-Disc Add'l
						Rec	Nonrecurring		Nonrecurring Disconnect		OSS Rates ($)					
							First	Add'l	First	Add'l	SOMEC	SOMAN	SOMAN	SOMAN	SOMAN	SOMAN
	2-Wire VG Loop/2-Wire Voice Grade Port (Centrex)Port Combo - Non-Design		2	UEP93		23.75										
	2-Wire VG Loop/2-Wire Voice Grade Port (Centrex)Port Combo - Non-Design		3	UEP93		49.62										
UNE Port/Loop Combination Rates (Design)																
	2-Wire VG Loop/2-Wire Voice Grade Port (Centrex) Port Combo - Design		1	UEP93		16.29										
	2-Wire VG Loop/2-Wire Voice Grade Port (Centrex)Port Combo - Design		2	UEP93		26.71										
	2-Wire VG Loop/2-Wire Voice Grade Port (Centrex)Port Combo - Design		3	UEP93		51.82										
UNE Loop Rate																
	2-Wire Voice Grade Loop (SL 1) - Zone 1		1	UEP93	UECS1	11.77										
	2-Wire Voice Grade Loop (SL 1) - Zone 2		2	UEP93	UECS1	22.36										
	2-Wire Voice Grade Loop (SL 1) - Zone 3		3	UEP93	UECS1	48.26										
	2-Wire Voice Grade Loop (SL 2) - Zone 1		1	UEP93	UECS2	14.93										
	2-Wire Voice Grade Loop (SL 2) - Zone 2		2	UEP93	UECS2	25.35										
	2-Wire Voice Grade Loop (SL 2) - Zone 3		3	UEP93	UECS2	50.46										
UNE Port Rate																
AL, KY, LA, MS, & TN only																
	2-Wire Voice Grade Port (Centrex) Basic Local Area			UEP93	UEPYA	1.36	38.85	19.08								
	2-Wire Voice Grade Port (Centrex 800 termination)Basic Local Area			UEP93	UEPYB	1.36	38.85	19.08								
	2-Wire Voice Grade Port (Centrex with Caller ID)1Basic Local Area			UEP93	UEPYH	1.36	38.85	19.08								
	2-Wire Voice Grade Port (Centrex from diff Serving Wire Center)2,3 Basic Local Area			UEP93	UEPYM	1.36	104.41	67.93								
	2-Wire Voice Grade Port, Diff Serving Wire Center - 2,3 - 800 Service Term - Basic Local Area			UEP93	UEPYZ	1.36	104.41	67.93								
	2-Wire Voice Grade Port terminated in on Megalink or equivalent - Basic Local Area			UEP93	UEPY9	1.36	38.85	19.08								
	2-Wire Voice Grade Port Terminated on 800 Service Term - Basic Local Area			UEP93	UEPY2	1.36	38.85	19.08								
	2-Wire Voice Grade Port (Centrex)			UEP93	UEPQA	1.36	38.85	19.08								
	2-Wire Voice Grade Port (Centrex 800 termination)			UEP93	UEPQB	1.36	38.85	19.08								
	2-Wire Voice Grade Port (Centrex with Caller ID)1			UEP93	UEPQH	1.36	38.85	19.08								
	2-Wire Voice Grade Port (Centrex from diff Serving Wire Center)2,3			UEP93	UEPQM	1.36	104.41	67.93								
	2-Wire Voice Grade Port, Diff Serving Wire Center - 2,3 -800 Service Term			UEP93	UEPQZ	1.36	104.41	67.93								
	2-Wire Voice Grade Port terminated in on Megalink or equivalent			UEP93	UEPQ9	1.36	38.85	19.08								
	2-Wire Voice Grade Port Terminated on 800 Service Term			UEP93	UEPQ2	1.36	38.85	19.08								
Local Switching																
	Centrex Intercom Funtionality, per port			UEP93	URECS	0.8577										
Local Number Portability																
	Local Number Portability (1 per port)			UEP93	LNPCC	0.35										
Features																
	All Standard Features Offered, per port			UEP93	UEPVF	0.00	73.93	27.14								
	All Centrex Control Features Offered, per port			UEP93	UEPVC	0.00	73.93	27.14								
NARS																
	Unbundled Network Access Register - Combination			UEP93	UARCX	0.00	0.00	0.00	0.00	0.00						
	Unbundled Network Access Register - Indial			UEP93	UAR1X	0.00	0.00	0.00	0.00	0.00						
	Unbundled Network Access Register - Outdial			UEP93	UAROX	0.00	0.00	0.00	0.00	0.00						
Miscellaneous Terminations																
2-Wire Trunk Side																
	Trunk Side Terminations, each			UEP93	CEND6	8.27	115.85	18.20								
4-Wire Digital (1.544 Megabits)																
	DS1 Circuit Terminations, each			UEP93	M1HD1	68.47	196.18	92.92								

UNBUNDLED NETWORK ELEMENTS - Louisiana														Attachment: 2		Exhibit: A	
CATEGORY		RATE ELEMENTS	Interim	Zone	BCS	USOC	RATES ($)					Svc Order Submitted Elec per LSR	Svc Order Submitted Manually per LSR	Incremental Charge - Manual Svc Order vs. Electronic-1st	Incremental Charge - Manual Svc Order vs. Electronic-Add'l	Incremental Charge - Manual Svc Order vs. Electronic-Disc 1st	Incremental Charge - Manual Svc Order vs. Electronic-Disc Add'l
							Rec	Nonrecurring		Nonrecurring Disconnect		OSS Rates ($)					
								First	Add'l	First	Add'l	SOMEC	SOMAN	SOMAN	SOMAN	SOMAN	SOMAN
		DS0 Channels Activated, Per Channel			UEP93	M1HDO	0.00	14.06									
	Interoffice Channel Mileage - 2-Wire																
		Interoffice Channel Facilities Termination			UEP93	M1GBC	22.60	39.36	26.62								
		Interoffice Channel mileage, per mile or fraction of mile			UEP93	M1GBM	0.013										
	Feature Activations (DS0) Centrex Loops on Channelized DS1 Service																
	D4 Channel Bank Feature Activations																
		Feature Activation on D-4 Channel Bank Centrex Loop Slot			UEP93	1PQWS	0.6497										
		Feature Activation on D-4 Channel Bank FX Line Side Loop Slot			UEP93	1PQW6	0.6497										
		Feature Activation on D-4 Channel Bank FX Trunk Side Loop Slot			UEP93	1PQW7	0.6497										
		Feature Activation on D-4 Channel Bank Centrex Loop Slot - Different Wire Center			UEP93	1PQWP	0.6497										
		Feature Activation on D-4 Channel Bank Private Line Loop Slot			UEP93	1PQWV	0.6497										
		Feature Activation on D-4 Channel Bank Tie Line/Trunk Loop Slot			UEP93	1PQWQ	0.6497										
		Feature Activation on D-4 Channel Bank WATS Loop Slot			UEP93	1PQWA	0.6497										
	Non-Recurring Charges (NRC) Associated with UNE-P Centrex																
		NRC Conversion Currently Combined Switch-As-Is with allowed changes, per port			UEP93	USAC2		0.10	0.10								
		Conversion of Existing Centrex Common Block, each			UEP93	USACN		36.66	16.10								
		New Centrex Standard Common Block			UEP93	M1ACS	0.00	680.40									
		New Centrex Customized Common Block			UEP93	M1ACC	0.00	680.40									
		NAR Establishment Charge, Per Occasion			UEP93	URECA	0.00	73.93									
	Additional Non-Recurring Charges (NRC)																
		Unbundled Miscellaneous Rate Element, Tag Loop at End Use Premise			UEP93	URETL		8.33	0.83								
		Unbundled Miscellaneous Rate Element, Tag Design Loop at End Use Premise			UEP93	URETN		11.20	1.10								
	Note 1 - Required Port for Centrex Control in 1AESS, 5ESS & EWSD																
	Note 2 - Requres Interoffice Channel Mileage																
	Note 3 - Installation is combination of Installation charge for SL2 Loop and Port																
	Note 4 - Requires Specific Customer Premises Equipment																
	Note: Rates displaying an "R" in Interim column are interim and subject to rate true-up as set forth in General Terms and Conditions.																

UNBUNDLED NETWORK ELEMENTS - Mississippi														Attachment: 2		Exhibit: A	
CATEGORY		RATE ELEMENTS	Interim	Zone	BCS	USOC	RATES ($)					Svc Order Submitted Elec per LSR	Svc Order Submitted Manually per LSR	Incremental Charge - Manual Svc Order vs. Electronic-1st	Incremental Charge - Manual Svc Order vs. Electronic-Add'l	Incremental Charge - Manual Svc Order vs. Electronic-Disc 1st	Incremental Charge - Manual Svc Order vs. Electronic-Disc Add'l
							Rec	Nonrecurring		Nonrecurring Disconnect		OSS Rates ($)					
								First	Add'l	First	Add'l	SOMEC	SOMAN	SOMAN	SOMAN	SOMAN	SOMAN
	The "Zone" shown in the sections for stand-alone loops or loops as part of a combination refers to Geographically Deaveraged UNE Zones. To view Geographically Deaveraged UNE Zone Designations by Central Office, refer to internet Website: http://www.interconnection.bellsouth.com/become_a_clec/html/interconnection.htm																
OPERATIONAL SUPPORT SYSTEMS (OSS) - "REGIONAL RATES"																	
	NOTE: (1) CLEC should contact its contract negotiator if it prefers the "state specific" OSS charges as ordered by the State Commissions. The OSS charges currently contained in this rate exhibit are the BellSouth "regional" service ordering charges. CLEC may elect either the state specific Commission ordered rates for the service ordering charges, or CLEC may elect the regional service ordering charge, however, CLEC can not obtain a mixture of the two regardless if CLEC has a interconnection contract established in each of the 9 states.																
	NOTE: (2) Any element that can be ordered electronically will be billed according to the SOMEC rate listed in this category. Please refer to BellSouth's Local Ordering Handbook (LOH) to determine if a product can be ordered electronically. For those elements that cannot be ordered electronically at present per the LOH, the listed SOMEC rate in this category reflects the charge that would be billed to a CLEC once electronic ordering capabilities come on-line for that element. Otherwise, the manual ordering charge, SOMAN, will be applied to a CLECs bill when it submits an LSR to BellSouth.																
		OSS - Electronic Service Order Charge, Per Local Service Request (LSR) - UNE Only				SOMEC		3.50	0.00	3.50	0.00						
		OSS - Manual Service Order Charge, Per Local Service Request (LSR) - UNE Only				SOMAN		15.75	0.00	1.97	0.00						
UNE SERVICE DATE ADVANCEMENT CHARGE																	
	NOTE: The Expedite charge will be maintained commensurate with BellSouth's FCC No.1 Tariff, Section 5 as applicable.																
		UNE Expedite Charge per Circuit or Line Assignable USOC, per Day			UAL, UEANL, UCL, UEF, UDF, UEQ, UDL, UENTW, UDN, UEA, UHL, ULC, USL, U1T12, U1T48, U1TD1, U1TD3, U1TDX, U1TO3, U1TS1, U1TVX, UC1BC, UC1BL, UC1CC, UC1CL, UC1DC, UC1DL, UC1EC, UC1EL, UC1FC, UC1FL, UC1GC, UC1GL, UC1HC, UC1HL, UDL12, UDL48, UDLO3, UDLSX, UE3, ULD12, ULD48, ULDD1, ULDD3, ULDDX, ULDO3, ULDS1, ULDVX, UNC1X, UNC3X, UNCDX, UNCNX, UNCSX, UNCVX, UNLD1, UNLD3, UXTD1, UXTD3, UXTS1, U1TUC, U1TUD, U1TUB, U1TUA	SDASP		200.00									
UNBUNDLED EXCHANGE ACCESS LOOP																	
	2-WIRE ANALOG VOICE GRADE LOOP																
		2-Wire Analog Voice Grade Loop - Service Level 1- Zone 1		1	UEANL	UEAL2	12.03	37.92	17.55	23.48	5.25						
		2-Wire Analog Voice Grade Loop - Service Level 1- Zone 2		2	UEANL	UEAL2	16.87	37.92	17.55	23.48	5.25						
		2-Wire Analog Voice Grade Loop - Service Level 1- Zone 3		3	UEANL	UEAL2	25.68	37.92	17.55	23.48	5.25						
		2-Wire Analog Voice Grade Loop - Service Level 1-Zone 4		4	UEANL	UEAL2	43.85	37.92	17.55	23.48	5.25						
		2-Wire Analog Voice Grade Loop - Service Level 1- Zone 1		1	UEANL	UEASL	12.03	37.92	17.55	23.48	5.25						
		2-Wire Analog Voice Grade Loop - Service Level 1- Zone 2		2	UEANL	UEASL	16.87	37.92	17.55	23.48	5.25						
		2-Wire Analog Voice Grade Loop - Service Level 1- Zone 3		3	UEANL	UEASL	25.68	37.92	17.55	23.48	5.25						
		2-Wire Analog Voice Grade Loop - Service Level 1-Zone 4		4	UEANL	UEASL	43.85	37.92	17.55	23.48	5.25						
		Unbundled Miscellaneous Rate Element, Tag Loop at End User Premise			UEANL	URETL		8.33	0.83								
		Loop Testing - Basic 1st Half Hour			UEANL	URET1		34.36	34.36								

CATEGORY	RATE ELEMENTS	Interim	Zone	BCS	USOC	RATES ($)					Svc Order Submitted Elec per LSR	Svc Order Submitted Manually per LSR	Attachment: 2 Incremental Charge - Manual Svc Order vs. Electronic-1st	Attachment: 2 Incremental Charge - Manual Svc Order vs. Electronic-Add'l	Exhibit: A Incremental Charge - Manual Svc Order vs. Electronic-Disc 1st	Exhibit: A Incremental Charge - Manual Svc Order vs. Electronic-Disc Add'l
						Rec	Nonrecurring		Nonrecurring Disconnect		OSS Rates ($)					
							First	Add'l	First	Add'l	SOMEC	SOMAN	SOMAN	SOMAN	SOMAN	SOMAN
	Loop Testing - Basic Additional Half Hour			UEANL	URETA		19.97	19.97								
	CLEC to CLEC Conversion Charge Without Outside Dispatch			UEANL	UREWO		15.75	8.92								
	Unbundled Voice Loop, Non-Design Voice Loop, billing for BST providing make-up (Engineering Information - E.I.)			UEANL	UEANM		13.51	13.51								
	Manual Order Coordination for UVL-SL1s (per loop)			UEANL	UEAMC		8.20	8.20								
	Order Coordination for Specified Conversion Time for UVL-SL1 (per LSR)			UEANL	OCOSL		18.19	18.19								
2-WIRE Unbundled COPPER LOOP																
	2-Wire Unbundled Copper Loop - Non-Designed Zone 1		1	UEQ	UEQ2X	11.01	36.53	16.16	22.66	4.42						
	2 Wire Unbundled Copper Loop - Non-Designed - Zone 2		2	UEQ	UEQ2X	11.51	36.53	16.16	22.66	4.42						
	2 Wire Unbundled Copper Loop - Non-Designed - Zone 3		3	UEQ	UEQ2X	11.57	36.53	16.16	22.66	4.42						
	2 Wire Unbundled Copper Loop - Non-Designed - Zone 4		4	UEQ	UEQ2X	13.10	36.53	16.16	22.66	4.42						
	Unbundled Miscellaneous Rate Element, Tag Loop at End User Premise			UEQ	URETL		8.33	0.83								
	Manual Order Coordination 2 Wire Unbundled Copper Loop - Non-Designed (per loop)			UEQ	USBMC		8.20	8.20								
	Unbundled Copper Loop, Non-Design Copper Loop, billing for BST providing make-up (Engineering Information - E.I.)			UEQ	UEQMU		13.51	13.51								
	Loop Testing - Basic 1st Half Hour			UEQ	URET1		34.36	34.36								
	Loop Testing - Basic Additional Half Hour			UEQ	URETA		19.97	19.97								
	CLEC to CLEC Conversion Charge Without Outside Dispatch			UEQ	UREWO		14.24	7.42								
UNBUNDLED EXCHANGE ACCESS LOOP																
2-WIRE ANALOG VOICE GRADE LOOP																
	2 Wire Analog Voice Grade Loop-Service Level 1-Line Splitting-Zone 1		1	UEPSR UEPSB	UEALS	12.03	37.92	17.55	23.48	5.25						
	2 Wire Analog Voice Grade Loop-Service Level 1-Line Splitting-Zone 1		1	UEPSR UEPSB	UEABS	12.03	37.92	17.55	23.48	5.25						
	2 Wire Analog Voice Grade Loop- Service Level 1-Line Splitting-Zone 2		2	UEPSR UEPSB	UEALS	16.87	37.92	17.55	23.48	5.25						
	2 Wire Analog Voice Grade Loop- Service Level 1-Line Splitting-Zone 2		2	UEPSR UEPSB	UEABS	16.87	37.92	17.55	23.48	5.25						
	2 Wire Analog Voice Grade Loop-Service Level 1-Line Splitting-Zone 3		3	UEPSR UEPSB	UEALS	25.68	37.92	17.55	23.48	5.25						
	2 Wire Analog Voice Grade Loop-Service Level 1-Line Splitting-Zone 3		3	UEPSR UEPSB	UEABS	25.68	37.92	17.55	23.48	5.25						
	2 Wire Analog Voice Grade Loop-Service Level 1-Line Splitting-Zone 4		4	UEPSR UEPSB	UEALS	43.85	37.92	17.55	23.48	5.25						
	2 Wire Analog Voice Grade Loop-Service Level 1-Line Splitting-Zone 4		4	UEPSR UEPSB	UEABS	43.85	37.92	17.55	23.48	5.25						
UNBUNDLED EXCHANGE ACCESS LOOP																
2-WIRE ANALOG VOICE GRADE LOOP																
	2-Wire Analog Voice Grade Loop - Service Level 2 w/Loop or Ground Start Signaling - Zone 1		1	UEA	UEAL2	13.89	105.96	68.28	52.82	10.37						
	2-Wire Analog Voice Grade Loop - Service Level 2 w/Loop or Ground Start Signaling - Zone 2		2	UEA	UEAL2	18.75	105.96	68.28	52.82	10.37						
	2-Wire Analog Voice Grade Loop - Service Level 2 w/Loop or Ground Start Signaling - Zone 3		3	UEA	UEAL2	27.55	105.96	68.28	52.82	10.37						
	2-Wire Analog Voice Grade Loop - Service Level 2 w/Loop or Ground Start Signaling - Zone 4		4	UEA	UEAL2	45.72	105.96	68.28	52.82	10.37						
	Order Coordination for Specified Conversion Time (per LSR)			UEA	OCOSL		18.19									
	2-Wire Analog Voice Grade Loop - Service Level 2 w/Reverse Battery Signaling - Zone 1		1	UEA	UEAR2	13.89	105.96	68.28	52.82	10.37						
	2-Wire Analog Voice Grade Loop - Service Level 2 w/Reverse Battery Signaling - Zone 2		2	UEA	UEAR2	18.75	105.96	68.28	52.82	10.37						
	2-Wire Analog Voice Grade Loop - Service Level 2 w/Reverse Battery Signaling - Zone 3		3	UEA	UEAR2	27.55	105.96	68.28	52.82	10.37						
	2-Wire Analog Voice Grade Loop - Service Level 2 w/Reverse Battery Signaling - Zone 4		4	UEA	UEAR2	45.72	105.96	68.28	52.82	10.37						
	Order Coordination for Specified Conversion Time (per LSR)			UEA	OCOSL		18.19									

CATEGORY	RATE ELEMENTS	Interim	Zone	BCS	USOC	RATES ($)					Svc Order Submitted Elec per LSR	Svc Order Submitted Manually per LSR	Attachment: 2 Incremental Charge - Manual Svc Order vs. Electronic-1st	Attachment: 2 Incremental Charge - Manual Svc Order vs. Electronic-Add'l	Exhibit: A Incremental Charge - Manual Svc Order vs. Electronic-Disc 1st	Exhibit: A Incremental Charge - Manual Svc Order vs. Electronic-Disc Add'l
						Rec	Nonrecurring		Nonrecurring Disconnect		OSS Rates ($)					
							First	Add'l	First	Add'l	SOMEC	SOMAN	SOMAN	SOMAN	SOMAN	SOMAN
	CLEC to CLEC Conversion Charge without outside dispatch			UEA	UREWO		87.56	36.29								
	Loop Tagging - Service Level 2 (SL2)			UEA	URETL		11.19	1.10								
4-WIRE ANALOG VOICE GRADE LOOP																
	4-Wire Analog Voice Grade Loop - Zone 1		1	UEA	UEAL4	27.47	132.27	94.59	60.68	14.64						
	4-Wire Analog Voice Grade Loop - Zone 2		2	UEA	UEAL4	38.26	132.27	94.59	60.68	14.64						
	4-Wire Analog Voice Grade Loop - Zone 3		3	UEA	UEAL4	50.03	132.27	94.59	60.68	14.64						
	4-Wire Analog Voice Grade Loop - Zone 4		4	UEA	UEAL4	50.03	132.27	94.59	60.68	14.64						
	Order Coordination for Specified Conversion Time (per LSR)			UEA	OCOSL		18.19									
	CLEC to CLEC Conversion Charge without outside dispatch			UEA	UREWO		87.56	36.29								
2-WIRE ISDN DIGITAL GRADE LOOP																
	2-Wire ISDN Digital Grade Loop - Zone 1		1	UDN	U1L2X	21.01	117.61	79.92	52.82	10.37						
	2-Wire ISDN Digital Grade Loop - Zone 2		2	UDN	U1L2X	27.59	117.61	79.92	52.82	10.37						
	2-Wire ISDN Digital Grade Loop - Zone 3		3	UDN	U1L2X	37.34	117.61	79.92	52.82	10.37						
	2-Wire ISDN Digital Grade Loop - Zone 4		4	UDN	U1L2X	59.18	117.61	79.92	52.82	10.37						
	Order Coordination For Specified Conversion Time (per LSR)			UDN	OCOSL		18.19									
	CLEC to CLEC Conversion Charge without outside dispatch			UDN	UREWO		91.46	44.07								
2-WIRE ASYMMETRICAL DIGITAL SUBSCRIBER LINE (ADSL) COMPATIBLE LOOP																
	2 Wire Unbundled ADSL Loop including manual service inquiry & facility reservation - Zone 1		1	UAL	UAL2X	11.11	121.27	70.81	50.38	7.93						
	2 Wire Unbundled ADSL Loop including manual service inquiry & facility reservation - Zone 2		2	UAL	UAL2X	11.47	121.27	70.81	50.38	7.93						
	2 Wire Unbundled ADSL Loop including manual service inquiry & facility reservation - Zone 3		3	UAL	UAL2X	11.74	121.27	70.81	50.38	7.93						
	2 Wire Unbundled ADSL Loop including manual service inquiry & facility reservation - Zone 4		4	UAL	UAL2X	12.69	121.27	70.81	50.38	7.93						
	Order Coordination for Specified Conversion Time (per LSR)			UAL	OCOSL		18.19									
	2 Wire Unbundled ADSL Loop without manual service inquiry & facility reservaton - Zone 1		1	UAL	UAL2W	11.11	96.15	58.03	50.38	7.93						
	2 Wire Unbundled ADSL Loop without manual service inquiry & facility reservaton - Zone 2		2	UAL	UAL2W	11.47	96.15	58.03	50.38	7.93						
	2 Wire Unbundled ADSL Loop without manual service inquiry & facility reservaton - Zone 3		3	UAL	UAL2W	11.74	96.15	58.03	50.38	7.93						
	2 Wire Unbundled ADSL Loop without manual service inquiry & facility reservaton - Zone 4		4	UAL	UAL2W	12.69	96.15	58.03	50.38	7.93						
	Order Coordination for Specified Conversion Time (per LSR)			UAL	OCOSL		18.19									
	CLEC to CLEC Conversion Charge without outside dispatch			UAL	UREWO		86.04	40.33								
2-WIRE HIGH BIT RATE DIGITAL SUBSCRIBER LINE (HDSL) COMPATIBLE LOOP																
	2 Wire Unbundled HDSL Loop including manual service inquiry & facility reservation - Zone 1		1	UHL	UHL2X	8.75	129.98	79.52	50.38	7.93						
	2 Wire Unbundled HDSL Loop including manual service inquiry & facility reservation - Zone 2		2	UHL	UHL2X	9.22	129.98	79.52	50.38	7.93						
	2 Wire Unbundled HDSL Loop including manual service inquiry & facility reservation - Zone 3		3	UHL	UHL2X	9.87	129.98	79.52	50.38	7.93						
	2 Wire Unbundled HDSL Loop including manual service inquiry & facility reservation - Zone 4		4	UHL	UHL2X	10.46	129.98	79.52	50.38	7.93						
	Order Coordination for Specified Conversion Time (per LSR)			UHL	OCOSL		18.19									
	2 Wire Unbundled HDSL Loop without manual service inquiry and facility reservation - Zone 1		1	UHL	UHL2W	8.75	104.86	66.74	50.38	7.93						
	2 Wire Unbundled HDSL Loop without manual service inquiry and facility reservation - Zone 2		2	UHL	UHL2W	9.22	104.86	66.74	50.38	7.93						
	2 Wire Unbundled HDSL Loop without manual service inquiry and facility reservation - Zone 3		3	UHL	UHL2W	9.87	104.86	66.74	50.38	7.93						
	2 Wire Unbundled HDSL Loop without manual service inquiry and facility reservation - Zone 4		4	UHL	UHL2W	10.46	104.86	66.74	50.38	7.93						
	Order Coordination for Specified Conversion Time (per LSR)			UHL	OCOSL		18.19									
	CLEC to CLEC Conversion Charge without outside dispatch			UHL	UREWO		85.98	40.33								
4-WIRE HIGH BIT RATE DIGITAL SUBSCRIBER LINE (HDSL) COMPATIBLE LOOP																
	4 Wire Unbundled HDSL Loop including manual service inquiry and facility reservation - Zone 1		1	UHL	UHL4X	13.78	158.74	108.28	56.72	10.68						

CATEGORY	RATE ELEMENTS	Interim	Zone	BCS	USOC	RATES ($)					Svc Order Submitted Elec per LSR	Svc Order Submitted Manually per LSR	Attachment: 2 Incremental Charge - Manual Svc Order vs. Electronic-1st	Attachment: 2 Incremental Charge - Manual Svc Order vs. Electronic-Add'l	Exhibit: A Incremental Charge - Manual Svc Order vs. Electronic-Disc 1st	Exhibit: A Incremental Charge - Manual Svc Order vs. Electronic-Disc Add'l
						Rec	Nonrecurring		Nonrecurring Disconnect		OSS Rates ($)					
							First	Add'l	First	Add'l	SOMEC	SOMAN	SOMAN	SOMAN	SOMAN	SOMAN
	4-Wire Unbundled HDSL Loop including manual service inquiry and facility reservation - Zone 2		2	UHL	UHL4X	13.43	158.74	108.28	56.72	10.68						
	4-Wire Unbundled HDSL Loop including manual service inquiry and facility reservation - Zone 3		3	UHL	UHL4X	15.59	158.74	108.28	56.72	10.68						
	4-Wire Unbundled HDSL Loop including manual service inquiry and facility reservation - Zone 4		4	UHL	UHL4X	14.46	158.74	108.28	56.72	10.68						
	Order Coordination for Specified Conversion Time (per LSR)			UHL	OCOSL		18.19									
	4-Wire Unbundled HDSL Loop without manual service inquiry and facility reservation - Zone 1		1	UHL	UHL4W	13.78	133.62	95.50	56.72	10.68						
	4-Wire Unbundled HDSL Loop without manual service inquiry and facility reservation - Zone 2		2	UHL	UHL4W	13.43	133.62	95.50	56.72	10.68						
	4-Wire Unbundled HDSL Loop without manual service inquiry and facility reservation - Zone 3		3	UHL	UHL4W	15.59	133.62	95.50	56.72	10.68						
	4-Wire Unbundled HDSL Loop without manual service inquiry and facility reservation - Zone 4		4	UHL	UHL4W	14.46	133.62	95.50	56.72	10.68						
	Order Coordination for Specified Conversion Time (per LSR)			UHL	OCOSL		18.19									
	CLEC to CLEC Conversion Charge without outside dispatch			UHL	UREWO		85.98	40.33								
4-WIRE DS1 DIGITAL LOOP																
	4-Wire DS1 Digital Loop - Zone 1		1	USL	USLXX	79.08	253.93	158.45	46.10	12.07						
	4-Wire DS1 Digital Loop - Zone 2		2	USL	USLXX	129.38	253.93	158.45	46.10	12.07						
	4-Wire DS1 Digital Loop - Zone 3		3	USL	USLXX	206.74	253.93	158.45	46.10	12.07						
	4-Wire DS1 Digital Loop - Zone 4		4	USL	USLXX	458.46	253.93	158.45	46.10	12.07						
	Order Coordination for Specified Conversion Time (per LSR)			USL	OCOSL		18.19									
	CLEC to CLEC Conversion Charge without outside dispatch			USL	UREWO		100.90	42.96								
4-WIRE 19.2, 56 OR 64 KBPS DIGITAL GRADE LOOP																
	4 Wire Unbundled Digital 19.2 Kbps		1	UDL	UDL19	27.44	126.53	88.85	60.68	14.64						
	4 Wire Unbundled Digital 19.2 Kbps		2	UDL	UDL19	34.55	126.53	88.85	60.68	14.64						
	4 Wire Unbundled Digital 19.2 Kbps		3	UDL	UDL19	40.76	126.53	88.85	60.68	14.64						
	4 Wire Unbundled Digital 19.2 Kbps		4	UDL	UDL19	32.25	126.53	88.85	60.68	14.64						
	4 Wire Unbundled Digital Loop 56 Kbps - Zone 1		1	UDL	UDL56	27.44	126.53	88.85	60.68	14.64						
	4 Wire Unbundled Digital Loop 56 Kbps - Zone 2		2	UDL	UDL56	34.55	126.53	88.85	60.68	14.64						
	4 Wire Unbundled Digital Loop 56 Kbps - Zone 3		3	UDL	UDL56	40.76	126.53	88.85	60.68	14.64						
	4 Wire Unbundled Digital Loop 56 Kbps - Zone 4		4	UDL	UDL56	32.25	126.53	88.85	60.68	14.64						
	Order Coordination for Specified Conversion Time (per LSR)			UDL	OCOSL		18.19									
	4 Wire Unbundled Digital Loop 64 Kbps - Zone 1		1	UDL	UDL64	27.44	126.53	88.85	60.68	14.64						
	4 Wire Unbundled Digital Loop 64 Kbps - Zone 2		2	UDL	UDL64	34.55	126.53	88.85	60.68	14.64						
	4 Wire Unbundled Digital Loop 64 Kbps - Zone 3		3	UDL	UDL64	40.76	126.53	88.85	60.68	14.64						
	4 Wire Unbundled Digital Loop 64 Kbps - Zone 4		4	UDL	UDL64	32.25	126.53	88.85	60.68	14.64						
	Order Coordination for Specified Conversion Time (per LSR)			UDL	OCOSL		18.19									
	CLEC to CLEC Conversion Charge without outside dispatch			UDL	UREWO		101.94	49.66								
2-WIRE Unbundled COPPER LOOP																
	2-Wire Unbundled Copper Loop-Designed including manual service inquiry & facility reservation - Zone 1		1	UCL	UCLPB	11.11	120.34	69.87	50.38	7.93						
	2-Wire Unbundled Copper Loop-Designed including manual service inquiry & facility reservation - Zone 2		2	UCL	UCLPB	11.47	120.34	69.87	50.38	7.93						
	2 Wire Unbundled Copper Loop-Designed including manual service inquiry & facility reservation - Zone 3		3	UCL	UCLPB	11.74	120.34	69.87	50.38	7.93						
	2 Wire Unbundled Copper Loop-Designed including manual service inquiry & facility reservation - Zone 4		4	UCL	UCLPB	12.69	120.34	69.87	50.38	7.93						
	Order Coordination for Unbundled Copper Loops (per loop)			UCL	UCLMC		8.20	8.20								
	2-Wire Unbundled Copper Loop-Designed without manual service inquiry and facility reservation - Zone 1		1	UCL	UCLPW	11.11	95.21	57.09	50.38	7.93						
	2-Wire Unbundled Copper Loop-Designed without manual service inquiry and facility reservation - Zone 2		2	UCL	UCLPW	11.47	95.21	57.09	50.38	7.93						
	2-Wire Unbundled Copper Loop-Designed without manual service inquiry and facility reservation - Zone 3		3	UCL	UCLPW	11.74	95.21	57.09	50.38	7.93						
	2-Wire Unbundled Copper Loop-Designed without manual service inquiry and facility reservation - Zone 4		4	UCL	UCLPW	12.69	95.21	57.09	50.38	7.93						
	Order Coordination for Unbundled Copper Loops (per loop)			UCL	UCLMC		8.20	8.20								

UNBUNDLED NETWORK ELEMENTS - Mississippi														Attachment: 2		Exhibit: A	
CATEGORY		RATE ELEMENTS	Interim	Zone	BCS	USOC	RATES ($)					Svc Order Submitted Elec per LSR	Svc Order Submitted Manually per LSR	Incremental Charge - Manual Svc Order vs. Electronic-1st	Incremental Charge - Manual Svc Order vs. Electronic-Add'l	Incremental Charge - Manual Svc Order vs. Electronic-Disc 1st	Incremental Charge - Manual Svc Order vs. Electronic-Disc Add'l
							Rec	Nonrecurring		Nonrecurring Disconnect		OSS Rates ($)					
								First	Add'l	First	Add'l	SOMEC	SOMAN	SOMAN	SOMAN	SOMAN	SOMAN
		CLEC to CLEC Conversion Charge without outside dispatch (UCL-Des)			UCL	UREWO		95.21	42.40								
	4-WIRE COPPER LOOP																
		4-Wire Copper Loop-Designed including manual service inquiry and facility reservation - Zone 1		1	UCL	UCL4S	17.30	144.68	94.22	56.72	10.68						
		4-Wire Copper Loop-Designed including manual service inquiry and facility reservation - Zone 2		2	UCL	UCL4S	18.84	144.68	94.22	56.72	10.68						
		4-Wire Copper Loop-Designed including manual service inquiry and facility reservation - Zone 3		3	UCL	UCL4S	21.33	144.68	94.22	56.72	10.68						
		4-Wire Copper Loop-Designed including manual service inquiry and facility reservation - Zone 4		4	UCL	UCL4S	21.33	144.68	94.22	56.72	10.68						
		Order Coordination for Unbundled Copper Loops (per loop)			UCL	UCLMC		8.20	8.20								
		4-Wire Copper Loop-Designed without manual service inquiry and facility reservation - Zone 1		1	UCL	UCL4W	17.30	119.56	81.44	56.72	10.68						
		4-Wire Copper Loop-Designed without manual service inquiry and facility reservation - Zone 2		2	UCL	UCL4W	18.84	119.56	81.44	56.72	10.68						
		4-Wire Copper Loop-Designed without manual service inquiry and facility reservation - Zone 3		3	UCL	UCL4W	21.33	119.56	81.44	56.72	10.68						
		4-Wire Copper Loop-Designed without manual service inquiry and facility reservation - Zone 4		4	UCL	UCL4W	21.33	119.56	81.44	56.72	10.68						
		Order Coordination for Unbundled Copper Loops (per loop)			UCL	UCLMC		8.20	8.20								
		CLEC to CLEC Conversion Charge without outside dispatch (UCL-Des)			UCL	UREWO		95.21	42.40								
LOOP MODIFICATION																	
		Unbundled Loop Modification, Removal of Load Coils - 2 Wire pair less than or equal to 18k ft, per Unbundled Loop			UAL, UHL, UCL, UEQ, ULS, UEA, UEANL, UEPSR, UEPSB	ULM2L		32.57	32.57								
		Unbundled Loop Modification Removal of Load Coils - 4 Wire less than or equal to 18K ft, per Unbundled Loop			UHL, UCL, UEA	ULM4L		32.57	32.57								
		Unbundled Loop Modification Removal of Bridged Tap Removal, per unbundled loop			UAL, UHL, UCL, UEQ, ULS, UEA, UEANL, UEPSR, UEPSB	ULMBT		32.59	32.59								
SUB-LOOPS																	
	Sub-Loop Distribution																
		Sub-Loop - Per Cross Box Location - CLEC Feeder Facility Set-Up	I		UEANL	USBSA		259.69									
		Sub-Loop - Per Cross Box Location - Per 25 Pair Panel Set-Up	I		UEANL	USBSB		22.77									
		Sub-Loop - Per Building Equipment Room - CLEC Feeder Facility Set-Up	I		UEANL	USBSC		178.47									
		Sub-Loop - Per Building Equipment Room - Per 25 Pair Panel Set-Up	I		UEANL	USBSD		56.39									
		Sub-Loop Distribution Per 2-Wire Analog Voice Grade Loop - Zone 1	I	1	UEANL	USBN2	7.15	66.18	31.14	45.36	6.71						
		Sub-Loop Distribution Per 2-Wire Analog Voice Grade Loop - Zone 2	I	2	UEANL	USBN2	9.51	66.18	31.14	45.36	6.71						
		Sub-Loop Distribution Per 2-Wire Analog Voice Grade Loop - Zone 3	I	3	UEANL	USBN2	12.45	66.18	31.14	45.36	6.71						
		Sub-Loop Distribution Per 2-Wire Analog Voice Grade Loop - Zone 4		4	UEANL	USBN2	18.26	66.18	31.14	45.36	6.71						
		Order Coordination for Unbundled Sub-Loops, per sub-loop pair			UEANL	USBMC		8.20	8.20								
		Sub-Loop Distribution Per 4-Wire Analog Voice Grade Loop - Zone 1		1	UEANL	USBN4	7.30	79.49	44.45	51.27	9.35						
		Sub-Loop Distribution Per 4-Wire Analog Voice Grade Loop - Zone 2		2	UEANL	USBN4	13.92	79.49	44.45	51.27	9.35						

UNBUNDLED NETWORK ELEMENTS - Mississippi														Attachment: 2		Exhibit: A	
CATEGORY		RATE ELEMENTS	Interim	Zone	BCS	USOC	RATES ($)					Svc Order Submitted Elec per LSR	Svc Order Submitted Manually per LSR	Incremental Charge - Manual Svc Order vs. Electronic-1st	Incremental Charge - Manual Svc Order vs. Electronic-Add'l	Incremental Charge - Manual Svc Order vs. Electronic-Disc 1st	Incremental Charge - Manual Svc Order vs. Electronic-Disc Add'l
							Rec	Nonrecurring		Nonrecurring Disconnect		OSS Rates ($)					
								First	Add'l	First	Add'l	SOMEC	SOMAN	SOMAN	SOMAN	SOMAN	SOMAN
		Sub-Loop Distribution Per 4-Wire Analog Voice Grade Loop - Zone 3		3	UEANL	USBN4	16.73	79.49	44.45	51.27	9.35						
		Sub-Loop Distribution Per 4-Wire Analog Voice Grade Loop - Zone 4		4	UEANL	USBN4	16.73	79.49	44.45	51.27	9.35						
		Order Coordination for Unbundled Sub-Loops, per sub-loop pair			UEANL	USBMC		8.20	8.20								
		Sub-Loop 2-Wire Intrabuilding Network Cable (INC)	I		UEANL	USBR2	2.29	53.32	18.28	45.36	6.71						
		Order Coordination for Unbundled Sub-Loops, per sub-loop pair			UEANL	USBMC		8.20	8.20								
		Sub-Loop 4-Wire Intrabuilding Network Cable (INC)	I		UEANL	USBR4	4.40	59.60	24.55	51.27	9.35						
		Order Coordination for Unbundled Sub-Loops, per sub-loop pair			UEANL	USBMC		8.20	8.20								
		Loop Testing - Basic 1st Half Hour			UEANL	URET1		34.36	34.36								
		Loop Testing - Basic Additional Half Hour			UEANL	URETA		19.97	19.97								
		2 Wire Copper Unbundled Sub-Loop Distribution - Zone 1	I	1	UEF	UCS2X	6.06	66.18	31.14	45.36	6.71						
		2 Wire Copper Unbundled Sub-Loop Distribution - Zone 2	I	2	UEF	UCS2X	7.09	66.18	31.14	45.36	6.71						
		2 Wire Copper Unbundled Sub-Loop Distribution - Zone 3	I	3	UEF	UCS2X	8.16	66.18	31.14	45.36	6.71						
		2 Wire Copper Unbundled Sub-Loop Distribution - Zone 4		4	UEF	UCS2X	9.90	66.18	31.14	45.36	6.71						
		Order Coordination for Unbundled Sub-Loops, per sub-loop pair			UEF	USBMC		8.20	8.20								
		4 Wire Copper Unbundled Sub-Loop Distribution - Zone 1	I	1	UEF	UCS4X	5.10	79.49	44.45	51.27	9.35						
		4 Wire Copper Unbundled Sub-Loop Distribution - Zone 2	I	2	UEF	UCS4X	9.11	79.49	44.45	51.27	9.35						
		4 Wire Copper Unbundled Sub-Loop Distribution - Zone 3	I	3	UEF	UCS4X	14.00	79.49	44.45	51.27	9.35						
		4 Wire Copper Unbundled Sub-Loop Distribution - Zone 4		4	UEF	UCS4X	14.00	79.49	44.45	51.27	9.35						
		Order Coordination for Unbundled Sub-Loops, per sub-loop pair			UEF	USBMC		8.20	8.20								
		Loop Testing - Basic 1st Half Hour			UEF	URET1		34.36	34.36								
		Loop Testing - Basic Additional Half Hour			UEF	URETA		19.97	19.97								
	Unbundled Network Terminating Wire (UNTW)																
		Unbundled Network Terminating Wire (UNTW) per Pair			UENTW	UENPP	0.3366	30.55									
	Network Interface Device (NID)																
		Network Interface Device (NID) - 1-2 lines			UENTW	UND12		43.84	28.90								
		Network Interface Device (NID) - 1-6 lines			UENTW	UND16		65.30	50.36								
		Network Interface Device Cross Connect - 2 W			UENTW	UNDC2		5.94	5.94								
		Network Interface Device Cross Connect - 4W			UENTW	UNDC4		5.94	5.94								
UNE OTHER, PROVISIONING ONLY - NO RATE																	
		NID - Dispatch and Service Order for NID installation			UENTW	UNDBX	0.00	0.00									
		UNTW Circuit Id Establishment, Provisioning Only - No Rate			UENTW	UENCE	0.00	0.00									
		Unbundled Contract Name, Provisioning Only - No Rate			UEANL,UEF,UEQ,UENTW	UNECN	0.00	0.00									
UNE OTHER, PROVISIONING ONLY - NO RATE																	
		Unbundled Contact Name, Provisioning Only - no rate			UAL,UCL,UDC,UDL,UDN,UEA,UHL,ULC	UNECN	0.00	0.00									
		Unbundled Sub-Loop Feeder-2 Wire Cross Box Jumper - no rate			UEA,UDN,UCL,UDC	USBFQ	0.00	0.00									
		Unbundled Sub-Loop Feeder-4 Wire Cross Box Jumper - no rate			UEA,USL,UCL,UDL	USBFR	0.00	0.00									
		Unbundled DS1 Loop - Superframe Format Option - no rate			USL	CCOSF	0.00	0.00									
		Unbundled DS1 Loop - Expanded Superframe Format option - no rate			USL	CCOEF	0.00	0.00									
HIGH CAPACITY UNBUNDLED LOCAL LOOP																	
		High Capacity Unbundled Local Loop - DS3 - Per Mile per month			UE3	1L5ND	11.20										
		High Capacity Unbundled Local Loop - DS3 - Facility Termination per month			UE3	UE3PX	326.15	454.13	265.47	123.23	86.19						
		High Capacity Unbundled Local Loop - STS-1 - Per Mile per month			UDLSX	1L5ND	11.20										

UNBUNDLED NETWORK ELEMENTS - Mississippi														Attachment: 2		Exhibit: A	
CATEGORY		RATE ELEMENTS	Interim	Zone	BCS	USOC	RATES ($)					Svc Order Submitted Elec per LSR	Svc Order Submitted Manually per LSR	Incremental Charge - Manual Svc Order vs. Electronic-1st	Incremental Charge - Manual Svc Order vs. Electronic-Add'l	Incremental Charge - Manual Svc Order vs. Electronic-Disc 1st	Incremental Charge - Manual Svc Order vs. Electronic-Disc Add'l
							Rec	Nonrecurring		Nonrecurring Disconnect		OSS Rates ($)					
								First	Add'l	First	Add'l	SOMEC	SOMAN	SOMAN	SOMAN	SOMAN	SOMAN
		High Capacity Unbundled Local Loop - STS-1 - Facility Termination per month			UDLSX	UDLS1	338.55	454.13	265.47	123.23	86.19						
LOOP MAKE-UP																	
		Loop Makeup - Preordering Without Reservation, per working or spare facility queried (Manual).			UMK	UMKLW		24.12	24.12								
		Loop Makeup - Preordering With Reservation, per spare facility queried (Manual).			UMK	UMKLP		25.58	25.58								
		Loop Makeup--With or Without Reservation, per working or spare facility queried (Mechanized)			UMK	UMKMQ		0.6652	0.6652								
LINE SHARING AND LINE SPLITTING																	
	NOTE 1: The Line Sharing monthly recurring rates for all installations completed from October 02, 2003 through midnight October 01, 2004 shall be billed as follows:																
	NOTE 1: 10/02/2003 – 10/01/2004: 25% of the rate for an unbundled copper loop non-designed ("UCLND")																
	NOTE 1: 10/02/2004 – 10/01/2005: 50% of the rate for UCLND																
	NOTE 1: 10/02/2005 – 10/01/2006: 75% of the rate for UCLND																
	NOTE 1: Above will apply to USOCS: ULSDT and ULSCT																
	****NOTE 2: The Line Sharing monthly recurring rates with USOCs ULSDC and ULSCC applies only to circuits installed and inservice on or before October 1, 2003**																
	LINE SHARING																
	SPLITTERS-CENTRAL OFFICE BASED																
		Line Sharing Splitter, per System 96 Line Capacity			ULS	ULSDA	186.67	189.89	0.00	178.41	0.00						
		Line Sharing Splitter, per System 24 Line Capacity			ULS	ULSDB	46.67	189.89	0.00	178.41	0.00						
		Line Sharing Splitter, Per System, 8 Line Capacity			ULS	ULSD8	15.55	189.89	0.00	178.41	0.00						
		Line Sharing-DLEC Owned Splitter in CO-CFA activaton-deactivation (per LSOD)			ULS	ULSDG		86.98	0.00	49.96	0.00						
	END USER ORDERING-CENTRAL OFFICE BASED LINE SHARING																
		Line Sharing - per Line Activation (BST Owned splitter) - OBSOLETE see **NOTE 2			ULS	ULSDC	0.61	18.62	10.66	10.04	4.93						
		Line Share Service, TRO per line activation, BST owned splitter - Central Office Located (25% of UCLND) - please see NOTE 1 (E:10/2/2003)			ULS	ULSDT	2.75	18.62	10.66	10.04	4.93						
		Line Share Service, TRO per line activation, BST owned splitter - Central Office Located (50% of UCLND) - please see NOTE 1 (E:10/2/2004)			ULS	ULSDT	5.51	18.62	10.66	10.04	4.93						
		Line Share Service, TRO per line activation, BST owned splitter - Central Office Located (75% of UCLND) - please see NOTE 1 (E:10/2/2005)			ULS	ULSDT	8.26	18.62	10.66	10.04	4.93						
		Line Sharing - per Subsequent Activity per Line Rearrangement(BST Owned Splitter)			ULS	ULSDS		16.48	8.24								
		Line Sharing - per Subsequent Activity per Line Rearrangement(DLEC Owned Splitter)			ULS	ULSCS		16.48	8.24								
		Line Sharing - per Line Activation (DLEC owned Splitter) - OBSOLETE see **NOTE 2			ULS	ULSCC	0.61	47.44	19.31	20.67	12.74						
		Line Share Service, TRO per line activation, CLEC owned splitter - Central Office Located (25% of UCLND) - please see NOTE 1 (E:10/2/2003)			ULS	ULSCT	2.75	47.44	19.31	20.67	12.74						
		Line Share Service, TRO per line activation, CLEC owned splitter - Central Office Located (50% of UCLND) - please see NOTE 1 (E:10/2/2004)			ULS	ULSCT	5.51	47.44	19.31	20.67	12.74						
		Line Share Service, TRO per line activation, CLEC owned splitter - Central Office Located (75% of UCLND) - please see NOTE 1 (E:10/2/2005)			ULS	ULSCT	8.26	47.44	19.31	20.67	12.74						
	LINE SPLITTING																
	END USER ORDERING-CENTRAL OFFICE BASED																
		Line Splitting - per line activation DLEC owned splitter			UEPSR UEPSB	UREOS	0.61										
		Line Splitting - per line activation BST owned - physical			UEPSR UEPSB	UREBP	0.61	18.62	10.66	10.04	4.93						
		Line Splitting - per line activation BST owned - virtual			UEPSR UEPSB	UREBV	0.61	18.62	10.66	10.04	4.93						
	MAINTENANCE																
		No Trouble Found - per 1/2 hour increments - Basic						80.00	55.00								
		No Trouble Found - per 1/2 hour increments - Overtime						120.00	82.50								
		No Trouble Found - per 1/2 hour increments - Premium						160.00	110.00								

UNBUNDLED NETWORK ELEMENTS - Mississippi														Attachment: 2		Exhibit: A	
CATEGORY		RATE ELEMENTS	Interim	Zone	BCS	USOC	RATES ($)					Svc Order Submitted Elec per LSR	Svc Order Submitted Manually per LSR	Incremental Charge - Manual Svc Order vs. Electronic-1st	Incremental Charge - Manual Svc Order vs. Electronic-Add'l	Incremental Charge - Manual Svc Order vs. Electronic-Disc 1st	Incremental Charge - Manual Svc Order vs. Electronic-Disc Add'l
							Rec	Nonrecurring		Nonrecurring Disconnect		OSS Rates ($)					
								First	Add'l	First	Add'l	SOMEC	SOMAN	SOMAN	SOMAN	SOMAN	SOMAN
UNBUNDLED DEDICATED TRANSPORT																	
	INTEROFFICE CHANNEL - DEDICATED TRANSPORT																
		Interoffice Channel - Dedicated Transport - 2-Wire Voice Grade - Per Mile per month			U1TVX	1L5XX	0.0098										
		Interoffice Channel - Dedicated Transport- 2- Wire Voice Grade - Facility Termination			U1TVX	U1TV2	22.52	40.77	27.57	17.26	7.11						
		Interoffice Channel - Dedicated Transpor t- 2-Wire Voice Grade Rev Bat. - Per Mile per month			U1TVX	1L5XX	0.0098										
		Interoffice Channel - Dedicated Transport- 2- Wire VG Rev Bat. - Facility Termination			U1TVX	U1TR2	22.52	40.77	27.57	17.26	7.11						
		Interoffice Channel - Dedicated Transport - 4-Wire Voice Grade - Per Mile per month			U1TVX	1L5XX	0.0098										
		Interoffice Channel - Dedicated Transport - 4- Wire Voice Grade - Facility Termination			U1TVX	U1TV4	19.79	40.77	27.57	17.26	7.11						
		Interoffice Channel - Dedicated Transport - 56 kbps - per mile per month			U1TDX	1L5XX	0.0098										
		Interoffice Channel - Dedicated Transport - 56 kbps - Facility Termination			U1TDX	U1TD5	15.68	40.78	27.57	17.26	7.11						
		Interoffice Channel - Dedicated Transport - 64 kbps - per mile per month			U1TDX	1L5XX	0.0098										
		Interoffice Channel - Dedicated Transport - 64 kbps - Facility Termination			U1TDX	U1TD6	15.68	40.78	27.57	17.26	7.11						
		Interoffice Channel - Dedicated Channel - DS1 - Per Mile per month			U1TD1	1L5XX	0.201										
		Interoffice Channel - Dedicated Tranport - DS1 - Facility Termination			U1TD1	U1TF1	57.33	89.79	82.28	16.86	14.90						
		Interoffice Channel - Dedicated Transport - DS3 - Per Mile per month			U1TD3	1L5XX	4.76										
		Interoffice Channel - Dedicated Transport - DS3 - Facility Termination per month			U1TD3	U1TF3	641.90	280.37	163.70	62.08	60.29						
		Interoffice Channel - Dedicated Transport - STS-1 - Per Mile per month			U1TS1	1L5XX	4.76										
		Interoffice Channel - Dedicated Transport - STS-1 - Facility Termination			U1TS1	U1TFS	644.21	280.37	163.70	62.08	60.29						
DARK FIBER																	
		Dark Fiber, Four Fiber Strands, Per Route Mile or Fraction Thereof per month - Interoffice Channel			UDF, UDFCX	1L5DF	28.27										
		NRC Dark Fiber - Interoffice Channel			UDF, UDFCX	UDF14		642.79	138.67	326.97	203.85						
		Dark Fiber, Four Fiber Strands, Per Route Mile or Fraction Thereof per month - Local Loop			UDF, UDFCX	1L5DL	59.95										
		NRC Dark Fiber - Local Loop			UDF, UDFCX	UDFL4		642.79	138.67	326.97	203.85						
8XX ACCESS TEN DIGIT SCREENING																	
		8XX Access Ten Digit Screening, Per Call			OHD		0.0006216										
		8XX Access Ten Digit Screening, Reservation Charge Per 8XX Number Reserved			OHD	N8R1X		2.60	0.44								
		8XX Access Ten Digit Screening, Per 8XX No. Established W/O POTS Translations			OHD			5.97	0.81	4.60	0.54						
		8XX Access Ten Digit Screening, Per 8XX No. Established With POTS Translations			OHD	N8FTX		5.97	0.81	4.60	0.54						
		8XX Access Ten Digit Screening, Customized Area of Service Per 8XX Number			OHD	N8FCX		2.60	1.30								
		8XX Access Ten Digit Screening, Multiple InterLATA CXR Routing Per CXR Requested Per 8XX No.			OHD	N8FMX		3.04	1.74								
		8XX Access Ten Digit Screening, Change Charge Per Request			OHD	N8FAX		3.04	0.44								
		8XX Access Ten Digit Screening, Call Handling and Destination Features			OHD	N8FDX		2.60									
		8XX Access Ten Digit Screening, w/ 8FL No. Delivery, per query			OHD		0.0006216										

UNBUNDLED NETWORK ELEMENTS - Mississippi														Attachment: 2		Exhibit: A	
CATEGORY		RATE ELEMENTS	Interim	Zone	BCS	USOC	RATES ($)					Svc Order Submitted Elec per LSR	Svc Order Submitted Manually per LSR	Incremental Charge - Manual Svc Order vs. Electronic-1st	Incremental Charge - Manual Svc Order vs. Electronic-Add'l	Incremental Charge - Manual Svc Order vs. Electronic-Disc 1st	Incremental Charge - Manual Svc Order vs. Electronic-Disc Add'l
							Rec	Nonrecurring		Nonrecurring Disconnect		OSS Rates ($)					
								First	Add'l	First	Add'l	SOMEC	SOMAN	SOMAN	SOMAN	SOMAN	SOMAN
		8XX Access Ten Digit Screening, w/ POTS No. Delivery, per query			OHD		0.0006216										
LINE INFORMATION DATA BASE ACCESS (LIDB)																	
		LIDB Common Transport Per Query			OQT		0.0000197										
		LIDB Validation Per Query			OQU		0.0137053										
		LIDB Originating Point Code Establishment or Change			OQT, OQU	NRBPX		34.52	34.52	42.33	42.33						
SIGNALING (CCS7)																	
		CCS7 Signaling Termination, Per STP Port			UDB	PT8SX	132.21										
		CCS7 Signaling Usage, Per TCAP Message			UDB		0.0000597										
		CCS7 Signaling Connection, Per link (A link)			UDB	TPP++	16.55	35.74	35.74	16.53	16.53						
		CCS7 Signaling Connection, Per link (B link) (also known as D link)			UDB	TPP++	16.55	35.74	35.74	16.53	16.53						
		CCS7 Signaling Usage, Per ISUP Message			UDB		0.0000149										
		CCS7 Signaling Usage Surrogate, per link per LATA			UDB	STU56	683.55										
		CCS7 Signaling Point Code, per Originating Point Code Establishment or Change, per STP affected			UDB	CCAPO		29.18	29.18	35.78	35.78						
E911 SERVICE																	
		Local Channel - Dedicated - 2-wr Voice Grade					14.91	194.22	33.36	37.79	3.30						
		Interoffice Transport - Dedicated - 2-wr Voice Grade Per Mile					0.0098										
		Interoffice Transport - Dedicated - 2-wr Voice Grade Per Facility Termination					22.52	40.77	27.57	17.26	7.11						
		Local Channel - Dedicated - DS1 - Zone 1					36.83	178.50	154.61	22.89	15.74						
		Local Channel - Dedicated - DS1 - Zone 2					35.99	178.50	154.61	22.89	15.74						
		Local Channel - Dedicated - DS1 - Zone 3					221.63	178.50	154.61	22.89	15.74						
		Local Channel - Dedicated - DS1 - Zone 4					221.63	178.50	154.61	22.89	15.74						
		Interoffice Transport - Dedicated - DS1 Per Mile					0.2010										
		Interoffice Transport - Dedicated - DS1 Per Facility Termination					57.33	89.79	82.28	16.86	14.90						
CALLING NAME (CNAM) SERVICE																	
		CNAM For DB Owners - Service Establishment			OQV			23.09	23.09	21.23	21.23						
		CNAM For Non DB Owners - Service Establishment			OQV			23.09	23.09	21.23	21.23						
		CNAM For DB Owners - Service Provisioning With Point Code Establishment			OQV			996.62	737.08	270.49	198.89						
		CNAM For Non DB Owners - Service Provisioning With Point Code Establishment			OQV			344.32	246.56	276.85	198.89						
		CNAM for DB Owners, Per Query			OQV		0.0010231										
		CNAM for Non DB Owners, Per Query			OQV		0.0010231										
SELECTIVE ROUTING																	
		Selective Routing Per Unique Line Class Code Per Request Per Switch						85.19	85.19	14.19	14.19						
VIRTUAL COLLOCATION																	
		Virtual Collocation-2 Wire Cross Connects (Loop) for Line Splitting			UEPSR UEPSB	VE1LS	0.0268	12.37	11.87	6.04	5.45						
PHYSICAL COLLOCATION																	
		Physical Collocation-2 Wire Cross Connects (Loop) for Line Splitting			UEPSR UEPSB	PE1LS	0.0288	12.37	11.87	6.04	5.45						
AIN SELECTIVE CARRIER ROUTING																	
		Regional Service Establishment			SRC	SRCEC		101,685.12		8,640.51							
		End Office Establishment			SRC	SRCEO		167.49	167.49	1.71	1.71						
		Query NRC, per query			SRC		0.0030502										
AIN - BELLSOUTH AIN SMS ACCESS SERVICE																	
		AIN SMS Access Service - Service Establishment, Per State, Initial Setup			A1N	CAMSE		39.67	39.67	40.92	40.92						
		AIN SMS Access Service - Port Connection - Dial/Shared Access			A1N	CAMDP		7.87	7.87	9.14	9.14						
		AIN SMS Access Service - Port Connection - ISDN Access			A1N	CAM1P		7.87	7.87	9.14	9.14						
		AIN SMS Access Service - User Identification Codes - Per User ID Code			A1N	CAMAU		35.21	35.21	27.21	27.21						

CATEGORY	RATE ELEMENTS	Interim	Zone	BCS	USOC	RATES ($) Rec	Nonrecurring First	Nonrecurring Add'l	Nonrecurring Disconnect First	Nonrecurring Disconnect Add'l	Svc Order Submitted Elec per LSR	Svc Order Submitted Manually per LSR	Attachment: 2 Incremental Charge - Manual Svc Order vs. Electronic- 1st	Attachment: 2 Incremental Charge - Manual Svc Order vs. Electronic- Add'l	Exhibit: A Incremental Charge - Manual Svc Order vs. Electronic- Disc 1st	Exhibit: A Incremental Charge - Manual Svc Order vs. Electronic- Disc Add'l
											OSS Rates ($)					
											SOMEC	SOMAN	SOMAN	SOMAN	SOMAN	SOMAN
	AIN SMS Access Service - Security Card, Per User ID Code, Initial or Replacement			A1N	CAMRC		42.13	42.13	11.78	11.78						
	AIN SMS Access Service - Storage, Per Unit (100 Kilobytes)					0.0021										
	AIN SMS Access Service - Session, Per Minute					0.5649										
	AIN SMS Access Service - Company Performed Session, Per Minute					0.8393										
AIN - BELLSOUTH AIN TOOLKIT SERVICE																
	AIN Toolkit Service - Service Establishment Charge, Per State, Initial Setup			CAM	BAPSC		39.67	39.67	40.92	40.92						
	AIN Toolkit Service - Training Session, Per Customer				BAPVX		4,226.54	4,226.54								
	AIN Toolkit Service - Trigger Access Charge, Per Trigger, Per DN, Term. Attempt				BAPTT		7.87	7.87	9.14	9.14						
	AIN Toolkit Service - Trigger Access Charge, Per Trigger, Per DN, Off-Hook Delay				BAPTD		7.87	7.87	9.14	9.14						
	AIN Toolkit Service - Trigger Access Charge, Per Trigger, Per DN, Off-Hook Immediate				BAPTM		7.87	7.87	9.14	9.14						
	AIN Toolkit Service - Trigger Access Charge, Per Trigger, Per DN, 10-Digit PODP				BAPTO		34.67	34.67	14.44	14.44						
	AIN Toolkit Service - Trigger Access Charge, Per Trigger, Per DN, CDP				BAPTC		34.67	34.67	14.44	14.44						
	AIN Toolkit Service - Trigger Access Charge, Per Trigger, Per DN, Feature Code				BAPTF		34.67	34.67	14.44	14.44						
	AIN Toolkit Service - Query Charge, Per Query					0.0535577										
	AIN Toolkit Service - Type 1 Node Charge, Per AIN Toolkit Subscription, Per Node, Per Query					0.0063509										
	AIN Toolkit Service - SCP Storage Charge, Per SMS Access Account, Per 100 Kilobytes					0.06										
	AIN Toolkit Service - Monthly report - Per AIN Toolkit Service Subscription			CAM	BAPMS	11.11	7.87	7.87	5.54	5.54						
	AIN Toolkit Service - Special Study - Per AIN Toolkit Service Subscription			CAM	BAPLS	2.71	8.71	8.71								
	AIN Toolkit Service - Call Event Report - Per AIN Toolkit Service Subscription			CAM	BAPDS	8.48	7.87	7.87	5.54	5.54						
	AIN Toolkit Service - Call Event Special Study - Per AIN Toolkit Service Subscription			CAM	BAPES	0.09	8.71	8.71								
ENHANCED EXTENDED LINK (EELs)																
	NOTE: The monthly recurring and non-recurring charges below will apply and the Switch-As-Is Charge will not apply for UNE combinations provisioned as ' Ordinarily Combined' Network Elements.															
	NOTE: The monthly recurring and the Switch-As-Is Charge and not the non-recurring charges below will apply for UNE combinations provisioned as ' Currently Combined' Network Elements.															
	EXTENTED 2-WIRE VOICE GRADE EXTENDED LOOP WITH DEDICATED DS1 INTEROFFICE TRANSPORT															
	First 2-Wire VG Loop (SL2) in Combination - Zone 1		1	UNCVX	UEAL2	13.89	105.96	68.28	52.82	10.37						
	First 2-Wire VG Loop (SL2) in Combination - Zone 2		2	UNCVX	UEAL2	18.75	105.96	68.28	52.82	10.37						
	First 2-Wire VG Loop (SL2) in Combination - Zone 3		3	UNCVX	UEAL2	27.55	105.96	68.28	52.82	10.37						
	First 2-Wire VG Loop (SL2) in Combination - Zone 4		4	UNCVX	UEAL2	45.72	105.96	68.28	52.82	10.37						
	Interoffice Transport - Dedicated - DS1 combination - Per Mile per month			UNC1X	1L5XX	0.1813										
	Interoffice Transport - Dedicated - DS1 combination - Facility Termination per month			UNC1X	U1TF1	51.72	89.79	82.28	16.86	14.90						
	1/0 Channelization System in combination Per Month			UNC1X	MQ1	102.85	91.57	62.94	10.87	10.10						
	Voice Grade COCI - Per Month			UNCVX	1D1VG	0.5737	6.62	4.74								
	Each Additional 2-Wire VG Loop (SL 2) in Combination - Zone 1		1	UNCVX	UEAL2	13.89	105.96	68.28	52.82	10.37						
	Each Additional 2-Wire VG Loop (SL 2) in Combination - Zone 2		2	UNCVX	UEAL2	18.75	105.96	68.28	52.82	10.37						
	Each Additional 2-Wire VG Loop (SL 2) in Combination - Zone 3		3	UNCVX	UEAL2	27.55	105.96	68.28	52.82	10.37						
	Each Additional 2-Wire VG Loop (SL 2) in Combination - Zone 4		4	UNCVX	UEAL2	45.72	105.96	68.28	52.82	10.37						
	Voice Grade COCI - Per Month			UNCVX	1D1VG	0.5737	6.62	4.74								

UNBUNDLED NETWORK ELEMENTS - Mississippi														Attachment: 2		Exhibit: A	
CATEGORY		RATE ELEMENTS	Interim	Zone	BCS	USOC	RATES ($)					Svc Order Submitted Elec per LSR	Svc Order Submitted Manually per LSR	Incremental Charge - Manual Svc Order vs. Electronic-1st	Incremental Charge - Manual Svc Order vs. Electronic-Add'l	Incremental Charge - Manual Svc Order vs. Electronic-Disc 1st	Incremental Charge - Manual Svc Order vs. Electronic-Disc Add'l
							Rec	Nonrecurring		Nonrecurring Disconnect		OSS Rates ($)					
								First	Add'l	First	Add'l	SOMEC	SOMAN	SOMAN	SOMAN	SOMAN	SOMAN
		Nonrecurring Currently Combined Network Elements Switch -As-Is Charge			UNC1X	UNCCC		5.63	5.63	7.20	7.20						
	EXTENDED 4-WIRE VOICE GRADE EXTENDED LOOP WITH DEDICATED DS1 INTEROFFICE TRANSPORT																
		First 4-Wire Analog Voice Grade Loop in Combination - Zone 1		1	UNCVX	UEAL4	27.47	132.27	94.59	60.68	14.64						
		First 4-Wire Analog Voice Grade Loop in Combination - Zone 2		2	UNCVX	UEAL4	38.26	132.27	94.59	60.68	14.64						
		First 4-Wire Analog Voice Grade Loop in Combination - Zone 3		3	UNCVX	UEAL4	50.03	132.27	94.59	60.68	14.64						
		First 4-Wire Analog Voice Grade Loop in Combination - Zone 4		4	UNCVX	UEAL4	50.03	132.27	94.59	60.68	14.64						
		Interoffice Transport - Dedicated - DS1 combination - Per Mile Per Month			UNC1X	1L5XX	0.1813										
		Interoffice Transport - Dedicated - DS1 - Facility Termination Per Month			UNC1X	U1TF1	51.72	89.79	82.28	16.86	14.90						
		1/0 Channel System in combination Per Month			UNC1X	MQ1	102.85	91.57	62.94	10.87	10.10						
		Voice Grade COCI in combination - per month			UNCVX	1D1VG	0.5737	6.62	4.74								
		Additional 4-Wire Analog Voice Grade Loop in same DS1 Interoffice Transport Combination - Zone 1		1	UNCVX	UEAL4	27.47	132.27	94.59	60.68	14.64						
		Additional 4-Wire Analog Voice Grade Loop in same DS1 Interoffice Transport Combination - Zone 2		2	UNCVX	UEAL4	38.26	132.27	94.59	60.68	14.64						
		Additional 4-Wire Analog Voice Grade Loop in same DS1 Interoffice Transport Combination - Zone 3		3	UNCVX	UEAL4	50.03	132.27	94.59	60.68	14.64						
		Additional 4-Wire Analog Voice Grade Loop in same DS1 Interoffice Transport Combination - Zone 4		4	UNCVX	UEAL4	50.03	132.27	94.59	60.68	14.64						
		Additional Voice Grade COCI in combination - per month			UNCVX	1D1VG	0.5737	6.62	4.74								
		Nonrecurring Currently Combined Network Elements Switch -As-Is Charge			UNC1X	UNCCC		5.63	5.63	7.20	7.20						
	EXTENDED 4-WIRE 56 KBPS EXTENDED DIGITAL LOOP WITH DEDICATED DS1 INTEROFFICE TRANSPORT																
		First 4-Wire 56Kbps Digital Grade Loop in Combination - Zone 1		1	UNCDX	UDL56	27.44	126.53	88.85	60.68	14.64						
		First 4-Wire 56Kbps Digital Grade Loop in Combination - Zone 2		2	UNCDX	UDL56	34.55	126.53	88.85	60.68	14.64						
		First 4-Wire 56Kbps Digital Grade Loop in Combination - Zone 3		3	UNCDX	UDL56	40.76	126.53	88.85	60.68	14.64						
		First 4-Wire 56Kbps Digital Grade Loop in Combination - Zone 4		4	UNCDX	UDL56	32.25	126.53	88.85	60.68	14.64						
		Interoffice Transport - Dedicated - DS1 combination - Per Mile Per Month			UNC1X	1L5XX	0.1813										
		Interoffice Transport - Dedicated - DS1 - combination Facility Termination Per Month			UNC1X	U1TF1	51.72	89.79	82.28	16.86	14.90						
		1/0 Channel System in combination Per Month			UNC1X	MQ1	102.85	91.57	62.94	10.87	10.10						
		OCU-DP COCI (data) per month (2.4-64kbs)			UNCDX	1D1DD	1.22	6.62	4.74	0.00	0.00						
		Additional 4-Wire 56Kbps Digital Grade Loop in same DS1 Interoffice Transport Combination - Zone 1		1	UNCDX	UDL56	27.44	126.53	88.85	60.68	14.64						
		Additional 4-Wire 56Kbps Digital Grade Loop in same DS1 Interoffice Transport Combination - Zone 2		2	UNCDX	UDL56	34.55	126.53	88.85	60.68	14.64						
		Additional 4-Wire 56Kbps Digital Grade Loop in same DS1 Interoffice Transport Combination - Zone 3		3	UNCDX	UDL56	40.76	126.53	88.85	60.68	14.64						
		Additional 4-Wire 56Kbps Digital Grade Loop in same DS1 Interoffice Transport Combination - Zone 4		4	UNCDX	UDL56	32.25	126.53	88.85	60.68	14.64						
		Additional OCU-DP COCI (data) - in combination per month (2.4-64kbs)			UNCDX	1D1DD	1.22	6.62	4.74	0.00	0.00						
		Nonrecurring Currently Combined Network Elements Switch -As-Is Charge			UNC1X	UNCCC		5.63	5.63	7.20	7.20						
	EXTENDED 4-WIRE 64 KBPS EXTENDED DIGITAL LOOP WITH DEDICATED DS1 INTEROFFICE TRANSPORT																
		First 4-Wire 64Kbps Digital Grade Loop in Combination - Zone 1		1	UNCDX	UDL64	27.44	126.53	88.85	60.68	14.64						

CATEGORY	RATE ELEMENTS	Interim	Zone	BCS	USOC	RATES ($)					Svc Order Submitted Elec per LSR	Svc Order Submitted Manually per LSR	Attachment: 2 Incremental Charge - Manual Svc Order vs. Electronic-1st	Attachment: 2 Incremental Charge - Manual Svc Order vs. Electronic-Add'l	Exhibit: A Incremental Charge - Manual Svc Order vs. Electronic-Disc 1st	Exhibit: A Incremental Charge - Manual Svc Order vs. Electronic-Disc Add'l
						Rec	Nonrecurring		Nonrecurring Disconnect		OSS Rates ($)					
							First	Add'l	First	Add'l	SOMEC	SOMAN	SOMAN	SOMAN	SOMAN	SOMAN
	First 4-Wire 64Kbps Digital Grade Loop in Combination - Zone 2		2	UNCDX	UDL64	34.55	126.53	88.85	60.68	14.64						
	First 4-Wire 64Kbps Digital Grade Loop in Combination - Zone 3		3	UNCDX	UDL64	40.76	126.53	88.85	60.68	14.64						
	First 4-Wire 64Kbps Digital Grade Loop in Combination - Zone 4		4	UNCDX	UDL64	32.25	126.53	88.85	60.68	14.64						
	Interoffice Transport - Dedicated - DS1 combination - Per Mile Per Month			UNC1X	1L5XX	0.1813										
	interoffice Transport - Dedicated - DS1 combination - Facility Termination Per Month			UNC1X	U1TF1	51.72	89.79	82.28	16.86	14.90						
	1/0 Channel System in combination Per Month			UNC1X	MQ1	102.85	91.57	62.94	10.87	10.10						
	OCU-DP COCI (data) - in combination - per month (2.4-64kbs)			UNCDX	1D1DD	1.22	6.62	4.74	0.00	0.00						
	Additional 4-Wire 64Kbps Digital Grade Loop in same DS1 Interoffice Transport Combination - Zone 1		1	UNCDX	UDL64	27.44	126.53	88.85	60.68	14.64						
	Additional 4-Wire 64Kbps Digital Grade Loop in same DS1 Interoffice Transport Combination - Zone 2		2	UNCDX	UDL64	34.55	126.53	88.85	60.68	14.64						
	Additional 4-Wire 64Kbps Digital Grade Loop in same DS1 Interoffice Transport Combination - Zone 3		3	UNCDX	UDL64	40.76	126.53	88.85	60.68	14.64						
	Additional 4-Wire 64Kbps Digital Grade Loop in same DS1 Interoffice Transport Combination - Zone 4		4	UNCDX	UDL64	32.25	126.53	88.85	60.68	14.64						
	Additional OCU-DP COCI (data) - in combination - per month (2.4-64kbs)			UNCDX	1D1DD	1.22	6.62	4.74	0.00	0.00						
	Nonrecurring Currently Combined Network Elements Switch -As-Is Charge			UNC1X	UNCCC		5.63	5.63	7.20	7.20						
	EXTENDED 4-WIRE DS1 DIGITAL EXTENDED LOOP WITH DEDICATED DS1 INTEROFFICE TRANSPORT															
	4-Wire DS1 Digital Loop in Combination - Zone 1		1	UNC1X	USLXX	79.08	253.93	158.45	46.10	12.07						
	4-Wire DS1 Digital Loop in Combination - Zone 2		2	UNC1X	USLXX	129.38	253.93	158.45	46.10	12.07						
	4-Wire DS1 Digital Loop in Combination - Zone 3		3	UNC1X	USLXX	206.74	253.93	158.45	46.10	12.07						
	4-Wire DS1 Digital Loop in Combination - Zone 4		4	UNC1X	USLXX	458.46	253.93	158.45	46.10	12.07						
	Interoffice Transport - Dedicated - DS1 combination - Per Mile Per Month			UNC1X	1L5XX	0.1813										
	Interoffice Transport - Dedicated - DS1 combination - Facility Termination Per Month			UNC1X	U1TF1	51.72	89.79	82.28	16.86	14.90						
	Nonrecurring Currently Combined Network Elements Switch -As-Is Charge			UNC1X	UNCCC		5.63	5.63	7.20	7.20						
	EXTENDED 4-WIRE DS1 DIGITAL EXTENDED LOOP WITH DEDICATED DS3 INTEROFFICE TRANSPORT															
	First DS1Loop in Combination - Zone 1		1	UNC1X	USLXX	79.08	253.93	158.45	46.10	12.07						
	First DS1Loop in Combination - Zone 2		2	UNC1X	USLXX	129.38	253.93	158.45	46.10	12.07						
	First DS1Loop in Combination - Zone 3		3	UNC1X	USLXX	206.74	253.93	158.45	46.10	12.07						
	First DS1Loop in Combination - Zone 4		4	UNC1X	USLXX	458.46	253.93	158.45	46.10	12.07						
	Interoffice Transport - Dedicated - DS3 combination - Per Mile Per Month			UNC3X	1L5XX	4.29										
	Interoffice Transport - Dedicated - DS3 - Facility Termination per month			UNC3X	U1TF3	641.90	280.37	163.70	62.08	60.29						
	3/1Channel System in combination per month			UNC3X	MQ3	170.63	179.17	94.52	34.30	32.82						
	DS1 COCI in combination per month			UNC1X	UC1D1	2.62	6.62	4.74	0.00	0.00						
	Additional DS1Loop in DS3 Interoffice Transport Combination - Zone 1		1	UNC1X	USLXX	79.08	253.93	158.45	46.10	12.07						
	Additional DS1Loop in DS3 Interoffice Transport Combination - Zone 2		2	UNC1X	USLXX	129.38	253.93	158.45	46.10	12.07						
	Additional DS1Loop in DS3 Interoffice Transport Combination - Zone 3		3	UNC1X	USLXX	206.74	253.93	158.45	46.10	12.07						
	Additional DS1Loop in DS3 Interoffice Transport Combination - Zone 4		4	UNC1X	USLXX	458.46	253.93	158.45	46.10	12.07						
	Additoinal DS1 COCI in combination per month			UNC1X	UC1D1	2.62	6.62	4.74	0.00	0.00						
	Nonrecurring Currently Combined Network Elements Switch -As-Is Charge			UNC3X	UNCCC		5.63	5.63	7.20	7.20						
	EXTENDED 2-WIRE VOICE GRADE EXTENDED LOOP/ 2 WIRE VOICE GRADE INTEROFFICE TRANSPORT															
	2-WireVG Loop in combination - Zone 1		1	UNCVX	UEAL2	13.89	105.96	68.28	52.82	10.37						

CATEGORY	RATE ELEMENTS	Interim	Zone	BCS	USOC	RATES ($)					Svc Order Submitted Elec per LSR	Svc Order Submitted Manually per LSR	Attachment: 2 Incremental Charge - Manual Svc Order vs. Electronic-1st	Attachment: 2 Incremental Charge - Manual Svc Order vs. Electronic-Add'l	Exhibit: A Incremental Charge - Manual Svc Order vs. Electronic-Disc 1st	Exhibit: A Incremental Charge - Manual Svc Order vs. Electronic-Disc Add'l
						Rec	Nonrecurring		Nonrecurring Disconnect		OSS Rates ($)					
							First	Add'l	First	Add'l	SOMEC	SOMAN	SOMAN	SOMAN	SOMAN	SOMAN
	2-WireVG Loop in combination - Zone 2		2	UNCVX	UEAL2	18.75	105.96	68.28	52.82	10.37						
	2-WireVG Loop in combination - Zone 3		3	UNCVX	UEAL2	27.55	105.96	68.28	52.82	10.37						
	2-WireVG Loop in combination - Zone 4		4	UNCVX	UEAL2	45.72	105.96	68.28	52.82	10.37						
	Interoffice Transport - 2-wire VG - Dedicated- Per Mile Per Month			UNCVX	1L5XX	0.00088										
	Interoffice Transport - 2-wire VG - Dedicated - Facility Termination per month			UNCVX	U1TV2	20.32	40.77	27.57	17.26	7.11						
	Nonrecurring Currently Combined Network Elements Switch -As-Is Charge			UNCVX	UNCCC		5.63	5.63	7.20	7.20						
	EXTENDED 4-WIRE VOICE GRADE EXTENDED LOOP/ 4 WIRE VOICE GRADE INTEROFFICE TRANSPORT															
	4-WireVG Loop in combination - Zone 1		1	UNCVX	UEAL4	27.47	132.27	94.59	60.68	14.64						
	4-WireVG Loop in combination - Zone 2		2	UNCVX	UEAL4	38.26	132.27	94.59	60.68	14.64						
	4-WireVG Loop in combination - Zone 3		3	UNCVX	UEAL4	50.03	132.27	94.59	60.68	14.64						
	4-WireVG Loop in combination - Zone 4		4	UNCVX	UEAL4	50.03	132.27	94.59	60.68	14.64						
	Interoffice Transport - 4-wire VG - Dedicated - Per Mile Per Month			UNCVX	1L5XX	0.00088										
	Interoffice Transport - 4-wire VG - Dedicated - Facility Termination per month			UNCVX	U1TV4	17.86	40.77	27.57	17.26	7.11						
	Nonrecurring Currently Combined Network Elements Switch -As-Is Charge			UNCVX	UNCCC		5.63	5.63	7.20	7.20						
	EXTENDED DS3 DIGITAL EXTENDED LOOP WITH DEDICATED DS3 INTEROFFICE TRANSPORT															
	DS3 Local Loop in combination - per mile per month			UNC3X	1L5ND	11.20										
	DS3 Local Loop in combination - Facility Termination per month			UNC3X	UE3PX	252.17	454.13	265.47	123.23	86.19						
	Interoffice Transport - Dedicated - DS3 - Per Mile per month			UNC3X	1L5XX	4.29										
	Interoffice Transport - Dedicated - DS3 combination - Facility Termination per month			UNC3X	U1TF3	641.90	280.37	163.70	62.08	60.29						
	Nonrecurring Currently Combined Network Elements Switch -As-Is Charge			UNC3X	UNCCC		5.63	5.63	7.20	7.20						
	EXTENDED STS-1 DIGITAL EXTENDED LOOP WITH DEDICATED STS-1 INTEROFFICE TRANSPORT															
	STS-1 Local Lolp in combination - per mile per month			UNCSX	1L5ND	11.20										
	STS-1 Local Loop in combination - Facility Termination per month			UNCSX	UDLS1	264.35	454.13	265.47	123.23	86.19						
	Interoffice Transport - Dedicated - STS-1 combination - per mile per month			UNCSX	1L5XX	4.29										
	Interoffice Transport - Dedicated - STS-1 combination - Facility Termination per month			UNCSX	U1TFS	644.21	280.37	163.70	62.08	60.29						
	Nonrecurring Currently Combined Network Elements Switch -As-Is Charge			UNCSX	UNCCC		5.63	5.63	7.20	7.20						
	EXTENDED 2-WIRE ISDN EXTENDED LOOP WITH DS1 INTEROFFICE TRANSPORT															
	First 2-Wire ISDN Loop in Combination - Zone 1		1	UNCNX	U1L2X	21.01	117.61	79.92	52.82	10.37						
	First 2-Wire ISDN Loop in Combination - Zone 2		2	UNCNX	U1L2X	27.59	117.61	79.92	52.82	10.37						
	First 2-Wire ISDN Loop in Combination - Zone 3		3	UNCNX	U1L2X	37.34	117.61	79.92	52.82	10.37						
	First 2-Wire ISDN Loop in Combination - Zone 4		4	UNCNX	U1L2X	59.18	117.61	79.92	52.82	10.37						
	Interoffice Transport - Dedicated - DS1 combination - per mile per month			UNC1X	1L5XX	0.1813										
	Interoffice Transport - Dedicated - DS1 combination - Facility Termination per month			UNC1X	U1TF1	51.72	89.79	82.28	16.86	14.90						
	1/0 Channel System in combination - per month			UNC1X	MQ1	102.85	91.57	62.94	10.87	10.10						
	2-wire ISDN COCI (BRITE) - in combination - per month			UNCNX	UC1CA	2.62	6.62	4.74	0.00	0.00						
	Additional 2-wire ISDN Loop in same DS1Interoffice Transport Combination - Zone 1		1	UNCNX	U1L2X	21.01	117.61	79.92	52.82	10.37						
	Additional 2-wire ISDN Loop in same DS1Interoffice Transport Combination - Zone 2		2	UNCNX	U1L2X	27.59	117.61	79.92	52.82	10.37						
	Additional 2-wire ISDN Loop in same DS1Interoffice Transport Combination - Zone 3		3	UNCNX	U1L2X	37.34	117.61	79.92	52.82	10.37						
	Additional 2-wire ISDN Loop in same DS1Interoffice Transport Combination - Zone 4		4	UNCNX	U1L2X	59.18	117.61	79.92	52.82	10.37						

CATEGORY	RATE ELEMENTS	Interim	Zone	BCS	USOC	RATES ($)					Svc Order Submitted Elec per LSR	Svc Order Submitted Manually per LSR	Attachment: 2 Incremental Charge - Manual Svc Order vs. Electronic-1st	Attachment: 2 Incremental Charge - Manual Svc Order vs. Electronic-Add'l	Exhibit: A Incremental Charge - Manual Svc Order vs. Electronic-Disc 1st	Exhibit: A Incremental Charge - Manual Svc Order vs. Electronic-Disc Add'l
						Rec	Nonrecurring		Nonrecurring Disconnect		OSS Rates ($)					
							First	Add'l	First	Add'l	SOMEC	SOMAN	SOMAN	SOMAN	SOMAN	SOMAN
	Additional 2-wire ISDN COCI (BRITE) - in combination- per month			UNCNX	UC1CA	2.62	6.62	4.74	0.00	0.00						
	Nonrecurring Currently Combined Network Elements Switch -As-Is Charge			UNC1X	UNCCC		5.63	5.63	7.20	7.20						
EXTENDED 4-WIRE DS1 DIGITAL EXTENDED LOOP WITH DEDICATED STS-1 INTEROFFICE TRANSPORT																
	First DS1 Loop Combination - Zone 1		1	UNC1X	USLXX	79.08	253.93	158.45	46.10	12.07						
	First DS1 Loop Combination - Zone 2		2	UNC1X	USLXX	129.38	253.93	158.45	46.10	12.07						
	First DS1 Loop Combination - Zone 3		3	UNC1X	USLXX	206.74	253.93	158.45	46.10	12.07						
	First DS1 Loop Combination - Zone 4		4	UNC1X	USLXX	458.46	253.93	158.45	46.10	12.07						
	Interoffice Transport - Dedicated - STS-1 combination - Per Mile Per Month			UNCSX	1L5XX	4.29										
	Interoffice Transport - Dedicated - STS-1 combination - Facility Termination per month			UNCSX	U1TFS	644.21	280.37	163.70	62.08	60.29						
	3/1 Channel System in combination per month			UNCSX	MQ3	170.63	179.17	94.52	34.30	32.82						
	DS1 COCI in combination per month			UNC1X	UC1D1	2.62	6.62	4.74	0.00	0.00						
	Additional DS1Loop in the same STS-1 Interoffice Transport Combination - Zone 1		1	UNC1X	USLXX	79.08	253.93	158.45	46.10	12.07						
	Additional DS1Loop in the same STS-1 Interoffice Transport Combination - Zone 2		2	UNC1X	USLXX	129.38	253.93	158.45	46.10	12.07						
	Additional DS1Loop in the same STS-1 Interoffice Transport Combination - Zone 3		3	UNC1X	USLXX	206.74	253.93	158.45	46.10	12.07						
	Additional DS1Loop in the same STS-1 Interoffice Transport Combination - Zone 4		4	UNC1X	USLXX	458.46	253.93	158.45	46.10	12.07						
	DS1 COCI in combination per month			UNC1X	UC1D1	2.62	6.62	4.74	0.00	0.00						
	Nonrecurring Currently Combined Network Elements Switch -As-Is Charge			UNCSX	UNCCC		5.63	5.63	7.20	7.20						
EXTENDED 4-WIRE 56 KBPS DIGITAL EXTENDED LOOP WITH 56 KBPS INTEROFFICE TRANSPORT																
	4-wire 56 kbps Local Loop in combination - Zone 1		1	UNCDX	UDL56	27.44	126.53	88.85	60.68	14.64						
	4-wire 56 kbps Local Loop in combination - Zone 2		2	UNCDX	UDL56	34.55	126.53	88.85	60.68	14.64						
	4-wire 56 kbps Local Loop in combination - Zone 3		3	UNCDX	UDL56	40.76	126.53	88.85	60.68	14.64						
	4-wire 56 kbps Local Loop in combination - Zone 4		4	UNCDX	UDL56	32.25	126.53	88.85	60.68	14.64						
	Interoffice Transport - Dedicated - 4-wire 56 kbps combination - Per Mile per month			UNCDX	1L5XX	0.0098										
	Interoffice Transport - Dedicated - 4-wire 56 kbps combination - Facility Termination per month			UNCDX	U1TD5	22.52	40.78	27.57	17.26	7.11						
	Nonrecurring Currently Combined Network Elements Switch -As-Is Charge			UNCDX	UNCCC		5.63	5.63	7.20	7.20						
EXTENDED 4-WIRE 64 KBPS DIGITAL EXTENDED LOOP WITH 64 KBPS INTEROFFICE TRANSPORT																
	4-wire 64 kbps Lcoal Loop in Combination - Zone 1		1	UNCDX	UDL64	27.44	126.53	88.85	60.68	14.64						
	4-wire 64 kbps Lcoal Loop in Combination - Zone 2		2	UNCDX	UDL64	34.55	126.53	88.85	60.68	14.64						
	4-wire 64 kbps Lcoal Loop in Combination - Zone 3		3	UNCDX	UDL64	40.76	126.53	88.85	60.68	14.64						
	4-wire 64 kbps Lcoal Loop in Combination - Zone 4		4	UNCDX	UDL64	32.25	126.53	88.85	60.68	14.64						
	Interoffice Transport - Dedicated - 4-wire 64 kbps combination - Per Mile per month			UNCDX	1L5XX	0.0098										
	Interoffice Transport - Dedicated - 4-wire 64 kbps combination - Facility Termination per month			UNCDX	U1TD6	22.52	40.78	27.57	17.26	7.11						
	Nonrecurring Currently Combined Network Elements Switch -As-Is Charge			UNCDX	UNCCC		5.63	5.63	7.20	7.20						
EXTENDED 2-WIRE VOICE GRADE LOOP WITH DS1 INTEROFFICE TRANSPORT w/ 3/1 MUX																
	First 2-wire VG Loop (SL2) in Combination - Zone 1		1	UNCVX	UEAL2	13.89	105.96	68.28	52.82	10.37						
	First 2-wire VG Loop (SL2) in Combination - Zone 2		2	UNCVX	UEAL2	18.75	105.96	68.28	52.82	10.37						
	First 2-wire VG Loop (SL2) in Combination - Zone 3		3	UNCVX	UEAL2	27.55	105.96	68.28	52.82	10.37						
	First 2-wire VG Loop (SL2) in Combination - Zone 4		4	UNCVX	UEAL2	45.72	105.96	68.28	52.82	10.37						
	First Interoffice Transport - Dedicated - DS1 combination - Per Mile			UNC1X	1L5XX	0.1813										
	First Interoffice Transport - Dedicated - DS1 combination - Facility Termination per month			UNC1X	U1TF1	51.72	89.79	82.28	16.86	14.90						
	Per each DS1 Channelization System Per Month			UNC1X	MQ1	102.85	91.57	62.94	10.87	10.10						
	Per each Voice Grade COCI - Per Month per month			UNCVX	1D1VG	0.5737	6.62	4.74								

CATEGORY	RATE ELEMENTS	Interim	Zone	BCS	USOC	RATES ($) Rec	Nonrecurring First	Nonrecurring Add'l	Nonrecurring Disconnect First	Nonrecurring Disconnect Add'l	Svc Order Submitted Elec per LSR	Svc Order Submitted Manually per LSR	Attachment: 2 Incremental Charge - Manual Svc Order vs. Electronic-1st	Attachment: 2 Incremental Charge - Manual Svc Order vs. Electronic-Add'l	Exhibit: A Incremental Charge - Manual Svc Order vs. Electronic-Disc 1st	Exhibit: A Incremental Charge - Manual Svc Order vs. Electronic-Disc Add'l
											OSS Rates ($)					
											SOMEC	SOMAN	SOMAN	SOMAN	SOMAN	SOMAN
	3/1 Channel System in combination per month			UNC3X	MQ3	170.63	179.17	94.52	34.30	32.82						
	Per each DS1 COCI in combination per month			UNC1X	UC1D1	2.62	6.62	4.74	0.00	0.00						
	Each Additional 2-Wire VG Loop(SL 2) in the same DS1 Interoffice Transport Combination - Zone 1		1	UNCVX	UEAL2	13.89	105.96	68.28	52.82	10.37						
	Each Additional 2-Wire VG Loop(SL2) in the same DS1 Interoffice Transport Combination - Zone 2		2	UNCVX	UEAL2	18.75	105.96	68.28	52.82	10.37						
	Each Additional 2-Wire VG Loop(SL2) in the same DS1 Interoffice Transport Combination - Zone 3		3	UNCVX	UEAL2	27.55	105.96	68.28	52.82	10.37						
	Each Additional 2-Wire VG Loop(SL2) in the same DS1 Interoffice Transport Combination - Zone 4		4	UNCVX	UEAL2	45.72	105.96	68.28	52.82	10.37						
	Each Additional Voice Grade COCI in combination - per month			UNCVX	1D1VG	0.5737	6.62	4.74								
	Each Additional DS1 Interoffice Channel per mile in same 3/1 Channel System per month			UNC1X	1L5XX	0.1813										
	Each Additional DS1 Interoffice Channel Facility Termination in same 3/1 Channel System per month			UNC1X	U1TF1	51.72	89.79	82.28	16.86	14.90						
	Each Additional DS1 COCI combination per month			UNC1X	UC1D1	2.62	6.62	4.74	0.00	0.00						
	Nonrecurring Currently Combined Network Elements Switch -As-Is Charge			UNC1X	UNCCC		5.63	5.63	7.20	7.20						
	EXTENDED 4-WIRE VOICE GRADE LOOP WITH DEDICATED DS1 INTEROFFICE TRANSPORT w/ 3/1 MUX															
	First 4-Wire Analog Voice Grade Local Loop in Combination - Zone 1		1	UNCVX	UEAL4	27.47	132.27	94.59	60.68	14.64						
	First 4-Wire Analog Voice Grade Local Loop in Combination - Zone 2		2	UNCVX	UEAL4	38.26	132.27	94.59	60.68	14.64						
	First 4-Wire Analog Voice Grade Local Loop in Combination - Zone 3		3	UNCVX	UEAL4	50.03	132.27	94.59	60.68	14.64						
	First 4-Wire Analog Voice Grade Local Loop in Combination - Zone 4		4	UNCVX	UEAL4	50.03	132.27	94.59	60.68	14.64						
	First Interoffice Transport - Dedicated - DS1 combination - Per Mile Per Month			UNC1X	1L5XX	0.1813										
	First Interoffice Transport - Dedicated - DS1 - Facility Termination Per Month			UNC1X	U1TF1	51.72	89.79	82.28	16.86	14.90						
	Per each 1/0 Channel System in combination Per Month			UNC1X	MQ1	102.85	91.57	62.94	10.87	10.10						
	Per each Voice Grade COCI in combination - per month			UNCVX	1D1VG	0.5737	6.62	4.74								
	3/1 Channel System in combination per month			UNC3X	MQ3	170.63	179.17	94.52	34.30	34.30						
	Per each DS1 COCI in combination per month			UNC1X	UC1D1	2.62	6.62	4.74	0.00	0.00						
	Additional 4-Wire Analog Voice Grade Loop in same DS1 Interoffice Transport Combination - Zone 1		1	UNCVX	UEAL4	27.47	132.27	94.59	60.68	14.64						
	Additional 4-Wire Analog Voice Grade Loop in same DS1 Interoffice Transport Combination - Zone 2		2	UNCVX	UEAL4	38.26	132.27	94.59	60.68	14.64						
	Additional 4-Wire Analog Voice Grade Loop in same DS1 Interoffice Transport Combination - Zone 3		3	UNCVX	UEAL4	50.03	132.27	94.59	60.68	14.64						
	Additional 4-Wire Analog Voice Grade Loop in same DS1 Interoffice Transport Combination - Zone 4		4	UNCVX	UEAL4	50.03	132.27	94.59	60.68	14.64						
	Each Additional DS1 Interoffice Channel per mile in same 3/1 Channel System per month			UNC1X	1L5XX	0.1813										
	Each Additional DS1 Interoffice Channel Facility Termination in same 3/1 Channel System per month			UNC1X	U1TF1	51.72	89.79	82.28	16.86	14.90						
	Additional Voice Grade COCI - in combination - per month			UNCVX	1D1VG	0.5737	6.62	4.74								
	Nonrecurring Currently Combined Network Elements Switch -As-Is Charge			UNC1X	UNCCC		5.63	5.63	7.20	7.20						
	EXTENDED 4-WIRE 56 KBPS DIGITAL LOOP WITH DEDICATED DS1 INTEROFFICE TRANSPORT w/ 3/1 MUX															
	First 4-Wire 56Kbps Digital Grade Local Loop in Combination - Zone 1		1	UNCDX	UDL56	27.44	126.53	88.85	60.68	14.64						
	First 4-Wire 56Kbps Digital Grade Local Loop in Combination - Zone 2		2	UNCDX	UDL56	34.55	126.53	88.85	60.68	14.64						
	First 4-Wire 56Kbps Digital Grade Local Loop in Combination - Zone 3		3	UNCDX	UDL56	40.76	126.53	88.85	60.68	14.64						
	First 4-Wire 56Kbps Digital Grade Local Loop in Combination - Zone 4		4	UNCDX	UDL56	32.25	126.53	88.85	60.68	14.64						

CATEGORY		RATE ELEMENTS	Interim	Zone	BCS	USOC	RATES ($)					Svc Order Submitted Elec per LSR	Svc Order Submitted Manually per LSR	Attachment: 2 Incremental Charge - Manual Svc Order vs. Electronic-1st	Attachment: 2 Incremental Charge - Manual Svc Order vs. Electronic-Add'l	Exhibit: A Incremental Charge - Manual Svc Order vs. Electronic-Disc 1st	Exhibit: A Incremental Charge - Manual Svc Order vs. Electronic-Disc Add'l
							Rec	Nonrecurring		Nonrecurring Disconnect		OSS Rates ($)					
								First	Add'l	First	Add'l	SOMEC	SOMAN	SOMAN	SOMAN	SOMAN	SOMAN
		First Interoffice Transport - Dedicated - DS1 combination - Per Mile Per Month			UNC1X	1L5XX	0.1813										
		First Interoffice Transport - Dedicated - DS1 - combination Facility Termination Per Month			UNC1X	U1TF1	51.72	89.79	82.28	16.86	14.90						
		Per each 1/0 Channel System in combination Per Month			UNC1X	MQ1	102.85	91.57	62.94	10.87	10.10						
		Per each OCU-DP COCI (data) COCI per month (2.4-64kbs)			UNCDX	1D1DD	1.22	6.62	4.74	0.00	0.00						
		3/1 Channel System in combination per month			UNC3X	MQ3	170.63	179.17	94.52	34.30	32.82						
		Per each DS1 COCI in combination per month			UNC1X	UC1D1	2.62	6.62	4.74	0.00	0.00						
		Additional 4-Wire 56Kbps Digital Grade Loop in same DS1 Interoffice Transport Combination - Zone 1		1	UNCDX	UDL56	27.44	126.53	88.85	60.68	14.64						
		Additional 4-Wire 56Kbps Digital Grade Loop in same DS1 Interoffice Transport Combination - Zone 2		2	UNCDX	UDL56	34.55	126.53	88.85	60.68	14.64						
		Additional 4-Wire 56Kbps Digital Grade Loop in same DS1 Interoffice Transport Combination - Zone 3		3	UNCDX	UDL56	40.76	126.53	88.85	60.68	14.64						
		Additional 4-Wire 56Kbps Digital Grade Loop in same DS1 Interoffice Transport Combination - Zone 4		4	UNCDX	UDL56	32.25	126.53	88.85	60.68	14.64						
		OCU-DP COCI (data) COCI in combination per month (2.4-64kbs)			UNCDX	1D1DD	1.22	6.62	4.74	0.00	0.00						
		Each Additional DS1 Interoffice Channel per mile in same 3/1 Channel System per month			UNC1X	1L5XX	0.1813										
		Each Additional DS1 Interoffice Channel Facility Termination in same 3/1 Channel System per month			UNC1X	U1TF1	51.72	89.79	82.28	16.86	14.90						
		Each Additional DS1 COCI in the same 3/1 channel system combination per month			UNC1X	UC1D1	2.62	6.62	4.74	0.00	0.00						
		Nonrecurring Currently Combined Network Elements Switch -As-Is Charge			UNC1X	UNCCC		5.63	5.63	7.20	7.20						
	EXTENDED 4-WIRE 64 KBPS DIGITAL LOOP WITH DEDICATED DS1 INTEROFFICE TRANSPORT w/ 3/1 MUX																
		First 4-Wire 64Kbps Digital Grade Loop in a DS1 Interoffice Transport Combination - Zone 1		1	UNCDX	UDL64	27.44	126.53	88.85	60.68	14.64						
		First 4-Wire 64Kbps Digital Grade Loop in a DS1 Interoffice Transport Combination - Zone 2		2	UNCDX	UDL64	34.55	126.53	88.85	60.68	14.64						
		First 4-Wire 64Kbps Digital Grade Loop in a DS1 Interoffice Transport Combination - Zone 3		3	UNCDX	UDL64	40.76	126.53	88.85	60.68	14.64						
		First 4-Wire 64Kbps Digital Grade Loop in a DS1 Interoffice Transport Combination - Zone 4		4	UNCDX	UDL64	32.25	126.53	88.85	60.68	14.64						
		First Interoffice Transport - Dedicated - DS1 combination - Per Mile Per Month			UNC1X	1L5XX	0.1813										
		First Interoffice Transport - Dedicated - DS1 combination - Facility Termination Per Month			UNC1X	U1TF1	51.72	89.79	82.28	16.86	14.90						
		Per each Channel System 1/0 in combination Per Month			UNC1X	MQ1	102.85	91.57	62.94	10.87	10.10						
		Per each OCU-DP COCI (data) in combination - per month (2.4-64kbs)			UNCDX	1D1DD	1.22	6.62	4.74	0.00	0.00						
		3/1 Channel System in combination per month			UNC3X	MQ3	170.63	179.17	94.52	34.30	32.82						
		Per each DS1 COCI in combination per month			UNC1X	UC1D1	2.62	6.62	4.74	0.00	0.00						
		Additional 4-Wire 64Kbps Digital Grade Loop in same DS1 Interoffice Transport Combination - Zone 1		1	UNCDX	UDL64	27.44	126.53	88.85	60.68	14.64						
		Additional 4-Wire 64Kbps Digital Grade Loop in same DS1 Interoffice Transport Combination - Zone 2		2	UNCDX	UDL64	34.55	126.53	88.85	60.68	14.64						
		Additional 4-Wire 64Kbps Digital Grade Loop in same DS1 Interoffice Transport Combination - Zone 3		3	UNCDX	UDL64	40.76	126.53	88.85	60.68	14.64						
		Additional 4-Wire 64Kbps Digital Grade Loop in same DS1 Interoffice Transport Combination - Zone 4		4	UNCDX	UDL64	32.25	126.53	88.85	60.68	14.64						
		Additional OCU-DP COCI (data) - DS1 to DS0 Channel System combination - per month (2.4-64kbs)			UNCDX	1D1DD	1.22	6.62	4.74	0.00	0.00						
		Each Additional DS1 Interoffice Channel per mile in same 3/1 Channel System per month			UNC1X	1L5XX	0.1813										
		Each Additional DS1 Interoffice Channel Facility Termination in same 3/1 Channel System per month			UNC1X	U1TF1	51.72	89.79	82.28	16.86	14.90						

CATEGORY		RATE ELEMENTS	Interim	Zone	BCS	USOC	RATES ($)					Svc Order Submitted Elec per LSR	Svc Order Submitted Manually per LSR	Attachment: 2 Incremental Charge - Manual Svc Order vs. Electronic-1st	Attachment: 2 Incremental Charge - Manual Svc Order vs. Electronic-Add'l	Exhibit: A Incremental Charge - Manual Svc Order vs. Electronic-Disc 1st	Exhibit: A Incremental Charge - Manual Svc Order vs. Electronic-Disc Add'l
							Rec	Nonrecurring		Nonrecurring Disconnect		OSS Rates ($)					
								First	Add'l	First	Add'l	SOMEC	SOMAN	SOMAN	SOMAN	SOMAN	SOMAN
		Each Additional DS1 COCI in the same 3/1 channel system combination per month			UNC1X	UC1D1	2.62	6.62	4.74	0.00	0.00						
		Nonrecurring Currently Combined Network Elements Switch -As-Is Charge			UNC1X	UNCCC		5.63	5.63	7.20	7.20						
	EXTENDED 2-WIRE ISDN LOOP WITH DS1 INTEROFFICE TRANSPORT w/ 3/1 MUX																
		First 2-Wire ISDN Loop in a DS1 Interoffice Combination Transport - Zone 1		1	UNCNX	U1L2X	21.01	117.61	79.92	52.82	10.37						
		First 2-Wire ISDN Loop in a DS1 Interoffice Combination Transport - Zone 2		2	UNCNX	U1L2X	27.59	117.61	79.92	52.82	10.37						
		First 2-Wire ISDN Loop in a DS1 Interoffice Combination Transport - Zone 3		3	UNCNX	U1L2X	37.34	117.61	79.92	52.82	10.37						
		First 2-Wire ISDN Loop in a DS1 Interoffice Combination Transport - Zone 4		4	UNCNX	U1L2X	59.18	117.61	79.92	52.82	10.37						
		First Interoffice Transport - Dedicated - DS1 combination - Per Mile per month			UNC1X	1L5XX	0.1813										
		First Interoffice Transport - Dedicated - DS1 combination - Facility Termination per month			UNC1X	U1TF1	51.72	89.79	82.28	16.86	14.90						
		Per each Channel System 1/0 in combination - per month			UNC1X	MQ1	102.85	91.57	62.94	10.87	10.10						
		Per each 2-wire ISDN COCI (BRITE) in combination - per month			UNCNX	UC1CA	2.62	6.62	4.74	0.00	0.00						
		3/1 Channel System in combination per month			UNC3X	MQ3	170.63	179.17	94.52	34.30	32.82						
		Per each DS1 COCI in combination per month			UNC1X	UC1D1	2.62	6.62	4.74	0.00	0.00						
		Additional 2-wire ISDN Loop in same DS1Interoffice Transport Combination - Zone 1		1	UNCNX	U1L2X	21.01	117.61	79.92	52.82	10.37						
		Additional 2-wire ISDN Loop in same DS1Interoffice Transport Combination - Zone 2		2	UNCNX	U1L2X	27.59	117.61	79.92	52.82	10.37						
		Additional 2-wire ISDN Loop in same DS1Interoffice Transport Combination - Zone 3		3	UNCNX	U1L2X	37.34	117.61	79.92	52.82	10.37						
		Additional 2-wire ISDN Loop in same DS1Interoffice Transport Combination - Zone 4		4	UNCNX	U1L2X	59.18	117.61	79.92	52.82	10.37						
		Additional 2-wire ISDN COCI (BRITE) in same 1/0 channel system combination- per month			UNCNX	UC1CA	2.62	6.62	4.74	0.00	0.00						
		Each Additional DS1 Interoffice Channel per mile in same 3/1 Channel System per month			UNC1X	1L5XX	0.1813										
		Each Additional DS1 Interoffice Channel Facility Termination in same 3/1 Channel System per month			UNC1X	U1TF1	51.72	89.79	82.28	16.86	14.90						
		Each Additional DS1 COCI in the same 3/1 channel system combination per month			UNC1X	UC1D1	2.62	6.62	4.74	0.00	0.00						
		Nonrecurring Currently Combined Network Elements Switch -As-Is Charge			UNC1X	UNCCC		5.63	5.63	7.20	7.20						
	EXTENDED 4-WIRE DS1 LOOP WITH DEDICATED DS1 INTEROFFICE TRANSPORT w/ 3/1 MUX																
		First 4-wire DS1 Digital Lcoal Loop in Combination - Zone 1		1	UNC1X	USLXX	79.08	253.93	158.45	46.10	12.07						
		First 4-wire DS1 Digital Lcoal Loop in Combination - Zone 2		2	UNC1X	USLXX	129.38	253.93	158.45	46.10	12.07						
		First 4-wire DS1 Digital Lcoal Loop in Combination - Zone 3		3	UNC1X	USLXX	206.74	253.93	158.45	46.10	12.07						
		First 4-wire DS1 Digital Lcoal Loop in Combination - Zone 4		4	UNC1X	USLXX	458.46	253.93	158.45	46.10	12.07						
		First Interoffice Transport - Dedicated - DS1 combination - Per Mile Per Month			UNC1X	1L5XX	0.1813										
		First Interoffice Transport - Dedicated - DS1 combination - Facility Termination Per Month			UNC1X	U1TF1	51.72	89.79	82.28	16.86	14.90						
		3/1 Channel System in combination per month			UNC3X	MQ3	170.63	179.17	94.52	34.30	32.82						
		Per each DS1 COCI combination per month			UNC1X	UC1D1	2.62	6.62	4.74	0.00	0.00						
		Each Additional DS1 Interoffice Channel per mile in same 3/1 Channel System per month			UNC1X	1L5XX	0.1813										
		Each Additional DS1 Interoffice Channel Facility Termination in same 3/1 Channel System per month			UNC1X	U1TF1	51.72	89.79	82.28	16.86	14.90						
		Each Additional DS1 COCI in the same 3/1 channel system combination per month			UNC1X	UC1D1	2.62	6.62	4.74	0.00	0.00						
		Additional 4-Wire DS1 Digital Local Loop in Combination - Zone 1		1	UNC1X	USLXX	79.08	253.93	158.45	46.10	12.07						

UNBUNDLED NETWORK ELEMENTS - Mississippi														Attachment: 2		Exhibit: A	
CATEGORY		RATE ELEMENTS	Interim	Zone	BCS	USOC	RATES ($)					Svc Order Submitted Elec per LSR	Svc Order Submitted Manually per LSR	Incremental Charge - Manual Svc Order vs. Electronic-1st	Incremental Charge - Manual Svc Order vs. Electronic-Add'l	Incremental Charge - Manual Svc Order vs. Electronic-Disc 1st	Incremental Charge - Manual Svc Order vs. Electronic-Disc Add'l
							Rec	Nonrecurring		Nonrecurring Disconnect		OSS Rates ($)					
								First	Add'l	First	Add'l	SOMEC	SOMAN	SOMAN	SOMAN	SOMAN	SOMAN
		Additional 4-Wire DS1 Digital Local Loop in Combination - Zone 2		2	UNC1X	USLXX	129.38	253.93	158.45	46.10	12.07						
		Additional 4-Wire DS1 Digital Local Loop in Combination - Zone 3		3	UNC1X	USLXX	206.74	253.93	158.45	46.10	12.07						
		Additional 4-Wire DS1 Digital Local Loop in Combination - Zone 4		4	UNC1X	USLXX	458.46	253.93	158.45	46.10	12.07						
		Nonrecurring Currently Combined Network Elements Switch -As-Is Charge			UNC1X	UNCCC		5.63	5.63	7.20	7.20						
	EXTENDED 4-WIRE 56 KBPS DIGITAL EXTENDED LOOP WITH DS0 INTEROFFICE TRANSPORT																
		First 4-wire 56 kbps Local Loop in combination - Zone 1		1	UNCDX	UDL56	27.44	126.53	88.85	60.68	14.64						
		First 4-wire 56 kbps Local Loop in combination - Zone 2		2	UNCDX	UDL56	34.55	126.53	88.85	60.68	14.64						
		First 4-wire 56 kbps Local Loop in combination - Zone 3		3	UNCDX	UDL56	40.76	126.53	88.85	60.68	14.64						
		First 4-wire 56 kbps Local Loop in combination - Zone 4		4	UNCDX	UDL56	32.25	126.53	88.85	60.68	14.64						
		First 4-wiree 56 kbps Interoffice Transport - Dedicated - Per Mile per month			UNCDX	1L5XX	0.0098										
		First 4-wire 56 kbps Interoffice Transport - Dedicated - Facility Termination per month			UNCDX	U1TD5	22.52	40.78	27.57	17.26	7.11						
		Nonrecurring Currently Combined Network Elements Switch -As-Is Charge			UNCDX	UNCCC		5.63	5.63	7.20	7.20						
	EXTENDED 4-WIRE 64 KBPS DIGITAL EXTENDED LOOP WITH DS0 INTEROFFICE TRANSPORT																
		First 4-wire 64 kbps Local Loop in combination - Zone 1		1	UNCDX	UDL64	27.44	126.53	88.85	60.68	14.64						
		First 4-wire 64 kbps Local Loop in combination - Zone 2		2	UNCDX	UDL64	34.55	126.53	88.85	60.68	14.64						
		First 4-wire 64 kbps Local Loop in combination - Zone 3		3	UNCDX	UDL64	40.76	126.53	88.85	60.68	14.64						
		First 4-wire 64 kbps Local Loop in combination - Zone 4		4	UNCDX	UDL64	32.25	126.53	88.85	60.68	14.64						
		First I4-wire 65 kbps Interoffice Transport - Dedicated - Per Mile per month			UNCDX	1L5XX	0.0098										
		First 4-wire 64 kbps Interoffice Transport - Dedicated - Facility Termination per month			UNCDX	U1TD6	22.52	40.78	27.57	17.26	7.11						
		Nonrecurring Currently Combined Network Elements Switch -As-Is Charge			UNCDX	UNCCC		5.63	5.63	7.20	7.20						
ADDITIONAL NETWORK ELEMENTS																	
	When used as a part of a currently combined facility, the non-recurrng charges do not apply, but a Switch As Is charge does apply.																
	When used as ordinarily combined network elements in All States, the non-recurring charges apply and the Switch As Is Charge does not.																
	Nonrecurring Currently Combined Network Elements "Switch As Is" Charge (One applies to each combination)																
		Nonrecurring Currently Combined Network Elements Switch -As-Is Charge - 2 wire/4-Wire VG			UNCVX	UNCCC		5.63	5.63	7.20	7.20						
		Nonrecurring Currently Combined Network Elements Switch -As-Is Charge - 56/64 kbps			UNCDX	UNCCC		5.63	5.63	7.20	7.20						
		Nonrecurring Currently Combined Network Elements Switch -As-Is Charge - DS1			UNC1X	UNCCC		5.63	5.63	7.20	7.20						
		Nonrecurring Currently Combined Network Elements Switch -As-Is Charge - DS3			UNC3X	UNCCC		5.63	5.63	7.20	7.20						
		Nonrecurring Currently Combined Network Elements Switch -As-Is Charge - STS1			UNCSX	UNCCC		5.63	5.63	7.20	7.20						
	Optional Features & Functions:																
		Clear Channel Capability Extended Frame Option - per DS1	I		U1TD1, ULDD1,UNC1X	CCOEF		0I	0I	0I	0I						
		Clear Channel Capability Super FrameOption - per DS1	I		U1TD1, ULDD1,UNC1X	CCOSF		0I	0I	0I	0I						
		Clear Channel Capability (SF/ESF) Option - Subsequent Activity - per DS1	I		ULDD1, U1TD1, UNC1X, USL	NRCCC		184.6S	23.78S	1.96S	0.76S						
		C-bit Parity Option - Subsequent Activity - per DS3	i		U1TD3, ULDD3, UE3, UNC3X	NRCC3		218.72S	7.66S	.7201S	0S						
	MULTIPLEXERS																
		DS1 to DS0 Channel System per month			UNC1X	MQ1	102.85	91.57	62.94	10.87	10.10						
		OCU-DP COCI (data) - DS1 to DS0 Channel System - per month (2.4-64kbs) used for a Local Loop			UDL	1D1DD	1.22	6.62	4.74								

CATEGORY	RATE ELEMENTS	Interim	Zone	BCS	USOC	RATES ($)					Svc Order Submitted Elec per LSR	Svc Order Submitted Manually per LSR	Attachment: 2 Incremental Charge - Manual Svc Order vs. Electronic-1st	Attachment: 2 Incremental Charge - Manual Svc Order vs. Electronic-Add'l	Exhibit: A Incremental Charge - Manual Svc Order vs. Electronic-Disc 1st	Exhibit: A Incremental Charge - Manual Svc Order vs. Electronic-Disc Add'l
						Rec	Nonrecurring		Nonrecurring Disconnect		OSS Rates ($)					
							First	Add'l	First	Add'l	SOMEC	SOMAN	SOMAN	SOMAN	SOMAN	SOMAN
	OCU-DP COCI (data) - DS1 to DS0 Channel System - per month (2.4-64kbs) used for connection to a channelized DS1 Local Channel in the same SWC as collocation			U1TUD	1D1DD	1.22	6.62	4.74								
	2-wire ISDN COCI (BRITE) - DS1 to DS0 Channel Systsem - per month for a Local Loop			UDN	UC1CA	2.62	6.62	4.74								
	2-wire ISDN COCI (BRITE) - DS1 to DS0 Channel Systsem - per month used for connection to a channelized DS1 Local Channel in the same SWC as collocation			U1TUB	UC1CA	2.62	6.62	4.74								
	Voice Grade COCI - DS1 to DS0 Channel System - per month used for a Local Loop			UEA	1D1VG	0.5737	6.62	4.74								
	Voice Grade COCI - DS1 to DS0 Channel System - per month used for connection to a channelized DS1 Local Channel in the same SWC as collocation			U1TUC	1D1VG	0.5737	6.62	4.74								
	DS3 to DS1 Channel System per month			UNC3X	MQ3	170.63	179.17	94.52	34.30	32.82						
	STS-1 to DS1 Channel System per month			UNCSX	MQ3	170.63	179.17	94.52	34.30	32.82						
	DS1 COCI used with Loop per month			USL	UC1D1	12.96	6.62	4.74								
	DS1 COCI (used for connection to a channelized DS1 Local Channel in the same SWC as collocation) per month			U1TUA	UC1D1	12.96	6.62	4.74								
	DS1 COCI used with Interoffice Channel per month			U1TD1	UC1D1	12.96	6.62	4.74								
	DS3 Interface Unit (DS1 COCI) used with Local Channel per month			ULDD1	UC1D1	12.96	6.62	4.74								
UNBUNDLED LOCAL EXCHANGE SWITCHING(PORTS)																
Exchange Ports																
NOTE: Although the Port Rate includes all available features in GA, KY, LA & TN, the desired features will need to be ordered using retail USOCs																
2-WIRE VOICE GRADE LINE PORT RATES (RES)																
	Exchange Ports - 2-Wire Analog Line Port- Res.			UEPSR	UEPRL	1.41	2.39	2.29	1.42	1.33						
	Exchange Ports - 2-Wire Analog Line Port with Caller ID - Res.			UEPSR	UEPRC	1.41	2.39	2.29	1.42	1.33						
	Exchange Ports - 2-Wire Analog Line Port outgoing only - Res.			UEPSR	UEPRO	1.41	2.39	2.29	1.42	1.33						
	Exchange Ports - 2-Wire VG unbundled MS extended local dialing parity Port with Caller ID - Res.			UEPSR	UEPAT	1.41	2.39	2.29	1.42	1.33						
	Exchange Ports - 2-Wire VG unbundled res, low usage line port with Caller ID (LUM)			UEPSR	UEPAP	1.41	2.39	2.29	1.42	1.33						
	Exchange Ports - 2-Wire Voice Mississippi Residence Dialing Plan without Caller ID			UEPSR	UEPWJ	1.41	2.39	2.29	1.42	1.33						
	2-Wire voice unbundled Low Usage Line Port without Caller ID Capability			UEPSR	UEPRT	1.41	2.39	2.29	1.42	1.33						
	Subsequent Activity			UEPSR	USASC	0.00	0.00	0.00								
FEATURES																
	All Available Vertical Features			UEPSR	UEPVF	2.56	0.00	0.00								
2-WIRE VOICE GRADE LINE PORT RATES (BUS)																
	Exchange Ports - 2-Wire Analog Line Port without Caller ID - Bus			UEPSB	UEPBL	1.41	2.39	2.29	1.42	1.33						
	Exchange Ports - 2-Wire VG unbundled Line Port with unbundled port with Caller+E484 ID - Bus.			UEPSB	UEPBC	1.41	2.39	2.29	1.42	1.33						
	Exchange Ports - 2-Wire Analog Line Port outgoing only - Bus.			UEPSB	UEPBO	1.41	2.39	2.29	1.42	1.33						
	Exchange Ports - 2-Wire VG unbundled MS extended local dialing parity Port with Caller ID - Bus.			UEPSB	UEPAY	1.41	2.39	2.29	1.42	1.33						
	Exhange Ports - 2-Wire VG unbundled incoming only port with Caller ID - Bus			UEPSB	UEPB1	1.41	2.39	2.29	1.42	1.33						
	Exchange Ports - 2-Wire Voice Mississippi Business Dialing Plan without Caller ID			UEPSB	UEPWK	1.41	2.39	2.29	1.42	1.33						
	2-Wire voice unbundled Incoming Only Port without Caller ID Capability			UEPSB	UEPBE	1.41	2.39	2.29	1.42	1.33						
	Subsequent Activity			UEPSB	USASC	0.00	0.00	0.00								
FEATURES																
	All Available Vertical Features			UEPSB	UEPVF	2.56	0.00	0.00								

UNBUNDLED NETWORK ELEMENTS - Mississippi														Attachment: 2		Exhibit: A	
CATEGORY		RATE ELEMENTS	Interim	Zone	BCS	USOC	RATES ($)					Svc Order Submitted Elec per LSR	Svc Order Submitted Manually per LSR	Incremental Charge - Manual Svc Order vs. Electronic-1st	Incremental Charge - Manual Svc Order vs. Electronic-Add'l	Incremental Charge - Manual Svc Order vs. Electronic-Disc 1st	Incremental Charge - Manual Svc Order vs. Electronic-Disc Add'l
							Rec	Nonrecurring		Nonrecurring Disconnect		OSS Rates ($)					
								First	Add'l	First	Add'l	SOMEC	SOMAN	SOMAN	SOMAN	SOMAN	SOMAN
	EXCHANGE PORT RATES (DID & PBX)																
		2-Wire VG Unbundled 2-Way PBX Trunk - Res			UEPSE	UEPRD	1.41	31.45	14.93	14.38	0.92						
		2-Wire VG Line Side Unbundled 2-Way PBX Trunk - Bus			UEPSP	UEPPC	1.41	31.45	14.93	14.38	0.92						
		2-Wire VG Line Side Unbundled Outward PBX Trunk - Bus			UEPSP	UEPPO	1.41	31.45	14.93	14.38	0.92						
		2-Wire VG Line Side Unbundled Incoming PBX Trunk - Bus			UEPSP	UEPP1	1.41	31.45	14.93	14.38	0.92						
		2-Wire Analog Long Distance Terminal PBX Trunk - Bus			UEPSP	UEPLD	1.41	31.45	14.93	14.38	0.92						
		2-Wire Voice Unbundled PBX LD Terminal Ports			UEPSP	UEPLD	1.41	31.45	14.93	14.38	0.92						
		2-Wire Vice Unbundled 2-Way PBX Usage Port			UEPSP	UEPXA	1.41	31.45	14.93	14.38	0.92						
		2-Wire Voice Unbundled PBX Toll Terminal Hotel Ports			UEPSP	UEPXB	1.41	31.45	14.93	14.38	0.92						
		2-Wire Voice Unbundled PBX LD DDD Terminals Port			UEPSP	UEPXC	1.41	31.45	14.93	14.38	0.92						
		2-Wire Voice Unbundled PBX LD Terminal Switchboard Port			UEPSP	UEPXD	1.41	31.45	14.93	14.38	0.92						
		2-Wire Voice Unbundled PBX LD Terminal Switchboard IDD Capable Port			UEPSP	UEPXE	1.41	31.45	14.93	14.38	0.92						
		2-Wire Voice Unbundled 2-Way PBX Hotel/Hospital Economy Administrative Calling Port			UEPSP	UEPXL	1.41	31.45	14.93	14.38	0.92						
		2-Wire Voice Unbundled 2-Way PBX Hotel/Hospital Economy Room Calling Port			UEPSP	UEPXM	1.41	31.45	14.93	14.38	0.92						
		2-Wire Voice Unbundled 1-Way Outgoing PBX Hotel/Hospital Discount Room Calling Port			UEPSP	UEPXO	1.41	31.45	14.93	14.38	0.92						
		2-Wire Voice Unbundled 2-Way PBX Mississippi Local Economy Calling Port			UEPSP	UEPXQ	1.41	31.45	14.93	14.38	0.92						
		2-Wire Voice Unbundled 2-Way PBX Mississippi Local Optional Calling Port			UEPSP	UEPXR	1.41	31.45	14.93	14.38	0.92						
		2-Wire Voice Unbundled PBX Port, Mississippi only			UEPSP	UEPA5	1.41	31.45	14.93	14.38	0.92						
		2-Wire Voice Unbundled 1-Way Outgoing PBX Measured Port			UEPSP	UEPXS	1.41	31.45	14.93	14.38	0.92						
		Subsequent Activity			UEPSP	USASC	0.00	0.00	0.00								
	FEATURES																
		All Available Vertical Features			UEPSP UEPSE	UEPVF	2.56	0.00	0.00								
	EXCHANGE PORT RATES (COIN)																
		Exchange Ports - Coin Port					1.41	2.39	2.29	1.42	1.33						
	NOTE: Transmission/usage charges associated with POTS circuit switched usage will also apply to circuit switched voice and/or circuit switched data transmission by B-Channels associated with 2-wire ISDN ports.																
	NOTE: Access to B Channel or D Channel Packet capabilities will be available only through BFR/New Business Request Process. Rates for the packet capabilities will be determined via the Bona Fide Request/New Business Request Process.																
UNBUNDLED LOCAL EXCHANGE SWITCHING(PORTS)																	
	EXCHANGE PORT RATES																
	The DS1 Port rates below for 4-Wire DDITS Trunk Port and 4-Wire ISDN Port in this rate exhibit apply to the embedded base in place as of 10/2/03 until 4/1/04. After 4/1/04 these rates shall revert to tariff rates or a separate agreement.																
	Requests for 4-Wire DDITS Trunk Ports with 4-Wire ISDN DS1 Ports after the effective date of this amendment shall be provided pursuant to a separate agreement or tariff at BellSouth's discretion.																
		Exchange Ports - 2-Wire DID Port			UEPEX	UEPP2	8.25	120.00	18.85	61.77	3.88						
		Exchange Ports - DDITS Port - 4-Wire DS1 Port with DID capability (E:4/1/2004)			UEPDD	UEPDD	58.41	203.19	96.25	74.86	2.54						
		Exchange Ports - 2-Wire ISDN Port (See Notes below.)			UEPTX, UEPSX	U1PMA	13.69	73.19	53.30	47.90	10.76						
		All Features Offered			UEPTX, UEPSX	UEPVF	2.56	0.00	0.00								
		Exchange Ports - 2-Wire ISDN Port -- Channel Profiles			UEPTX, UEPSX	U1UMA	0.00	0.00	0.00								
	NOTE: Transmission/usage charges associated with POTS circuit switched usage will also apply to circuit switched voice and/or circuit switched data transmission by B-Channels associated with 2-wire ISDN ports.																
	NOTE: Access to B Channel or D Channel Packet capabilities will be available only through BFR/New Business Request Process. Rates for the packet capabilities will be determined via the Bona Fide Request/New Business Request Process.																
	EXCHANGE PORT RATES (continued)																
		Exchange Ports - 4-Wire ISDN DS1 Port with Detailed E911 Locator Capability (E:4/1/2004)			UEPEX	UEPEX	84.63	205.00	102.14	81.65	20.69						
		Exchange Ports - 4-Wire ISDN DS1 Port (E:4/1/2004)			UEPDX	UEPDX	84.63	205.00	102.14	81.65	20.69						
		Physical Collocation - DS1 Cross-Connects			UEPEX UEPDX	PE1P1	1.14	22.16	16.02	6.60	5.97						
		Virtual Collocation - Special Access & UNE, cross-connect per DS1			UEPEX UEPDX	CNC1X	1.14	22.16	16.02	6.60	5.97						
	Detailed E911 with Locator Capability (required with UEPEX port)																
		Unbundled Exchange Ports, 4-Wire ISDN DS1 Port - E911 Locator Capability - Initial Profile Establishment per CLEC per State			UEPEX	UEP1A	0.00	1,814.00		156.15							
		Unbundled Exchange Ports, 4-Wire ISDN DS1 Port - E911 Locator Capability - Subsequent Profile Changes, Additions, Deletions			UEPEX	UEP1B	0.00	176.15									
	New or Additional PRI Telephone Numbers																

UNBUNDLED NETWORK ELEMENTS - Mississippi													Attachment: 2		Exhibit: A	
CATEGORY	RATE ELEMENTS	Interim	Zone	BCS	USOC	RATES ($)					Svc Order Submitted Elec per LSR	Svc Order Submitted Manually per LSR	Incremental Charge - Manual Svc Order vs. Electronic-1st	Incremental Charge - Manual Svc Order vs. Electronic-Add'l	Incremental Charge - Manual Svc Order vs. Electronic-Disc 1st	Incremental Charge - Manual Svc Order vs. Electronic-Disc Add'l
						Rec	Nonrecurring		Nonrecurring Disconnect		OSS Rates ($)					
							First	Add'l	First	Add'l	SOMEC	SOMAN	SOMAN	SOMAN	SOMAN	SOMAN
	Unbundled Exchange Ports, 4-Wire ISDN DS1 Port - E911 Locator Capability 2-way Telephone Numbers, per number in E911 profile [New or Additional]			UEPEX	UEP1C	0.0701	0.49									
	Unbundled Exchange Ports, 4-Wire ISDN DS1 Port - E911 Locator Capability - Outdial Telephone Numbers, per number in E911 profile [New or Additional]			UEPEX	UEP1D	0.0701	11.58	11.58								
	Unbundled Exchange Ports, 4-Wire ISDN DS1 Port - Inward Telephone Numbers - Inward Data Only Option [New or Additional]			UEPDX	UEP1E	0.00	0.49									
	Exchange Ports - 4-Wire ISDN DS1 Port - Subsequent [New] Inward Tel Numbers [Customer Testing Purposes]			UEPEX	PR7ZT	0.00	23.15	23.15								
LOCAL NUMBER PORTABILITY																
	Local Number Portability (1 per port)			UEPEX UEPDX	LNPCN	1.75										
INTERFACE (Provsioning Only)																
	Voice/Data			UEPEX	PR71V	0.00	0.00	0.00								
	Digital Data			UEPEX	PR71D	0.00	0.00	0.00								
	Inward Data			UEPDX	PR71E	0.00	0.00	0.00								
New or Additional Channel																
	New or Additional - Voice/Data "B" Channel			UEPEX	PR7BV	0.00	14.61									
	New or Additional - Digital Data "B" Channel			UEPEX	PR7BF	0.00	14.61									
	New or Additional Inward Data "B" Channel			UEPDX	PR7BD	0.00	14.61									
	New or Additional Useage Sensitive Voice Data "B" Channel			UEPEX	PR7BS	0.00	14.61									
	New or Additional Useage Sensitive Digital Data "B" Channel			UEPEX	PR7BU	0.00	14.61									
	New or Additional PRI "D" Channel			UEPEX	PR7EX	0.00	14.61									
CALL TYPES																
	Inward			UEPEX UEPDX	PR7C1	0.00	0.00	0.00								
	Outward			UEPEX	PR7CO	0.00	0.00	0.00								
	Two-way			UEPEX	PR7CC	0.00	0.00	0.00								
UNBUNDLED PORT with REMOTE CALL FORWARDING CAPABILITY																
UNBUNDLED REMOTE CALL FORWARDING SERVICE - RESIDENCE																
	Unbundled Remote Call Forwarding Service, Area Calling, Res			UEPVR	UERAC	1.41	2.39	2.29	1.42	1.33						
	Unbundled Remote Call Forwarding Service, Local Calling - Res			UEPVR	UERLC	1.41	2.39	2.29	1.42	1.33						
	Unbundled Remote Call Forwarding Service, InterLATA - Res			UEPVR	UERTE	1.41	2.39	2.29	1.42	1.33						
	Unbundled Remote Call Forwarding Service, IntraLATA - Res			UEPVR	UERTR	1.41	2.39	2.29	1.42	1.33						
Non-Recurring																
	Unbundled Remote Call Forwarding Service - Conversion - Switch-as-is			UEPVR	USAC2		0.0988	0.0988								
	Unbundled Remote Call Forwarding Service - Conversion with allowed change (PIC and LPIC)			UEPVR	USACC		0.0988	0.0988								
UNBUNDLED REMOTE CALL FORWARDING - Bus																
	Unbundled Remote Call Forwarding Service, Area Calling - Bus			UEPVB	UERAC	1.41	2.39	2.29	1.42	1.33						
	Unbundled Remote Call Forwarding Service, Local Calling - Bus			UEPVB	UERLC	1.41	2.39	2.29	1.42	1.33						
	Unbundled Remote Call Forwarding Service, InterLATA - Bus			UEPVB	UERTE	1.41	2.39	2.29	1.42	1.33						
	Unbundled Remote Call Forwarding Service, IntraLATA - Bus			UEPVB	UERTR	1.41	2.39	2.29	1.42	1.33						
	Unbundled Remote Call Forwarding Service Expanded and Exception Local Calling			UEPVB	UERVJ	1.41	2.39	2.29	1.42	1.33						
Non-Recurring																
	Unbundled Remote Call Forwarding Service - Conversion - Switch-as-is			UEPVB	USAC2		0.0988	0.0988								
	Unbundled Remote Call Forwarding Service - Conversion with allowed change (PIC and LPIC)			UEPVB	USACC		0.0988	0.0988								
UNBUNDLED LOCAL SWITCHING, PORT USAGE																
End Office Switching (Port Usage)																
	End Office Switching Function, Per MOU					0.0010269										
	End Office Trunk Port - Shared, Per MOU					0.000161										
Tandem Switching (Port Usage) (Local or Access Tandem)																

UNBUNDLED NETWORK ELEMENTS - Mississippi														Attachment: 2		Exhibit: A	
CATEGORY	RATE ELEMENTS	Interim	Zone	BCS	USOC	RATES ($)					Svc Order Submitted Elec per LSR	Svc Order Submitted Manually per LSR	Incremental Charge - Manual Svc Order vs. Electronic-1st	Incremental Charge - Manual Svc Order vs. Electronic-Add'l	Incremental Charge - Manual Svc Order vs. Electronic-Disc 1st	Incremental Charge - Manual Svc Order vs. Electronic-Disc Add'l
						Rec	Nonrecurring		Nonrecurring Disconnect		OSS Rates ($)					
							First	Add'l	First	Add'l	SOMEC	SOMAN	SOMAN	SOMAN	SOMAN	SOMAN
	Tandem Switching Function Per MOU					0.0001723										
	Tandem Trunk Port - Shared, Per MOU					0.0001828										
	Tandem Switching Function Per MOU (Melded)					0.000063441										
	Tandem Trunk Port - Shared, Per MOU (Melded)					0.000067307										
	Melded Factor: 36.82% of the Tandem Rate															
	Common Transport															
	Common Transport - Per Mile, Per MOU					0.0000026										
	Common Transport - Facilities Termination Per MOU					0.0004541										
UNBUNDLED PORT/LOOP COMBINATIONS - COST BASED RATES																
	Cost Based Rates are applied where BellSouth is required by FCC and/or State Commission rule to provide Unbundled Local Switching or Switch Ports.															
	Features shall apply to the Unbundled Port/Loop Combination - Cost Based Rate section in the same manner as they are applied to the Stand-Alone Unbundled Port section of this Rate Exhibit.															
	End Office and Tandem Switching Usage and Common Transport Usage rates in the Port section of this rate exhibit shall apply to all combinations of loop/port network elements except for UNE Coin Port/Loop Combinations.															
	The first and additional Port nonrecurring charges apply to Not Currently Combined Combos. For Currently Combined Combos the nonrecurring charges shall be those identified in the Nonrecurring - Currently Combined sections.															
	2-WIRE VOICE GRADE LOOP WITH 2-WIRE LINE PORT (RES)															
	UNE Port/Loop Combination Rates															
	2-Wire VG Loop/Port Combo - Zone 1		1			12.22										
	2-Wire VG Loop/Port Combo - Zone 2		2			17.13										
	2-Wire VG Loop/Port Combo - Zone 3		3			26.26										
	2-Wire VG Loop/Port Combo - Zone 4		4			44.91										
	UNE Loop Rates															
	2-Wire Voice Grade Loop (SL1) - Zone 1		1	UEPRX	UEPLX	10.98										
	2-Wire Voice Grade Loop (SL1) - Zone 2		2	UEPRX	UEPLX	15.91										
	2-Wire Voice Grade Loop (SL1) - Zone 3		3	UEPRX	UEPLX	25.04										
	2-Wire Voice Grade Loop (SL1) - Zone 4		4	UEPRX	UEPLX	43.68										
	2-Wire Voice Grade Line Port Rates (Res)															
	2-Wire voice unbundled port - residence			UEPRX	UEPRL	1.23	40.31	19.84	24.90	6.58						
	2-Wire voice unbundled port with Caller ID - res			UEPRX	UEPRC	1.23	40.31	19.84	24.90	6.58						
	2-Wire voice unbundled port outgoing only - res			UEPRX	UEPRO	1.23	40.31	19.84	24.90	6.58						
	2-Wire voice Grade unbundled Mississippi extended local dialing parity port with Caller ID - res			UEPRX	UEPAT	1.23	40.31	19.84	24.90	6.58						
	2-Wire voice unbundles res, low usage line port with Caller ID (LUM)			UEPRX	UEPAP	1.23	40.31	19.84	24.90	6.58						
	2-Wire Voice Unbundled Mississippi Residence Dialing Plan without Caller ID			UEPRX	UEPWJ	1.23	40.31	19.84	24.90	6.58						
	2-Wire voice unbundled Low Usage Line Port without Caller ID Capability			UEPRX	UEPRT	1.23	40.31	19.84	24.90	6.58						
	FEATURES															
	All Features Offered			UEPRX	UEPVF	2.56	0.00	0.00								
	LOCAL NUMBER PORTABILITY															
	Local Number Portability (1 per port)			UEPRX	LNPCX	0.35										
	NONRECURRING CHARGES (NRCs) - CURRENTLY COMBINED															
	2-Wire Voice Grade Loop / Line Port Combination - Conversion - Switch-as-is			UEPRX	USAC2		0.0988	0.0988								
	2-Wire Voice Grade Loop / Line Port Combination - Conversion - Switch with change			UEPRX	USACC		0.0988	0.0988								
	2-Wire Voice Grade Loop / Line Port Combination - Conversion - Subsequent Database Update						0.00	0.00								
	ADDITIONAL NRCs															
	2-Wire Voice Grade Loop/Line Port Combination - Subsequent Activity			UEPRX	USAS2	0.00	0.00	0.00								
	Unbundled Miscellaneous Rate Element, Tag Loop at End User Premise			UEPRX	URETL		8.33	0.83								
	OFF/ON PREMISES EXTENSION CHANNELS															
	2 Wire Analog Voice Grade Extension Loop – Non-Design		1	UEPRX	UEAEN	12.03	37.92	17.55	23.48	5.25						
	2 Wire Analog Voice Grade Extension Loop – Non-Design		2	UEPRX	UEAEN	16.87	37.92	17.55	23.48	5.25						
	2 Wire Analog Voice Grade Extension Loop – Non-Design		3	UEPRX	UEAEN	25.68	37.92	17.55	23.48	5.25						
	2 Wire Analog Voice Grade Extension Loop – Non-Design		4	UEPRX	UEAEN	43.85	37.92	17.55	23.48	5.25						
	2 Wire Analog Voice Grade Extension Loop – Design		1	UEPRX	UEAED	13.89	105.96	68.28	52.82	10.37						
	2 Wire Analog Voice Grade Extension Loop – Design		2	UEPRX	UEAED	18.75	105.96	68.28	52.82	10.37						

UNBUNDLED NETWORK ELEMENTS - Mississippi													Attachment: 2		Exhibit: A	
CATEGORY	RATE ELEMENTS	Interim	Zone	BCS	USOC	RATES ($)					Svc Order Submitted Elec per LSR	Svc Order Submitted Manually per LSR	Incremental Charge - Manual Svc Order vs. Electronic-1st	Incremental Charge - Manual Svc Order vs. Electronic-Add'l	Incremental Charge - Manual Svc Order vs. Electronic-Disc 1st	Incremental Charge - Manual Svc Order vs. Electronic-Disc Add'l
						Rec	Nonrecurring		Nonrecurring Disconnect		OSS Rates ($)					
							First	Add'l	First	Add'l	SOMEC	SOMAN	SOMAN	SOMAN	SOMAN	SOMAN
	2 Wire Analog Voice Grade Extension Loop – Design		3	UEPRX	UEAED	27.55	105.96	68.28	52.82	10.37						
	2 Wire Analog Voice Grade Extension Loop – Design		4	UEPRX	UEAED	45.72	105.96	68.28	52.82	10.37						
INTEROFFICE TRANSPORT																
	Interoffice Transport - Dedicated - 2 Wire Voice Grade - Facility Termination			UEPRX	U1TV2	20.32	40.77	27.57	17.26	7.11						
	Interoffice Transport - Dedicated - 2 Wire Voice Grade - Per Mile or Fraction Mile			UEPRX	U1TVM	0.0088	0.00	0.00								
2-WIRE VOICE GRADE LOOP WITH 2-WIRE LINE PORT (BUS)																
UNE Port/Loop Combination Rates																
	2-Wire VG Loop/Port Combo - Zone 1		1			12.22										
	2-Wire VG Loop/Port Combo - Zone 2		2			17.13										
	2-Wire VG Loop/Port Combo - Zone 3		3			26.26										
UNE Loop Rates																
	2-Wire Voice Grade Loop (SL1) - Zone 1		1	UEPBX	UEPLX	10.98										
	2-Wire Voice Grade Loop (SL1) - Zone 2		2	UEPBX	UEPLX	15.91										
	2-Wire Voice Grade Loop (SL1) - Zone 3		3	UEPBX	UEPLX	25.04										
	2-Wire Voice Grade Loop (SL1) - Zone 4		4	UEPBX	UEPLX	43.68										
2-Wire Voice Grade Line Port (Bus)																
	2-Wire voice unbundled port without Caller ID - bus			UEPBX	UEPBL	1.23	40.31	19.84	24.90	6.58						
	2-Wire voice unbundled port with Caller + E484 ID - bus			UEPBX	UEPBC	1.23	40.31	19.84	24.90	6.58						
	2-Wire voice unbundled port outgoing only - bus			UEPBX	UEPBO	1.23	40.31	19.84	24.90	6.58						
	2-Wire voice Grade unbundled Mississippi extended local dialing parity port with Caller ID - bus			UEPBX	UEPAY	1.23	40.31	19.84	24.90	6.58						
	2-Wire voice unbundled incoming only port with Caller ID - Bus			UEPBX	UEPB1	1.23	40.31	19.84	24.90	6.58						
	2-Wire Voice Unbundled Mississippi Business Dialing Plan without Caller ID			UEPBX	UEPWK	1.23	40.31	19.84	24.90	6.58						
	2-Wire voice unbundled Incoming Only Port without Caller ID Capability			UEPBX	UEPBE	1.23	40.31	19.84	24.90	6.58						
LOCAL NUMBER PORTABILITY																
	Local Number Portability (1 per port)			UEPBX	LNPCX	0.35										
FEATURES																
	All Features Offered			UEPBX	UEPVF	2.56	0.00	0.00								
NONRECURRING CHARGES (NRCs) - CURRENTLY COMBINED																
	2-Wire Voice Grade Loop / Line Port Combination - Conversion - Switch-as-is			UEPBX	USAC2		0.0988	0.0988								
	2-Wire Voice Grade Loop / Line Port Combination - Conversion - Switch with change			UEPBX	USACC		0.0988	0.0988								
	2-Wire Voice Grade Loop / Line Port Combination - Conversion - Subsequent Database Update						0.00	0.00								
ADDITIONAL NRCs																
	2-Wire Voice Grade Loop/Line Port Combination - Subsequent Activity			UEPBX	USAS2		0.00	0.00								
	Unbundled Miscellaneous Rate Element, Tag Loop at End User Premise			UEPBX	URETL		8.33	0.83								
OFF/ON PREMISES EXTENSION CHANNELS																
	2 Wire Analog Voice Grade Extension Loop – Non-Design		1	UEPBX	UEAEN	12.03	37.92	17.55	23.48	5.25						
	2 Wire Analog Voice Grade Extension Loop – Non-Design		2	UEPBX	UEAEN	16.87	37.92	17.55	23.48	5.25						
	2 Wire Analog Voice Grade Extension Loop – Non-Design		3	UEPBX	UEAEN	25.68	37.92	17.55	23.48	5.25						
	2 Wire Analog Voice Grade Extension Loop – Non-Design		4	UEPBX	UEAEN	43.85	37.92	17.55	23.48	5.25						
	2 Wire Analog Voice Grade Extension Loop – Design		1	UEPBX	UEAED	13.89	105.96	68.28	52.82	10.37						
	2 Wire Analog Voice Grade Extension Loop – Design		2	UEPBX	UEAED	18.75	105.96	68.28	52.82	10.37						
	2 Wire Analog Voice Grade Extension Loop – Design		3	UEPBX	UEAED	27.55	105.96	68.28	52.82	10.37						
	2 Wire Analog Voice Grade Extension Loop – Design		4	UEPBX	UEAED	45.72	105.96	68.28	52.82	10.37						
INTEROFFICE TRANSPORT																
	Interoffice Transport - Dedicated - 2 Wire Voice Grade - Facility Termination			UEPBX	U1TV2	20.32	40.77	27.57	17.26	7.11						
	Interoffice Transport - Dedicated - 2 Wire Voice Grade - Per Mile or Fraction Mile			UEPBX	U1TVM	0.0088	0.00	0.00								
2-WIRE VOICE GRADE LOOP WITH 2-WIRE LINE PORT (RES - PBX)																

UNBUNDLED NETWORK ELEMENTS - Mississippi														Attachment: 2		Exhibit: A	
CATEGORY	RATE ELEMENTS	Interim	Zone	BCS	USOC	RATES ($)					Svc Order Submitted Elec per LSR	Svc Order Submitted Manually per LSR	Incremental Charge - Manual Svc Order vs. Electronic-1st	Incremental Charge - Manual Svc Order vs. Electronic-Add'l	Incremental Charge - Manual Svc Order vs. Electronic-Disc 1st	Incremental Charge - Manual Svc Order vs. Electronic-Disc Add'l
						Rec	Nonrecurring		Nonrecurring Disconnect		OSS Rates ($)					
							First	Add'l	First	Add'l	SOMEC	SOMAN	SOMAN	SOMAN	SOMAN	SOMAN
UNE Port/Loop Combination Rates																
	2-Wire VG Loop/Port Combo - Zone 1		1			12.22										
	2-Wire VG Loop/Port Combo - Zone 2		2			17.13										
	2-Wire VG Loop/Port Combo - Zone 3		3			26.26										
	2-Wire VG Loop/Port Combo - Zone 4		4			44.91										
UNE Loop Rates																
	2-Wire Voice Grade Loop (SL 1) - Zone 1		1	UEPRG	UEPLX	10.98										
	2-Wire Voice Grade Loop (SL 1) - Zone 2		2	UEPRG	UEPLX	15.91										
	2-Wire Voice Grade Loop (SL 1) - Zone 3		3	UEPRG	UEPLX	25.04										
	2-Wire Voice Grade Loop (SL 1) - Zone 4		4	UEPRG	UEPLX	43.68										
2-Wire Voice Grade Line Port Rates (RES - PBX)																
	2-Wire VG Unbundled Combination 2-Way PBX Trunk Port - Res			UEPRG	UEPRD	1.23	69.37	32.48	37.86	6.17						
LOCAL NUMBER PORTABILITY																
	Local Number Portability (1 per port)			UEPRG	LNPCP	3.15	0.00	0.00								
FEATURES																
	All Features Offered			UEPRG	UEPVF	2.56	0.00	0.00								
NONRECURRING CHARGES (NRCs) - CURRENTLY COMBINED																
	2-Wire Voice Grade Loop/ Line Port Combination (PBX) - Conversion - Switch-As-Is			UEPRG	USAC2		7.96	1.91								
	2-Wire Voice Grade Loop/ Line Port Combination (PBX) - Conversion - Switch with Change			UEPRG	USACC		7.96	1.91								
	2-Wire Voice Grade Loop / Line Port Combination - Conversion - Subsequent Database Update						0.00	0.00								
ADDITIONAL NRCs																
	2-Wire Voice Grade Loop/ Line Port Combination (PBX) - Subsequent Activity			UEPRG	USAS2	0.00	0.00	0.00								
	PBX Subsequent Activity - Change/Rearrange Multiline Hunt Group						7.36	7.36								
	Unbundled Miscellaneous Rate Element, Tag Loop at End User Premise			UEPRG	URETL		8.33	0.83								
OFF/ON PREMISES EXTENSION CHANNELS																
	Local Channel Voice grade, per termination		1	UEPRG	P2JHX	13.89	105.96	68.28	52.82	10.37						
	Local Channel Voice grade, per termination		2	UEPRG	P2JHX	18.75	105.96	68.28	52.82	10.37						
	Local Channel Voice grade, per termination		3	UEPRG	P2JHX	27.55	105.96	68.28	52.82	10.37						
	Local Channel Voice grade, per termination		4	UEPRG	P2JHX	45.72	105.96	68.28	52.82	10.37						
INTEROFFICE TRANSPORT																
	Interoffice Transport - Dedicated - 2 Wire Voice Grade - Facility Termination			UEPRG	U1TV2	20.32	40.77	27.57	17.26	7.11						
	Interoffice Transport - Dedicated - 2 Wire Voice Grade - Per Mile or Fraction Mile			UEPRG	U1TVM	0.0088	0.00	0.00								
2-WIRE VOICE GRADE LOOP WITH 2-WIRE LINE PORT (BUS - PBX)																
UNE Port/Loop Combination Rates																
	2-Wire VG Loop/Port Combo - Zone 1		1			12.22										
	2-Wire VG Loop/Port Combo - Zone 2		2			17.13										
	2-Wire VG Loop/Port Combo - Zone 3		3			26.26										
	2-Wire VG Loop/Port Combo - Zone 4		4			44.91										
UNE Loop Rates																
	2-Wire Voice Grade Loop (SL 1) - Zone 1		1	UEPPX	UEPLX	10.98										
	2-Wire Voice Grade Loop (SL 1) - Zone 2		2	UEPPX	UEPLX	15.91										
	2-Wire Voice Grade Loop (SL 1) - Zone 3		3	UEPPX	UEPLX	25.04										
	2-Wire Voice Grade Loop (SL 1) - Zone 4		4	UEPPX	UEPLX	43.68										
2-Wire Voice Grade Line Port Rates (BUS - PBX)																
	Line Side Unbundled Combination 2-Way PBX Trunk Port - Bus			UEPPX	UEPPC	1.23	69.37	32.48	37.86	6.17						
	Line Side Unbundled Outward PBX Trunk Port - Bus			UEPPX	UEPPO	1.23	69.37	32.48	37.86	6.17						
	Line Side Unbundled Incoming PBX Trunk Port - Bus			UEPPX	UEPP1	1.23	69.37	32.48	37.86	6.17						
	2-Wire Voice Unbundled PBX LD Terminal Ports			UEPPX	UEPLD	1.23	69.37	32.48	37.86	6.17						
	2-Wire Voice Unbundled 2-Way Combination PBX Usage Port			UEPPX	UEPXA	1.23	69.37	32.48	37.86	6.17						

UNBUNDLED NETWORK ELEMENTS - Mississippi														Attachment: 2		Exhibit: A	
CATEGORY	RATE ELEMENTS	Interim	Zone	BCS	USOC	RATES ($)					Svc Order Submitted Elec per LSR	Svc Order Submitted Manually per LSR	Incremental Charge - Manual Svc Order vs. Electronic-1st	Incremental Charge - Manual Svc Order vs. Electronic-Add'l	Incremental Charge - Manual Svc Order vs. Electronic-Disc 1st	Incremental Charge - Manual Svc Order vs. Electronic-Disc Add'l
						Rec	Nonrecurring		Nonrecurring Disconnect		OSS Rates ($)					
							First	Add'l	First	Add'l	SOMEC	SOMAN	SOMAN	SOMAN	SOMAN	SOMAN
	2-Wire Voice Unbundled PBX Toll Terminal Hotel Ports			UEPPX	UEPXB	1.23	69.37	32.48	37.86	6.17						
	2-Wire Voice Unbundled PBX LD DDD Terminals Port			UEPPX	UEPXC	1.23	69.37	32.48	37.86	6.17						
	2-Wire Voice Unbundled PBX LD Terminal Switchboard Port			UEPPX	UEPXD	1.23	69.37	32.48	37.86	6.17						
	2-Wire Voice Unbundled PBX LD Terminal Switchboard IDD Capable Port			UEPPX	UEPXE	1.23	69.37	32.48	37.86	6.17						
	2-Wire Voice Unbundled 2-Way PBX Hotel/Hospital Economy Administrative Calling Port			UEPPX	UEPXL	1.23	69.37	32.48	37.86	6.17						
	2-Wire Voice Unbundled 2-Way PBX Hotel/Hospital Economy Room Calling Port			UEPPX	UEPXM	1.23	69.37	32.48	37.86	6.17						
	2-Wire Voice Unbundled 1-Way Outgoing PBX Hotel/Hospital Discount Room Calling Port			UEPPX	UEPXO	1.23	69.37	32.48	37.86	6.17						
	2-Wire Voice Unbundled 2-Way PBX Mississippi Local Economy Calling Port			UEPPX	UEPXQ	1.23	69.37	32.48	37.86	6.17						
	2-Wire Voice Unbundled 2-Way PBX Mississippi Local Optional Calling Port			UEPPX	UEPXR	1.23	69.37	32.48	37.86	6.17						
	2-Wire Voice Unbundled 1-Way Outgoing PBX Measured Port			UEPPX	UEPXS	1.23	69.37	32.48	37.86	6.17						
	Mississippi PBX 2-Way Combo Local Opt 2 Calling Port			UEPPX	UEPA5	1.23	69.37	32.48	37.86	6.17						
LOCAL NUMBER PORTABILITY																
	Local Number Portability (1 per port)			UEPPX	LNPCP	3.15	0.00	0.00								
FEATURES																
	All Features Offered			UEPPX	UEPVF	2.56	0.00	0.00								
NONRECURRING CHARGES (NRCs) - CURRENTLY COMBINED																
	2-Wire Voice Grade Loop/ Line Port Combination (PBX) - Conversion - Switch-As-Is			UEPPX	USAC2		7.96	1.91								
	2-Wire Voice Grade Loop/ Line Port Combination (PBX) - Conversion - Switch with Change			UEPPX	USACC		7.96	1.91								
	2-Wire Voice Grade Loop / Line Port Combination - Conversion - Subsequent Database Update						0.00	0.00								
ADDITIONAL NRCs																
	2-Wire Voice Grade Loop/ Line Port Combination (PBX) - Subsequent Activity			UEPPX	USAS2	0.00	0.00	0.00								
	PBX Subsequent Activity - Change/Rearrange Multiline Hunt Group						7.36	7.36								
	Unbundled Miscellaneous Rate Element, Tag Loop at End User Premise			UEPPX	URETL		8.33	0.83								
OFF/ON PREMISES EXTENSION CHANNELS																
	Local Channel Voice grade, per termination		1	UEPPX	P2JHX	13.89	105.96	68.28	52.82	10.37						
	Local Channel Voice grade, per termination		2	UEPPX	P2JHX	18.75	105.96	68.28	52.82	10.37						
	Local Channel Voice grade, per termination		3	UEPPX	P2JHX	27.55	105.96	68.28	52.82	10.37						
	Local Channel Voice grade, per termination		4	UEPPX	P2JHX	45.72	105.96	68.28	52.82	10.37						
INTEROFFICE TRANSPORT																
	Interoffice Transport - Dedicated - 2 Wire Voice Grade - Facility Termination			UEPPX	U1TV2	20.32	40.77	27.57	17.26	7.11						
	Interoffice Transport - Dedicated - 2 Wire Voice Grade - Per Mile or Fraction Mile			UEPPX	U1TVM	0.0088	0.00	0.00								
2-WIRE VOICE GRADE LOOP WITH 2-WIRE ANALOG LINE COIN PORT																
UNE Port/Loop Combination Rates																
	2-Wire VG Coin Port/Loop Combo – Zone 1		1			12.22										
	2-Wire VG Coin Port/Loop Combo – Zone 2		2			17.13										
	2-Wire VG Coin Port/Loop Combo – Zone 3		3			26.26										
	2-Wire VG Coin Port/Loop Combo – Zone 4		4			44.91										
UNE Loop Rates																
	2-Wire Voice Grade Loop (SL1) - Zone 1		1	UEPCO	UEPLX	10.98										
	2-Wire Voice Grade Loop (SL1) - Zone 2		2	UEPCO	UEPLX	15.91										
	2-Wire Voice Grade Loop (SL1) - Zone 3		3	UEPCO	UEPLX	25.04										
	2-Wire Voice Grade Loop (SL1) - Zone 4		4	UEPCO	UEPLX	43.68										
2-Wire Voice Grade Line Ports (COIN)																
	2-Wire Coin 2-Way without Operator Screening and without Blocking (AL, KY, LA, MS)			UEPCO	UEPRF	1.23	40.31	19.84	24.90	6.58						

UNBUNDLED NETWORK ELEMENTS - Mississippi														Attachment: 2		Exhibit: A	
CATEGORY		RATE ELEMENTS	Interim	Zone	BCS	USOC	RATES ($)					Svc Order Submitted Elec per LSR	Svc Order Submitted Manually per LSR	Incremental Charge - Manual Svc Order vs. Electronic-1st	Incremental Charge - Manual Svc Order vs. Electronic-Add'l	Incremental Charge - Manual Svc Order vs. Electronic-Disc 1st	Incremental Charge - Manual Svc Order vs. Electronic-Disc Add'l
							Rec	Nonrecurring		Nonrecurring Disconnect		OSS Rates ($)					
								First	Add'l	First	Add'l	SOMEC	SOMAN	SOMAN	SOMAN	SOMAN	SOMAN
		2-Wire Coin 2-Way without Operator Screening and without Blocking; with Dialing Parity (Note 3) (MS)			UEPCO	UEPMC	1.23	40.31	19.84	24.90	6.58						
		2-Wire Coin 2-Way with Operator Screening and Blocking: 011, 900/976, 1+DDD (AL, KY, LA, MS)			UEPCO	UEPRA	1.23	40.31	19.84	24.90	6.58						
		2-Wire Coin 2-W with Operator Screening and Blocking: 011, 900/976, 1+DDD; with Dialing Parity (MS)			UEPCO	UEPMA	1.23	40.31	19.84	24.90	6.58						
		2-Wire Coin 2-Way with Operator Screening and 011 Blocking (AL, LA, MS)			UEPCO	UEPRB	1.23	40.31	19.84	24.90	6.58						
		2-Wire Coin 2-Way with Operator Screening and 011 Blocking; with Dialing Parity (MS)			UEPCO	UEPMB	1.23	40.31	19.84	24.90	6.58						
		2-Wire Coin 2-Way with Operator Screening & Blocking: 900/976, 1+DDD, 011+, & Local (AL, KY, LA, MS)			UEPCO	UEPCD	1.23	40.31	19.84	24.90	6.58						
		2-Wire Coin 2-W Operator Screening: 900 Block: 900/976, 1+DDD, 011+, Local; with Dialing Parity (MS)			UEPCO	UEPCJ	1.23	40.31	19.84	24.90	6.58						
		2-Wire Coin Outward without Blocking and without Operator Screening (KY, LA, MS)			UEPCO	UEPRN	1.23	40.31	19.84	24.90	6.58						
		2-Wire Coin Outward without Blocking and without Operator Screening; With Dailing Parity (MS)			UEPCO	UEPME	1.23	40.31	19.84	24.90	6.58						
		2-Wire Coin Outward with Operator Screening and 011 Blocking (GA, KY, MS)			UEPCO	UEPRJ	1.23	40.31	19.84	24.90	6.58						
		2-Wire Coin Outward with Operator Screening and 011 Blocking; with Dialing Parity (MS)			UEPCO	UEPMD	1.23	40.31	19.84	24.90	6.58						
		2-Wire Coin Outward with Operator Screening and Blocking: 011, 900/976, 1+DDD (AL, KY, LA, MS)			UEPCO	UEPRH	1.23	40.31	19.84	24.90	6.58						
		2-Wire Coin Outward Operator Screening & Blocking: 900/976, 1+DDD, 011+, and Local (AL, KY, LA, MS)			UEPCO	UEPCN	1.23	40.31	19.84	24.90	6.58						
		2-Wire Coin Out Operator Screen & Block: 900/976, 1+DDD, 011+, and Local; with Dialing Parity (MS)			UEPCO	UEPCS	1.23	40.31	19.84	24.90	6.58						
		2-Wire 2-Way Smartline with 900/976 (all states except LA)			UEPCO	UEPCK	1.23	40.31	19.84	24.90	6.58						
		2-Wire Coin Outward Smartline with 900/976 (all states except LA)			UEPCO	UEPCR	1.23	40.31	19.84	24.90	6.58						
	ADDITIONAL UNE COIN PORT/LOOP (RC)																
		UNE Coin Port/Loop Combo Usage (Flat Rate)			UEPCO	URECU	4.62	0.00	0.00	0.00	0.00						
	LOCAL NUMBER PORTABILITY																
		Local Number Portability (1 per port)			UEPCO	LNPCX	0.35										
	NONRECURRING CHARGES - CURRENTLY COMBINED																
		2-Wire Voice Grade Loop / Line Port Combination - Conversion - Switch-as-is			UEPCO	USAC2		0.0988	0.0988								
		2-Wire Voice Grade Loop / Line Port Combination - Conversion - Switch with change			UEPCO	USACC		0.0988	0.0988								
	ADDITIONAL NRCs																
		2-Wire Voice Grade Loop/Line Port Combination - Subsequent Activity			UEPCO	USAS2		0.00	0.00								
		Unbundled Miscellaneous Rate Element, Tag Loop at End User Premise			UEPCO	URETL		8.33	0.83								
	2-WIRE VOICE LOOP/ 2WIRE VOICE GRADE IO TRANSPORT/ 2-WIRE LINE PORT (RES)																
	UNE Port/Loop Combination Rates																
		2-Wire VG Loop/IO Tranport/Port Combo - Zone 1		1			15.16										
		2-Wire VG Loop/IO Tranport/Port Combo - Zone 2		2			20.02										
		2-Wire VG Loop/IO Tranport/Port Combo - Zone 3		3			28.82										
		2-Wire VG Loop/IO Tranport/Port Combo - Zone 4		4			46.99										
	UNE Loop Rates																
		2-Wire Voice Grade Loop (SL2) - Zone 1		1	UEPFR	UECF2	13.89										
		2-Wire Voice Grade Loop (SL2) - Zone 2		2	UEPFR	UECF2	18.75										
		2-Wire Voice Grade Loop (SL2) - Zone 3		3	UEPFR	UECF2	27.55										
		2-Wire Voice Grade Loop (SL2) - Zone 4		4	UEPFR	UECF2	45.72										
	2-Wire Voice Grade Line Port Rates (Res)																
		2-Wire voice unbundled port - residence			UEPFR	UEPRL	1.27	108.35	70.57	54.24	11.70						
		2-Wire voice unbundled port with Caller ID - res			UEPFR	UEPRC	1.27	108.35	70.57	54.24	11.70						

UNBUNDLED NETWORK ELEMENTS - Mississippi														Attachment: 2		Exhibit: A	
CATEGORY		RATE ELEMENTS	Interim	Zone	BCS	USOC	RATES ($)					Svc Order Submitted Elec per LSR	Svc Order Submitted Manually per LSR	Incremental Charge - Manual Svc Order vs. Electronic-1st	Incremental Charge - Manual Svc Order vs. Electronic-Add'l	Incremental Charge - Manual Svc Order vs. Electronic-Disc 1st	Incremental Charge - Manual Svc Order vs. Electronic-Disc Add'l
							Rec	Nonrecurring		Nonrecurring Disconnect		OSS Rates ($)					
								First	Add'l	First	Add'l	SOMEC	SOMAN	SOMAN	SOMAN	SOMAN	SOMAN
		2-Wire voice unbundled port outgoing only - res			UEPFR	UEPRO	1.27	108.35	70.57	54.24	11.70						
		2-Wire voice Grade unbundled Mississippi extended local dialing parity port with Caller ID - res			UEPFR	UEPAT	1.27	108.35	70.57	54.24	11.70						
		2-Wire voice unbundles res, low usage line port with Caller ID (LUM)			UEPFR	UEPAP	1.27	108.35	70.57	54.24	11.70						
		2-Wire Voice Unbundled Mississippi Residence Dialing Plan without Caller ID			UEPFR	UEPWJ	1.27	108.35	70.57	54.24	11.70						
	INTEROFFICE TRANSPORT																
		Interoffice Transport - Dedicated - 2 Wire Voice Grade - Facility Termination			UEPFR	U1TV2	20.32	40.77	27.57	17.26	7.11						
		Interoffice Transport - Dedicated - 2 Wire Voice Grade - Per Mile or Fraction Mile			UEPFR	1L5XX	0.0088										
	FEATURES																
		All Features Offered			UEPFR	UEPVF	2.56	0.00	0.00								
	LOCAL NUMBER PORTABILITY																
		Local Number Portability (1 per port)			UEPFR	LNPCX	0.35										
	NONRECURRING CHARGES (NRCs) - CURRENTLY COMBINED																
		2-Wire Loop / Dedicated IO Transport / 2 Wire Line Port Combination - Conversion - Switch-as-is			UEPFR	USAC2		16.94	3.72								
		2-Wire Loop / Dedicated IO Transport / 2 Wire Line Port Combination - Conversion - Switch-With-Change			UEPFR	USACC		16.94	3.72								
		Unbundled Miscellaneous Rate Element, Tag Designed Loop at End User Premise			UEPFR	URETN		11.19	1.10								
	2-WIRE VOICE LOOP/ 2WIRE VOICE GRADE IO TRANSPORT/ 2-WIRE LINE PORT (BUS)																
	UNE Port/Loop Combination Rates																
		2-Wire VG Loop/IO Tranport/Port Combo - Zone 1		1			15.16										
		2-Wire VG Loop/IO Tranport/Port Combo - Zone 2		2			20.02										
		2-Wire VG Loop/IO Tranport/Port Combo - Zone 3		3			28.82										
		2-Wire VG Loop/IO Tranport/Port Combo - Zone 4		4			46.99										
	UNE Loop Rates																
		2-Wire Voice Grade Loop (SL2) - Zone 1		1	UEPFB	UECF2	13.89										
		2-Wire Voice Grade Loop (SL2) - Zone 2		2	UEPFB	UECF2	18.75										
		2-Wire Voice Grade Loop (SL2) - Zone 3		3	UEPFB	UECF2	27.55										
		2-Wire Voice Grade Loop (SL2) - Zone 4		4	UEPFB	UECF2	45.72										
	2-Wire Voice Grade Line Port (Bus)																
		2-Wire voice unbundled port without Caller ID - bus			UEPFB	UEPBL	1.27	108.35	70.57	54.24	11.70						
		2-Wire voice unbundled port with Caller + E484 ID - bus			UEPFB	UEPBC	1.27	108.35	70.57	54.24	11.70						
		2-Wire voice unbundled port outgoing only - bus			UEPFB	UEPBO	1.27	108.35	70.57	54.24	11.70						
		2-Wire voice Grade unbundled Mississippi extended local dialing parity port with Caller ID - bus			UEPFB	UEPAY	1.27	108.35	70.57	54.24	11.70						
		2-Wire voice unbundled incoming only port with Caller ID - Bus			UEPFB	UEPB1	1.27	108.35	70.57	54.24	11.70						
		2-Wire Voice Unbundled Mississippi Business Dialing Plan without Caller ID			UEPFB	UEPWK	1.27	108.35	70.57	54.24	11.70						
	LOCAL NUMBER PORTABILITY																
		Local Number Portability (1 per port)			UEPFB	LNPCX	0.35										
	INTEROFFICE TRANSPORT																
		Interoffice Transport - Dedicated - 2 Wire Voice Grade - Facility Termination			UEPFB	U1TV2	20.32	40.77	27.57	17.26	7.11						
		Interoffice Transport - Dedicated - 2 Wire Voice Grade - Per Mile or Fraction Mile			UEPFB	1L5XX	0.0088										
	FEATURES																
		All Features Offered			UEPFB	UEPVF	2.56	0.00	0.00								
	NONRECURRING CHARGES (NRCs) - CURRENTLY COMBINED																
		2-Wire Loop / Dedicated IO Transport / 2 Wire Line Port Combination - Conversion - Switch-as-is			UEPFB	USAC2		16.94	3.72								
		2-Wire Loop / Dedicated IO Transport / 2 Wire Line Port Combination - Conversion - Switch with change			UEPFB	USACC		16.94	3.72								
		Unbundled Miscellaneous Rate Element, Tag Designed Loop at End User Premise			UEPFB	URETN		11.19	1.10								

UNBUNDLED NETWORK ELEMENTS - Mississippi													Attachment: 2		Exhibit: A	
CATEGORY	RATE ELEMENTS	Interim	Zone	BCS	USOC	RATES ($)					Svc Order Submitted Elec per LSR	Svc Order Submitted Manually per LSR	Incremental Charge - Manual Svc Order vs. Electronic-1st	Incremental Charge - Manual Svc Order vs. Electronic-Add'l	Incremental Charge - Manual Svc Order vs. Electronic-Disc 1st	Incremental Charge - Manual Svc Order vs. Electronic-Disc Add'l
						Rec	Nonrecurring		Nonrecurring Disconnect		OSS Rates ($)					
							First	Add'l	First	Add'l	SOMEC	SOMAN	SOMAN	SOMAN	SOMAN	SOMAN
2-WIRE VOICE LOOP/ 2WIRE VOICE GRADE IO TRANSPORT/ 2-WIRE LINE PORT (PBX)																
UNE Port/Loop Combination Rates																
	2-Wire VG Loop/IO Tranport/Port Combo - Zone 1		1			15.16										
	2-Wire VG Loop/IO Tranport/Port Combo - Zone 2		2			20.02										
	2-Wire VG Loop/IO Tranport/Port Combo - Zone 3		3			28.82										
	2-Wire VG Loop/IO Tranport/Port Combo - Zone 4		4			46.99										
UNE Loop Rates																
	2-Wire Voice Grade Loop (SL2) - Zone 1		1	UEPFP	UECF2	13.89										
	2-Wire Voice Grade Loop (SL2) - Zone 2		2	UEPFP	UECF2	18.75										
	2-Wire Voice Grade Loop (SL2) - Zone 3		3	UEPFP	UECF2	27.55										
	2-Wire Voice Grade Loop (SL2) - Zone 4		4	UEPFP	UECF2	45.72										
2-Wire Voice Grade Line Port Rates (BUS - PBX)																
	Line Side Unbundled Combination 2-Way PBX Trunk Port - Bus			UEPFP	UEPPC	1.27	137.41	80.14	67.20	11.29						
	Line Side Unbundled Outward PBX Trunk Port - Bus			UEPFP	UEPPO	1.27	137.41	80.14	67.20	11.29						
	Line Side Unbundled Incoming PBX Trunk Port - Bus			UEPFP	UEPP1	1.27	137.41	80.14	67.20	11.29						
	2-Wire Voice Unbundled PBX LD Terminal Ports			UEPFP	UEPLD	1.27	137.41	80.14	67.20	11.29						
	2-Wire Voice Unbundled 2-Way Combination PBX Usage Port			UEPFP	UEPXA	1.27	137.41	80.14	67.20	11.29						
	2-Wire Voice Unbundled PBX Toll Terminal Hotel Ports			UEPFP	UEPXB	1.27	137.41	80.14	67.20	11.29						
	2-Wire Voice Unbundled PBX LD DDD Terminals Port			UEPFP	UEPXC	1.27	137.41	80.14	67.20	11.29						
	2-Wire Voice Unbundled PBX LD Terminal Switchboard Port			UEPFP	UEPXD	1.27	137.41	80.14	67.20	11.29						
	2-Wire Voice Unbundled PBX LD Terminal Switchboard IDD Capable Port			UEPFP	UEPXE	1.27	137.41	80.14	67.20	11.29						
	2-Wire Voice Unbundled 2-Way PBX Hotel/Hospital Economy Administrative Calling Port			UEPFP	UEPXL	1.27	137.41	80.14	67.20	11.29						
	2-Wire Voice Unbundled 2-Way PBX Hotel/Hospital Economy Room Calling Port			UEPFP	UEPXM	1.27	137.41	80.14	67.20	11.29						
	2-Wire Voice Unbundled 1-Way Outgoing PBX Hotel/Hospital Discount Room Calling Port			UEPFP	UEPXO	1.27	137.41	80.14	67.20	11.29						
	2-Wire Voice Unbundled 2-Way PBX Mississippi Local Economy Calling Port			UEPFP	UEPXQ	1.27	137.41	80.14	67.20	11.29						
	2-Wire Voice Unbundled 2-Way PBX Mississippi Local Optional Calling Port			UEPFP	UEPXR	1.27	137.41	80.14	67.20	11.29						
	2-Wire Voice Unbundled 1-Way Outgoing PBX Measured Port			UEPFP	UEPXS	1.27	137.41	80.14	67.20	11.29						
	Mississippi PBX 2-Way Combo Local Opt 2 Calling Port			UEPFP	UEPA5	1.27	137.41	80.14	67.20	11.29						
LOCAL NUMBER PORTABILITY																
	Local Number Portability (1 per port)			UEPFP	LNPCP	3.15	0.00	0.00								
INTEROFFICE TRANSPORT																
	Interoffice Transport - Dedicated - 2 Wire Voice Grade - Facility Termination			UEPFP	U1TV2	20.32	40.77	27.57	17.26	7.11						
	Interoffice Transport - Dedicated - 2 Wire Voice Grade - Per Mile or Fraction Mile			UEPFP	1L5XX	0.0088										
FEATURES																
	All Features Offered			UEPFP	UEPVF	2.56	0.00	0.00								
NONRECURRING CHARGES (NRCs) - CURRENTLY COMBINED																
	2-Wire Loop / Dedicated IO Transport / 2 Wire Line Port Combination - Conversion - Switch-as-is			UEPFP	USAC2		16.94	3.72								
	2-Wire Loop / Dedicated IO Transport / 2 Wire Line Port Combination - Conversion - Switch with change			UEPFP	USACC		16.94	3.72								
	Unbundled Miscellaneous Rate Element, Tag Designed Loop at End User Premise			UEPFP	URETN		11.19	1.10								
UNBUNDLED PORT/LOOP COMBINATIONS - COST BASED RATES																
2-WIRE VOICE GRADE LOOP- BUS ONLY - WITH 2-WIRE DID TRUNK PORT																
UNE Port/Loop Combination Rates																
	2-Wire VG Loop/2-Wire DID Trunk Port Combo - UNE Zone 1		1			21.32										
	2-Wire VG Loop/2-Wire DID Trunk Port Combo - UNE Zone 2		2			26.16										
	2-Wire VG Loop/2-Wire DID Trunk Port Combo - UNE Zone 3		3			34.98										
	2-Wire VG Loop/2-Wire DID Trunk Port Combo - UNE Zone 4		4			53.15										
UNE Loop Rates																

UNBUNDLED NETWORK ELEMENTS - Mississippi														Attachment: 2		Exhibit: A	
CATEGORY	RATE ELEMENTS	Interim	Zone	BCS	USOC	RATES ($)					Svc Order Submitted Elec per LSR	Svc Order Submitted Manually per LSR	Incremental Charge - Manual Svc Order vs. Electronic-1st	Incremental Charge - Manual Svc Order vs. Electronic-Add'l	Incremental Charge - Manual Svc Order vs. Electronic-Disc 1st	Incremental Charge - Manual Svc Order vs. Electronic-Disc Add'l
						Rec	Nonrecurring		Nonrecurring Disconnect		OSS Rates ($)					
							First	Add'l	First	Add'l	SOMEC	SOMAN	SOMAN	SOMAN	SOMAN	SOMAN
	2-Wire Analog Voice Grade Loop - (SL2) - UNE Zone 1		1	UEPPX	UECD1	13.89										
	2-Wire Analog Voice Grade Loop - (SL2) - UNE Zone 2		2	UEPPX	UECD1	18.75										
	2-Wire Analog Voice Grade Loop - (SL2) - UNE Zone 3		3	UEPPX	UECD1	27.55										
	2-Wire Analog Voice Grade Loop - (SL2) - UNE Zone 4		4	UEPPX	UECD1	45.72										
UNE Port Rate																
	Exchange Ports - 2-Wire DID Port			UEPPX	UEPD1	7.43	225.96	87.13	114.59	14.25						
NONRECURRING CHARGES - CURRENTLY COMBINED																
	2-Wire Voice Grade Loop / 2-Wire DID Trunk Port Combination - Switch-as-is			UEPPX	USAC1		7.35	1.88								
	2-Wire Voice Grade Loop / 2-Wire DID Trunk Port Conversion with BellSouth Allowable Changes			UEPPX	USA1C		7.35	1.88								
ADDITIONAL NRCs																
	2-Wire DID Subsequent Activity - Add Trunks, Per Trunk			UEPPX	USAS1		26.94	26.94								
	Unbundled Miscellaneous Rate Element, Tag Designed Loop at End User Premise			UEPPX	URETN		11.19	1.10								
Telephone Number/Trunk Group Establisment Charges																
	DID Trunk Termination (One Per Port)			UEPPX	NDT	0.00	0.00	0.00								
	Additional DID Numbers for each Group of 20 DID Numbers			UEPPX	ND4	0.00	0.00	0.00								
	DID Numbers, Non- consecutive DID Numbers , Per Number			UEPPX	ND5	0.00	0.00	0.00								
	Reserve Non-Consecutive DID numbers			UEPPX	ND6	0.00	0.00	0.00								
	Reserve DID Numbers			UEPPX	NDV	0.00	0.00	0.00								
LOCAL NUMBER PORTABILITY																
	Local Number Portability (1 per port)			UEPPX	LNPCP	3.15	0.00	0.00								
2-WIRE ISDN DIGITAL GRADE LOOP WITH 2-WIRE ISDN DIGITAL LINE SIDE PORT																
UNE Port/Loop Combination Rates																
	2W ISDN Digital Grade Loop/2W ISDN Digital Line Side Port - UNE Zone 1		1	UEPPB UEPPR		28.59										
	2W ISDN Digital Grade Loop/2W ISDN Digital Line Side Port - UNE Zone 2		2	UEPPB UEPPR		35.00										
	2W ISDN Digital Grade Loop/2W ISDN Digital Line Side Port - UNE Zone 3		3	UEPPB UEPPR		45.18										
	2W ISDN Digital Grade Loop/2W ISDN Digital Line Side Port - UNE Zone 4		4			67.61										
UNE Loop Rates																
	2-Wire ISDN Digital Grade Loop - UNE Zone 1		1	UEPPB UEPPR	USL2X	18.26										
	2-Wire ISDN Digital Grade Loop - UNE Zone 2		2	UEPPB UEPPR	USL2X	24.67										
	2-Wire ISDN Digital Grade Loop - UNE Zone 3		3	UEPPB UEPPR	USL2X	34.85										
	2-Wire ISDN Digital Grade Loop - UNE Zone 4		4	UEPPB UEPPR	USL2X	57.28										
UNE Port Rate																
	Exchange Port - 2-Wire ISDN Line Side Port			UEPPB UEPPR	UEPPB	10.33	190.80	133.22	100.72	21.13						
NONRECURRING CHARGES - CURRENTLY COMBINED																
	2-Wire ISDN Digital Grade Loop / 2-Wire ISDN Line Side Port Combination - Conversion			UEPPB UEPPR	USACB	0.00	38.73	27.17								
ADDITIONAL NRCs																
	Unbundled Miscellaneous Rate Element, Tag Designed Loop at End User Premise			UEPPB UEPPR	URETN		11.19	1.10								
	Unbundled Miscellaneous Rate Element, Tag Loop at End User Premise			UEPPB UEPPR	URETL		8.33	0.83								
LOCAL NUMBER PORTABILITY																
	Local Number Portability (1 per port)			UEPPB UEPPR	LNPCX	0.35	0.00	0.00								
B-CHANNEL USER PROFILE ACCESS:																
	CVS/CSD (DMS/5ESS)			UEPPB UEPPR	U1UCA	0.00	0.00	0.00								
	CVS (EWSD)			UEPPB UEPPR	U1UCB	0.00	0.00	0.00								
	CSD			UEPPB UEPPR	U1UCC	0.00	0.00	0.00								
B-CHANNEL AREA PLUS USER PROFILE ACCESS: (AL,KY,LA,MS SC,MS, & TN)																
	CVS/CSD (DMS/5ESS)			UEPPB UEPPR	U1UCD	0.00	0.00	0.00								
	CVS (EWSD)			UEPPB UEPPR	U1UCE	0.00	0.00	0.00								
	CSD			UEPPB UEPPR	U1UCF	0.00	0.00	0.00								

UNBUNDLED NETWORK ELEMENTS - Mississippi														Attachment: 2		Exhibit: A	
CATEGORY	RATE ELEMENTS	Interim	Zone	BCS	USOC	RATES ($)					Svc Order Submitted Elec per LSR	Svc Order Submitted Manually per LSR	Incremental Charge - Manual Svc Order vs. Electronic-1st	Incremental Charge - Manual Svc Order vs. Electronic-Add'l	Incremental Charge - Manual Svc Order vs. Electronic-Disc 1st	Incremental Charge - Manual Svc Order vs. Electronic-Disc Add'l
						Rec	Nonrecurring		Nonrecurring Disconnect		OSS Rates ($)					
							First	Add'l	First	Add'l	SOMEC	SOMAN	SOMAN	SOMAN	SOMAN	SOMAN
USER TERMINAL PROFILE																
	User Terminal Profile (EWSD only)			UEPPB UEPPR	U1UMA	0.00	0.00	0.00								
VERTICAL FEATURES																
	All Vertical Features - One per Channel B User Profile			UEPPB UEPPR	UEPVF	2.56	0.00	0.00								
INTEROFFICE CHANNEL MILEAGE																
	Interoffice Channel mileage each, including first mile and facilities termination			UEPPB UEPPR	M1GNC	22.5298	40.77	27.57	17.26	7.11						
	Interoffice Channel mileage each, additional mile			UEPPB UEPPR	M1GNM	0.0098	0.00	0.00								
4-WIRE DS1 DIGITAL LOOP WITH 4-WIRE ISDN DS1 DIGITAL TRUNK PORT																
The UNE-P DS1 combination rates below for in this rate exhibit apply to the embedded base in place as of 10/2/03 until 4/1/04. After 4/1/04 these rates shall revert to tariff rates or a separate commercial agreement.																
Requests for 4-Wire DS1 Digital Loop with 4-Wire ISDN DS1 Digital Trunk Port after the effective date of this amendment shall be provided pursuant to a separate agreement or tariff at BellSouth's discretion.																
UNE Port/Loop Combination Rates																
	4W DS1 Digital Loop/4W ISDN DS1 Digital Trunk Port - UNE Zone 1		1	UEPPP		155.43										
	4W DS1 Digital Loop/4W ISDN DS1 Digital Trunk Port - UNE Zone 2		2	UEPPP		205.74										
	4W DS1 Digital Loop/4W ISDN DS1 Digital Trunk Port - UNE Zone 3		3	UEPPP		283.10										
	4W DS1 Digital Loop/4W ISDN DS1 Digital Trunk Port - UNE Zone 4		4	UEPPP		534.81										
UNE Loop Rates																
	4-Wire DS1 Digital Loop - UNE Zone 1		1	UEPPP	USL4P	79.08										
	4-Wire DS1 Digital Loop - UNE Zone 2		2	UEPPP	USL4P	129.38										
	4-Wire DS1 Digital Loop - UNE Zone 3		3	UEPPP	USL4P	206.74										
	4-Wire DS1 Digital Loop - UNE Zone 4		4	UEPPP	USL4P	458.46										
UNE Port Rate																
	Exchange Ports - 4-Wire ISDN DS1 Port (E:4/1/2004)			UEPPP	UEPPP	76.35	458.93	260.59	127.75	32.76						
NONRECURRING CHARGES - CURRENTLY COMBINED																
	4-Wire DS1 Digital Loop / 4-Wire ISDN DS1 Digital Trunk Port Combination - Conversion -Switch-as-is (E:4/1/2004)			UEPPP	USACP	0.00	119.76	79.01								
ADDITIONAL NRCs																
	4-Wire DS1 Loop/4-W ISDN Digtl Trk Port - Subsqt Actvy-Inward/two way Tel Nos. (except NC)			UEPPP	PR7TF		0.49									
	4-Wire DS1 Loop / 4-Wire ISDN DS1 Digital Trunk Port - Outward Tel Numbers (All States except NC)			UEPPP	PR7TO		11.58	11.58								
	4-Wire DS1 Loop / 4-Wire ISDN DS1 Digital Trk Port - Subsequent Inward Tel Numbers			UEPPP	PR7ZT		23.15	23.15								
LOCAL NUMBER PORTABILITY																
	Local Number Portability (1 per port)			UEPPP	LNPCN	1.75										
INTERFACE (Provsioning Only)																
	Voice/Data			UEPPP	PR71V	0.00	0.00	0.00								
	Digital Data			UEPPP	PR71D	0.00	0.00	0.00								
	Inward Data			UEPPP	PR71E	0.00	0.00	0.00								
New or Additional "B" Channel																
	New or Additional - Voice/Data B Channel			UEPPP	PR7BV	0.00	14.61									
	New or Additional - Digital Data B Channel			UEPPP	PR7BF	0.00	14.61									
	New or Additional Inward Data B Channel			UEPPP	PR7BD	0.00	14.61									
CALL TYPES																
	Inward			UEPPP	PR7C1	0.00	0.00	0.00								
	Outward			UEPPP	PR7CO	0.00	0.00	0.00								
	Two-way			UEPPP	PR7CC	0.00	0.00	0.00								
Interoffice Channel Mileage																
	Fixed Each Including First Mile			UEPPP	1LN1A	57.53	89.79	82.28	16.66	14.90						
	Each Airline-Fractional Additional Mile			UEPPP	1LN1B	0.20										
4-WIRE DS1 DIGITAL LOOP WITH 4-WIRE DDITS TRUNK PORT																
The UNE-P DS1 combination rates below for in this rate exhibit apply to the embedded base in place as of 10/2/03 until 4/1/04. After 4/1/04 these rates shall revert to tariff rates or a separate commercial agreement.																
Requests for 4-Wire DS1 Digital Loop with 4-Wire DDITS after the effective date of this amendment shall be provided pursuant to a separate agreement or tariff at BellSouth's discretion.																
UNE Port/Loop Combination Rates																
	4W DS1 Digital Loop/4W DDITS Trunk Port - UNE Zone 1		1	UEPDC		131.78										

UNBUNDLED NETWORK ELEMENTS - Mississippi														Attachment: 2		Exhibit: A	
CATEGORY	RATE ELEMENTS	Interim	Zone	BCS	USOC	RATES ($)					Svc Order Submitted Elec per LSR	Svc Order Submitted Manually per LSR	Incremental Charge - Manual Svc Order vs. Electronic-1st	Incremental Charge - Manual Svc Order vs. Electronic-Add'l	Incremental Charge - Manual Svc Order vs. Electronic-Disc 1st	Incremental Charge - Manual Svc Order vs. Electronic-Disc Add'l
						Rec	Nonrecurring		Nonrecurring Disconnect		OSS Rates ($)					
							First	Add'l	First	Add'l	SOMEC	SOMAN	SOMAN	SOMAN	SOMAN	SOMAN
	4W DS1 Digital Loop/4W DDITS Trunk Port - UNE Zone 2		2	UEPDC		182.07										
	4W DS1 Digital Loop/4W DDITS Trunk Port - UNE Zone 3		3	UEPDC		259.44										
	4W DS1 Digital Loop/4W DDITS Trunk Port - UNE Zone 4		4	UEPDC		511.15										
UNE Loop Rates																
	4-Wire DS1 Digital Loop - UNE Zone 1		1	UEPDC	USLDC	79.08										
	4-Wire DS1 Digital Loop - UNE Zone 2		2	UEPDC	USLDC	129.38										
	4-Wire DS1 Digital Loop - UNE Zone 3		3	UEPDC	USLDC	206.74										
	4-Wire DS1 Digital Loop - UNE Zone 4		4	UEPDC	USLDC	458.46										
UNE Port Rate																
	4-Wire DDITS Digital Trunk Port (E:4/1/2004)			UEPDC	UDD1T	52.70	457.12	254.70	120.96	14.61						
NONRECURRING CHARGES - CURRENTLY COMBINED																
	4-Wire DS1 Digital Loop / 4-Wire DDITS Trunk Port Combination - Switch-as-is (E:4/1/2004)			UEPDC	USAC4		130.24	67.41								
	4-Wire DS1 Digital Loop / 4-Wire DDITS Trunk Port Combination - Conversion with DS1 Changes (E:4/1/2004)			UEPDC	USAWA		130.24	67.41								
	4-Wire DS1 Digital Loop / 4-Wire DDITS Trunk Port Combination - Conversion with Change - Trunk (E:4/1/2004)			UEPDC	USAWB		130.24	67.41								
ADDITIONAL NRCs																
	4-Wire DS1 Loop / 4-Wire DDITS Trunk Port - NRC - Subsequent Channel Activation/Chan - 2-Way Trunk			UEPDC	UDTTA		14.56	14.56								
	4-Wire DS1 Loop / 4-Wire DDITS Trunk Port - Subsequent Channel Activation/Chan - 1-Way Outward Trunk			UEPDC	UDTTB		14.56	14.56								
	4-Wire DS1 Loop / 4-Wire DDITS Trunk Port - Subsqnt Channel Activation/Chan Inward Trunk w/out DID			UEPDC	UDTTC		14.56	14.56								
	4-Wire DS1 Loop / 4-Wire DDITS Trunk Port - Subsqnt Chan Activation Per Chan - Inward Trunk with DID			UEPDC	UDTTD		14.56	14.56								
	4-Wire DS1 Loop / 4-Wire DDITS Trunk Port - Subsqnt Chan Activation / Chan - 2-Way DID w User Trans			UEPDC	UDTTE		14.56	14.56								
BIPOLAR 8 ZERO SUBSTITUTION																
	B8ZS -Superframe Format			UEPDC	CCOSF		0.00i	600.00s								
	B8ZS - Extended Superframe Format			UEPDC	CCOEF		0.00i	600.00s								
Alternate Mark Inversion																
	AMI -Superframe Format			UEPDC	MCOSF		0.00	0.00								
	AMI - Extended SuperFrame Format			UEPDC	MCOPO		0.00	0.00								
Telephone Number/Trunk Group Establisment Charges																
	Telephone Number for 2-Way Trunk Group			UEPDC	UDTGX	0.00										
	Telephone Number for 1-Way Outward Trunk Group			UEPDC	UDTGY	0.00										
	Telephone Number for 1-Way Inward Trunk Group Without DID			UEPDC	UDTGZ	0.00										
	DID Numbers for each Group of 20 DID Numbers			UEPDC	ND4	0.00										
	DID Numbers, Non- consecutive DID Numbers , Per Number			UEPDC	ND5	0.00										
	Reserve Non-Consecutive DID Nos.			UEPDC	ND6	0.00	0.00	0.00								
	Reserve DID Numbers			UEPDC	NDV	0.00	0.00	0.00								
Dedicated DS1 (Interoffice Channel Mileage) - FX/FCO for 4-Wire DS1 Digital Loop with 4-Wire DDITS Trunk Port																
	Interoffice Channel Mileage - Fixed rate 0-8 miles (Facilities Termination)			UEPDC	1LNO1	57.33	89.79	82.28	16.86	14.90						
	Interoffice Channel Mileage - Additional rate per mile - 0-8 miles			UEPDC	1LNOA	0.20	0.00	0.00								
	Interoffice Channel Mileage - Fixed rate 9-25 miles (Facilities Termination)			UEPDC	1LNO2	0.00	0.00	0.00								
	Interoffice Channel Mileage - Additional rate per mile - 9-25 miles			UEPDC	1LNOB	0.20	0.00	0.00								
	Interoffice Channel Mileage - Fixed rate 25+ miles (Facilities Termination)			UEPDC	1LNO3	0.00	0.00	0.00	0.00							
	Interoffice Channel Mileage - Additional rate per mile - 25+ miles			UEPDC	1LNOC	0.20	0.00	0.00								
	Local Number Portability, per DS0 Activated			UEPDC	LNPCP	3.15	0.00	0.00	0.00							
	Central Office Termininating Point			UEPDC	CTG	0.00										
4-WIRE DS1 LOOP WITH CHANNELIZATION WITH PORT																
System is 1 DS1 Loop, 1 D4 Channel Bank, and up to 24 Feature Activations																

UNBUNDLED NETWORK ELEMENTS - Mississippi													Attachment: 2		Exhibit: A	
CATEGORY	RATE ELEMENTS	Interim	Zone	BCS	USOC	RATES ($)					Svc Order Submitted Elec per LSR	Svc Order Submitted Manually per LSR	Incremental Charge - Manual Svc Order vs. Electronic-1st	Incremental Charge - Manual Svc Order vs. Electronic-Add'l	Incremental Charge - Manual Svc Order vs. Electronic-Disc 1st	Incremental Charge - Manual Svc Order vs. Electronic-Disc Add'l
						Rec	Nonrecurring		Nonrecurring Disconnect		OSS Rates ($)					
							First	Add'l	First	Add'l	SOMEC	SOMAN	SOMAN	SOMAN	SOMAN	SOMAN
	Each System can have up to 24 combinations of rates depending on type and number of ports used															
	The UNE-P DS1 combination rates below for 4-Wire DS1 Loop with Channelization with Port in this rate exhibit apply to the embedded base in place as of 10/2/03 until 4/1/04. After 4/1/04 these rates shall revert to tariff rates or a separate agreement.															
	Requests for 4-Wire DS1 Loop with Channelization with Port after the effective date of this amendment shall be provided pursuant to a separate agreement or tariff at BellSouth's discretion.															
	UNE DS1 Loop															
	4-Wire DS1 Loop - UNE Zone 1		1	UEPMG	USLDC	79.08	0.00	0.00								
	4-Wire DS1 Loop - UNE Zone 2		2	UEPMG	USLDC	129.38	0.00	0.00								
	4-Wire DS1 Loop - UNE Zone 3		3	UEPMG	USLDC	206.74	0.00	0.00								
	4-Wire DS1 Loop - UNE Zone 4		4	UEPMG	USLDC	458.46	0.00	0.00								
	UNE DSO Channelization Capacities (D4 Channel Bank Configurations)															
	24 DSO Channel Capacity - 1 per DS1			UEPMG	VUM24	95.06	0.00	0.00								
	48 DSO Channel Capacity - 1 per 2 DS1s			UEPMG	VUM48	190.12	0.00	0.00								
	96 DSO Channel Capacity -1per 4 DS1s			UEPMG	VUM96	380.24	0.00	0.00								
	144 DS0 Channel Capacity - 1 per 6 DS1s			UEPMG	VUM14	570.36	0.00	0.00								
	192 DS0 Channel Capacity -1 per 8 DS1s			UEPMG	VUM19	760.48	0.00	0.00								
	240 DS0 Channel Capacity - 1 per 10 DS1s			UEPMG	VUM2O	950.60	0.00	0.00								
	288 DS0 Channel Capacity - 1 per 12 DS1s			UEPMG	VUM28	1,140.72	0.00	0.00								
	384 DS0 Channel Capacity - 1 per 16 DS1s			UEPMG	VUM38	1,520.96	0.00	0.00								
	480 DS0 Channel Capacity - 1 per 20 DS1s			UEPMG	VUM4O	1,901.20	0.00	0.00								
	576 DS0 Channel Capacity -1 per 24 DS1s			UEPMG	VUM57	2,281.44	0.00	0.00								
	672 DS0 Channel Capacity - 1 per 28 DS1s			UEPMG	VUM67	2,661.68	0.00	0.00								
	Non-Recurring Charges (NRC) Associated with 4-Wire DS1 Loop with Channeliztion with Port - Conversion Charge Based on a System															
	A Minimum System configuration is One (1) DS1, One (1) D4 Channel Bank, and Up To 24 DSO Ports with Feature Activations.															
	Multiples of this configuration functioning as one are considered Add'l after the minimum system configuration is counted.															
	NRC - Conversion (Currently Combined) with or without BellSouth Allowed Changes			UEPMG	USAC4	0.00	151.35	8.41								
	System Additions at End User Locations Where 4-Wire DS1 Loop with Channelization with Port Combination Currently Exists and															
	New (Not Currently Combined) in all states, except in Density Zone 1 of Top 8 MSA's															
	1 DS1/D4 Channel Bank - Additionally Add NRC for each Port and Assoc Fea Activation (E:4/1/2004)			UEPMG	VUMD4	0.00	715.15	327.39	148.05	17.56						
	Bipolar 8 Zero Substitution															
	Clear Channel Capability Format, superframe - Subsequent Activity Only			UEPMG	CCOSF	0.00	0.00i	600.00s								
	Clear Channel Capability Format - Extended Superframe - Subsequent Activity Only			UEPMG	CCOEF	0.00	0.00i	600.00s								
	Alternate Mark Inversion (AMI)															
	Superframe Format			UEPMG	MCOSF	0.00	0.00	0.00								
	Extended Superframe Format			UEPMG	MCOPO	0.00	0.00	0.00								
	Exchange Ports Associated with 4-Wire DS1 Loop with Channelization with Port															
	Exchange Ports															
	Line Side Combination Channelized PBX Trunk Port - Business (E:4/1/2004)			UEPPX	UEPCX	1.23	0.00	0.00	0.00	0.00						
	Line Side Outward Channelized PBX Trunk Port - Business (E:4/1/2004)			UEPPX	UEPOX	1.23	0.00	0.00	0.00	0.00						
	Line Side Inward Only Channelized PBX Trunk Port without DID (E:4/1/2004)			UEPPX	UEP1X	1.23	0.00	0.00	0.00	0.00						
	2-Wire Trunk Side Unbundled Channelized DID Trunk Port (E:4/1/2004)			UEPPX	UEPDM	7.40	0.00	0.00	0.00	0.00						
	Unbundled Exchange Ports, 2-Wire Channelized – Outdial – (AL, KY, LA, MS, & TN)(Conversion from Network Access Service) (E:4/1/2004)			UEPPX	UEPCY	1.23	0.00	0.00	0.00	0.00						
	Unbundled Exchange Ports, 2-Wire Channelized – Combination (AL, KY, LA, MS, & TN) (Conversion from Network Access Service) (E:4/1/2004)			UEPPX	UEPCT	1.23	0.00	0.00	0.00	0.00						
	Unbundled Exchange Ports, 2-Wire Channelized – Outdial– Mississippi Only – Calling Plan (E:4/1/2004)			UEPPX	UEPC4	1.23	0.00	0.00	0.00	0.00						
	Unbundled Exchange Ports, 2-Wire Channelized – Two Way - Mississippi Only – Calling Plan (E:4/1/2004)			UEPPX	UEPC7	1.23	0.00	0.00	0.00	0.00						
	Feature Activations - Unbundled Loop Concentration															

UNBUNDLED NETWORK ELEMENTS - Mississippi														Attachment: 2		Exhibit: A	
CATEGORY		RATE ELEMENTS	Interim	Zone	BCS	USOC	RATES ($)					Svc Order Submitted Elec per LSR	Svc Order Submitted Manually per LSR	Incremental Charge - Manual Svc Order vs. Electronic-1st	Incremental Charge - Manual Svc Order vs. Electronic-Add'l	Incremental Charge - Manual Svc Order vs. Electronic-Disc 1st	Incremental Charge - Manual Svc Order vs. Electronic-Disc Add'l
							Rec	Nonrecurring		Nonrecurring Disconnect		OSS Rates ($)					
								First	Add'l	First	Add'l	SOMEC	SOMAN	SOMAN	SOMAN	SOMAN	SOMAN
		Feature (Service) Activation for each Line Port Terminated in D4 Bank			UEPPX	1PQWM	0.61	25.36	13.39	4.29	4.26						
		Feature (Service) Activation for each Trunk Port Terminated in D4 Bank			UEPPX	1PQWU	0.61	78.03	18.39	60.66	11.85						
	Telephone Number/ Group Establishment Charges for DID Service																
		DID Trunk Termination (1 per Port)			UEPPX	NDT	0.00	0.00	0.00								
		DID Numbers - groups of 20 - Valid all States			UEPPX	ND4	0.00	0.00	0.00								
		Non-Consecutive DID Numbers - per number			UEPPX	ND5	0.00	0.00	0.00								
		Reserve Non-Consecutive DID Numbers			UEPPX	ND6	0.00	0.00	0.00								
		Reserve DID Numbers			UEPPX	NDV	0.00	0.00	0.00								
	Local Number Portability																
		Local Number Portability - 1 per port			UEPPX	LNPCP	3.15	0.00	0.00								
	FEATURES - Vertical and Optional																
	Local Switching Features Offered with Line Side Ports Only																
		All Features Available			UEPPX	UEPVF	2.56	0.00	0.00								
UNBUNDLED CENTREX PORT/LOOP COMBINATIONS - COST BASED RATES																	
	1. Cost Based Rates are applied where BellSouth is required by FCC and/or State Commission rule to provide Unbundled Local Switching or Switch Ports.																
	2. Features shall apply to the Unbundled Port/Loop Combination - Cost Based Rate section in the same manner as they are applied to the Stand-Alone Unbundled Port section of this Rate Exhibit.																
	3. End Office and Tandem Switching Usage and Common Transport Usage rates in the Port section of this rate exhibit shall apply to all combinations of loop/port network elements except for UNE Coin Port/Loop Combinations.																
	4. The first and additional Port nonrecurring charges apply to Not Currently Combined Combos. For Currently Combined Combos, the nonrecurring charges shall be those identified in the Nonrecurring - Currently Combined sections. Additional NRCs may apply also and are categorized accordingly.																
	5. Market Rates for Unbundled Centrex Port/Loop Combination will be negotiated on an Individual Case Basis, until further notice.																
	UNE-P CENTREX - 1AESS - (Valid in AL,FL,GA,KY,LA,MS,&TN only)																
	2-Wire VG Loop/2-Wire Voice Grade Port (Centrex) Combo																
	UNE Port/Loop Combination Rates (Non-Design)																
		2-Wire VG Loop/2-Wire Voice Grade Port (Centrex) Port Combo - Non-Design		1	UEP91		12.22										
		2-Wire VG Loop/2-Wire Voice Grade Port (Centrex)Port Combo - Non-Design		2	UEP91		17.13										
		2-Wire VG Loop/2-Wire Voice Grade Port (Centrex)Port Combo - Non-Design		3	UEP91		26.26										
		2-Wire VG Loop/2-Wire Voice Grade Port (Centrex) Port Combo - Non-Design		4	UEP91		44.91										
	UNE Port/Loop Combination Rates (Design)																
		2-Wire VG Loop/2-Wire Voice Grade Port (Centrex) Port Combo - Design		1	UEP91		15.12										
		2-Wire VG Loop/2-Wire Voice Grade Port (Centrex)Port Combo - Design		2	UEP91		19.98										
		2-Wire VG Loop/2-Wire Voice Grade Port (Centrex)Port Combo - Design		3	UEP91		28.78										
		2-Wire VG Loop/2-Wire Voice Grade Port (Centrex) Port Combo - Design		4	UEP91		46.95										
	UNE Loop Rate																
		2-Wire Voice Grade Loop (SL 1) - Zone 1		1	UEP91	UECS1	10.98										
		2-Wire Voice Grade Loop (SL 1) - Zone 2		2	UEP91	UECS1	15.91										
		2-Wire Voice Grade Loop (SL 1) - Zone 3		3	UEP91	UECS1	25.04										
		2-Wire Voice Grade Loop (SL 1) - Zone 4		4	UEP91	UECS1	43.68										
		2-Wire Voice Grade Loop (SL 2) - Zone 1		1	UEP91	UECS2	13.89										
		2-Wire Voice Grade Loop (SL 2) - Zone 2		2	UEP91	UECS2	18.75										
		2-Wire Voice Grade Loop (SL 2) - Zone 3		3	UEP91	UECS2	27.55										
		2-Wire Voice Grade Loop (SL 2) - Zone 4		4	UEP91	UECS2	45.72										
	UNE Ports																
	All States (Except North Carolina and Sout Carolina)																
		2-Wire Voice Grade Port (Centrex) Basic Local Area			UEP91	UEPYA	1.23	40.31	19.84	24.90	6.58						
		2-Wire Voice Grade Port (Centrex 800 termination)Basic Local Area			UEP91	UEPYB	1.23	40.31	19.84	24.90	6.58						
		2-Wire Voice Grade Port (Centrex with Caller ID)Note1 Basic Local Area			UEP91	UEPYH	1.23	40.31	19.84	24.90	6.58						

CATEGORY	RATE ELEMENTS	Interim	Zone	BCS	USOC	RATES ($) Rec	Nonrecurring First	Nonrecurring Add'l	Nonrecurring Disconnect First	Nonrecurring Disconnect Add'l	Svc Order Submitted Elec per LSR	Svc Order Submitted Manually per LSR	Attachment: 2 Incremental Charge - Manual Svc Order vs. Electronic-1st	Attachment: 2 Incremental Charge - Manual Svc Order vs. Electronic-Add'l	Exhibit: A Incremental Charge - Manual Svc Order vs. Electronic-Disc 1st	Exhibit: A Incremental Charge - Manual Svc Order vs. Electronic-Disc Add'l
											OSS Rates ($)					
											SOMEC	SOMAN	SOMAN	SOMAN	SOMAN	SOMAN
	2-Wire Voice Grade Port (Centrex from diff Serving Wire Center) Note 2, 3 Basic Local Area			UEP91	UEPYM	1.23	108.35	70.57	54.24	11.70						
	2-Wire Voice Grade Port, Diff Serving Wire Center - 800 Service Term - Basic Local Area			UEP91	UEPYZ	1.23	108.35	70.57	54.24	11.70						
	2-Wire Voice Grade Port terminated in on Megalink or equivalent - Basic Local Area			UEP91	UEPY9	1.23	40.31	19.84	24.90	6.58						
	2-Wire Voice Grade Port Terminated on 800 Service Term - Basic Local Area			UEP91	UEPY2	1.23	40.31	19.84	24.90	6.58						
AL, KY, LA, MS, & TN Only																
	2-Wire Voice Grade Port (Centrex)			UEP91	UEPQA	1.23	40.31	19.84	24.90	6.58						
	2-Wire Voice Grade Port (Centrex 800 termination)			UEP91	UEPQB	1.23	40.31	19.84	24.90	6.58						
	2-Wire Voice Grade Port (Centrex with Caller ID)1			UEP91	UEPQH	1.23	40.31	19.84	24.90	6.58						
	2-Wire Voice Grade Port (Centrex from diff Serving Wire Center)2,3			UEP91	UEPQM	1.23	108.35	70.57	54.24	11.70						
	2-Wire Voice Grade Port, Diff Serving Wire Center - 2,3 - 800 Service Term			UEP91	UEPQZ	1.23	108.35	70.57	54.24	11.70						
	2-Wire Voice Grade Port terminated in on Megalink or equivalent			UEP91	UEPQ9	1.23	40.31	19.84	24.90	6.58						
	2-Wire Voice Grade Port Terminated on 800 Service Term			UEP91	UEPQ2	1.23	40.31	19.84	24.90	6.58						
Local Switching																
	Centrex Intercom Funtionality, per port			UEP91	URECS	0.7947										
Local Number Portability																
	Local Number Portability (1 per port)			UEP91	LNPCC	0.35										
Features																
	All Standard Features Offered, per port			UEP91	UEPVF	2.56										
	All Select Features Offered, per port			UEP91	UEPVS	0.00	404.98									
	All Centrex Control Features Offered, per port			UEP91	UEPVC	2.56										
NARS																
	Unbundled Network Access Register - Combination			UEP91	UARCX	0.00	0.00	0.00	0.00	0.00						
	Unbundled Network Access Register - Indial			UEP91	UAR1X	0.00	0.00	0.00	0.00	0.00						
	Unbundled Network Access Register - Outdial			UEP91	UAROX	0.00	0.00	0.00	0.00	0.00						
Miscellaneous Terminations																
2-Wire Trunk Side																
	Trunk Side Terminations, each			UEP91	CENA6	8.25	120.00	18.85	61.77	3.88						
Interoffice Channel Mileage - 2-Wire																
	Interoffice Channel Facilities Termination - Voice Grade			UEP91	M1GBC	22.52	40.77	27.57	17.26	7.11						
	Interoffice Channel mileage, per mile or fraction of mile			UEP91	M1GBM	0.0098										
Feature Activations (DS0) Centrex Loops on Channelized DS1 Service																
D4 Channel Bank Feature Activations																
	Feature Activation on D-4 Channel Bank Centrex Loop Slot			UEP91	1PQWS	0.57										
	Feature Activation on D-4 Channel Bank FX line Side Loop Slot			UEP91	1PQW6	0.57										
	Feature Activation on D-4 Channel Bank FX Trunk Side Loop Slot			UEP91	1PQW7	0.57										
	Feature Activation on D-4 Channel Bank Centrex Loop Slot - Different Wire Center			UEP91	1PQWP	0.57										
	Feature Activation on D-4 Channel Bank Private Line Loop Slot			UEP91	1PQWV	0.57										
	Feature Activation on D-4 Channel Bank Tjie Line/Trunk Loop Slot			UEP91	1PQWQ	0.57										
	Feature Activation on D-4 Channel Bank WATS Loop Slot			UEP91	1PQWA	0.57										
Non-Recurring Charges (NRC) Associated with UNE-P Centrex																
	Conversion - Currently Combined Switch-As-Is with allowed changes, per port			UEP91	USAC2		0.10	0.10								
	Conversion of Existing Centrex Common Block			UEP91	USACN		37.97	16.68								
	New Centrex Standard Common Block			UEP91	M1ACS	0.00	666.32									
	New Centrex Customized Common Block			UEP91	M1ACC	0.00	666.32									
	Secondary Block, per Block			UEP91	M2CC1	0.00	77.91									
	NAR Establishment Charge, Per Occasion			UEP91	URECA	0.00	72.63									

UNBUNDLED NETWORK ELEMENTS - Mississippi													Attachment: 2		Exhibit: A	
CATEGORY	RATE ELEMENTS	Interim	Zone	BCS	USOC	RATES ($)					Svc Order Submitted Elec per LSR	Svc Order Submitted Manually per LSR	Incremental Charge - Manual Svc Order vs. Electronic-1st	Incremental Charge - Manual Svc Order vs. Electronic-Add'l	Incremental Charge - Manual Svc Order vs. Electronic-Disc 1st	Incremental Charge - Manual Svc Order vs. Electronic-Disc Add'l
						Rec	Nonrecurring		Nonrecurring Disconnect		OSS Rates ($)					
							First	Add'l	First	Add'l	SOMEC	SOMAN	SOMAN	SOMAN	SOMAN	SOMAN
Additional Non-Recurring Charges (NRC)																
	Unbundled Miscellaneous Rate Element, Tag Loop at End Use Premise			UEP91	URETL		8.33	0.83								
	Unbundled Miscellaneous Rate Element, Tag Design Loop at End Use Premise			UEP91	URETN		11.19	1.10								
UNE-P CENTREX - 5ESS (Valid in All States)																
2-Wire VG Loop/2-Wire Voice Grade Port (Centrex) Combo																
UNE Port/Loop Combination Rates (Non-Design)																
	2-Wire VG Loop/2-Wire Voice Grade Port (Centrex) Port Combo - Non-Design		1	UEP95		12.22										
	2-Wire VG Loop/2-Wire Voice Grade Port (Centrex)Port Combo - Non-Design		2	UEP95		17.13										
	2-Wire VG Loop/2-Wire Voice Grade Port (Centrex)Port Combo - Non-Design		3	UEP95		26.26										
	2-Wire VG Loop/2-Wire Voice Grade Port (Centrex) Port Combo - Non-Design		4	UEP95		44.91										
UNE Port/Loop Combination Rates (Design)																
	2-Wire VG Loop/2-Wire Voice Grade Port (Centrex) Port Combo - Design		1	UEP95		15.12										
	2-Wire VG Loop/2-Wire Voice Grade Port (Centrex)Port Combo - Design		2	UEP95		19.98										
	2-Wire VG Loop/2-Wire Voice Grade Port (Centrex)Port Combo - Design		3	UEP95		28.78										
	2-Wire VG Loop/2-Wire Voice Grade Port (Centrex) Port Combo - Design		4	UEP95		46.95										
UNE Loop Rate																
	2-Wire Voice Grade Loop (SL 1) - Zone 1		1	UEP95	UECS1	10.98										
	2-Wire Voice Grade Loop (SL 1) - Zone 2		2	UEP95	UECS1	15.91										
	2-Wire Voice Grade Loop (SL 1) - Zone 3		3	UEP95	UECS1	25.04										
	2-Wire Voice Grade Loop (SL 1) - Zone 4		4	UEP95	UECS1	43.68										
	2-Wire Voice Grade Loop (SL 2) - Zone 1		1	UEP95	UECS2	13.89										
	2-Wire Voice Grade Loop (SL 2) - Zone 2		2	UEP95	UECS2	18.75										
	2-Wire Voice Grade Loop (SL 2) - Zone 3		3	UEP95	UECS2	27.55										
	2-Wire Voice Grade Loop (SL 2) - Zone 4		4	UEP95	UECS2	45.72										
UNE Port Rate																
All States																
	2-Wire Voice Grade Port (Centrex) Basic Local Area			UEP95	UEPYA	1.23	40.31	19.84	24.90	6.58						
	2-Wire Voice Grade Port (Centrex 800 termination)			UEP95	UEPYB	1.23	40.31	19.84	24.90	6.58						
	2-Wire Voice Grade Port (Centrex with Caller ID)1Basic Local Area			UEP95	UEPYH	1.23	40.31	19.84	24.90	6.58						
	2-Wire Voice Grade Port (Centrex from diff Serving Wire Center)2,3 Basic Local Area			UEP95	UEPYM	1.23	108.35	70.57	54.24	11.70						
	2-Wire Voice Grade Port, Diff Serving Wire Center 2,3 - 800 Service Term - Basic Local Area			UEP95	UEPYZ	1.23	108.35	70.57	54.24	11.70						
	2-Wire Voice Grade Port terminated in on Megalink or equivalent - Basic Local Area			UEP95	UEPY9	1.23	40.31	19.84	24.90	6.58						
	2-Wire Voice Grade Port Terminated on 800 Service Term - Basic Local Area			UEP95	UEPY2	1.23	40.31	19.84	24.90	6.58						
AL, KY, LA, MS, SC, & TN Only																
	2-Wire Voice Grade Port (Centrex)			UEP95	UEPQA	1.23	40.31	19.84	24.90	6.58						
	2-Wire Voice Grade Port (Centrex 800 termination)			UEP95	UEPQB	1.23	40.31	19.84	24.90	6.58						
	2-Wire Voice Grade Port (Centrex with Caller ID)1			UEP95	UEPQH	1.23	40.31	19.84	24.90	6.58						
	2-Wire Voice Grade Port (Centrex from diff Serving Wire Center)2,3			UEP95	UEPQM	1.23	108.35	70.57	54.24	11.70						
	2-Wire Voice Grade Port, Diff Serving Wire Center - 800 Service Term 2,3			UEP95	UEPQZ	1.23	108.35	70.57	54.24	11.70						
	2-Wire Voice Grade Port terminated in on Megalink or equivalent			UEP95	UEPQ9	1.23	40.31	19.84	24.90	6.58						
	2-Wire Voice Grade Port Terminated on 800 Service Term			UEP95	UEPQ2	1.23	40.31	19.84	24.90	6.58						

UNBUNDLED NETWORK ELEMENTS - Mississippi														Attachment: 2		Exhibit: A	
CATEGORY	RATE ELEMENTS	Interim	Zone	BCS	USOC	RATES ($)					Svc Order Submitted Elec per LSR	Svc Order Submitted Manually per LSR	Incremental Charge - Manual Svc Order vs. Electronic-1st	Incremental Charge - Manual Svc Order vs. Electronic-Add'l	Incremental Charge - Manual Svc Order vs. Electronic-Disc 1st	Incremental Charge - Manual Svc Order vs. Electronic-Disc Add'l
						Rec	Nonrecurring		Nonrecurring Disconnect		OSS Rates ($)					
							First	Add'l	First	Add'l	SOMEC	SOMAN	SOMAN	SOMAN	SOMAN	SOMAN
FL & GA Only																
Local Switching																
	Centrex Intercom Funtionality, per port			UEP95	URECS	0.7947										
Local Number Portability																
	Local Number Portability (1 per port)			UEP95	LNPCC	0.35										
Features																
	All Standard Features Offered, per port			UEP95	UEPVF	2.56										
	All Select Features Offered, per port			UEP95	UEPVS	0.00	404.98									
	All Centrex Control Features Offered, per port			UEP95	UEPVC	2.56										
NARS																
	Unbundled Network Access Register - Combination			UEP95	UARCX	0.00	0.00	0.00	0.00	0.00						
	Unbundled Network Access Register - Indial			UEP95	UAR1X	0.00	0.00	0.00	0.00	0.00						
	Unbundled Network Access Register - Outdial			UEP95	UAROX	0.00	0.00	0.00	0.00	0.00						
Miscellaneous Terminations																
2-Wire Trunk Side																
	Trunk Side Terminations, each			UEP95	CEND6	8.25	120.00	18.85	61.77	3.88						
4-Wire Digital (1.544 Megabits)																
	DS1 Circuit Terminations, each			UEP95	M1HD1	58.41	203.19	96.25	74.86	2.54						
	DS0 Channels Activated, each			UEP95	M1HDO	0.00	14.56									
Interoffice Channel Mileage - 2-Wire																
	Interoffice Channel Facilities Termination			UEP95	M1GBC	22.52	40.77	27.57	17.26	7.11						
	Interoffice Channel mileage, per mile or fraction of mile			UEP95	M1GBM	0.0098										
Feature Activations (DS0) Centrex Loops on Channelized DS1 Service																
D4 Channel Bank Feature Activations																
	Feature Activation on D-4 Channel Bank Centrex Loop Slot			UEP95	1PQWS	0.57										
	Feature Activation on D-4 Channel Bank FX line Side Loop Slot			UEP95	1PQW6	0.57										
	Feature Activation on D-4 Channel Bank FX Trunk Side Loop Slot			UEP95	1PQW7	0.57										
	Feature Activation on D-4 Channel Bank Centrex Loop Slot - Different Wire Center			UEP95	1PQWP	0.57										
	Feature Activation on D-4 Channel Bank Private Line Loop Slot			UEP95	1PQWV	0.57										
	Feature Activation on D-4 Channel Bank Tjie Line/Trunk Loop Slot			UEP95	1PQWQ	0.57										
	Feature Activation on D-4 Channel Bank WATS Loop Slot			UEP95	1PQWA	0.57										
Non-Recurring Charges (NRC) Associated with UNE-P Centrex																
	NRC Conversion Currently Combined Switch-As-Is with allowed changes, per port			UEP95	USAC2		0.10	0.10								
	Conversion of Existing Centrex Common Block, each			UEP95	USACN		37.97	16.68								
	New Centrex Standard Common Block			UEP95	M1ACS	0.00	666.32									
	New Centrex Customized Common Block			UEP95	M1ACC	0.00	666.32									
	NAR Establishment Charge, Per Occasion			UEP95	URECA	0.00	72.63									
Additional Non-Recurring Charges (NRC)																
	Unbundled Miscellaneous Rate Element, Tag Loop at End Use Premise			UEP95	URETL		8.33	0.83								
	Unbundled Miscellaneous Rate Element, Tag Design Loop at End Use Premise			UEP95	URETN		11.19	1.10								
UNE-P CENTREX - DMS100 (Valid in All States)																
2-Wire VG Loop/2-Wire Voice Grade Port (Centrex) Combo																
UNE Port/Loop Combination Rates (Non-Design)																
	2-Wire VG Loop/2-Wire Voice Grade Port (Centrex) Port Combo - Non-Design		1	UEP9D		12.22										
	2-Wire VG Loop/2-Wire Voice Grade Port (Centrex)Port Combo - Non-Design		2	UEP9D		17.13										
	2-Wire VG Loop/2-Wire Voice Grade Port (Centrex)Port Combo - Non-Design		3	UEP9D		26.26										
	2-Wire VG Loop/2-Wire Voice Grade Port (Centrex) Port Combo - Non-Design		4	UEP9D		44.91										

UNBUNDLED NETWORK ELEMENTS - Mississippi														Attachment: 2		Exhibit: A	
CATEGORY		RATE ELEMENTS	Interim	Zone	BCS	USOC	RATES ($)					Svc Order Submitted Elec per LSR	Svc Order Submitted Manually per LSR	Incremental Charge - Manual Svc Order vs. Electronic-1st	Incremental Charge - Manual Svc Order vs. Electronic-Add'l	Incremental Charge - Manual Svc Order vs. Electronic-Disc 1st	Incremental Charge - Manual Svc Order vs. Electronic-Disc Add'l
							Rec	Nonrecurring		Nonrecurring Disconnect		OSS Rates ($)					
								First	Add'l	First	Add'l	SOMEC	SOMAN	SOMAN	SOMAN	SOMAN	SOMAN
	UNE Port/Loop Combination Rates (Design)																
		2-Wire VG Loop/2-Wire Voice Grade Port (Centrex) Port Combo - Design		1	UEP9D		15.12										
		2-Wire VG Loop/2-Wire Voice Grade Port (Centrex)Port Combo - Design		2	UEP9D		19.98										
		2-Wire VG Loop/2-Wire Voice Grade Port (Centrex)Port Combo - Design		3	UEP9D		28.78										
		2-Wire VG Loop/2-Wire Voice Grade Port (Centrex) Port Combo - Design		4	UEP9D		46.95										
	UNE Loop Rate																
		2-Wire Voice Grade Loop (SL 1) - Zone 1		1	UEP9D	UECS1	10.98										
		2-Wire Voice Grade Loop (SL 1) - Zone 2		2	UEP9D	UECS1	15.91										
		2-Wire Voice Grade Loop (SL 1) - Zone 3		3	UEP9D	UECS1	25.04										
		2-Wire Voice Grade Loop (SL 1) - Zone 4		4	UEP9D	UECS1	43.68										
		2-Wire Voice Grade Loop (SL 2) - Zone 1		1	UEP9D	UECS2	13.89										
		2-Wire Voice Grade Loop (SL 2) - Zone 2		2	UEP9D	UECS2	18.75										
		2-Wire Voice Grade Loop (SL 2) - Zone 3		3	UEP9D	UECS2	27.55										
		2-Wire Voice Grade Loop (SL 2) - Zone 4		4	UEP9D	UECS2	45.72										
	UNE Port Rate																
	ALL STATES																
		2-Wire Voice Grade Port (Centrex) Basic Local Area			UEP9D	UEPYA	1.23	40.31	19.84	24.90	6.58						
		2-Wire Voice Grade Port (Centrex 800 termination)Basic Local Area			UEP9D	UEPYB	1.23	40.31	19.84	24.90	6.58						
		2-Wire Voice Grade Port (Centrex / EBS-PSET)3Basic Local Area			UEP9D	UEPYC	1.23	40.31	19.84	24.90	6.58						
		2-Wire Voice Grade Port (Centrex / EBS-M5009)3Basic Local Area			UEP9D	UEPYD	1.23	40.31	19.84	24.90	6.58						
		2-Wire Voice Grade Port (Centrex / EBS-M5209))3 Basic Local Area			UEP9D	UEPYE	1.23	40.31	19.84	24.90	6.58						
		2-Wire Voice Grade Port (Centrex / EBS-M5112))3 Basic Local Area			UEP9D	UEPYF	1.23	40.31	19.84	24.90	6.58						
		2-Wire Voice Grade Port (Centrex / EBS-M5312))3Basic Local Area			UEP9D	UEPYG	1.23	40.31	19.84	24.90	6.58						
		2-Wire Voice Grade Port (Centrex / EBS-M5008))3 Basic Local Area			UEP9D	UEPYT	1.23	40.31	19.84	24.90	6.58						
		2-Wire Voice Grade Port (Centrex / EBS-M5208))3 Basic Local Area			UEP9D	UEPYU	1.23	40.31	19.84	24.90	6.58						
		2-Wire Voice Grade Port (Centrex / EBS-M5216))3 Basic Local Area			UEP9D	UEPYV	1.23	40.31	19.84	24.90	6.58						
		2-Wire Voice Grade Port (Centrex / EBS-M5316))3 Basic Local Area			UEP9D	UEPY3	1.23	40.31	19.84	24.90	6.58						
		2-Wire Voice Grade Port (Centrex with Caller ID) Basic Local Area			UEP9D	UEPYH	1.23	40.31	19.84	24.90	6.58						
		2-Wire Voice Grade Port (Centrex/Caller ID/Msg Wtg Lamp Indication))4 Basic Local Area			UEP9D	UEPYW	1.23	40.31	19.84	24.90	6.58						
		2-Wire Voice Grade Port (Centrex/Msg Wtg Lamp Indication))4 Basic Local Area			UEP9D	UEPYJ	1.23	40.31	19.84	24.90	6.58						
		2-Wire Voice Grade Port (Centrex from diff Serving Wire Center) 2,3-Basic Local Area			UEP9D	UEPYM	1.23	108.35	70.57	54.24	11.70						
		2-Wire Voice Grade Port (Centrex/differ SWC /EBS-PSET)2,3,4 Basic Local Area			UEP9D	UEPYO	1.23	108.35	70.57	54.24	11.70						
		2-Wire Voice Grade Port (Centrex/differ SWC /EBS-M5009)2,3,4 Basic Local Area			UEP9D	UEPYP	1.23	108.35	70.57	54.24	11.70						
		2-Wire Voice Grade Port (Centrex/differ SWC /EBS-5209)2,3,4 Basic Local Area			UEP9D	UEPYQ	1.23	108.35	70.57	54.24	11.70						
		2-Wire Voice Grade Port (Centrex/differ SWC /EBS-M5112)2,3,4 Basic Local Area			UEP9D	UEPYR	1.23	108.35	70.57	54.24	11.70						
		2-Wire Voice Grade Port (Centrex/differ SWC /EBS-M5312)2,3,4 Basic Local Area			UEP9D	UEPYS	1.23	108.35	70.57	54.24	11.70						

CATEGORY	RATE ELEMENTS	Interim	Zone	BCS	USOC	RATES ($)					Svc Order Submitted Elec per LSR	Svc Order Submitted Manually per LSR	Attachment: 2 Incremental Charge - Manual Svc Order vs. Electronic-1st	Attachment: 2 Incremental Charge - Manual Svc Order vs. Electronic-Add'l	Exhibit: A Incremental Charge - Manual Svc Order vs. Electronic-Disc 1st	Exhibit: A Incremental Charge - Manual Svc Order vs. Electronic-Disc Add'l
						Rec	Nonrecurring		Nonrecurring Disconnect		OSS Rates ($)					
							First	Add'l	First	Add'l	SOMEC	SOMAN	SOMAN	SOMAN	SOMAN	SOMAN
	2-Wire Voice Grade Port (Centrex/differ SWC /EBS-M5008)2,3,4 Basic Local Area			UEP9D	UEPY4	1.23	108.35	70.57	54.24	11.70						
	2-Wire Voice Grade Port (Centrex/differ SWC /EBS-M5208)2, 3 Basic Local Area			UEP9D	UEPY5	1.23	108.35	70.57	54.24	11.70						
	2-Wire Voice Grade Port (Centrex/differ SWC /EBS-M5216)2,3,4 Basic Local Area			UEP9D	UEPY6	1.23	108.35	70.57	54.24	11.70						
	2-Wire Voice Grade Port (Centrex/differ SWC /EBS-M5316)2,3,4 Basic Local Area			UEP9D	UEPY7	1.23	108.35	70.57	54.24	11.70						
	2-Wire Voice Grade Port, Diff Serving Wire Center - 800 Service Term 2,3			UEP9D	UEPYZ	1.23	108.35	70.57	54.24	11.70						
	2-Wire Voice Grade Port terminated in on Megalink or equivalent Basic Local Area			UEP9D	UEPY9	1.23	40.31	19.84	24.90	6.58						
	2-Wire Voice Grade Port Terminated on 800 Service Term Basic Local Area			UEP9D	UEPY2	1.23	40.31	19.84	24.90	6.58						
AL, KY, LA, MS, SC, & TN Only																
	2-Wire Voice Grade Port (Centrex)			UEP9D	UEPQA	1.23	40.31	19.84	24.90	6.58						
	2-Wire Voice Grade Port (Centrex 800 termination)			UEP9D	UEPQB	1.23	40.31	19.84	24.90	6.58						
	2-Wire Voice Grade Port (Centrex / EBS-PSET)4			UEP9D	UEPQC	1.23	40.31	19.84	24.90	6.58						
	2-Wire Voice Grade Port (Centrex / EBS-M5009)4			UEP9D	UEPQD	1.23	40.31	19.84	24.90	6.58						
	2-Wire Voice Grade Port (Centrex / EBS-M5209)4			UEP9D	UEPQE	1.23	40.31	19.84	24.90	6.58						
	2-Wire Voice Grade Port (Centrex / EBS-M5112)4			UEP9D	UEPQF	1.23	40.31	19.84	24.90	6.58						
	2-Wire Voice Grade Port (Centrex / EBS-M5312)4			UEP9D	UEPQG	1.23	40.31	19.84	24.90	6.58						
	2-Wire Voice Grade Port (Centrex / EBS-M5008)4			UEP9D	UEPQT	1.23	40.31	19.84	24.90	6.58						
	2-Wire Voice Grade Port (Centrex / EBS-M5208)4			UEP9D	UEPQU	1.23	40.31	19.84	24.90	6.58						
	2-Wire Voice Grade Port (Centrex / EBS-M5216)4			UEP9D	UEPQV	1.23	40.31	19.84	24.90	6.58						
	2-Wire Voice Grade Port (Centrex / EBS-M5316)4			UEP9D	UEPQ3	1.23	40.31	19.84	24.90	6.58						
	2-Wire Voice Grade Port (Centrex with Caller ID)			UEP9D	UEPQH	1.23	40.31	19.84	24.90	6.58						
	2-Wire Voice Grade Port (Centrex/Caller ID/Msg Wtg Lamp Indication)4			UEP9D	UEPQW	1.23	40.31	19.84	24.90	6.58						
	2-Wire Voice Grade Port (Centrex/Msg Wtg Lamp Indication)4			UEP9D	UEPQJ	1.23	40.31	19.84	24.90	6.58						
	2-Wire Voice Grade Port (Centrex from diff Serving Wire Center) 2,3			UEP9D	UEPQM	1.23	108.35	70.57	54.24	11.70						
	2-Wire Voice Grade Port (Centrex/differ SWC /EBS-PSET)2,3,4			UEP9D	UEPQO	1.23	108.35	70.57	54.24	11.70						
	2-Wire Voice Grade Port (Centrex/differ SWC /EBS-M5009)2,3,4			UEP9D	UEPQP	1.23	108.35	70.57	54.24	11.70						
	2-Wire Voice Grade Port (Centrex/differ SWC /EBS-5209)2,3,4			UEP9D	UEPQQ	1.23	108.35	70.57	54.24	11.70						
	2-Wire Voice Grade Port (Centrex/differ SWC /EBS-M5112)2,3,4			UEP9D	UEPQR	1.23	108.35	70.57	54.24	11.70						
	2-Wire Voice Grade Port (Centrex/differ SWC /EBS-M5312)2,3,4			UEP9D	UEPQS	1.23	108.35	70.57	54.24	11.70						
	2-Wire Voice Grade Port (Centrex/differ SWC /EBS-M5008)2,3,4			UEP9D	UEPQ4	1.23	108.35	70.57	54.24	11.70						
	2-Wire Voice Grade Port (Centrex/differ SWC /EBS-M5208)2,3,4			UEP9D	UEPQ5	1.23	108.35	70.57	54.24	11.70						
	2-Wire Voice Grade Port (Centrex/differ SWC /EBS-M5216)2,3,4			UEP9D	UEPQ6	1.23	108.35	70.57	54.24	11.70						
	2-Wire Voice Grade Port (Centrex/differ SWC /EBS-M5316)2,3,4			UEP9D	UEPQ7	1.23	108.35	70.57	54.24	11.70						
	2-Wire Voice Grade Port, Diff Serving Wire Center - 800 Service Term 2,3			UEP9D	UEPQZ	1.23	108.35	70.57	54.24	11.70						
	2-Wire Voice Grade Port terminated in on Megalink or equivalent			UEP9D	UEPQ9	1.23	40.31	19.84	24.90	6.58						
	2-Wire Voice Grade Port Terminated on 800 Service Term			UEP9D	UEPQ2	1.23	40.31	19.84	24.90	6.58						
Local Switching																
	Centrex Intercom Funtionality, per port			UEP9D	URECS	0.7947										
Local Number Portability																
	Local Number Portability (1 per port)			UEP9D	LNPCC	0.35										

CATEGORY	RATE ELEMENTS	Interim	Zone	BCS	USOC	RATES ($)					Svc Order Submitted Elec per LSR	Svc Order Submitted Manually per LSR	Attachment: 2 Incremental Charge - Manual Svc Order vs. Electronic-1st	Attachment: 2 Incremental Charge - Manual Svc Order vs. Electronic-Add'l	Exhibit: A Incremental Charge - Manual Svc Order vs. Electronic-Disc 1st	Exhibit: A Incremental Charge - Manual Svc Order vs. Electronic-Disc Add'l
						Rec	Nonrecurring		Nonrecurring Disconnect		OSS Rates ($)					
							First	Add'l	First	Add'l	SOMEC	SOMAN	SOMAN	SOMAN	SOMAN	SOMAN
Features																
	All Standard Features Offered, per port			UEP9D	UEPVF	2.56										
	All Select Features Offered, per port			UEP9D	UEPVS	0.00	404.98									
	All Centrex Control Features Offered, per port			UEP9D	UEPVC	2.56										
NARS																
	Unbundled Network Access Register - Combination			UEP9D	UARCX	0.00	0.00	0.00	0.00	0.00						
	Unbundled Network Access Register - Inward			UEP9D	UAR1X	0.00	0.00	0.00	0.00	0.00						
	Unbundled Network Access Register - Outdial			UEP9D	UAROX	0.00	0.00	0.00	0.00	0.00						
Miscellaneous Terminations																
2-Wire Trunk Side																
	Trunk Side Terminations, each			UEP9D	CEND6	8.25	120.00	18.85	61.77	3.88						
4-Wire Digital (1.544 Megabits)																
	DS1 Circuit Terminations, each			UEP9D	M1HD1	58.41	203.19	96.25	74.86	2.54						
	DS0 Channels Activiated per Channel			UEP9D	M1HDO	0.00	14.56									
Interoffice Channel Mileage - 2-Wire																
	Interoffice Channel Facilities Termination			UEP9D	M1GBC	22.52	40.77	27.57	17.26	7.11						
	Interoffice Channel mileage, per mile or fraction of mile			UEP9D	M1GBM	0.0098										
Feature Activations (DS0) Centrex Loops on Channelized DS1 Service																
D4 Channel Bank Feature Activations																
	Feature Activation on D-4 Channel Bank Centrex Loop Slot			UEP9D	1PQWS	0.57										
	Feature Activation on D-4 Channel Bank FX line Side Loop Slot			UEP9D	1PQW6	0.57										
	Feature Activation on D-4 Channel Bank FX Trunk Side Loop Slot			UEP9D	1PQW7	0.57										
	Feature Activation on D-4 Channel Bank Centrex Loop Slot - Different Wire Center			UEP9D	1PQWP	0.57										
	Feature Activation on D-4 Channel Bank Private Line Loop Slot			UEP9D	1PQWV	0.57										
	Feature Activation on D-4 Channel Bank Tjie Line/Trunk Loop Slot			UEP9D	1PQWQ	0.57										
	Feature Activation on D-4 Channel Bank WATS Loop Slot			UEP9D	1PQWA	0.57										
Non-Recurring Charges (NRC) Associated with UNE-P Centrex																
	NRC Conversion Currently Combined Switch-As-Is with allowed changes, per port			UEP9D	USAC2		0.10	0.10								
	Conversion of existing Centrex Common Block, each			UEP9D	USACN		37.97	16.68								
	New Centrex Standard Common Block			UEP9D	M1ACS	0.00	666.32									
	New Centrex Customized Common Block			UEP9D	M1ACC	0.00	666.32									
	NAR Establishment Charge, Per Occasion			UEP9D	URECA	0.00	72.63									
Additional Non-Recurring Charges (NRC)																
	Unbundled Miscellaneous Rate Element, Tag Loop at End Use Premise			UEP9D	URETL		8.33	0.83								
	Unbundled Miscellaneous Rate Element, Tag Design Loop at End Use Premise			UEP9D	URETN		11.19	1.10								
UNE-P CENTREX - EWSD (Valid in AL, FL, KY, LA, MS & TN)																
2-Wire VG Loop/2-Wire Voice Grade Port (Centrex) Combo																
UNE Port/Loop Combination Rates (Non-Design)																
	2-Wire VG Loop/2-Wire Voice Grade Port (Centrex) Port Combo - Non-Design		1	UEP9E		12.22										
	2-Wire VG Loop/2-Wire Voice Grade Port (Centrex)Port Combo - Non-Design		2	UEP9E		17.13										
	2-Wire VG Loop/2-Wire Voice Grade Port (Centrex)Port Combo - Non-Design		3	UEP9E		26.26										
	2-Wire VG Loop/2-Wire Voice Grade Port (Centrex) Port Combo - Non-Design		4	UEP9E		44.91										
UNE Port/Loop Combination Rates (Design)																
	2-Wire VG Loop/2-Wire Voice Grade Port (Centrex) Port Combo - Design		1	UEP9E		15.12										
	2-Wire VG Loop/2-Wire Voice Grade Port (Centrex)Port Combo - Design		2	UEP9E		19.98										

CATEGORY	RATE ELEMENTS	Interim	Zone	BCS	USOC	RATES ($)					Svc Order Submitted Elec per LSR	Svc Order Submitted Manually per LSR	Attachment: 2 Incremental Charge - Manual Svc Order vs. Electronic-1st	Attachment: 2 Incremental Charge - Manual Svc Order vs. Electronic-Add'l	Exhibit: A Incremental Charge - Manual Svc Order vs. Electronic-Disc 1st	Exhibit: A Incremental Charge - Manual Svc Order vs. Electronic-Disc Add'l
						Rec	Nonrecurring		Nonrecurring Disconnect		OSS Rates ($)					
							First	Add'l	First	Add'l	SOMEC	SOMAN	SOMAN	SOMAN	SOMAN	SOMAN
	2-Wire VG Loop/2-Wire Voice Grade Port (Centrex)Port Combo - Design		3	UEP9E		28.78										
	2-Wire VG Loop/2-Wire Voice Grade Port (Centrex) Port Combo - Design		4	UEP9E		46.95										
UNE Loop Rate																
	2-Wire Voice Grade Loop (SL 1) - Zone 1		1	UEP9E	UECS1	10.98										
	2-Wire Voice Grade Loop (SL 1) - Zone 2		2	UEP9E	UECS1	15.91										
	2-Wire Voice Grade Loop (SL 1) - Zone 3		3	UEP9E	UECS1	25.04										
	2-Wire Voice Grade Loop (SL 1) - Zone 4		4	UEP9E	UECS1	43.68										
	2-Wire Voice Grade Loop (SL 2) - Zone 1		1	UEP9E	UECS2	13.89										
	2-Wire Voice Grade Loop (SL 2) - Zone 2		2	UEP9E	UECS2	18.75										
	2-Wire Voice Grade Loop (SL 2) - Zone 3		3	UEP9E	UECS2	27.55										
	2-Wire Voice Grade Loop (SL 2) - Zone 4		4	UEP9E	UECS2	45.72										
UNE Port Rate																
AL, FL, KY, LA, MS, & TN only																
	2-Wire Voice Grade Port (Centrex) Basic Local Area			UEP9E	UEPYA	1.23	40.31	19.84	24.90	6.58						
	2-Wire Voice Grade Port (Centrex 800 termination)Basic Local Area			UEP9E	UEPYB	1.23	40.31	19.84	24.90	6.58						
	2-Wire Voice Grade Port (Centrex with Caller ID)1Basic Local Area			UEP9E	UEPYH	1.23	40.31	19.84	24.90	6.58						
	2-Wire Voice Grade Port (Centrex from diff Serving Wire Center)2,3 Basic Local Area			UEP9E	UEPYM	1.23	108.35	70.57	54.24	11.70						
	2-Wire Voice Grade Port, Diff Serving Wire Center 2,3 - 800 Service Term - Basic Local Area			UEP9E	UEPYZ	1.23	108.35	70.57	54.24	11.70						
	2-Wire Voice Grade Port terminated in on Megalink or equivalent - Basic Local Area			UEP9E	UEPY9	1.23	40.31	19.84	24.90	6.58						
	2-Wire Voice Grade Port Terminated on 800 Service Term - Basic Local Area			UEP9E	UEPY2	1.23	40.31	19.84	24.90	6.58						
AL, KY, LA, MS, & TN Only																
	2-Wire Voice Grade Port (Centrex)			UEP9E	UEPQA	1.23	40.31	19.84	24.90	6.58						
	2-Wire Voice Grade Port (Centrex 800 termination)			UEP9E	UEPQB	1.23	40.31	19.84	24.90	6.58						
	2-Wire Voice Grade Port (Centrex with Caller ID)1			UEP9E	UEPQH	1.23	40.31	19.84	24.90	6.58						
	2-Wire Voice Grade Port (Centrex from diff Serving Wire Center)2,3			UEP9E	UEPQM	1.23	108.35	70.57	54.24	11.70						
	2-Wire Voice Grade Port, Diff Serving Wire Center 2,3 - 800 Service Term			UEP9E	UEPQZ	1.23	108.35	70.57	54.24	11.70						
	2-Wire Voice Grade Port terminated in on Megalink or equivalent			UEP9E	UEPQ9	1.23	40.31	19.84	24.90	6.58						
	2-Wire Voice Grade Port Terminated on 800 Service Term			UEP9E	UEPQ2	1.23	40.31	19.84	24.90	6.58						
Local Switching																
	Centrex Intercom Funtionality, per port			UEP9E	URECS	0.7947										
Local Number Portability																
	Local Number Portability (1 per port)			UEP9E	LNPCC	0.35										
Features																
	All Standard Features Offered, per port			UEP9E	UEPVF	2.56										
	All Select Features Offered, per port			UEP9E	UEPVS	0.00	404.98									
	All Centrex Control Features Offered, per port			UEP9E	UEPVC	2.56										
NARS																
	Unbundled Network Access Register - Combination			UEP9E	UARCX	0.00	0.00	0.00	0.00	0.00						
	Unbundled Network Access Register - Indial			UEP9E	UAR1X	0.00	0.00	0.00	0.00	0.00						
	Unbundled Network Access Register - Outdial			UEP9E	UAROX	0.00	0.00	0.00	0.00	0.00						
Miscellaneous Terminations																
2-Wire Trunk Side																
	Trunk Side Terminations, each			UEP9E	CEND6	8.25	120.00	18.85	61.77	3.88						
4-Wire Digital (1.544 Megabits)																
	DS1 Circuit Terminations, each			UEP9E	M1HD1	58.41	203.19	96.25	74.86	2.54						
	DS0 Channel Activated Per Channel			UEP9E	M1HDO	0.00	14.56									
Interoffice Channel Mileage - 2-Wire																
	Interoffice Channel Facilities Termination			UEP9E	M1GBC	22.52	40.77	27.57	17.26	7.11						

CATEGORY	RATE ELEMENTS	Interim	Zone	BCS	USOC	RATES ($)					Svc Order Submitted Elec per LSR	Svc Order Submitted Manually per LSR	Attachment: 2 Incremental Charge - Manual Svc Order vs. Electronic-1st	Attachment: 2 Incremental Charge - Manual Svc Order vs. Electronic-Add'l	Exhibit: A Incremental Charge - Manual Svc Order vs. Electronic-Disc 1st	Exhibit: A Incremental Charge - Manual Svc Order vs. Electronic-Disc Add'l
						Rec	Nonrecurring		Nonrecurring Disconnect		OSS Rates ($)					
							First	Add'l	First	Add'l	SOMEC	SOMAN	SOMAN	SOMAN	SOMAN	SOMAN
	Interoffice Channel mileage, per mile or fraction of mile			UEP9E	M1GBM	0.0098										
Feature Activations (DS0) Centrex Loops on Channelized DS1 Service																
D4 Channel Bank Feature Activations																
	Feature Activation on D-4 Channel Bank Centrex Loop Slot			UEP9E	1PQWS	0.57										
	Feature Activation on D-4 Channel Bank FX line Side Loop Slot			UEP9E	1PQW6	0.57										
	Feature Activation on D-4 Channel Bank FX Trunk Side Loop Slot			UEP9E	1PQW7	0.57										
	Feature Activation on D-4 Channel Bank Centrex Loop Slot - Different Wire Center			UEP9E	1PQWP	0.57										
	Feature Activation on D-4 Channel Bank Private Line Loop Slot			UEP9E	1PQWV	0.57										
	Feature Activation on D-4 Channel Bank Tjie Line/Trunk Loop Slot			UEP9E	1PQWQ	0.57										
	Feature Activation on D-4 Channel Bank WATS Loop Slot			UEP9E	1PQWA	0.57										
Non-Recurring Charges (NRC) Associated with UNE-P Centrex																
	NRC Conversion Currently Combined Switch-As-Is with allowed changes, per port			UEP9E	USAC2		0.10	0.10								
	Conversion of Existing Centrex Common Block, each			UEP9E	USACN		37.97	16.68								
	New Centrex Standard Common Block			UEP9E	M1ACS	0.00	666.32									
	New Centrex Customized Common Block			UEP9E	M1ACC	0.00	666.32									
	NAR Establishment Charge, Per Occasion			UEP9E	URECA	0.00	72.63									
Additional Non-Recurring Charges (NRC)																
	Unbundled Miscellaneous Rate Element, Tag Loop at End Use Premise			UEP9E	URETL		8.33	0.83								
	Unbundled Miscellaneous Rate Element, Tag Design Loop at End Use Premise			UEP9E	URETN		11.19	1.10								
UNE-P CENTREX - DCO - Valid in AL, KY, LA, MS, & TN)																
2-Wire VG Loop/2-Wire Voice Grade Port (Centrex) Combo																
UNE Port/Loop Combination Rates (Non-Design)																
	2-Wire VG Loop/2-Wire Voice Grade Port (Centrex) Port Combo - Non-Design		1	UEP93		12.22										
	2-Wire VG Loop/2-Wire Voice Grade Port (Centrex)Port Combo - Non-Design		2	UEP93		17.13										
	2-Wire VG Loop/2-Wire Voice Grade Port (Centrex)Port Combo - Non-Design		3	UEP93		26.26										
	2-Wire VG Loop/2-Wire Voice Grade Port (Centrex) Port Combo - Non-Design		4	UEP93		44.91										
UNE Port/Loop Combination Rates (Design)																
	2-Wire VG Loop/2-Wire Voice Grade Port (Centrex) Port Combo - Design		1	UEP93		15.12										
	2-Wire VG Loop/2-Wire Voice Grade Port (Centrex)Port Combo - Design		2	UEP93		19.98										
	2-Wire VG Loop/2-Wire Voice Grade Port (Centrex)Port Combo - Design		3	UEP93		28.78										
	2-Wire VG Loop/2-Wire Voice Grade Port (Centrex) Port Combo - Design		4	UEP93		46.95										
UNE Loop Rate																
	2-Wire Voice Grade Loop (SL 1) - Zone 1		1	UEP93	UECS1	10.98										
	2-Wire Voice Grade Loop (SL 1) - Zone 2		2	UEP93	UECS1	15.91										
	2-Wire Voice Grade Loop (SL 1) - Zone 3		3	UEP93	UECS1	25.04										
	2-Wire Voice Grade Loop (SL 1) - Zone 4		4	UEP93	UECS1	43.68										
	2-Wire Voice Grade Loop (SL 2) - Zone 1		1	UEP93	UECS2	13.89										
	2-Wire Voice Grade Loop (SL 2) - Zone 2		2	UEP93	UECS2	18.75										
	2-Wire Voice Grade Loop (SL 2) - Zone 3		3	UEP93	UECS2	27.55										
	2-Wire Voice Grade Loop (SL 2) - Zone 4		4	UEP93	UECS2	45.72										
UNE Port Rate																
AL, KY, LA, MS, & TN only																
	2-Wire Voice Grade Port (Centrex) Basic Local Area			UEP93	UEPYA	1.23	40.31	19.84	24.90	6.58						

CATEGORY	RATE ELEMENTS	Interim	Zone	BCS	USOC	RATES ($) Rec	Nonrecurring First	Nonrecurring Add'l	Nonrecurring Disconnect First	Nonrecurring Disconnect Add'l	Svc Order Submitted Elec per LSR SOMEC	Svc Order Submitted Manually per LSR SOMAN	Attachment: 2 Incremental Charge - Manual Svc Order vs. Electronic-1st SOMAN	Attachment: 2 Incremental Charge - Manual Svc Order vs. Electronic-Add'l SOMAN	Exhibit: A Incremental Charge - Manual Svc Order vs. Electronic-Disc 1st SOMAN	Exhibit: A Incremental Charge - Manual Svc Order vs. Electronic-Disc Add'l SOMAN
							OSS Rates ($)									
	2-Wire Voice Grade Port (Centrex 800 termination)Basic Local Area			UEP93	UEPYB	1.23	40.31	19.84	24.90	6.58						
	2-Wire Voice Grade Port (Centrex with Caller ID)1Basic Local Area			UEP93	UEPYH	1.23	40.31	19.84	24.90	6.58						
	2-Wire Voice Grade Port (Centrex from diff Serving Wire Center)2,3 Basic Local Area			UEP93	UEPYM	1.23	108.35	70.57	54.24	11.70						
	2-Wire Voice Grade Port, Diff Serving Wire Center - 2,3 - 800 Service Term - Basic Local Area			UEP93	UEPYZ	1.23	108.35	70.57	54.24	11.70						
	2-Wire Voice Grade Port terminated in on Megalink or equivalent - Basic Local Area			UEP93	UEPY9	1.23	40.31	19.84	24.90	6.58						
	2-Wire Voice Grade Port Terminated on 800 Service Term - Basic Local Area			UEP93	UEPY2	1.23	40.31	19.84	24.90	6.58						
	2-Wire Voice Grade Port (Centrex)			UEP93	UEPQA	1.23	40.31	19.84	24.90	6.58						
	2-Wire Voice Grade Port (Centrex 800 termination)			UEP93	UEPQB	1.23	40.31	19.84	24.90	6.58						
	2-Wire Voice Grade Port (Centrex with Caller ID)1			UEP93	UEPQH	1.23	40.31	19.84	24.90	6.58						
	2-Wire Voice Grade Port (Centrex from diff Serving Wire Center)2,3			UEP93	UEPQM	1.23	108.35	70.57	54.24	11.70						
	2-Wire Voice Grade Port, Diff Serving Wire Center - 2,3 -800 Service Term			UEP93	UEPQZ	1.23	108.35	70.57	54.24	11.70						
	2-Wire Voice Grade Port terminated in on Megalink or equivalent			UEP93	UEPQ9	1.23	40.31	19.84	24.90	6.58						
	2-Wire Voice Grade Port Terminated on 800 Service Term			UEP93	UEPQ2	1.23	40.31	19.84	24.90	6.58						
Local Switching																
	Centrex Intercom Funtionality, per port			UEP93	URECS	0.7947										
Local Number Portability																
	Local Number Portability (1 per port)			UEP93	LNPCC	0.35										
Features																
	All Standard Features Offered, per port			UEP93	UEPVF	2.56										
	All Centrex Control Features Offered, per port			UEP93	UEPVC	2.56										
NARS																
	Unbundled Network Access Register - Combination			UEP93	UARCX	0.00	0.00	0.00	0.00	0.00						
	Unbundled Network Access Register - Indial			UEP93	UAR1X	0.00	0.00	0.00	0.00	0.00						
	Unbundled Network Access Register - Outdial			UEP93	UAROX	0.00	0.00	0.00	0.00	0.00						
Miscellaneous Terminations																
2-Wire Trunk Side																
	Trunk Side Terminations, each			UEP93	CEND6	8.25	120.00	18.85	61.77	3.88						
4-Wire Digital (1.544 Megabits)																
	DS1 Circuit Terminations, each			UEP93	M1HD1	58.41	203.19	96.25	74.86	2.54						
	DS0 Channels Activated, Per Channel			UEP93	M1HDO	0.00	14.56									
Interoffice Channel Mileage - 2-Wire																
	Interoffice Channel Facilities Termination			UEP93	M1GBC	22.52	40.77	27.57	17.26	7.11						
	Interoffice Channel mileage, per mile or fraction of mile			UEP93	M1GBM	0.0098										
Feature Activations (DS0) Centrex Loops on Channelized DS1 Service																
D4 Channel Bank Feature Activations																
	Feature Activation on D-4 Channel Bank Centrex Loop Slot			UEP93	1PQWS	0.57										
	Feature Activation on D-4 Channel Bank FX Line Side Loop Slot			UEP93	1PQW6	0.57										
	Feature Activation on D-4 Channel Bank FX Trunk Side Loop Slot			UEP93	1PQW7	0.57										
	Feature Activation on D-4 Channel Bank Centrex Loop Slot - Different Wire Center			UEP93	1PQWP	0.57										
	Feature Activation on D-4 Channel Bank Private Line Loop Slot			UEP93	1PQWV	0.57										
	Feature Activation on D-4 Channel Bank Tie Line/Trunk Loop Slot			UEP93	1PQWQ	0.57										
	Feature Activation on D-4 Channel Bank WATS Loop Slot			UEP93	1PQWA	0.57										
Non-Recurring Charges (NRC) Associated with UNE-P Centrex																
	NRC Conversion Currently Combined Switch-As-Is with allowed changes, per port			UEP93	USAC2		0.10	0.10								

UNBUNDLED NETWORK ELEMENTS - Mississippi													Attachment: 2		Exhibit: A	
CATEGORY		RATE ELEMENTS	Interim	Zone	BCS	USOC	RATES ($)					Svc Order Submitted Elec per LSR	Svc Order Submitted Manually per LSR	Incremental Charge - Manual Svc Order vs. Electronic-1st	Incremental Charge - Manual Svc Order vs. Electronic-Add'l	Incremental Charge - Manual Svc Order vs. Electronic-Disc 1st	Incremental Charge - Manual Svc Order vs. Electronic-Disc Add'l
							Rec	Nonrecurring		Nonrecurring Disconnect		OSS Rates ($)					
								First	Add'l	First	Add'l	SOMEC	SOMAN	SOMAN	SOMAN	SOMAN	SOMAN
		Conversion of Existing Centrex Common Block, each			UEP93	USACN		37.97	16.68								
		New Centrex Standard Common Block			UEP93	M1ACS	0.00	666.32									
		New Centrex Customized Common Block			UEP93	M1ACC	0.00	666.32									
		NAR Establishment Charge, Per Occasion			UEP93	URECA	0.00	72.63									
	Additional Non-Recurring Charges (NRC)																
		Unbundled Miscellaneous Rate Element, Tag Loop at End Use Premise			UEP93	URETL		8.33	0.83								
		Unbundled Miscellaneous Rate Element, Tag Design Loop at End Use Premise			UEP93	URETN		11.19	1.10								
	Note 1 - Required Port for Centrex Control in 1AESS, 5ESS & EWSD																
	Note 2 - Requres Interoffice Channel Mileage																
	Note 3 - Installation is combination of Installation charge for SL2 Loop and Port																
	Note 4 - Requires Specific Customer Premises Equipment																
	Note: Rates displaying an "R" in Interim column are interim and subject to rate true-up as set forth in General Terms and Conditions.																

UNBUNDLED NETWORK ELEMENTS - North Carolina														Attachment: 2		Exhibit: A	
CATEGORY	RATE ELEMENTS	Interim	Zone	BCS	USOC	RATES ($)					Svc Order Submitted Elec per LSR	Svc Order Submitted Manually per LSR	Incremental Charge - Manual Svc Order vs. Electronic-1st	Incremental Charge - Manual Svc Order vs. Electronic-Add'l	Incremental Charge - Manual Svc Order vs. Electronic-Disc 1st	Incremental Charge - Manual Svc Order vs. Electronic-Disc Add'l
						Rec	Nonrecurring		Nonrecurring Disconnect		OSS Rates ($)					
							First	Add'l	First	Add'l	SOMEC	SOMAN	SOMAN	SOMAN	SOMAN	SOMAN
	The "Zone" shown in the sections for stand-alone loops or loops as part of a combination refers to Geographically Deaveraged UNE Zones. To view Geographically Deaveraged UNE Zone Designations by Central Office, refer to internet Website: http://www.interconnection.bellsouth.com/become_a_clec/html/interconnection.htm															
OPERATIONAL SUPPORT SYSTEMS (OSS) - "REGIONAL RATES"																
	NOTE: (1) CLEC should contact its contract negotiator if it prefers the "state specific" OSS charges as ordered by the State Commissions. The OSS charges currently contained in this rate exhibit are the BellSouth "regional" service ordering charges. CLEC may elect either the state specific Commission ordered rates for the service ordering charges, or CLEC may elect the regional service ordering charge, however, CLEC can not obtain a mixture of the two regardless if CLEC has a interconnection contract established in each of the 9 states.															
	NOTE: (2) Any element that can be ordered electronically will be billed according to the SOMEC rate listed in this category. Please refer to BellSouth's Local Ordering Handbook (LOH) to determine if a product can be ordered electronically. For those elements that cannot be ordered electronically at present per the LOH, the listed SOMEC rate in this category reflects the charge that would be billed to a CLEC once electronic ordering capabilities come on-line for that element. Otherwise, the manual ordering charge, SOMAN, will be applied to a CLECs bill when it submits an LSR to BellSouth.															
	NOTE: (3) OSS - Manual Service Order Charge, Per Element - UNE Only **Please see applicable rate element for SOMAN charge**															
	OSS - Electronic Service Order Charge, Per Local Service Request (LSR) - UNE Only				SOMEC		3.50	0.00	3.50	0.00						
UNE SERVICE DATE ADVANCEMENT CHARGE																
	NOTE: The Expedite charge will be maintained commensurate with BellSouth's FCC No.1 Tariff, Section 5 as applicable.															
	UNE Expedite Charge per Circuit or Line Assignable USOC, per Day			UAL, UEANL, UCL, UEF, UDF, UEQ, UDL, UENTW, UDN, UEA, UHL, ULC, USL, U1T12, U1T48, U1TD1, U1TD3, U1TDX, U1TO3, U1TS1, U1TVX, UC1BC, UC1BL, UC1CC, UC1CL, UC1DC, UC1DL, UC1EC, UC1EL, UC1FC, UC1FL, UC1GC, UC1GL, UC1HC, UC1HL, UDL12, UDL48, UDLO3, UDLSX, UE3, ULD12, ULD48, ULDD1, ULDD3, ULDDX, ULDO3, ULDS1, ULDVX, UNC1X, UNC3X, UNCDX, UNCNX, UNCSX, UNCVX, UNLD1, UNLD3, UXTD1, UXTD3, UXTS1, U1TUC, U1TUD, U1TUB, U1TUA	SDASP		200.00									
UNBUNDLED EXCHANGE ACCESS LOOP																
	2-WIRE ANALOG VOICE GRADE LOOP															
	2-Wire Analog Voice Grade Loop - Service Level 1- Zone 1		1	UEANL	UEAL2	12.11	57.99	42.37					26.94	12.76	0.00	0.00
	2-Wire Analog Voice Grade Loop - Service Level 1- Zone 2		2	UEANL	UEAL2	21.24	57.99	42.37					26.94	12.76	0.00	0.00
	2-Wire Analog Voice Grade Loop - Service Level 1- Zone 3		3	UEANL	UEAL2	33.65	57.99	42.37					26.94	12.76	0.00	0.00
	2-Wire Analog Voice Grade Loop - Service Level 1- Zone 1		1	UEANL	UEASL	12.11	57.99	42.37					26.94	12.76	0.00	0.00
	2-Wire Analog Voice Grade Loop - Service Level 1- Zone 2		2	UEANL	UEASL	21.24	57.99	42.37					26.94	12.76	0.00	0.00
	2-Wire Analog Voice Grade Loop - Service Level 1- Zone 3		3	UEANL	UEASL	33.65	57.99	42.37					26.94	12.76	0.00	0.00
	Unbundled Miscellaneous Rate Element, Tag Loop at End User Premise			UEANL	URETL		8.33	0.83					26.94	12.76	0.00	0.00
	Loop Testing - Basic 1st Half Hour			UEANL	URET1		76.24	76.24					26.94	12.76	0.00	0.00
	Loop Testing - Basic Additional Half Hour			UEANL	URETA		39.51	39.51					26.94	12.76	0.00	0.00
	CLEC to CLEC Conversion Charge Without Outside Dispatch (UVL-SL1)			UEANL	UREWO		15.76	8.93					26.94	12.76	0.00	0.00

UNBUNDLED NETWORK ELEMENTS - North Carolina														Attachment: 2		Exhibit: A	
CATEGORY		RATE ELEMENTS	Interim	Zone	BCS	USOC	RATES ($)					Svc Order Submitted Elec per LSR	Svc Order Submitted Manually per LSR	Incremental Charge - Manual Svc Order vs. Electronic-1st	Incremental Charge - Manual Svc Order vs. Electronic-Add'l	Incremental Charge - Manual Svc Order vs. Electronic-Disc 1st	Incremental Charge - Manual Svc Order vs. Electronic-Disc Add'l
							Rec	Nonrecurring		Nonrecurring Disconnect		OSS Rates ($)					
								First	Add'l	First	Add'l	SOMEC	SOMAN	SOMAN	SOMAN	SOMAN	SOMAN
		Unbundled Voice Loop, Non-Design Voice Loop, billing for BST providing make-up (Engineering Information - E.I.)			UEANL	UEANM		28.74	28.74								
		Manual Order Coordination for UVL-SL1s (per loop)			UEANL	UEAMC		61.38	61.38								
		Order Coordination for Specified Conversion Time for UVL-SL1 (per LSR)			UEANL	OCOSL		45.34	45.34								
	2-WIRE Unbundled COPPER LOOP																
		2-Wire Unbundled Copper Loop - Non-Designed Zone 1		1	UEQ	UEQ2X	10.16	35.27	15.60					26.94	12.76	0.00	0.00
		2 Wire Unbundled Copper Loop - Non-Designed - Zone 2		2	UEQ	UEQ2X	17.55	35.27	15.60					26.94	12.76	0.00	0.00
		2 Wire Unbundled Copper Loop - Non-Designed - Zone 3		3	UEQ	UEQ2X	27.58	35.27	15.60					26.94	12.76	0.00	0.00
		Unbundled Miscellaneous Rate Element, Tag Loop at End User Premise			UEQ	URETL		8.33	0.83					26.94	12.76	0.00	0.00
		Manual Order Coordination 2 Wire Unbundled Copper Loop - Non-Designed (per loop)			UEQ	USBMC		61.38	61.38								
		Unbundled Copper Loop, Non-Design Copper Loop, billing for BST providing make-up (Engineering Information - E.I.)			UEQ	UEQMU		28.74	28.74					26.94	12.76	0.00	0.00
		Loop Testing - Basic 1st Half Hour			UEQ	URET1		76.24	76.24					26.94	12.76	0.00	0.00
		Loop Testing - Basic Additional Half Hour			UEQ	URETA		39.51	39.51					26.94	12.76	0.00	0.00
		CLEC to CLEC Conversion Charge Without Outside Dispatch (UCL-ND)			UEQ	UREWO		14.26	7.42					26.94	12.76	0.00	0.00
UNBUNDLED EXCHANGE ACCESS LOOP																	
	2-WIRE ANALOG VOICE GRADE LOOP																
		2 Wire Analog Voice Grade Loop-Service Level 1-Line Splitting-Zone 1		1	UEPSR UEPSB	UEALS	12.11	57.99	42.37	0.00	0.00			26.94	12.76		
		2 Wire Analog Voice Grade Loop-Service Level 1-Line Splitting-Zone 1		1	UEPSR UEPSB	UEABS	12.11	57.99	42.37	0.00	0.00			26.94	12.76		
		2 Wire Analog Voice Grade Loop- Service Level 1-Line Splitting-Zone 2		2	UEPSR UEPSB	UEALS	21.24	57.99	42.37	0.00	0.00			26.94	12.76		
		2 Wire Analog Voice Grade Loop- Service Level 1-Line Splitting-Zone 2		2	UEPSR UEPSB	UEABS	21.24	57.99	42.37	0.00	0.00			26.94	12.76		
		2 Wire Analog Voice Grade Loop-Service Level 1-Line Splitting-Zone 3		3	UEPSR UEPSB	UEALS	33.65	57.99	42.37	0.00	0.00			26.94	12.76		
		2 Wire Analog Voice Grade Loop-Service Level 1-Line Splitting-Zone 3		3	UEPSR UEPSB	UEABS	33.65	57.99	42.37	0.00	0.00			26.94	12.76		
UNBUNDLED EXCHANGE ACCESS LOOP																	
	2-WIRE ANALOG VOICE GRADE LOOP																
		2-Wire Analog Voice Grade Loop - Service Level 2 w/Loop or Ground Start Signaling - Zone 1		1	UEA	UEAL2	14.97	142.97	106.56					26.94	12.76	0.00	0.00
		2-Wire Analog Voice Grade Loop - Service Level 2 w/Loop or Ground Start Signaling - Zone 2		2	UEA	UEAL2	25.93	142.97	106.56					26.94	12.76	0.00	0.00
		2-Wire Analog Voice Grade Loop - Service Level 2 w/Loop or Ground Start Signaling - Zone 3		3	UEA	UEAL2	40.81	142.97	106.56					26.94	12.76	0.00	0.00
		Order Coordination for Specified Conversion Time (per LSR)			UEA	OCOSL		45.34									
		2-Wire Analog Voice Grade Loop - Service Level 2 w/Reverse Battery Signaling - Zone 1		1	UEA	UEAR2	14.97	142.97	106.56					26.94	12.76	0.00	0.00
		2-Wire Analog Voice Grade Loop - Service Level 2 w/Reverse Battery Signaling - Zone 2		2	UEA	UEAR2	25.93	142.97	106.56					26.94	12.76	0.00	0.00
		2-Wire Analog Voice Grade Loop - Service Level 2 w/Reverse Battery Signaling - Zone 3		3	UEA	UEAR2	40.81	142.97	106.56					26.94	12.76	0.00	0.00
		Order Coordination for Specified Conversion Time (per LSR)			UEA	OCOSL		45.34									
		CLEC to CLEC Conversion Charge without outside dispatch			UEA	UREWO		87.64	36.33					26.94	12.76	0.00	0.00
		Loop Tagging - Service Level 2 (SL2)			UEA	URETL		11.20	1.10					26.94	12.76	0.00	0.00
	4-WIRE ANALOG VOICE GRADE LOOP																
		4-Wire Analog Voice Grade Loop - Zone 1		1	UEA	UEAL4	21.32	288.47	237.45					26.94	12.76	0.00	0.00
		4-Wire Analog Voice Grade Loop - Zone 2		2	UEA	UEAL4	36.27	288.47	237.45					26.94	12.76	0.00	0.00
		4-Wire Analog Voice Grade Loop - Zone 3		3	UEA	UEAL4	56.57	288.47	237.45					26.94	12.76	0.00	0.00
		Order Coordination for Specified Conversion Time (per LSR)			UEA	OCOSL		45.34									
		CLEC to CLEC Conversion Charge without outside dispatch			UEA	UREWO		87.64	36.33					26.94	12.76	0.00	0.00
	2-WIRE ISDN DIGITAL GRADE LOOP																
		2-Wire ISDN Digital Grade Loop - Zone 1		1	UDN	U1L2X	19.42	325.91	251.31					26.94	12.76	0.00	0.00

UNBUNDLED NETWORK ELEMENTS - North Carolina													Attachment: 2		Exhibit: A	
CATEGORY	RATE ELEMENTS	Interim	Zone	BCS	USOC	RATES ($)					Svc Order Submitted Elec per LSR	Svc Order Submitted Manually per LSR	Incremental Charge - Manual Svc Order vs. Electronic-1st	Incremental Charge - Manual Svc Order vs. Electronic-Add'l	Incremental Charge - Manual Svc Order vs. Electronic-Disc 1st	Incremental Charge - Manual Svc Order vs. Electronic-Disc Add'l
						Rec	Nonrecurring		Nonrecurring Disconnect		OSS Rates ($)					
							First	Add'l	First	Add'l	SOMEC	SOMAN	SOMAN	SOMAN	SOMAN	SOMAN
	2-Wire ISDN Digital Grade Loop - Zone 2		2	UDN	U1L2X	32.88	325.91	251.31					26.94	12.76	0.00	0.00
	2-Wire ISDN Digital Grade Loop - Zone 3		3	UDN	U1L2X	51.14	325.91	251.31					26.94	12.76	0.00	0.00
	Order Coordination For Specified Conversion Time (per LSR)			UDN	OCOSL		45.34									
	CLEC to CLEC Conversion Charge without outside dispatch			UDN	UREWO		91.55	44.12					26.94	12.76	0.00	0.00
2-WIRE ASYMMETRICAL DIGITAL SUBSCRIBER LINE (ADSL) COMPATIBLE LOOP																
	2 Wire Unbundled ADSL Loop including manual service inquiry & facility reservation - Zone 1		1	UAL	UAL2X	11.00	264.71	145.60					26.94	12.76	0.00	0.00
	2 Wire Unbundled ADSL Loop including manual service inquiry & facility reservation - Zone 2		2	UAL	UAL2X	18.39	264.71	145.60					26.94	12.76	0.00	0.00
	2 Wire Unbundled ADSL Loop including manual service inquiry & facility reservation - Zone 3		3	UAL	UAL2X	28.42	264.71	145.60					26.94	12.76	0.00	0.00
	Order Coordination for Specified Conversion Time (per LSR)			UAL	OCOSL		45.34									
	2 Wire Unbundled ADSL Loop without manual service inquiry & facility reservaton - Zone 1		1	UAL	UAL2W	11.00	190.25	114.82					26.94	12.76	0.00	0.00
	2 Wire Unbundled ADSL Loop without manual service inquiry & facility reservaton - Zone 2		2	UAL	UAL2W	18.39	190.25	114.82					26.94	12.76	0.00	0.00
	2 Wire Unbundled ADSL Loop without manual service inquiry & facility reservaton - Zone 3		3	UAL	UAL2W	28.42	190.25	114.82					26.94	12.76	0.00	0.00
	Order Coordination for Specified Conversion Time (per LSR)			UAL	OCOSL		45.34									
	CLEC to CLEC Conversion Charge without outside dispatch			UAL	UREWO		86.12	40.36					26.94	12.76	0.00	0.00
2-WIRE HIGH BIT RATE DIGITAL SUBSCRIBER LINE (HDSL) COMPATIBLE LOOP																
	2 Wire Unbundled HDSL Loop including manual service inquiry & facility reservation - Zone 1		1	UHL	UHL2X	9.01	284.74	163.54					26.94	12.76	0.00	0.00
	2 Wire Unbundled HDSL Loop including manual service inquiry & facility reservation - Zone 2		2	UHL	UHL2X	14.87	284.74	163.54					26.94	12.76	0.00	0.00
	2 Wire Unbundled HDSL Loop including manual service inquiry & facility reservation - Zone 3		3	UHL	UHL2X	22.82	284.74	163.54					26.94	12.76	0.00	0.00
	Order Coordination for Specified Conversion Time (per LSR)			UHL	OCOSL		45.34									
	2 Wire Unbundled HDSL Loop without manual service inquiry and facility reservation - Zone 1		1	UHL	UHL2W	9.01	207.48	132.05					26.94	12.76	0.00	0.00
	2 Wire Unbundled HDSL Loop without manual service inquiry and facility reservation - Zone 2		2	UHL	UHL2W	14.87	207.48	132.05					26.94	12.76	0.00	0.00
	2 Wire Unbundled HDSL Loop without manual service inquiry and facility reservation - Zone 3		3	UHL	UHL2W	22.82	207.48	132.05					26.94	12.76	0.00	0.00
	Order Coordination for Specified Conversion Time (per LSR)			UHL	OCOSL		45.34									
	CLEC to CLEC Conversion Charge without outside dispatch			UHL	UREWO		86.06	40.36					26.94	12.76	0.00	0.00
4-WIRE HIGH BIT RATE DIGITAL SUBSCRIBER LINE (HDSL) COMPATIBLE LOOP																
	4 Wire Unbundled HDSL Loop including manual service inquiry and facility reservation - Zone 1		1	UHL	UHL4X	10.62	341.65	220.45					26.94	12.76	0.00	0.00
	4-Wire Unbundled HDSL Loop including manual service inquiry and facility reservation - Zone 2		2	UHL	UHL4X	17.67	341.65	220.45					26.94	12.76	0.00	0.00
	4-Wire Unbundled HDSL Loop including manual service inquiry and facility reservation - Zone 3		3	UHL	UHL4X	27.24	341.65	220.45					26.94	12.76	0.00	0.00
	Order Coordination for Specified Conversion Time (per LSR)			UHL	OCOSL		45.34									
	4-Wire Unbundled HDSL Loop without manual service inquiry and facility reservation - Zone 1		1	UHL	UHL4W	10.62	264.39	188.96					26.94	12.76	0.00	0.00
	4-Wire Unbundled HDSL Loop without manual service inquiry and facility reservation - Zone 2		2	UHL	UHL4W	17.67	264.39	188.96					26.94	12.76	0.00	0.00
	4-Wire Unbundled HDSL Loop without manual service inquiry and facility reservation - Zone 3		3	UHL	UHL4W	27.24	264.39	188.96					26.94	12.76	0.00	0.00
	Order Coordination for Specified Conversion Time (per LSR)			UHL	OCOSL		45.34									
	CLEC to CLEC Conversion Charge without outside dispatch			UHL	UREWO		86.06	40.36					26.94	12.76	0.00	0.00
4-WIRE DS1 DIGITAL LOOP																
	4-Wire DS1 Digital Loop - Zone 1		1	USL	USLXX	47.60	714.84	421.47					42.19	12.76	0.00	0.00
	4-Wire DS1 Digital Loop - Zone 2		2	USL	USLXX	84.36	714.84	421.47					42.19	12.76	0.00	0.00
	4-Wire DS1 Digital Loop - Zone 3		3	USL	USLXX	134.29	714.84	421.47					42.19	12.76	0.00	0.00
	Order Coordination for Specified Conversion Time (per LSR)			USL	OCOSL		48.31									
	CLEC to CLEC Conversion Charge without outside dispatch			USL	UREWO		100.99	43.00					26.94	12.76	0.00	0.00
4-WIRE 19.2, 56 OR 64 KBPS DIGITAL GRADE LOOP																

UNBUNDLED NETWORK ELEMENTS - North Carolina														Attachment: 2		Exhibit: A	
CATEGORY		RATE ELEMENTS	Interim	Zone	BCS	USOC	RATES ($)					Svc Order Submitted Elec per LSR	Svc Order Submitted Manually per LSR	Incremental Charge - Manual Svc Order vs. Electronic-1st	Incremental Charge - Manual Svc Order vs. Electronic-Add'l	Incremental Charge - Manual Svc Order vs. Electronic-Disc 1st	Incremental Charge - Manual Svc Order vs. Electronic-Disc Add'l
							Rec	Nonrecurring		Nonrecurring Disconnect		OSS Rates ($)					
								First	Add'l	First	Add'l	SOMEC	SOMAN	SOMAN	SOMAN	SOMAN	SOMAN
		4 Wire Unbundled Digital 19.2 Kbps		1	UDL	UDL19	25.32	489.04	337.51					26.94	12.76	0.00	0.00
		4 Wire Unbundled Digital 19.2 Kbps		2	UDL	UDL19	43.11	489.04	337.51					26.94	12.76	0.00	0.00
		4 Wire Unbundled Digital 19.2 Kbps		3	UDL	UDL19	67.26	489.04	337.51					26.94	12.76	0.00	0.00
		4 Wire Unbundled Digital Loop 56 Kbps - Zone 1		1	UDL	UDL56	25.32	489.04	337.51					26.94	12.76	0.00	0.00
		4 Wire Unbundled Digital Loop 56 Kbps - Zone 2		2	UDL	UDL56	43.11	489.04	337.51					26.94	12.76	0.00	0.00
		4 Wire Unbundled Digital Loop 56 Kbps - Zone 3		3	UDL	UDL56	67.26	489.04	337.51					26.94	12.76	0.00	0.00
		Order Coordination for Specified Conversion Time (per LSR)			UDL	OCOSL		45.34									
		4 Wire Unbundled Digital Loop 64 Kbps - Zone 1		1	UDL	UDL64	25.32	489.04	337.51					26.94	12.76	0.00	0.00
		4 Wire Unbundled Digital Loop 64 Kbps - Zone 2		2	UDL	UDL64	43.11	489.04	337.51					26.94	12.76	0.00	0.00
		4 Wire Unbundled Digital Loop 64 Kbps - Zone 3		3	UDL	UDL64	67.26	489.04	337.51					26.94	12.76	0.00	0.00
		Order Coordination for Specified Conversion Time (per LSR)			UDL	OCOSL		45.34									
		CLEC to CLEC Conversion Charge without outside dispatch			UDL	UREWO		102.03	49.70					26.94	12.76	0.00	0.00
	2-WIRE Unbundled COPPER LOOP																
		2-Wire Unbundled Copper Loop-Designed including manual service inquiry & facility reservation - Zone 1		1	UCL	UCLPB	13.26	262.86	143.75					26.94	12.76	0.00	0.00
		2-Wire Unbundled Copper Loop-Designed including manual service inquiry & facility reservation - Zone 2		2	UCL	UCLPB	22.39	262.86	143.75					26.94	12.76	0.00	0.00
		2 Wire Unbundled Copper Loop-Designed including manual service inquiry & facility reservation - Zone 3		3	UCL	UCLPB	34.80	262.86	143.75					26.94	12.76	0.00	0.00
		Order Coordination for Unbundled Copper Loops (per loop)			UCL	UCLMC		61.38	61.38								
		2-Wire Unbundled Copper Loop-Designed without manual service inquiry and facility reservation - Zone 1		1	UCL	UCLPW	13.26	188.39	112.96					26.94	12.76	0.00	0.00
		2-Wire Unbundled Copper Loop-Designed without manual service inquiry and facility reservation - Zone 2		2	UCL	UCLPW	22.39	188.39	112.96					26.94	12.76	0.00	0.00
		2-Wire Unbundled Copper Loop-Designed without manual service inquiry and facility reservation - Zone 3		3	UCL	UCLPW	34.80	188.39	112.96					26.94	12.76	0.00	0.00
		Order Coordination for Unbundled Copper Loops (per loop)			UCL	UCLMC		61.38	61.38								
		CLEC to CLEC Conversion Charge without outside dispatch (UCL-Des)			UCL	UREWO		97.14	42.44					26.94	12.76	0.00	0.00
	4-WIRE COPPER LOOP																
		4-Wire Copper Loop including manual service inquiry and facility reservation - Zone 1		1	UCL	UCL4S	17.36	311.03	191.93					26.94	12.76	0.00	0.00
		4-Wire Copper Loop including manual service inquiry and facility reservation - Zone 2		2	UCL	UCL4S	29.61	311.03	191.93					26.94	12.76	0.00	0.00
		4-Wire Copper Loop including manual service inquiry and facility reservation - Zone 3		3	UCL	UCL4S	46.26	311.03	191.93					26.94	12.76	0.00	0.00
		Order Coordination for Unbundled Copper Loops (per loop)			UCL	UCLMC		61.38	61.38								
		4-Wire Copper Loop without manual service inquiry and facility reservation - Zone 1		1	UCL	UCL4W	17.36	236.57	161.14					26.94	12.76	0.00	0.00
		4-Wire Copper Loop without manual service inquiry and facility reservation - Zone 2		2	UCL	UCL4W	29.61	236.57	161.14					26.94	12.76	0.00	0.00
		4-Wire Copper Loop without manual service inquiry and facility reservation - Zone 3		3	UCL	UCL4W	46.26	236.57	161.14					26.94	12.76	0.00	0.00
		Order Coordination for Unbundled Copper Loops (per loop)			UCL	UCLMC		61.38	61.38								
		CLEC to CLEC Conversion Charge without outside dispatch (UCL-Des)			UCL	UREWO		97.14	42.44								
LOOP MODIFICATION																	
		Unbundled Loop Modification, Removal of Load Coils - 2 Wire pair less than or equal to 18k ft, per Unbundled Loop			UAL, UHL, UCL, UEQ, ULS, UEA, UEANL, UEPSR, UEPSB	ULM2L		21.24	21.24					26.94	12.76	0.00	0.00
		Unbundled Loop Modification Removal of Load Coils - 4 Wire less than or equal to 18K ft, per Unbundled Loop			UHL, UCL, UEA	ULM4L		21.24	21.24					26.94	12.76	0.00	0.00
		Unbundled Loop Modification Removal of Bridged Tap Removal, per unbundled loop			UAL, UHL, UCL, UEQ, ULS, UEA, UEANL, UEPSR, UEPSB	ULMBT		24.84	24.84					26.94	12.76	0.00	0.00
SUB-LOOPS																	
	Sub-Loop Distribution																

UNBUNDLED NETWORK ELEMENTS - North Carolina														Attachment: 2		Exhibit: A	
CATEGORY		RATE ELEMENTS	Interim	Zone	BCS	USOC	RATES ($)					Svc Order Submitted Elec per LSR	Svc Order Submitted Manually per LSR	Incremental Charge - Manual Svc Order vs. Electronic-1st	Incremental Charge - Manual Svc Order vs. Electronic-Add'l	Incremental Charge - Manual Svc Order vs. Electronic-Disc 1st	Incremental Charge - Manual Svc Order vs. Electronic-Disc Add'l
							Rec	Nonrecurring		Nonrecurring Disconnect		OSS Rates ($)					
								First	Add'l	First	Add'l	SOMEC	SOMAN	SOMAN	SOMAN	SOMAN	SOMAN
		Sub-Loop - Per Cross Box Location - CLEC Feeder Facility Set-Up	I		UEANL	USBSA		373.57						26.94	12.76	0.00	0.00
		Sub-Loop - Per Cross Box Location - Per 25 Pair Panel Set-Up	I		UEANL	USBSB		33.78						26.94	12.76	0.00	0.00
		Sub-Loop - Per Building Equipment Room - CLEC Feeder Facility Set-Up	I		UEANL	USBSC		234.76						26.94	12.76	0.00	0.00
		Sub-Loop - Per Building Equipment Room - Per 25 Pair Panel Set-Up	I		UEANL	USBSD		81.05						26.94	12.76	0.00	0.00
		Sub-Loop Distribution Per 2-Wire Analog Voice Grade Loop - Zone 1	I	1	UEANL	USBN2	7.31	126.03	54.54					26.94	12.76	0.00	0.00
		Sub-Loop Distribution Per 2-Wire Analog Voice Grade Loop - Zone 2	I	2	UEANL	USBN2	11.93	126.03	54.54					26.94	12.76	0.00	0.00
		Sub-Loop Distribution Per 2-Wire Analog Voice Grade Loop - Zone 3	I	3	UEANL	USBN2	18.20	126.03	54.54					26.94	12.76	0.00	0.00
		Order Coordination for Unbundled Sub-Loops, per sub-loop pair			UEANL	USBMC		61.38	61.38								
		Sub-Loop Distribution Per 4-Wire Analog Voice Grade Loop - Zone 1		1	UEANL	USBN4	8.44	156.52	79.66					26.94	12.76	0.00	0.00
		Sub-Loop Distribution Per 4-Wire Analog Voice Grade Loop - Zone 2		2	UEANL	USBN4	13.81	156.52	79.66					26.94	12.76	0.00	0.00
		Sub-Loop Distribution Per 4-Wire Analog Voice Grade Loop - Zone 3		3	UEANL	USBN4	21.10	156.52	79.66					26.94	12.76	0.00	0.00
		Order Coordination for Unbundled Sub-Loops, per sub-loop pair			UEANL	USBMC		61.38	61.38								
		Sub-Loop 2-Wire Intrabuilding Network Cable (INC)	I		UEANL	USBR2	2.79	114.05	37.20					26.94	12.76	0.00	0.00
		Order Coordination for Unbundled Sub-Loops, per sub-loop pair			UEANL	USBMC		61.38	61.38								
		Sub-Loop 4-Wire Intrabuilding Network Cable (INC)	I		UEANL	USBR4	3.74	127.67	50.82					26.94	12.76	0.00	0.00
		Order Coordination for Unbundled Sub-Loops, per sub-loop pair			UEANL	USBMC		61.38	61.38								
		Loop Testing - Basic 1st Half Hour			UEANL	URET1		76.24	76.24								
		Loop Testing - Basic Additional Half Hour			UEANL	URETA		39.51	39.51								
		2 Wire Copper Unbundled Sub-Loop Distribution - Zone 1	I	1	UEF	UCS2X	6.10	137.10	60.24					26.94	12.76	0.00	0.00
		2 Wire Copper Unbundled Sub-Loop Distribution - Zone 2	I	2	UEF	UCS2X	9.70	137.10	60.24					26.94	12.76	0.00	0.00
		2 Wire Copper Unbundled Sub-Loop Distribution - Zone 3	I	3	UEF	UCS2X	14.59	137.10	60.24					26.94	12.76	0.00	0.00
		Order Coordination for Unbundled Sub-Loops, per sub-loop pair			UEF	USBMC		61.38	61.38								
		4 Wire Copper Unbundled Sub-Loop Distribution - Zone 1	I	1	UEF	UCS4X	6.58	162.24	85.38					26.94	12.76	0.00	0.00
		4 Wire Copper Unbundled Sub-Loop Distribution - Zone 2	I	2	UEF	UCS4X	10.51	162.24	85.38					26.94	12.76	0.00	0.00
		4 Wire Copper Unbundled Sub-Loop Distribution - Zone 3	I	3	UEF	UCS4X	15.84	162.24	85.38					26.94	12.76	0.00	0.00
		Order Coordination for Unbundled Sub-Loops, per sub-loop pair			UEF	USBMC		61.38	61.38								
		Loop Testing - Basic 1st Half Hour			UEF	URET1		76.24	76.24								
		Loop Testing - Basic Additional Half Hour			UEF	URETA		39.51	39.51								
	Unbundled Network Terminating Wire (UNTW)																
		Unbundled Network Terminating Wire (UNTW) per Pair			UENTW	UENPP	0.4351	64.98						26.94	12.76	0.00	0.00
	Network Interface Device (NID)																
		Network Interface Device (NID) - 1-2 lines	I		UENTW	UND12		86.37	56.69					26.94	12.76	0.00	0.00
		Network Interface Device (NID) - 1-6 lines	I		UENTW	UND16		127.93	98.21					26.94	12.76	0.00	0.00
		Network Interface Device Cross Connect - 2 W	I		UENTW	UNDC2		11.68	11.68					26.94	12.76	0.00	0.00
		Network Interface Device Cross Connect - 4W	I		UENTW	UNDC4		11.68	11.68					26.94	12.76	0.00	0.00
UNE OTHER, PROVISIONING ONLY - NO RATE																	
		NID - Dispatch and Service Order for NID installation			UENTW	UNDBX	0.00	0.00									
		UNTW Circuit Id Establishment, Provisioning Only - No Rate			UENTW	UENCE	0.00	0.00									
		Unbundled Contract Name, Provisioning Only - No Rate			UEANL,UEF,UEQ,UENTW	UNECN	0.00	0.00									
UNE OTHER, PROVISIONING ONLY - NO RATE																	

UNBUNDLED NETWORK ELEMENTS - North Carolina														Attachment: 2		Exhibit: A	
CATEGORY		RATE ELEMENTS	Interim	Zone	BCS	USOC	RATES ($)					Svc Order Submitted Elec per LSR	Svc Order Submitted Manually per LSR	Incremental Charge - Manual Svc Order vs. Electronic-1st	Incremental Charge - Manual Svc Order vs. Electronic-Add'l	Incremental Charge - Manual Svc Order vs. Electronic-Disc 1st	Incremental Charge - Manual Svc Order vs. Electronic-Disc Add'l
							Rec	Nonrecurring		Nonrecurring Disconnect		OSS Rates ($)					
								First	Add'l	First	Add'l	SOMEC	SOMAN	SOMAN	SOMAN	SOMAN	SOMAN
		Unbundled Contact Name, Provisioning Only - no rate			UAL,UCL,UDC,UDL, UDN,UEA,UHL,ULC	UNECN	0.00	0.00									
		Unbundled Sub-Loop Feeder-2 Wire Cross Box Jumper - no rate			UEA,UDN,UCL,UDC	USBFQ	0.00	0.00									
		Unbundled Sub-Loop Feeder-4 Wire Cross Box Jumper - no rate			UEA,USL,UCL,UDL	USBFR	0.00	0.00									
		Unbundled DS1 Loop - Superframe Format Option - no rate			USL	CCOSF	0.00	0.00									
		Unbundled DS1 Loop - Expanded Superframe Format option - no rate			USL	CCOEF	0.00	0.00									
HIGH CAPACITY UNBUNDLED LOCAL LOOP																	
		High Capacity Unbundled Local Loop - DS3 - Per Mile per month			UE3	1L5ND	13.33										
		High Capacity Unbundled Local Loop - DS3 - Facility Termination per month			UE3	UE3PX	450.69	1,071.00	646.12					53.48	53.48		
		High Capacity Unbundled Local Loop - STS-1 - Per Mile per month			UDLSX	1L5ND	13.33										
		High Capacity Unbundled Local Loop - STS-1 - Facility Termination per month			UDLSX	UDLS1	464.26	1,071.00	646.12					53.48	53.48		
LOOP MAKE-UP																	
		Loop Makeup - Preordering Without Reservation, per working or spare facility queried (Manual).			UMK	UMKLW		55.44	55.44					19.99	19.99	19.99	19.99
		Loop Makeup - Preordering With Reservation, per spare facility queried (Manual).			UMK	UMKLP		55.73	55.73					19.99	19.99	19.99	19.99
		Loop Makeup--With or Without Reservation, per working or spare facility queried (Mechanized)			UMK	UMKMQ		0.6960821	0.6960821								
LINE SHARING AND LINE SPLITTING																	
	NOTE 1: The Line Sharing monthly recurring rates for all installations completed from October 02, 2003 through midnight October 01, 2004 shall be billed as follows:																
	NOTE 1: 10/02/2003 – 10/01/2004: 25% of the rate for an unbundled copper loop non-designed ("UCLND")																
	NOTE 1: 10/02/2004 – 10/01/2005: 50% of the rate for UCLND																
	NOTE 1: 10/02/2005 – 10/01/2006: 75% of the rate for UCLND																
	NOTE 1: Above will apply to USOCS: ULSDT and ULSCT																
	****NOTE 2: The Line Sharing monthly recurring rates with USOCs ULSDC and ULSCC applies only to circuits installed and inservice on or before October 1, 2003**																
	LINE SHARING																
	SPLITTERS-CENTRAL OFFICE BASED																
		Line Sharing Splitter, per System 96 Line Capacity			ULS	ULSDA	181.18	631.54	0.00					26.94	12.76		
		Line Sharing Splitter, per System 24 Line Capacity			ULS	ULSDB	38.99	631.54	0.00					26.94	12.76		
		Line Sharing Splitter, Per System, 8 Line Capacity			ULS	ULSD8	12.73	424.61	0.00					26.94	12.76		
		Line Sharing-DLEC Owned Splitter in CO-CFA activaton-deactivation (per LSOD)			ULS	ULSDG		146.32	31.27					26.94	12.76		
	END USER ORDERING-CENTRAL OFFICE BASED LINE SHARING																
		Line Sharing - per Line Activation (BST Owned splitter) - OBSOLETE see **NOTE 2			ULS	ULSDC	0.61	54.71	28.77					26.94	12.76		
		Line Share Service, TRO per line activation, BST owned splitter - Central Office Located (25% of UCLND) - please see NOTE 1 (E:10/2/2003)			ULS	ULSDT	3.49	54.71	28.77								
		Line Share Service, TRO per line activation, BST owned splitter - Central Office Located (50% of UCLND) - please see NOTE 1 (E:10/2/2004)			ULS	ULSDT	6.99	54.71	28.77								
		Line Share Service, TRO per line activation, BST owned splitter - Central Office Located (75% of UCLND) - please see NOTE 1 (E:10/2/2005)			ULS	ULSDT	10.48	54.71	28.77								
		Line Sharing - per Subsequent Activity per Line Rearrangement(BST Owned Splitter			ULS	ULSDS		35.42	16.57					26.94	12.76		
		Line Sharing - per Subsequent Activity per Line Rearrangement(DLEC Owned Splitter			ULS	ULSCS		35.14	16.29					26.94	12.76		
		Line Sharing - per Line Activation (DLEC owned Splitter) - OBSOLETE see **NOTE 2			ULS	ULSCC	0.61	47.44	19.31					26.94	12.76		

UNBUNDLED NETWORK ELEMENTS - North Carolina														Attachment: 2		Exhibit: A	
CATEGORY		RATE ELEMENTS	Interim	Zone	BCS	USOC	RATES ($)					Svc Order Submitted Elec per LSR	Svc Order Submitted Manually per LSR	Incremental Charge - Manual Svc Order vs. Electronic-1st	Incremental Charge - Manual Svc Order vs. Electronic-Add'l	Incremental Charge - Manual Svc Order vs. Electronic-Disc 1st	Incremental Charge - Manual Svc Order vs. Electronic-Disc Add'l
							Rec	Nonrecurring		Nonrecurring Disconnect		OSS Rates ($)					
								First	Add'l	First	Add'l	SOMEC	SOMAN	SOMAN	SOMAN	SOMAN	SOMAN
		Line Share Service, TRO per line activation, CLEC owned splitter - Central Office Located (25% of UCLND) - please see NOTE 1 (E:10/2/2003)			ULS	ULSCT	3.49	47.44	19.31								
		Line Share Service, TRO per line activation, CLEC owned splitter - Central Office Located (50% of UCLND) - please see NOTE 1 (E:10/2/2004)			ULS	ULSCT	6.99	47.44	19.31								
		Line Share Service, TRO per line activation, CLEC owned splitter - Central Office Located (75% of UCLND) - please see NOTE 1 (E:10/2/2005)			ULS	ULSCT	10.48	47.44	19.31								
	LINE SPLITTING																
	END USER ORDERING-CENTRAL OFFICE BASED																
		Line Splitting - per line activation DLEC owned splitter			UEPSR UEPSB	UREOS	0.61										
		Line Splitting - per line activation BST owned - physical			UEPSR UEPSB	UREBP	0.61	56.92	28.59					26.94	12.76		
		Line Splitting - per line activation BST owned - virtual			UEPSR UEPSB	UREBV	0.61	56.92	28.59					26.94	12.76		
	MAINTENANCE																
		No Trouble Found - per 1/2 hour increments - Basic						80.00	55.00								
		No Trouble Found - per 1/2 hour increments - Overtime						120.00	82.50								
		No Trouble Found - per 1/2 hour increments - Premium						160.00	110.00								
UNBUNDLED DEDICATED TRANSPORT																	
	INTEROFFICE CHANNEL - DEDICATED TRANSPORT																
		Interoffice Channel - Dedicated Transport - 2-Wire Voice Grade - Per Mile per month			U1TVX	1L5XX	0.0125										
		Interoffice Channel - Dedicated Transport- 2- Wire Voice Grade - Facility Termination			U1TVX	U1TV2	18.00	137.48	52.58					38.07	38.07		
		Interoffice Channel - Dedicated Transpor t- 2-Wire Voice Grade Rev Bat. - Per Mile per month			U1TVX	1L5XX	0.0125										
		Interoffice Channel - Dedicated Transport- 2- Wire VG Rev Bat. - Facility Termination			U1TVX	U1TR2	18.00	137.48	52.58					38.07	38.07		
		Interoffice Channel - Dedicated Transport - 4-Wire Voice Grade - Per Mile per month			U1TVX	1L5XX	0.0125										
		Interoffice Channel - Dedicated Transport - 4- Wire Voice Grade - Facility Termination			U1TVX	U1TV4	22.16	106.11	65.95					22.32	22.32		
		Interoffice Channel - Dedicated Transport - 56 kbps - per mile per month			U1TDX	1L5XX	0.0282										
		Interoffice Channel - Dedicated Transport - 56 kbps - Facility Termination			U1TDX	U1TD5	17.40	137.48	52.58					38.07	38.07		
		Interoffice Channel - Dedicated Transport - 64 kbps - per mile per month			U1TDX	1L5XX	0.0282										
		Interoffice Channel - Dedicated Transport - 64 kbps - Facility Termination			U1TDX	U1TD6	17.40	137.48	52.58					38.07	38.07		
		Interoffice Channel - Dedicated Channel - DS1 - Per Mile per month			U1TD1	1L5XX	0.5753										
		Interoffice Channel - Dedicated Tranport - DS1 - Facility Termination			U1TD1	U1TF1	71.29	217.17	163.75					38.07	38.07		
		Interoffice Channel - Dedicated Transport - DS3 - Per Mile per month			U1TD3	1L5XX	12.98										
		Interoffice Channel - Dedicated Transport - DS3 - Facility Termination per month			U1TD3	U1TF3	720.38	794.94	579.55					91.26	91.26		
		Interoffice Channel - Dedicated Transport - STS-1 - Per Mile per month			U1TS1	1L5XX	6.14										
		Interoffice Channel - Dedicated Transport - STS-1 - Facility Termination			U1TS1	U1TFS	790.37	642.23	408.89					53.48	53.48		
DARK FIBER																	
		Dark Fiber, Four Fiber Strands, Per Route Mile or Fraction Thereof per month - Interoffice Channel			UDF, UDFCX	1L5DF	27.71										
		NRC Dark Fiber - Interoffice Channel			UDF, UDFCX	UDF14		1,807.00	562.96								
		Dark Fiber, Four Fiber Strands, Per Route Mile or Fraction Thereof per month - Local Loop			UDF, UDFCX	1L5DL	64.04										
		NRC Dark Fiber - Local Loop			UDF, UDFCX	UDFL4		1,347.00	279.87								

UNBUNDLED NETWORK ELEMENTS - North Carolina														Attachment: 2		Exhibit: A	
CATEGORY		RATE ELEMENTS	Interim	Zone	BCS	USOC	RATES ($)					Svc Order Submitted Elec per LSR	Svc Order Submitted Manually per LSR	Incremental Charge - Manual Svc Order vs. Electronic-1st	Incremental Charge - Manual Svc Order vs. Electronic-Add'l	Incremental Charge - Manual Svc Order vs. Electronic-Disc 1st	Incremental Charge - Manual Svc Order vs. Electronic-Disc Add'l
							Rec	Nonrecurring		Nonrecurring Disconnect		OSS Rates ($)					
								First	Add'l	First	Add'l	SOMEC	SOMAN	SOMAN	SOMAN	SOMAN	SOMAN
8XX ACCESS TEN DIGIT SCREENING																	
		8XX Access Ten Digit Screening, Per Call			OHD		0.0005										
		8XX Access Ten Digit Screening, Reservation Charge Per 8XX Number Reserved			OHD	N8R1X		7.05	0.96					26.94			
		8XX Access Ten Digit Screening, Per 8XX No. Established W/O POTS Translations			OHD			23.82	2.73					41.35			
		8XX Access Ten Digit Screening, Per 8XX No. Established With POTS Translations			OHD	N8FTX		23.82	2.73					41.35			
		8XX Access Ten Digit Screening, Customized Area of Service Per 8XX Number			OHD	N8FCX		5.63	2.82								
		8XX Access Ten Digit Screening, Multiple InterLATA CXR Routing Per CXR Requested Per 8XX No.			OHD	N8FMX		6.59	3.77								
		8XX Access Ten Digit Screening, Change Charge Per Request			OHD	N8FAX		8.01	0.96					26.94			
		8XX Access Ten Digit Screening, Call Handling and Destination Features			OHD	N8FDX		5.63									
LINE INFORMATION DATA BASE ACCESS (LIDB)																	
		LIDB Common Transport Per Query			OQT		0.00003										
		LIDB Validation Per Query			OQU		0.0134										
		LIDB Originating Point Code Establishment or Change			OQT, OQU	NRBPX		62.26						26.94	26.94		
SIGNALING (CCS7)																	
		CCS7 Signaling Connection, Per link (A link)			UDB	TPP++	18.22	278.02	278.02					41.35	41.35		
		CCS7 Signaling Connection, Per link (B link) (also known as D link)			UDB	TPP++	18.22	278.02	278.02					41.35	41.35		
		CCS7 Signaling Termination, Per STP Port			UDB	PT8SX	132.83										
		CCS7 Signaling Usage, Per ISUP Message			UDB		0.00004										
		CCS7 Signaling Usage, Per TCAP Message			UDB		0.00009										
		CCS7 Signaling Usage Surrogate, per link per LATA			UDB	STU56	338.98										
		CCS7 Signaling Point Code, per Originating Point Code Establishment or Change, per STP affected			UDB	CCAPO		40.00	40.00					19.99	19.99		
		CCS7 Signaling Point Code, per Destination Point Code Establishment or Change, Per Stp Affected			UDB	CCAPD		8.00	8.00					19.99	19.99		
E911 SERVICE																	
		Local Channel - Dedicated - 2-wr Voice Grade - Zone 1		1			11.24	553.80	89.69					42.17	12.76		
		Local Channel - Dedicated - 2-wr Voice Grade - Zone 2		2			19.91	553.80	89.69					42.17	12.76		
		Local Channel - Dedicated - 2-wr Voice Grade - Zone 3		3			31.70	553.80	89.69					42.17	12.76		
		Interoffice Transport - Dedicated - 2-wr Voice Grade Per Mile					0.0282										
		Interoffice Transport - Dedicated - 2-wr Voice Grade Per Facility Termination					18.00	137.48	52.58					38.07	38.07		
		Local Channel - Dedicated - DS1 - Zone 1		1			27.05	534.48	462.69					86.15	1.77		
		Local Channel - Dedicated - DS1 - Zone 2		2			47.94	534.48	462.69					86.15	1.77		
		Local Channel - Dedicated - DS1 - Zone 3		3			76.32	534.48	462.69					86.15	1.77		
		Interoffice Transport - Dedicated - DS1 Per Mile					0.5753										
		Interoffice Transport - Dedicated - DS1 Per Facility Termination					71.29	217.17	163.75					38.07	38.07		
CALLING NAME (CNAM) SERVICE																	
		CNAM For DB Owners - Service Establishment			OQV			75.62									
		CNAM For Non DB Owners - Service Establishment			OQV			75.62									
		CNAM For DB Owners - Service Provisioning With Point Code Establishment (Initial)			OQV			2,354.00	2,354.00								
		CNAM For DB Owners - Service Provisioning With Point Code Establishment (Subsequent)			OQV			1,739.00	1,739.00								
		CNAM For Non DB Owners - Service Provisioning With Point Code Establishment (Initial)			OQV			1,072.00	1,072.00								
		CNAM For Non DB Owners - Service Provisioning With Point Code Establishment (Subsequent)			OQV			768.44	768.44								
		CNAM for DB & Non DB Owners, Per Query			OQV		0.0009592										
SELECTIVE ROUTING																	
		Selective Routing Per Unique Line Class Code Per Request Per Switch						188.59						26.94	12.76		

UNBUNDLED NETWORK ELEMENTS - North Carolina														Attachment: 2		Exhibit: A	
CATEGORY		RATE ELEMENTS	Interim	Zone	BCS	USOC	RATES ($)					Svc Order Submitted Elec per LSR	Svc Order Submitted Manually per LSR	Incremental Charge - Manual Svc Order vs. Electronic-1st	Incremental Charge - Manual Svc Order vs. Electronic-Add'l	Incremental Charge - Manual Svc Order vs. Electronic-Disc 1st	Incremental Charge - Manual Svc Order vs. Electronic-Disc Add'l
							Rec	Nonrecurring		Nonrecurring Disconnect		OSS Rates ($)					
								First	Add'l	First	Add'l	SOMEC	SOMAN	SOMAN	SOMAN	SOMAN	SOMAN
VIRTUAL COLLOCATION																	
		Virtual Collocation-2 Wire Cross Connects (Loop) for Line Splitting			UEPSR UEPSB	VE1LS	0.0287	33.96	32.08	0.00	0.00			19.99	19.99		
PHYSICAL COLLOCATION																	
		Physical Collocation-2 Wire Cross Connects (Loop) for Line Splitting			UEPSR UEPSB	PE1LS	0.0309	33.53	31.65	0.00	0.00			19.99	19.99		
AIN SELECTIVE CARRIER ROUTING																	
		Regional Service Establishment			SRC	SRCEC		215,597.00									
		End Office Establishment			SRC	SRCEO		347.27									
		Query NRC, per query			SRC		0.0053758										
AIN - BELLSOUTH AIN SMS ACCESS SERVICE																	
		AIN SMS Access Service - Service Establishment, Per State, Initial Setup			A1N	CAMSE		294.77									
		AIN SMS Access Service - Port Connection - Dial/Shared Access			A1N	CAMDP		86.94									
		AIN SMS Access Service - Port Connection - ISDN Access			A1N	CAM1P		86.94									
		AIN SMS Access Service - User Identification Codes - Per User ID Code			A1N	CAMAU		200.83									
		AIN SMS Access Service - Security Card, Per User ID Code, Initial or Replacement			A1N	CAMRC		172.05									
		AIN SMS Access Service - Storage, Per Unit (100 Kilobytes)					0.0023										
		AIN SMS Access Service - Session, Per Minute					0.0791										
		AIN SMS Access Service - Company Performed Session, Per Minute					2.08										
AIN - BELLSOUTH AIN TOOLKIT SERVICE																	
		AIN Toolkit Service - Service Establishment Charge, Per State, Initial Setup			CAM	BAPSC		290.05									
		AIN Toolkit Service - Training Session, Per Customer				BAPVX		8,363.00									
		AIN Toolkit Service - Trigger Access Charge, Per Trigger, Per DN, Term. Attempt				BAPTT		72.76									
		AIN Toolkit Service - Trigger Access Charge, Per Trigger, Per DN, Off-Hook Delay				BAPTD		72.76									
		AIN Toolkit Service - Trigger Access Charge, Per Trigger, Per DN, Off-Hook Immediate				BAPTM		72.76									
		AIN Toolkit Service - Trigger Access Charge, Per Trigger, Per DN, 10-Digit PODP				BAPTO		149.95									
		AIN Toolkit Service - Trigger Access Charge, Per Trigger, Per DN, CDP				BAPTC		149.95									
		AIN Toolkit Service - Trigger Access Charge, Per Trigger, Per DN, Feature Code				BAPTF		149.95									
		AIN Toolkit Service - Query Charge, Per Query					0.02										
		AIN Toolkit Service - Type 1 Node Charge, Per AIN Toolkit Subscription, Per Node, Per Query					0.005										
		AIN Toolkit Service - SCP Storage Charge, Per SMS Access Account, Per 100 Kilobytes					1.45										
		AIN Toolkit Service - Monthly report - Per AIN Toolkit Service Subscription			CAM	BAPMS	15.98	71.80									
		AIN Toolkit Service - Special Study - Per AIN Toolkit Service Subscription			CAM	BAPLS	0.08	47.20									
		AIN Toolkit Service - Call Event Report - Per AIN Toolkit Service Subscription			CAM	BAPDS	15.90	71.80									
		AIN Toolkit Service - Call Event Special Study - Per AIN Toolkit Service Subscription			CAM	BAPES	0.003	47.20									
ENHANCED EXTENDED LINK (EELs)																	
	NOTE: The monthly recurring and non-recurring charges below will apply and the Switch-As-Is Charge will not apply for UNE combinations provisioned as ' Ordinarily Combined' Network Elements.																
	NOTE: The monthly recurring and the Switch-As-Is Charge and not the non-recurring charges below will apply for UNE combinations provisioned as ' Currently Combined' Network Elements.																
	EXTENTED 2-WIRE VOICE GRADE EXTENDED LOOP WITH DEDICATED DS1 INTEROFFICE TRANSPORT																
		First 2-Wire VG Loop (SL2) in Combination - Zone 1		1	UNCVX	UEAL2	14.97	142.97	106.56					38.07	38.07		
		First 2-Wire VG Loop (SL2) in Combination - Zone 2		2	UNCVX	UEAL2	25.93	142.97	106.56					38.07	38.07		

UNBUNDLED NETWORK ELEMENTS - North Carolina

CATEGORY	RATE ELEMENTS	Interim	Zone	BCS	USOC	RATES ($)					Svc Order Submitted Elec per LSR	Svc Order Submitted Manually per LSR	Attachment: 2		Exhibit: A	
													Incremental Charge - Manual Svc Order vs. Electronic-1st	Incremental Charge - Manual Svc Order vs. Electronic-Add'l	Incremental Charge - Manual Svc Order vs. Electronic-Disc 1st	Incremental Charge - Manual Svc Order vs. Electronic-Disc Add'l
						Rec	Nonrecurring		Nonrecurring Disconnect		OSS Rates ($)					
							First	Add'l	First	Add'l	SOMEC	SOMAN	SOMAN	SOMAN	SOMAN	SOMAN
	First 2-Wire VG Loop (SL2) in Combination - Zone 3		3	UNCVX	UEAL2	40.81	142.97	106.56					38.07	38.07		
	Interoffice Transport - Dedicated - DS1 combination - Per Mile per month			UNC1X	1L5XX	0.5753										
	Interoffice Transport - Dedicated - DS1 combination - Facility Termination per month			UNC1X	U1TF1	71.29	217.17	163.75					38.07	38.07		
	1/0 Channelization System in combination Per Month			UNC1X	MQ1	146.69	197.78	140.06								
	Voice Grade COCI - Per Month			UNCVX	1D1VG	1.27	13.09	9.38								
	Each Additional 2-Wire VG Loop (SL 2) in Combination - Zone 1		1	UNCVX	UEAL2	14.97	142.97	106.56					38.07	38.07		
	Each Additional 2-Wire VG Loop (SL 2) in Combination - Zone 2		2	UNCVX	UEAL2	25.93	142.97	106.56					38.07	38.07		
	Each Additional 2-Wire VG Loop (SL 2) in Combination - Zone 3		3	UNCVX	UEAL2	40.81	142.97	106.56					38.07	38.07		
	Voice Grade COCI - Per Month			UNCVX	1D1VG	1.27	13.09	9.38								
	Nonrecurring Currently Combined Network Elements Switch -As-Is Charge			UNC1X	UNCCC		21.75	21.75	32.28	10.96			38.07	38.07		
	EXTENDED 4-WIRE VOICE GRADE EXTENDED LOOP WITH DEDICATED DS1 INTEROFFICE TRANSPORT															
	First 4-Wire Analog Voice Grade Loop in Combination - Zone 1		1	UNCVX	UEAL4	21.32	288.47	237.45					38.07	38.07		
	First 4-Wire Analog Voice Grade Loop in Combination - Zone 2		2	UNCVX	UEAL4	36.27	288.47	237.45					38.07	38.07		
	First 4-Wire Analog Voice Grade Loop in Combination - Zone 3		3	UNCVX	UEAL4	56.57	288.47	237.45					38.07	38.07		
	Interoffice Transport - Dedicated - DS1 combination - Per Mile Per Month			UNC1X	1L5XX	0.5753										
	Interoffice Transport - Dedicated - DS1 - Facility Termination Per Month			UNC1X	U1TF1	71.29	217.17	163.75					38.07	38.07		
	1/0 Channel System in combination Per Month			UNC1X	MQ1	146.69	197.78	140.06								
	Voice Grade COCI in combination - per month			UNCVX	1D1VG	1.27	13.09	9.38								
	Additional 4-Wire Analog Voice Grade Loop in same DS1 Interoffice Transport Combination - Zone 1		1	UNCVX	UEAL4	21.32	288.47	237.45					38.07	38.07		
	Additional 4-Wire Analog Voice Grade Loop in same DS1 Interoffice Transport Combination - Zone 2		2	UNCVX	UEAL4	36.27	288.47	237.45					38.07	38.07		
	Additional 4-Wire Analog Voice Grade Loop in same DS1 Interoffice Transport Combination - Zone 3		3	UNCVX	UEAL4	56.57	288.47	237.45					38.07	38.07		
	Additional Voice Grade COCI in combination - per month			UNCVX	1D1VG	1.27	13.09	9.38								
	Nonrecurring Currently Combined Network Elements Switch -As-Is Charge			UNC1X	UNCCC		21.75	21.75	32.28	10.96			38.07	38.07		
	EXTENDED 4-WIRE 56 KBPS EXTENDED DIGITAL LOOP WITH DEDICATED DS1 INTEROFFICE TRANSPORT															
	First 4-Wire 56Kbps Digital Grade Loop in Combination - Zone 1		1	UNCDX	UDL56	25.32	489.04	337.51					38.07	38.07		
	First 4-Wire 56Kbps Digital Grade Loop in Combination - Zone 2		2	UNCDX	UDL56	43.11	489.04	337.51					38.07	38.07		
	First 4-Wire 56Kbps Digital Grade Loop in Combination - Zone 3		3	UNCDX	UDL56	67.26	489.04	337.51					38.07	38.07		
	Interoffice Transport - Dedicated - DS1 combination - Per Mile Per Month			UNC1X	1L5XX	0.5753										
	Interoffice Transport - Dedicated - DS1 - combination Facility Termination Per Month			UNC1X	U1TF1	71.29	217.17	163.75					38.07	38.07		
	1/0 Channel System in combination Per Month			UNC1X	MQ1	146.69	197.78	140.06								
	OCU-DP COCI (data) per month (2.4-64kbs)			UNCDX	1D1DD	2.00	15.76	11.28								
	Additional 4-Wire 56Kbps Digital Grade Loop in same DS1 Interoffice Transport Combination - Zone 1		1	UNCDX	UDL56	25.32	489.04	337.51					38.07	38.07		
	Additional 4-Wire 56Kbps Digital Grade Loop in same DS1 Interoffice Transport Combination - Zone 2		2	UNCDX	UDL56	43.11	489.04	337.51					38.07	38.07		
	Additional 4-Wire 56Kbps Digital Grade Loop in same DS1 Interoffice Transport Combination - Zone 3		3	UNCDX	UDL56	67.26	489.04	337.51					38.07	38.07		
	Additional OCU-DP COCI (data) - in combination per month (2.4-64kbs)			UNCDX	1D1DD	2.00	15.76	11.28								

UNBUNDLED NETWORK ELEMENTS - North Carolina														Attachment: 2		Exhibit: A	
CATEGORY		RATE ELEMENTS	Interim	Zone	BCS	USOC	RATES ($)					Svc Order Submitted Elec per LSR	Svc Order Submitted Manually per LSR	Incremental Charge - Manual Svc Order vs. Electronic-1st	Incremental Charge - Manual Svc Order vs. Electronic-Add'l	Incremental Charge - Manual Svc Order vs. Electronic-Disc 1st	Incremental Charge - Manual Svc Order vs. Electronic-Disc Add'l
							Rec	Nonrecurring		Nonrecurring Disconnect		OSS Rates ($)					
								First	Add'l	First	Add'l	SOMEC	SOMAN	SOMAN	SOMAN	SOMAN	SOMAN
		Nonrecurring Currently Combined Network Elements Switch -As-Is Charge			UNC1X	UNCCC		21.75	21.75	32.28	10.96			38.07	38.07		
	EXTENDED 4-WIRE 64 KBPS EXTENDED DIGITAL LOOP WITH DEDICATED DS1 INTEROFFICE TRANSPORT																
		First 4-Wire 64Kbps Digital Grade Loop in Combination - Zone 1		1	UNCDX	UDL64	25.32	489.04	337.51					38.07	38.07		
		First 4-Wire 64Kbps Digital Grade Loop in Combination - Zone 2		2	UNCDX	UDL64	43.11	489.04	337.51					38.07	38.07		
		First 4-Wire 64Kbps Digital Grade Loop in Combination - Zone 3		3	UNCDX	UDL64	67.26	489.04	337.51					38.07	38.07		
		Interoffice Transport - Dedicated - DS1 combination - Per Mile Per Month			UNC1X	1L5XX	0.5753										
		interoffice Transport - Dedicated - DS1 combination - Facility Termination Per Month			UNC1X	U1TF1	71.29	217.17	163.75					38.07	38.07		
		1/0 Channel System in combination Per Month			UNC1X	MQ1	146.69	197.78	140.06								
		OCU-DP COCI (data) - in combination - per month (2.4-64kbs)			UNCDX	1D1DD	2.00	15.76	11.28								
		Additional 4-Wire 64Kbps Digital Grade Loop in same DS1 Interoffice Transport Combination - Zone 1		1	UNCDX	UDL64	25.32	489.04	337.51					38.07	38.07		
		Additional 4-Wire 64Kbps Digital Grade Loop in same DS1 Interoffice Transport Combination - Zone 2		2	UNCDX	UDL64	43.11	489.04	337.51					38.07	38.07		
		Additional 4-Wire 64Kbps Digital Grade Loop in same DS1 Interoffice Transport Combination - Zone 3		3	UNCDX	UDL64	67.26	489.04	337.51					38.07	38.07		
		Additional OCU-DP COCI (data) - in combination - per month (2.4-64kbs)			UNCDX	1D1DD	2.00	15.76	11.28								
		Nonrecurring Currently Combined Network Elements Switch -As-Is Charge			UNC1X	UNCCC		21.75	21.75	32.28	10.96			38.07	38.07		
	EXTENDED 4-WIRE DS1 DIGITAL EXTENDED LOOP WITH DEDICATED DS1 INTEROFFICE TRANSPORT																
		4-Wire DS1 Digital Loop in Combination - Zone 1		1	UNC1X	USLXX	47.60	714.84	421.47					38.07	38.07		
		4-Wire DS1 Digital Loop in Combination - Zone 2		2	UNC1X	USLXX	84.36	714.84	421.47					38.07	38.07		
		4-Wire DS1 Digital Loop in Combination - Zone 3		3	UNC1X	USLXX	134.29	714.84	421.47					38.07	38.07		
		Interoffice Transport - Dedicated - DS1 combination - Per Mile Per Month			UNC1X	1L5XX	0.5753										
		Interoffice Transport - Dedicated - DS1 combination - Facility Termination Per Month			UNC1X	U1TF1	71.29	217.17	163.75					38.07	38.07		
		Nonrecurring Currently Combined Network Elements Switch -As-Is Charge			UNC1X	UNCCC		21.75	21.75	32.28	10.96			38.07	38.07		
	EXTENDED 4-WIRE DS1 DIGITAL EXTENDED LOOP WITH DEDICATED DS3 INTEROFFICE TRANSPORT																
		First DS1Loop in Combination - Zone 1		1	UNC1X	USLXX	47.60	714.84	421.47					38.07	38.07		
		First DS1Loop in Combination - Zone 2		2	UNC1X	USLXX	84.36	714.84	421.47					38.07	38.07		
		First DS1Loop in Combination - Zone 3		3	UNC1X	USLXX	134.29	714.84	421.47					38.07	38.07		
		Interoffice Transport - Dedicated - DS3 combination - Per Mile Per Month			UNC3X	1L5XX	12.98										
		Interoffice Transport - Dedicated - DS3 - Facility Termination per month			UNC3X	U1TF3	720.38	794.94	579.55					38.07	38.07		
		3/1Channel System in combination per month			UNC3X	MQ3	233.10	403.97	234.40								
		DS1 COCI in combination per month			UNC1X	UC1D1	16.07	13.09	9.38								
		Additional DS1Loop in DS3 Interoffice Transport Combination - Zone 1		1	UNC1X	USLXX	47.60	714.84	421.47					38.07	38.07		
		Additional DS1Loop in DS3 Interoffice Transport Combination - Zone 2		2	UNC1X	USLXX	84.36	714.84	421.47					38.07	38.07		
		Additional DS1Loop in DS3 Interoffice Transport Combination - Zone 3		3	UNC1X	USLXX	134.29	714.84	421.47					38.07	38.07		
		Additoinal DS1 COCI in combination per month			UNC1X	UC1D1	16.07	13.09	9.38								
		Nonrecurring Currently Combined Network Elements Switch -As-Is Charge			UNC3X	UNCCC		21.75	21.75	32.28	10.96			38.07	38.07		
	EXTENDED 2-WIRE VOICE GRADE EXTENDED LOOP/ 2 WIRE VOICE GRADE INTEROFFICE TRANSPORT																
		2-WireVG Loop in combination - Zone 1		1	UNCVX	UEAL2	14.97	142.97	106.56								
		2-WireVG Loop in combination - Zone 2		2	UNCVX	UEAL2	25.93	142.97	106.56								
		2-WireVG Loop in combination - Zone 3		3	UNCVX	UEAL2	40.81	142.97	106.56								

UNBUNDLED NETWORK ELEMENTS - North Carolina														Attachment: 2		Exhibit: A	
CATEGORY		RATE ELEMENTS	Interim	Zone	BCS	USOC	RATES ($)					Svc Order Submitted Elec per LSR	Svc Order Submitted Manually per LSR	Incremental Charge - Manual Svc Order vs. Electronic-1st	Incremental Charge - Manual Svc Order vs. Electronic-Add'l	Incremental Charge - Manual Svc Order vs. Electronic-Disc 1st	Incremental Charge - Manual Svc Order vs. Electronic-Disc Add'l
							Rec	Nonrecurring		Nonrecurring Disconnect		OSS Rates ($)					
								First	Add'l	First	Add'l	SOMEC	SOMAN	SOMAN	SOMAN	SOMAN	SOMAN
		Interoffice Transport - 2-wire VG - Dedicated- Per Mile Per Month			UNCVX	1L5XX	0.0282										
		Interoffice Transport - 2-wire VG - Dedicated - Facility Termination per month			UNCVX	U1TV2	18.00	137.48	52.58					38.07	38.07		
		Nonrecurring Currently Combined Network Elements Switch -As-Is Charge			UNCVX	UNCCC		21.75	21.75	32.28	10.96			38.07	38.07		
	EXTENDED 4-WIRE VOICE GRADE EXTENDED LOOP/ 4 WIRE VOICE GRADE INTEROFFICE TRANSPORT																
		4-WireVG Loop in combination - Zone 1		1	UNCVX	UEAL4	21.32	288.47	237.45								
		4-WireVG Loop in combination - Zone 2		2	UNCVX	UEAL4	36.27	288.47	237.45								
		4-WireVG Loop in combination - Zone 3		3	UNCVX	UEAL4	56.57	288.47	237.45								
		Interoffice Transport - 4-wire VG - Dedicated - Per Mile Per Month			UNCVX	1L5XX	0.0282										
		Interoffice Transport - 4-wire VG - Dedicated - Facility Termination per month			UNCVX	U1TV4	22.16	106.11	65.95					38.07	38.07		
		Nonrecurring Currently Combined Network Elements Switch -As-Is Charge			UNCVX	UNCCC		21.75	21.75	32.28	10.96			38.07	38.07		
	EXTENDED DS3 DIGITAL EXTENDED LOOP WITH DEDICATED DS3 INTEROFFICE TRANSPORT																
		DS3 Local Loop in combination - per mile per month			UNC3X	1L5ND	13.33										
		DS3 Local Loop in combination - Facility Termination per month			UNC3X	UE3PX	450.69	1,071.00	646.12								
		Interoffice Transport - Dedicated - DS3 - Per Mile per month			UNC3X	1L5XX	12.98										
		Interoffice Transport - Dedicated - DS3 combination - Facility Termination per month			UNC3X	U1TF3	720.38	794.94	579.55					38.07	38.07		
		Nonrecurring Currently Combined Network Elements Switch -As-Is Charge			UNC3X	UNCCC		21.75	21.75	32.28	10.96			38.07	38.07		
	EXTENDED STS-1 DIGITAL EXTENDED LOOP WITH DEDICATED STS-1 INTEROFFICE TRANSPORT																
		STS-1 Local Lolp in combination - per mile per month			UNCSX	1L5ND	13.33										
		STS-1 Local Loop in combination - Facility Termination per month			UNCSX	UDLS1	464.26	1,071.00	646.12								
		Interoffice Transport - Dedicated - STS-1 combination - per mile per month			UNCSX	1L5XX	6.14										
		Interoffice Transport - Dedicated - STS-1 combination - Facility Termination per month			UNCSX	U1TFS	790.37	642.23	408.89					38.07	38.07		
		Nonrecurring Currently Combined Network Elements Switch -As-Is Charge			UNCSX	UNCCC		21.75	21.75	32.28	10.96			38.07	38.07		
	EXTENDED 2-WIRE ISDN EXTENDED LOOP WITH DS1 INTEROFFICE TRANSPORT																
		First 2-Wire ISDN Loop in Combination - Zone 1		1	UNCNX	U1L2X	19.42	325.91	251.31					38.07	38.07		
		First 2-Wire ISDN Loop in Combination - Zone 2		2	UNCNX	U1L2X	32.88	325.91	251.31					38.07	38.07		
		First 2-Wire ISDN Loop in Combination - Zone 3		3	UNCNX	U1L2X	51.14	325.91	251.31					38.07	38.07		
		Interoffice Transport - Dedicated - DS1 combination - per mile per month			UNC1X	1L5XX	0.5753										
		Interoffice Transport - Dedicated - DS1 combination - Facility Termination per month			UNC1X	U1TF1	71.29	217.17	163.75					38.07	38.07		
		1/0 Channel System in combination - per month			UNC1X	MQ1	146.69	197.78	140.06								
		2-wire ISDN COCI (BRITE) - in combination - per month			UNCNX	UC1CA	3.59	15.76	11.28								
		Additional 2-wire ISDN Loop in same DS1Interoffice Transport Combination - Zone 1		1	UNCNX	U1L2X	19.42	325.91	251.31					38.07	38.07		
		Additional 2-wire ISDN Loop in same DS1Interoffice Transport Combination - Zone 2		2	UNCNX	U1L2X	32.88	325.91	251.31					38.07	38.07		
		Additional 2-wire ISDN Loop in same DS1Interoffice Transport Combination - Zone 3		3	UNCNX	U1L2X	51.14	325.91	251.31					38.07	38.07		
		Additional 2-wire ISDN COCI (BRITE) - in combination- per month			UNCNX	UC1CA	3.59	15.76	11.28								
		Nonrecurring Currently Combined Network Elements Switch -As-Is Charge			UNC1X	UNCCC		21.75	21.75	32.28	10.96			38.07	38.07		
	EXTENDED 4-WIRE DS1 DIGITAL EXTENDED LOOP WITH DEDICATED STS-1 INTEROFFICE TRANSPORT																
		First DS1 Loop Combination - Zone 1		1	UNC1X	USLXX	47.60	714.84	421.47					38.07	38.07		
		First DS1 Loop Combination - Zone 2		2	UNC1X	USLXX	84.36	714.84	421.47					38.07	38.07		
		First DS1 Loop Combination - Zone 3		3	UNC1X	USLXX	134.29	714.84	421.47					38.07	38.07		

UNBUNDLED NETWORK ELEMENTS - North Carolina

CATEGORY	RATE ELEMENTS	Interim	Zone	BCS	USOC	RATES ($)					Svc Order Submitted Elec per LSR	Svc Order Submitted Manually per LSR	Attachment: 2		Exhibit: A	
													Incremental Charge - Manual Svc Order vs. Electronic-1st	Incremental Charge - Manual Svc Order vs. Electronic-Add'l	Incremental Charge - Manual Svc Order vs. Electronic-Disc 1st	Incremental Charge - Manual Svc Order vs. Electronic-Disc Add'l
						Rec	Nonrecurring		Nonrecurring Disconnect		OSS Rates ($)					
							First	Add'l	First	Add'l	SOMEC	SOMAN	SOMAN	SOMAN	SOMAN	SOMAN
	Interoffice Transport - Dedicated - STS-1 combination - Per Mile Per Month			UNCSX	1L5XX	6.14										
	Interoffice Transport - Dedicated - STS-1 combination - Facility Termination per month			UNCSX	U1TFS	790.37	642.23	408.89					38.07	38.07		
	3/1 Channel System in combination per month			UNCSX	MQ3	233.10	403.97	234.40								
	DS1 COCI in combination per month			UNC1X	UC1D1	16.07	13.09	9.38								
	Additional DS1Loop in the same STS-1 Interoffice Transport Combination - Zone 1		1	UNC1X	USLXX	47.60	714.84	421.47					38.07	38.07		
	Additional DS1Loop in the same STS-1 Interoffice Transport Combination - Zone 2		2	UNC1X	USLXX	84.36	714.84	421.47					38.07	38.07		
	Additional DS1Loop in the same STS-1 Interoffice Transport Combination - Zone 3		3	UNC1X	USLXX	134.29	714.84	421.47					38.07	38.07		
	DS1 COCI in combination per month			UNC1X	UC1D1	16.07	13.09	9.38								
	Nonrecurring Currently Combined Network Elements Switch -As-Is Charge			UNCSX	UNCCC		21.75	21.75	32.28	10.96			38.07	38.07		
	EXTENDED 4-WIRE 56 KBPS DIGITAL EXTENDED LOOP WITH 56 KBPS INTEROFFICE TRANSPORT															
	4-wire 56 kbps Local Loop in combination - Zone 1		1	UNCDX	UDL56	25.32	489.04	337.51								
	4-wire 56 kbps Local Loop in combination - Zone 2		2	UNCDX	UDL56	43.11	489.04	337.51								
	4-wire 56 kbps Local Loop in combination - Zone 3		3	UNCDX	UDL56	67.26	489.04	337.51								
	Interoffice Transport - Dedicated - 4-wire 56 kbps combination - Per Mile per month			UNCDX	1L5XX	0.0282										
	Interoffice Transport - Dedicated - 4-wire 56 kbps combination - Facility Termination per month			UNCDX	U1TD5	17.40	137.48	52.58					38.07	38.07		
	Nonrecurring Currently Combined Network Elements Switch -As-Is Charge			UNCDX	UNCCC		21.75	21.75	32.28	10.96			38.07	38.07		
	EXTENDED 4-WIRE 64 KBPS DIGITAL EXTENDED LOOP WITH 64 KBPS INTEROFFICE TRANSPORT															
	4-wire 64 kbps Lcoal Loop in Combination - Zone 1		1	UNCDX	UDL64	25.32	489.04	337.51								
	4-wire 64 kbps Lcoal Loop in Combination - Zone 2		2	UNCDX	UDL64	43.11	489.04	337.51								
	4-wire 64 kbps Lcoal Loop in Combination - Zone 3		3	UNCDX	UDL64	67.26	489.04	337.51								
	Interoffice Transport - Dedicated - 4-wire 64 kbps combination - Per Mile per month			UNCDX	1L5XX	0.0282										
	Interoffice Transport - Dedicated - 4-wire 64 kbps combination - Facility Termination per month			UNCDX	U1TD6	17.40	137.48	52.58					38.07	38.07		
	Nonrecurring Currently Combined Network Elements Switch -As-Is Charge			UNCDX	UNCCC		21.75	21.75	32.28	10.96			38.07	38.07		
	EXTENDED 2-WIRE VOICE GRADE LOOP WITH DS1 INTEROFFICE TRANSPORT w/ 3/1 MUX															
	First 2-wire VG Loop (SL2) in Combination - Zone 1		1	UNCVX	UEAL2	14.97	142.97	106.56					38.07	38.07		
	First 2-wire VG Loop (SL2) in Combination - Zone 2		2	UNCVX	UEAL2	25.93	142.97	106.56					38.07	38.07		
	First 2-wire VG Loop (SL2) in Combination - Zone 3		3	UNCVX	UEAL2	40.81	142.97	106.56					38.07	38.07		
	First Interoffice Transport - Dedicated - DS1 combination - Per Mile			UNC1X	1L5XX	0.5753										
	First Interoffice Transport - Dedicated - DS1 combination - Facility Termination per month			UNC1X	U1TF1	71.29	217.17	163.75					38.07	38.07		
	Per each DS1 Channelization System Per Month			UNC1X	MQ1	146.69	197.78	140.06								
	Per each Voice Grade COCI - Per Month per month			UNCVX	1D1VG	1.27	13.09	9.38								
	3/1 Channel System in combination per month			UNC3X	MQ3	233.10	403.97	234.40								
	Per each DS1 COCI in combination per month			UNC1X	UC1D1	16.07	13.09	9.38								
	Each Additional 2-Wire VG Loop(SL 2) in the same DS1 Interoffice Transport Combination - Zone 1		1	UNCVX	UEAL2	14.97	142.97	106.56					38.07	38.07		
	Each Additional 2-Wire VG Loop(SL2) in the same DS1 Interoffice Transport Combination - Zone 2		2	UNCVX	UEAL2	25.93	142.97	106.56					38.07	38.07		
	Each Additional 2-Wire VG Loop(SL2) in the same DS1 Interoffice Transport Combination - Zone 3		3	UNCVX	UEAL2	40.81	142.97	106.56					38.07	38.07		
	Each Additional Voice Grade COCI in combination - per month			UNCVX	1D1VG	1.27	13.09	9.38								
	Each Additional DS1 Interoffice Channel per mile in same 3/1 Channel System per month			UNC1X	1L5XX	0.5753										
	Each Additional DS1 Interoffice Channel Facility Termination in same 3/1 Channel System per month			UNC1X	U1TF1	71.29	217.17	163.75					38.07	38.07		
	Each Additional DS1 COCI combination per month			UNC1X	UC1D1	16.07	13.09	9.38								

UNBUNDLED NETWORK ELEMENTS - North Carolina														Attachment: 2		Exhibit: A	
CATEGORY		RATE ELEMENTS	Interim	Zone	BCS	USOC	RATES ($)					Svc Order Submitted Elec per LSR	Svc Order Submitted Manually per LSR	Incremental Charge - Manual Svc Order vs. Electronic-1st	Incremental Charge - Manual Svc Order vs. Electronic-Add'l	Incremental Charge - Manual Svc Order vs. Electronic-Disc 1st	Incremental Charge - Manual Svc Order vs. Electronic-Disc Add'l
							Rec	Nonrecurring		Nonrecurring Disconnect		OSS Rates ($)					
								First	Add'l	First	Add'l	SOMEC	SOMAN	SOMAN	SOMAN	SOMAN	SOMAN
		Nonrecurring Currently Combined Network Elements Switch -As-Is Charge			UNC1X	UNCCC		21.75	21.75	32.28	10.96			38.07	38.07		
	EXTENDED 4-WIRE VOICE GRADE LOOP WITH DEDICATED DS1 INTEROFFICE TRANSPORT w/ 3/1 MUX																
		First 4-Wire Analog Voice Grade Local Loop in Combination - Zone 1		1	UNCVX	UEAL4	21.32	288.47	237.45					38.07	38.07		
		First 4-Wire Analog Voice Grade Local Loop in Combination - Zone 2		2	UNCVX	UEAL4	36.27	288.47	237.45					38.07	38.07		
		First 4-Wire Analog Voice Grade Local Loop in Combination - Zone 3		3	UNCVX	UEAL4	56.57	288.47	237.45					38.07	38.07		
		First Interoffice Transport - Dedicated - DS1 combination - Per Mile Per Month			UNC1X	1L5XX	0.5753										
		First Interoffice Transport - Dedicated - DS1 - Facility Termination Per Month			UNC1X	U1TF1	71.29	217.17	163.75					38.07	38.07		
		Per each 1/0 Channel System in combination Per Month			UNC1X	MQ1	146.69	197.78	140.06								
		Per each Voice Grade COCI in combination - per month			UNCVX	1D1VG	1.27	13.09	9.38								
		3/1 Channel System in combination per month			UNC3X	MQ3	233.10	403.97	234.40								
		Per each DS1 COCI in combination per month			UNC1X	UC1D1	16.07	13.09	9.38								
		Additional 4-Wire Analog Voice Grade Loop in same DS1 Interoffice Transport Combination - Zone 1		1	UNCVX	UEAL4	21.32	288.47	237.45					38.07	38.07		
		Additional 4-Wire Analog Voice Grade Loop in same DS1 Interoffice Transport Combination - Zone 2		2	UNCVX	UEAL4	36.27	288.47	237.45					38.07	38.07		
		Additional 4-Wire Analog Voice Grade Loop in same DS1 Interoffice Transport Combination - Zone 3		3	UNCVX	UEAL4	56.57	288.47	237.45					38.07	38.07		
		Each Additional DS1 Interoffice Channel per mile in same 3/1 Channel System per month			UNC1X	1L5XX	0.5753										
		Each Additional DS1 Interoffice Channel Facility Termination in same 3/1 Channel System per month			UNC1X	U1TF1	71.29	217.17	163.75					38.07	38.07		
		Additional Voice Grade COCI - in combination - per month			UNCVX	1D1VG	1.27	13.09	9.38								
		Nonrecurring Currently Combined Network Elements Switch -As-Is Charge			UNC1X	UNCCC		21.75	21.75	32.28	10.96			38.07	38.07		
	EXTENDED 4-WIRE 56 KBPS DIGITAL LOOP WITH DEDICATED DS1 INTEROFFICE TRANSPORT w/ 3/1 MUX																
		First 4-Wire 56Kbps Digital Grade Local Loop in Combination - Zone 1		1	UNCDX	UDL56	25.32	489.04	337.51					38.07	38.07		
		First 4-Wire 56Kbps Digital Grade Local Loop in Combination - Zone 2		2	UNCDX	UDL56	43.11	489.04	337.51					38.07	38.07		
		First 4-Wire 56Kbps Digital Grade Local Loop in Combination - Zone 3		3	UNCDX	UDL56	67.26	489.04	337.51					38.07	38.07		
		First Interoffice Transport - Dedicated - DS1 combination - Per Mile Per Month			UNC1X	1L5XX	0.5753										
		First Interoffice Transport - Dedicated - DS1 - combination Facility Termination Per Month			UNC1X	U1TF1	71.29	217.17	163.75					38.07	38.07		
		Per each 1/0 Channel System in combination Per Month			UNC1X	MQ1	146.69	197.78	140.06								
		Per each OCU-DP COCI (data) COCI per month (2.4-64kbs)			UNCDX	1D1DD	2.00	15.76	11.28								
		3/1 Channel System in combination per month			UNC3X	MQ3	233.10	403.97	234.40								
		Per each DS1 COCI in combination per month			UNC1X	UC1D1	16.07	13.09	9.38								
		Additional 4-Wire 56Kbps Digital Grade Loop in same DS1 Interoffice Transport Combination - Zone 1		1	UNCDX	UDL56	25.32	489.04	337.51					38.07	38.07		
		Additional 4-Wire 56Kbps Digital Grade Loop in same DS1 Interoffice Transport Combination - Zone 2		2	UNCDX	UDL56	43.11	489.04	337.51					38.07	38.07		
		Additional 4-Wire 56Kbps Digital Grade Loop in same DS1 Interoffice Transport Combination - Zone 3		3	UNCDX	UDL56	67.26	489.04	337.51					38.07	38.07		
		OCU-DP COCI (data) COCI in combination per month (2.4-64kbs)			UNCDX	1D1DD	2.00	15.76	11.28								
		Each Additional DS1 Interoffice Channel per mile in same 3/1 Channel System per month			UNC1X	1L5XX	0.5753										
		Each Additional DS1 Interoffice Channel Facility Termination in same 3/1 Channel System per month			UNC1X	U1TF1	71.29	217.17	163.75					38.07	38.07		
		Each Additional DS1 COCI in the same 3/1 channel system combination per month			UNC1X	UC1D1	16.07	13.09	9.38								

UNBUNDLED NETWORK ELEMENTS - North Carolina														Attachment: 2		Exhibit: A	
CATEGORY		RATE ELEMENTS	Interim	Zone	BCS	USOC	RATES ($)					Svc Order Submitted Elec per LSR	Svc Order Submitted Manually per LSR	Incremental Charge - Manual Svc Order vs. Electronic-1st	Incremental Charge - Manual Svc Order vs. Electronic-Add'l	Incremental Charge - Manual Svc Order vs. Electronic-Disc 1st	Incremental Charge - Manual Svc Order vs. Electronic-Disc Add'l
							Rec	Nonrecurring		Nonrecurring Disconnect		OSS Rates ($)					
								First	Add'l	First	Add'l	SOMEC	SOMAN	SOMAN	SOMAN	SOMAN	SOMAN
		Nonrecurring Currently Combined Network Elements Switch -As-Is Charge			UNC1X	UNCCC		21.75	21.75	32.28	10.96			38.07	38.07		
	EXTENDED 4-WIRE 64 KBPS DIGITAL LOOP WITH DEDICATED DS1 INTEROFFICE TRANSPORT w/ 3/1 MUX																
		First 4-Wire 64Kbps Digital Grade Loop in a DS1 Interoffice Transport Combination - Zone 1		1	UNCDX	UDL64	25.32	489.04	337.51					38.07	38.07		
		First 4-Wire 64Kbps Digital Grade Loop in a DS1 Interoffice Transport Combination - Zone 2		2	UNCDX	UDL64	43.11	489.04	337.51					38.07	38.07		
		First 4-Wire 64Kbps Digital Grade Loop in a DS1 Interoffice Transport Combination - Zone 3		3	UNCDX	UDL64	67.26	489.04	337.51					38.07	38.07		
		First Interoffice Transport - Dedicated - DS1 combination - Per Mile Per Month			UNC1X	1L5XX	0.5753										
		First Interoffice Transport - Dedicated - DS1 combination - Facility Termination Per Month			UNC1X	U1TF1	71.29	217.17	163.75					38.07	38.07		
		Per each Channel System 1/0 in combination Per Month			UNC1X	MQ1	146.69	197.78	140.06								
		Per each OCU-DP COCI (data) in combination - per month (2.4-64kbs)			UNCDX	1D1DD	2.00	15.76	11.28								
		3/1 Channel System in combination per month			UNC3X	MQ3	233.10	403.97	234.40								
		Per each DS1 COCI in combination per month			UNC1X	UC1D1	16.07	13.09	9.38								
		Additional 4-Wire 64Kbps Digital Grade Loop in same DS1 Interoffice Transport Combination - Zone 1		1	UNCDX	UDL64	25.32	489.04	337.51					38.07	38.07		
		Additional 4-Wire 64Kbps Digital Grade Loop in same DS1 Interoffice Transport Combination - Zone 2		2	UNCDX	UDL64	43.11	489.04	337.51					38.07	38.07		
		Additional 4-Wire 64Kbps Digital Grade Loop in same DS1 Interoffice Transport Combination - Zone 3		3	UNCDX	UDL64	67.26	489.04	337.51					38.07	38.07		
		Additional OCU-DP COCI (data) - DS1 to DS0 Channel System combination - per month (2.4-64kbs)			UNCDX	1D1DD	2.00	15.76	11.28								
		Each Additional DS1 Interoffice Channel per mile in same 3/1 Channel System per month			UNC1X	1L5XX	0.5753										
		Each Additional DS1 Interoffice Channel Facility Termination in same 3/1 Channel System per month			UNC1X	U1TF1	71.29	217.17	163.75					38.07	38.07		
		Each Additional DS1 COCI in the same 3/1 channel system combination per month			UNC1X	UC1D1	16.07	13.09	9.38								
		Nonrecurring Currently Combined Network Elements Switch -As-Is Charge			UNC1X	UNCCC		21.75	21.75	32.28	10.96			38.07	38.07		
	EXTENDED 2-WIRE ISDN LOOP WITH DS1 INTEROFFICE TRANSPORT w/ 3/1 MUX																
		First 2-Wire ISDN Loop in a DS1 Interoffice Combination Transport - Zone 1		1	UNCNX	U1L2X	19.42	325.91	251.31					38.07	38.07		
		First 2-Wire ISDN Loop in a DS1 Interoffice Combination Transport - Zone 2		2	UNCNX	U1L2X	32.88	325.91	251.31					38.07	38.07		
		First 2-Wire ISDN Loop in a DS1 Interoffice Combination Transport - Zone 3		3	UNCNX	U1L2X	51.14	325.91	251.31					38.07	38.07		
		First Interoffice Transport - Dedicated - DS1 combination - Per Mile per month			UNC1X	1L5XX	0.5753										
		First Interoffice Transport - Dedicated - DS1 combination - Facility Termination per month			UNC1X	U1TF1	71.29	217.17	163.75					38.07	38.07		
		Per each Channel System 1/0 in combination - per month			UNC1X	MQ1	146.69	197.78	140.06								
		Per each 2-wire ISDN COCI (BRITE) in combination - per month			UNCNX	UC1CA	3.59	15.76	11.28								
		3/1 Channel System in combination per month			UNC3X	MQ3	233.10	403.97	234.40								
		Per each DS1 COCI in combination per month			UNC1X	UC1D1	16.07	13.09	9.38								
		Additional 2-wire ISDN Loop in same DS1Interoffice Transport Combination - Zone 1		1	UNCNX	U1L2X	19.42	325.91	251.31					38.07	38.07		
		Additional 2-wire ISDN Loop in same DS1Interoffice Transport Combination - Zone 2		2	UNCNX	U1L2X	32.88	325.91	251.31					38.07	38.07		
		Additional 2-wire ISDN Loop in same DS1Interoffice Transport Combination - Zone 3		3	UNCNX	U1L2X	51.14	325.91	251.31					38.07	38.07		
		Additional 2-wire ISDN COCI (BRITE) in same 1/0 channel system combination- per month			UNCNX	UC1CA	3.59	15.76	11.28								

CATEGORY	RATE ELEMENTS	Interim	Zone	BCS	USOC	RATES ($) Rec	Nonrecurring First	Nonrecurring Add'l	Nonrecurring Disconnect First	Nonrecurring Disconnect Add'l	Svc Order Submitted Elec per LSR	Svc Order Submitted Manually per LSR	Attachment: 2 Incremental Charge - Manual Svc Order vs. Electronic-1st	Attachment: 2 Incremental Charge - Manual Svc Order vs. Electronic-Add'l	Exhibit: A Incremental Charge - Manual Svc Order vs. Electronic-Disc 1st	Exhibit: A Incremental Charge - Manual Svc Order vs. Electronic-Disc Add'l
											OSS Rates ($)					
											SOMEC	SOMAN	SOMAN	SOMAN	SOMAN	SOMAN
	Each Additional DS1 Interoffice Channel per mile in same 3/1 Channel System per month			UNC1X	1L5XX	0.5753										
	Each Additional DS1 Interoffice Channel Facility Termination in same 3/1 Channel System per month			UNC1X	U1TF1	71.29	217.17	163.75					38.07	38.07		
	Each Additional DS1 COCI in the same 3/1 channel system combination per month			UNC1X	UC1D1	16.07	13.09	9.38								
	Nonrecurring Currently Combined Network Elements Switch -As-Is Charge			UNC1X	UNCCC		21.75	21.75	32.28	10.96			38.07	38.07		
	EXTENDED 4-WIRE DS1 LOOP WITH DEDICATED DS1 INTEROFFICE TRANSPORT w/ 3/1 MUX															
	First 4-wire DS1 Digital Lcoal Loop in Combination - Zone 1		1	UNC1X	USLXX	47.60	714.84	421.47					38.07	38.07		
	First 4-wire DS1 Digital Lcoal Loop in Combination - Zone 2		2	UNC1X	USLXX	84.36	714.84	421.47					38.07	38.07		
	First 4-wire DS1 Digital Lcoal Loop in Combination - Zone 3		3	UNC1X	USLXX	134.29	714.84	421.47					38.07	38.07		
	First Interoffice Transport - Dedicated - DS1 combination - Per Mile Per Month			UNC1X	1L5XX	0.5753										
	First Interoffice Transport - Dedicated - DS1 combination - Facility Termination Per Month			UNC1X	U1TF1	71.29	217.17	163.75					38.07	38.07		
	3/1 Channel System in combination per month			UNC3X	MQ3	233.10	403.97	234.40								
	Per each DS1 COCI combination per month			UNC1X	UC1D1	16.07	13.09	9.38								
	Each Additional DS1 Interoffice Channel per mile in same 3/1 Channel System per month			UNC1X	1L5XX	0.5753										
	Each Additional DS1 Interoffice Channel Facility Termination in same 3/1 Channel System per month			UNC1X	U1TF1	71.29	217.17	163.75					38.07	38.07		
	Each Additional DS1 COCI in the same 3/1 channel system combination per month			UNC1X	UC1D1	16.07	13.09	9.38								
	Additional 4-Wire DS1 Digital Local Loop in Combination - Zone 1		1	UNC1X	USLXX	47.60	714.84	421.47					38.07	38.07		
	Additional 4-Wire DS1 Digital Local Loop in Combination - Zone 2		2	UNC1X	USLXX	84.36	714.84	421.47					38.07	38.07		
	Additional 4-Wire DS1 Digital Local Loop in Combination - Zone 3		3	UNC1X	USLXX	134.29	714.84	421.47					38.07	38.07		
	Nonrecurring Currently Combined Network Elements Switch -As-Is Charge			UNC1X	UNCCC		21.75	21.75	32.28	10.96			38.07	38.07		
	EXTENDED 4-WIRE 56 KBPS DIGITAL EXTENDED LOOP WITH DS0 INTEROFFICE TRANSPORT															
	First 4-wire 56 kbps Local Loop in combination - Zone 1		1	UNCDX	UDL56	25.32	489.04	337.51								
	First 4-wire 56 kbps Local Loop in combination - Zone 2		2	UNCDX	UDL56	43.11	489.04	337.51								
	First 4-wire 56 kbps Local Loop in combination - Zone 3		3	UNCDX	UDL56	67.26	489.04	337.51								
	First 4-wiree 56 kbps Interoffice Transport - Dedicated - Per Mile per month			UNCDX	1L5XX	0.0282										
	First 4-wire 56 kbps Interoffice Transport - Dedicated - Facility Termination per month			UNCDX	U1TD5	17.40	137.48	52.58					38.07	38.07		
	Nonrecurring Currently Combined Network Elements Switch -As-Is Charge			UNCDX	UNCCC		21.75	21.75	32.28	10.96			38.07	38.07		
	EXTENDED 4-WIRE 64 KBPS DIGITAL EXTENDED LOOP WITH DS0 INTEROFFICE TRANSPORT															
	First 4-wire 64 kbps Local Loop in combination - Zone 1		1	UNCDX	UDL64	25.32	489.04	337.51								
	First 4-wire 64 kbps Local Loop in combination - Zone 2		2	UNCDX	UDL64	43.11	489.04	337.51								
	First 4-wire 64 kbps Local Loop in combination - Zone 3		3	UNCDX	UDL64	67.26	489.04	337.51								
	First I4-wire 65 kbps Interoffice Transport - Dedicated - Per Mile per month			UNCDX	1L5XX	0.0282										
	First 4-wire 64 kbps Interoffice Transport - Dedicated - Facility Termination per month			UNCDX	U1TD6	17.40	137.48	52.58					38.07	38.07		
	Nonrecurring Currently Combined Network Elements Switch -As-Is Charge			UNCDX	UNCCC		21.75	21.75	32.28	10.96			38.07	38.07		
ADDITIONAL NETWORK ELEMENTS																
	When used as a part of a currently combined facility, the non-recurrng charges do not apply, but a Switch As Is charge does apply.															
	When used as ordinarily combined network elements in All States, the non-recurring charges apply and the Switch As Is Charge does not.															
	Nonrecurring Currently Combined Network Elements "Switch As Is" Charge (One applies to each combination)															
	Nonrecurring Currently Combined Network Elements Switch -As-Is Charge - 2 wire/4-Wire VG			UNCVX	UNCCC		21.75	21.75	32.28	10.96			26.94	12.76		

UNBUNDLED NETWORK ELEMENTS - North Carolina														Attachment: 2		Exhibit: A	
CATEGORY		RATE ELEMENTS	Interim	Zone	BCS	USOC	RATES ($)					Svc Order Submitted Elec per LSR	Svc Order Submitted Manually per LSR	Incremental Charge - Manual Svc Order vs. Electronic-1st	Incremental Charge - Manual Svc Order vs. Electronic-Add'l	Incremental Charge - Manual Svc Order vs. Electronic-Disc 1st	Incremental Charge - Manual Svc Order vs. Electronic-Disc Add'l
							Rec	Nonrecurring		Nonrecurring Disconnect		OSS Rates ($)					
								First	Add'l	First	Add'l	SOMEC	SOMAN	SOMAN	SOMAN	SOMAN	SOMAN
		Nonrecurring Currently Combined Network Elements Switch -As-Is Charge - 56/64 kbps			UNCDX	UNCCC		21.75	21.75	32.28	10.96			26.94	12.76		
		Nonrecurring Currently Combined Network Elements Switch -As-Is Charge - DS1			UNC1X	UNCCC		21.75	21.75	32.28	10.96			26.94	12.76		
		Nonrecurring Currently Combined Network Elements Switch -As-Is Charge - DS3			UNC3X	UNCCC		21.75	21.75	32.28	10.96			26.94	12.76		
		Nonrecurring Currently Combined Network Elements Switch -As-Is Charge - STS1			UNCSX	UNCCC		21.75	21.75	32.28	10.96			26.94	12.76		
	Optional Features & Functions:																
		Clear Channel Capability Extended Frame Option - per DS1	I		U1TD1, ULDD1,UNC1X	CCOEF		0I	0I	0I	0I						
		Clear Channel Capability Super FrameOption - per DS1	I		U1TD1, ULDD1,UNC1X	CCOSF		0I	0I	0I	0I						
		Clear Channel Capability (SF/ESF) Option - Subsequent Activity - per DS1	I		ULDD1, U1TD1, UNC1X, USL	NRCCC		184.76S	23.8S	1.99S	0.78S			26.94	12.76		
		C-bit Parity Option - Subsequent Activity - per DS3	i		U1TD3, ULDD3, UE3, UNC3X	NRCC3		218.92S	7.66S	.7576S	0S			26.94	12.76		
	MULTIPLEXERS																
		DS1 to DS0 Channel System per month			UNC1X	MQ1	146.69	197.78	140.06					26.94	12.76		
		OCU-DP COCI (data) - DS1 to DS0 Channel System - per month (2.4-64kbs) used for a Local Loop			UDL	1D1DD	2.00	13.09	9.38								
		OCU-DP COCI (data) - DS1 to DS0 Channel System - per month (2.4-64kbs) used for connection to a channelized DS1 Local Channel in the same SWC as collocation			U1TUD	1D1DD	2.00	13.09	9.38								
		2-wire ISDN COCI (BRITE) - DS1 to DS0 Channel Systsem - per month for a Local Loop			UDN	UC1CA	3.59	13.09	9.38								
		2-wire ISDN COCI (BRITE) - DS1 to DS0 Channel Systsem - per month used for connection to a channelized DS1 Local Channel in the same SWC as collocation			U1TUB	UC1CA	3.59	13.09	9.38								
		Voice Grade COCI - DS1 to DS0 Channel System - per month used for a Local Loop			UEA	1D1VG	1.27	13.09	9.38								
		Voice Grade COCI - DS1 to DS0 Channel System - per month used for connection to a channelized DS1 Local Channel in the same SWC as collocation			U1TUC	1D1VG	1.27	13.09	9.38								
		DS3 to DS1 Channel System per month			UNC3X	MQ3	233.10	403.97	234.40					26.94	12.76		
		STS-1 to DS1 Channel System per month			UNCSX	MQ3	233.10	403.97	234.40					26.94	12.76		
		DS1 COCI used with Loop per month			USL	UC1D1	16.07	13.09	9.38								
		DS1 COCI (used for connection to a channelized DS1 Local Channel in the same SWC as collocation) per month			U1TUA	UC1D1	16.07	13.09	9.38								
		DS1 COCI used with Interoffice Channel per month			U1TD1	UC1D1	16.07	13.09	9.38								
		DS3 Interface Unit (DS1 COCI) used with Local Channel per month			ULDD1	UC1D1	16.07	13.09	9.38								
														26.94	12.76		
														26.94	12.76		
UNBUNDLED LOCAL EXCHANGE SWITCHING(PORTS)																	
	Exchange Ports																
	NOTE: Although the Port Rate includes all available features in GA, KY, LA & TN, the desired features will need to be ordered using retail USOCs																
	2-WIRE VOICE GRADE LINE PORT RATES (RES)																
		Exchange Ports - 2-Wire Analog Line Port- Res.			UEPSR	UEPRL	2.19	21.60	21.60					26.94	12.76		
		Exchange Ports - 2-Wire Analog Line Port with Caller ID - Res.			UEPSR	UEPRC	2.19	21.60	21.60					26.94	12.76		
		Exchange Ports - 2-Wire Analog Line Port outgoing only - Res.			UEPSR	UEPRO	2.19	21.60	21.60					26.94	12.76		
		Exchange Ports - 2-Wire VG unbundled res, low usage line port with Caller ID (LUM)			UEPSR	UEPAP	2.19	21.60	21.60					26.94	12.76		
		2-Wire voice unbundled Low Usage Line Port without Caller ID Capability			UEPSR	UEPRT	2.19	21.60	21.60					26.94	12.76		
		2-Wire Voice Grade Unbundled Port without Caller ID capability, North Carolina			UEPSR	UEPRZ	2.19	21.60	21.60								

CATEGORY	RATE ELEMENTS	Interim	Zone	BCS	USOC	RATES ($)					Svc Order Submitted Elec per LSR	Svc Order Submitted Manually per LSR	Incremental Charge - Manual Svc Order vs. Electronic-1st	Incremental Charge - Manual Svc Order vs. Electronic-Add'l	Incremental Charge - Manual Svc Order vs. Electronic-Disc 1st	Incremental Charge - Manual Svc Order vs. Electronic-Disc Add'l
						Rec	Nonrecurring		Nonrecurring Disconnect		OSS Rates ($)					
							First	Add'l	First	Add'l	SOMEC	SOMAN	SOMAN	SOMAN	SOMAN	SOMAN
	2-Wire Voice Grade Unbundled Port with Caller ID capability, North Carolina			UEPSR	UEPRY	2.19	21.60	21.60								
	Subsequent Activity			UEPSR	USASC	0.00	0.00	0.00					26.94	12.76		
FEATURES																
	All Available Vertical Features			UEPSR	UEPVF	3.40	0.00	0.00					26.94	12.76		
2-WIRE VOICE GRADE LINE PORT RATES (BUS)																
	Exchange Ports - 2-Wire Analog Line Port without Caller ID - Bus			UEPSB	UEPBL	2.19	21.60	21.60					26.94	12.76		
	Exchange Ports - 2-Wire VG unbundled Line Port with unbundled port with Caller+E484 ID - Bus.			UEPSB	UEPBC	2.19	21.60	21.60					26.94	12.76		
	Exchange Ports - 2-Wire Analog Line Port outgoing only - Bus.			UEPSB	UEPBO	2.19	21.60	21.60					26.94	12.76		
	Exhange Ports - 2-Wire VG unbundled incoming only port with Caller ID - Bus			UEPSB	UEPB1	2.19	21.60	21.60					26.94	12.76		
	2-Wire voice unbundled Incoming Only Port without Caller ID Capability			UEPSB	UEPBE	2.19	21.60	21.60					26.94	12.76		
	Subsequent Activity			UEPSB	USASC	0.00	0.00	0.00								
FEATURES																
	All Available Vertical Features			UEPSB	UEPVF	3.40	0.00	0.00					26.94	12.76		
EXCHANGE PORT RATES (DID & PBX)																
	2-Wire VG Unbundled 2-Way PBX Trunk - Res			UEPSE	UEPRD	2.18	21.60	21.60					26.94	12.76		
	2-Wire VG Line Side Unbundled 2-Way PBX Trunk - Bus			UEPSP	UEPPC	2.18	21.60	21.60					26.94	12.76		
	2-Wire VG Line Side Unbundled Outward PBX Trunk - Bus			UEPSP	UEPPO	2.18	21.60	21.60					26.94	12.76		
	2-Wire VG Line Side Unbundled Incoming PBX Trunk - Bus			UEPSP	UEPP1	2.18	21.60	21.60					26.94	12.76		
	2-Wire Analog Long Distance Terminal PBX Trunk - Bus			UEPSP	UEPLD	2.18	21.60	21.60					26.94	12.76		
	2-Wire Voice Unbundled PBX LD Terminal Ports			UEPSP	UEPLD	2.18	21.60	21.60					26.94	12.76		
	2-Wire Vice Unbundled 2-Way PBX Usage Port			UEPSP	UEPXA	2.18	21.60	21.60					26.94	12.76		
	2-Wire Voice Unbundled PBX Toll Terminal Hotel Ports			UEPSP	UEPXB	2.18	21.60	21.60					26.94	12.76		
	2-Wire Voice Unbundled PBX LD DDD Terminals Port			UEPSP	UEPXC	2.18	21.60	21.60					26.94	12.76		
	2-Wire Voice Unbundled PBX LD Terminal Switchboard Port			UEPSP	UEPXD	2.18	21.60	21.60					26.94	12.76		
	2-Wire Voice Unbundled PBX LD Terminal Switchboard IDD Capable Port			UEPSP	UEPXE	2.18	21.60	21.60					26.94	12.76		
	2-Wire Voice Unbundled 2-Way PBX Hotel/Hospital Economy Administrative Calling Port			UEPSP	UEPXL	2.18	21.60	21.60					26.94	12.76		
	2-Wire Voice Unbundled 2-Way PBX Hotel/Hospital Economy Room Calling Port			UEPSP	UEPXM	2.18	21.60	21.60					26.94	12.76		
	2-Wire Voice Unbundled 1-Way Outgoing PBX Hotel/Hospital Discount Room Calling Port			UEPSP	UEPXO	2.18	21.60	21.60					26.94	12.76		
	2-Wire Voice Unbundled 1-Way Outgoing PBX Measured Port			UEPSP	UEPXS	2.18	21.60	21.60					26.94	12.76		
	Subsequent Activity			UEPSP	USASC	0.00	0.00	0.00					26.94	12.76		
FEATURES																
	All Available Vertical Features			UEPSP UEPSE	UEPVF	3.40	0.00	0.00					26.94	12.76		
EXCHANGE PORT RATES (COIN)																
	Exchange Ports - Coin Port					2.59	21.60	21.60					26.94	12.76		
NOTE: Transmission/usage charges associated with POTS circuit switched usage will also apply to circuit switched voice and/or circuit switched data transmission by B-Channels associated with 2-wire ISDN ports.																
NOTE: Access to B Channel or D Channel Packet capabilities will be available only through BFR/New Business Request Process. Rates for the packet capabilities will be determined via the Bona Fide Request/New Business Request Process.																
UNBUNDLED LOCAL EXCHANGE SWITCHING(PORTS)																
EXCHANGE PORT RATES																
The DS1 Port rates below for 4-Wire DDITS Trunk Port and 4-Wire ISDN Port in this rate exhibit apply to the embedded base in place as of 10/2/03 until 4/1/04. After 4/1/04 these rates shall revert to tariff rates or a separate agreement.																
Requests for 4-Wire DDITS Trunk Ports with 4-Wire ISDN DS1 Ports after the effective date of this amendment shall be provided pursuant to a separate agreement or tariff at BellSouth's discretion.																
	Exchange Ports - 2-Wire DID Port			UEPEX	UEPP2	12.36	81.84	81.84					26.94	12.76		
	Exchange Ports - DDITS Port - 4-Wire DS1 Port with DID capability (E:4/1/2004)			UEPDD	UEPDD	123.65	116.59	69.92					26.94	12.76		
	Exchange Ports - 2-Wire ISDN Port (See Notes below.)			UEPTX, UEPSX	U1PMA	24.50	62.29	62.29					55.30	55.30		
	All Features Offered			UEPTX, UEPSX	UEPVF	3.40	0.00	0.00								
	Exchange Ports - 2-Wire ISDN Port -- Channel Profiles			UEPTX, UEPSX	U1UMA	0.00	0.00	0.00								
NOTE: Transmission/usage charges associated with POTS circuit switched usage will also apply to circuit switched voice and/or circuit switched data transmission by B-Channels associated with 2-wire ISDN ports.																
NOTE: Access to B Channel or D Channel Packet capabilities will be available only through BFR/New Business Request Process. Rates for the packet capabilities will be determined via the Bona Fide Request/New Business Request Process.																
EXCHANGE PORT RATES (continued)																

UNBUNDLED NETWORK ELEMENTS - North Carolina														Attachment: 2		Exhibit: A	
CATEGORY		RATE ELEMENTS	Interim	Zone	BCS	USOC	RATES ($)					Svc Order Submitted Elec per LSR	Svc Order Submitted Manually per LSR	Incremental Charge - Manual Svc Order vs. Electronic-1st	Incremental Charge - Manual Svc Order vs. Electronic-Add'l	Incremental Charge - Manual Svc Order vs. Electronic-Disc 1st	Incremental Charge - Manual Svc Order vs. Electronic-Disc Add'l
							Rec	Nonrecurring		Nonrecurring Disconnect		OSS Rates ($)					
								First	Add'l	First	Add'l	SOMEC	SOMAN	SOMAN	SOMAN	SOMAN	SOMAN
		Exchange Ports - 4-Wire ISDN DS1 Port with Detailed E911 Locator Capability (E:4/1/2004)			UEPEX	UEPEX	179.75	241.63	241.63					53.89	53.89		
		Exchange Ports - 4-Wire ISDN DS1 Port (E:4/1/2004)			UEPDX	UEPDX	179.75	241.63	241.63					53.89	53.89		
		Physical Collocation - DS1 Cross-Connects	I		UEPEX UEPDX	PE1P1	2.34	71.02	51.08					26.94	12.76		
		Virtual collocation - Special Access & UNE, cross-connect per DS1			UEPEX UEPDX	CNC1X	0.97	71.02	51.08					26.94	12.76		
	Detailed E911 with Locator Capability (required with UEPEX port)																
		Unbundled Exchange Ports, 4-Wire ISDN DS1 Port - E911 Locator Capability - Initial Profile Establishment per CLEC per State			UEPEX	UEP1A	0.00	1,802.00						26.94	12.76		
		Unbundled Exchange Ports, 4-Wire ISDN DS1 Port - E911 Locator Capability - Subsequent Profile Changes, Additions, Deletions			UEPEX	UEP1B	0.00	174.99						26.94	12.76		
	New or Additional PRI Telephone Numbers																
		Unbundled Exchange Ports, 4-Wire ISDN DS1 Port - E911 Locator Capability 2-way Telephone Numbers, per number in E911 profile [New or Additional]			UEPEX	UEP1C		1.17	1.17					26.94	12.76		
		Unbundled Exchange Ports, 4-Wire ISDN DS1 Port - E911 Locator Capability - Outdial Telephone Numbers, per number in E911 profile [New or Additional]			UEPEX	UEP1D		28.17	28.17					26.94	12.76		
		Unbundled Exchange Ports, 4-Wire ISDN DS1 Port - Inward Telephone Numbers - Inward Data Only Option [New or Additional]			UEPDX	UEP1E	0.00	1.17	1.17					26.94	12.76		
		Exchange Ports - 4-Wire ISDN DS1 Port - Subsequent [New] Inward Tel Numbers [Customer Testing Purposes]			UEPEX	PR7ZT	0.00	56.33	56.33					26.94	12.76		
	LOCAL NUMBER PORTABILITY																
		Local Number Portability (1 per port)			UEPEX UEPDX	LNPCN	1.75										
	INTERFACE (Provsioning Only)																
		Voice/Data			UEPEX	PR71V	0.00	0.00	0.00					26.94	12.76		
		Digital Data			UEPEX	PR71D	0.00	0.00	0.00					26.94	12.76		
		Inward Data			UEPDX	PR71E	0.00	0.00	0.00					26.94	12.76		
	New or Additional Channel																
		New or Additional - Voice/Data "B" Channel			UEPEX	PR7BV	0.00	36.92						26.94	12.76		
		New or Additional - Digital Data "B" Channel			UEPEX	PR7BF	0.00	36.92						26.94	12.76		
		New or Additional Inward Data "B" Channel			UEPDX	PR7BD	0.00	36.92						26.94	12.76		
		New or Additional Useage Sensitive Voice Data "B" Channel			UEPEX	PR7BS	0.00							26.94	12.76		
		New or Additional Useage Sensitive Digital Data "B" Channel			UEPEX	PR7BU	0.00							26.94	12.76		
		New or Additional PRI "D" Channel			UEPEX	PR7EX	0.00	36.92						26.94	12.76		
	CALL TYPES																
		Inward			UEPEX UEPDX	PR7C1	0.00	0.00	0.00					26.94	12.76		
		Outward			UEPEX	PR7CO	0.00	0.00	0.00					26.94	12.76		
		Two-way			UEPEX	PR7CC	0.00	0.00	0.00					26.94	12.76		
	UNBUNDLED PORT with REMOTE CALL FORWARDING CAPABILITY																
	UNBUNDLED REMOTE CALL FORWARDING SERVICE - RESIDENCE																
		Unbundled Remote Call Forwarding Service, Area Calling, Res			UEPVR	UERAC	2.19	21.60	21.60					26.94	12.76		
		Unbundled Remote Call Forwarding Service, Local Calling - Res			UEPVR	UERLC	2.19	21.60	21.60					26.94	12.76		
		Unbundled Remote Call Forwarding Service, InterLATA - Res			UEPVR	UERTE	2.19	21.60	21.60					26.94	12.76		
		Unbundled Remote Call Forwarding Service, IntraLATA - Res			UEPVR	UERTR	2.19	21.60	21.60					26.94	12.76		
	Non-Recurring																
		Unbundled Remote Call Forwarding Service - Conversion - Switch-as-is			UEPVR	USAC2		2.77	0.40					26.94	12.76		
		Unbundled Remote Call Forwarding Service - Conversion with allowed change (PIC and LPIC)			UEPVR	USACC		2.77	0.40								
	UNBUNDLED REMOTE CALL FORWARDING - Bus																
		Unbundled Remote Call Forwarding Service, Area Calling - Bus			UEPVB	UERAC	2.19	21.60	21.60					26.94	12.76		
		Unbundled Remote Call Forwarding Service, Local Calling - Bus			UEPVB	UERLC	2.19	21.60	21.60					26.94	12.76		

UNBUNDLED NETWORK ELEMENTS - North Carolina													Attachment: 2		Exhibit: A	
CATEGORY	RATE ELEMENTS	Interim	Zone	BCS	USOC	RATES ($)					Svc Order Submitted Elec per LSR	Svc Order Submitted Manually per LSR	Incremental Charge - Manual Svc Order vs. Electronic-1st	Incremental Charge - Manual Svc Order vs. Electronic-Add'l	Incremental Charge - Manual Svc Order vs. Electronic-Disc 1st	Incremental Charge - Manual Svc Order vs. Electronic-Disc Add'l
						Rec	Nonrecurring		Nonrecurring Disconnect		OSS Rates ($)					
							First	Add'l	First	Add'l	SOMEC	SOMAN	SOMAN	SOMAN	SOMAN	SOMAN
	Unbundled Remote Call Forwarding Service, InterLATA - Bus			UEPVB	UERTE	2.19	21.60	21.60					26.94	12.76		
	Unbundled Remote Call Forwarding Service, IntraLATA - Bus			UEPVB	UERTR	2.19	21.60	21.60					26.94	12.76		
	Unbundled Remote Call Forwarding Service Expanded and Exception Local Calling			UEPVB	UERVJ	2.19	21.60	21.60					26.94	12.76		
Non-Recurring																
	Unbundled Remote Call Forwarding Service - Conversion - Switch-as-is			UEPVB	USAC2		2.77	0.40					26.94	12.76		
	Unbundled Remote Call Forwarding Service - Conversion with allowed change (PIC and LPIC)			UEPVB	USACC		2.77	0.40								
UNBUNDLED LOCAL SWITCHING, PORT USAGE																
End Office Switching (Port Usage)																
	End Office Switching Function, Per MOU					0.0015										
	End Office Trunk Port - Shared, Per MOU					0.00023										
Tandem Switching (Port Usage) (Local or Access Tandem)																
	Tandem Switching Function Per MOU					0.0006										
	Tandem Trunk Port - Shared, Per MOU					0.0003										
	Tandem Switching Function Per MOU (Melded)					0.00024618										
	Tandem Trunk Port - Shared, Per MOU (Melded)					0.00012309										
	Melded Factor: 41.03% of the Tandem Rate															
Common Transport																
	Common Transport - Per Mile, Per MOU					0.00001										
	Common Transport - Facilities Termination Per MOU					0.00034										
UNBUNDLED PORT/LOOP COMBINATIONS - COST BASED RATES																
Cost Based Rates are applied where BellSouth is required by FCC and/or State Commission rule to provide Unbundled Local Switching or Switch Ports.																
Features shall apply to the Unbundled Port/Loop Combination - Cost Based Rate section in the same manner as they are applied to the Stand-Alone Unbundled Port section of this Rate Exhibit.																
End Office and Tandem Switching Usage and Common Transport Usage rates in the Port section of this rate exhibit shall apply to all combinations of loop/port network elements except for UNE Coin Port/Loop Combinations.																
The first and additional Port nonrecurring charges apply to Not Currently Combined Combos. For Currently Combined Combos the nonrecurring charges shall be those identified in the Nonrecurring - Currently Combined sections.																
2-WIRE VOICE GRADE LOOP WITH 2-WIRE LINE PORT (RES)																
UNE Port/Loop Combination Rates																
	2-Wire VG Loop/Port Combo - Zone 1		1			13.03										
	2-Wire VG Loop/Port Combo - Zone 2		2			21.33										
	2-Wire VG Loop/Port Combo - Zone 3		3			32.61										
UNE Loop Rates																
	2-Wire Voice Grade Loop (SL1) - Zone 1		1	UEPRX	UEPLX	10.75										
	2-Wire Voice Grade Loop (SL1) - Zone 2		2	UEPRX	UEPLX	19.05										
	2-Wire Voice Grade Loop (SL1) - Zone 3		3	UEPRX	UEPLX	30.33										
2-Wire Voice Grade Line Port Rates (Res)																
	2-Wire voice unbundled port - residence			UEPRX	UEPRL	2.28	79.59	63.97					40.18	9.45		
	2-Wire voice unbundled port with Caller ID - res			UEPRX	UEPRC	2.28	79.59	63.97					40.18	9.45		
	2-Wire voice unbundled port outgoing only - res			UEPRX	UEPRO	2.28	79.59	63.97					40.18	9.45		
	2-Wire voice unbundles res, low usage line port with Caller ID (LUM)			UEPRX	UEPAP	2.28	79.59	63.97					40.18	9.45		
	2-Wire voice unbundled Low Usage Line Port without Caller ID Capability			UEPRX	UEPRT	2.28	79.59	63.97					40.18	9.45		
	2-Wire Voice Grade Unbundled Port without Caller ID capability, North Carolina			UEPRX	UEPRZ	2.28	79.59	63.97								
	2-Wire Voice Grade Unbundled Port without Caller ID capability, North Carolina			UEPRX	UEPRY	2.28	79.59	63.97								
FEATURES																
	All Features Offered			UEPRX	UEPVF	3.40	0.00	0.00					40.18	9.45		
LOCAL NUMBER PORTABILITY																
	Local Number Portability (1 per port)			UEPRX	LNPCX	0.35										
NONRECURRING CHARGES (NRCs) - CURRENTLY COMBINED																
	2-Wire Voice Grade Loop / Line Port Combination - Conversion - Switch-as-is			UEPRX	USAC2		2.77	0.40					40.18	9.45		
	2-Wire Voice Grade Loop / Line Port Combination - Conversion - Switch with change			UEPRX	USACC		2.77	0.40					40.18	9.45		
	2-Wire Voice Grade Loop / Line Port Combination - Conversion - Subsequent Database Update						1.42						10.27			

UNBUNDLED NETWORK ELEMENTS - North Carolina													Attachment: 2		Exhibit: A	
CATEGORY	RATE ELEMENTS	Interim	Zone	BCS	USOC	RATES ($)					Svc Order Submitted Elec per LSR	Svc Order Submitted Manually per LSR	Incremental Charge - Manual Svc Order vs. Electronic-1st	Incremental Charge - Manual Svc Order vs. Electronic-Add'l	Incremental Charge - Manual Svc Order vs. Electronic-Disc 1st	Incremental Charge - Manual Svc Order vs. Electronic-Disc Add'l
						Rec	Nonrecurring		Nonrecurring Disconnect		OSS Rates ($)					
							First	Add'l	First	Add'l	SOMEC	SOMAN	SOMAN	SOMAN	SOMAN	SOMAN
ADDITIONAL NRCs																
	2-Wire Voice Grade Loop/Line Port Combination - Subsequent Activity			UEPRX	USAS2	0.00	0.00	0.00					40.18	9.45		
	Unbundled Miscellaneous Rate Element, Tag Loop at End User Premise			UEPRX	URETL		8.33	0.83					26.94	12.76	0.00	0.00
OFF/ON PREMISES EXTENSION CHANNELS																
	2 Wire Analog Voice Grade Extension Loop – Non-Design		1	UEPRX	UEAEN	12.11	57.99	42.37					26.94	12.76	0.00	0.00
	2 Wire Analog Voice Grade Extension Loop – Non-Design		2	UEPRX	UEAEN	21.24	57.99	42.37					26.94	12.76	0.00	0.00
	2 Wire Analog Voice Grade Extension Loop – Non-Design		3	UEPRX	UEAEN	33.65	57.99	42.37					26.94	12.76	0.00	0.00
	2 Wire Analog Voice Grade Extension Loop – Design		1	UEPRX	UEAED	14.97	142.97	106.56					26.94	12.76	0.00	0.00
	2 Wire Analog Voice Grade Extension Loop – Design		2	UEPRX	UEAED	25.93	142.97	106.56					26.94	12.76	0.00	0.00
	2 Wire Analog Voice Grade Extension Loop – Design		3	UEPRX	UEAED	40.81	142.97	106.56					26.94	12.76	0.00	0.00
INTEROFFICE TRANSPORT																
	Interoffice Transport - Dedicated - 2 Wire Voice Grade - Facility Termination			UEPRX	U1TV2	18.00	137.48	52.58					38.07	38.07		
	Interoffice Transport - Dedicated - 2 Wire Voice Grade - Per Mile or Fraction Mile			UEPRX	U1TVM	0.0125	0.00	0.00								
2-WIRE VOICE GRADE LOOP WITH 2-WIRE LINE PORT (BUS)																
UNE Port/Loop Combination Rates																
	2-Wire VG Loop/Port Combo - Zone 1		1			13.03										
	2-Wire VG Loop/Port Combo - Zone 2		2			21.33										
	2-Wire VG Loop/Port Combo - Zone 3		3			32.61										
UNE Loop Rates																
	2-Wire Voice Grade Loop (SL1) - Zone 1		1	UEPBX	UEPLX	10.75										
	2-Wire Voice Grade Loop (SL1) - Zone 2		2	UEPBX	UEPLX	19.05										
	2-Wire Voice Grade Loop (SL1) - Zone 3		3	UEPBX	UEPLX	30.33										
2-Wire Voice Grade Line Port (Bus)																
	2-Wire voice unbundled port without Caller ID - bus			UEPBX	UEPBL	2.28	79.59	63.97					40.18	9.45		
	2-Wire voice unbundled port with Caller + E484 ID - bus			UEPBX	UEPBC	2.28	79.59	63.97					40.18	9.45		
	2-Wire voice unbundled port outgoing only - bus			UEPBX	UEPBO	2.28	79.59	63.97					40.18	9.45		
	2-Wire voice unbundled incoming only port with Caller ID - Bus			UEPBX	UEPB1	2.28	79.59	63.97					40.18	9.45		
	2-Wire voice unbundled Incoming Only Port without Caller ID Capability			UEPBX	UEPBE	2.28	79.59	63.97					40.18	9.45		
LOCAL NUMBER PORTABILITY																
	Local Number Portability (1 per port)			UEPBX	LNPCX	0.35										
FEATURES																
	All Features Offered			UEPBX	UEPVF	3.40	0.00	0.00					40.18	9.45		
NONRECURRING CHARGES (NRCs) - CURRENTLY COMBINED																
	2-Wire Voice Grade Loop / Line Port Combination - Conversion - Switch-as-is			UEPBX	USAC2		2.77	0.40					40.18	9.45		
	2-Wire Voice Grade Loop / Line Port Combination - Conversion - Switch with change			UEPBX	USACC		2.77	0.40					40.18	9.45		
	2-Wire Voice Grade Loop / Line Port Combination - Conversion - Subsequent Database Update						1.42						10.27			
ADDITIONAL NRCs																
	2-Wire Voice Grade Loop/Line Port Combination - Subsequent Activity			UEPBX	USAS2		0.00	0.00					40.18	9.45		
	Unbundled Miscellaneous Rate Element, Tag Loop at End User Premise			UEPBX	URETL		8.33	0.83					26.94	12.76	0.00	0.00
OFF/ON PREMISES EXTENSION CHANNELS																
	2 Wire Analog Voice Grade Extension Loop – Non-Design		1	UEPBX	UEAEN	12.11	57.99	42.37					26.94	12.76	0.00	0.00
	2 Wire Analog Voice Grade Extension Loop – Non-Design		2	UEPBX	UEAEN	21.24	57.99	42.37					26.94	12.76	0.00	0.00
	2 Wire Analog Voice Grade Extension Loop – Non-Design		3	UEPBX	UEAEN	33.65	57.99	42.37					26.94	12.76	0.00	0.00
	2 Wire Analog Voice Grade Extension Loop – Design		1	UEPBX	UEAED	14.97	142.97	106.56					26.94	12.76	0.00	0.00
	2 Wire Analog Voice Grade Extension Loop – Design		2	UEPBX	UEAED	25.93	142.97	106.56					26.94	12.76	0.00	0.00
	2 Wire Analog Voice Grade Extension Loop – Design		3	UEPBX	UEAED	40.81	142.97	106.56					26.94	12.76	0.00	0.00
INTEROFFICE TRANSPORT																
	Interoffice Transport - Dedicated - 2 Wire Voice Grade - Facility Termination			UEPBX	U1TV2	18.00	137.48	52.58					38.07	38.07		

UNBUNDLED NETWORK ELEMENTS - North Carolina														Attachment: 2		Exhibit: A	
CATEGORY		RATE ELEMENTS	Interim	Zone	BCS	USOC	RATES ($)					Svc Order Submitted Elec per LSR	Svc Order Submitted Manually per LSR	Incremental Charge - Manual Svc Order vs. Electronic-1st	Incremental Charge - Manual Svc Order vs. Electronic-Add'l	Incremental Charge - Manual Svc Order vs. Electronic-Disc 1st	Incremental Charge - Manual Svc Order vs. Electronic-Disc Add'l
							Rec	Nonrecurring		Nonrecurring Disconnect		OSS Rates ($)					
								First	Add'l	First	Add'l	SOMEC	SOMAN	SOMAN	SOMAN	SOMAN	SOMAN
		Interoffice Transport - Dedicated - 2 Wire Voice Grade - Per Mile or Fraction Mile			UEPBX	U1TVM	0.0125	0.00	0.00								
	2-WIRE VOICE GRADE LOOP WITH 2-WIRE LINE PORT (RES - PBX)																
	UNE Port/Loop Combination Rates																
		2-Wire VG Loop/Port Combo - Zone 1		1			13.03										
		2-Wire VG Loop/Port Combo - Zone 2		2			21.33										
		2-Wire VG Loop/Port Combo - Zone 3		3			32.61										
	UNE Loop Rates																
		2-Wire Voice Grade Loop (SL 1) - Zone 1		1	UEPRG	UEPLX	10.75										
		2-Wire Voice Grade Loop (SL 1) - Zone 2		2	UEPRG	UEPLX	19.05										
		2-Wire Voice Grade Loop (SL 1) - Zone 3		3	UEPRG	UEPLX	30.33										
	2-Wire Voice Grade Line Port Rates (RES - PBX)																
		2-Wire VG Unbundled Combination 2-Way PBX Trunk Port - Res			UEPRG	UEPRD	2.28	164.57	128.16					40.18	9.45		
	LOCAL NUMBER PORTABILITY																
		Local Number Portability (1 per port)			UEPRG	LNPCP	3.15	0.00	0.00								
	FEATURES																
		All Features Offered			UEPRG	UEPVF	3.40	0.00	0.00					40.18	9.45		
	NONRECURRING CHARGES (NRCs) - CURRENTLY COMBINED																
		2-Wire Voice Grade Loop/ Line Port Combination (PBX) - Conversion - Switch-As-Is			UEPRG	USAC2		2.77	0.40					40.18	9.45		
		2-Wire Voice Grade Loop/ Line Port Combination (PBX) - Conversion - Switch with Change			UEPRG	USACC		2.77	0.40					40.18	9.45		
		2-Wire Voice Grade Loop / Line Port Combination - Conversion - Subsequent Database Update						1.42						10.27			
	ADDITIONAL NRCs																
		2-Wire Voice Grade Loop/ Line Port Combination (PBX) - Subsequent Activity			UEPRG	USAS2	0.00	0.00	0.00					40.18	9.45		
		Unbundled Miscellaneous Rate Element, Tag Loop at End User Premise			UEPRG	URETL		8.33	0.83					26.94	12.76	0.00	0.00
	OFF/ON PREMISES EXTENSION CHANNELS																
		Local Channel Voice grade, per termination		1	UEPRG	P2JHX	14.97	142.97	106.56					26.94	12.76	0.00	0.00
		Local Channel Voice grade, per termination		2	UEPRG	P2JHX	25.93	142.97	106.56					26.94	12.76	0.00	0.00
		Local Channel Voice grade, per termination		3	UEPRG	P2JHX	40.81	142.97	106.56					26.94	12.76	0.00	0.00
		Non-Wire Direct Serve Channel Voice Grade		1	UEPRG	SDD2X	14.62	252.06	109.08					26.94	12.76	0.00	0.00
		Non-Wire Direct Serve Channel Voice Grade		2	UEPRG	SDD2X	23.86	126.03	54.54					26.94	12.76	0.00	0.00
		Non-Wire Direct Serve Channel Voice Grade		3	UEPRG	SDD2X	36.40	126.03	54.54					26.94	12.76	0.00	0.00
	INTEROFFICE TRANSPORT																
		Interoffice Transport - Dedicated - 2 Wire Voice Grade - Facility Termination			UEPRG	U1TV2	18.00	137.48	52.58					38.07	38.07		
		Interoffice Transport - Dedicated - 2 Wire Voice Grade - Per Mile or Fraction Mile			UEPRG	U1TVM	0.0125	0.00	0.00								
	2-WIRE VOICE GRADE LOOP WITH 2-WIRE LINE PORT (BUS - PBX)																
	UNE Port/Loop Combination Rates																
		2-Wire VG Loop/Port Combo - Zone 1		1			13.03										
		2-Wire VG Loop/Port Combo - Zone 2		2			21.33										
		2-Wire VG Loop/Port Combo - Zone 3		3			32.61										
	UNE Loop Rates																
		2-Wire Voice Grade Loop (SL 1) - Zone 1		1	UEPPX	UEPLX	10.75										
		2-Wire Voice Grade Loop (SL 1) - Zone 2		2	UEPPX	UEPLX	19.05										
		2-Wire Voice Grade Loop (SL 1) - Zone 3		3	UEPPX	UEPLX	30.33										
	2-Wire Voice Grade Line Port Rates (BUS - PBX)																
		Line Side Unbundled Combination 2-Way PBX Trunk Port - Bus			UEPPX	UEPPC	2.28	164.57	128.16					40.18	9.45		
		Line Side Unbundled Outward PBX Trunk Port - Bus			UEPPX	UEPPO	2.28	164.57	128.16					40.18	9.45		
		Line Side Unbundled Incoming PBX Trunk Port - Bus			UEPPX	UEPP1	2.28	164.57	128.16					40.18	9.45		
		2-Wire Voice Unbundled PBX LD Terminal Ports			UEPPX	UEPLD	2.28	164.57	128.16					40.18	9.45		
		2-Wire Voice Unbundled 2-Way Combination PBX Usage Port			UEPPX	UEPXA	2.28	164.57	128.16					40.18	9.45		
		2-Wire Voice Unbundled PBX Toll Terminal Hotel Ports			UEPPX	UEPXB	2.28	164.57	128.16					40.18	9.45		

UNBUNDLED NETWORK ELEMENTS - North Carolina													Attachment: 2		Exhibit: A	
CATEGORY	RATE ELEMENTS	Interim	Zone	BCS	USOC	RATES ($)					Svc Order Submitted Elec per LSR	Svc Order Submitted Manually per LSR	Incremental Charge - Manual Svc Order vs. Electronic-1st	Incremental Charge - Manual Svc Order vs. Electronic-Add'l	Incremental Charge - Manual Svc Order vs. Electronic-Disc 1st	Incremental Charge - Manual Svc Order vs. Electronic-Disc Add'l
						Rec	Nonrecurring		Nonrecurring Disconnect		OSS Rates ($)					
							First	Add'l	First	Add'l	SOMEC	SOMAN	SOMAN	SOMAN	SOMAN	SOMAN
	2-Wire Voice Unbundled PBX LD DDD Terminals Port			UEPPX	UEPXC	2.28	164.57	128.16					40.18	9.45		
	2-Wire Voice Unbundled PBX LD Terminal Switchboard Port			UEPPX	UEPXD	2.28	164.57	128.16					40.18	9.45		
	2-Wire Voice Unbundled PBX LD Terminal Switchboard IDD Capable Port			UEPPX	UEPXE	2.28	164.57	128.16					40.18	9.45		
	2-Wire Voice Unbundled 2-Way PBX Hotel/Hospital Economy Administrative Calling Port			UEPPX	UEPXL	2.28	164.57	128.16					40.18	9.45		
	2-Wire Voice Unbundled 2-Way PBX Hotel/Hospital Economy Room Calling Port			UEPPX	UEPXM	2.28	164.57	128.16					40.18	9.45		
	2-Wire Voice Unbundled 1-Way Outgoing PBX Hotel/Hospital Discount Room Calling Port			UEPPX	UEPXO	2.28	164.57	128.16					40.18	9.45		
	2-Wire Voice Unbundled 1-Way Outgoing PBX Measured Port			UEPPX	UEPXS	2.28	164.57	128.16					40.18	9.45		
LOCAL NUMBER PORTABILITY																
	Local Number Portability (1 per port)			UEPPX	LNPCP	3.15	0.00	0.00					40.18	9.45		
FEATURES																
	All Features Offered			UEPPX	UEPVF	3.40	0.00	0.00					40.18	9.45		
NONRECURRING CHARGES (NRCs) - CURRENTLY COMBINED																
	2-Wire Voice Grade Loop/ Line Port Combination (PBX) - Conversion - Switch-As-Is			UEPPX	USAC2		2.77	0.40					40.18	9.45		
	2-Wire Voice Grade Loop/ Line Port Combination (PBX) - Conversion - Switch with Change			UEPPX	USACC		2.77	0.40					40.18	9.45		
	2-Wire Voice Grade Loop / Line Port Combination - Conversion - Subsequent Database Update						1.42						10.27			
ADDITIONAL NRCs																
	2-Wire Voice Grade Loop/ Line Port Combination (PBX) - Subsequent Activity			UEPPX	USAS2	0.00	0.00	0.00					40.18	9.45		
	Unbundled Miscellaneous Rate Element, Tag Loop at End User Premise			UEPPX	URETL		8.33	0.83					26.94	12.76	0.00	0.00
OFF/ON PREMISES EXTENSION CHANNELS																
	Local Channel Voice grade, per termination		1	UEPPX	P2JHX	14.97	142.97	106.56					26.94	12.76	0.00	0.00
	Local Channel Voice grade, per termination		2	UEPPX	P2JHX	25.93	142.97	106.56					26.94	12.76	0.00	0.00
	Local Channel Voice grade, per termination		3	UEPPX	P2JHX	40.81	142.97	106.56					26.94	12.76	0.00	0.00
	Non-Wire Direct Serve Channel Voice Grade		1	UEPPX	SDD2X	14.62	252.06	109.08					26.94	12.76	0.00	0.00
	Non-Wire Direct Serve Channel Voice Grade		2	UEPPX	SDD2X	23.86	126.03	54.54					26.94	12.76	0.00	0.00
	Non-Wire Direct Serve Channel Voice Grade		3	UEPPX	SDD2X	36.40	126.03	54.54					26.94	12.76	0.00	0.00
INTEROFFICE TRANSPORT																
	Interoffice Transport - Dedicated - 2 Wire Voice Grade - Facility Termination			UEPPX	U1TV2	18.00	137.48	52.58					38.07	38.07		
	Interoffice Transport - Dedicated - 2 Wire Voice Grade - Per Mile or Fraction Mile			UEPPX	U1TVM	0.0125	0.00	0.00								
2-WIRE VOICE GRADE LOOP WITH 2-WIRE ANALOG LINE COIN PORT																
UNE Port/Loop Combination Rates																
	2-Wire VG Coin Port/Loop Combo – Zone 1		1			13.03										
	2-Wire VG Coin Port/Loop Combo – Zone 2		2			21.33										
	2-Wire VG Coin Port/Loop Combo – Zone 3		3			32.61										
UNE Loop Rates																
	2-Wire Voice Grade Loop (SL1) - Zone 1		1	UEPCO	UEPLX	10.75										
	2-Wire Voice Grade Loop (SL1) - Zone 2		2	UEPCO	UEPLX	19.05										
	2-Wire Voice Grade Loop (SL1) - Zone 3		3	UEPCO	UEPLX	30.33										
2-Wire Voice Grade Line Ports (COIN)																
	2-Wire Coin 2-Way without Operator Screening and without Blocking (NC)			UEPCO	UEPND	2.28	79.59	63.97					40.18	9.45		
	2-Wire Coin 2-Way with Operator Screening (NC)			UEPCO	UEPNC	2.28	79.59	63.97					40.18	9.45		
	2-Wire Coin 2-Way with Operator Screening and Blocking: 011, 900/976, 1+DDD (NC, TN)			UEPCO	UEPRP	2.28	79.59	63.97					40.18	9.45		
	2-Wire Coin 2-Way with Operator Screening and 011 Blocking (NC)			UEPCO	UEPNB	2.28	79.59	63.97					40.18	9.45		
	2-Wire Coin 2-Way with Operator Screening: 900 Blocking: 900/976, 1+DDD, 011+, and Local (NC, TN)			UEPCO	UEPCA	2.28	79.59	63.97					40.18	9.45		

UNBUNDLED NETWORK ELEMENTS - North Carolina													Attachment: 2		Exhibit: A	
CATEGORY	RATE ELEMENTS	Interim	Zone	BCS	USOC	RATES ($)					Svc Order Submitted Elec per LSR	Svc Order Submitted Manually per LSR	Incremental Charge - Manual Svc Order vs. Electronic-1st	Incremental Charge - Manual Svc Order vs. Electronic-Add'l	Incremental Charge - Manual Svc Order vs. Electronic-Disc 1st	Incremental Charge - Manual Svc Order vs. Electronic-Disc Add'l
						Rec	Nonrecurring		Nonrecurring Disconnect		OSS Rates ($)					
							First	Add'l	First	Add'l	SOMEC	SOMAN	SOMAN	SOMAN	SOMAN	SOMAN
	2-Wire Coin Outward with Operator Screening and 011 Blocking (NC)			UEPCO	UEPNE	2.28	79.59	63.97					40.18	9.45		
	2-Wire Coin Outward with Operator Screening and Blocking: 900/976, 1+DDD, 011+, and Local (NC)			UEPCO	UEPCL	2.28	79.59	63.97					40.18	9.45		
	2-Wire 2-Way Smartline with 900/976 (all states except LA)			UEPCO	UEPCK	2.28	79.59	63.97					40.18	9.45		
	2-Wire Coin Outward Smartline with 900/976 (all states except LA)			UEPCO	UEPCR	2.28	79.59	63.97					40.18	9.45		
ADDITIONAL UNE COIN PORT/LOOP (RC)																
	UNE Coin Port/Loop Combo Usage (Flat Rate)			UEPCO	URECU	3.70	0.00	0.00	0.00	0.00			40.18	9.45		
LOCAL NUMBER PORTABILITY																
	Local Number Portability (1 per port)			UEPCO	LNPCX	0.35										
NONRECURRING CHARGES - CURRENTLY COMBINED																
	2-Wire Voice Grade Loop / Line Port Combination - Conversion - Switch-as-is			UEPCO	USAC2		2.77	0.40					40.18	9.45		
	2-Wire Voice Grade Loop / Line Port Combination - Conversion - Switch with change			UEPCO	USACC		2.77	0.40					40.18	9.45		
	2-Wire Voice Grade Loop / Line Port Combination - Conversion - Subsequent Database Update						1.42									
ADDITIONAL NRCs																
	2-Wire Voice Grade Loop/Line Port Combination - Subsequent Activity			UEPCO	USAS2		0.00	0.00					40.18	9.45		
	Unbundled Miscellaneous Rate Element, Tag Loop at End User Premise			UEPCO	URETL		8.33	0.83					26.94	12.76	0.00	0.00
2-WIRE VOICE LOOP/ 2WIRE VOICE GRADE IO TRANSPORT/ 2-WIRE LINE PORT (RES)																
UNE Port/Loop Combination Rates																
	2-Wire VG Loop/IO Tranport/Port Combo - Zone 1		1			17.16										
	2-Wire VG Loop/IO Tranport/Port Combo - Zone 2		2			28.12										
	2-Wire VG Loop/IO Tranport/Port Combo - Zone 3		3			43.00										
UNE Loop Rates																
	2-Wire Voice Grade Loop (SL2) - Zone 1		1	UEPFR	UECF2	14.97										
	2-Wire Voice Grade Loop (SL2) - Zone 2		2	UEPFR	UECF2	25.93										
	2-Wire Voice Grade Loop (SL2) - Zone 3		3	UEPFR	UECF2	40.81										
2-Wire Voice Grade Line Port Rates (Res)																
	2-Wire voice unbundled port - residence			UEPFR	UEPRL	2.19	225.00	225.00					40.18	9.45		
	2-Wire voice unbundled port with Caller ID - res			UEPFR	UEPRC	2.19	225.00	225.00					40.18	9.45		
	2-Wire voice unbundled port outgoing only - res			UEPFR	UEPRO	2.19	225.00	225.00					40.18	9.45		
	2-Wire voice unbundles res, low usage line port with Caller ID (LUM)			UEPFR	UEPAP	2.19	225.00	225.00					40.18	9.45		
INTEROFFICE TRANSPORT																
	Interoffice Transport - Dedicated - 2 Wire Voice Grade - Facility Termination			UEPFR	U1TV2	18.00	140.00	71.00								
	Interoffice Transport - Dedicated - 2 Wire Voice Grade - Per Mile or Fraction Mile			UEPFR	1L5XX	0.0125										
FEATURES																
	All Features Offered			UEPFR	UEPVF	3.40	0.00	0.00					40.18	9.45		
LOCAL NUMBER PORTABILITY																
	Local Number Portability (1 per port)			UEPFR	LNPCX	0.35										
NONRECURRING CHARGES (NRCs) - CURRENTLY COMBINED																
	2-Wire Loop / Dedicated IO Transport / 2 Wire Line Port Combination - Conversion - Switch-as-is			UEPFR	USAC2		9.03	1.87					40.18	9.45		
	2-Wire Loop / Dedicated IO Transport / 2 Wire Line Port Combination - Conversion - Switch-With-Change			UEPFR	USACC		9.03	1.87					40.18	9.45		
	Unbundled Miscellaneous Rate Element, Tag Designed Loop at End User Premise			UEPFR	URETN		11.20	1.10					26.94	12.76	0.00	0.00
2-WIRE VOICE LOOP/ 2WIRE VOICE GRADE IO TRANSPORT/ 2-WIRE LINE PORT (BUS)																
UNE Port/Loop Combination Rates																
	2-Wire VG Loop/IO Tranport/Port Combo - Zone 1		1			17.16										
	2-Wire VG Loop/IO Tranport/Port Combo - Zone 2		2			28.12										
	2-Wire VG Loop/IO Tranport/Port Combo - Zone 3		3			43.00										

UNBUNDLED NETWORK ELEMENTS - North Carolina														Attachment: 2		Exhibit: A	
CATEGORY		RATE ELEMENTS	Interim	Zone	BCS	USOC	RATES ($)					Svc Order Submitted Elec per LSR	Svc Order Submitted Manually per LSR	Incremental Charge - Manual Svc Order vs. Electronic-1st	Incremental Charge - Manual Svc Order vs. Electronic-Add'l	Incremental Charge - Manual Svc Order vs. Electronic-Disc 1st	Incremental Charge - Manual Svc Order vs. Electronic-Disc Add'l
							Rec	Nonrecurring		Nonrecurring Disconnect		OSS Rates ($)					
								First	Add'l	First	Add'l	SOMEC	SOMAN	SOMAN	SOMAN	SOMAN	SOMAN
	UNE Loop Rates																
		2-Wire Voice Grade Loop (SL2) - Zone 1		1	UEPFB	UECF2	14.97										
		2-Wire Voice Grade Loop (SL2) - Zone 2		2	UEPFB	UECF2	25.93										
		2-Wire Voice Grade Loop (SL2) - Zone 3		3	UEPFB	UECF2	40.81										
	2-Wire Voice Grade Line Port (Bus)																
		2-Wire voice unbundled port without Caller ID - bus			UEPFB	UEPBL	2.19	225.00	225.00					40.18	9.45		
		2-Wire voice unbundled port with Caller + E484 ID - bus			UEPFB	UEPBC	2.19	225.00	225.00					40.18	9.45		
		2-Wire voice unbundled port outgoing only - bus			UEPFB	UEPBO	2.19	225.00	225.00					40.18	9.45		
		2-Wire voice unbundled incoming only port with Caller ID - Bus			UEPFB	UEPB1	2.19	225.00	225.00					40.18	9.45		
	LOCAL NUMBER PORTABILITY																
		Local Number Portability (1 per port)			UEPFB	LNPCX	0.35										
	INTEROFFICE TRANSPORT																
		Interoffice Transport - Dedicated - 2 Wire Voice Grade - Facility Termination			UEPFB	U1TV2	18.00	140.00	71.00								
		Interoffice Transport - Dedicated - 2 Wire Voice Grade - Per Mile or Fraction Mile			UEPFB	1L5XX	0.0125										
	FEATURES																
		All Features Offered			UEPFB	UEPVF	3.40	0.00	0.00					40.18	9.45		
	NONRECURRING CHARGES (NRCs) - CURRENTLY COMBINED																
		2-Wire Loop / Dedicated IO Transport / 2 Wire Line Port Combination - Conversion - Switch-as-is			UEPFB	USAC2		9.03	1.87					40.18	9.45		
		2-Wire Loop / Dedicated IO Transport / 2 Wire Line Port Combination - Conversion - Switch with change			UEPFB	USACC		9.03	1.87					40.18	9.45		
		Unbundled Miscellaneous Rate Element, Tag Designed Loop at End User Premise			UEPFB	URETN		11.20	1.10					26.94	12.76	0.00	0.00
	2-WIRE VOICE LOOP/ 2WIRE VOICE GRADE IO TRANSPORT/ 2-WIRE LINE PORT (PBX)																
	UNE Port/Loop Combination Rates																
		2-Wire VG Loop/IO Tranport/Port Combo - Zone 1		1			17.16										
		2-Wire VG Loop/IO Tranport/Port Combo - Zone 2		2			28.12										
		2-Wire VG Loop/IO Tranport/Port Combo - Zone 3		3			43.00										
	UNE Loop Rates																
		2-Wire Voice Grade Loop (SL2) - Zone 1		1	UEPFP	UECF2	14.97										
		2-Wire Voice Grade Loop (SL2) - Zone 2		2	UEPFP	UECF2	25.93										
		2-Wire Voice Grade Loop (SL2) - Zone 3		3	UEPFP	UECF2	40.81										
	2-Wire Voice Grade Line Port Rates (BUS - PBX)																
		Line Side Unbundled Combination 2-Way PBX Trunk Port - Bus			UEPFP	UEPPC	2.18	225.00	225.00					40.18	9.45		
		Line Side Unbundled Outward PBX Trunk Port - Bus			UEPFP	UEPPO	2.18	225.00	225.00					40.18	9.45		
		Line Side Unbundled Incoming PBX Trunk Port - Bus			UEPFP	UEPP1	2.18	225.00	225.00					40.18	9.45		
		2-Wire Voice Unbundled PBX LD Terminal Ports			UEPFP	UEPLD	2.18	225.00	225.00					40.18	9.45		
		2-Wire Voice Unbundled 2-Way Combination PBX Usage Port			UEPFP	UEPXA	2.18	225.00	225.00					40.18	9.45		
		2-Wire Voice Unbundled PBX Toll Terminal Hotel Ports			UEPFP	UEPXB	2.18	225.00	225.00					40.18	9.45		
		2-Wire Voice Unbundled PBX LD DDD Terminals Port			UEPFP	UEPXC	2.18	225.00	225.00					40.18	9.45		
		2-Wire Voice Unbundled PBX LD Terminal Switchboard Port			UEPFP	UEPXD	2.18	225.00	225.00					40.18	9.45		
		2-Wire Voice Unbundled PBX LD Terminal Switchboard IDD Capable Port			UEPFP	UEPXE	2.18	225.00	225.00					40.18	9.45		
		2-Wire Voice Unbundled 2-Way PBX Hotel/Hospital Economy Administrative Calling Port			UEPFP	UEPXL	2.18	225.00	225.00					40.18	9.45		
		2-Wire Voice Unbundled 2-Way PBX Hotel/Hospital Economy Room Calling Port			UEPFP	UEPXM	2.18	225.00	225.00					40.18	9.45		
		2-Wire Voice Unbundled 1-Way Outgoing PBX Hotel/Hospital Discount Room Calling Port			UEPFP	UEPXO	2.18	225.00	225.00					40.18	9.45		
		2-Wire Voice Unbundled 1-Way Outgoing PBX Measured Port			UEPFP	UEPXS	2.18	225.00	225.00					40.18	9.45		
	LOCAL NUMBER PORTABILITY																
		Local Number Portability (1 per port)			UEPFP	LNPCP	3.15	0.00	0.00					40.18	9.45		
	INTEROFFICE TRANSPORT																
		Interoffice Transport - Dedicated - 2 Wire Voice Grade - Facility Termination			UEPFP	U1TV2	18.00	140.00	71.00								

UNBUNDLED NETWORK ELEMENTS - North Carolina													Attachment: 2		Exhibit: A	
CATEGORY	RATE ELEMENTS	Interim	Zone	BCS	USOC	RATES ($)					Svc Order Submitted Elec per LSR	Svc Order Submitted Manually per LSR	Incremental Charge - Manual Svc Order vs. Electronic-1st	Incremental Charge - Manual Svc Order vs. Electronic-Add'l	Incremental Charge - Manual Svc Order vs. Electronic-Disc 1st	Incremental Charge - Manual Svc Order vs. Electronic-Disc Add'l
						Rec	Nonrecurring		Nonrecurring Disconnect		OSS Rates ($)					
							First	Add'l	First	Add'l	SOMEC	SOMAN	SOMAN	SOMAN	SOMAN	SOMAN
	Interoffice Transport - Dedicated - 2 Wire Voice Grade - Per Mile or Fraction Mile			UEPFP	1L5XX	0.0125										
FEATURES																
	All Features Offered			UEPFP	UEPVF	3.40	0.00	0.00					40.18	9.45		
NONRECURRING CHARGES (NRCs) - CURRENTLY COMBINED																
	2-Wire Loop / Dedicated IO Transport / 2 Wire Line Port Combination - Conversion - Switch-as-is			UEPFP	USAC2		9.03	1.87					40.18	9.45		
	2-Wire Loop / Dedicated IO Transport / 2 Wire Line Port Combination - Conversion - Switch with change			UEPFP	USACC		9.03	1.87					40.18	9.45		
	Unbundled Miscellaneous Rate Element, Tag Designed Loop at End User Premise			UEPFP	URETN		11.20	1.10					26.94	12.76	0.00	0.00
UNBUNDLED PORT/LOOP COMBINATIONS - COST BASED RATES																
2-WIRE VOICE GRADE LOOP- BUS ONLY - WITH 2-WIRE DID TRUNK PORT																
UNE Port/Loop Combination Rates																
	2-Wire VG Loop/2-Wire DID Trunk Port Combo - UNE Zone 1		1			20.97										
	2-Wire VG Loop/2-Wire DID Trunk Port Combo - UNE Zone 2		2			27.80										
	2-Wire VG Loop/2-Wire DID Trunk Port Combo - UNE Zone 3		3			37.08										
UNE Loop Rates																
	2-Wire Analog Voice Grade Loop - (SL2) - UNE Zone 1		1	UEPPX	UECD1	8.85										
	2-Wire Analog Voice Grade Loop - (SL2) - UNE Zone 2		2	UEPPX	UECD1	15.68										
	2-Wire Analog Voice Grade Loop - (SL2) - UNE Zone 3		3	UEPPX	UECD1	24.96										
UNE Port Rate																
	Exchange Ports - 2-Wire DID Port			UEPPX	UEPD1	12.12	224.81	188.40					40.18	9.45		
NONRECURRING CHARGES - CURRENTLY COMBINED																
	2-Wire Voice Grade Loop / 2-Wire DID Trunk Port Combination - Switch-as-is			UEPPX	USAC1		13.26	8.39					53.89	11.34		
	2-Wire Voice Grade Loop / 2-Wire DID Trunk Port Conversion with BellSouth Allowable Changes			UEPPX	USA1C		13.26	8.39					53.89	11.34		
ADDITIONAL NRCs																
	2-Wire DID Subsequent Activity - Add Trunks, Per Trunk			UEPPX	USAS1		53.49						40.18	9.45		
	Unbundled Miscellaneous Rate Element, Tag Designed Loop at End User Premise			UEPPX	URETN		11.20	1.10					26.94	12.76	0.00	0.00
Telephone Number/Trunk Group Establisment Charges																
	DID Trunk Termination (One Per Port)			UEPPX	NDT	0.00	0.00	0.00								
	DID Numbers, Establish Trunk Group and Provide First Group of 20 DID Numbers			UEPPX	NDZ	0.00	0.00	0.00								
	Additional DID Numbers for each Group of 20 DID Numbers			UEPPX	ND4	0.00	0.00	0.00								
	DID Numbers, Non- consecutive DID Numbers , Per Number			UEPPX	ND5	0.00	0.00	0.00								
	Reserve Non-Consecutive DID numbers			UEPPX	ND6	0.00	0.00	0.00								
	Reserve DID Numbers			UEPPX	NDV	0.00	0.00	0.00								
LOCAL NUMBER PORTABILITY																
	Local Number Portability (1 per port)			UEPPX	LNPCP	3.15	0.00	0.00								
2-WIRE ISDN DIGITAL GRADE LOOP WITH 2-WIRE ISDN DIGITAL LINE SIDE PORT																
UNE Port/Loop Combination Rates																
	2W ISDN Digital Grade Loop/2W ISDN Digital Line Side Port - UNE Zone 1		1	UEPPB UEPPR		38.84										
	2W ISDN Digital Grade Loop/2W ISDN Digital Line Side Port - UNE Zone 2		2	UEPPB UEPPR		50.01										
	2W ISDN Digital Grade Loop/2W ISDN Digital Line Side Port - UNE Zone 3		3	UEPPB UEPPR		65.18										
UNE Loop Rates																
	2-Wire ISDN Digital Grade Loop - UNE Zone 1		1	UEPPB UEPPR	USL2X	14.47										
	2-Wire ISDN Digital Grade Loop - UNE Zone 2		2	UEPPB UEPPR	USL2X	25.64										
	2-Wire ISDN Digital Grade Loop - UNE Zone 3		3	UEPPB UEPPR	USL2X	40.81										
UNE Port Rate																
	Exchange Port - 2-Wire ISDN Line Side Port			UEPPB UEPPR	UEPPB	24.37	388.20	302.77					19.99	19.99		
NONRECURRING CHARGES - CURRENTLY COMBINED																

UNBUNDLED NETWORK ELEMENTS - North Carolina													Attachment: 2		Exhibit: A	
CATEGORY	RATE ELEMENTS	Interim	Zone	BCS	USOC	RATES ($)					Svc Order Submitted Elec per LSR	Svc Order Submitted Manually per LSR	Incremental Charge - Manual Svc Order vs. Electronic-1st	Incremental Charge - Manual Svc Order vs. Electronic-Add'l	Incremental Charge - Manual Svc Order vs. Electronic-Disc 1st	Incremental Charge - Manual Svc Order vs. Electronic-Disc Add'l
						Rec	Nonrecurring		Nonrecurring Disconnect		OSS Rates ($)					
							First	Add'l	First	Add'l	SOMEC	SOMAN	SOMAN	SOMAN	SOMAN	SOMAN
	2-Wire ISDN Digital Grade Loop / 2-Wire ISDN Line Side Port Combination - Conversion			UEPPB UEPPR	USACB	0.00	174.35	174.35								
	ADDITIONAL NRCs															
	Unbundled Miscellaneous Rate Element, Tag Designed Loop at End User Premise			UEPPB UEPPR	URETN		11.20	1.10								
	Unbundled Miscellaneous Rate Element, Tag Loop at End User Premise			UEPPB UEPPR	URETL		8.33	0.83					26.94	12.76	0.00	0.00
	LOCAL NUMBER PORTABILITY															
	Local Number Portability (1 per port)			UEPPB UEPPR	LNPCX	0.35	0.00	0.00								
	B-CHANNEL USER PROFILE ACCESS:															
	CVS/CSD (DMS/5ESS)			UEPPB UEPPR	U1UCA	0.00	0.00	0.00								
	CVS (EWSD)			UEPPB UEPPR	U1UCB	0.00	0.00	0.00								
	CSD			UEPPB UEPPR	U1UCC	0.00	0.00	0.00								
	B-CHANNEL AREA PLUS USER PROFILE ACCESS: (AL,KY,LA,MS SC,MS, & TN)															
	USER TERMINAL PROFILE															
	User Terminal Profile (EWSD only)			UEPPB UEPPR	U1UMA	0.00	0.00	0.00								
	VERTICAL FEATURES															
	All Vertical Features - One per Channel B User Profile			UEPPB UEPPR	UEPVF	3.40	0.00	0.00								
	INTEROFFICE CHANNEL MILEAGE															
	Interoffice Channel mileage each, including first mile and facilities termination			UEPPB UEPPR	M1GNC	18.0282	137.48	52.58					19.99	19.99		
	Interoffice Channel mileage each, additional mile			UEPPB UEPPR	M1GNM	0.0282	0.00	0.00								
	4-WIRE DS1 DIGITAL LOOP WITH 4-WIRE ISDN DS1 DIGITAL TRUNK PORT															
	The UNE-P DS1 combination rates below for in this rate exhibit apply to the embedded base in place as of 10/2/03 until 4/1/04. After 4/1/04 these rates shall revert to tariff rates or a separate commercial agreement.															
	Requests for 4-Wire DS1 Digital Loop with 4-Wire ISDN DS1 Digital Trunk Port after the effective date of this amendment shall be provided pursuant to a separate agreement or tariff at BellSouth's discretion.															
	UNE Port/Loop Combination Rates															
	4W DS1 Digital Loop/4W ISDN DS1 Digital Trunk Port - UNE Zone 1		1	UEPPP		226.55										
	4W DS1 Digital Loop/4W ISDN DS1 Digital Trunk Port - UNE Zone 2		2	UEPPP		263.28										
	4W DS1 Digital Loop/4W ISDN DS1 Digital Trunk Port - UNE Zone 3		3	UEPPP		313.15										
	UNE Loop Rates															
	4-Wire DS1 Digital Loop - UNE Zone 1		1	UEPPP	USL4P	47.54										
	4-Wire DS1 Digital Loop - UNE Zone 2		2	UEPPP	USL4P	84.27										
	4-Wire DS1 Digital Loop - UNE Zone 3		3	UEPPP	USL4P	134.14										
	UNE Port Rate															
	Exchange Ports - 4-Wire ISDN DS1 Port (E:4/1/2004)			UEPPP	UEPPP	179.01	956.47	663.10					19.99	19.99		
	NONRECURRING CHARGES - CURRENTLY COMBINED															
	4-Wire DS1 Digital Loop / 4-Wire ISDN DS1 Digital Trunk Port Combination - Conversion -Switch-as-is (E:4/1/2004)			UEPPP	USACP	0.00	481.51	481.51								
	ADDITIONAL NRCs															
	4-Wire DS1 Loop / 4-Wire ISDN DS1 Digital Trunk Port - Subsequent Inward/2-Way Tel Nos - (NC Only)			UEPPP	PR7TG		1.17	1.17								
	4-Wire DS1 Loop/4-Wire ISDN Digital Trunk Port - Subsequent Activity Outward tel nos. (NC only)			UEPPP	PR7TP		28.17	28.17								
	4-Wire DS1 Loop / 4-Wire ISDN DS1 Digital Trk Port - Subsequent Inward Tel Numbers			UEPPP	PR7ZT		56.33	56.33								
	LOCAL NUMBER PORTABILITY															
	Local Number Portability (1 per port)			UEPPP	LNPCN	1.75										
	INTERFACE (Provsioning Only)															
	Voice/Data			UEPPP	PR71V	0.00	0.00	0.00								
	Digital Data			UEPPP	PR71D	0.00	0.00	0.00								
	Inward Data			UEPPP	PR71E	0.00	0.00	0.00								
	New or Additional "B" Channel															
	New or Additional - Voice/Data B Channel			UEPPP	PR7BV	0.00	36.92						19.99	19.99		
	New or Additional - Digital Data B Channel			UEPPP	PR7BF	0.00	36.92						19.99	19.99		
	New or Additional Inward Data B Channel			UEPPP	PR7BD	0.00	36.92						19.99	19.99		
	CALL TYPES															

CATEGORY	RATE ELEMENTS	Interim	Zone	BCS	USOC	RATES ($) Rec	Nonrecurring First	Nonrecurring Add'l	Nonrecurring Disconnect First	Nonrecurring Disconnect Add'l	Svc Order Submitted Elec per LSR	Svc Order Submitted Manually per LSR	Attachment: 2 Incremental Charge - Manual Svc Order vs. Electronic- 1st	Attachment: 2 Incremental Charge - Manual Svc Order vs. Electronic- Add'l	Exhibit: A Incremental Charge - Manual Svc Order vs. Electronic- Disc 1st	Exhibit: A Incremental Charge - Manual Svc Order vs. Electronic- Disc Add'l
							OSS Rates ($)									
											SOMEC	SOMAN	SOMAN	SOMAN	SOMAN	SOMAN
	Inward			UEPPP	PR7C1	0.00	0.00	0.00								
	Outward			UEPPP	PR7CO	0.00	0.00	0.00								
	Two-way			UEPPP	PR7CC	0.00	0.00	0.00								
	Interoffice Channel Mileage															
	Fixed Each Including First Mile			UEPPP	1LN1A	71.8653	217.17	163.75	0.00				19.99	19.99		
	Each Airline-Fractional Additional Mile			UEPPP	1LN1B	0.5753										
	4-WIRE DS1 DIGITAL LOOP WITH 4-WIRE DDITS TRUNK PORT															
	The UNE-P DS1 combination rates below for in this rate exhibit apply to the embedded base in place as of 10/2/03 until 4/1/04. After 4/1/04 these rates shall revert to tariff rates or a separate commercial agreement.															
	Requests for 4-Wire DS1 Digital Loop with 4-Wire DDITS after the effective date of this amendment shall be provided pursuant to a separate agreement or tariff at BellSouth's discretion.															
	UNE Port/Loop Combination Rates															
	4W DS1 Digital Loop/4W DDITS Trunk Port - UNE Zone 1		1	UEPDC		171.06										
	4W DS1 Digital Loop/4W DDITS Trunk Port - UNE Zone 2		2	UEPDC		207.79										
	4W DS1 Digital Loop/4W DDITS Trunk Port - UNE Zone 3		3	UEPDC		257.66										
	UNE Loop Rates															
	4-Wire DS1 Digital Loop - UNE Zone 1		1	UEPDC	USLDC	47.54										
	4-Wire DS1 Digital Loop - UNE Zone 2		2	UEPDC	USLDC	84.27										
	4-Wire DS1 Digital Loop - UNE Zone 3		3	UEPDC	USLDC	134.14										
	UNE Port Rate															
	4-Wire DDITS Digital Trunk Port (E:4/1/2004)			UEPDC	UDD1T	123.52	831.43	491.39					19.99	19.99		
	NONRECURRING CHARGES - CURRENTLY COMBINED															
	4-Wire DS1 Digital Loop / 4-Wire DDITS Trunk Port Combination - Switch-as-is (E:4/1/2004)			UEPDC	USAC4		490.38	490.38								
	4-Wire DS1 Digital Loop / 4-Wire DDITS Trunk Port Combination - Conversion with DS1 Changes (E:4/1/2004)			UEPDC	USAWA		490.38	490.38								
	4-Wire DS1 Digital Loop / 4-Wire DDITS Trunk Port Combination - Conversion with Change - Trunk (E:4/1/2004)			UEPDC	USAWB		490.38	490.38								
	ADDITIONAL NRCs															
	4-Wire DS1 Loop / 4-Wire DDITS Trunk Port - Subsequent Service Activity Per Service Order			UEPDC	USAS4		127.63	127.63								
	4-Wire DS1 Loop / 4-Wire DDITS Trunk Port - NRC - Subsequent Channel Activation/Chan - 2-Way Trunk			UEPDC	UDTTA		28.81	28.81								
	4-Wire DS1 Loop / 4-Wire DDITS Trunk Port - Subsequent Channel Activation/Chan - 1-Way Outward Trunk			UEPDC	UDTTB		28.81	28.81								
	4-Wire DS1 Loop / 4-Wire DDITS Trunk Port - Subsqnt Channel Activation/Chan Inward Trunk w/out DID			UEPDC	UDTTC		28.81	28.81					19.99	19.99		
	4-Wire DS1 Loop / 4-Wire DDITS Trunk Port - Subsqnt Chan Activation Per Chan - Inward Trunk with DID			UEPDC	UDTTD		28.81	28.81					19.99	19.99		
	4-Wire DS1 Loop / 4-Wire DDITS Trunk Port - Subsqnt Chan Activation / Chan - 2-Way DID w User Trans			UEPDC	UDTTE		28.81	28.81								
	BIPOLAR 8 ZERO SUBSTITUTION															
	B8ZS -Superframe Format			UEPDC	CCOSF		0.00i	615.00s								
	B8ZS - Extended Superframe Format			UEPDC	CCOEF		0.00i	615.00s								
	Alternate Mark Inversion															
	AMI -Superframe Format			UEPDC	MCOSF		0.00	0.00								
	AMI - Extended SuperFrame Format			UEPDC	MCOPO		0.00	0.00								
	Telephone Number/Trunk Group Establisment Charges															
	Telephone Number for 2-Way Trunk Group			UEPDC	UDTGX	0.00							19.99	19.99		
	Telephone Number for 1-Way Outward Trunk Group			UEPDC	UDTGY	0.00							19.99	19.99		
	Telephone Number for 1-Way Inward Trunk Group Without DID			UEPDC	UDTGZ	0.00							19.99	19.99		
	DID Numbers, Establish Trunk Group and Provide First Group of 20 DID Numbers			UEPDC	NDZ	0.00	0.00	0.00								
	DID Numbers for each Group of 20 DID Numbers			UEPDC	ND4	0.00										
	DID Numbers, Non- consecutive DID Numbers , Per Number			UEPDC	ND5	0.00										
	Reserve Non-Consecutive DID Nos.			UEPDC	ND6	0.00	0.00	0.00								
	Reserve DID Numbers			UEPDC	NDV	0.00	0.00	0.00								
	Dedicated DS1 (Interoffice Channel Mileage) - FX/FCO for 4-Wire DS1 Digital Loop with 4-Wire DDITS Trunk Port															
	Interoffice Channel Mileage - Fixed rate 0-8 miles (Facilities Termination)			UEPDC	1LNO1	71.29	217.17	163.75	0.00	0.00			19.99	19.99		

CATEGORY	RATE ELEMENTS	Interim	Zone	BCS	USOC	RATES ($) Rec	Nonrecurring First	Nonrecurring Add'l	Nonrecurring Disconnect First	Nonrecurring Disconnect Add'l	Svc Order Submitted Elec per LSR	Svc Order Submitted Manually per LSR	Attachment: 2 Incremental Charge - Manual Svc Order vs. Electronic-1st	Attachment: 2 Incremental Charge - Manual Svc Order vs. Electronic-Add'l	Exhibit: A Incremental Charge - Manual Svc Order vs. Electronic-Disc 1st	Exhibit: A Incremental Charge - Manual Svc Order vs. Electronic-Disc Add'l
											OSS Rates ($)					
											SOMEC	SOMAN	SOMAN	SOMAN	SOMAN	SOMAN
	Interoffice Channel Mileage - Additional rate per mile - 0-8 miles			UEPDC	1LNOA	0.5753	0.00	0.00								
	Interoffice Channel Mileage - Fixed rate 9-25 miles (Facilities Termination)			UEPDC	1LNO2	0.00	0.00	0.00								
	Interoffice Channel Mileage - Additional rate per mile - 9-25 miles			UEPDC	1LNOB	0.5753	0.00	0.00								
	Interoffice Channel Mileage - Fixed rate 25+ miles (Facilities Termination)			UEPDC	1LNO3	0.00	0.00	0.00	0.00							
	Interoffice Channel Mileage - Additional rate per mile - 25+ miles			UEPDC	1LNOC	0.5753	0.00	0.00								
	Local Number Portability, per DS0 Activated			UEPDC	LNPCP	3.15	0.00	0.00	0.00							
	Central Office Termininating Point			UEPDC	CTG	0.00										
	4-WIRE DS1 LOOP WITH CHANNELIZATION WITH PORT															
	System is 1 DS1 Loop, 1 D4 Channel Bank, and up to 24 Feature Activations															
	Each System can have up to 24 combinations of rates depending on type and number of ports used															
	The UNE-P DS1 combination rates below for 4-Wire DS1 Loop with Channelization with Port in this rate exhibit apply to the embedded base in place as of 10/2/03 until 4/1/04. After 4/1/04 these rates shall revert to tariff rates or a separate agreement.															
	Requests for 4-Wire DS1 Loop with Channelization with Port after the effective date of this amendment shall be provided pursuant to a separate agreement or tariff at BellSouth's discretion.															
	UNE DS1 Loop															
	4-Wire DS1 Loop - UNE Zone 1		1	UEPMG	USLDC	47.54	0.00	0.00								
	4-Wire DS1 Loop - UNE Zone 2		2	UEPMG	USLDC	84.27	0.00	0.00								
	4-Wire DS1 Loop - UNE Zone 3		3	UEPMG	USLDC	134.14	0.00	0.00								
	UNE DSO Channelization Capacities (D4 Channel Bank Configurations)															
	24 DSO Channel Capacity - 1 per DS1			UEPMG	VUM24	123.06	0.00	0.00					19.99	19.99		
	48 DSO Channel Capacity - 1 per 2 DS1s			UEPMG	VUM48	246.12	0.00	0.00					19.99	19.99		
	96 DSO Channel Capacity -1per 4 DS1s			UEPMG	VUM96	492.24	0.00	0.00					19.99	19.99		
	144 DS0 Channel Capacity - 1 per 6 DS1s			UEPMG	VUM14	738.36	0.00	0.00					19.99	19.99		
	192 DS0 Channel Capacity -1 per 8 DS1s			UEPMG	VUM19	984.48	0.00	0.00					19.99	19.99		
	240 DS0 Channel Capacity - 1 per 10 DS1s			UEPMG	VUM2O	1,230.60	0.00	0.00					19.99	19.99		
	288 DS0 Channel Capacity - 1 per 12 DS1s			UEPMG	VUM28	1,476.72	0.00	0.00					19.99	19.99		
	384 DS0 Channel Capacity - 1 per 16 DS1s			UEPMG	VUM38	1,968.96	0.00	0.00					19.99	19.99		
	480 DS0 Channel Capacity - 1 per 20 DS1s			UEPMG	VUM4O	2,461.20	0.00	0.00					19.99	19.99		
	576 DS0 Channel Capacity -1 per 24 DS1s			UEPMG	VUM57	2,953.44	0.00	0.00					19.99	19.99		
	672 DS0 Channel Capacity - 1 per 28 DS1s			UEPMG	VUM67	3,445.68	0.00	0.00					19.99	19.99		
	Non-Recurring Charges (NRC) Associated with 4-Wire DS1 Loop with Channeliztion with Port - Conversion Charge Based on a System															
	A Minimum System configuration is One (1) DS1, One (1) D4 Channel Bank, and Up To 24 DSO Ports with Feature Activations.															
	Multiples of this configuration functioning as one are considered Add'l after the minimum system configuration is counted.															
	NRC - Conversion (Currently Combined) with or without BellSouth Allowed Changes			UEPMG	USAC4	0.00	330.61	16.64					19.99	19.99		
	System Additions at End User Locations Where 4-Wire DS1 Loop with Channelization with Port Combination Currently Exists and															
	New (Not Currently Combined) in all states, except in Density Zone 1 of Top 8 MSA's															
	1 DS1/D4 Channel Bank - Additionally Add NRC for each Port and Assoc Fea Activation (E:4/1/2004)			UEPMG	VUMD4	0.00	743.74	326.22	149.02	17.68			19.99	19.99		
	Bipolar 8 Zero Substitution															
	Clear Channel Capability Format, superframe - Subsequent Activity Only			UEPMG	CCOSF	0.00	0.00i	615.00s								
	Clear Channel Capability Format - Extended Superframe - Subsequent Activity Only			UEPMG	CCOEF	0.00	0.00i	615.00s								
	Alternate Mark Inversion (AMI)															
	Superframe Format			UEPMG	MCOSF	0.00	0.00	0.00								
	Extended Superframe Format			UEPMG	MCOPO	0.00	0.00	0.00								
	Exchange Ports Associated with 4-Wire DS1 Loop with Channelization with Port															
	Exchange Ports															
	Line Side Combination Channelized PBX Trunk Port - Business (E:4/1/2004)			UEPPX	UEPCX	2.28	0.00	0.00	0.00	0.00			40.18	9.45		
	Line Side Outward Channelized PBX Trunk Port - Business (E:4/1/2004)			UEPPX	UEPOX	2.28	0.00	0.00	0.00	0.00			40.18	9.45		
	Line Side Inward Only Channelized PBX Trunk Port without DID (E:4/1/2004)			UEPPX	UEP1X	2.28	0.00	0.00	0.00	0.00			40.18	9.45		

UNBUNDLED NETWORK ELEMENTS - North Carolina														Attachment: 2		Exhibit: A	
CATEGORY		RATE ELEMENTS	Interim	Zone	BCS	USOC	RATES ($)					Svc Order Submitted Elec per LSR	Svc Order Submitted Manually per LSR	Incremental Charge - Manual Svc Order vs. Electronic-1st	Incremental Charge - Manual Svc Order vs. Electronic-Add'l	Incremental Charge - Manual Svc Order vs. Electronic-Disc 1st	Incremental Charge - Manual Svc Order vs. Electronic-Disc Add'l
							Rec	Nonrecurring		Nonrecurring Disconnect		OSS Rates ($)					
								First	Add'l	First	Add'l	SOMEC	SOMAN	SOMAN	SOMAN	SOMAN	SOMAN
		2-Wire Trunk Side Unbundled Channelized DID Trunk Port (E:4/1/2004)			UEPPX	UEPDM	13.26	0.00	0.00	0.00	0.00			40.18	9.45		
	Feature Activations - Unbundled Loop Concentration																
		Feature (Service) Activation for each Line Port Terminated in D4 Bank			UEPPX	1PQWM	0.65	25.27	13.34	4.15	4.12			40.18	9.45		
		Feature (Service) Activation for each Trunk Port Terminated in D4 Bank			UEPPX	1PQWU	0.65	77.75	18.33	58.74	11.48			40.18	9.45		
	Telephone Number/ Group Establishment Charges for DID Service																
		DID Trunk Termination (1 per Port)			UEPPX	NDT	0.00	0.00	0.00								
		Estab Trk Grp and Provide 1st 20 DID Nos. (FL,GA, NC,& SC)			UEPPX	NDZ	0.00	0.00	0.00								
		DID Numbers - groups of 20 - Valid all States			UEPPX	ND4	0.00	0.00	0.00								
		Non-Consecutive DID Numbers - per number			UEPPX	ND5	0.00	0.00	0.00								
		Reserve Non-Consecutive DID Numbers			UEPPX	ND6	0.00	0.00	0.00								
		Reserve DID Numbers			UEPPX	NDV	0.00	0.00	0.00								
	Local Number Portability																
		Local Number Portability - 1 per port			UEPPX	LNPCP	3.15	0.00	0.00								
	FEATURES - Vertical and Optional																
	Local Switching Features Offered with Line Side Ports Only																
		All Features Available			UEPPX	UEPVF	3.40	0.00	0.00					40.18	9.45		
UNBUNDLED CENTREX PORT/LOOP COMBINATIONS - COST BASED RATES																	
	1. Cost Based Rates are applied where BellSouth is required by FCC and/or State Commission rule to provide Unbundled Local Switching or Switch Ports.																
	2. Features shall apply to the Unbundled Port/Loop Combination - Cost Based Rate section in the same manner as they are applied to the Stand-Alone Unbundled Port section of this Rate Exhibit.																
	3. End Office and Tandem Switching Usage and Common Transport Usage rates in the Port section of this rate exhibit shall apply to all combinations of loop/port network elements except for UNE Coin Port/Loop Combinations.																
	4. The first and additional Port nonrecurring charges apply to Not Currently Combined Combos. For Currently Combined Combos, the nonrecurring charges shall be those identified in the Nonrecurring - Currently Combined sections. Additional NRCs may apply also and are categorized accordingly.																
	5. Market Rates for Unbundled Centrex Port/Loop Combination will be negotiated on an Individual Case Basis, until further notice.																
	UNE-P CENTREX - 5ESS (Valid in All States)																
	2-Wire VG Loop/2-Wire Voice Grade Port (Centrex) Combo																
	UNE Port/Loop Combination Rates (Non-Design)																
		2-Wire VG Loop/2-Wire Voice Grade Port (Centrex) Port Combo - Non-Design		1	UEP95		13.03										
		2-Wire VG Loop/2-Wire Voice Grade Port (Centrex)Port Combo - Non-Design		2	UEP95		21.33										
		2-Wire VG Loop/2-Wire Voice Grade Port (Centrex)Port Combo - Non-Design		3	UEP95		32.61										
	UNE Port/Loop Combination Rates (Design)																
		2-Wire VG Loop/2-Wire Voice Grade Port (Centrex) Port Combo - Design		1	UEP95		17.25										
		2-Wire VG Loop/2-Wire Voice Grade Port (Centrex)Port Combo - Design		2	UEP95		28.21										
		2-Wire VG Loop/2-Wire Voice Grade Port (Centrex)Port Combo - Design		3	UEP95		43.09										
	UNE Loop Rate																
		2-Wire Voice Grade Loop (SL 1) - Zone 1		1	UEP95	UECS1	10.75										
		2-Wire Voice Grade Loop (SL 1) - Zone 2		2	UEP95	UECS1	19.05										
		2-Wire Voice Grade Loop (SL 1) - Zone 3		3	UEP95	UECS1	30.33										
		2-Wire Voice Grade Loop (SL 2) - Zone 1		1	UEP95	UECS2	14.97										
		2-Wire Voice Grade Loop (SL 2) - Zone 2		2	UEP95	UECS2	25.93										
		2-Wire Voice Grade Loop (SL 2) - Zone 3		3	UEP95	UECS2	40.81										
	UNE Port Rate																
	All States																
		2-Wire Voice Grade Port (Centrex) Basic Local Area			UEP95	UEPYA	2.28	79.59	63.97					40.18	9.45		
		2-Wire Voice Grade Port (Centrex 800 termination)			UEP95	UEPYB	2.28	79.59	63.97					40.18	9.45		
		2-Wire Voice Grade Port (Centrex with Caller ID)1Basic Local Area			UEP95	UEPYH	2.28	79.59	63.97					40.18	9.45		
		2-Wire Voice Grade Port (Centrex from diff Serving Wire Center)2,3 Basic Local Area			UEP95	UEPYM	2.28	164.57	128.16					40.18	9.45		
		2-Wire Voice Grade Port, Diff Serving Wire Center 2,3 - 800 Service Term - Basic Local Area			UEP95	UEPYZ	2.28							40.18	9.45		

UNBUNDLED NETWORK ELEMENTS - North Carolina														Attachment: 2		Exhibit: A	
CATEGORY		RATE ELEMENTS	Interim	Zone	BCS	USOC	RATES ($)					Svc Order Submitted Elec per LSR	Svc Order Submitted Manually per LSR	Incremental Charge - Manual Svc Order vs. Electronic-1st	Incremental Charge - Manual Svc Order vs. Electronic-Add'l	Incremental Charge - Manual Svc Order vs. Electronic-Disc 1st	Incremental Charge - Manual Svc Order vs. Electronic-Disc Add'l
							Rec	Nonrecurring		Nonrecurring Disconnect		OSS Rates ($)					
								First	Add'l	First	Add'l	SOMEC	SOMAN	SOMAN	SOMAN	SOMAN	SOMAN
		2-Wire Voice Grade Port terminated in on Megalink or equivalent - Basic Local Area			UEP95	UEPY9	2.28	79.59	63.97					40.18	9.45		
		2-Wire Voice Grade Port Terminated on 800 Service Term - Basic Local Area			UEP95	UEPY2	2.28	79.59	63.97					40.18	9.45		
	NC Only																
		2-Wire Voice Grade Port (Centrex)			UEP95	UEPUA	2.28	79.59	63.97					40.18	9.45		
		2-Wire Voice Grade Port (Centrex 800 termination)			UEP95	UEPUB	2.28	79.59	63.97					40.18	9.45		
		2-Wire Voice Grade Port (Centrex with Caller ID)1			UEP95	UEPUH	2.28	79.59	63.97					40.18	9.45		
		2-Wire Voice Grade Port (Centrex from diff Serving Wire Center)2,3			UEP95	UEPUM	2.28	164.57	128.16					40.18	9.45		
		2-Wire Voice Grade Port, Diff Serving Wire Center - 800 Service Term 2,3			UEP95	UEPUZ	2.28	164.57	128.16					40.18	9.45		
		2-Wire Voice Grade Port terminated in on Megalink or equivalent			UEP95	UEPU9	2.28	79.59	63.97					40.18	9.45		
		2-Wire Voice Grade Port Terminated on 800 Service Term			UEP95	UEPU2	2.28	79.59	63.97					40.18	9.45		
	Local Switching																
		Centrex Intercom Funtionality, per port			UEP95	URECS	0.903										
	Local Number Portability																
		Local Number Portability (1 per port)			UEP95	LNPCC	0.35										
	Features																
		All Standard Features Offered, per port			UEP95	UEPVF	3.40										
		All Select Features Offered, per port			UEP95	UEPVS	0.00	457.83									
		All Centrex Control Features Offered, per port			UEP95	UEPVC	3.40										
	NARS																
		Unbundled Network Access Register - Combination			UEP95	UARCX	0.00	0.00	0.00	0.00	0.00		0.00	40.18	9.45		
		Unbundled Network Access Register - Indial			UEP95	UAR1X	0.00	0.00	0.00	0.00	0.00		0.00	40.18	9.45		
		Unbundled Network Access Register - Outdial			UEP95	UAROX	0.00	0.00	0.00	0.00	0.00		0.00	40.18	9.45		
	Miscellaneous Terminations																
	2-Wire Trunk Side																
		Trunk Side Terminations, each			UEP95	CEND6	12.36										
	4-Wire Digital (1.544 Megabits)																
		DS1 Circuit Terminations, each			UEP95	M1HD1	123.65							40.18	9.45		
		DS0 Channels Activated, each			UEP95	M1HDO	0.00	28.81						40.18	9.45		
	Interoffice Channel Mileage - 2-Wire																
		Interoffice Channel Facilities Termination			UEP95	M1GBC	18.00										
		Interoffice Channel mileage, per mile or fraction of mile			UEP95	M1GBM	0.0282										
	Feature Activations (DS0) Centrex Loops on Channelized DS1 Service																
	D4 Channel Bank Feature Activations																
		Feature Activation on D-4 Channel Bank Centrex Loop Slot			UEP95	1PQWS	0.65										
		Feature Activation on D-4 Channel Bank FX line Side Loop Slot			UEP95	1PQW6	0.65										
		Feature Activation on D-4 Channel Bank FX Trunk Side Loop Slot			UEP95	1PQW7	0.65										
		Feature Activation on D-4 Channel Bank Centrex Loop Slot - Different Wire Center			UEP95	1PQWP	0.65										
		Feature Activation on D-4 Channel Bank Private Line Loop Slot			UEP95	1PQWV	0.65										
		Feature Activation on D-4 Channel Bank Tjie Line/Trunk Loop Slot			UEP95	1PQWQ	0.65										
		Feature Activation on D-4 Channel Bank WATS Loop Slot			UEP95	1PQWA	0.65										
	Non-Recurring Charges (NRC) Associated with UNE-P Centrex																
		NRC Conversion Currently Combined Switch-As-Is with allowed changes, per port			UEP95	USAC2		2.77	0.40					40.18	9.45		
		New Centrex Standard Common Block			UEP95	M1ACS	0.00	695.11						40.18	9.45		
		New Centrex Customized Common Block			UEP95	M1ACC	0.00	695.11						40.18	9.45		
		NAR Establishment Charge, Per Occasion			UEP95	URECA	0.00	72.73						40.18	9.45		
	Additional Non-Recurring Charges (NRC)																
		Unbundled Miscellaneous Rate Element, Tag Loop at End Use Premise			UEP95	URETL		8.33	0.83								

UNBUNDLED NETWORK ELEMENTS - North Carolina														Attachment: 2		Exhibit: A	
CATEGORY		RATE ELEMENTS	Interim	Zone	BCS	USOC	RATES ($)					Svc Order Submitted Elec per LSR	Svc Order Submitted Manually per LSR	Incremental Charge - Manual Svc Order vs. Electronic-1st	Incremental Charge - Manual Svc Order vs. Electronic-Add'l	Incremental Charge - Manual Svc Order vs. Electronic-Disc 1st	Incremental Charge - Manual Svc Order vs. Electronic-Disc Add'l
							Rec	Nonrecurring		Nonrecurring Disconnect		OSS Rates ($)					
								First	Add'l	First	Add'l	SOMEC	SOMAN	SOMAN	SOMAN	SOMAN	SOMAN
		Unbundled Miscellaneous Rate Element, Tag Design Loop at End Use Premise			UEP95	URETN		11.20	1.10								
	UNE-P CENTREX - DMS100 (Valid in All States)																
	2-Wire VG Loop/2-Wire Voice Grade Port (Centrex) Combo																
	UNE Port/Loop Combination Rates (Non-Design)																
		2-Wire VG Loop/2-Wire Voice Grade Port (Centrex) Port Combo - Non-Design		1	UEP9D		13.03										
		2-Wire VG Loop/2-Wire Voice Grade Port (Centrex)Port Combo - Non-Design		2	UEP9D		21.33										
		2-Wire VG Loop/2-Wire Voice Grade Port (Centrex)Port Combo - Non-Design		3	UEP9D		32.61										
	UNE Port/Loop Combination Rates (Design)																
		2-Wire VG Loop/2-Wire Voice Grade Port (Centrex) Port Combo - Design		1	UEP9D		17.25										
		2-Wire VG Loop/2-Wire Voice Grade Port (Centrex)Port Combo - Design		2	UEP9D		28.21										
		2-Wire VG Loop/2-Wire Voice Grade Port (Centrex)Port Combo - Design		3	UEP9D		43.09										
	UNE Loop Rate																
		2-Wire Voice Grade Loop (SL 1) - Zone 1		1	UEP9D	UECS1	10.75										
		2-Wire Voice Grade Loop (SL 1) - Zone 2		2	UEP9D	UECS1	19.05										
		2-Wire Voice Grade Loop (SL 1) - Zone 3		3	UEP9D	UECS1	30.33										
		2-Wire Voice Grade Loop (SL 2) - Zone 1		1	UEP9D	UECS2	14.97										
		2-Wire Voice Grade Loop (SL 2) - Zone 2		2	UEP9D	UECS2	25.93										
		2-Wire Voice Grade Loop (SL 2) - Zone 3		3	UEP9D	UECS2	40.81										
	UNE Port Rate																
	ALL STATES																
		2-Wire Voice Grade Port (Centrex) Basic Local Area			UEP9D	UEPYA	2.28	79.59	63.97					40.18	9.45		
		2-Wire Voice Grade Port (Centrex 800 termination)Basic Local Area			UEP9D	UEPYB	2.28	79.59	63.97					40.18	9.45		
		2-Wire Voice Grade Port (Centrex / EBS-PSET)3Basic Local Area			UEP9D	UEPYC	2.28	79.59	63.97					40.18	9.45		
		2-Wire Voice Grade Port (Centrex / EBS-M5009)3Basic Local Area			UEP9D	UEPYD	2.28	79.59	63.97					40.18	9.45		
		2-Wire Voice Grade Port (Centrex / EBS-M5209))3 Basic Local Area			UEP9D	UEPYE	2.28	79.59	63.97					40.18	9.45		
		2-Wire Voice Grade Port (Centrex / EBS-M5112))3 Basic Local Area			UEP9D	UEPYF	2.28	79.59	63.97					40.18	9.45		
		2-Wire Voice Grade Port (Centrex / EBS-M5312))3Basic Local Area			UEP9D	UEPYG	2.28	79.59	63.97					40.18	9.45		
		2-Wire Voice Grade Port (Centrex / EBS-M5008))3 Basic Local Area			UEP9D	UEPYT	2.28	79.59	63.97					40.18	9.45		
		2-Wire Voice Grade Port (Centrex / EBS-M5208))3 Basic Local Area			UEP9D	UEPYU	2.28	79.59	63.97					40.18	9.45		
		2-Wire Voice Grade Port (Centrex / EBS-M5216))3 Basic Local Area			UEP9D	UEPYV	2.28	79.59	63.97					40.18	9.45		
		2-Wire Voice Grade Port (Centrex / EBS-M5316))3 Basic Local Area			UEP9D	UEPY3	2.28	79.59	63.97					40.18	9.45		
		2-Wire Voice Grade Port (Centrex with Caller ID) Basic Local Area			UEP9D	UEPYH	2.28	79.59	63.97					40.18	9.45		
		2-Wire Voice Grade Port (Centrex/Caller ID/Msg Wtg Lamp Indication))4 Basic Local Area			UEP9D	UEPYW	2.28	79.59	63.97					40.18	9.45		
		2-Wire Voice Grade Port (Centrex/Msg Wtg Lamp Indication))4 Basic Local Area			UEP9D	UEPYJ	2.28	79.59	63.97					40.18	9.45		
		2-Wire Voice Grade Port (Centrex from diff Serving Wire Center) 2,3-Basic Local Area			UEP9D	UEPYM	2.28	164.57	128.16					40.18	9.45		
		2-Wire Voice Grade Port (Centrex/differ SWC /EBS-PSET)2,3,4 Basic Local Area			UEP9D	UEPYO	2.28	164.57	128.16					40.18	9.45		

UNBUNDLED NETWORK ELEMENTS - North Carolina														Attachment: 2		Exhibit: A	
CATEGORY		RATE ELEMENTS	Interim	Zone	BCS	USOC	RATES ($)					Svc Order Submitted Elec per LSR	Svc Order Submitted Manually per LSR	Incremental Charge - Manual Svc Order vs. Electronic-1st	Incremental Charge - Manual Svc Order vs. Electronic-Add'l	Incremental Charge - Manual Svc Order vs. Electronic-Disc 1st	Incremental Charge - Manual Svc Order vs. Electronic-Disc Add'l
							Rec	Nonrecurring		Nonrecurring Disconnect		OSS Rates ($)					
								First	Add'l	First	Add'l	SOMEC	SOMAN	SOMAN	SOMAN	SOMAN	SOMAN
		2-Wire Voice Grade Port (Centrex/differ SWC /EBS-M5009)2,3,4 Basic Local Area			UEP9D	UEPYP	2.28	164.57	128.16					40.18	9.45		
		2-Wire Voice Grade Port (Centrex/differ SWC /EBS-5209)2,3,4 Basic Local Area			UEP9D	UEPYQ	2.28	164.57	128.16					40.18	9.45		
		2-Wire Voice Grade Port (Centrex/differ SWC /EBS-M5112)2,3,4 Basic Local Area			UEP9D	UEPYR	2.28	164.57	128.16					40.18	9.45		
		2-Wire Voice Grade Port (Centrex/differ SWC /EBS-M5312)2,3,4 Basic Local Area			UEP9D	UEPYS	2.28	164.57	128.16					40.18	9.45		
		2-Wire Voice Grade Port (Centrex/differ SWC /EBS-M5008)2,3,4 Basic Local Area			UEP9D	UEPY4	2.28	164.57	128.16					40.18	9.45		
		2-Wire Voice Grade Port (Centrex/differ SWC /EBS-M5208)2, 3 Basic Local Area			UEP9D	UEPY5	2.28	164.57	128.16					40.18	9.45		
		2-Wire Voice Grade Port (Centrex/differ SWC /EBS-M5216)2,3,4 Basic Local Area			UEP9D	UEPY6	2.28	164.57	128.16					40.18	9.45		
		2-Wire Voice Grade Port (Centrex/differ SWC /EBS-M5316)2,3,4 Basic Local Area			UEP9D	UEPY7	2.28	164.57	128.16					40.18	9.45		
		2-Wire Voice Grade Port, Diff Serving Wire Center - 800 Service Term 2,3			UEP9D	UEPYZ	2.28	164.57	128.16					40.18	9.45		
		2-Wire Voice Grade Port terminated in on Megalink or equivalent Basic Local Area			UEP9D	UEPY9	2.28	79.59	63.97					40.18	9.45		
		2-Wire Voice Grade Port Terminated on 800 Service Term Basic Local Area			UEP9D	UEPY2	2.28	79.59	63.97					40.18	9.45		
	NC Only																
		2-Wire Voice Grade Port (Centrex)			UEP9D	UEPUA	2.28	79.59	63.97					40.18	9.45		
		2-Wire Voice Grade Port (Centrex 800 termination)			UEP9D	UEPUB	2.28	79.59	63.97					40.18	9.45		
		2-Wire Voice Grade Port (Centrex / EBS-PSET)4			UEP9D	UEPUC	2.28	79.59	63.97					40.18	9.45		
		2-Wire Voice Grade Port (Centrex / EBS-M5009)4			UEP9D	UEPUD	2.28	79.59	63.97					40.18	9.45		
		2-Wire Voice Grade Port (Centrex / EBS-M5209)4			UEP9D	UEPUE	2.28	79.59	63.97					40.18	9.45		
		2-Wire Voice Grade Port (Centrex / EBS-M5112)4			UEP9D	UEPUF	2.28	79.59	63.97					40.18	9.45		
		2-Wire Voice Grade Port (Centrex / EBS-M5312)4			UEP9D	UEPUG	2.28	79.59	63.97					40.18	9.45		
		2-Wire Voice Grade Port (Centrex / EBS-M5008)4			UEP9D	UEPUT	2.28	79.59	63.97					40.18	9.45		
		2-Wire Voice Grade Port (Centrex / EBS-M5208)4			UEP9D	UEPUU	2.28	79.59	63.97					40.18	9.45		
		2-Wire Voice Grade Port (Centrex / EBS-M5216)4			UEP9D	UEPUV	2.28	79.59	63.97					40.18	9.45		
		2-Wire Voice Grade Port (Centrex / EBS-M5316)4			UEP9D	UEPU3	2.28	79.59	63.97					40.18	9.45		
		2-Wire Voice Grade Port (Centrex with Caller ID)			UEP9D	UEPUH	2.28	79.59	63.97					40.18	9.45		
		2-Wire Voice Grade Port (Centrex/Caller ID/Msg Wtg Lamp Indication)4			UEP9D	UEPUW	2.28	79.59	63.97					40.18	9.45		
		2-Wire Voice Grade Port (Centrex/Msg Wtg Lamp Indication)4			UEP9D	UEPUJ	2.28	79.59	63.97					40.18	9.45		
		2-Wire Voice Grade Port (Centrex from diff Serving Wire Center) 2,3			UEP9D	UEPUM	2.28	164.57	128.16					40.18	9.45		
		2-Wire Voice Grade Port (Centrex/differ SWC /EBS-PSET)2,3,4			UEP9D	UEPUO	2.28	164.57	128.16					40.18	9.45		
		2-Wire Voice Grade Port (Centrex/differ SWC /EBS-M5009)2,3,4			UEP9D	UEPUP	2.28	164.57	128.16					40.18	9.45		
		2-Wire Voice Grade Port (Centrex/differ SWC /EBS-5209)2,3,4			UEP9D	UEPUQ	2.28	164.57	128.16					40.18	9.45		
		2-Wire Voice Grade Port (Centrex/differ SWC /EBS-M5112)2,3,4			UEP9D	UEPUR	2.28	164.57	128.16					40.18	9.45		
		2-Wire Voice Grade Port (Centrex/differ SWC /EBS-M5312)2,3,4			UEP9D	UEPUS	2.28	164.57	128.16					40.18	9.45		
		2-Wire Voice Grade Port (Centrex/differ SWC /EBS-M5008)2,3,4			UEP9D	UEPU4	2.28	164.57	128.16					40.18	9.45		
		2-Wire Voice Grade Port (Centrex/differ SWC /EBS-M5208)2,3,4			UEP9D	UEPU5	2.28	164.57	128.16					40.18	9.45		
		2-Wire Voice Grade Port (Centrex/differ SWC /EBS-M5216)2,3,4			UEP9D	UEPU6	2.28	164.57	128.16					40.18	9.45		
		2-Wire Voice Grade Port (Centrex/differ SWC /EBS-M5316)2,3,4			UEP9D	UEPU7	2.28	164.57	128.16					40.18	9.45		

UNBUNDLED NETWORK ELEMENTS - North Carolina													Attachment: 2		Exhibit: A	
CATEGORY	RATE ELEMENTS	Interim	Zone	BCS	USOC	RATES ($)					Svc Order Submitted Elec per LSR	Svc Order Submitted Manually per LSR	Incremental Charge - Manual Svc Order vs. Electronic-1st	Incremental Charge - Manual Svc Order vs. Electronic-Add'l	Incremental Charge - Manual Svc Order vs. Electronic-Disc 1st	Incremental Charge - Manual Svc Order vs. Electronic-Disc Add'l
						Rec	Nonrecurring		Nonrecurring Disconnect		OSS Rates ($)					
							First	Add'l	First	Add'l	SOMEC	SOMAN	SOMAN	SOMAN	SOMAN	SOMAN
	2-Wire Voice Grade Port, Diff Serving Wire Center - 800 Service Term 2,3			UEP9D	UEPUZ	2.28	164.57	128.16					40.18	9.45		
	2-Wire Voice Grade Port terminated in on Megalink or equivalent			UEP9D	UEPU9	2.28	79.59	63.97					40.18	9.45		
	2-Wire Voice Grade Port Terminated on 800 Service Term			UEP9D	UEPU2	2.28	79.59	63.97					40.18	9.45		
Local Switching																
	Centrex Intercom Funtionality, per port			UEP9D	URECS	0.903										
Local Number Portability																
	Local Number Portability (1 per port)			UEP9D	LNPCC	0.35										
Features																
	All Standard Features Offered, per port			UEP9D	UEPVF	3.40										
	All Select Features Offered, per port			UEP9D	UEPVS	0.00	457.83						40.18	9.45		
	All Centrex Control Features Offered, per port			UEP9D	UEPVC	3.40										
NARS																
	Unbundled Network Access Register - Combination			UEP9D	UARCX	0.00	0.00	0.00	0.00	0.00		0.00	40.18	9.45		
	Unbundled Network Access Register - Inward			UEP9D	UAR1X	0.00	0.00	0.00	0.00	0.00		0.00	40.18	9.45		
	Unbundled Network Access Register - Outdial			UEP9D	UAROX	0.00	0.00	0.00	0.00	0.00		0.00	40.18	9.45		
Miscellaneous Terminations																
2-Wire Trunk Side																
	Trunk Side Terminations, each			UEP9D	CEND6	12.36										
4-Wire Digital (1.544 Megabits)																
	DS1 Circuit Terminations, each			UEP9D	M1HD1	123.65							40.18	9.45		
	DS0 Channels Activiated per Channel			UEP9D	M1HDO	0.00	28.81						40.18	9.45		
Interoffice Channel Mileage - 2-Wire																
	Interoffice Channel Facilities Termination			UEP9D	M1GBC	18.00										
	Interoffice Channel mileage, per mile or fraction of mile			UEP9D	M1GBM	0.0282										
Feature Activations (DS0) Centrex Loops on Channelized DS1 Service																
D4 Channel Bank Feature Activations																
	Feature Activation on D-4 Channel Bank Centrex Loop Slot			UEP9D	1PQWS	0.65										
	Feature Activation on D-4 Channel Bank FX line Side Loop Slot			UEP9D	1PQW6	0.65										
	Feature Activation on D-4 Channel Bank FX Trunk Side Loop Slot			UEP9D	1PQW7	0.65										
	Feature Activation on D-4 Channel Bank Centrex Loop Slot - Different Wire Center			UEP9D	1PQWP	0.65										
	Feature Activation on D-4 Channel Bank Private Line Loop Slot			UEP9D	1PQWV	0.65										
	Feature Activation on D-4 Channel Bank Tjie Line/Trunk Loop Slot			UEP9D	1PQWQ	0.65										
	Feature Activation on D-4 Channel Bank WATS Loop Slot			UEP9D	1PQWA	0.65										
Non-Recurring Charges (NRC) Associated with UNE-P Centrex																
	NRC Conversion Currently Combined Switch-As-Is with allowed changes, per port			UEP9D	USAC2		2.77	0.40					40.18	9.45		
	New Centrex Standard Common Block			UEP9D	M1ACS	0.00	695.11						40.18	9.45		
	New Centrex Customized Common Block			UEP9D	M1ACC	0.00	695.11						40.18	9.45		
	NAR Establishment Charge, Per Occasion			UEP9D	URECA	0.00	72.73						40.18	9.45		
Additional Non-Recurring Charges (NRC)																
	Unbundled Miscellaneous Rate Element, Tag Loop at End Use Premise			UEP9D	URETL		8.33	0.83								
	Unbundled Miscellaneous Rate Element, Tag Design Loop at End Use Premise			UEP9D	URETN		11.20	1.10								
Note 1 - Required Port for Centrex Control in 1AESS, 5ESS & EWSD																
Note 2 - Requres Interoffice Channel Mileage																
Note 3 - Installation is combination of Installation charge for SL2 Loop and Port																
Note 4 - Requires Specific Customer Premises Equipment																
Note: Rates displaying an "R" in Interim column are interim and subject to rate true-up as set forth in General Terms and Conditions.																

UNBUNDLED NETWORK ELEMENTS - South Carolina														Attachment: 2		Exhibit: A	
CATEGORY		RATE ELEMENTS	Interim	Zone	BCS	USOC	RATES ($)					Svc Order Submitted Elec per LSR	Svc Order Submitted Manually per LSR	Incremental Charge - Manual Svc Order vs. Electronic-1st	Incremental Charge - Manual Svc Order vs. Electronic-Add'l	Incremental Charge - Manual Svc Order vs. Electronic-Disc 1st	Incremental Charge - Manual Svc Order vs. Electronic-Disc Add'l
							Rec	Nonrecurring		Nonrecurring Disconnect		OSS Rates ($)					
								First	Add'l	First	Add'l	SOMEC	SOMAN	SOMAN	SOMAN	SOMAN	SOMAN
	The "Zone" shown in the sections for stand-alone loops or loops as part of a combination refers to Geographically Deaveraged UNE Zones. To view Geographically Deaveraged UNE Zone Designations by Central Office, refer to internet Website: http://www.interconnection.bellsouth.com/become_a_clec/html/interconnection.htm																
OPERATIONAL SUPPORT SYSTEMS (OSS) - "REGIONAL RATES"																	
	NOTE: (1) CLEC should contact its contract negotiator if it prefers the "state specific" OSS charges as ordered by the State Commissions. The OSS charges currently contained in this rate exhibit are the BellSouth "regional" service ordering charges. CLEC may elect either the state specific Commission ordered rates for the service ordering charges, or CLEC may elect the regional service ordering charge, however, CLEC can not obtain a mixture of the two regardless if CLEC has a interconnection contract established in each of the 9 states.																
	NOTE: (2) Any element that can be ordered electronically will be billed according to the SOMEC rate listed in this category. Please refer to BellSouth's Local Ordering Handbook (LOH) to determine if a product can be ordered electronically. For those elements that cannot be ordered electronically at present per the LOH, the listed SOMEC rate in this category reflects the charge that would be billed to a CLEC once electronic ordering capabilities come on-line for that element. Otherwise, the manual ordering charge, SOMAN, will be applied to a CLECs bill when it submits an LSR to BellSouth.																
		OSS - Electronic Service Order Charge, Per Local Service Request (LSR) - UNE Only				SOMEC		3.50	0.00	3.50	0.00						
		OSS - Manual Service Order Charge, Per Local Service Request (LSR) - UNE Only				SOMAN		15.69	0.00	1.97	0.00						
UNE SERVICE DATE ADVANCEMENT CHARGE																	
	NOTE: The Expedite charge will be maintained commensurate with BellSouth's FCC No.1 Tariff, Section 5 as applicable.																
		UNE Expedite Charge per Circuit or Line Assignable USOC, per Day			UAL, UEANL, UCL, UEF, UDF, UEQ, UDL, UENTW, UDN, UEA, UHL, ULC, USL, U1T12, U1T48, U1TD1, U1TD3, U1TDX, U1TO3, U1TS1, U1TVX, UC1BC, UC1BL, UC1CC, UC1CL, UC1DC, UC1DL, UC1EC, UC1EL, UC1FC, UC1FL, UC1GC, UC1GL, UC1HC, UC1HL, UDL12, UDL48, UDLO3, UDLSX, UE3, ULD12, ULD48, ULDD1, ULDD3, ULDDX, ULDO3, ULDS1, ULDVX, UNC1X, UNC3X, UNCDX, UNCNX, UNCSX, UNCVX, UNLD1, UNLD3, UXTD1, UXTD3, UXTS1, U1TUC, U1TUD, U1TUB, U1TUA	SDASP		200.00									
UNBUNDLED EXCHANGE ACCESS LOOP																	
	2-WIRE ANALOG VOICE GRADE LOOP																
		2-Wire Analog Voice Grade Loop - Service Level 1- Zone 1		1	UEANL	UEAL2	14.94	37.92	17.62	23.56	5.32						
		2-Wire Analog Voice Grade Loop - Service Level 1- Zone 2		2	UEANL	UEAL2	21.39	37.92	17.62	23.56	5.32						
		2-Wire Analog Voice Grade Loop - Service Level 1- Zone 3		3	UEANL	UEAL2	26.72	37.92	17.62	23.56	5.32						
		2-Wire Analog Voice Grade Loop - Service Level 1- Zone 1		1	UEANL	UEASL	14.94	37.92	17.62	23.56	5.32						
		2-Wire Analog Voice Grade Loop - Service Level 1- Zone 2		2	UEANL	UEASL	21.39	37.92	17.62	23.56	5.32						
		2-Wire Analog Voice Grade Loop - Service Level 1- Zone 3		3	UEANL	UEASL	26.72	37.92	17.62	23.56	5.32						
		Unbundled Miscellaneous Rate Element, Tag Loop at End User Premise			UEANL	URETL		8.33	0.83								
		Loop Testing - Basic 1st Half Hour			UEANL	URET1		34.23	34.23								
		Loop Testing - Basic Additional Half Hour			UEANL	URETA		19.90	19.90								

UNBUNDLED NETWORK ELEMENTS - South Carolina														Attachment: 2		Exhibit: A	
CATEGORY		RATE ELEMENTS	Interim	Zone	BCS	USOC	RATES ($)					Svc Order Submitted Elec per LSR	Svc Order Submitted Manually per LSR	Incremental Charge - Manual Svc Order vs. Electronic-1st	Incremental Charge - Manual Svc Order vs. Electronic-Add'l	Incremental Charge - Manual Svc Order vs. Electronic-Disc 1st	Incremental Charge - Manual Svc Order vs. Electronic-Disc Add'l
							Rec	Nonrecurring		Nonrecurring Disconnect		OSS Rates ($)					
								First	Add'l	First	Add'l	SOMEC	SOMAN	SOMAN	SOMAN	SOMAN	SOMAN
		CLEC to CLEC Conversion Charge Without Outside Dispatch (UVL-SL1)			UEANL	UREWO		15.81	8.96								
		Unbundled Voice Loop, Non-Design Voice Loop, billing for BST providing make-up (Engineering Information - E.I.)			UEANL	UEANM		13.47	13.47								
		Manual Order Coordination for UVL-SL1s (per loop)			UEANL	UEAMC		8.17	8.17								
		Order Coordination for Specified Conversion Time for UVL-SL1 (per LSR)			UEANL	OCOSL		18.13	18.13								
	2-WIRE Unbundled COPPER LOOP																
		2-Wire Unbundled Copper Loop - Non-Designed Zone 1		1	UEQ	UEQ2X	12.94	36.40	16.10	22.66	4.42						
		2 Wire Unbundled Copper Loop - Non-Designed - Zone 2		2	UEQ	UEQ2X	14.51	36.40	16.10	22.66	4.42						
		2 Wire Unbundled Copper Loop - Non-Designed - Zone 3		3	UEQ	UEQ2X	15.02	36.40	16.10	22.66	4.42						
		Unbundled Miscellaneous Rate Element, Tag Loop at End User Premise			UEQ	URETL		8.33	0.83								
		Manual Order Coordination 2 Wire Unbundled Copper Loop - Non-Designed (per loop)			UEQ	USBMC		8.17	8.17								
		Unbundled Copper Loop, Non-Design Copper Loop, billing for BST providing make-up (Engineering Information - E.I.)			UEQ	UEQMU		13.47	13.47								
		Loop Testing - Basic 1st Half Hour			UEQ	URET1		34.23	34.23								
		Loop Testing - Basic Additional Half Hour			UEQ	URETA		19.90	19.90								
		CLEC to CLEC Conversion Charge Without Outside Dispatch (UCL-ND)			UEQ	UREWO		14.30	7.45								
UNBUNDLED EXCHANGE ACCESS LOOP																	
	2-WIRE ANALOG VOICE GRADE LOOP																
		2 Wire Analog Voice Grade Loop-Service Level 1-Line Splitting-Zone 1		1	UEPSR UEPSB	UEALS	14.94	37.92	17.62	23.56	5.32						
		2 Wire Analog Voice Grade Loop-Service Level 1-Line Splitting-Zone 1		1	UEPSR UEPSB	UEABS	14.94	37.92	17.62	23.56	5.32						
		2 Wire Analog Voice Grade Loop- Service Level 1-Line Splitting-Zone 2		2	UEPSR UEPSB	UEALS	21.39	37.92	17.62	23.56	5.32						
		2 Wire Analog Voice Grade Loop- Service Level 1-Line Splitting-Zone 2		2	UEPSR UEPSB	UEABS	21.39	37.92	17.62	23.56	5.32						
		2 Wire Analog Voice Grade Loop-Service Level 1-Line Splitting-Zone 3		3	UEPSR UEPSB	UEALS	26.72	37.92	17.62	23.56	5.32						
		2 Wire Analog Voice Grade Loop-Service Level 1-Line Splitting-Zone 3		3	UEPSR UEPSB	UEABS	26.72	37.92	17.62	23.56	5.32						
UNBUNDLED EXCHANGE ACCESS LOOP																	
	2-WIRE ANALOG VOICE GRADE LOOP																
		2-Wire Analog Voice Grade Loop - Service Level 2 w/Loop or Ground Start Signaling - Zone 1		1	UEA	UEAL2	16.68	105.98	68.43	53.05	10.61						
		2-Wire Analog Voice Grade Loop - Service Level 2 w/Loop or Ground Start Signaling - Zone 2		2	UEA	UEAL2	23.13	105.98	68.43	53.05	10.61						
		2-Wire Analog Voice Grade Loop - Service Level 2 w/Loop or Ground Start Signaling - Zone 3		3	UEA	UEAL2	28.46	105.98	68.43	53.05	10.61						
		Order Coordination for Specified Conversion Time (per LSR)			UEA	OCOSL		18.13									
		2-Wire Analog Voice Grade Loop - Service Level 2 w/Reverse Battery Signaling - Zone 1		1	UEA	UEAR2	16.68	105.98	68.43	53.05	10.61						
		2-Wire Analog Voice Grade Loop - Service Level 2 w/Reverse Battery Signaling - Zone 2		2	UEA	UEAR2	23.13	105.98	68.43	53.05	10.61						
		2-Wire Analog Voice Grade Loop - Service Level 2 w/Reverse Battery Signaling - Zone 3		3	UEA	UEAR2	28.46	105.98	68.43	53.05	10.61						
		Order Coordination for Specified Conversion Time (per LSR)			UEA	OCOSL		18.13									
		CLEC to CLEC Conversion Charge without outside dispatch			UEA	UREWO		87.90	36.44								
		Loop Tagging - Service Level 2 (SL2)			UEA	URETL		11.24	1.10								
	4-WIRE ANALOG VOICE GRADE LOOP																
		4-Wire Analog Voice Grade Loop - Zone 1		1	UEA	UEAL4	32.59	132.38	94.83	59.35	14.61						
		4-Wire Analog Voice Grade Loop - Zone 2		2	UEA	UEAL4	43.89	132.38	94.83	59.35	14.61						
		4-Wire Analog Voice Grade Loop - Zone 3		3	UEA	UEAL4	43.38	132.38	94.83	59.35	14.61						
		Order Coordination for Specified Conversion Time (per LSR)			UEA	OCOSL		18.13									
		CLEC to CLEC Conversion Charge without outside dispatch			UEA	UREWO		87.90	36.44								

UNBUNDLED NETWORK ELEMENTS - South Carolina														Attachment: 2		Exhibit: A	
CATEGORY		RATE ELEMENTS	Interim	Zone	BCS	USOC	RATES ($)					Svc Order Submitted Elec per LSR	Svc Order Submitted Manually per LSR	Incremental Charge - Manual Svc Order vs. Electronic-1st	Incremental Charge - Manual Svc Order vs. Electronic-Add'l	Incremental Charge - Manual Svc Order vs. Electronic-Disc 1st	Incremental Charge - Manual Svc Order vs. Electronic-Disc Add'l
							Rec	Nonrecurring		Nonrecurring Disconnect		OSS Rates ($)					
								First	Add'l	First	Add'l	SOMEC	SOMAN	SOMAN	SOMAN	SOMAN	SOMAN
	2-WIRE ISDN DIGITAL GRADE LOOP																
		2-Wire ISDN Digital Grade Loop - Zone 1		1	UDN	U1L2X	25.21	117.58	80.03	53.05	10.61						
		2-Wire ISDN Digital Grade Loop - Zone 2		2	UDN	U1L2X	32.76	117.58	80.03	53.05	10.61						
		2-Wire ISDN Digital Grade Loop - Zone 3		3	UDN	U1L2X	37.70	117.58	80.03	53.05	10.61						
		Order Coordination For Specified Conversion Time (per LSR)			UDN	OCOSL		18.13									
		CLEC to CLEC Conversion Charge without outside dispatch			UDN	UREWO		91.82	44.25								
	2-WIRE ASYMMETRICAL DIGITAL SUBSCRIBER LINE (ADSL) COMPATIBLE LOOP																
		2 Wire Unbundled ADSL Loop including manual service inquiry & facility reservation - Zone 1		1	UAL	UAL2X	12.19	120.84	70.56	50.37	7.93						
		2 Wire Unbundled ADSL Loop including manual service inquiry & facility reservation - Zone 2		2	UAL	UAL2X	13.71	120.84	70.56	50.37	7.93						
		2 Wire Unbundled ADSL Loop including manual service inquiry & facility reservation - Zone 3		3	UAL	UAL2X	14.14	120.84	70.56	50.37	7.93						
		Order Coordination for Specified Conversion Time (per LSR)			UAL	OCOSL		18.13									
		2 Wire Unbundled ADSL Loop without manual service inquiry & facility reservaton - Zone 1		1	UAL	UAL2W	12.19	95.81	57.82	50.37	7.93						
		2 Wire Unbundled ADSL Loop without manual service inquiry & facility reservaton - Zone 2		2	UAL	UAL2W	13.71	95.81	57.82	50.37	7.93						
		2 Wire Unbundled ADSL Loop without manual service inquiry & facility reservaton - Zone 3		3	UAL	UAL2W	14.14	95.81	57.82	50.37	7.93						
		Order Coordination for Specified Conversion Time (per LSR)			UAL	OCOSL		18.13									
		CLEC to CLEC Conversion Charge without outside dispatch			UAL	UREWO		86.38	40.48								
	2-WIRE HIGH BIT RATE DIGITAL SUBSCRIBER LINE (HDSL) COMPATIBLE LOOP																
		2 Wire Unbundled HDSL Loop including manual service inquiry & facility reservation - Zone 1		1	UHL	UHL2X	9.58	129.52	79.24	50.37	7.93						
		2 Wire Unbundled HDSL Loop including manual service inquiry & facility reservation - Zone 2		2	UHL	UHL2X	10.92	129.52	79.24	50.37	7.93						
		2 Wire Unbundled HDSL Loop including manual service inquiry & facility reservation - Zone 3		3	UHL	UHL2X	11.40	129.52	79.24	50.37	7.93						
		Order Coordination for Specified Conversion Time (per LSR)			UHL	OCOSL		18.13									
		2 Wire Unbundled HDSL Loop without manual service inquiry and facility reservation - Zone 1		1	UHL	UHL2W	9.58	104.49	66.50	50.37	7.93						
		2 Wire Unbundled HDSL Loop without manual service inquiry and facility reservation - Zone 2		2	UHL	UHL2W	10.92	104.49	66.50	50.37	7.93						
		2 Wire Unbundled HDSL Loop without manual service inquiry and facility reservation - Zone 3		3	UHL	UHL2W	11.40	104.49	66.50	50.37	7.93						
		Order Coordination for Specified Conversion Time (per LSR)			UHL	OCOSL		18.13									
		CLEC to CLEC Conversion Charge without outside dispatch			UHL	UREWO		86.32	40.48								
	4-WIRE HIGH BIT RATE DIGITAL SUBSCRIBER LINE (HDSL) COMPATIBLE LOOP																
		4 Wire Unbundled HDSL Loop including manual service inquiry and facility reservation - Zone 1		1	UHL	UHL4X	16.02	158.18	107.89	55.12	10.38						
		4-Wire Unbundled HDSL Loop including manual service inquiry and facility reservation - Zone 2		2	UHL	UHL4X	14.33	158.18	107.89	55.12	10.38						
		4-Wire Unbundled HDSL Loop including manual service inquiry and facility reservation - Zone 3		3	UHL	UHL4X	16.84	158.18	107.89	55.12	10.38						
		Order Coordination for Specified Conversion Time (per LSR)			UHL	OCOSL		18.13									
		4-Wire Unbundled HDSL Loop without manual service inquiry and facility reservation - Zone 1		1	UHL	UHL4W	16.02	133.14	95.16	55.12	10.38						
		4-Wire Unbundled HDSL Loop without manual service inquiry and facility reservation - Zone 2		2	UHL	UHL4W	14.33	133.14	95.16	55.12	10.38						
		4-Wire Unbundled HDSL Loop without manual service inquiry and facility reservation - Zone 3		3	UHL	UHL4W	16.84	133.14	95.16	55.12	10.38						
		Order Coordination for Specified Conversion Time (per LSR)			UHL	OCOSL		18.13									
		CLEC to CLEC Conversion Charge without outside dispatch			UHL	UREWO		86.32	40.48								
	4-WIRE DS1 DIGITAL LOOP																
		4-Wire DS1 Digital Loop - Zone 1		1	USL	USLXX	79.51	253.03	157.89	44.80	11.73						
		4-Wire DS1 Digital Loop - Zone 2		2	USL	USLXX	136.00	253.03	157.89	44.80	11.73						
		4-Wire DS1 Digital Loop - Zone 3		3	USL	USLXX	229.15	253.03	157.89	44.80	11.73						
		Order Coordination for Specified Conversion Time (per LSR)			USL	OCOSL		18.13									

UNBUNDLED NETWORK ELEMENTS - South Carolina														Attachment: 2		Exhibit: A	
CATEGORY		RATE ELEMENTS	Interim	Zone	BCS	USOC	RATES ($)					Svc Order Submitted Elec per LSR	Svc Order Submitted Manually per LSR	Incremental Charge - Manual Svc Order vs. Electronic-1st	Incremental Charge - Manual Svc Order vs. Electronic-Add'l	Incremental Charge - Manual Svc Order vs. Electronic-Disc 1st	Incremental Charge - Manual Svc Order vs. Electronic-Disc Add'l
							Rec	Nonrecurring		Nonrecurring Disconnect		OSS Rates ($)					
								First	Add'l	First	Add'l	SOMEC	SOMAN	SOMAN	SOMAN	SOMAN	SOMAN
		CLEC to CLEC Conversion Charge without outside dispatch			USL	UREWO		101.30	43.13								
	4-WIRE 19.2, 56 OR 64 KBPS DIGITAL GRADE LOOP																
		4 Wire Unbundled Digital 19.2 Kbps		1	UDL	UDL19	29.93	126.66	89.12	59.35	14.61						
		4 Wire Unbundled Digital 19.2 Kbps		2	UDL	UDL19	33.99	126.66	89.12	59.35	14.61						
		4 Wire Unbundled Digital 19.2 Kbps		3	UDL	UDL19	34.74	126.66	89.12	59.35	14.61						
		4 Wire Unbundled Digital Loop 56 Kbps - Zone 1		1	UDL	UDL56	29.93	126.66	89.12	59.35	14.61						
		4 Wire Unbundled Digital Loop 56 Kbps - Zone 2		2	UDL	UDL56	33.99	126.66	89.12	59.35	14.61						
		4 Wire Unbundled Digital Loop 56 Kbps - Zone 3		3	UDL	UDL56	34.74	126.66	89.12	59.35	14.61						
		Order Coordination for Specified Conversion Time (per LSR)			UDL	OCOSL		18.13									
		4 Wire Unbundled Digital Loop 64 Kbps - Zone 1		1	UDL	UDL64	29.93	126.66	89.12	59.35	14.61						
		4 Wire Unbundled Digital Loop 64 Kbps - Zone 2		2	UDL	UDL64	33.99	126.66	89.12	59.35	14.61						
		4 Wire Unbundled Digital Loop 64 Kbps - Zone 3		3	UDL	UDL64	34.74	126.66	89.12	59.35	14.61						
		Order Coordination for Specified Conversion Time (per LSR)			UDL	OCOSL		18.13									
		CLEC to CLEC Conversion Charge without outside dispatch			UDL	UREWO		102.34	49.85								
	2-WIRE Unbundled COPPER LOOP																
		2-Wire Unbundled Copper Loop-Designed including manual service inquiry & facility reservation - Zone 1		1	UCL	UCLPB	12.19	119.91	69.62	50.37	7.93						
		2-Wire Unbundled Copper Loop-Designed including manual service inquiry & facility reservation - Zone 2		2	UCL	UCLPB	13.71	119.91	69.62	50.37	7.93						
		2 Wire Unbundled Copper Loop-Designed including manual service inquiry & facility reservation - Zone 3		3	UCL	UCLPB	14.14	119.91	69.62	50.37	7.93						
		Order Coordination for Unbundled Copper Loops (per loop)			UCL	UCLMC		8.17	8.17								
		2-Wire Unbundled Copper Loop-Designed without manual service inquiry and facility reservation - Zone 1		1	UCL	UCLPW	12.19	94.87	56.89	50.37	7.93						
		2-Wire Unbundled Copper Loop-Designed without manual service inquiry and facility reservation - Zone 2		2	UCL	UCLPW	13.71	94.87	56.89	50.37	7.93						
		2-Wire Unbundled Copper Loop-Designed without manual service inquiry and facility reservation - Zone 3		3	UCL	UCLPW	14.14	94.87	56.89	50.37	7.93						
		Order Coordination for Unbundled Copper Loops (per loop)			UCL	UCLMC		8.17	8.17								
		CLEC to CLEC Conversion Charge without outside dispatch (UCL-Des)			UCL	UREWO		94.87	42.57								
	4-WIRE COPPER LOOP																
		4-Wire Copper Loop-Designed including manual service inquiry and facility reservation - Zone 1		1	UCL	UCL4S	19.64	144.17	93.88	55.12	10.38						
		4-Wire Copper Loop-Designed including manual service inquiry and facility reservation - Zone 2		2	UCL	UCL4S	20.90	144.17	93.88	55.12	10.38						
		4-Wire Copper Loop-Designed including manual service inquiry and facility reservation - Zone 3		3	UCL	UCL4S	19.34	144.17	93.88	55.12	10.38						
		Order Coordination for Unbundled Copper Loops (per loop)			UCL	UCLMC		8.17	8.17								
		4-Wire Copper Loop-Designed without manual service inquiry and facility reservation - Zone 1		1	UCL	UCL4W	19.64	119.13	81.15	55.12	10.38						
		4-Wire Copper Loop-Designed without manual service inquiry and facility reservation - Zone 2		2	UCL	UCL4W	20.90	119.13	81.15	55.12	10.38						
		4-Wire Copper Loop-Designed without manual service inquiry and facility reservation - Zone 3		3	UCL	UCL4W	19.34	119.13	81.15	55.12	10.38						
		Order Coordination for Unbundled Copper Loops (per loop)			UCL	UCLMC		8.17	8.17								
		CLEC to CLEC Conversion Charge without outside dispatch (UCL-Des)			UCL	UREWO		94.87	42.57								
LOOP MODIFICATION																	
		Unbundled Loop Modification, Removal of Load Coils - 2 Wire pair less than or equal to 18k ft, per Unbundled Loop			UAL, UHL, UCL, UEQ, ULS, UEA, UEANL, UEPSR, UEPSB	ULM2L		32.46	32.46								
		Unbundled Loop Modification Removal of Load Coils - 4 Wire less than or equal to 18K ft, per Unbundled Loop			UHL, UCL, UEA	ULM4L		32.46	32.46								
		Unbundled Loop Modification Removal of Bridged Tap Removal, per unbundled loop			UAL, UHL, UCL, UEQ, ULS, UEA, UEANL, UEPSR, UEPSB	ULMBT		32.48	32.48								

UNBUNDLED NETWORK ELEMENTS - South Carolina														Attachment: 2		Exhibit: A	
CATEGORY		RATE ELEMENTS	Interim	Zone	BCS	USOC	RATES ($)					Svc Order Submitted Elec per LSR	Svc Order Submitted Manually per LSR	Incremental Charge - Manual Svc Order vs. Electronic-1st	Incremental Charge - Manual Svc Order vs. Electronic-Add'l	Incremental Charge - Manual Svc Order vs. Electronic-Disc 1st	Incremental Charge - Manual Svc Order vs. Electronic-Disc Add'l
							Rec	Nonrecurring		Nonrecurring Disconnect		OSS Rates ($)					
								First	Add'l	First	Add'l	SOMEC	SOMAN	SOMAN	SOMAN	SOMAN	SOMAN
SUB-LOOPS																	
	Sub-Loop Distribution																
		Sub-Loop - Per Cross Box Location - CLEC Feeder Facility Set-Up	I		UEANL	USBSA		241.42	241.42								
		Sub-Loop - Per Cross Box Location - Per 25 Pair Panel Set-Up	I		UEANL	USBSB		22.69	22.69								
		Sub-Loop - Per Building Equipment Room - CLEC Feeder Facility Set-Up	I		UEANL	USBSC		177.84	177.84								
		Sub-Loop - Per Building Equipment Room - Per 25 Pair Panel Set-Up	I		UEANL	USBSD		55.58	55.58								
		Sub-Loop Distribution Per 2-Wire Analog Voice Grade Loop - Zone 1	I	1	UEANL	USBN2	8.87	65.94	31.03	45.35	6.71						
		Sub-Loop Distribution Per 2-Wire Analog Voice Grade Loop - Zone 2	I	2	UEANL	USBN2	12.58	65.94	31.03	45.35	6.71						
		Sub-Loop Distribution Per 2-Wire Analog Voice Grade Loop - Zone 3	I	3	UEANL	USBN2	14.79	65.94	31.03	45.35	6.71						
		Order Coordination for Unbundled Sub-Loops, per sub-loop pair			UEANL	USBMC		8.17	8.17								
		Sub-Loop Distribution Per 4-Wire Analog Voice Grade Loop - Zone 1		1	UEANL	USBN4	14.11	79.21	44.29	49.82	9.09						
		Sub-Loop Distribution Per 4-Wire Analog Voice Grade Loop - Zone 2		2	UEANL	USBN4	19.40	79.21	44.29	49.82	9.09						
		Sub-Loop Distribution Per 4-Wire Analog Voice Grade Loop - Zone 3		3	UEANL	USBN4	18.90	79.21	44.29	49.82	9.09						
		Order Coordination for Unbundled Sub-Loops, per sub-loop pair			UEANL	USBMC		8.17	8.17								
		Sub-Loop 2-Wire Intrabuilding Network Cable (INC)	I		UEANL	USBR2	2.41	53.13	18.21	45.35	6.71						
		Order Coordination for Unbundled Sub-Loops, per sub-loop pair			UEANL	USBMC		8.17	8.17								
		Sub-Loop 4-Wire Intrabuilding Network Cable (INC)	I		UEANL	USBR4	5.36	59.38	24.47	49.82	9.09						
		Order Coordination for Unbundled Sub-Loops, per sub-loop pair			UEANL	USBMC		8.17	8.17								
		Loop Testing - Basic 1st Half Hour			UEANL	URET1		34.23	34.23								
		Loop Testing - Basic Additional Half Hour			UEANL	URETA		19.90	19.90								
		2 Wire Copper Unbundled Sub-Loop Distribution - Zone 1	I	1	UEF	UCS2X	7.11	65.94	31.03	45.35	6.71						
		2 Wire Copper Unbundled Sub-Loop Distribution - Zone 2	I	2	UEF	UCS2X	9.83	65.94	31.03	45.35	6.71						
		2 Wire Copper Unbundled Sub-Loop Distribution - Zone 3	I	3	UEF	UCS2X	10.48	65.94	31.03	45.35	6.71						
		Order Coordination for Unbundled Sub-Loops, per sub-loop pair			UEF	USBMC		8.17	8.17								
		4 Wire Copper Unbundled Sub-Loop Distribution - Zone 1	I	1	UEF	UCS4X	7.85	79.21	44.29	49.82	9.09						
		4 Wire Copper Unbundled Sub-Loop Distribution - Zone 2	I	2	UEF	UCS4X	14.17	79.21	44.29	49.82	9.09						
		4 Wire Copper Unbundled Sub-Loop Distribution - Zone 3	I	3	UEF	UCS4X	12.64	79.21	44.29	49.82	9.09						
		Order Coordination for Unbundled Sub-Loops, per sub-loop pair			UEF	USBMC		8.17	8.17								
		Loop Testing - Basic 1st Half Hour			UEF	URET1		34.23	34.23								
		Loop Testing - Basic Additional Half Hour			UEF	URETA		19.90	19.90								
	Unbundled Network Terminating Wire (UNTW)																
		Unbundled Network Terminating Wire (UNTW) per Pair			UENTW	UENPP	0.3303	30.20	30.20								
	Network Interface Device (NID)																
		Network Interface Device (NID) - 1-2 lines			UENTW	UND12		43.68	28.79								
		Network Interface Device (NID) - 1-6 lines			UENTW	UND16		64.42	49.53								
		Network Interface Device Cross Connect - 2 W			UENTW	UNDC2		5.92	5.92								
		Network Interface Device Cross Connect - 4W			UENTW	UNDC4		5.92	5.92								
UNE OTHER, PROVISIONING ONLY - NO RATE																	
		NID - Dispatch and Service Order for NID installation			UENTW	UNDBX	0.00	0.00									
		UNTW Circuit Id Establishment, Provisioning Only - No Rate			UENTW	UENCE	0.00	0.00									
		Unbundled Contract Name, Provisioning Only - No Rate			UEANL,UEF,UEQ,UENTW	UNECN	0.00	0.00									
UNE OTHER, PROVISIONING ONLY - NO RATE																	

UNBUNDLED NETWORK ELEMENTS - South Carolina														Attachment: 2		Exhibit: A	
CATEGORY		RATE ELEMENTS	Interim	Zone	BCS	USOC	RATES ($)					Svc Order Submitted Elec per LSR	Svc Order Submitted Manually per LSR	Incremental Charge - Manual Svc Order vs. Electronic-1st	Incremental Charge - Manual Svc Order vs. Electronic-Add'l	Incremental Charge - Manual Svc Order vs. Electronic-Disc 1st	Incremental Charge - Manual Svc Order vs. Electronic-Disc Add'l
							Rec	Nonrecurring		Nonrecurring Disconnect		OSS Rates ($)					
								First	Add'l	First	Add'l	SOMEC	SOMAN	SOMAN	SOMAN	SOMAN	SOMAN
		Unbundled Contact Name, Provisioning Only - no rate			UAL,UCL,UDC,UDL, UDN,UEA,UHL,ULC	UNECN	0.00	0.00									
		Unbundled Sub-Loop Feeder-2 Wire Cross Box Jumper - no rate			UEA,UDN,UCL,UDC	USBFQ	0.00	0.00									
		Unbundled Sub-Loop Feeder-4 Wire Cross Box Jumper - no rate			UEA,USL,UCL,UDL	USBFR	0.00	0.00									
		Unbundled DS1 Loop - Superframe Format Option - no rate			USL	CCOSF	0.00	0.00									
		Unbundled DS1 Loop - Expanded Superframe Format option - no rate			USL	CCOEF	0.00	0.00									
HIGH CAPACITY UNBUNDLED LOCAL LOOP																	
		High Capacity Unbundled Local Loop - DS3 - Per Mile per month			UE3	1L5ND	12.26										
		High Capacity Unbundled Local Loop - DS3 - Facility Termination per month			UE3	UE3PX	306.36	452.52	264.53	119.75	83.77						
		High Capacity Unbundled Local Loop - STS-1 - Per Mile per month			UDLSX	1L5ND	12.26										
		High Capacity Unbundled Local Loop - STS-1 - Facility Termination per month			UDLSX	UDLS1	313.49	452.52	264.53	119.75	83.77						
LOOP MAKE-UP																	
		Loop Makeup - Preordering Without Reservation, per working or spare facility queried (Manual).			UMK	UMKLW		24.04	24.04								
		Loop Makeup - Preordering With Reservation, per spare facility queried (Manual).			UMK	UMKLP		25.49	25.49								
		Loop Makeup--With or Without Reservation, per working or spare facility queried (Mechanized)			UMK	UMKMQ		0.34	0.34								
LINE SHARING AND LINE SPLITTING																	
	NOTE 1: The Line Sharing monthly recurring rates for all installations completed from October 02, 2003 through midnight October 01, 2004 shall be billed as follows:																
	NOTE 1: 10/02/2003 – 10/01/2004: 25% of the rate for an unbundled copper loop non-designed ("UCLND")																
	NOTE 1: 10/02/2004 – 10/01/2005: 50% of the rate for UCLND																
	NOTE 1: 10/02/2005 – 10/01/2006: 75% of the rate for UCLND																
	NOTE 1: Above will apply to USOCS: ULSDT and ULSCT																
	****NOTE 2: The Line Sharing monthly recurring rates with USOCs ULSDC and ULSCC applies only to circuits installed and inservice on or before October 1, 2003**																
	LINE SHARING																
	SPLITTERS-CENTRAL OFFICE BASED																
		Line Sharing Splitter, per System 96 Line Capacity			ULS	ULSDA	216.22	189.21	0.00	178.38	0.00						
		Line Sharing Splitter, per System 24 Line Capacity			ULS	ULSDB	54.05	189.21	0.00	178.38	0.00						
		Line Sharing Splitter, Per System, 8 Line Capacity			ULS	ULSD8	18.02	189.21	0.00	178.38	0.00						
		Line Sharing-DLEC Owned Splitter in CO-CFA activaton-deactivation (per LSOD)			ULS	ULSDG		86.67	0.00	49.95	0.00						
	END USER ORDERING-CENTRAL OFFICE BASED LINE SHARING																
		Line Sharing - per Line Activation (BST Owned splitter) - OBSOLETE see **NOTE 2			ULS	ULSDC	0.61	18.55	10.62	10.04	4.93						
		Line Share Service, TRO per line activation, BST owned splitter - Central Office Located (25% of UCLND) - please see NOTE 1 (E:10/2/2003)			ULS	ULSDT	3.24	18.55	10.62	10.04	4.93						
		Line Share Service, TRO per line activation, BST owned splitter - Central Office Located (50% of UCLND) - please see NOTE 1 (E:10/2/2004)			ULS	ULSDT	6.47	18.55	10.62	10.04	4.93						
		Line Share Service, TRO per line activation, BST owned splitter - Central Office Located (75% of UCLND) - please see NOTE 1 (E:10/2/2005)			ULS	ULSDT	9.71	18.55	10.62	10.04	4.93						
		Line Sharing - per Subsequent Activity per Line Rearrangement(BST Owned Splitter)			ULS	ULSDS		16.42	8.21								
		Line Sharing - per Subsequent Activity per Line Rearrangement(DLEC Owned Splitter)			ULS	ULSCS		16.42	8.21								
		Line Sharing - per Line Activation (DLEC owned Splitter) - OBSOLETE see **NOTE 2			ULS	ULSCC	0.61	47.44	19.31	20.67	12.74						

UNBUNDLED NETWORK ELEMENTS - South Carolina														Attachment: 2		Exhibit: A	
CATEGORY		RATE ELEMENTS	Interim	Zone	BCS	USOC	RATES ($)					Svc Order Submitted Elec per LSR	Svc Order Submitted Manually per LSR	Incremental Charge - Manual Svc Order vs. Electronic-1st	Incremental Charge - Manual Svc Order vs. Electronic-Add'l	Incremental Charge - Manual Svc Order vs. Electronic-Disc 1st	Incremental Charge - Manual Svc Order vs. Electronic-Disc Add'l
							Rec	Nonrecurring		Nonrecurring Disconnect		OSS Rates ($)					
								First	Add'l	First	Add'l	SOMEC	SOMAN	SOMAN	SOMAN	SOMAN	SOMAN
		Line Share Service, TRO per line activation, CLEC owned splitter - Central Office Located (25% of UCLND) - please see NOTE 1 (E:10/2/2003)			ULS	ULSCT	3.24	47.44	19.31	20.67	12.74						
		Line Share Service, TRO per line activation, CLEC owned splitter - Central Office Located (50% of UCLND) - please see NOTE 1 (E:10/2/2004)			ULS	ULSCT	6.47	47.44	19.31	20.67	12.74						
		Line Share Service, TRO per line activation, CLEC owned splitter - Central Office Located (75% of UCLND) - please see NOTE 1 (E:10/2/2005)			ULS	ULSCT	9.71	47.44	19.31	20.67	12.74						
	LINE SPLITTING																
	END USER ORDERING-CENTRAL OFFICE BASED																
		Line Splitting - per line activation DLEC owned splitter			UEPSR UEPSB	UREOS	0.61										
		Line Splitting - per line activation BST owned - physical			UEPSR UEPSB	UREBP	0.61	37.09	21.24	20.07	9.85						
		Line Splitting - per line activation BST owned - virtual			UEPSR UEPSB	UREBV	0.61	37.09	21.24	20.07	9.85						
	MAINTENANCE																
		No Trouble Found - per 1/2 hour increments - Basic						80.00	55.00								
		No Trouble Found - per 1/2 hour increments - Overtime						120.00	82.50								
		No Trouble Found - per 1/2 hour increments - Premium						160.00	110.00								
UNBUNDLED DEDICATED TRANSPORT																	
	INTEROFFICE CHANNEL - DEDICATED TRANSPORT																
		Interoffice Channel - Dedicated Transport - 2-Wire Voice Grade - Per Mile per month			U1TVX	1L5XX	0.0167										
		Interoffice Channel - Dedicated Transport- 2- Wire Voice Grade - Facility Termination			U1TVX	U1TV2	24.30	40.63	27.47	16.77	6.91						
		Interoffice Channel - Dedicated Transpor t- 2-Wire Voice Grade Rev Bat. - Per Mile per month			U1TVX	1L5XX	0.0167										
		Interoffice Channel - Dedicated Transport- 2- Wire VG Rev Bat. - Facility Termination			U1TVX	U1TR2	24.30	40.63	27.47	16.77	6.91						
		Interoffice Channel - Dedicated Transport - 4-Wire Voice Grade - Per Mile per month			U1TVX	1L5XX	0.0167										
		Interoffice Channel - Dedicated Transport - 4- Wire Voice Grade - Facility Termination			U1TVX	U1TV4	21.29	40.63	27.47	16.77	6.91						
		Interoffice Channel - Dedicated Transport - 56 kbps - per mile per month			U1TDX	1L5XX	0.0167										
		Interoffice Channel - Dedicated Transport - 56 kbps - Facility Termination			U1TDX	U1TD5	16.76	40.63	27.47	16.77	6.91						
		Interoffice Channel - Dedicated Transport - 64 kbps - per mile per month			U1TDX	1L5XX	0.0167										
		Interoffice Channel - Dedicated Transport - 64 kbps - Facility Termination			U1TDX	U1TD6	16.76	40.63	27.47	16.77	6.91						
		Interoffice Channel - Dedicated Channel - DS1 - Per Mile per month			U1TD1	1L5XX	0.3415										
		Interoffice Channel - Dedicated Tranport - DS1 - Facility Termination			U1TD1	U1TF1	77.14	89.47	81.99	16.39	14.48						
		Interoffice Channel - Dedicated Transport - DS3 - Per Mile per month			U1TD3	1L5XX	8.02										
		Interoffice Channel - Dedicated Transport - DS3 - Facility Termination per month			U1TD3	U1TF3	880.65	279.37	163.12	60.33	58.59						
		Interoffice Channel - Dedicated Transport - STS-1 - Per Mile per month			U1TS1	1L5XX	8.02										
		Interoffice Channel - Dedicated Transport - STS-1 - Facility Termination			U1TS1	U1TFS	880.55	279.37	163.12	60.33	58.59						
DARK FIBER																	
		Dark Fiber, Four Fiber Strands, Per Route Mile or Fraction Thereof per month - Interoffice Channel			UDF, UDFCX	1L5DF	36.41										
		NRC Dark Fiber - Interoffice Channel			UDF, UDFCX	UDF14		640.51	138.17	317.76	198.11						
		Dark Fiber, Four Fiber Strands, Per Route Mile or Fraction Thereof per month - Local Loop			UDF, UDFCX	1L5DL	97.65										
		NRC Dark Fiber - Local Loop			UDF, UDFCX	UDFL4		640.51	138.17	317.76	198.11						

UNBUNDLED NETWORK ELEMENTS - South Carolina													Attachment: 2		Exhibit: A	
CATEGORY		RATE ELEMENTS	Interim	Zone	BCS	USOC	RATES ($)					Svc Order Submitted Elec per LSR	Svc Order Submitted Manually per LSR	Incremental Charge - Manual Svc Order vs. Electronic-1st	Incremental Charge - Manual Svc Order vs. Electronic-Add'l	Incremental Charge - Manual Svc Order vs. Electronic-Disc 1st	Incremental Charge - Manual Svc Order vs. Electronic-Disc Add'l
							Rec	Nonrecurring		Nonrecurring Disconnect		OSS Rates ($)					
								First	Add'l	First	Add'l	SOMEC	SOMAN	SOMAN	SOMAN	SOMAN	SOMAN
8XX ACCESS TEN DIGIT SCREENING																	
		8XX Access Ten Digit Screening, Per Call			OHD		0.0006673										
		8XX Access Ten Digit Screening, Reservation Charge Per 8XX Number Reserved			OHD	N8R1X		2.59	0.44								
		8XX Access Ten Digit Screening, Per 8XX No. Established W/O POTS Translations			OHD			5.95	0.81	4.58	0.54						
		8XX Access Ten Digit Screening, Per 8XX No. Established With POTS Translations			OHD	N8FTX		5.95	0.81	4.58	0.54						
		8XX Access Ten Digit Screening, Customized Area of Service Per 8XX Number			OHD	N8FCX		2.59	1.30								
		8XX Access Ten Digit Screening, Multiple InterLATA CXR Routing Per CXR Requested Per 8XX No.			OHD	N8FMX		3.03	1.74								
		8XX Access Ten Digit Screening, Change Charge Per Request			OHD	N8FAX		3.03	0.44								
		8XX Access Ten Digit Screening, Call Handling and Destination Features			OHD	N8FDX		2.59	2.59								
		8XX Access Ten Digit Screening, w/ 8XX No. Delivery			OHD		0.0006673										
		8XX Access Ten Digit Screening, w/ POTS No. Delivery			OHD		0.0006673										
LINE INFORMATION DATA BASE ACCESS (LIDB)																	
		LIDB Common Transport Per Query			OQT		0.0000246										
		LIDB Validation Per Query			OQU		0.0138158										
		LIDB Originating Point Code Establishment or Change			OQT, OQU	NRBPX		34.40		42.18							
SIGNALING (CCS7)																	
		CCS7 Signaling Connection, Per 56 Kbps Facility			UDB	TPP++	16.93	35.61	35.61	16.48	16.48						
		CCS7 Signaling Termination, Per STP Port			UDB	PT8SX	163.49										
		CCS7 Signaling Usage, Per TCAP Message			UDB		0.0000692										
		CCS7 Signaling Connection, Per link (A link)			UDB	TPP++	16.93	35.61	35.61	16.48	16.48						
		CCS7 Signaling Connection, Per link (B link) (also known as D link)			UDB	TPP++	16.93	35.61	35.61	16.48	16.48						
		CCS7 Signaling Usage, Per ISUP Message			UDB		0.0000173										
		CCS7 Signaling Usage Surrogate, per link per LATA			UDB	STU56	791.37										
		CCS7 Signaling Point Code, per Originating Point Code Establishment or Change, per STP affected			UDB	CCAPO		29.08	29.08	35.65	35.65						
		CCS7 Signaling Point Code, per Destination Point Code Establishment or Change, Per Stp Affected			UDB	CCAPD		29.08	29.08	35.65	35.65						
E911 SERVICE																	
		Local Channel - Dedicated - 2-wr Voice Grade					15.33	193.53	33.24	36.72	3.21						
		Interoffice Transport - Dedicated - 2-wr Voice Grade Per Mile					0.0167										
		Interoffice Transport - Dedicated - 2-wr Voice Grade Per Facility Termination					24.30	40.63	27.47	16.77	6.91						
		Local Channel - Dedicated - DS1 - Zone 1					42.62	177.87	154.06	22.24	15.30						
		Local Channel - Dedicated - DS1 - Zone 2					70.32	177.87	154.06	22.24	15.30						
		Local Channel - Dedicated - DS1 - Zone 3					190.68	177.87	154.06	22.24	15.30						
		Interoffice Transport - Dedicated - DS1 Per Mile					0.3415										
		Interoffice Transport - Dedicated - DS1 Per Facility Termination					77.14	89.47	81.99	16.39	14.48						
CALLING NAME (CNAM) SERVICE																	
		CNAM For DB Owners - Service Establishment			OQV			23.00	23.00	21.15	21.15						
		CNAM For Non DB Owners - Service Establishment			OQV			23.00	23.00	21.15	21.15						
		CNAM For DB Owners - Service Provisioning With Point Code Establishment			OQV			993.09	734.47	269.53	198.18						
		CNAM For Non DB Owners - Service Provisioning With Point Code Establishment			OQV			343.09	245.69	275.87	198.18						
		CNAM for DB Owners, Per Query			OQV		0.0010433										
		CNAM for Non DB Owners, Per Query			OQV		0.0010433										
SELECTIVE ROUTING																	
		Selective Routing Per Unique Line Class Code Per Request Per Switch						84.89	84.89	14.14	14.14						
VIRTUAL COLLOCATION																	

UNBUNDLED NETWORK ELEMENTS - South Carolina														Attachment: 2		Exhibit: A	
CATEGORY		RATE ELEMENTS	Interim	Zone	BCS	USOC	RATES ($)					Svc Order Submitted Elec per LSR	Svc Order Submitted Manually per LSR	Incremental Charge - Manual Svc Order vs. Electronic-1st	Incremental Charge - Manual Svc Order vs. Electronic-Add'l	Incremental Charge - Manual Svc Order vs. Electronic-Disc 1st	Incremental Charge - Manual Svc Order vs. Electronic-Disc Add'l
							Rec	Nonrecurring		Nonrecurring Disconnect		OSS Rates ($)					
								First	Add'l	First	Add'l	SOMEC	SOMAN	SOMAN	SOMAN	SOMAN	SOMAN
		Virtual Collocation-2 Wire Cross Connects (Loop) for Line Splitting			UEPSR UEPSB	VE1LS	0.0317	12.32	11.83	6.04	5.45						
PHYSICAL COLLOCATION																	
		Physical Collocation-2 Wire Cross Connects (Loop) for Line Splitting			UEPSR UEPSB	PE1LS	0.0341	12.32	11.83	6.04	5.45						
AIN SELECTIVE CARRIER ROUTING																	
		Regional Service Establishment			SRC	SRCEC		101,324.34	101,324.34	8,609.85	8,609.85						
		End Office Establishment			SRC	SRCEO		175.66	175.66	1.70	1.70						
		Query NRC, per query			SRC		0.0035036										
AIN - BELLSOUTH AIN SMS ACCESS SERVICE																	
		AIN SMS Access Service - Service Establishment, Per State, Initial Setup			A1N	CAMSE		39.53	39.53	40.78	40.78						
		AIN SMS Access Service - Port Connection - Dial/Shared Access			A1N	CAMDP		7.85	7.85	9.11	9.11						
		AIN SMS Access Service - Port Connection - ISDN Access			A1N	CAM1P		7.85	7.85	9.11	9.11						
		AIN SMS Access Service - User Identification Codes - Per User ID Code			A1N	CAMAU		35.08	35.08	27.12	27.12						
		AIN SMS Access Service - Security Card, Per User ID Code, Initial or Replacement			A1N	CAMRC		41.98	41.98	11.74	11.74						
		AIN SMS Access Service - Storage, Per Unit (100 Kilobytes)					0.0027										
		AIN SMS Access Service - Session, Per Minute					0.7121										
		AIN SMS Access Service - Company Performed Session, Per Minute					0.8364										
AIN - BELLSOUTH AIN TOOLKIT SERVICE																	
		AIN Toolkit Service - Service Establishment Charge, Per State, Initial Setup			CAM	BAPSC		39.53	39.53	40.78	40.78						
		AIN Toolkit Service - Training Session, Per Customer				BAPVX		4,211.54	4,211.54	0.00	0.00						
		AIN Toolkit Service - Trigger Access Charge, Per Trigger, Per DN, Term. Attempt				BAPTT		7.85	7.85	9.11	9.11						
		AIN Toolkit Service - Trigger Access Charge, Per Trigger, Per DN, Off-Hook Delay				BAPTD		7.85	7.85	9.11	9.11						
		AIN Toolkit Service - Trigger Access Charge, Per Trigger, Per DN, Off-Hook Immediate				BAPTM		7.85	7.85	9.11	9.11						
		AIN Toolkit Service - Trigger Access Charge, Per Trigger, Per DN, 10-Digit PODP				BAPTO		34.54	34.54	14.39	14.39						
		AIN Toolkit Service - Trigger Access Charge, Per Trigger, Per DN, CDP				BAPTC		34.54	34.54	14.39	14.39						
		AIN Toolkit Service - Trigger Access Charge, Per Trigger, Per DN, Feature Code				BAPTF		34.54	34.54	14.39	14.39						
		AIN Toolkit Service - Query Charge, Per Query					0.0558238										
		AIN Toolkit Service - Type 1 Node Charge, Per AIN Toolkit Subscription, Per Node, Per Query					0.0069214										
		AIN Toolkit Service - SCP Storage Charge, Per SMS Access Account, Per 100 Kilobytes					0.07										
		AIN Toolkit Service - Monthly report - Per AIN Toolkit Service Subscription			CAM	BAPMS	11.87	7.85	7.85	5.52	5.52						
		AIN Toolkit Service - Special Study - Per AIN Toolkit Service Subscription			CAM	BAPLS	3.51	8.68	8.68								
		AIN Toolkit Service - Call Event Report - Per AIN Toolkit Service Subscription			CAM	BAPDS	8.48	7.85	7.85	5.52	5.52						
		AIN Toolkit Service - Call Event Special Study - Per AIN Toolkit Service Subscription			CAM	BAPES	0.12	8.68	8.68								
ENHANCED EXTENDED LINK (EELs)																	
	NOTE: The monthly recurring and non-recurring charges below will apply and the Switch-As-Is Charge will not apply for UNE combinations provisioned as ' Ordinarily Combined' Network Elements.																
	NOTE: The monthly recurring and the Switch-As-Is Charge and not the non-recurring charges below will apply for UNE combinations provisioned as ' Currently Combined' Network Elements.																
	EXTENTED 2-WIRE VOICE GRADE EXTENDED LOOP WITH DEDICATED DS1 INTEROFFICE TRANSPORT																
		First 2-Wire VG Loop (SL2) in Combination - Zone 1		1	UNCVX	UEAL2	16.68	105.98	68.43	53.05	10.61						
		First 2-Wire VG Loop (SL2) in Combination - Zone 2		2	UNCVX	UEAL2	23.13	105.98	68.43	53.05	10.61						
		First 2-Wire VG Loop (SL2) in Combination - Zone 3		3	UNCVX	UEAL2	28.46	105.98	68.43	53.05	10.61						

UNBUNDLED NETWORK ELEMENTS - South Carolina														Attachment: 2		Exhibit: A	
CATEGORY		RATE ELEMENTS	Interim	Zone	BCS	USOC	RATES ($)					Svc Order Submitted Elec per LSR	Svc Order Submitted Manually per LSR	Incremental Charge - Manual Svc Order vs. Electronic-1st	Incremental Charge - Manual Svc Order vs. Electronic-Add'l	Incremental Charge - Manual Svc Order vs. Electronic-Disc 1st	Incremental Charge - Manual Svc Order vs. Electronic-Disc Add'l
							Rec	Nonrecurring		Nonrecurring Disconnect		OSS Rates ($)					
								First	Add'l	First	Add'l	SOMEC	SOMAN	SOMAN	SOMAN	SOMAN	SOMAN
		Interoffice Transport - Dedicated - DS1 combination - Per Mile per month			UNC1X	1L5XX	0.27										
		Interoffice Transport - Dedicated - DS1 combination - Facility Termination per month			UNC1X	U1TF1	61.71	89.47	81.99	16.39	14.48						
		1/0 Channelization System in combination Per Month			UNC1X	MQ1	107.57	91.24	62.71	10.56	9.81						
		Voice Grade COCI - Per Month			UNCVX	1D1VG	0.56	6.59	4.73	0.00	0.00						
		Each Additional 2-Wire VG Loop (SL 2) in Combination - Zone 1		1	UNCVX	UEAL2	16.68	105.98	68.43	53.05	10.61						
		Each Additional 2-Wire VG Loop (SL 2) in Combination - Zone 2		2	UNCVX	UEAL2	23.13	105.98	68.43	53.05	10.61						
		Each Additional 2-Wire VG Loop (SL 2) in Combination - Zone 3		3	UNCVX	UEAL2	28.46	105.98	68.43	53.05	10.61						
		Voice Grade COCI - Per Month			UNCVX	1D1VG	0.56	6.59	4.73	0.00	0.00						
		Nonrecurring Currently Combined Network Elements Switch -As-Is Charge			UNC1X	UNCCC		5.61	5.61	7.00	7.00						
	EXTENDED 4-WIRE VOICE GRADE EXTENDED LOOP WITH DEDICATED DS1 INTEROFFICE TRANSPORT																
		First 4-Wire Analog Voice Grade Loop in Combination - Zone 1		1	UNCVX	UEAL4	32.59	132.38	94.83	59.35	14.61						
		First 4-Wire Analog Voice Grade Loop in Combination - Zone 2		2	UNCVX	UEAL4	43.89	132.38	94.83	59.35	14.61						
		First 4-Wire Analog Voice Grade Loop in Combination - Zone 3		3	UNCVX	UEAL4	43.38	132.38	94.83	59.35	14.61						
		Interoffice Transport - Dedicated - DS1 combination - Per Mile Per Month			UNC1X	1L5XX	0.27										
		Interoffice Transport - Dedicated - DS1 - Facility Termination Per Month			UNC1X	U1TF1	61.71	89.47	81.99	16.39	14.48						
		1/0 Channel System in combination Per Month			UNC1X	MQ1	107.57	91.24	62.71	10.56	9.81						
		Voice Grade COCI in combination - per month			UNCVX	1D1VG	0.56	6.59	4.73	0.00	0.00						
		Additional 4-Wire Analog Voice Grade Loop in same DS1 Interoffice Transport Combination - Zone 1		1	UNCVX	UEAL4	32.59	132.38	94.83	59.35	14.61						
		Additional 4-Wire Analog Voice Grade Loop in same DS1 Interoffice Transport Combination - Zone 2		2	UNCVX	UEAL4	43.89	132.38	94.83	59.35	14.61						
		Additional 4-Wire Analog Voice Grade Loop in same DS1 Interoffice Transport Combination - Zone 3		3	UNCVX	UEAL4	43.38	132.38	94.83	59.35	14.61						
		Additional Voice Grade COCI in combination - per month			UNCVX	1D1VG	0.56	6.59	4.73	0.00	0.00						
		Nonrecurring Currently Combined Network Elements Switch -As-Is Charge			UNC1X	UNCCC		5.61	5.61	7.00	7.00						
	EXTENDED 4-WIRE 56 KBPS EXTENDED DIGITAL LOOP WITH DEDICATED DS1 INTEROFFICE TRANSPORT																
		First 4-Wire 56Kbps Digital Grade Loop in Combination - Zone 1		1	UNCDX	UDL56	29.93	126.66	89.12	59.35	14.61						
		First 4-Wire 56Kbps Digital Grade Loop in Combination - Zone 2		2	UNCDX	UDL56	33.99	126.66	89.12	59.35	14.61						
		First 4-Wire 56Kbps Digital Grade Loop in Combination - Zone 3		3	UNCDX	UDL56	34.74	126.66	89.12	59.35	14.61						
		Interoffice Transport - Dedicated - DS1 combination - Per Mile Per Month			UNC1X	1L5XX	0.27										
		Interoffice Transport - Dedicated - DS1 - combination Facility Termination Per Month			UNC1X	U1TF1	61.71	89.47	81.99	16.39	14.48						
		1/0 Channel System in combination Per Month			UNC1X	MQ1	107.57	91.24	62.71	10.56	9.81						
		OCU-DP COCI (data) per month (2.4-64kbs)			UNCDX	1D1DD	1.19	6.59	4.73	0.00	0.00						
		Additional 4-Wire 56Kbps Digital Grade Loop in same DS1 Interoffice Transport Combination - Zone 1		1	UNCDX	UDL56	29.93	126.66	89.12	59.35	14.61						
		Additional 4-Wire 56Kbps Digital Grade Loop in same DS1 Interoffice Transport Combination - Zone 2		2	UNCDX	UDL56	33.99	126.66	89.12	59.35	14.61						
		Additional 4-Wire 56Kbps Digital Grade Loop in same DS1 Interoffice Transport Combination - Zone 3		3	UNCDX	UDL56	34.74	126.66	89.12	59.35	14.61						
		Additional OCU-DP COCI (data) - in combination per month (2.4-64kbs)			UNCDX	1D1DD	1.19	6.59	4.73	0.00	0.00						

CATEGORY	RATE ELEMENTS	Interim	Zone	BCS	USOC	RATES ($)					Svc Order Submitted Elec per LSR	Svc Order Submitted Manually per LSR	Attachment: 2 Incremental Charge - Manual Svc Order vs. Electronic-1st	Attachment: 2 Incremental Charge - Manual Svc Order vs. Electronic-Add'l	Exhibit: A Incremental Charge - Manual Svc Order vs. Electronic-Disc 1st	Exhibit: A Incremental Charge - Manual Svc Order vs. Electronic-Disc Add'l
						Rec	Nonrecurring		Nonrecurring Disconnect		OSS Rates ($)					
							First	Add'l	First	Add'l	SOMEC	SOMAN	SOMAN	SOMAN	SOMAN	SOMAN
	Nonrecurring Currently Combined Network Elements Switch -As-Is Charge			UNC1X	UNCCC		5.61	5.61	7.00	7.00						
	EXTENDED 4-WIRE 64 KBPS EXTENDED DIGITAL LOOP WITH DEDICATED DS1 INTEROFFICE TRANSPORT															
	First 4-Wire 64Kbps Digital Grade Loop in Combination - Zone 1		1	UNCDX	UDL64	29.93	126.66	89.12	59.35	14.61						
	First 4-Wire 64Kbps Digital Grade Loop in Combination - Zone 2		2	UNCDX	UDL64	33.99	126.66	89.12	59.35	14.61						
	First 4-Wire 64Kbps Digital Grade Loop in Combination - Zone 3		3	UNCDX	UDL64	34.74	126.66	89.12	59.35	14.61						
	Interoffice Transport - Dedicated - DS1 combination - Per Mile Per Month			UNC1X	1L5XX	0.27										
	interoffice Transport - Dedicated - DS1 combination - Facility Termination Per Month			UNC1X	U1TF1	61.71	89.47	81.99	16.39	14.48						
	1/0 Channel System in combination Per Month			UNC1X	MQ1	107.57	91.24	62.71	10.56	9.81						
	OCU-DP COCI (data) - in combination - per month (2.4-64kbs)			UNCDX	1D1DD	1.19	6.59	4.73	0.00	0.00						
	Additional 4-Wire 64Kbps Digital Grade Loop in same DS1 Interoffice Transport Combination - Zone 1		1	UNCDX	UDL64	29.93	126.66	89.12	59.35	14.61						
	Additional 4-Wire 64Kbps Digital Grade Loop in same DS1 Interoffice Transport Combination - Zone 2		2	UNCDX	UDL64	33.99	126.66	89.12	59.35	14.61						
	Additional 4-Wire 64Kbps Digital Grade Loop in same DS1 Interoffice Transport Combination - Zone 3		3	UNCDX	UDL64	34.74	126.66	89.12	59.35	14.61						
	Additional OCU-DP COCI (data) - in combination - per month (2.4-64kbs)			UNCDX	1D1DD	1.19	6.59	4.73	0.00	0.00						
	Nonrecurring Currently Combined Network Elements Switch -As-Is Charge			UNC1X	UNCCC		5.61	5.61	7.00	7.00						
	EXTENDED 4-WIRE DS1 DIGITAL EXTENDED LOOP WITH DEDICATED DS1 INTEROFFICE TRANSPORT															
	4-Wire DS1 Digital Loop in Combination - Zone 1		1	UNC1X	USLXX	90.87	253.03	157.89	44.80	11.73						
	4-Wire DS1 Digital Loop in Combination - Zone 2		2	UNC1X	USLXX	155.43	253.03	157.89	44.80	11.73						
	4-Wire DS1 Digital Loop in Combination - Zone 3		3	UNC1X	USLXX	261.89	253.03	157.89	44.80	11.73						
	Interoffice Transport - Dedicated - DS1 combination - Per Mile Per Month			UNC1X	1L5XX	0.27										
	Interoffice Transport - Dedicated - DS1 combination - Facility Termination Per Month			UNC1X	U1TF1	61.71	89.47	81.99	16.39	14.48						
	Nonrecurring Currently Combined Network Elements Switch -As-Is Charge			UNC1X	UNCCC		5.61	5.61	7.00	7.00						
	EXTENDED 4-WIRE DS1 DIGITAL EXTENDED LOOP WITH DEDICATED DS3 INTEROFFICE TRANSPORT															
	First DS1Loop in Combination - Zone 1		1	UNC1X	USLXX	90.87	253.03	157.89	44.80	11.73						
	First DS1Loop in Combination - Zone 2		2	UNC1X	USLXX	155.43	253.03	157.89	44.80	11.73						
	First DS1Loop in Combination - Zone 3		3	UNC1X	USLXX	261.89	253.03	157.89	44.80	11.73						
	Interoffice Transport - Dedicated - DS3 combination - Per Mile Per Month			UNC3X	1L5XX	6.42										
	Interoffice Transport - Dedicated - DS3 - Facility Termination per month			UNC3X	U1TF3	704.52	279.37	163.12	60.33	58.59						
	3/1Channel System in combination per month			UNC3X	MQ3	144.02	178.54	94.18	33.33	31.90						
	DS1 COCI in combination per month			UNC1X	UC1D1	8.64	6.59	4.73	0.00	0.00						
	Additional DS1Loop in DS3 Interoffice Transport Combination - Zone 1		1	UNC1X	USLXX	90.87	253.03	157.89	44.80	11.73						
	Additional DS1Loop in DS3 Interoffice Transport Combination - Zone 2		2	UNC1X	USLXX	155.43	253.03	157.89	44.80	11.73						
	Additional DS1Loop in DS3 Interoffice Transport Combination - Zone 3		3	UNC1X	USLXX	261.89	253.03	157.89	44.80	11.73						
	Additoinal DS1 COCI in combination per month			UNC1X	UC1D1	8.64	6.59	4.73	0.00	0.00						
	Nonrecurring Currently Combined Network Elements Switch -As-Is Charge			UNC3X	UNCCC		5.61	5.61	7.00	7.00						
	EXTENDED 4-WIRE VOICE GRADE EXTENDED LOOP/ 4 WIRE VOICE GRADE INTEROFFICE TRANSPORT															
	2-WireVG Loop in combination - Zone 1		1	UNCVX	UEAL2	16.68	105.98	68.43	53.05	10.61						
	2-WireVG Loop in combination - Zone 2		2	UNCVX	UEAL2	23.13	105.98	68.43	53.05	10.61						
	2-WireVG Loop in combination - Zone 3		3	UNCVX	UEAL2	28.46	105.98	68.43	53.05	10.61						

CATEGORY	RATE ELEMENTS	Interim	Zone	BCS	USOC	RATES ($)					Svc Order Submitted Elec per LSR	Svc Order Submitted Manually per LSR	Attachment: 2 Incremental Charge - Manual Svc Order vs. Electronic-1st	Attachment: 2 Incremental Charge - Manual Svc Order vs. Electronic-Add'l	Exhibit: A Incremental Charge - Manual Svc Order vs. Electronic-Disc 1st	Exhibit: A Incremental Charge - Manual Svc Order vs. Electronic-Disc Add'l
						Rec	Nonrecurring		Nonrecurring Disconnect		OSS Rates ($)					
							First	Add'l	First	Add'l	SOMEC	SOMAN	SOMAN	SOMAN	SOMAN	SOMAN
	Interoffice Transport - 2-wire VG - Dedicated- Per Mile Per Month			UNCVX	1L5XX	0.0134										
	Interoffice Transport - 2-wire VG - Dedicated - Facility Termination per month			UNCVX	U1TV2	19.44	40.63	27.47	16.77	6.91						
	Nonrecurring Currently Combined Network Elements Switch -As-Is Charge			UNCVX	UNCCC		5.61	5.61	7.00	7.00						
	EXTENDED 4-WIRE VOICE GRADE EXTENDED LOOP/ 4 WIRE VOICE GRADE INTEROFFICE TRANSPORT															
	4-WireVG Loop in combination - Zone 1		1	UNCVX	UEAL4	32.59	132.38	94.83	59.35	14.61						
	4-WireVG Loop in combination - Zone 2		2	UNCVX	UEAL4	43.89	132.38	94.83	59.35	14.61						
	4-WireVG Loop in combination - Zone 3		3	UNCVX	UEAL4	43.38	132.38	94.83	59.35	14.61						
	Interoffice Transport - 4-wire VG - Dedicated - Per Mile Per Month			UNCVX	1L5XX	0.0134										
	Interoffice Transport - 4-wire VG - Dedicated - Facility Termination per month			UNCVX	U1TV4	17.03	40.63	27.47	16.77	6.91						
	Nonrecurring Currently Combined Network Elements Switch -As-Is Charge			UNCVX	UNCCC		5.61	5.61	7.00	7.00						
	EXTENDED DS3 DIGITAL EXTENDED LOOP WITH DEDICATED DS3 INTEROFFICE TRANSPORT															
	DS3 Local Loop in combination - per mile per month			UNC3X	1L5ND	12.26										
	DS3 Local Loop in combination - Facility Termination per month			UNC3X	UE3PX	306.36	452.52	264.53	119.75	83.77						
	Interoffice Transport - Dedicated - DS3 - Per Mile per month			UNC3X	1L5XX	6.42										
	Interoffice Transport - Dedicated - DS3 combination - Facility Termination per month			UNC3X	U1TF3	704.52	279.37	163.12	60.33	58.59						
	Nonrecurring Currently Combined Network Elements Switch -As-Is Charge			UNC3X	UNCCC		5.61	5.61	7.00	7.00						
	EXTENDED STS-1 DIGITAL EXTENDED LOOP WITH DEDICATED STS-1 INTEROFFICE TRANSPORT															
	STS-1 Local Lolp in combination - per mile per month			UNCSX	1L5ND	12.26										
	STS-1 Local Loop in combination - Facility Termination per month			UNCSX	UDLS1	313.49	452.52	264.53	119.75	83.77						
	Interoffice Transport - Dedicated - STS-1 combination - per mile per month			UNCSX	1L5XX	6.42										
	Interoffice Transport - Dedicated - STS-1 combination - Facility Termination per month			UNCSX	U1TFS	704.44	279.37	163.12	60.33	58.59						
	Nonrecurring Currently Combined Network Elements Switch -As-Is Charge			UNCSX	UNCCC		5.61	5.61	7.00	7.00						
	EXTENDED 2-WIRE ISDN EXTENDED LOOP WITH DS1 INTEROFFICE TRANSPORT															
	First 2-Wire ISDN Loop in Combination - Zone 1		1	UNCNX	U1L2X	25.21	117.58	80.03	53.05	10.61						
	First 2-Wire ISDN Loop in Combination - Zone 2		2	UNCNX	U1L2X	32.76	117.58	80.03	53.05	10.61						
	First 2-Wire ISDN Loop in Combination - Zone 3		3	UNCNX	U1L2X	37.70	117.58	80.03	53.05	10.61						
	Interoffice Transport - Dedicated - DS1 combination - per mile per month			UNC1X	1L5XX	0.27										
	Interoffice Transport - Dedicated - DS1 combination - Facility Termination per month			UNC1X	U1TF1	61.71	89.47	81.99	16.39	14.48						
	1/0 Channel System in combination - per month			UNC1X	MQ1	107.57	91.24	62.71	10.56	9.81						
	2-wire ISDN COCI (BRITE) - in combination - per month			UNCNX	UC1CA	2.56	6.59	4.73	0.00	0.00						
	Additional 2-wire ISDN Loop in same DS1Interoffice Transport Combination - Zone 1		1	UNCNX	U1L2X	25.21	117.58	80.03	53.05	10.61						
	Additional 2-wire ISDN Loop in same DS1Interoffice Transport Combination - Zone 2		2	UNCNX	U1L2X	32.76	117.58	80.03	53.05	10.61						
	Additional 2-wire ISDN Loop in same DS1Interoffice Transport Combination - Zone 3		3	UNCNX	U1L2X	37.70	117.58	80.03	53.05	10.61						
	Additional 2-wire ISDN COCI (BRITE) - in combination- per month			UNCNX	UC1CA	2.56	6.59	4.73	0.00	0.00						
	Nonrecurring Currently Combined Network Elements Switch -As-Is Charge			UNC1X	UNCCC		5.61	5.61	7.00	7.00						
	EXTENDED 4-WIRE DS1 DIGITAL EXTENDED LOOP WITH DEDICATED STS-1 INTEROFFICE TRANSPORT															
	First DS1 Loop Combination - Zone 1		1	UNC1X	USLXX	90.87	253.03	157.89	44.80	11.73						
	First DS1 Loop Combination - Zone 2		2	UNC1X	USLXX	155.43	253.03	157.89	44.80	11.73						
	First DS1 Loop Combination - Zone 3		3	UNC1X	USLXX	261.89	253.03	157.89	44.80	11.73						

UNBUNDLED NETWORK ELEMENTS - South Carolina

CATEGORY	RATE ELEMENTS	Interim	Zone	BCS	USOC	RATES ($)					Svc Order Submitted Elec per LSR	Svc Order Submitted Manually per LSR	Attachment: 2		Exhibit: A	
													Incremental Charge - Manual Svc Order vs. Electronic-1st	Incremental Charge - Manual Svc Order vs. Electronic-Add'l	Incremental Charge - Manual Svc Order vs. Electronic-Disc 1st	Incremental Charge - Manual Svc Order vs. Electronic-Disc Add'l
						Rec	Nonrecurring		Nonrecurring Disconnect		OSS Rates ($)					
							First	Add'l	First	Add'l	SOMEC	SOMAN	SOMAN	SOMAN	SOMAN	SOMAN
	Interoffice Transport - Dedicated - STS-1 combination - Per Mile Per Month			UNCSX	1L5XX	6.42										
	Interoffice Transport - Dedicated - STS-1 combination - Facility Termination per month			UNCSX	U1TFS	704.44	279.37	163.12	60.33	58.59						
	3/1 Channel System in combination per month			UNCSX	MQ3	144.02	178.54	94.18	33.33	31.90						
	DS1 COCI in combination per month			UNC1X	UC1D1	8.64	6.59	4.73	0.00	0.00						
	Additional DS1Loop in the same STS-1 Interoffice Transport Combination - Zone 1		1	UNC1X	USLXX	90.87	253.03	157.89	44.80	11.73						
	Additional DS1Loop in the same STS-1 Interoffice Transport Combination - Zone 2		2	UNC1X	USLXX	155.43	253.03	157.89	44.80	11.73						
	Additional DS1Loop in the same STS-1 Interoffice Transport Combination - Zone 3		3	UNC1X	USLXX	261.89	253.03	157.89	44.80	11.73						
	DS1 COCI in combination per month			UNC1X	UC1D1	8.64	6.59	4.73	0.00	0.00						
	Nonrecurring Currently Combined Network Elements Switch -As-Is Charge			UNCSX	UNCCC		5.61	5.61	7.00	7.00						
	EXTENDED 4-WIRE 56 KBPS DIGITAL EXTENDED LOOP WITH 56 KBPS INTEROFFICE TRANSPORT															
	4-wire 56 kbps Local Loop in combination - Zone 1		1	UNCDX	UDL56	29.93	126.66	89.12	59.35	14.61						
	4-wire 56 kbps Local Loop in combination - Zone 2		2	UNCDX	UDL56	33.99	126.66	89.12	59.35	14.61						
	4-wire 56 kbps Local Loop in combination - Zone 3		3	UNCDX	UDL56	34.74	126.66	89.12	59.35	14.61						
	Interoffice Transport - Dedicated - 4-wire 56 kbps combination - Per Mile per month			UNCDX	1L5XX	0.0134										
	Interoffice Transport - Dedicated - 4-wire 56 kbps combination - Facility Termination per month			UNCDX	U1TD5	13.41	40.63	27.47	16.77	6.91						
	Nonrecurring Currently Combined Network Elements Switch -As-Is Charge			UNCDX	UNCCC		5.61	5.61	7.00	7.00						
	EXTENDED 4-WIRE 64 KBPS DIGITAL EXTENDED LOOP WITH 64 KBPS INTEROFFICE TRANSPORT															
	4-wire 64 kbps Lcoal Loop in Combination - Zone 1		1	UNCDX	UDL64	29.93	126.66	89.12	59.35	14.61						
	4-wire 64 kbps Lcoal Loop in Combination - Zone 2		2	UNCDX	UDL64	33.99	126.66	89.12	59.35	14.61						
	4-wire 64 kbps Lcoal Loop in Combination - Zone 3		3	UNCDX	UDL64	34.74	126.66	89.12	59.35	14.61						
	Interoffice Transport - Dedicated - 4-wire 64 kbps combination - Per Mile per month			UNCDX	1L5XX	0.0134										
	Interoffice Transport - Dedicated - 4-wire 64 kbps combination - Facility Termination per month			UNCDX	U1TD6	13.41	40.63	27.47	16.77	6.91						
	Nonrecurring Currently Combined Network Elements Switch -As-Is Charge			UNCDX	UNCCC		5.61	5.61	7.00	7.00						
	EXTENDED 2-WIRE VOICE GRADE LOOP WITH DS1 INTEROFFICE TRANSPORT w/ 3/1 MUX															
	First 2-wire VG Loop (SL2) in Combination - Zone 1		1	UNCVX	UEAL2	16.68	105.98	68.43	53.05	10.61						
	First 2-wire VG Loop (SL2) in Combination - Zone 2		2	UNCVX	UEAL2	23.13	105.98	68.43	53.05	10.61						
	First 2-wire VG Loop (SL2) in Combination - Zone 3		3	UNCVX	UEAL2	28.46	105.98	68.43	53.05	10.61						
	First Interoffice Transport - Dedicated - DS1 combination - Per Mile			UNC1X	1L5XX	0.27										
	First Interoffice Transport - Dedicated - DS1 combination - Facility Termination per month			UNC1X	U1TF1	61.71	89.47	81.99	16.39	14.48						
	Per each DS1 Channelization System Per Month			UNC1X	MQ1	107.57	91.24	62.71	10.56	9.81						
	Per each Voice Grade COCI - Per Month per month			UNCVX	1D1VG	0.56	6.59	4.73	0.00	0.00						
	3/1 Channel System in combination per month			UNC3X	MQ3	144.02	178.54	94.18	33.33	31.90						
	Per each DS1 COCI in combination per month			UNC1X	UC1D1	8.64	6.59	4.73	0.00	0.00						
	Each Additional 2-Wire VG Loop(SL 2) in the same DS1 Interoffice Transport Combination - Zone 1		1	UNCVX	UEAL2	16.68	105.98	68.43	53.05	10.61						
	Each Additional 2-Wire VG Loop(SL2) in the same DS1 Interoffice Transport Combination - Zone 2		2	UNCVX	UEAL2	23.13	105.98	68.43	53.05	10.61						
	Each Additional 2-Wire VG Loop(SL2) in the same DS1 Interoffice Transport Combination - Zone 3		3	UNCVX	UEAL2	28.46	105.98	68.43	53.05	10.61						
	Each Additional Voice Grade COCI in combination - per month			UNCVX	1D1VG	0.56	6.59	4.73	0.00	0.00						
	Each Additional DS1 Interoffice Channel per mile in same 3/1 Channel System per month			UNC1X	1L5XX	0.27										
	Each Additional DS1 Interoffice Channel Facility Termination in same 3/1 Channel System per month			UNC1X	U1TF1	61.71	89.47	81.99	16.39	14.48						
	Each Additional DS1 COCI combination per month			UNC1X	UC1D1	8.64	6.59	4.73	0.00	0.00						

CATEGORY	RATE ELEMENTS	Interim	Zone	BCS	USOC	RATES ($)					Svc Order Submitted Elec per LSR	Svc Order Submitted Manually per LSR	Attachment: 2 Incremental Charge - Manual Svc Order vs. Electronic-1st	Attachment: 2 Incremental Charge - Manual Svc Order vs. Electronic-Add'l	Exhibit: A Incremental Charge - Manual Svc Order vs. Electronic-Disc 1st	Exhibit: A Incremental Charge - Manual Svc Order vs. Electronic-Disc Add'l
						Rec	Nonrecurring		Nonrecurring Disconnect		OSS Rates ($)					
							First	Add'l	First	Add'l	SOMEC	SOMAN	SOMAN	SOMAN	SOMAN	SOMAN
	Nonrecurring Currently Combined Network Elements Switch -As-Is Charge			UNC1X	UNCCC		5.61	5.61	7.00	7.00						
	EXTENDED 4-WIRE 56 KBPS DIGITAL LOOP WITH DEDICATED DS1 INTEROFFICE TRANSPORT w/ 3/1 MUX															
	First 4-Wire Analog Voice Grade Local Loop in Combination - Zone 1		1	UNCVX	UEAL4	32.59	132.38	94.83	59.35	14.61						
	First 4-Wire Analog Voice Grade Local Loop in Combination - Zone 2		2	UNCVX	UEAL4	43.89	132.38	94.83	59.35	14.61						
	First 4-Wire Analog Voice Grade Local Loop in Combination - Zone 3		3	UNCVX	UEAL4	43.38	132.38	94.83	59.35	14.61						
	First Interoffice Transport - Dedicated - DS1 combination - Per Mile Per Month			UNC1X	1L5XX	0.27										
	First Interoffice Transport - Dedicated - DS1 - Facility Termination Per Month			UNC1X	U1TF1	61.71	89.47	81.99	16.39	14.48						
	Per each 1/0 Channel System in combination Per Month			UNC1X	MQ1	107.57	91.24	62.71	10.56	9.81						
	Per each Voice Grade COCI in combination - per month			UNCVX	1D1VG	0.56	6.59	4.73	0.00	0.00						
	3/1 Channel System in combination per month			UNC3X	MQ3	144.02	178.54	94.18	33.33	31.90						
	Per each DS1 COCI in combination per month			UNC1X	UC1D1	8.64	6.59	4.73	0.00	0.00						
	Additional 4-Wire Analog Voice Grade Loop in same DS1 Interoffice Transport Combination - Zone 1		1	UNCVX	UEAL4	32.59	132.38	94.83	59.35	14.61						
	Additional 4-Wire Analog Voice Grade Loop in same DS1 Interoffice Transport Combination - Zone 2		2	UNCVX	UEAL4	43.89	132.38	94.83	59.35	14.61						
	Additional 4-Wire Analog Voice Grade Loop in same DS1 Interoffice Transport Combination - Zone 3		3	UNCVX	UEAL4	43.38	132.38	94.83	59.35	14.61						
	Each Additional DS1 Interoffice Channel per mile in same 3/1 Channel System per month			UNC1X	1L5XX	0.27										
	Each Additional DS1 Interoffice Channel Facility Termination in same 3/1 Channel System per month			UNC1X	U1TF1	61.71	89.47	81.99	16.39	14.48						
	Additional Voice Grade COCI - in combination - per month			UNCVX	1D1VG	0.56	6.59	4.73	0.00	0.00						
	Nonrecurring Currently Combined Network Elements Switch -As-Is Charge			UNC1X	UNCCC		5.61	5.61	7.00	7.00						
	EXTENDED 4-WIRE 56 KBPS DIGITAL LOOP WITH DEDICATED DS1 INTEROFFICE TRANSPORT w/ 3/1 MUX															
	First 4-Wire 56Kbps Digital Grade Local Loop in Combination - Zone 1		1	UNCDX	UDL56	29.93	126.66	89.12	59.35	14.61						
	First 4-Wire 56Kbps Digital Grade Local Loop in Combination - Zone 2		2	UNCDX	UDL56	33.99	126.66	89.12	59.35	14.61						
	First 4-Wire 56Kbps Digital Grade Local Loop in Combination - Zone 3		3	UNCDX	UDL56	34.74	126.66	89.12	59.35	14.61						
	First Interoffice Transport - Dedicated - DS1 combination - Per Mile Per Month			UNC1X	1L5XX	0.27										
	First Interoffice Transport - Dedicated - DS1 - combination Facility Termination Per Month			UNC1X	U1TF1	61.71	89.47	81.99	16.39	14.48						
	Per each 1/0 Channel System in combination Per Month			UNC1X	MQ1	107.57	91.24	62.71	10.56	9.81						
	Per each OCU-DP COCI (data) COCI per month (2.4-64kbs)			UNCDX	1D1DD	1.19	6.59	4.73	0.00	0.00						
	3/1 Channel System in combination per month			UNC3X	MQ3	144.02	178.54	94.18	33.33	31.90						
	Per each DS1 COCI in combination per month			UNC1X	UC1D1	8.64	6.59	4.73	0.00	0.00						
	Additional 4-Wire 56Kbps Digital Grade Loop in same DS1 Interoffice Transport Combination - Zone 1		1	UNCDX	UDL56	29.93	126.66	89.12	59.35	14.61						
	Additional 4-Wire 56Kbps Digital Grade Loop in same DS1 Interoffice Transport Combination - Zone 2		2	UNCDX	UDL56	33.99	126.66	89.12	59.35	14.61						
	Additional 4-Wire 56Kbps Digital Grade Loop in same DS1 Interoffice Transport Combination - Zone 3		3	UNCDX	UDL56	34.74	126.66	89.12	59.35	14.61						
	OCU-DP COCI (data) COCI in combination per month (2.4-64kbs)			UNCDX	1D1DD	1.19	6.59	4.73	0.00	0.00						
	Each Additional DS1 Interoffice Channel per mile in same 3/1 Channel System per month			UNC1X	1L5XX	0.27										
	Each Additional DS1 Interoffice Channel Facility Termination in same 3/1 Channel System per month			UNC1X	U1TF1	61.71	89.47	81.99	16.39	14.48						
	Each Additional DS1 COCI in the same 3/1 channel system combination per month			UNC1X	UC1D1	8.64	6.59	4.73	0.00	0.00						

CATEGORY	RATE ELEMENTS	Interim	Zone	BCS	USOC	RATES ($)					Svc Order Submitted Elec per LSR	Svc Order Submitted Manually per LSR	Attachment: 2 Incremental Charge - Manual Svc Order vs. Electronic-1st	Attachment: 2 Incremental Charge - Manual Svc Order vs. Electronic-Add'l	Exhibit: A Incremental Charge - Manual Svc Order vs. Electronic-Disc 1st	Exhibit: A Incremental Charge - Manual Svc Order vs. Electronic-Disc Add'l
						Rec	Nonrecurring		Nonrecurring Disconnect		OSS Rates ($)					
							First	Add'l	First	Add'l	SOMEC	SOMAN	SOMAN	SOMAN	SOMAN	SOMAN
	Nonrecurring Currently Combined Network Elements Switch -As-Is Charge			UNC1X	UNCCC		5.61	5.61	7.00	7.00						
	EXTENDED 4-WIRE 64 KBPS DIGITAL LOOP WITH DEDICATED DS1 INTEROFFICE TRANSPORT w/ 3/1 MUX															
	First 4-Wire 64Kbps Digital Grade Loop in a DS1 Interoffice Transport Combination - Zone 1		1	UNCDX	UDL64	29.93	126.66	89.12	59.35	14.61						
	First 4-Wire 64Kbps Digital Grade Loop in a DS1 Interoffice Transport Combination - Zone 2		2	UNCDX	UDL64	33.99	126.66	89.12	59.35	14.61						
	First 4-Wire 64Kbps Digital Grade Loop in a DS1 Interoffice Transport Combination - Zone 3		3	UNCDX	UDL64	34.74	126.66	89.12	59.35	14.61						
	First Interoffice Transport - Dedicated - DS1 combination - Per Mile Per Month			UNC1X	1L5XX	0.27										
	First Interoffice Transport - Dedicated - DS1 combination - Facility Termination Per Month			UNC1X	U1TF1	61.71	89.47	81.99	16.39	14.48						
	Per each Channel System 1/0 in combination Per Month			UNC1X	MQ1	107.57	91.24	62.71	10.56	9.81						
	Per each OCU-DP COCI (data) in combination - per month (2.4-64kbs)			UNCDX	1D1DD	1.19	6.59	4.73	0.00	0.00						
	3/1 Channel System in combination per month			UNC3X	MQ3	144.02	178.54	94.18	33.33	31.90						
	Per each DS1 COCI in combination per month			UNC1X	UC1D1	8.64	6.59	4.73	0.00	0.00						
	Additional 4-Wire 64Kbps Digital Grade Loop in same DS1 Interoffice Transport Combination - Zone 1		1	UNCDX	UDL64	29.93	126.66	89.12	59.35	14.61						
	Additional 4-Wire 64Kbps Digital Grade Loop in same DS1 Interoffice Transport Combination - Zone 2		2	UNCDX	UDL64	33.99	126.66	89.12	59.35	14.61						
	Additional 4-Wire 64Kbps Digital Grade Loop in same DS1 Interoffice Transport Combination - Zone 3		3	UNCDX	UDL64	34.74	126.66	89.12	59.35	14.61						
	Additional OCU-DP COCI (data) - DS1 to DS0 Channel System combination - per month (2.4-64kbs)			UNCDX	1D1DD	1.19	6.59	4.73	0.00	0.00						
	Each Additional DS1 Interoffice Channel per mile in same 3/1 Channel System per month			UNC1X	1L5XX	0.27										
	Each Additional DS1 Interoffice Channel Facility Termination in same 3/1 Channel System per month			UNC1X	U1TF1	61.71	89.47	81.99	16.39	14.48						
	Each Additional DS1 COCI in the same 3/1 channel system combination per month			UNC1X	UC1D1	8.64	6.59	4.73	0.00	0.00						
	Nonrecurring Currently Combined Network Elements Switch -As-Is Charge			UNC1X	UNCCC		5.61	5.61	7.00	7.00						
	EXTENDED 2-WIRE ISDN LOOP WITH DS1 INTEROFFICE TRANSPORT w/ 3/1 MUX															
	First 2-Wire ISDN Loop in a DS1 Interoffice Combination Transport - Zone 1		1	UNCNX	U1L2X	25.21	117.58	80.03	53.05	10.61						
	First 2-Wire ISDN Loop in a DS1 Interoffice Combination Transport - Zone 2		2	UNCNX	U1L2X	32.76	117.58	80.03	53.05	10.61						
	First 2-Wire ISDN Loop in a DS1 Interoffice Combination Transport - Zone 3		3	UNCNX	U1L2X	37.70	117.58	80.03	53.05	10.61						
	First Interoffice Transport - Dedicated - DS1 combination - Per Mile per month			UNC1X	1L5XX	0.27										
	First Interoffice Transport - Dedicated - DS1 combination - Facility Termination per month			UNC1X	U1TF1	61.71	89.47	81.99	16.39	14.48						
	Per each Channel System 1/0 in combination - per month			UNC1X	MQ1	107.57	91.24	62.71	10.56	9.81						
	Per each 2-wire ISDN COCI (BRITE) in combination - per month			UNCNX	UC1CA	2.56	6.59	4.73	0.00	0.00						
	3/1 Channel System in combination per month			UNC3X	MQ3	144.02	178.54	94.18	33.33	31.90						
	Per each DS1 COCI in combination per month			UNC1X	UC1D1	8.64	6.59	4.73	0.00	0.00						
	Additional 2-wire ISDN Loop in same DS1Interoffice Transport Combination - Zone 1		1	UNCNX	U1L2X	25.21	117.58	80.03	53.05	10.61						
	Additional 2-wire ISDN Loop in same DS1Interoffice Transport Combination - Zone 2		2	UNCNX	U1L2X	32.76	117.58	80.03	53.05	10.61						
	Additional 2-wire ISDN Loop in same DS1Interoffice Transport Combination - Zone 3		3	UNCNX	U1L2X	37.70	117.58	80.03	53.05	10.61						
	Additional 2-wire ISDN COCI (BRITE) in same 1/0 channel system combination- per month			UNCNX	UC1CA	2.56	6.59	4.73	0.00	0.00						

UNBUNDLED NETWORK ELEMENTS - South Carolina														Attachment: 2		Exhibit: A	
CATEGORY		RATE ELEMENTS	Interim	Zone	BCS	USOC	RATES ($)					Svc Order Submitted Elec per LSR	Svc Order Submitted Manually per LSR	Incremental Charge - Manual Svc Order vs. Electronic-1st	Incremental Charge - Manual Svc Order vs. Electronic-Add'l	Incremental Charge - Manual Svc Order vs. Electronic-Disc 1st	Incremental Charge - Manual Svc Order vs. Electronic-Disc Add'l
							Rec	Nonrecurring		Nonrecurring Disconnect		OSS Rates ($)					
								First	Add'l	First	Add'l	SOMEC	SOMAN	SOMAN	SOMAN	SOMAN	SOMAN
		Each Additional DS1 Interoffice Channel per mile in same 3/1 Channel System per month			UNC1X	1L5XX	0.27										
		Each Additional DS1 Interoffice Channel Facility Termination in same 3/1 Channel System per month			UNC1X	U1TF1	61.71	89.47	81.99	16.39	14.48						
		Each Additional DS1 COCI in the same 3/1 channel system combination per month			UNC1X	UC1D1	8.64	6.59	4.73	0.00	0.00						
		Nonrecurring Currently Combined Network Elements Switch -As-Is Charge			UNC1X	UNCCC		5.61	5.61	7.00	7.00						
	EXTENDED 4-WIRE DS1 LOOP WITH DEDICATED DS1 INTEROFFICE TRANSPORT w/ 3/1 MUX																
		First 4-wire DS1 Digital Lcoal Loop in Combination - Zone 1		1	UNC1X	USLXX	90.87	253.03	157.89	44.80	11.73						
		First 4-wire DS1 Digital Lcoal Loop in Combination - Zone 2		2	UNC1X	USLXX	155.43	253.03	157.89	44.80	11.73						
		First 4-wire DS1 Digital Lcoal Loop in Combination - Zone 3		3	UNC1X	USLXX	261.89	253.03	157.89	44.80	11.73						
		First Interoffice Transport - Dedicated - DS1 combination - Per Mile Per Month			UNC1X	1L5XX	0.27										
		First Interoffice Transport - Dedicated - DS1 combination - Facility Termination Per Month			UNC1X	U1TF1	61.71	89.47	81.99	16.39	14.48						
		3/1 Channel System in combination per month			UNC3X	MQ3	144.02	178.54	94.18	33.33	31.90						
		Per each DS1 COCI combination per month			UNC1X	UC1D1	8.64	6.59	4.73	0.00	0.00						
		Each Additional DS1 Interoffice Channel per mile in same 3/1 Channel System per month			UNC1X	1L5XX	0.27										
		Each Additional DS1 Interoffice Channel Facility Termination in same 3/1 Channel System per month			UNC1X	U1TF1	61.71	89.47	81.99	16.39	14.48						
		Each Additional DS1 COCI in the same 3/1 channel system combination per month			UNC1X	UC1D1	8.64	6.59	4.73	0.00	0.00						
		Additional 4-Wire DS1 Digital Local Loop in Combination - Zone 1		1	UNC1X	USLXX	90.87	253.03	157.89	44.80	11.73						
		Additional 4-Wire DS1 Digital Local Loop in Combination - Zone 2		2	UNC1X	USLXX	155.43	253.03	157.89	44.80	11.73						
		Additional 4-Wire DS1 Digital Local Loop in Combination - Zone 3		3	UNC1X	USLXX	261.89	253.03	157.89	44.80	11.73						
		Nonrecurring Currently Combined Network Elements Switch -As-Is Charge			UNC1X	UNCCC		5.61	5.61	7.00	7.00						
	EXTENDED 4-WIRE 56 KBPS DIGITAL EXTENDED LOOP WITH DS0 INTEROFFICE TRANSPORT																
		First 4-wire 56 kbps Local Loop in combination - Zone 1		1	UNCDX	UDL56	29.93	126.66	89.12	59.35	14.61						
		First 4-wire 56 kbps Local Loop in combination - Zone 2		2	UNCDX	UDL56	33.99	126.66	89.12	59.35	14.61						
		First 4-wire 56 kbps Local Loop in combination - Zone 3		3	UNCDX	UDL56	34.74	126.66	89.12	59.35	14.61						
		First 4-wiree 56 kbps Interoffice Transport - Dedicated - Per Mile per month			UNCDX	1L5XX	0.0134										
		First 4-wire 56 kbps Interoffice Transport - Dedicated - Facility Termination per month			UNCDX	U1TD5	13.41	40.63	27.47	16.77	6.91						
		Nonrecurring Currently Combined Network Elements Switch -As-Is Charge			UNCDX	UNCCC		5.61	5.61	7.00	7.00						
	EXTENDED 4-WIRE 64 KBPS DIGITAL EXTENDED LOOP WITH DS0 INTEROFFICE TRANSPORT																
		First 4-wire 64 kbps Local Loop in combination - Zone 1		1	UNCDX	UDL64	29.93	126.66	89.12	59.35	14.61						
		First 4-wire 64 kbps Local Loop in combination - Zone 2		2	UNCDX	UDL64	33.99	126.66	89.12	59.35	14.61						
		First 4-wire 64 kbps Local Loop in combination - Zone 3		3	UNCDX	UDL64	34.74	126.66	89.12	59.35	14.61						
		First I4-wire 65 kbps Interoffice Transport - Dedicated - Per Mile per month			UNCDX	1L5XX	0.0134										
		First 4-wire 64 kbps Interoffice Transport - Dedicated - Facility Termination per month			UNCDX	U1TD6	13.41	40.63	27.47	16.77	6.91						
		Nonrecurring Currently Combined Network Elements Switch -As-Is Charge			UNCDX	UNCCC		5.61	5.61	7.00	7.00						
ADDITIONAL NETWORK ELEMENTS																	
	When used as a part of a currently combined facility, the non-recurrng charges do not apply, but a Switch As Is charge does apply.																
	When used as ordinarily combined network elements in All States, the non-recurring charges apply and the Switch As Is Charge does not.																
	Nonrecurring Currently Combined Network Elements "Switch As Is" Charge (One applies to each combination)																
		Nonrecurring Currently Combined Network Elements Switch -As-Is Charge - 2 wire/4-Wire VG			UNCVX	UNCCC		5.61	5.61	7.00	7.00						

UNBUNDLED NETWORK ELEMENTS - South Carolina														Attachment: 2		Exhibit: A	
CATEGORY		RATE ELEMENTS	Interim	Zone	BCS	USOC	RATES ($)					Svc Order Submitted Elec per LSR	Svc Order Submitted Manually per LSR	Incremental Charge - Manual Svc Order vs. Electronic-1st	Incremental Charge - Manual Svc Order vs. Electronic-Add'l	Incremental Charge - Manual Svc Order vs. Electronic-Disc 1st	Incremental Charge - Manual Svc Order vs. Electronic-Disc Add'l
							Rec	Nonrecurring		Nonrecurring Disconnect		OSS Rates ($)					
								First	Add'l	First	Add'l	SOMEC	SOMAN	SOMAN	SOMAN	SOMAN	SOMAN
		Nonrecurring Currently Combined Network Elements Switch -As-Is Charge - 56/64 kbps			UNCDX	UNCCC		5.61	5.61	7.00	7.00						
		Nonrecurring Currently Combined Network Elements Switch -As-Is Charge - DS1			UNC1X	UNCCC		5.61	5.61	7.00	7.00						
		Nonrecurring Currently Combined Network Elements Switch -As-Is Charge - DS3			UNC3X	UNCCC		5.61	5.61	7.00	7.00						
		Nonrecurring Currently Combined Network Elements Switch -As-Is Charge - STS1			UNCSX	UNCCC		5.61	5.61	7.00	7.00						
	Optional Features & Functions:																
		Clear Channel Capability Extended Frame Option - per DS1	I		U1TD1, ULDD1,UNC1X	CCOEF		0I	0I	0I	0I						
		Clear Channel Capability Super FrameOption - per DS1	I		U1TD1, ULDD1,UNC1X	CCOSF		0I	0I	0I	0I						
		Clear Channel Capability (SF/ESF) Option - Subsequent Activity - per DS1	I		ULDD1, U1TD1, UNC1X, USL	NRCCC		185.26S	23.86S	1.99S	0.78S						
		C-bit Parity Option - Subsequent Activity - per DS3	i		U1TD3, ULDD3, UE3, UNC3X	NRCC3		219.58S	7.69S	.7370S	0S						
	MULTIPLEXERS																
		DS1 to DS0 Channel System per month			UNC1X	MQ1	107.57	91.24	62.71	10.56	9.81						
		OCU-DP COCI (data) - DS1 to DS0 Channel System - per month (2.4-64kbs) used for a Local Loop			UDL	1D1DD	1.19	6.59	4.73								
		OCU-DP COCI (data) - DS1 to DS0 Channel System - per month (2.4-64kbs) used for connection to a channelized DS1 Local Channel in the same SWC as collocation			U1TUD	1D1DD	1.19	6.59	4.73								
		2-wire ISDN COCI (BRITE) - DS1 to DS0 Channel Systsem - per month for a Local Loop			UDN	UC1CA	2.56	6.59	4.73								
		2-wire ISDN COCI (BRITE) - DS1 to DS0 Channel Systsem - per month used for connection to a channelized DS1 Local Channel in the same SWC as collocation			U1TUB	UC1CA	2.56	6.59	4.73								
		Voice Grade COCI - DS1 to DS0 Channel System - per month used for a Local Loop			UEA	1D1VG	0.56	6.59	4.73								
		Voice Grade COCI - DS1 to DS0 Channel System - per month used for connection to a channelized DS1 Local Channel in the same SWC as collocation			U1TUC	1D1VG	0.56	6.59	4.73								
		DS3 to DS1 Channel System per month			UNC3X	MQ3	144.02	178.54	94.18	33.33	31.90						
		STS-1 to DS1 Channel System per month			UNCSX	MQ3	144.02	178.54	94.18	33.33	31.90						
		DS1 COCI used with Loop per month			USL	UC1D1	8.64	6.59	4.73								
		DS1 COCI (used for connection to a channelized DS1 Local Channel in the same SWC as collocation) per month			U1TUA	UC1D1	8.64	6.59	4.73								
		DS1 COCI used with Interoffice Channel per month			U1TD1	UC1D1	8.64	6.59	4.73								
		DS3 Interface Unit (DS1 COCI) used with Local Channel per month			ULDD1	UC1D1	8.64	6.59	4.73								
UNBUNDLED LOCAL EXCHANGE SWITCHING(PORTS)																	
	Exchange Ports																
	NOTE: Although the Port Rate includes all available features in GA, KY, LA & TN, the desired features will need to be ordered using retail USOCs																
	2-WIRE VOICE GRADE LINE PORT RATES (RES)																
		Exchange Ports - 2-Wire Analog Line Port- Res.			UEPSR	UEPRL	1.65	2.38	2.28	1.42	1.33						
		Exchange Ports - 2-Wire Analog Line Port with Caller ID - Res.			UEPSR	UEPRC	1.65	2.38	2.28	1.42	1.33						
		Exchange Ports - 2-Wire Analog Line Port outgoing only - Res.			UEPSR	UEPRO	1.65	2.38	2.28	1.42	1.33						
		Exchange Ports - 2-Wire VG unbundled SC extended local dialing parity Port with Caller ID - Res.			UEPSR	UEPAU	1.65	2.38	2.28	1.42	1.33						
		Exchange Ports - 2-Wire VG unbundled South Carolina Area Calling port with Caller ID - Res (LW8)			UEPSR	UEPAJ	1.65	2.38	2.28	1.42	1.33						
		Exchange Ports - 2-Wire VG unbundled res, low usage line port with Caller ID (LUM)			UEPSR	UEPAP	1.65	2.38	2.28	1.42	1.33						
		Exchange Ports - 2-Wire VG South Carolina Residence Dialing Plan without Caller ID			UEPSR	UEPWL	1.65	2.38	2.28	1.42	1.33						

UNBUNDLED NETWORK ELEMENTS - South Carolina														Attachment: 2		Exhibit: A	
CATEGORY		RATE ELEMENTS	Interim	Zone	BCS	USOC	RATES ($)					Svc Order Submitted Elec per LSR	Svc Order Submitted Manually per LSR	Incremental Charge - Manual Svc Order vs. Electronic-1st	Incremental Charge - Manual Svc Order vs. Electronic-Add'l	Incremental Charge - Manual Svc Order vs. Electronic-Disc 1st	Incremental Charge - Manual Svc Order vs. Electronic-Disc Add'l
							Rec	Nonrecurring		Nonrecurring Disconnect		OSS Rates ($)					
								First	Add'l	First	Add'l	SOMEC	SOMAN	SOMAN	SOMAN	SOMAN	SOMAN
		Exchange Ports - 2-Wire VG South Carolina Residence Area Calling Plan without Caller ID capability			UEPSR	UEPRS	1.65	2.38	2.28	1.42	1.33						
		2-Wire voice unbundled Low Usage Line Port without Caller ID Capability			UEPSR	UEPRT	1.65	2.38	2.28	1.42	1.33						
		Subsequent Activity			UEPSR	USASC	0.00	0.00	0.00								
	FEATURES																
		All Available Vertical Features			UEPSR	UEPVF	3.04	0.00	0.00								
	2-WIRE VOICE GRADE LINE PORT RATES (BUS)																
		Exchange Ports - 2-Wire Analog Line Port without Caller ID - Bus			UEPSB	UEPBL	1.65	2.38	2.28	1.42	1.33						
		Exchange Ports - 2-Wire VG unbundled Line Port with unbundled port with Caller+E484 ID - Bus.			UEPSB	UEPBC	1.65	2.38	2.28	1.42	1.33						
		Exchange Ports - 2-Wire Analog Line Port outgoing only - Bus.			UEPSB	UEPBO	1.65	2.38	2.28	1.42	1.33						
		Exchange Ports - 2-Wire VG unbundled SC extended local dialing parity Port with Caller ID - Bus.			UEPSB	UEPAZ	1.65	2.38	2.28	1.42	1.33						
		Exhange Ports - 2-Wire VG unbundled incoming only port with Caller ID - Bus			UEPSB	UEPB1	1.65	2.38	2.28	1.42	1.33						
		Exchange Ports - 2-Wire VG unbundled South Carolina Bus Area Calling Port with Caller ID - Bus (LMB)			UEPSB	UEPAB	1.65	2.38	2.28	1.42	1.33						
		Exchange Ports - 2-Wire Voice South Carolina Business Dialing Plan without Caller ID			UEPSB	UEPWM	1.65	2.38	2.28	1.42	1.33						
		Exchange Ports - 2-Wire Voice South Carolina Business Area Calling Port without Caller ID			UEPSB	UEPBB	1.65	2.38	2.28	1.42	1.33						
		2-Wire voice unbundled Incoming Only Port without Caller ID Capability			UEPSB	UEPBE	1.65	2.38	2.28	1.42	1.33						
		Subsequent Activity			UEPSB	USASC	0.00	0.00	0.00								
	FEATURES																
		All Available Vertical Features			UEPSB	UEPVF	3.04	0.00	0.00								
		All Available Vertical Features				UEPVF	3.04	0.00	0.00								
	EXCHANGE PORT RATES (DID & PBX)																
		2-Wire VG Unbundled 2-Way PBX Trunk - Res			UEPSE	UEPRD	1.65	31.34	14.88	13.97	0.90						
		2-Wire VG Line Side Unbundled 2-Way PBX Trunk - Bus			UEPSP	UEPPC	1.65	31.34	14.88	13.97	0.90						
		2-Wire VG Line Side Unbundled Outward PBX Trunk - Bus			UEPSP	UEPPO	1.65	31.34	14.88	13.97	0.90						
		2-Wire VG Line Side Unbundled Incoming PBX Trunk - Bus			UEPSP	UEPP1	1.65	31.34	14.88	13.97	0.90						
		2-Wire Analog Long Distance Terminal PBX Trunk - Bus			UEPSP	UEPLD	1.65	31.34	14.88	13.97	0.90						
		2-Wire Voice Unbundled PBX LD Terminal Ports			UEPSP	UEPLD	1.65	31.34	14.88	13.97	0.90						
		2-Wire Vice Unbundled 2-Way PBX Usage Port			UEPSP	UEPXA	1.65	31.34	14.88	13.97	0.90						
		2-Wire Voice Unbundled PBX Toll Terminal Hotel Ports			UEPSP	UEPXB	1.65	31.34	14.88	13.97	0.90						
		2-Wire Voice Unbundled PBX LD DDD Terminals Port			UEPSP	UEPXC	1.65	31.34	14.88	13.97	0.90						
		2-Wire Voice Unbundled PBX LD Terminal Switchboard Port			UEPSP	UEPXD	1.65	31.34	14.88	13.97	0.90						
		2-Wire Voice Unbundled PBX LD Terminal Switchboard IDD Capable Port			UEPSP	UEPXE	1.65	31.34	14.88	13.97	0.90						
		2-Wire Voice Unbundled 2-Way PBX Hotel/Hospital Economy Administrative Calling Port			UEPSP	UEPXL	1.65	31.34	14.88	13.97	0.90						
		2-Wire Voice Unbundled 2-Way PBX Hotel/Hospital Economy Room Calling Port			UEPSP	UEPXM	1.65	31.34	14.88	13.97	0.90						
		2-Wire Voice Unbundled 1-Way Outgoing PBX Hotel/Hospital Discount Room Calling Port			UEPSP	UEPXO	1.65	31.34	14.88	13.97	0.90						
		2-Wire Voice Unbundled 1-Way Outgoing PBX Measured Port			UEPSP	UEPXS	1.65	31.34	14.88	13.97	0.90						
		2-Wire Voice Unbundled 2-Way PBX South Carolina Area Plus Calling Port			UEPSP	UEPXT	1.65	31.34	14.88	13.97	0.90						
		Subsequent Activity			UEPSP	USASC	0.00	0.00	0.00								
	FEATURES																
		All Available Vertical Features			UEPSP UEPSE	UEPVF	3.04	0.00	0.00								
	EXCHANGE PORT RATES (COIN)																
		Exchange Ports - Coin Port					1.65	2.38	2.28	1.42	1.33						
	Local Switching Features offered with Port																
	NOTE: Transmission/usage charges associated with POTS circuit switched usage will also apply to circuit switched voice and/or circuit switched data transmission by B-Channels associated with 2-wire ISDN ports.																

UNBUNDLED NETWORK ELEMENTS - South Carolina

CATEGORY	RATE ELEMENTS	Interim	Zone	BCS	USOC	RATES ($) Rec	Nonrecurring First	Nonrecurring Add'l	Nonrecurring Disconnect First	Nonrecurring Disconnect Add'l	Svc Order Submitted Elec per LSR	Svc Order Submitted Manually per LSR	Attachment: 2 Incremental Charge - Manual Svc Order vs. Electronic-1st	Incremental Charge - Manual Svc Order vs. Electronic-Add'l	Exhibit: A Incremental Charge - Manual Svc Order vs. Electronic-Disc 1st	Incremental Charge - Manual Svc Order vs. Electronic-Disc Add'l
							OSS Rates ($)									
							SOMEC	SOMAN	SOMAN	SOMAN	SOMAN	SOMAN				
	NOTE: Access to B Channel or D Channel Packet capabilities will be available only through BFR/New Business Request Process. Rates for the packet capabilities will be determined via the Bona Fide Request/New Business Request Process.															
UNBUNDLED LOCAL EXCHANGE SWITCHING(PORTS)																
	EXCHANGE PORT RATES															
	The DS1 Port rates below for 4-Wire DDITS Trunk Port and 4-Wire ISDN Port in this rate exhibit apply to the embedded base in place as of 10/2/03 until 4/1/04. After 4/1/04 these rates shall revert to tariff rates or a separate agreement.															
	Requests for 4-Wire DDITS Trunk Ports with 4-Wire ISDN DS1 Ports after the effective date of this amendment shall be provided pursuant to a separate agreement or tariff at BellSouth's discretion.															
	Exchange Ports - 2-Wire DID Port			UEPEX	UEPP2	8.86	119.57	18.78	60.03	3.77						
	Exchange Ports - DDITS Port - 4-Wire DS1 Port with DID capability (E:4/1/2004)			UEPDD	UEPDD	73.62	202.47	95.90	72.75	2.47						
	Exchange Ports - 2-Wire ISDN Port (See Notes below.)			UEPTX, UEPSX	U1PMA	13.38	72.93	53.11	47.90	10.76						
	All Features Offered			UEPTX, UEPSX	UEPVF	3.04	0.00	0.00								
	Exchange Ports - 2-Wire ISDN Port -- Channel Profiles			UEPTX, UEPSX	U1UMA	0.00	0.00	0.00								
	NOTE: Transmission/usage charges associated with POTS circuit switched usage will also apply to circuit switched voice and/or circuit switched data transmission by B-Channels associated with 2-wire ISDN ports.															
	NOTE: Access to B Channel or D Channel Packet capabilities will be available only through BFR/New Business Request Process. Rates for the packet capabilities will be determined via the Bona Fide Request/New Business Request Process.															
	EXCHANGE PORT RATES (continued)															
	Exchange Ports - 4-Wire ISDN DS1 Port with Detailed E911 Locator Capability (E:4/1/2004)			UEPEX	UEPEX	107.44	204.27	101.78	79.35	20.10						
	Exchange Ports - 4-Wire ISDN DS1 Port (E:4/1/2004)			UEPDX	UEPDX	107.44	204.27	101.78	79.35	20.10						
	Physical Collocation - DS1 Cross-Connects			UEPEX UEPDX	PE1P1	1.12	22.08	15.96	6.42	5.80						
	Virtual collocation - Special Access & UNE,cross-connect per DS1			UEPEX UEPDX	CNC1X	1.12	22.08	15.96	6.42	5.80						
	Detailed E911 with Locator Capability (required with UEPEX port)															
	Unbundled Exchange Ports, 4-Wire ISDN DS1 Port - E911 Locator Capability - Initial Profile Establishment per CLEC per State			UEPEX	UEP1A	0.00	1,808.00		156.43							
	Unbundled Exchange Ports, 4-Wire ISDN DS1 Port - E911 Locator Capability - Subsequent Profile Changes, Additions, Deletions			UEPEX	UEP1B	0.00	175.53									
	New or Additional PRI Telephone Numbers															
	Unbundled Exchange Ports, 4-Wire ISDN DS1 Port - E911 Locator Capability 2-way Telephone Numbers, per number in E911 profile [New or Additional]			UEPEX	UEP1C	0.0698	0.49	0.49								
	Unbundled Exchange Ports, 4-Wire ISDN DS1 Port - E911 Locator Capability - Outdial Telephone Numbers, per number in E911 profile [New or Additional]			UEPEX	UEP1D	0.0698	11.54	11.54								
	Unbundled Exchange Ports, 4-Wire ISDN DS1 Port - Inward Telephone Numbers - Inward Data Only Option [New or Additional]			UEPDX	UEP1E	0.00	0.49	0.49								
	Exchange Ports - 4-Wire ISDN DS1 Port - Subsequent [New] Inward Tel Numbers [Customer Testing Purposes]			UEPEX	PR7ZT	0.00	23.07	23.07								
	LOCAL NUMBER PORTABILITY															
	Local Number Portability (1 per port)			UEPEX UEPDX	LNPCN	1.75										
	INTERFACE (Provsioning Only)															
	Voice/Data			UEPEX	PR71V	0.00	0.00	0.00								
	Digital Data			UEPEX	PR71D	0.00	0.00	0.00								
	Inward Data			UEPDX	PR71E	0.00	0.00	0.00								
	New or Additional Channel															
	New or Additional - Voice/Data "B" Channel			UEPEX	PR7BV	0.00	14.56									
	New or Additional - Digital Data "B" Channel			UEPEX	PR7BF	0.00	14.56									
	New or Additional Inward Data "B" Channel			UEPDX	PR7BD	0.00	14.56									
	New or Additional Useage Sensitive Voice Data "B" Channel			UEPEX	PR7BS	0.00										
	New or Additional Useage Sensitive Digital Data "B" Channel			UEPEX	PR7BU	0.00										
	New or Additional PRI "D" Channel			UEPEX	PR7EX	0.00	14.56									
	CALL TYPES															
	Inward			UEPEX UEPDX	PR7C1	0.00	0.00	0.00								
	Outward			UEPEX	PR7CO	0.00	0.00	0.00								
	Two-way			UEPEX	PR7CC	0.00	0.00	0.00								
	UNBUNDLED PORT with REMOTE CALL FORWARDING CAPABILITY															
	UNBUNDLED REMOTE CALL FORWARDING SERVICE - RESIDENCE															
	Unbundled Remote Call Forwarding Service, Area Calling, Res			UEPVR	UERAC	1.65	2.38	2.28	1.42	1.33						

UNBUNDLED NETWORK ELEMENTS - South Carolina														Attachment: 2		Exhibit: A	
CATEGORY		RATE ELEMENTS	Interim	Zone	BCS	USOC	RATES ($)					Svc Order Submitted Elec per LSR	Svc Order Submitted Manually per LSR	Incremental Charge - Manual Svc Order vs. Electronic-1st	Incremental Charge - Manual Svc Order vs. Electronic-Add'l	Incremental Charge - Manual Svc Order vs. Electronic-Disc 1st	Incremental Charge - Manual Svc Order vs. Electronic-Disc Add'l
							Rec	Nonrecurring		Nonrecurring Disconnect		OSS Rates ($)					
								First	Add'l	First	Add'l	SOMEC	SOMAN	SOMAN	SOMAN	SOMAN	SOMAN
		Unbundled Remote Call Forwarding Service, Local Calling - Res			UEPVR	UERLC	1.65	2.38	2.28	1.42	1.33						
		Unbundled Remote Call Forwarding Service, InterLATA - Res			UEPVR	UERTE	1.65	2.38	2.28	1.42	1.33						
		Unbundled Remote Call Forwarding Service, IntraLATA - Res			UEPVR	UERTR	1.65	2.38	2.28	1.42	1.33						
	Non-Recurring																
		Unbundled Remote Call Forwarding Service - Conversion - Switch-as-is			UEPVR	USAC2		0.10	0.10								
		Unbundled Remote Call Forwarding Service - Conversion with allowed change (PIC and LPIC)			UEPVR	USACC		0.10	0.10								
	UNBUNDLED REMOTE CALL FORWARDING - Bus																
		Unbundled Remote Call Forwarding Service, Area Calling - Bus			UEPVB	UERAC	1.65	2.38	2.28	1.42	1.33						
		Unbundled Remote Call Forwarding Service, Local Calling - Bus			UEPVB	UERLC	1.65	2.38	2.28	1.42	1.33						
		Unbundled Remote Call Forwarding Service, InterLATA - Bus			UEPVB	UERTE	1.65	2.38	2.28	1.42	1.33						
		Unbundled Remote Call Forwarding Service, IntraLATA - Bus			UEPVB	UERTR	1.65	2.38	2.28	1.42	1.33						
		Unbundled Remote Call Forwarding Service Expanded and Exception Local Calling			UEPVB	UERVJ	1.65	2.38	2.28	1.42	1.33						
	Non-Recurring																
		Unbundled Remote Call Forwarding Service - Conversion - Switch-as-is			UEPVB	USAC2		0.10	0.10								
		Unbundled Remote Call Forwarding Service - Conversion with allowed change (PIC and LPIC)			UEPVB	USACC		0.10	0.10								
UNBUNDLED LOCAL SWITCHING, PORT USAGE																	
	End Office Switching (Port Usage)																
		End Office Switching Function, Per MOU					0.0010519										
		End Office Trunk Port - Shared, Per MOU					0.0002136										
	Tandem Switching (Port Usage) (Local or Access Tandem)																
		Tandem Switching Function Per MOU					0.0001634										
		Tandem Trunk Port - Shared, Per MOU					0.0002863										
		Tandem Switching Function Per MOU (Melded)					0.00004951										
		Tandem Trunk Port - Shared, Per MOU (Melded)					0.000086749										
		Melded Factor: 30.30% of the Tandem Rate															
	Common Transport																
		Common Transport - Per Mile, Per MOU					0.0000045										
		Common Transport - Facilities Termination Per MOU					0.0004095										
UNBUNDLED PORT/LOOP COMBINATIONS - COST BASED RATES																	
	Cost Based Rates are applied where BellSouth is required by FCC and/or State Commission rule to provide Unbundled Local Switching or Switch Ports.																
	Features shall apply to the Unbundled Port/Loop Combination - Cost Based Rate section in the same manner as they are applied to the Stand-Alone Unbundled Port section of this Rate Exhibit.																
	End Office and Tandem Switching Usage and Common Transport Usage rates in the Port section of this rate exhibit shall apply to all combinations of loop/port network elements except for UNE Coin Port/Loop Combinations.																
	The first and additional Port nonrecurring charges apply to Not Currently Combined Combos. For Currently Combined Combos the nonrecurring charges shall be those identified in the Nonrecurring - Currently Combined sections.																
	2-WIRE VOICE GRADE LOOP WITH 2-WIRE LINE PORT (RES)																
	UNE Port/Loop Combination Rates																
		2-Wire VG Loop/Port Combo - Zone 1		1			14.89										
		2-Wire VG Loop/Port Combo - Zone 2		2			21.52										
		2-Wire VG Loop/Port Combo - Zone 3		3			27.17										
	UNE Loop Rates																
		2-Wire Voice Grade Loop (SL1) - Zone 1		1	UEPRX	UEPLX	13.76										
		2-Wire Voice Grade Loop (SL1) - Zone 2		2	UEPRX	UEPLX	20.38										
		2-Wire Voice Grade Loop (SL1) - Zone 3		3	UEPRX	UEPLX	26.04										
	2-Wire Voice Grade Line Port Rates (Res)																
		2-Wire voice unbundled port - residence			UEPRX	UEPRL	1.13	40.30	19.90	24.98	6.65						
		2-Wire voice unbundled port with Caller ID - res			UEPRX	UEPRC	1.13	40.30	19.90	24.98	6.65						
		2-Wire voice unbundled port outgoing only - res			UEPRX	UEPRO	1.13	40.30	19.90	24.98	6.65						
		2-Wire voice Grade unbundled South Carolina extended local dialing parity port with Caller ID - res			UEPRX	UEPAU	1.13	40.30	19.90	24.98	6.65						
		2-Wire voice unbundled South Carolina Area Calling port with Caller ID - res (LW8)			UEPRX	UEPAJ	1.13	40.30	19.90	24.98	6.65						

UNBUNDLED NETWORK ELEMENTS - South Carolina													Attachment: 2		Exhibit: A	
CATEGORY	RATE ELEMENTS	Interim	Zone	BCS	USOC	RATES ($)					Svc Order Submitted Elec per LSR	Svc Order Submitted Manually per LSR	Incremental Charge - Manual Svc Order vs. Electronic-1st	Incremental Charge - Manual Svc Order vs. Electronic-Add'l	Incremental Charge - Manual Svc Order vs. Electronic-Disc 1st	Incremental Charge - Manual Svc Order vs. Electronic-Disc Add'l
						Rec	Nonrecurring		Nonrecurring Disconnect		OSS Rates ($)					
							First	Add'l	First	Add'l	SOMEC	SOMAN	SOMAN	SOMAN	SOMAN	SOMAN
	2-Wire voice unbundles res, low usage line port with Caller ID (LUM)			UEPRX	UEPAP	1.13	37.93	16.72								
	2-Wire Voice Unbundled South Carolina Residence Dialing Plan without Caller ID			UEPRX	UEPWL	1.13	40.30	19.90	24.98	6.65						
	2-Wire voice unbundled South Carolina Area Calling Port without Caller ID Capability			UEPRX	UEPRS	1.13	40.30	19.90	24.98	6.65						
	2-Wire voice unbundled Low Usage Line Port without Caller ID Capability			UEPRX	UEPRT	1.13	40.30	19.90	24.98	6.65						
FEATURES																
	All Features Offered			UEPRX	UEPVF	3.04	0.00	0.00								
LOCAL NUMBER PORTABILITY																
	Local Number Portability (1 per port)			UEPRX	LNPCX	0.35										
NONRECURRING CHARGES (NRCs) - CURRENTLY COMBINED																
	2-Wire Voice Grade Loop / Line Port Combination - Conversion - Switch-as-is			UEPRX	USAC2		0.10	0.10								
	2-Wire Voice Grade Loop / Line Port Combination - Conversion - Switch with change			UEPRX	USACC		0.10	0.10								
ADDITIONAL NRCs																
	2-Wire Voice Grade Loop/Line Port Combination - Subsequent Activity			UEPRX	USAS2	0.00	0.00	0.00								
	Unbundled Miscellaneous Rate Element, Tag Loop at End User Premise			UEPRX	URETL		8.33	0.83								
OFF/ON PREMISES EXTENSION CHANNELS																
	2 Wire Analog Voice Grade Extension Loop – Non-Design		1	UEPRX	UEAEN	14.94	37.92	17.62	23.56	5.32						
	2 Wire Analog Voice Grade Extension Loop – Non-Design		2	UEPRX	UEAEN	21.39	37.92	17.62	23.56	5.32						
	2 Wire Analog Voice Grade Extension Loop – Non-Design		3	UEPRX	UEAEN	26.72	37.92	17.62	23.56	5.32						
	2 Wire Analog Voice Grade Extension Loop – Design		1	UEPRX	UEAED	16.68	105.98	68.43	53.05	10.61						
	2 Wire Analog Voice Grade Extension Loop – Design		2	UEPRX	UEAED	23.13	105.98	68.43	53.05	10.61						
	2 Wire Analog Voice Grade Extension Loop – Design		3	UEPRX	UEAED	28.46	105.98	68.43	53.05	10.61						
INTEROFFICE TRANSPORT																
	Interoffice Transport - Dedicated - 2 Wire Voice Grade - Facility Termination			UEPRX	U1TV2	24.30	40.63	27.47	16.77	6.91						
	Interoffice Transport - Dedicated - 2 Wire Voice Grade - Per Mile or Fraction Mile			UEPRX	U1TVM	0.0167	0.00	0.00								
2-WIRE VOICE GRADE LOOP WITH 2-WIRE LINE PORT (BUS)																
UNE Port/Loop Combination Rates																
	2-Wire VG Loop/Port Combo - Zone 1		1			14.89										
	2-Wire VG Loop/Port Combo - Zone 2		2			21.52										
	2-Wire VG Loop/Port Combo - Zone 3		3			27.17										
UNE Loop Rates																
	2-Wire Voice Grade Loop (SL1) - Zone 1		1	UEPBX	UEPLX	13.76										
	2-Wire Voice Grade Loop (SL1) - Zone 2		2	UEPBX	UEPLX	20.38										
	2-Wire Voice Grade Loop (SL1) - Zone 3		3	UEPBX	UEPLX	26.04										
2-Wire Voice Grade Line Port (Bus)																
	2-Wire voice unbundled port without Caller ID - bus			UEPBX	UEPBL	1.13	40.30	19.90	24.98	6.65						
	2-Wire voice unbundled port with Caller + E484 ID - bus			UEPBX	UEPBC	1.13	40.30	19.90	24.98	6.65						
	2-Wire voice unbundled port outgoing only - bus			UEPBX	UEPBO	1.13	40.30	19.90	24.98	6.65						
	2-Wire voice Grade unbundled South Carolina extended local dialing parity port with Caller ID - bus			UEPBX	UEPAZ	1.13	40.30	19.90	24.98	6.65						
	2-Wire voice unbundled incoming only port with Caller ID - Bus			UEPBX	UEPB1	1.13	40.30	19.90	24.98	6.65						
	2-Wire voice unbundled South Carolina Bus Area Calling Port with Caller ID (LMB)			UEPBX	UEPAB	1.13	40.30	19.90	24.98	6.65						
	2-Wire Voice Unbundled South Carolina Business Dialing Plan without Caller ID			UEPBX	UEPWM	1.13	40.30	19.90	24.98	6.65						
	2-Wire voice unbundled South Carolina Business Area Calling Port without Caller ID Capability			UEPBX	UEPBB	1.13	40.30	19.90	24.98	6.65						
	2-Wire voice unbundled Incoming Only Port without Caller ID Capability			UEPBX	UEPBE	1.13	40.30	19.90	24.98	6.65						
LOCAL NUMBER PORTABILITY																

UNBUNDLED NETWORK ELEMENTS - South Carolina														Attachment: 2		Exhibit: A	
CATEGORY	RATE ELEMENTS	Interim	Zone	BCS	USOC	RATES ($)					Svc Order Submitted Elec per LSR	Svc Order Submitted Manually per LSR	Incremental Charge - Manual Svc Order vs. Electronic-1st	Incremental Charge - Manual Svc Order vs. Electronic-Add'l	Incremental Charge - Manual Svc Order vs. Electronic-Disc 1st	Incremental Charge - Manual Svc Order vs. Electronic-Disc Add'l
						Rec	Nonrecurring		Nonrecurring Disconnect		OSS Rates ($)					
							First	Add'l	First	Add'l	SOMEC	SOMAN	SOMAN	SOMAN	SOMAN	SOMAN
	Local Number Portability (1 per port)			UEPBX	LNPCX	0.35										
FEATURES																
	All Features Offered			UEPBX	UEPVF	3.04	0.00	0.00								
NONRECURRING CHARGES (NRCs) - CURRENTLY COMBINED																
	2-Wire Voice Grade Loop / Line Port Combination - Conversion - Switch-as-is			UEPBX	USAC2		0.10	0.10								
	2-Wire Voice Grade Loop / Line Port Combination - Conversion - Switch with change			UEPBX	USACC		0.10	0.10								
ADDITIONAL NRCs																
	2-Wire Voice Grade Loop/Line Port Combination - Subsequent Activity			UEPBX	USAS2		0.00	0.00								
	Unbundled Miscellaneous Rate Element, Tag Loop at End User Premise			UEPBX	URETL		8.33	0.83								
OFF/ON PREMISES EXTENSION CHANNELS																
	2 Wire Analog Voice Grade Extension Loop – Non-Design		1	UEPBX	UEAEN	14.94	37.92	17.62	23.56	5.32						
	2 Wire Analog Voice Grade Extension Loop – Non-Design		2	UEPBX	UEAEN	21.39	37.92	17.62	23.56	5.32						
	2 Wire Analog Voice Grade Extension Loop – Non-Design		3	UEPBX	UEAEN	26.72	37.92	17.62	23.56	5.32						
	2 Wire Analog Voice Grade Extension Loop – Design		1	UEPBX	UEAED	16.68	105.98	68.43	53.05	10.61						
	2 Wire Analog Voice Grade Extension Loop – Design		2	UEPBX	UEAED	23.13	105.98	68.43	53.05	10.61						
	2 Wire Analog Voice Grade Extension Loop – Design		3	UEPBX	UEAED	28.46	105.98	68.43	53.05	10.61						
INTEROFFICE TRANSPORT																
	Interoffice Transport - Dedicated - 2 Wire Voice Grade - Facility Termination			UEPBX	U1TV2	24.30	40.63	27.47	16.77	6.91						
	Interoffice Transport - Dedicated - 2 Wire Voice Grade - Per Mile or Fraction Mile			UEPBX	U1TVM	0.0167	0.00	0.00								
2-WIRE VOICE GRADE LOOP WITH 2-WIRE LINE PORT (RES - PBX)																
UNE Port/Loop Combination Rates																
	2-Wire VG Loop/Port Combo - Zone 1		1			14.89										
	2-Wire VG Loop/Port Combo - Zone 2		2			21.52										
	2-Wire VG Loop/Port Combo - Zone 3		3			27.17										
UNE Loop Rates																
	2-Wire Voice Grade Loop (SL 1) - Zone 1		1	UEPRG	UEPLX	13.76										
	2-Wire Voice Grade Loop (SL 1) - Zone 2		2	UEPRG	UEPLX	20.38										
	2-Wire Voice Grade Loop (SL 1) - Zone 3		3	UEPRG	UEPLX	26.04										
2-Wire Voice Grade Line Port Rates (RES - PBX)																
	2-Wire VG Unbundled Combination 2-Way PBX Trunk Port - Res			UEPRG	UEPRD	1.13	69.26	32.50	37.53	6.22						
LOCAL NUMBER PORTABILITY																
	Local Number Portability (1 per port)			UEPRG	LNPCP	3.15	0.00	0.00								
FEATURES																
	All Features Offered			UEPRG	UEPVF	3.04	0.00	0.00								
NONRECURRING CHARGES (NRCs) - CURRENTLY COMBINED																
	2-Wire Voice Grade Loop/ Line Port Combination (PBX) - Conversion - Switch-As-Is			UEPRG	USAC2		7.93	1.91								
	2-Wire Voice Grade Loop/ Line Port Combination (PBX) - Conversion - Switch with Change			UEPRG	USACC		7.93	1.91								
ADDITIONAL NRCs																
	2-Wire Voice Grade Loop/ Line Port Combination (PBX) - Subsequent Activity			UEPRG	USAS2	0.00	0.00	0.00								
	PBX Subsequent Activity - Change/Rearrange Multiline Hunt Group						7.34	7.34								
	Unbundled Miscellaneous Rate Element, Tag Loop at End User Premise			UEPRG	URETL		8.33	0.83								
OFF/ON PREMISES EXTENSION CHANNELS																
	Local Channel Voice grade, per termination		1	UEPRG	P2JHX	16.68	105.98	68.43	53.05	10.61						
	Local Channel Voice grade, per termination		2	UEPRG	P2JHX	23.13	105.98	68.43	53.05	10.61						
	Local Channel Voice grade, per termination		3	UEPRG	P2JHX	28.46	105.98	68.43	53.05	10.61						
	Non-Wire Direct Serve Channel Voice Grade		1	UEPRG	SDD2X	17.74	131.88	62.06	90.70	13.42						
	Non-Wire Direct Serve Channel Voice Grade		2	UEPRG	SDD2X	25.16	65.94	31.03	45.35	6.71						

UNBUNDLED NETWORK ELEMENTS - South Carolina														Attachment: 2		Exhibit: A	
CATEGORY	RATE ELEMENTS	Interim	Zone	BCS	USOC	RATES ($)					Svc Order Submitted Elec per LSR	Svc Order Submitted Manually per LSR	Incremental Charge - Manual Svc Order vs. Electronic-1st	Incremental Charge - Manual Svc Order vs. Electronic-Add'l	Incremental Charge - Manual Svc Order vs. Electronic-Disc 1st	Incremental Charge - Manual Svc Order vs. Electronic-Disc Add'l
						Rec	Nonrecurring		Nonrecurring Disconnect		OSS Rates ($)					
							First	Add'l	First	Add'l	SOMEC	SOMAN	SOMAN	SOMAN	SOMAN	SOMAN
	Non-Wire Direct Serve Channel Voice Grade		3	UEPRG	SDD2X	29.58	65.94	31.03	45.35	6.71						
INTEROFFICE TRANSPORT																
	Interoffice Transport - Dedicated - 2 Wire Voice Grade - Facility Termination			UEPRG	U1TV2	24.30	40.63	27.47	16.77	6.91						
	Interoffice Transport - Dedicated - 2 Wire Voice Grade - Per Mile or Fraction Mile			UEPRG	U1TVM	0.0167	0.00	0.00								
2-WIRE VOICE GRADE LOOP WITH 2-WIRE LINE PORT (BUS - PBX)																
UNE Port/Loop Combination Rates																
	2-Wire VG Loop/Port Combo - Zone 1		1			14.89										
	2-Wire VG Loop/Port Combo - Zone 2		2			21.52										
	2-Wire VG Loop/Port Combo - Zone 3		3			27.17										
UNE Loop Rates																
	2-Wire Voice Grade Loop (SL 1) - Zone 1		1	UEPPX	UEPLX	13.76										
	2-Wire Voice Grade Loop (SL 1) - Zone 2		2	UEPPX	UEPLX	20.38										
	2-Wire Voice Grade Loop (SL 1) - Zone 3		3	UEPPX	UEPLX	26.04										
2-Wire Voice Grade Line Port Rates (BUS - PBX)																
	Line Side Unbundled Combination 2-Way PBX Trunk Port - Bus			UEPPX	UEPPC	1.13	69.26	32.50	37.53	6.22						
	Line Side Unbundled Outward PBX Trunk Port - Bus			UEPPX	UEPPO	1.13	69.26	32.50	37.53	6.22						
	Line Side Unbundled Incoming PBX Trunk Port - Bus			UEPPX	UEPP1	1.13	69.26	32.50	37.53	6.22						
	2-Wire Voice Unbundled PBX LD Terminal Ports			UEPPX	UEPLD	1.13	69.26	32.50	37.53	6.22						
	2-Wire Voice Unbundled 2-Way Combination PBX Usage Port			UEPPX	UEPXA	1.13	69.26	32.50	37.53	6.22						
	2-Wire Voice Unbundled PBX Toll Terminal Hotel Ports			UEPPX	UEPXB	1.13	69.26	32.50	37.53	6.22						
	2-Wire Voice Unbundled PBX LD DDD Terminals Port			UEPPX	UEPXC	1.13	69.26	32.50	37.53	6.22						
	2-Wire Voice Unbundled PBX LD Terminal Switchboard Port			UEPPX	UEPXD	1.13	69.26	32.50	37.53	6.22						
	2-Wire Voice Unbundled PBX LD Terminal Switchboard IDD Capable Port			UEPPX	UEPXE	1.13	69.26	32.50	37.53	6.22						
	2-Wire Voice Unbundled 2-Way PBX Hotel/Hospital Economy Administrative Calling Port			UEPPX	UEPXL	1.13	69.26	32.50	37.53	6.22						
	2-Wire Voice Unbundled 2-Way PBX Hotel/Hospital Economy Room Calling Port			UEPPX	UEPXM	1.13	69.26	32.50	37.53	6.22						
	2-Wire Voice Unbundled 1-Way Outgoing PBX Hotel/Hospital Discount Room Calling Port			UEPPX	UEPXO	1.13	69.26	32.50	37.53	6.22						
	2-Wire Voice Unbundled 1-Way Outgoing PBX Measured Port			UEPPX	UEPXS	1.13	69.26	32.50	37.53	6.22						
	2-Wire Voice Unbundled 2-Way PBX South Carolina Area Plus Calling Port			UEPPX	UEPXT	1.13	69.26	32.50	37.53	6.22						
LOCAL NUMBER PORTABILITY																
	Local Number Portability (1 per port)			UEPPX	LNPCP	3.15	0.00	0.00								
FEATURES																
	All Features Offered			UEPPX	UEPVF	3.04	0.00	0.00								
NONRECURRING CHARGES (NRCs) - CURRENTLY COMBINED																
	2-Wire Voice Grade Loop/ Line Port Combination (PBX) - Conversion - Switch-As-Is			UEPPX	USAC2		7.93	1.91								
	2-Wire Voice Grade Loop/ Line Port Combination (PBX) - Conversion - Switch with Change			UEPPX	USACC		7.93	1.91								
ADDITIONAL NRCs																
	2-Wire Voice Grade Loop/ Line Port Combination (PBX) - Subsequent Activity			UEPPX	USAS2	0.00	0.00	0.00								
	PBX Subsequent Activity - Change/Rearrange Multiline Hunt Group						7.34	7.34								
	Unbundled Miscellaneous Rate Element, Tag Loop at End User Premise			UEPPX	URETL		8.33	0.83								
OFF/ON PREMISES EXTENSION CHANNELS																
	Local Channel Voice grade, per termination		1	UEPPX	P2JHX	16.68	105.98	68.43	53.05	10.61						
	Local Channel Voice grade, per termination		2	UEPPX	P2JHX	23.13	105.98	68.43	53.05	10.61						
	Local Channel Voice grade, per termination		3	UEPPX	P2JHX	28.46	105.98	68.43	53.05	10.61						
	Non-Wire Direct Serve Channel Voice Grade		1	UEPPX	SDD2X	17.74	131.88	62.06	90.70	13.42						
	Non-Wire Direct Serve Channel Voice Grade		2	UEPPX	SDD2X	25.16	65.94	31.03	45.35	6.71						
	Non-Wire Direct Serve Channel Voice Grade		3	UEPPX	SDD2X	29.58	65.94	31.03	45.35	6.71						

UNBUNDLED NETWORK ELEMENTS - South Carolina														Attachment: 2		Exhibit: A	
CATEGORY	RATE ELEMENTS	Interim	Zone	BCS	USOC	RATES ($)					Svc Order Submitted Elec per LSR	Svc Order Submitted Manually per LSR	Incremental Charge - Manual Svc Order vs. Electronic-1st	Incremental Charge - Manual Svc Order vs. Electronic-Add'l	Incremental Charge - Manual Svc Order vs. Electronic-Disc 1st	Incremental Charge - Manual Svc Order vs. Electronic-Disc Add'l
						Rec	Nonrecurring		Nonrecurring Disconnect		OSS Rates ($)					
							First	Add'l	First	Add'l	SOMEC	SOMAN	SOMAN	SOMAN	SOMAN	SOMAN
	INTEROFFICE TRANSPORT															
	Interoffice Transport - Dedicated - 2 Wire Voice Grade - Facility Termination			UEPPX	U1TV2	24.30	40.63	27.47	16.77	6.91						
	Interoffice Transport - Dedicated - 2 Wire Voice Grade - Per Mile or Fraction Mile			UEPPX	U1TVM	0.0167	0.00	0.00								
	2-WIRE VOICE GRADE LOOP WITH 2-WIRE ANALOG LINE COIN PORT															
	UNE Port/Loop Combination Rates															
	2-Wire VG Coin Port/Loop Combo – Zone 1		1			14.89										
	2-Wire VG Coin Port/Loop Combo – Zone 2		2			21.52										
	2-Wire VG Coin Port/Loop Combo – Zone 3		3			27.17										
	UNE Loop Rates															
	2-Wire Voice Grade Loop (SL1) - Zone 1		1	UEPCO	UEPLX	13.76										
	2-Wire Voice Grade Loop (SL1) - Zone 2		2	UEPCO	UEPLX	20.38										
	2-Wire Voice Grade Loop (SL1) - Zone 3		3	UEPCO	UEPLX	26.04										
	2-Wire Voice Grade Line Ports (COIN)															
	2-Wire Coin 2-Way without Operator Screening and without Blocking (SC)			UEPCO	UEPSD	1.13	40.30	19.90	24.98	6.65						
	2-Wire Coin 2-Way with Operator Screening and Blocking: 011, 900/976, 1+DDD (SC)			UEPCO	UEPSA	1.13	40.30	19.90	24.98	6.65						
	2-Wire Coin 2-Way with Operator Screening and 011 Blocking (SC)			UEPCO	UEPSH	1.13	40.30	19.90	24.98	6.65						
	2-Wire Coin 2-Way with Operator Screening and 011 Blocking; with Dialing Parity (SC)			UEPCO	UEPSC	1.13	40.30	19.90	24.98	6.65						
	2-Wire Coin 2-Way with Operator Screening and: 900 Blocking: 900/976, 1+DDD, 011+, and Local (SC)			UEPCO	UEPCC	1.13	40.30	19.90	24.98	6.65						
	2-Wire Coin 2-W Operator Screen: 900 Block: 900/976, 1+DDD, 011+, Local; Enhanced Call OPT 3YV (SC)			UEPCO	UEPCE	1.13	40.30	19.90	24.98	6.65						
	2-Wire Coin 2-W Operator Screen: 900 Block: 900/976, 1+DDD, 011+, Local; Enhanced Call OPT AP7 (SC)			UEPCO	UEPCF	1.13	40.30	19.90	24.98	6.65						
	2-Wire Coin Outward without Blocking and without Operator Screening (SC)			UEPCO	UEPSG	1.13	40.30	19.90	24.98	6.65						
	2-Wire Coin Outward with Operator Screening and 011 Blocking (SC)			UEPCO	UEPSF	1.13	40.30	19.90	24.98	6.65						
	2-Wire Coin Outward with Operator Screening and Blocking: 011, 900/976, 1+DDD (SC)			UEPCO	UEPSJ	1.13	40.30	19.90	24.98	6.65						
	2-Wire Coin Outward with Operator Screening and Blocking: 900/976, 1+DDD, 011+, and Local (SC)			UEPCO	UEPCM	1.13	40.30	19.90	24.98	6.65						
	2-Wire Coin Out Operator Screen & Block: 900/976, 1+DDD, 011+, Local; Enhanced Calling OPT 3YW (SC)			UEPCO	UEPCP	1.13	40.30	19.90	24.98	6.65						
	2-Wire 2-Way Smartline with 900/976 (all states except LA)			UEPCO	UEPCK	1.13	40.30	19.90	24.98	6.65						
	2-Wire Coin Outward Smartline with 900/976 (all states except LA)			UEPCO	UEPCR	1.13	40.30	19.90	24.98	6.65						
	ADDITIONAL UNE COIN PORT/LOOP (RC)															
	UNE Coin Port/Loop Combo Usage (Flat Rate)			UEPCO	URECU	4.05	0.00	0.00	0.00	0.00						
	LOCAL NUMBER PORTABILITY															
	Local Number Portability (1 per port)			UEPCO	LNPCX	0.35										
	NONRECURRING CHARGES - CURRENTLY COMBINED															
	2-Wire Voice Grade Loop / Line Port Combination - Conversion - Switch-as-is			UEPCO	USAC2		0.10	0.10								
	2-Wire Voice Grade Loop / Line Port Combination - Conversion - Switch with change			UEPCO	USACC		0.10	0.10								
	ADDITIONAL NRCs															
	2-Wire Voice Grade Loop/Line Port Combination - Subsequent Activity			UEPCO	USAS2		0.00	0.00								
	Unbundled Miscellaneous Rate Element, Tag Loop at End User Premise			UEPCO	URETL		8.33	0.83								
	2-WIRE VOICE LOOP/ 2WIRE VOICE GRADE IO TRANSPORT/ 2-WIRE LINE PORT (RES)															
	UNE Port/Loop Combination Rates															
	2-Wire VG Loop/IO Tranport/Port Combo - Zone 1		1			18.00										

UNBUNDLED NETWORK ELEMENTS - South Carolina														Attachment: 2		Exhibit: A	
CATEGORY	RATE ELEMENTS	Interim	Zone	BCS	USOC	RATES ($)					Svc Order Submitted Elec per LSR	Svc Order Submitted Manually per LSR	Incremental Charge - Manual Svc Order vs. Electronic-1st	Incremental Charge - Manual Svc Order vs. Electronic-Add'l	Incremental Charge - Manual Svc Order vs. Electronic-Disc 1st	Incremental Charge - Manual Svc Order vs. Electronic-Disc Add'l
						Rec	Nonrecurring		Nonrecurring Disconnect		OSS Rates ($)					
							First	Add'l	First	Add'l	SOMEC	SOMAN	SOMAN	SOMAN	SOMAN	SOMAN
	2-Wire VG Loop/IO Tranport/Port Combo - Zone 2		2			24.45										
	2-Wire VG Loop/IO Tranport/Port Combo - Zone 3		3			29.78										
UNE Loop Rates																
	2-Wire Voice Grade Loop (SL2) - Zone 1		1	UEPFR	UECF2	16.68										
	2-Wire Voice Grade Loop (SL2) - Zone 2		2	UEPFR	UECF2	23.13										
	2-Wire Voice Grade Loop (SL2) - Zone 3		3	UEPFR	UECF2	28.46										
2-Wire Voice Grade Line Port Rates (Res)																
	2-Wire voice unbundled port - residence			UEPFR	UEPRL	1.32	108.36	70.71	1.42	1.33						
	2-Wire voice unbundled port with Caller ID - res			UEPFR	UEPRC	1.32	108.36	70.71	1.42	1.33						
	2-Wire voice unbundled port outgoing only - res			UEPFR	UEPRO	1.32	108.36	70.71	1.42	1.33						
	2-Wire voice Grade unbundled South Carolina extended local dialing parity port with Caller ID - res			UEPFR	UEPAU	1.32	108.36	70.71	1.42	1.33						
	2-Wire voice unbundled South Carolina Area Calling port with Caller ID - res (LW8)			UEPFR	UEPAJ	1.32	108.36	70.71	1.42	1.33						
	2-Wire voice unbundles res, low usage line port with Caller ID (LUM)			UEPFR	UEPAP	1.32	108.36	70.71	1.42	1.33						
	2-Wire Voice Unbundled South Carolina Residence Dialing Plan without Caller ID			UEPFR	UEPWL	1.32	108.36	70.71	1.42	1.33						
INTEROFFICE TRANSPORT																
	Interoffice Transport - Dedicated - 2 Wire Voice Grade - Facility Termination			UEPFR	U1TV2	19.44	40.63	27.47	16.77	6.91						
	Interoffice Transport - Dedicated - 2 Wire Voice Grade - Per Mile or Fraction Mile			UEPFR	1L5XX	0.0134										
FEATURES																
	All Features Offered			UEPFR	UEPVF	3.04	0.00	0.00								
LOCAL NUMBER PORTABILITY																
	Local Number Portability (1 per port)			UEPFR	LNPCX	0.35										
NONRECURRING CHARGES (NRCs) - CURRENTLY COMBINED																
	2-Wire Loop / Dedicated IO Transport / 2 Wire Line Port Combination - Conversion - Switch-as-is			UEPFR	USAC2		8.50	1.87								
	2-Wire Loop / Dedicated IO Transport / 2 Wire Line Port Combination - Conversion - Switch-With-Change			UEPFR	USACC		8.50	1.87								
	Unbundled Miscellaneous Rate Element, Tag Designed Loop at End User Premise			UEPFR	URETN		11.24	1.10								
2-WIRE VOICE LOOP/ 2WIRE VOICE GRADE IO TRANSPORT/ 2-WIRE LINE PORT (BUS)																
UNE Port/Loop Combination Rates																
	2-Wire VG Loop/IO Tranport/Port Combo - Zone 1		1			18.00										
	2-Wire VG Loop/IO Tranport/Port Combo - Zone 2		2			24.45										
	2-Wire VG Loop/IO Tranport/Port Combo - Zone 3		3			29.78										
UNE Loop Rates																
	2-Wire Voice Grade Loop (SL2) - Zone 1		1	UEPFB	UECF2	16.68										
	2-Wire Voice Grade Loop (SL2) - Zone 2		2	UEPFB	UECF2	23.13										
	2-Wire Voice Grade Loop (SL2) - Zone 3		3	UEPFB	UECF2	28.46										
2-Wire Voice Grade Line Port (Bus)																
	2-Wire voice unbundled port without Caller ID - bus			UEPFB	UEPBL	1.32	108.36	70.71	1.42	1.33						
	2-Wire voice unbundled port with Caller + E484 ID - bus			UEPFB	UEPBC	1.32	108.36	70.71	1.42	1.33						
	2-Wire voice unbundled port outgoing only - bus			UEPFB	UEPBO	1.32	108.36	70.71	1.42	1.33						
	2-Wire voice Grade unbundled South Carolina extended local dialing parity port with Caller ID - bus			UEPFB	UEPAZ	1.32	108.36	70.71	1.42	1.33						
	2-Wire voice unbundled incoming only port with Caller ID - Bus			UEPFB	UEPB1	1.32	108.36	70.71	1.42	1.33						
	2-Wire voice unbundled South Carolina Bus Area Calling Port with Caller ID (LMB)			UEPFB	UEPAB	1.32	108.36	70.71	1.42	1.33						
	2-Wire Voice Unbundled South Carolina Business Dialing Plan without Caller ID			UEPFB	UEPWM	1.32	108.36	70.71	1.42	1.33						
LOCAL NUMBER PORTABILITY																
	Local Number Portability (1 per port)			UEPFB	LNPCX	0.35										
INTEROFFICE TRANSPORT																
	Interoffice Transport - Dedicated - 2 Wire Voice Grade - Facility Termination			UEPFB	U1TV2	19.44	40.63	27.47	16.77	6.91						

UNBUNDLED NETWORK ELEMENTS - South Carolina													Attachment: 2		Exhibit: A	
CATEGORY	RATE ELEMENTS	Interim	Zone	BCS	USOC	RATES ($)					Svc Order Submitted Elec per LSR	Svc Order Submitted Manually per LSR	Incremental Charge - Manual Svc Order vs. Electronic-1st	Incremental Charge - Manual Svc Order vs. Electronic-Add'l	Incremental Charge - Manual Svc Order vs. Electronic-Disc 1st	Incremental Charge - Manual Svc Order vs. Electronic-Disc Add'l
						Rec	Nonrecurring		Nonrecurring Disconnect		OSS Rates ($)					
							First	Add'l	First	Add'l	SOMEC	SOMAN	SOMAN	SOMAN	SOMAN	SOMAN
	Interoffice Transport - Dedicated - 2 Wire Voice Grade - Per Mile or Fraction Mile			UEPFB	1L5XX	0.0134										
FEATURES																
	All Features Offered			UEPFB	UEPVF	3.04	0.00	0.00								
NONRECURRING CHARGES (NRCs) - CURRENTLY COMBINED																
	2-Wire Loop / Dedicated IO Transport / 2 Wire Line Port Combination - Conversion - Switch-as-is			UEPFB	USAC2		8.50	1.87								
	2-Wire Loop / Dedicated IO Transport / 2 Wire Line Port Combination - Conversion - Switch with change			UEPFB	USACC		8.50	1.87								
	Unbundled Miscellaneous Rate Element, Tag Designed Loop at End User Premise			UEPFB	URETN		11.24	1.10								
2-WIRE VOICE LOOP/ 2WIRE VOICE GRADE IO TRANSPORT/ 2-WIRE LINE PORT (PBX)																
UNE Port/Loop Combination Rates																
	2-Wire VG Loop/IO Tranport/Port Combo - Zone 1		1			18.00										
	2-Wire VG Loop/IO Tranport/Port Combo - Zone 2		2			24.45										
	2-Wire VG Loop/IO Tranport/Port Combo - Zone 3		3			29.78										
UNE Loop Rates																
	2-Wire Voice Grade Loop (SL2) - Zone 1		1	UEPFP	UECF2	16.68										
	2-Wire Voice Grade Loop (SL2) - Zone 2		2	UEPFP	UECF2	23.13										
	2-Wire Voice Grade Loop (SL2) - Zone 3		3	UEPFP	UECF2	28.46										
2-Wire Voice Grade Line Port Rates (BUS - PBX)																
	Line Side Unbundled Combination 2-Way PBX Trunk Port - Bus			UEPFP	UEPPC	1.32	137.32	83.31	67.02	11.51						
	Line Side Unbundled Outward PBX Trunk Port - Bus			UEPFP	UEPPO	1.32	137.32	83.31	67.02	11.51						
	Line Side Unbundled Incoming PBX Trunk Port - Bus			UEPFP	UEPP1	1.32	137.32	83.31	67.02	11.51						
	2-Wire Voice Unbundled PBX LD Terminal Ports			UEPFP	UEPLD	1.32	137.32	83.31	67.02	11.51						
	2-Wire Voice Unbundled 2-Way Combination PBX Usage Port			UEPFP	UEPXA	1.32	137.32	83.31	67.02	11.51						
	2-Wire Voice Unbundled PBX Toll Terminal Hotel Ports			UEPFP	UEPXB	1.32	137.32	83.31	67.02	11.51						
	2-Wire Voice Unbundled PBX LD DDD Terminals Port			UEPFP	UEPXC	1.32	137.32	83.31	67.02	11.51						
	2-Wire Voice Unbundled PBX LD Terminal Switchboard Port			UEPFP	UEPXD	1.32	137.32	83.31	67.02	11.51						
	2-Wire Voice Unbundled PBX LD Terminal Switchboard IDD Capable Port			UEPFP	UEPXE	1.32	137.32	83.31	67.02	11.51						
	2-Wire Voice Unbundled 2-Way PBX Hotel/Hospital Economy Administrative Calling Port			UEPFP	UEPXL	1.32	137.32	83.31	67.02	11.51						
	2-Wire Voice Unbundled 2-Way PBX Hotel/Hospital Economy Room Calling Port			UEPFP	UEPXM	1.32	137.32	83.31	67.02	11.51						
	2-Wire Voice Unbundled 1-Way Outgoing PBX Hotel/Hospital Discount Room Calling Port			UEPFP	UEPXO	1.32	137.32	83.31	67.02	11.51						
	2-Wire Voice Unbundled 1-Way Outgoing PBX Measured Port			UEPFP	UEPXS	1.32	137.32	83.31	67.02	11.51						
	2-Wire Voice Unbundled 2-Way PBX South Carolina Area Plus Calling Port			UEPFP	UEPXT	1.32	137.32	83.31	67.02	11.51						
LOCAL NUMBER PORTABILITY																
	Local Number Portability (1 per port)			UEPFP	LNPCP	3.15	0.00	0.00								
INTEROFFICE TRANSPORT																
	Interoffice Transport - Dedicated - 2 Wire Voice Grade - Facility Termination			UEPFP	U1TV2	19.44	40.63	27.47	16.77	6.91						
	Interoffice Transport - Dedicated - 2 Wire Voice Grade - Per Mile or Fraction Mile			UEPFP	1L5XX	0.0134										
FEATURES																
	All Features Offered			UEPFP	UEPVF	3.04	0.00	0.00								
NONRECURRING CHARGES (NRCs) - CURRENTLY COMBINED																
	2-Wire Loop / Dedicated IO Transport / 2 Wire Line Port Combination - Conversion - Switch-as-is			UEPFP	USAC2		8.50	1.87								
	2-Wire Loop / Dedicated IO Transport / 2 Wire Line Port Combination - Conversion - Switch with change			UEPFP	USACC		8.50	1.87								
	Unbundled Miscellaneous Rate Element, Tag Designed Loop at End User Premise			UEPFP	URETN		11.24	1.10								
UNBUNDLED PORT/LOOP COMBINATIONS - COST BASED RATES																
2-WIRE VOICE GRADE LOOP- BUS ONLY - WITH 2-WIRE DID TRUNK PORT																

UNBUNDLED NETWORK ELEMENTS - South Carolina													Attachment: 2		Exhibit: A	
CATEGORY	RATE ELEMENTS	Interim	Zone	BCS	USOC	RATES ($)					Svc Order Submitted Elec per LSR	Svc Order Submitted Manually per LSR	Incremental Charge - Manual Svc Order vs. Electronic-1st	Incremental Charge - Manual Svc Order vs. Electronic-Add'l	Incremental Charge - Manual Svc Order vs. Electronic-Disc 1st	Incremental Charge - Manual Svc Order vs. Electronic-Disc Add'l
						Rec	Nonrecurring		Nonrecurring Disconnect		OSS Rates ($)					
							First	Add'l	First	Add'l	SOMEC	SOMAN	SOMAN	SOMAN	SOMAN	SOMAN
	UNE Port/Loop Combination Rates															
	2-Wire VG Loop/2-Wire DID Trunk Port Combo - UNE Zone 1		1			23.75										
	2-Wire VG Loop/2-Wire DID Trunk Port Combo - UNE Zone 2		2			30.20										
	2-Wire VG Loop/2-Wire DID Trunk Port Combo - UNE Zone 3		3			35.52										
	UNE Loop Rates															
	2-Wire Analog Voice Grade Loop - (SL2) - UNE Zone 1		1	UEPPX	UECD1	16.68										
	2-Wire Analog Voice Grade Loop - (SL2) - UNE Zone 2		2	UEPPX	UECD1	23.13										
	2-Wire Analog Voice Grade Loop - (SL2) - UNE Zone 3		3	UEPPX	UECD1	28.46										
	UNE Port Rate															
	Exchange Ports - 2-Wire DID Port			UEPPX	UEPD1	7.06	225.55	87.21	113.08	14.38						
	NONRECURRING CHARGES - CURRENTLY COMBINED															
	2-Wire Voice Grade Loop / 2-Wire DID Trunk Port Combination - Switch-as-is			UEPPX	USAC1		7.32	1.87								
	2-Wire Voice Grade Loop / 2-Wire DID Trunk Port Conversion with BellSouth Allowable Changes			UEPPX	USA1C		7.32	1.87								
	ADDITIONAL NRCs															
	2-Wire DID Subsequent Activity - Add Trunks, Per Trunk			UEPPX	USAS1		26.84									
	Unbundled Miscellaneous Rate Element, Tag Designed Loop at End User Premise			UEPPX	URETN		11.24	1.10								
	Telephone Number/Trunk Group Establisment Charges															
	DID Trunk Termination (One Per Port)			UEPPX	NDT	0.00	0.00	0.00								
	DID Numbers, Establish Trunk Group and Provide First Group of 20 DID Numbers			UEPPX	NDZ	0.00	0.00	0.00								
	Additional DID Numbers for each Group of 20 DID Numbers			UEPPX	ND4	0.00	0.00	0.00								
	DID Numbers, Non- consecutive DID Numbers , Per Number			UEPPX	ND5	0.00	0.00	0.00								
	Reserve Non-Consecutive DID numbers			UEPPX	ND6	0.00	0.00	0.00								
	Reserve DID Numbers			UEPPX	NDV	0.00	0.00	0.00								
	LOCAL NUMBER PORTABILITY															
	Local Number Portability (1 per port)			UEPPX	LNPCP	3.15	0.00	0.00								
	2-WIRE ISDN DIGITAL GRADE LOOP WITH 2-WIRE ISDN DIGITAL LINE SIDE PORT															
	UNE Port/Loop Combination Rates															
	2W ISDN Digital Grade Loop/2W ISDN Digital Line Side Port - UNE Zone 1		1	UEPPB UEPPR		30.86										
	2W ISDN Digital Grade Loop/2W ISDN Digital Line Side Port - UNE Zone 2		2	UEPPB UEPPR		38.60										
	2W ISDN Digital Grade Loop/2W ISDN Digital Line Side Port - UNE Zone 3		3	UEPPB UEPPR		44.23										
	UNE Loop Rates															
	2-Wire ISDN Digital Grade Loop - UNE Zone 1		1	UEPPB UEPPR	USL2X	21.90										
	2-Wire ISDN Digital Grade Loop - UNE Zone 2		2	UEPPB UEPPR	USL2X	29.64										
	2-Wire ISDN Digital Grade Loop - UNE Zone 3		3	UEPPB UEPPR	USL2X	35.27										
	UNE Port Rate															
	Exchange Port - 2-Wire ISDN Line Side Port			UEPPB UEPPR	UEPPB	8.96	190.51	133.14	100.95	21.37						
	NONRECURRING CHARGES - CURRENTLY COMBINED															
	2-Wire ISDN Digital Grade Loop / 2-Wire ISDN Line Side Port Combination - Conversion			UEPPB UEPPR	USACB	0.00	38.59	27.08								
	ADDITIONAL NRCs															
	Unbundled Miscellaneous Rate Element, Tag Designed Loop at End User Premise			UEPPB UEPPR	URETN		11.24	1.10								
	Unbundled Miscellaneous Rate Element, Tag Loop at End User Premise			UEPPB UEPPR	URETL		8.33	0.83								
	LOCAL NUMBER PORTABILITY															
	Local Number Portability (1 per port)			UEPPB UEPPR	LNPCX	0.35	0.00	0.00								
	B-CHANNEL USER PROFILE ACCESS:															
	CVS/CSD (DMS/5ESS)			UEPPB UEPPR	U1UCA	0.00	0.00	0.00								
	CVS (EWSD)			UEPPB UEPPR	U1UCB	0.00	0.00	0.00								
	CSD			UEPPB UEPPR	U1UCC	0.00	0.00	0.00								
	B-CHANNEL AREA PLUS USER PROFILE ACCESS: (AL,KY,LA,MS SC,MS, & TN)															

UNBUNDLED NETWORK ELEMENTS - South Carolina

CATEGORY	RATE ELEMENTS	Interim	Zone	BCS	USOC	RATES ($) Rec	Nonrecurring First	Nonrecurring Add'l	Nonrecurring Disconnect First	Nonrecurring Disconnect Add'l	Svc Order Submitted Elec per LSR	Svc Order Submitted Manually per LSR	Attachment: 2 Incremental Charge - Manual Svc Order vs. Electronic- 1st	Attachment: 2 Incremental Charge - Manual Svc Order vs. Electronic- Add'l	Exhibit: A Incremental Charge - Manual Svc Order vs. Electronic- Disc 1st	Exhibit: A Incremental Charge - Manual Svc Order vs. Electronic- Disc Add'l
											OSS Rates ($)					
											SOMEC	SOMAN	SOMAN	SOMAN	SOMAN	SOMAN
	CVS/CSD (DMS/5ESS)			UEPPB UEPPR	U1UCD	0.00	0.00	0.00								
	CVS (EWSD)			UEPPB UEPPR	U1UCE	0.00	0.00	0.00								
	CSD			UEPPB UEPPR	U1UCF	0.00	0.00	0.00								
USER TERMINAL PROFILE																
	User Terminal Profile (EWSD only)			UEPPB UEPPR	U1UMA	0.00	0.00	0.00								
VERTICAL FEATURES																
	All Vertical Features - One per Channel B User Profile			UEPPB UEPPR	UEPVF	3.04	0.00	0.00								
INTEROFFICE CHANNEL MILEAGE																
	Interoffice Channel mileage each, including first mile and facilities termination			UEPPB UEPPR	M1GNC	24.30	40.63	27.47	16.77	6.91						
	Interoffice Channel mileage each, additional mile			UEPPB UEPPR	M1GNM	0.0167	0.00	0.00								
4-WIRE DS1 DIGITAL LOOP WITH 4-WIRE ISDN DS1 DIGITAL TRUNK PORT																
The UNE-P DS1 combination rates below for in this rate exhibit apply to the embedded base in place as of 10/2/03 until 4/1/04. After 4/1/04 these rates shall revert to tariff rates or a separate commercial agreement.																
Requests for 4-Wire DS1 Digital Loop with 4-Wire ISDN DS1 Digital Trunk Port after the effective date of this amendment shall be provided pursuant to a separate agreement or tariff at BellSouth's discretion.																
UNE Port/Loop Combination Rates																
	4W DS1 Digital Loop/4W ISDN DS1 Digital Trunk Port - UNE Zone 1		1	UEPPP		176.82										
	4W DS1 Digital Loop/4W ISDN DS1 Digital Trunk Port - UNE Zone 2		2	UEPPP		241.38										
	4W DS1 Digital Loop/4W ISDN DS1 Digital Trunk Port - UNE Zone 3		3	UEPPP		347.84										
UNE Loop Rates																
	4-Wire DS1 Digital Loop - UNE Zone 1		1	UEPPP	USL4P	90.87										
	4-Wire DS1 Digital Loop - UNE Zone 2		2	UEPPP	USL4P	155.43										
	4-Wire DS1 Digital Loop - UNE Zone 3		3	UEPPP	USL4P	261.89										
UNE Port Rate																
	Exchange Ports - 4-Wire ISDN DS1 Port (E:4/1/2004)			UEPPP	UEPPP	85.95	457.30	259.67	124.15	31.83						
NONRECURRING CHARGES - CURRENTLY COMBINED																
	4-Wire DS1 Digital Loop / 4-Wire ISDN DS1 Digital Trunk Port Combination - Conversion -Switch-as-is (E:4/1/2004)			UEPPP	USACP	0.00	119.34	78.73								
ADDITIONAL NRCs																
	4-Wire DS1 Loop/4-W ISDN Digtl Trk Port - Subsqt Actvy-Inward/two way Tel Nos. (except NC)			UEPPP	PR7TF		0.49	0.49								
	4-Wire DS1 Loop / 4-Wire ISDN DS1 Digital Trunk Port - Outward Tel Numbers (All States except NC)			UEPPP	PR7TO		11.54	11.54								
	4-Wire DS1 Loop / 4-Wire ISDN DS1 Digital Trk Port - Subsequent Inward Tel Numbers			UEPPP	PR7ZT		23.07	23.07								
LOCAL NUMBER PORTABILITY																
	Local Number Portability (1 per port)			UEPPP	LNPCN	1.75										
	Voice/Data			UEPPP	PR71V	0.00	0.00	0.00								
	Digital Data			UEPPP	PR71D	0.00	0.00	0.00								
	Inward Data			UEPPP	PR71E	0.00	0.00	0.00								
New or Additional "B" Channel																
	New or Additional - Voice/Data B Channel			UEPPP	PR7BV	0.00	14.56									
	New or Additional - Digital Data B Channel			UEPPP	PR7BF	0.00	14.56									
	New or Additional Inward Data B Channel			UEPPP	PR7BD	0.00	14.56									
CALL TYPES																
	Inward			UEPPP	PR7C1	0.00	0.00	0.00								
	Outward			UEPPP	PR7CO	0.00	0.00	0.00								
	Two-way			UEPPP	PR7CC	0.00	0.00	0.00								
Interoffice Channel Mileage																
	Fixed Each Including First Mile			UEPPP	1LN1A	77.4815	89.47	81.99	16.39	14.48						
	Each Airline-Fractional Additional Mile			UEPPP	1LN1B	0.3415										
4-WIRE DS1 DIGITAL LOOP WITH 4-WIRE DDITS TRUNK PORT																
The UNE-P DS1 combination rates below for in this rate exhibit apply to the embedded base in place as of 10/2/03 until 4/1/04. After 4/1/04 these rates shall revert to tariff rates or a separate commercial agreement.																
Requests for 4-Wire DS1 Digital Loop with 4-Wire DDITS after the effective date of this amendment shall be provided pursuant to a separate agreement or tariff at BellSouth's discretion.																
UNE Port/Loop Combination Rates																
	4W DS1 Digital Loop/4W DDITS Trunk Port - UNE Zone 1		1	UEPDC		149.77										
	4W DS1 Digital Loop/4W DDITS Trunk Port - UNE Zone 2		2	UEPDC		214.33										

UNBUNDLED NETWORK ELEMENTS - South Carolina														Attachment: 2		Exhibit: A	
CATEGORY	RATE ELEMENTS	Interim	Zone	BCS	USOC	RATES ($)					Svc Order Submitted Elec per LSR	Svc Order Submitted Manually per LSR	Incremental Charge - Manual Svc Order vs. Electronic-1st	Incremental Charge - Manual Svc Order vs. Electronic-Add'l	Incremental Charge - Manual Svc Order vs. Electronic-Disc 1st	Incremental Charge - Manual Svc Order vs. Electronic-Disc Add'l
						Rec	Nonrecurring		Nonrecurring Disconnect		OSS Rates ($)					
							First	Add'l	First	Add'l	SOMEC	SOMAN	SOMAN	SOMAN	SOMAN	SOMAN
	4W DS1 Digital Loop/4W DDITS Trunk Port - UNE Zone 3		3	UEPDC		320.78										
UNE Loop Rates																
	4-Wire DS1 Digital Loop - UNE Zone 1		1	UEPDC	USLDC	90.87										
	4-Wire DS1 Digital Loop - UNE Zone 2		2	UEPDC	USLDC	155.43										
	4-Wire DS1 Digital Loop - UNE Zone 3		3	UEPDC	USLDC	261.89										
UNE Port Rate																
	4-Wire DDITS Digital Trunk Port (E:4/1/2004)			UEPDC	UDD1T	58.90	455.50	253.79	117.55	14.20						
NONRECURRING CHARGES - CURRENTLY COMBINED																
	4-Wire DS1 Digital Loop / 4-Wire DDITS Trunk Port Combination - Switch-as-is (E:4/1/2004)			UEPDC	USAC4		129.78	67.17								
	4-Wire DS1 Digital Loop / 4-Wire DDITS Trunk Port Combination - Conversion with DS1 Changes (E:4/1/2004)			UEPDC	USAWA		129.78	67.17								
	4-Wire DS1 Digital Loop / 4-Wire DDITS Trunk Port Combination - Conversion with Change - Trunk (E:4/1/2004)			UEPDC	USAWB		129.78	67.17								
ADDITIONAL NRCs																
	4-Wire DS1 Loop / 4-Wire DDITS Trunk Port - NRC - Subsequent Channel Activation/Chan - 2-Way Trunk			UEPDC	UDTTA		14.51	14.51								
	4-Wire DS1 Loop / 4-Wire DDITS Trunk Port - Subsequent Channel Activation/Chan - 1-Way Outward Trunk			UEPDC	UDTTB		14.51	14.51								
	4-Wire DS1 Loop / 4-Wire DDITS Trunk Port - Subsqnt Channel Activation/Chan Inward Trunk w/out DID			UEPDC	UDTTC		14.51	14.51								
	4-Wire DS1 Loop / 4-Wire DDITS Trunk Port - Subsqnt Chan Activation Per Chan - Inward Trunk with DID			UEPDC	UDTTD		14.51	14.51								
	4-Wire DS1 Loop / 4-Wire DDITS Trunk Port - Subsqnt Chan Activation / Chan - 2-Way DID w User Trans			UEPDC	UDTTE		14.51	14.51								
BIPOLAR 8 ZERO SUBSTITUTION																
	B8ZS -Superframe Format			UEPDC	CCOSF		0.00i	605.00s								
	B8ZS - Extended Superframe Format			UEPDC	CCOEF		0.00i	605.00s								
Alternate Mark Inversion																
	AMI -Superframe Format			UEPDC	MCOSF		0.00	0.00								
	AMI - Extended SuperFrame Format			UEPDC	MCOPO		0.00	0.00								
Telephone Number/Trunk Group Establisment Charges																
	Telephone Number for 2-Way Trunk Group			UEPDC	UDTGX	0.00										
	Telephone Number for 1-Way Outward Trunk Group			UEPDC	UDTGY	0.00										
	Telephone Number for 1-Way Inward Trunk Group Without DID			UEPDC	UDTGZ	0.00										
	DID Numbers, Establish Trunk Group and Provide First Group of 20 DID Numbers			UEPDC	NDZ	0.00	0.00	0.00								
	DID Numbers for each Group of 20 DID Numbers			UEPDC	ND4	0.00										
	DID Numbers, Non- consecutive DID Numbers , Per Number			UEPDC	ND5	0.00	0.00	0.00								
	Reserve Non-Consecutive DID Nos.			UEPDC	ND6	0.00	0.00	0.00								
	Reserve DID Numbers			UEPDC	NDV	0.00	0.00	0.00								
Dedicated DS1 (Interoffice Channel Mileage) - FX/FCO for 4-Wire DS1 Digital Loop with 4-Wire DDITS Trunk Port																
	Interoffice Channel Mileage - Fixed rate 0-8 miles (Facilities Termination)			UEPDC	1LNO1	77.14	89.47	81.99	16.39	14.48						
	Interoffice Channel Mileage - Additional rate per mile - 0-8 miles			UEPDC	1LNOA	0.3415	0.00	0.00								
	Interoffice Channel Mileage - Fixed rate 9-25 miles (Facilities Termination)			UEPDC	1LNO2	0.00	0.00	0.00								
	Interoffice Channel Mileage - Additional rate per mile - 9-25 miles			UEPDC	1LNOB	0.3415	0.00	0.00								
	Interoffice Channel Mileage - Fixed rate 25+ miles (Facilities Termination)			UEPDC	1LNO3	0.00	0.00	0.00								
	Interoffice Channel Mileage - Additional rate per mile - 25+ miles			UEPDC	1LNOC	0.3415	0.00	0.00								
	Local Number Portability, per DS0 Activated			UEPDC	LNPCP	3.15	0.00	0.00								
	Central Office Termininating Point			UEPDC	CTG	0.00										
4-WIRE DS1 LOOP WITH CHANNELIZATION WITH PORT																
System is 1 DS1 Loop, 1 D4 Channel Bank, and up to 24 Feature Activations																
Each System can have up to 24 combinations of rates depending on type and number of ports used																

UNBUNDLED NETWORK ELEMENTS - South Carolina													Attachment: 2		Exhibit: A	
CATEGORY	RATE ELEMENTS	Interim	Zone	BCS	USOC	RATES ($)					Svc Order Submitted Elec per LSR	Svc Order Submitted Manually per LSR	Incremental Charge - Manual Svc Order vs. Electronic-1st	Incremental Charge - Manual Svc Order vs. Electronic-Add'l	Incremental Charge - Manual Svc Order vs. Electronic-Disc 1st	Incremental Charge - Manual Svc Order vs. Electronic-Disc Add'l
						Rec	Nonrecurring		Nonrecurring Disconnect		OSS Rates ($)					
							First	Add'l	First	Add'l	SOMEC	SOMAN	SOMAN	SOMAN	SOMAN	SOMAN
	The UNE-P DS1 combination rates below for 4-Wire DS1 Loop with Channelization with Port in this rate exhibit apply to the embedded base in place as of 10/2/03 until 4/1/04. After 4/1/04 these rates shall revert to tariff rates or a separate agreement.															
	Requests for 4-Wire DS1 Loop with Channelization with Port after the effective date of this amendment shall be provided pursuant to a separate agreement or tariff at BellSouth's discretion.															
	UNE DS1 Loop															
	4-Wire DS1 Loop - UNE Zone 1		1	UEPMG	USLDC	90.87	0.00	0.00								
	4-Wire DS1 Loop - UNE Zone 2		2	UEPMG	USLDC	155.43	0.00	0.00								
	4-Wire DS1 Loop - UNE Zone 3		3	UEPMG	USLDC	261.89	0.00	0.00								
	UNE DSO Channelization Capacities (D4 Channel Bank Configurations)															
	24 DSO Channel Capacity - 1 per DS1			UEPMG	VUM24	82.78	0.00	0.00								
	48 DSO Channel Capacity - 1 per 2 DS1s			UEPMG	VUM48	165.56	0.00	0.00								
	96 DSO Channel Capacity -1per 4 DS1s			UEPMG	VUM96	331.12	0.00	0.00								
	144 DS0 Channel Capacity - 1 per 6 DS1s			UEPMG	VUM14	496.68	0.00	0.00								
	192 DS0 Channel Capacity -1 per 8 DS1s			UEPMG	VUM19	662.24	0.00	0.00								
	240 DS0 Channel Capacity - 1 per 10 DS1s			UEPMG	VUM2O	827.80	0.00	0.00								
	288 DS0 Channel Capacity - 1 per 12 DS1s			UEPMG	VUM28	993.36	0.00	0.00								
	384 DS0 Channel Capacity - 1 per 16 DS1s			UEPMG	VUM38	1,324.48	0.00	0.00								
	480 DS0 Channel Capacity - 1 per 20 DS1s			UEPMG	VUM4O	1,655.60	0.00	0.00								
	576 DS0 Channel Capacity -1 per 24 DS1s			UEPMG	VUM57	1,986.72	0.00	0.00								
	672 DS0 Channel Capacity - 1 per 28 DS1s			UEPMG	VUM67	2,317.84	0.00	0.00								
	Non-Recurring Charges (NRC) Associated with 4-Wire DS1 Loop with Channeliztion with Port - Conversion Charge Based on a System															
	A Minimum System configuration is One (1) DS1, One (1) D4 Channel Bank, and Up To 24 DSO Ports with Feature Activations.															
	Multiples of this configuration functioning as one are considered Add'l after the minimum system configuration is counted.															
	NRC - Conversion (Currently Combined) with or without BellSouth Allowed Changes			UEPMG	USAC4	0.00	150.81	8.38								
	System Additions at End User Locations Where 4-Wire DS1 Loop with Channelization with Port Combination Currently Exists and															
	New (Not Currently Combined) in all states, except in Density Zone 1 of Top 8 MSA's															
	1 DS1/D4 Channel Bank - Additionally Add NRC for each Port and Assoc Fea Activation (E:4/1/2004)			UEPMG	VUMD4	0.00	717.71	425.81	149.08	17.69						
	Bipolar 8 Zero Substitution															
	Clear Channel Capability Format, superframe - Subsequent Activity Only			UEPMG	CCOSF	0.00	0.00i	605.00s								
	Clear Channel Capability Format - Extended Superframe - Subsequent Activity Only			UEPMG	CCOEF	0.00	0.00i	605.00s								
	Alternate Mark Inversion (AMI)															
	Superframe Format			UEPMG	MCOSF	0.00	0.00	0.00								
	Extended Superframe Format			UEPMG	MCOPO	0.00	0.00	0.00								
	Exchange Ports Associated with 4-Wire DS1 Loop with Channelization with Port															
	Exchange Ports															
	Line Side Combination Channelized PBX Trunk Port - Business (E:4/1/2004)			UEPPX	UEPCX	1.13	0.00	0.00	0.00	0.00						
	Line Side Outward Channelized PBX Trunk Port - Business (E:4/1/2004)			UEPPX	UEPOX	1.13	0.00	0.00	0.00	0.00						
	Line Side Inward Only Channelized PBX Trunk Port without DID (E:4/1/2004)			UEPPX	UEP1X	1.13	0.00	0.00	0.00	0.00						
	2-Wire Trunk Side Unbundled Channelized DID Trunk Port (E:4/1/2004)			UEPPX	UEPDM	7.09	0.00	0.00	0.00	0.00						
	Feature Activations - Unbundled Loop Concentration															
	Feature (Service) Activation for each Line Port Terminated in D4 Bank			UEPPX	1PQWM	0.56	25.45	13.44	4.20	4.17						
	Feature (Service) Activation for each Trunk Port Terminated in D4 Bank			UEPPX	1PQWU	0.56	78.31	18.46	59.37	11.60						
	Telephone Number/ Group Establishment Charges for DID Service															
	DID Trunk Termination (1 per Port)			UEPPX	NDT	0.00	0.00	0.00								
	Estab Trk Grp and Provide 1st 20 DID Nos. (FL,GA, NC,& SC)			UEPPX	NDZ	0.00	0.00	0.00								
	DID Numbers - groups of 20 - Valid all States			UEPPX	ND4	0.00	0.00	0.00								
	Non-Consecutive DID Numbers - per number			UEPPX	ND5	0.00	0.00	0.00								
	Reserve Non-Consecutive DID Numbers			UEPPX	ND6	0.00	0.00	0.00								
	Reserve DID Numbers			UEPPX	NDV	0.00	0.00	0.00								
	Local Number Portability															
	Local Number Portability - 1 per port			UEPPX	LNPCP	3.15	0.00	0.00								

UNBUNDLED NETWORK ELEMENTS - South Carolina													Attachment: 2		Exhibit: A	
CATEGORY	RATE ELEMENTS	Interim	Zone	BCS	USOC	RATES ($)					Svc Order Submitted Elec per LSR	Svc Order Submitted Manually per LSR	Incremental Charge - Manual Svc Order vs. Electronic-1st	Incremental Charge - Manual Svc Order vs. Electronic-Add'l	Incremental Charge - Manual Svc Order vs. Electronic-Disc 1st	Incremental Charge - Manual Svc Order vs. Electronic-Disc Add'l
						Rec	Nonrecurring		Nonrecurring Disconnect		OSS Rates ($)					
							First	Add'l	First	Add'l	SOMEC	SOMAN	SOMAN	SOMAN	SOMAN	SOMAN
	FEATURES - Vertical and Optional															
	Local Switching Features Offered with Line Side Ports Only															
	All Features Available			UEPPX	UEPVF	3.04	0.00	0.00								
UNBUNDLED CENTREX PORT/LOOP COMBINATIONS - COST BASED RATES																
	1. Cost Based Rates are applied where BellSouth is required by FCC and/or State Commission rule to provide Unbundled Local Switching or Switch Ports.															
	2. Features shall apply to the Unbundled Port/Loop Combination - Cost Based Rate section in the same manner as they are applied to the Stand-Alone Unbundled Port section of this Rate Exhibit.															
	3. End Office and Tandem Switching Usage and Common Transport Usage rates in the Port section of this rate exhibit shall apply to all combinations of loop/port network elements except for UNE Coin Port/Loop Combinations.															
	4. The first and additional Port nonrecurring charges apply to Not Currently Combined Combos. For Currently Combined Combos, the nonrecurring charges shall be those identified in the Nonrecurring - Currently Combined sections. Additional NRCs may apply also and are categorized accordingly.															
	5. Market Rates for Unbundled Centrex Port/Loop Combination will be negotiated on an Individual Case Basis, until further notice.															
	UNE-P CENTREX - 5ESS (Valid in All States)															
	2-Wire VG Loop/2-Wire Voice Grade Port (Centrex) Combo															
	UNE Port/Loop Combination Rates (Non-Design)															
	2-Wire VG Loop/2-Wire Voice Grade Port (Centrex) Port Combo - Non-Design		1	UEP95		14.89										
	2-Wire VG Loop/2-Wire Voice Grade Port (Centrex)Port Combo - Non-Design		2	UEP95		21.52										
	2-Wire VG Loop/2-Wire Voice Grade Port (Centrex)Port Combo - Non-Design		3	UEP95		27.17										
	UNE Port/Loop Combination Rates (Design)															
	2-Wire VG Loop/2-Wire Voice Grade Port (Centrex) Port Combo - Design		1	UEP95		17.81										
	2-Wire VG Loop/2-Wire Voice Grade Port (Centrex)Port Combo - Design		2	UEP95		24.26										
	2-Wire VG Loop/2-Wire Voice Grade Port (Centrex)Port Combo - Design		3	UEP95		29.59										
	UNE Loop Rate															
	2-Wire Voice Grade Loop (SL 1) - Zone 1		1	UEP95	UECS1	13.76										
	2-Wire Voice Grade Loop (SL 1) - Zone 2		2	UEP95	UECS1	20.38										
	2-Wire Voice Grade Loop (SL 1) - Zone 3		3	UEP95	UECS1	26.04										
	2-Wire Voice Grade Loop (SL 2) - Zone 1		1	UEP95	UECS2	16.68										
	2-Wire Voice Grade Loop (SL 2) - Zone 2		2	UEP95	UECS2	23.13										
	2-Wire Voice Grade Loop (SL 2) - Zone 3		3	UEP95	UECS2	28.46										
	UNE Port Rate															
	All States															
	2-Wire Voice Grade Port (Centrex) Basic Local Area			UEP95	UEPYA	1.13	40.30	19.90	24.98	6.65						
	2-Wire Voice Grade Port (Centrex 800 termination)			UEP95	UEPYB	1.13	40.30	19.90	24.98	6.65						
	2-Wire Voice Grade Port (Centrex with Caller ID)1Basic Local Area			UEP95	UEPYH	1.13	40.30	19.90	24.98	6.65						
	2-Wire Voice Grade Port (Centrex from diff Serving Wire Center)2,3 Basic Local Area			UEP95	UEPYM	1.13	108.36	70.71	54.47	11.94						
	2-Wire Voice Grade Port, Diff Serving Wire Center 2,3 - 800 Service Term - Basic Local Area			UEP95	UEPYZ	1.13	108.36	70.71	54.47	11.94						
	2-Wire Voice Grade Port terminated in on Megalink or equivalent - Basic Local Area			UEP95	UEPY9	1.13	40.30	19.90	24.98	6.65						
	2-Wire Voice Grade Port Terminated on 800 Service Term - Basic Local Area			UEP95	UEPY2	1.13	40.30	19.90	24.98	6.65						
	AL, KY, LA, MS, SC, & TN Only															
	2-Wire Voice Grade Port (Centrex)			UEP95	UEPQA	1.13	40.30	19.90	24.98	6.65						
	2-Wire Voice Grade Port (Centrex 800 termination)			UEP95	UEPQB	1.13	40.30	19.90	24.98	6.65						
	2-Wire Voice Grade Port (Centrex with Caller ID)1			UEP95	UEPQH	1.13	40.30	19.90	24.98	6.65						
	2-Wire Voice Grade Port (Centrex from diff Serving Wire Center)2,3			UEP95	UEPQM	1.13	108.36	70.71	54.47	11.94						
	2-Wire Voice Grade Port, Diff Serving Wire Center - 800 Service Term 2,3			UEP95	UEPQZ	1.13	108.36	70.71	54.47	11.94						
	2-Wire Voice Grade Port terminated in on Megalink or equivalent			UEP95	UEPQ9	1.13	40.30	19.90	24.98	6.65						
	2-Wire Voice Grade Port Terminated on 800 Service Term			UEP95	UEPQ2	1.13	40.30	19.90	24.98	6.65						
	Local Switching															

UNBUNDLED NETWORK ELEMENTS - South Carolina														Attachment: 2		Exhibit: A	
CATEGORY	RATE ELEMENTS	Interim	Zone	BCS	USOC	RATES ($)					Svc Order Submitted Elec per LSR	Svc Order Submitted Manually per LSR	Incremental Charge - Manual Svc Order vs. Electronic-1st	Incremental Charge - Manual Svc Order vs. Electronic-Add'l	Incremental Charge - Manual Svc Order vs. Electronic-Disc 1st	Incremental Charge - Manual Svc Order vs. Electronic-Disc Add'l
						Rec	Nonrecurring		Nonrecurring Disconnect		OSS Rates ($)					
							First	Add'l	First	Add'l	SOMEC	SOMAN	SOMAN	SOMAN	SOMAN	SOMAN
	Centrex Intercom Funtionality, per port			UEP95	URECS	0.7996										
Local Number Portability																
	Local Number Portability (1 per port)			UEP95	LNPCC	0.35										
Features																
	All Standard Features Offered, per port			UEP95	UEPVF	3.04										
	All Select Features Offered, per port			UEP95	UEPVS	0.00	406.42									
	All Centrex Control Features Offered, per port			UEP95	UEPVC	3.04										
NARS																
	Unbundled Network Access Register - Combination			UEP95	UARCX	0.00	0.00	0.00	0.00	0.00						
	Unbundled Network Access Register - Indial			UEP95	UAR1X	0.00	0.00	0.00	0.00	0.00						
	Unbundled Network Access Register - Outdial			UEP95	UAROX	0.00	0.00	0.00	0.00	0.00						
Miscellaneous Terminations																
2-Wire Trunk Side																
	Trunk Side Terminations, each			UEP95	CEND6	8.86	119.57	18.78	60.03	3.77						
4-Wire Digital (1.544 Megabits)																
	DS1 Circuit Terminations, each			UEP95	M1HD1	73.62	202.47	95.90	72.75	2.47						
	DS0 Channels Activated, each			UEP95	M1HDO	0.00	14.51									
Interoffice Channel Mileage - 2-Wire																
	Interoffice Channel Facilities Termination			UEP95	M1GBC	24.30	40.63	27.47	16.77	6.91						
	Interoffice Channel mileage, per mile or fraction of mile			UEP95	M1GBM	0.0167										
Feature Activations (DS0) Centrex Loops on Channelized DS1 Service																
D4 Channel Bank Feature Activations																
	Feature Activation on D-4 Channel Bank Centrex Loop Slot			UEP95	1PQWS	0.56										
	Feature Activation on D-4 Channel Bank FX line Side Loop Slot			UEP95	1PQW6	0.56										
	Feature Activation on D-4 Channel Bank FX Trunk Side Loop Slot			UEP95	1PQW7	0.56										
	Feature Activation on D-4 Channel Bank Centrex Loop Slot - Different Wire Center			UEP95	1PQWP	0.56										
	Feature Activation on D-4 Channel Bank Private Line Loop Slot			UEP95	1PQWV	0.56										
	Feature Activation on D-4 Channel Bank Tjie Line/Trunk Loop Slot			UEP95	1PQWQ	0.56										
	Feature Activation on D-4 Channel Bank WATS Loop Slot			UEP95	1PQWA	0.56										
Non-Recurring Charges (NRC) Associated with UNE-P Centrex																
	NRC Conversion Currently Combined Switch-As-Is with allowed changes, per port			UEP95	USAC2		37.93	16.72								
	New Centrex Standard Common Block			UEP95	M1ACS	0.00	668.70									
	New Centrex Customized Common Block			UEP95	M1ACC	0.00	668.70									
	NAR Establishment Charge, Per Occasion			UEP95	URECA	0.00	72.89									
Additional Non-Recurring Charges (NRC)																
	Unbundled Miscellaneous Rate Element, Tag Loop at End Use Premise			UEP95	URETL		8.33	0.83								
	Unbundled Miscellaneous Rate Element, Tag Design Loop at End Use Premise			UEP95	URETN		11.24	1.10								
UNE-P CENTREX - DMS100 (Valid in All States)																
2-Wire VG Loop/2-Wire Voice Grade Port (Centrex) Combo																
UNE Port/Loop Combination Rates (Non-Design)																
	2-Wire VG Loop/2-Wire Voice Grade Port (Centrex) Port Combo - Non-Design		1	UEP9D		14.89										
	2-Wire VG Loop/2-Wire Voice Grade Port (Centrex)Port Combo - Non-Design		2	UEP9D		21.52										
	2-Wire VG Loop/2-Wire Voice Grade Port (Centrex)Port Combo - Non-Design		3	UEP9D		27.17										
UNE Port/Loop Combination Rates (Design)																
	2-Wire VG Loop/2-Wire Voice Grade Port (Centrex) Port Combo - Design		1	UEP9D		17.81										
	2-Wire VG Loop/2-Wire Voice Grade Port (Centrex)Port Combo - Design		2	UEP9D		24.26										

UNBUNDLED NETWORK ELEMENTS - South Carolina														Attachment: 2		Exhibit: A	
CATEGORY		RATE ELEMENTS	Interim	Zone	BCS	USOC	RATES ($)					Svc Order Submitted Elec per LSR	Svc Order Submitted Manually per LSR	Incremental Charge - Manual Svc Order vs. Electronic-1st	Incremental Charge - Manual Svc Order vs. Electronic-Add'l	Incremental Charge - Manual Svc Order vs. Electronic-Disc 1st	Incremental Charge - Manual Svc Order vs. Electronic-Disc Add'l
							Rec	Nonrecurring		Nonrecurring Disconnect		OSS Rates ($)					
								First	Add'l	First	Add'l	SOMEC	SOMAN	SOMAN	SOMAN	SOMAN	SOMAN
		2-Wire VG Loop/2-Wire Voice Grade Port (Centrex)Port Combo - Design		3	UEP9D		29.59										
	UNE Loop Rate																
		2-Wire Voice Grade Loop (SL 1) - Zone 1		1	UEP9D	UECS1	13.76										
		2-Wire Voice Grade Loop (SL 1) - Zone 2		2	UEP9D	UECS1	20.38										
		2-Wire Voice Grade Loop (SL 1) - Zone 3		3	UEP9D	UECS1	26.04										
		2-Wire Voice Grade Loop (SL 2) - Zone 1		1	UEP9D	UECS2	16.68										
		2-Wire Voice Grade Loop (SL 2) - Zone 2		2	UEP9D	UECS2	23.13										
		2-Wire Voice Grade Loop (SL 2) - Zone 3		3	UEP9D	UECS2	28.46										
	UNE Port Rate																
	ALL STATES																
		2-Wire Voice Grade Port (Centrex) Basic Local Area			UEP9D	UEPYA	1.13	40.30	19.90	24.98	6.65						
		2-Wire Voice Grade Port (Centrex 800 termination)Basic Local Area			UEP9D	UEPYB	1.13	40.30	19.90	24.98	6.65						
		2-Wire Voice Grade Port (Centrex / EBS-PSET)3Basic Local Area			UEP9D	UEPYC	1.13	40.30	19.90	24.98	6.65						
		2-Wire Voice Grade Port (Centrex / EBS-M5009)3Basic Local Area			UEP9D	UEPYD	1.13	40.30	19.90	24.98	6.65						
		2-Wire Voice Grade Port (Centrex / EBS-M5209))3 Basic Local Area			UEP9D	UEPYE	1.13	40.30	19.90	24.98	6.65						
		2-Wire Voice Grade Port (Centrex / EBS-M5112))3 Basic Local Area			UEP9D	UEPYF	1.13	40.30	19.90	24.98	6.65						
		2-Wire Voice Grade Port (Centrex / EBS-M5312))3Basic Local Area			UEP9D	UEPYG	1.13	40.30	19.90	24.98	6.65						
		2-Wire Voice Grade Port (Centrex / EBS-M5008))3 Basic Local Area			UEP9D	UEPYT	1.13	40.30	19.90	24.98	6.65						
		2-Wire Voice Grade Port (Centrex / EBS-M5208))3 Basic Local Area			UEP9D	UEPYU	1.13	40.30	19.90	24.98	6.65						
		2-Wire Voice Grade Port (Centrex / EBS-M5216))3 Basic Local Area			UEP9D	UEPYV	1.13	40.30	19.90	24.98	6.65						
		2-Wire Voice Grade Port (Centrex / EBS-M5316))3 Basic Local Area			UEP9D	UEPY3	1.13	40.30	19.90	24.98	6.65						
		2-Wire Voice Grade Port (Centrex with Caller ID) Basic Local Area			UEP9D	UEPYH	1.13	40.30	19.90	24.98	6.65						
		2-Wire Voice Grade Port (Centrex/Caller ID/Msg Wtg Lamp Indication))4 Basic Local Area			UEP9D	UEPYW	1.13	40.30	19.90	24.98	6.65						
		2-Wire Voice Grade Port (Centrex/Msg Wtg Lamp Indication))4 Basic Local Area			UEP9D	UEPYJ	1.13	40.30	19.90	24.98	6.65						
		2-Wire Voice Grade Port (Centrex from diff Serving Wire Center) 2,3-Basic Local Area			UEP9D	UEPYM	1.13	108.36	70.71	54.47	11.94						
		2-Wire Voice Grade Port (Centrex/differ SWC /EBS-PSET)2,3,4 Basic Local Area			UEP9D	UEPYO	1.13	108.36	70.71	54.47	11.94						
		2-Wire Voice Grade Port (Centrex/differ SWC /EBS-M5009)2,3,4 Basic Local Area			UEP9D	UEPYP	1.13	108.36	70.71	54.47	11.94						
		2-Wire Voice Grade Port (Centrex/differ SWC /EBS-5209)2,3,4 Basic Local Area			UEP9D	UEPYQ	1.13	108.36	70.71	54.47	11.94						
		2-Wire Voice Grade Port (Centrex/differ SWC /EBS-M5112)2,3,4 Basic Local Area			UEP9D	UEPYR	1.13	108.36	70.71	54.47	11.94						
		2-Wire Voice Grade Port (Centrex/differ SWC /EBS-M5312)2,3,4 Basic Local Area			UEP9D	UEPYS	1.13	108.36	70.71	54.47	11.94						
		2-Wire Voice Grade Port (Centrex/differ SWC /EBS-M5008)2,3,4 Basic Local Area			UEP9D	UEPY4	1.13	108.36	70.71	54.47	11.94						
		2-Wire Voice Grade Port (Centrex/differ SWC /EBS-M5208)2, 3 Basic Local Area			UEP9D	UEPY5	1.13	108.36	70.71	54.47	11.94						
		2-Wire Voice Grade Port (Centrex/differ SWC /EBS-M5216)2,3,4 Basic Local Area			UEP9D	UEPY6	1.13	108.36	70.71	54.47	11.94						
		2-Wire Voice Grade Port (Centrex/differ SWC /EBS-M5316)2,3,4 Basic Local Area			UEP9D	UEPY7	1.13	108.36	70.71	54.47	11.94						

UNBUNDLED NETWORK ELEMENTS - South Carolina														Attachment: 2		Exhibit: A	
CATEGORY		RATE ELEMENTS	Interim	Zone	BCS	USOC	RATES ($)					Svc Order Submitted Elec per LSR	Svc Order Submitted Manually per LSR	Incremental Charge - Manual Svc Order vs. Electronic-1st	Incremental Charge - Manual Svc Order vs. Electronic-Add'l	Incremental Charge - Manual Svc Order vs. Electronic-Disc 1st	Incremental Charge - Manual Svc Order vs. Electronic-Disc Add'l
							Rec	Nonrecurring		Nonrecurring Disconnect		OSS Rates ($)					
								First	Add'l	First	Add'l	SOMEC	SOMAN	SOMAN	SOMAN	SOMAN	SOMAN
		2-Wire Voice Grade Port, Diff Serving Wire Center - 800 Service Term 2,3			UEP9D	UEPYZ	1.13	108.36	70.71	54.47	11.94						
		2-Wire Voice Grade Port terminated in on Megalink or equivalent Basic Local Area			UEP9D	UEPY9	1.13	40.30	19.90	24.98	6.65						
		2-Wire Voice Grade Port Terminated on 800 Service Term Basic Local Area			UEP9D	UEPY2	1.13	40.30	19.90	24.98	6.65						
	AL, KY, LA, MS, SC, & TN Only																
		2-Wire Voice Grade Port (Centrex)			UEP9D	UEPQA	1.13	40.30	19.90	24.98	6.65						
		2-Wire Voice Grade Port (Centrex 800 termination)			UEP9D	UEPQB	1.13	40.30	19.90	24.98	6.65						
		2-Wire Voice Grade Port (Centrex / EBS-PSET)4			UEP9D	UEPQC	1.13	40.30	19.90	24.98	6.65						
		2-Wire Voice Grade Port (Centrex / EBS-M5009)4			UEP9D	UEPQD	1.13	40.30	19.90	24.98	6.65						
		2-Wire Voice Grade Port (Centrex / EBS-M5209)4			UEP9D	UEPQE	1.13	40.30	19.90	24.98	6.65						
		2-Wire Voice Grade Port (Centrex / EBS-M5112)4			UEP9D	UEPQF	1.13	40.30	19.90	24.98	6.65						
		2-Wire Voice Grade Port (Centrex / EBS-M5312)4			UEP9D	UEPQG	1.13	40.30	19.90	24.98	6.65						
		2-Wire Voice Grade Port (Centrex / EBS-M5008)4			UEP9D	UEPQT	1.13	40.30	19.90	24.98	6.65						
		2-Wire Voice Grade Port (Centrex / EBS-M5208)4			UEP9D	UEPQU	1.13	40.30	19.90	24.98	6.65						
		2-Wire Voice Grade Port (Centrex / EBS-M5216)4			UEP9D	UEPQV	1.13	40.30	19.90	24.98	6.65						
		2-Wire Voice Grade Port (Centrex / EBS-M5316)4			UEP9D	UEPQ3	1.13	40.30	19.90	24.98	6.65						
		2-Wire Voice Grade Port (Centrex with Caller ID)			UEP9D	UEPQH	1.13	40.30	19.90	24.98	6.65						
		2-Wire Voice Grade Port (Centrex/Caller ID/Msg Wtg Lamp Indication)4			UEP9D	UEPQW	1.13	40.30	19.90	24.98	6.65						
		2-Wire Voice Grade Port (Centrex/Msg Wtg Lamp Indication)4			UEP9D	UEPQJ	1.13	40.30	19.90	24.98	6.65						
		2-Wire Voice Grade Port (Centrex from diff Serving Wire Center) 2,3			UEP9D	UEPQM	1.13	108.36	70.71	54.47	11.94						
		2-Wire Voice Grade Port (Centrex/differ SWC /EBS-PSET)2,3,4			UEP9D	UEPQO	1.13	108.36	70.71	54.47	11.94						
		2-Wire Voice Grade Port (Centrex/differ SWC /EBS-M5009)2,3,4			UEP9D	UEPQP	1.13	108.36	70.71	54.47	11.94						
		2-Wire Voice Grade Port (Centrex/differ SWC /EBS-5209)2,3,4			UEP9D	UEPQQ	1.13	108.36	70.71	54.47	11.94						
		2-Wire Voice Grade Port (Centrex/differ SWC /EBS-M5112)2,3,4			UEP9D	UEPQR	1.13	108.36	70.71	54.47	11.94						
		2-Wire Voice Grade Port (Centrex/differ SWC /EBS-M5312)2,3,4			UEP9D	UEPQS	1.13	108.36	70.71	54.47	11.94						
		2-Wire Voice Grade Port (Centrex/differ SWC /EBS-M5008)2,3,4			UEP9D	UEPQ4	1.13	108.36	70.71	54.47	11.94						
		2-Wire Voice Grade Port (Centrex/differ SWC /EBS-M5208)2,3,4			UEP9D	UEPQ5	1.13	108.36	70.71	54.47	11.94						
		2-Wire Voice Grade Port (Centrex/differ SWC /EBS-M5216)2,3,4			UEP9D	UEPQ6	1.13	108.36	70.71	54.47	11.94						
		2-Wire Voice Grade Port (Centrex/differ SWC /EBS-M5316)2,3,4			UEP9D	UEPQ7	1.13	108.36	70.71	54.47	11.94						
		2-Wire Voice Grade Port, Diff Serving Wire Center - 800 Service Term 2,3			UEP9D	UEPQZ	1.13	108.36	70.71	54.47	11.94						
		2-Wire Voice Grade Port terminated in on Megalink or equivalent			UEP9D	UEPQ9	1.13	40.30	19.90	24.98	6.65						
		2-Wire Voice Grade Port Terminated on 800 Service Term			UEP9D	UEPQ2	1.13	40.30	19.90	24.98	6.65						
	Local Switching																
		Centrex Intercom Funtionality, per port			UEP9D	URECS	0.7996										
	Local Number Portability																
		Local Number Portability (1 per port)			UEP9D	LNPCC	0.35										
	Features																
		All Standard Features Offered, per port			UEP9D	UEPVF	3.04										
		All Select Features Offered, per port			UEP9D	UEPVS	0.00	406.42									
		All Centrex Control Features Offered, per port			UEP9D	UEPVC	3.04										
	NARS																
		Unbundled Network Access Register - Combination			UEP9D	UARCX	0.00	0.00	0.00	0.00	0.00						
		Unbundled Network Access Register - Inward			UEP9D	UAR1X	0.00	0.00	0.00	0.00	0.00						
		Unbundled Network Access Register - Outdial			UEP9D	UAROX	0.00	0.00	0.00	0.00	0.00						

UNBUNDLED NETWORK ELEMENTS - South Carolina													Attachment: 2		Exhibit: A	
CATEGORY	RATE ELEMENTS	Interim	Zone	BCS	USOC	RATES ($)					Svc Order Submitted Elec per LSR	Svc Order Submitted Manually per LSR	Incremental Charge - Manual Svc Order vs. Electronic-1st	Incremental Charge - Manual Svc Order vs. Electronic-Add'l	Incremental Charge - Manual Svc Order vs. Electronic-Disc 1st	Incremental Charge - Manual Svc Order vs. Electronic-Disc Add'l
						Rec	Nonrecurring		Nonrecurring Disconnect		OSS Rates ($)					
							First	Add'l	First	Add'l	SOMEC	SOMAN	SOMAN	SOMAN	SOMAN	SOMAN
Miscellaneous Terminations																
2-Wire Trunk Side																
	Trunk Side Terminations, each			UEP9D	CEND6	8.86	119.57	18.78	60.03	3.77						
4-Wire Digital (1.544 Megabits)																
	DS1 Circuit Terminations, each			UEP9D	M1HD1	73.62	202.47	95.90	72.75	2.47						
	DS0 Channels Activiated per Channel			UEP9D	M1HDO	0.00	14.51									
Interoffice Channel Mileage - 2-Wire																
	Interoffice Channel Facilities Termination			UEP9D	M1GBC	24.30	40.63	27.47	16.77	6.91						
	Interoffice Channel mileage, per mile or fraction of mile			UEP9D	M1GBM	0.0167										
Feature Activations (DS0) Centrex Loops on Channelized DS1 Service																
D4 Channel Bank Feature Activations																
	Feature Activation on D-4 Channel Bank Centrex Loop Slot			UEP9D	1PQWS	0.56										
	Feature Activation on D-4 Channel Bank FX line Side Loop Slot			UEP9D	1PQW6	0.56										
	Feature Activation on D-4 Channel Bank FX Trunk Side Loop Slot			UEP9D	1PQW7	0.56										
	Feature Activation on D-4 Channel Bank Centrex Loop Slot - Different Wire Center			UEP9D	1PQWP	0.56										
	Feature Activation on D-4 Channel Bank Private Line Loop Slot			UEP9D	1PQWV	0.56										
	Feature Activation on D-4 Channel Bank Tjie Line/Trunk Loop Slot			UEP9D	1PQWQ	0.56										
	Feature Activation on D-4 Channel Bank WATS Loop Slot			UEP9D	1PQWA	0.56										
Non-Recurring Charges (NRC) Associated with UNE-P Centrex																
	NRC Conversion Currently Combined Switch-As-Is with allowed changes, per port			UEP9D	USAC2		37.93	16.72								
	New Centrex Standard Common Block			UEP9D	M1ACS	0.00	668.70									
	New Centrex Customized Common Block			UEP9D	M1ACC	0.00	668.70									
	NAR Establishment Charge, Per Occasion			UEP9D	URECA	0.00	72.89									
Additional Non-Recurring Charges (NRC)																
	Unbundled Miscellaneous Rate Element, Tag Loop at End Use Premise			UEP9D	URETL		8.33	0.83								
	Unbundled Miscellaneous Rate Element, Tag Design Loop at End Use Premise			UEP9D	URETN		11.24	1.10								
Note 1 - Required Port for Centrex Control in 1AESS, 5ESS & EWSD																
Note 2 - Requres Interoffice Channel Mileage																
Note 3 - Installation is combination of Installation charge for SL2 Loop and Port																
Note 4 - Requires Specific Customer Premises Equipment																
Note: Rates displaying an "R" in Interim column are interim and subject to rate true-up as set forth in General Terms and Conditions.																

UNBUNDLED NETWORK ELEMENTS - Tennessee														Attachment: 2		Exhibit: A	
CATEGORY		RATE ELEMENTS	Interim	Zone	BCS	USOC	RATES ($)					Svc Order Submitted Elec per LSR	Svc Order Submitted Manually per LSR	Incremental Charge - Manual Svc Order vs. Electronic-1st	Incremental Charge - Manual Svc Order vs. Electronic-Add'l	Incremental Charge - Manual Svc Order vs. Electronic-Disc 1st	Incremental Charge - Manual Svc Order vs. Electronic-Disc Add'l
							Rec	Nonrecurring		Nonrecurring Disconnect		OSS Rates ($)					
								First	Add'l	First	Add'l	SOMEC	SOMAN	SOMAN	SOMAN	SOMAN	SOMAN
	The "Zone" shown in the sections for stand-alone loops or loops as part of a combination refers to Geographically Deaveraged UNE Zones. To view Geographically Deaveraged UNE Zone Designations by Central Office, refer to internet Website: http://www.interconnection.bellsouth.com/become_a_clec/html/interconnection.htm																
OPERATIONAL SUPPORT SYSTEMS (OSS) - "REGIONAL RATES"																	
	NOTE: (1) CLEC should contact its contract negotiator if it prefers the "state specific" OSS charges as ordered by the State Commissions. The OSS charges currently contained in this rate exhibit are the BellSouth "regional" service ordering charges. CLEC may elect either the state specific Commission ordered rates for the service ordering charges, or CLEC may elect the regional service ordering charge, however, CLEC can not obtain a mixture of the two regardless if CLEC has a interconnection contract established in each of the 9 states.																
	NOTE: (2) Any element that can be ordered electronically will be billed according to the SOMEC rate listed in this category. Please refer to BellSouth's Local Ordering Handbook (LOH) to determine if a product can be ordered electronically. For those elements that cannot be ordered electronically at present per the LOH, the listed SOMEC rate in this category reflects the charge that would be billed to a CLEC once electronic ordering capabilities come on-line for that element. Otherwise, the manual ordering charge, SOMAN, will be applied to a CLECs bill when it submits an LSR to BellSouth.																
	NOTE: (3) OSS - Manual Service Order Charge, Per Element - UNE Only **Please see applicable rate element for SOMAN charge**																
		OSS - Electronic Service Order Charge, Per Local Service Request (LSR) - UNE Only				SOMEC		3.50	0.00	3.50	0.00						
UNE SERVICE DATE ADVANCEMENT CHARGE																	
	NOTE: The Expedite charge will be maintained commensurate with BellSouth's FCC No.1 Tariff, Section 5 as applicable.																
		UNE Expedite Charge per Circuit or Line Assignable USOC, per Day			UAL, UEANL, UCL, UEF, UDF, UEQ, UDL, UENTW, UDN, UEA, UHL, ULC, USL, U1T12, U1T48, U1TD1, U1TD3, U1TDX, U1TO3, U1TS1, U1TVX, UC1BC, UC1BL, UC1CC, UC1CL, UC1DC, UC1DL, UC1EC, UC1EL, UC1FC, UC1FL, UC1GC, UC1GL, UC1HC, UC1HL, UDL12, UDL48, UDLO3, UDLSX, UE3, ULD12, ULD48, ULDD1, ULDD3, ULDDX, ULDO3, ULDS1, ULDVX, UNC1X, UNC3X, UNCDX, UNCNX, UNCSX, UNCVX, UNLD1, UNLD3, UXTD1, UXTD3, UXTS1, U1TUC, U1TUD, U1TUB, U1TUA	SDASP		200.00									
UNBUNDLED EXCHANGE ACCESS LOOP																	
	2-WIRE ANALOG VOICE GRADE LOOP																
		2-Wire Analog Voice Grade Loop - Service Level 1- Zone 1		1	UEANL	UEAL2	13.19	31.99	20.02	10.65	1.41			20.35	10.54	13.32	13.32
		2-Wire Analog Voice Grade Loop - Service Level 1- Zone 2		2	UEANL	UEAL2	17.23	31.99	20.02	10.65	1.41			20.35	10.54	13.32	13.32
		2-Wire Analog Voice Grade Loop - Service Level 1- Zone 3		3	UEANL	UEAL2	22.53	31.99	20.02	10.65	1.41			20.35	10.54	13.32	13.32
		2-Wire Analog Voice Grade Loop - Service Level 1- Zone 1		1	UEANL	UEASL	13.19	31.99	20.02	10.65	1.41			20.35	10.54	13.32	13.32
		2-Wire Analog Voice Grade Loop - Service Level 1- Zone 2		2	UEANL	UEASL	17.23	31.99	20.02	10.65	1.41			20.35	10.54	13.32	13.32
		2-Wire Analog Voice Grade Loop - Service Level 1- Zone 3		3	UEANL	UEASL	22.53	31.99	20.02	10.65	1.41			20.35	10.54	13.32	13.32
		Unbundled Miscellaneous Rate Element, Tag Loop at End User Premise			UEANL	URETL		8.33	0.83					20.35	10.54	13.32	13.32
		Loop Testing - Basic 1st Half Hour			UEANL	URET1		78.92	78.92					20.35	10.54	13.32	13.32
		Loop Testing - Basic Additional Half Hour			UEANL	URETA		23.33	23.33					20.35	10.54	13.32	13.32
		CLEC to CLEC Conversion Charge Without Outside Dispatch (UVL-SL1)			UEANL	UREWO		15.80	8.95					20.35	10.54	13.32	13.32

UNBUNDLED NETWORK ELEMENTS - Tennessee														Attachment: 2		Exhibit: A	
CATEGORY		RATE ELEMENTS	Interim	Zone	BCS	USOC	RATES ($)					Svc Order Submitted Elec per LSR	Svc Order Submitted Manually per LSR	Incremental Charge - Manual Svc Order vs. Electronic-1st	Incremental Charge - Manual Svc Order vs. Electronic-Add'l	Incremental Charge - Manual Svc Order vs. Electronic-Disc 1st	Incremental Charge - Manual Svc Order vs. Electronic-Disc Add'l
							Rec	Nonrecurring		Nonrecurring Disconnect		OSS Rates ($)					
								First	Add'l	First	Add'l	SOMEC	SOMAN	SOMAN	SOMAN	SOMAN	SOMAN
		Unbundled Voice Loop, Non-Design Voice Loop, billing for BST providing make-up (Engineering Information - E.I.)			UEANL	UEANM		28.80	28.80								
		Manual Order Coordination for UVL-SL1s (per loop)			UEANL	UEAMC		36.52	36.52								
		Order Coordination for Specified Conversion Time for UVL-SL1 (per LSR)			UEANL	OCOSL		34.29	34.29								
	2-WIRE Unbundled COPPER LOOP																
		2-Wire Unbundled Copper Loop - Non-Designed Zone 1		1	UEQ	UEQ2X	13.19	31.99	20.02	10.65	1.41			20.35	10.54	13.32	13.32
		2 Wire Unbundled Copper Loop - Non-Designed - Zone 2		2	UEQ	UEQ2X	17.23	31.99	20.02	10.65	1.41			20.35	10.54	13.32	13.32
		2 Wire Unbundled Copper Loop - Non-Designed - Zone 3		3	UEQ	UEQ2X	22.53	31.99	20.02	10.65	1.41			20.35	10.54	13.32	13.32
		Unbundled Miscellaneous Rate Element, Tag Loop at End User Premise			UEQ	URETL		8.33	0.83					20.35	10.54	13.32	13.32
		Manual Order Coordination 2 Wire Unbundled Copper Loop - Non-Designed (per loop)			UEQ	USBMC		36.52	36.52								
		Unbundled Copper Loop, Non-Design Copper Loop, billing for BST providing make-up (Engineering Information - E.I.)			UEQ	UEQMU		28.80	28.80					20.35	10.54	13.32	13.32
		Loop Testing - Basic 1st Half Hour			UEQ	URET1		78.92	78.92					20.35	10.54	13.32	13.32
		Loop Testing - Basic Additional Half Hour			UEQ	URETA		23.33	23.33					20.35	10.54	13.32	13.32
		CLEC to CLEC Conversion Charge Without Outside Dispatch (UCL-ND)			UEQ	UREWO		14.29	7.44					20.35	10.54	13.32	13.32
UNBUNDLED EXCHANGE ACCESS LOOP																	
	2-WIRE ANALOG VOICE GRADE LOOP																
		2 Wire Analog Voice Grade Loop-Service Level 1-Line Splitting-Zone 1		1	UEPSR UEPSB	UEALS	13.19	31.99	20.02	10.65	1.41			20.35	10.54	13.32	13.32
		2 Wire Analog Voice Grade Loop-Service Level 1-Line Splitting-Zone 1		1	UEPSR UEPSB	UEABS	13.19	31.99	20.02	10.65	1.41			20.35	10.54	13.32	13.32
		2 Wire Analog Voice Grade Loop- Service Level 1-Line Splitting-Zone 2		2	UEPSR UEPSB	UEALS	17.23	31.99	20.02	10.65	1.41			20.35	10.54	13.32	13.32
		2 Wire Analog Voice Grade Loop- Service Level 1-Line Splitting-Zone 2		2	UEPSR UEPSB	UEABS	17.23	31.99	20.02	10.65	1.41			20.35	10.54	13.32	13.32
		2 Wire Analog Voice Grade Loop-Service Level 1-Line Splitting-Zone 3		3	UEPSR UEPSB	UEALS	22.53	31.99	20.02	10.65	1.41			20.35	10.54	13.32	13.32
		2 Wire Analog Voice Grade Loop-Service Level 1-Line Splitting-Zone 3		3	UEPSR UEPSB	UEABS	22.53	31.99	20.02	10.65	1.41			20.35	10.54	13.32	13.32
UNBUNDLED EXCHANGE ACCESS LOOP																	
	2-WIRE ANALOG VOICE GRADE LOOP																
		2-Wire Analog Voice Grade Loop - Service Level 2 w/Loop or Ground Start Signaling - Zone 1		1	UEA	UEAL2	16.56	75.06	48.20	28.70	17.64			20.35	10.54	13.32	13.32
		2-Wire Analog Voice Grade Loop - Service Level 2 w/Loop or Ground Start Signaling - Zone 2		2	UEA	UEAL2	21.63	75.06	48.20	28.70	17.64			20.35	10.54	13.32	13.32
		2-Wire Analog Voice Grade Loop - Service Level 2 w/Loop or Ground Start Signaling - Zone 3		3	UEA	UEAL2	28.28	75.06	48.20	28.70	17.64			20.35	10.54	13.32	13.32
		Order Coordination for Specified Conversion Time (per LSR)			UEA	OCOSL		34.29									
		2-Wire Analog Voice Grade Loop - Service Level 2 w/Reverse Battery Signaling - Zone 1		1	UEA	UEAR2	16.56	75.06	48.20	28.70	17.64			20.35	10.54	13.32	13.32
		2-Wire Analog Voice Grade Loop - Service Level 2 w/Reverse Battery Signaling - Zone 2		2	UEA	UEAR2	21.63	75.06	48.20	28.70	17.64			20.35	10.54	13.32	13.32
		2-Wire Analog Voice Grade Loop - Service Level 2 w/Reverse Battery Signaling - Zone 3		3	UEA	UEAR2	28.28	75.06	48.20	28.70	17.64			20.35	10.54	13.32	13.32
		Order Coordination for Specified Conversion Time (per LSR)			UEA	OCOSL		34.29									
		CLEC to CLEC Conversion Charge without outside dispatch			UEA	UREWO		75.06	36.41					20.35	10.54	13.32	13.32
		Loop Tagging - Service Level 2 (SL2)			UEA	URETL		11.23	1.10					20.35	10.54	13.32	13.32
	4-WIRE ANALOG VOICE GRADE LOOP																
		4-Wire Analog Voice Grade Loop - Zone 1		1	UEA	UEAL4	24.70	122.76	85.57	76.35	39.16			20.35	10.54	13.32	13.32
		4-Wire Analog Voice Grade Loop - Zone 2		2	UEA	UEAL4	32.25	122.76	85.57	76.35	39.16			20.35	10.54	13.32	13.32
		4-Wire Analog Voice Grade Loop - Zone 3		3	UEA	UEAL4	42.17	122.76	85.57	76.35	39.16			20.35	10.54	13.32	13.32
		Order Coordination for Specified Conversion Time (per LSR)			UEA	OCOSL		34.29									
		CLEC to CLEC Conversion Charge without outside dispatch			UEA	UREWO		75.06	36.41					20.35	10.54	13.32	13.32
	2-WIRE ISDN DIGITAL GRADE LOOP																
		2-Wire ISDN Digital Grade Loop - Zone 1		1	UDN	U1L2X	22.22	142.76	88.88	76.35	39.16			20.35	10.54	13.32	13.32

UNBUNDLED NETWORK ELEMENTS - Tennessee														Attachment: 2		Exhibit: A	
CATEGORY	RATE ELEMENTS	Interim	Zone	BCS	USOC	RATES ($)					Svc Order Submitted Elec per LSR	Svc Order Submitted Manually per LSR	Incremental Charge - Manual Svc Order vs. Electronic-1st	Incremental Charge - Manual Svc Order vs. Electronic-Add'l	Incremental Charge - Manual Svc Order vs. Electronic-Disc 1st	Incremental Charge - Manual Svc Order vs. Electronic-Disc Add'l
						Rec	Nonrecurring		Nonrecurring Disconnect		OSS Rates ($)					
							First	Add'l	First	Add'l	SOMEC	SOMAN	SOMAN	SOMAN	SOMAN	SOMAN
	2-Wire ISDN Digital Grade Loop - Zone 2		2	UDN	U1L2X	29.02	142.76	88.88	76.35	39.16			20.35	10.54	13.32	13.32
	2-Wire ISDN Digital Grade Loop - Zone 3		3	UDN	U1L2X	37.95	142.76	88.88	76.35	39.16			20.35	10.54	13.32	13.32
	Order Coordination For Specified Conversion Time (per LSR)			UDN	OCOSL		34.29									
	CLEC to CLEC Conversion Charge without outside dispatch			UDN	UREWO		91.77	44.22					20.35	10.54	13.32	13.32
2-WIRE ASYMMETRICAL DIGITAL SUBSCRIBER LINE (ADSL) COMPATIBLE LOOP																
	2 Wire Unbundled ADSL Loop including manual service inquiry & facility reservation - Zone 1		1	UAL	UAL2X	13.82	270.01	234.63	74.54	39.14			20.35	10.54	13.32	13.32
	2 Wire Unbundled ADSL Loop including manual service inquiry & facility reservation - Zone 2		2	UAL	UAL2X	18.05	270.01	234.63	74.54	39.14			20.35	10.54	13.32	13.32
	2 Wire Unbundled ADSL Loop including manual service inquiry & facility reservation - Zone 3		3	UAL	UAL2X	23.60	270.01	234.63	74.54	39.14			20.35	10.54	13.32	13.32
	Order Coordination for Specified Conversion Time (per LSR)			UAL	OCOSL		34.29									
	2 Wire Unbundled ADSL Loop without manual service inquiry & facility reservaton - Zone 1	I	1	UAL	UAL2W	13.82	31.99	20.02	10.65	1.41			20.35	10.54	13.32	13.32
	2 Wire Unbundled ADSL Loop without manual service inquiry & facility reservaton - Zone 2	I	2	UAL	UAL2W	18.05	31.99	20.02	10.65	1.41			20.35	10.54	13.32	13.32
	2 Wire Unbundled ADSL Loop without manual service inquiry & facility reservaton - Zone 3	I	3	UAL	UAL2W	23.60	31.99	20.02	10.65	1.41			20.35	10.54	13.32	13.32
	Order Coordination for Specified Conversion Time (per LSR)			UAL	OCOSL		34.29									
	CLEC to CLEC Conversion Charge without outside dispatch	I		UAL	UREWO		31.99	20.02					20.35	10.54	13.32	13.32
2-WIRE HIGH BIT RATE DIGITAL SUBSCRIBER LINE (HDSL) COMPATIBLE LOOP																
	2 Wire Unbundled HDSL Loop including manual service inquiry & facility reservation - Zone 1		1	UHL	UHL2X	10.83	270.01	234.63	74.54	39.14			20.35	10.54	13.32	13.32
	2 Wire Unbundled HDSL Loop including manual service inquiry & facility reservation - Zone 2		2	UHL	UHL2X	14.15	270.01	234.63	74.54	39.14			20.35	10.54	13.32	13.32
	2 Wire Unbundled HDSL Loop including manual service inquiry & facility reservation - Zone 3		3	UHL	UHL2X	18.50	270.01	234.63	74.54	39.14			20.35	10.54	13.32	13.32
	Order Coordination for Specified Conversion Time (per LSR)			UHL	OCOSL		34.29									
	2 Wire Unbundled HDSL Loop without manual service inquiry and facility reservation - Zone 1	I	1	UHL	UHL2W	10.83	31.99	20.02	10.65	1.41			20.35	10.54	13.32	13.32
	2 Wire Unbundled HDSL Loop without manual service inquiry and facility reservation - Zone 2	I	2	UHL	UHL2W	14.15	31.99	20.02	10.65	1.41			20.35	10.54	13.32	13.32
	2 Wire Unbundled HDSL Loop without manual service inquiry and facility reservation - Zone 3	I	3	UHL	UHL2W	18.50	31.99	20.02	10.65	1.41			20.35	10.54	13.32	13.32
	Order Coordination for Specified Conversion Time (per LSR)			UHL	OCOSL		34.29									
	CLEC to CLEC Conversion Charge without outside dispatch	I		UHL	UREWO		31.99	20.02					20.35	10.54	13.32	13.32
4-WIRE HIGH BIT RATE DIGITAL SUBSCRIBER LINE (HDSL) COMPATIBLE LOOP																
	4 Wire Unbundled HDSL Loop including manual service inquiry and facility reservation - Zone 1		1	UHL	UHL4X	13.93	279.60	244.22	74.54	39.14			20.35	10.54	13.32	13.32
	4-Wire Unbundled HDSL Loop including manual service inquiry and facility reservation - Zone 2		2	UHL	UHL4X	18.20	279.60	244.22	74.54	39.14			20.35	10.54	13.32	13.32
	4-Wire Unbundled HDSL Loop including manual service inquiry and facility reservation - Zone 3		3	UHL	UHL4X	23.80	279.60	244.22	74.54	39.14			20.35	10.54	13.32	13.32
	Order Coordination for Specified Conversion Time (per LSR)			UHL	OCOSL		34.29									
	4-Wire Unbundled HDSL Loop without manual service inquiry and facility reservation - Zone 1	I	1	UHL	UHL4W	13.93	31.99	20.02	10.65	1.41			20.35	10.54	13.32	13.32
	4-Wire Unbundled HDSL Loop without manual service inquiry and facility reservation - Zone 2	I	2	UHL	UHL4W	18.20	31.99	20.02	10.65	1.41			20.35	10.54	13.32	13.32
	4-Wire Unbundled HDSL Loop without manual service inquiry and facility reservation - Zone 3	I	3	UHL	UHL4W	23.80	31.99	20.02	10.65	1.41			20.35	10.54	13.32	13.32
	Order Coordination for Specified Conversion Time (per LSR)			UHL	OCOSL		34.29									
	CLEC to CLEC Conversion Charge without outside dispatch	I		UHL	UREWO		31.99	20.02					20.35	10.54	13.32	13.32
4-WIRE DS1 DIGITAL LOOP																
	4-Wire DS1 Digital Loop - Zone 1		1	USL	USLXX	57.73	313.08	219.72	96.86	40.45			18.98	8.43	11.95	11.95
	4-Wire DS1 Digital Loop - Zone 2		2	USL	USLXX	75.40	313.08	219.72	96.86	40.45			18.98	8.43	11.95	11.95
	4-Wire DS1 Digital Loop - Zone 3		3	USL	USLXX	98.59	313.08	219.72	96.86	40.45			18.98	8.43	11.95	11.95
	Order Coordination for Specified Conversion Time (per LSR)			USL	OCOSL		34.59									
	CLEC to CLEC Conversion Charge without outside dispatch			USL	UREWO		130.47	40.11					20.35	10.54	13.32	13.32
4-WIRE 19.2, 56 OR 64 KBPS DIGITAL GRADE LOOP																

UNBUNDLED NETWORK ELEMENTS - Tennessee														Attachment: 2		Exhibit: A	
CATEGORY		RATE ELEMENTS	Interim	Zone	BCS	USOC	RATES ($)					Svc Order Submitted Elec per LSR	Svc Order Submitted Manually per LSR	Incremental Charge - Manual Svc Order vs. Electronic-1st	Incremental Charge - Manual Svc Order vs. Electronic-Add'l	Incremental Charge - Manual Svc Order vs. Electronic-Disc 1st	Incremental Charge - Manual Svc Order vs. Electronic-Disc Add'l
							Rec	Nonrecurring		Nonrecurring Disconnect		OSS Rates ($)					
								First	Add'l	First	Add'l	SOMEC	SOMAN	SOMAN	SOMAN	SOMAN	SOMAN
		4 Wire Unbundled Digital 19.2 Kbps		1	UDL	UDL19	31.10	207.01	141.38	90.70	44.18			20.35	10.54	13.32	13.32
		4 Wire Unbundled Digital 19.2 Kbps		2	UDL	UDL19	40.61	207.01	141.38	90.70	44.18			20.35	10.54	13.32	13.32
		4 Wire Unbundled Digital 19.2 Kbps		3	UDL	UDL19	53.11	207.01	141.38	90.70	44.18			20.35	10.54	13.32	13.32
		4 Wire Unbundled Digital Loop 56 Kbps - Zone 1		1	UDL	UDL56	31.10	207.01	141.38	90.70	44.18			20.35	10.54	13.32	13.32
		4 Wire Unbundled Digital Loop 56 Kbps - Zone 2		2	UDL	UDL56	40.61	207.01	141.38	90.70	44.18			20.35	10.54	13.32	13.32
		4 Wire Unbundled Digital Loop 56 Kbps - Zone 3		3	UDL	UDL56	53.11	207.01	141.38	90.70	44.18			20.35	10.54	13.32	13.32
		Order Coordination for Specified Conversion Time (per LSR)			UDL	OCOSL		34.29									
		4 Wire Unbundled Digital Loop 64 Kbps - Zone 1		1	UDL	UDL64	31.10	207.01	141.38	90.70	44.18			20.35	10.54	13.32	13.32
		4 Wire Unbundled Digital Loop 64 Kbps - Zone 2		2	UDL	UDL64	40.61	207.01	141.38	90.70	44.18			20.35	10.54	13.32	13.32
		4 Wire Unbundled Digital Loop 64 Kbps - Zone 3		3	UDL	UDL64	53.11	207.01	141.38	90.70	44.18			20.35	10.54	13.32	13.32
		Order Coordination for Specified Conversion Time (per LSR)			UDL	OCOSL		34.29									
		CLEC to CLEC Conversion Charge without outside dispatch			UDL	UREWO		102.28	49.82					20.35	10.54	13.32	13.32
	2-WIRE Unbundled COPPER LOOP																
		2-Wire Unbundled Copper Loop-Designed including manual service inquiry & facility reservation - Zone 1	I	1	UCL	UCLPB	13.19	31.99	20.02	10.65	1.41			20.35	10.54	13.32	13.32
		2-Wire Unbundled Copper Loop-Designed including manual service inquiry & facility reservation - Zone 2	I	2	UCL	UCLPB	17.23	31.99	20.02	10.65	1.41			20.35	10.54	13.32	13.32
		2 Wire Unbundled Copper Loop-Designed including manual service inquiry & facility reservation - Zone 3	I	3	UCL	UCLPB	22.53	31.99	20.02	10.65	1.41			20.35	10.54	13.32	13.32
		Order Coordination for Unbundled Copper Loops (per loop)			UCL	UCLMC		36.52	36.52								
		2-Wire Unbundled Copper Loop-Designed without manual service inquiry and facility reservation - Zone 1	I	1	UCL	UCLPW	13.19	31.99	20.02	10.65	1.41			20.35	10.54	13.32	13.32
		2-Wire Unbundled Copper Loop-Designed without manual service inquiry and facility reservation - Zone 2	I	2	UCL	UCLPW	17.23	31.99	20.02	10.65	1.41			20.35	10.54	13.32	13.32
		2-Wire Unbundled Copper Loop-Designed without manual service inquiry and facility reservation - Zone 3	I	3	UCL	UCLPW	22.53	31.99	20.02	10.65	1.41			20.35	10.54	13.32	13.32
		Order Coordination for Unbundled Copper Loops (per loop)			UCL	UCLMC		36.52	36.52								
		CLEC to CLEC Conversion Charge without outside dispatch (UCL-Des)	I		UCL	UREWO		31.99	20.02					20.35	10.54	13.32	13.32
	4-WIRE COPPER LOOP																
		4-Wire Copper Loop-Designed including manual service inquiry and facility reservation - Zone 1	I	1	UCL	UCL4S	24.70	122.76	85.57	76.35	39.16			20.35	10.54	13.32	13.32
		4-Wire Copper Loop-Designed including manual service inquiry and facility reservation - Zone 2	I	2	UCL	UCL4S	32.25	122.76	85.57	76.35	39.16			20.35	10.54	13.32	13.32
		4-Wire Copper Loop-Designed including manual service inquiry and facility reservation - Zone 3	I	3	UCL	UCL4S	42.17	122.76	85.57	76.35	39.16			20.35	10.54	13.32	13.32
		Order Coordination for Unbundled Copper Loops (per loop)			UCL	UCLMC		36.52	36.52								
		4-Wire Copper Loop-Designed without manual service inquiry and facility reservation - Zone 1	I	1	UCL	UCL4W	24.70	122.76	85.57	76.35	39.16			20.35	10.54	13.32	13.32
		4-Wire Copper Loop-Designed without manual service inquiry and facility reservation - Zone 2	I	2	UCL	UCL4W	32.25	122.76	85.57	76.35	39.16			20.35	10.54	13.32	13.32
		4-Wire Copper Loop-Designed without manual service inquiry and facility reservation - Zone 3	I	3	UCL	UCL4W	42.17	122.76	85.57	76.35	39.16			20.35	10.54	13.32	13.32
		Order Coordination for Unbundled Copper Loops (per loop)			UCL	UCLMC		36.52	36.52								
		CLEC to CLEC Conversion Charge without outside dispatch (UCL-Des)	I		UCL	UREWO		31.99	20.02					20.35	10.54	13.32	13.32
LOOP MODIFICATION																	
		Unbundled Loop Modification, Removal of Load Coils - 2 Wire pair less than or equal to 18k ft, per Unbundled Loop			UAL, UHL, UCL, UEQ, ULS, UEA, UEANL, UEPSR, UEPSB	ULM2L		65.40	65.40					20.35	10.54	13.32	13.32
		Unbundled Loop Modification Removal of Load Coils - 4 Wire less than or equal to 18K ft, per Unbundled Loop			UHL, UCL, UEA	ULM4L		65.40	65.40					20.35	10.54	13.32	13.32
		Unbundled Loop Modification Removal of Bridged Tap Removal, per unbundled loop	I		UAL, UHL, UCL, UEQ, ULS, UEA, UEANL, UEPSR, UEPSB	ULMBT		65.44	65.44					20.35	10.54	13.32	13.32
SUB-LOOPS																	
	Sub-Loop Distribution																

UNBUNDLED NETWORK ELEMENTS - Tennessee														Attachment: 2		Exhibit: A	
CATEGORY		RATE ELEMENTS	Interim	Zone	BCS	USOC	RATES ($)					Svc Order Submitted Elec per LSR	Svc Order Submitted Manually per LSR	Incremental Charge - Manual Svc Order vs. Electronic-1st	Incremental Charge - Manual Svc Order vs. Electronic-Add'l	Incremental Charge - Manual Svc Order vs. Electronic-Disc 1st	Incremental Charge - Manual Svc Order vs. Electronic-Disc Add'l
							Rec	Nonrecurring		Nonrecurring Disconnect		OSS Rates ($)					
								First	Add'l	First	Add'l	SOMEC	SOMAN	SOMAN	SOMAN	SOMAN	SOMAN
		Sub-Loop - Per Cross Box Location - CLEC Feeder Facility Set-Up	I		UEANL	USBSA		517.25	517.25					20.35	10.54	13.32	13.32
		Sub-Loop - Per Cross Box Location - Per 25 Pair Panel Set-Up	I		UEANL	USBSB		42.68	42.68					20.35	10.54	13.32	13.32
		Sub-Loop - Per Building Equipment Room - CLEC Feeder Facility Set-Up	I		UEANL	USBSC		313.01	313.01					20.35	10.54	13.32	13.32
		Sub-Loop - Per Building Equipment Room - Per 25 Pair Panel Set-Up	I		UEANL	USBSD		108.06	108.06					20.35	10.54	13.32	13.32
		Sub-Loop Distribution Per 2-Wire Analog Voice Grade Loop - Statewide		sw	UEANL	USBN2	10.02	148.84	112.34	73.14	36.65			20.35	10.54	13.32	13.32
		Order Coordination for Unbundled Sub-Loops, per sub-loop pair			UEANL	USBMC		34.29	34.29								
		Sub-Loop Distribution Per 4-Wire Analog Voice Grade Loop - Zone 1		1	UEANL	USBN4	7.30	147.93	75.11	99.96	16.98			20.35	10.54	13.32	13.32
		Sub-Loop Distribution Per 4-Wire Analog Voice Grade Loop - Zone 2		2	UEANL	USBN4	9.54	147.93	75.11	99.96	16.98			20.35	10.54	13.32	13.32
		Sub-Loop Distribution Per 4-Wire Analog Voice Grade Loop - Zone 3		3	UEANL	USBN4	12.47	147.93	75.11	99.96	16.98			20.35	10.54	13.32	13.32
		Order Coordination for Unbundled Sub-Loops, per sub-loop pair			UEANL	USBMC		34.29	34.29								
		Sub-Loop 2-Wire Intrabuilding Network Cable (INC)	I		UEANL	USBR2	1.35	94.56	29.35					20.35	10.54	13.32	13.32
		Order Coordination for Unbundled Sub-Loops, per sub-loop pair			UEANL	USBMC		34.29	34.29								
		Sub-Loop 4-Wire Intrabuilding Network Cable (INC)	I		UEANL	USBR4	2.26	116.14	37.10					20.35	10.54	13.32	13.32
		Order Coordination for Unbundled Sub-Loops, per sub-loop pair			UEANL	USBMC		34.29	34.29								
		Loop Testing - Basic 1st Half Hour			UEANL	URET1		78.92	78.92								
		Loop Testing - Basic Additional Half Hour			UEANL	URETA		23.33	23.33								
		2 Wire Copper Unbundled Sub-Loop Distribution - Zone 1	I	1	UEF	UCS2X	5.16	110.71	37.89	94.41	13.09			20.35	10.54	13.32	13.32
		2 Wire Copper Unbundled Sub-Loop Distribution - Zone 2	I	2	UEF	UCS2X	6.74	110.71	37.89	94.41	13.09			20.35	10.54	13.32	13.32
		2 Wire Copper Unbundled Sub-Loop Distribution - Zone 3	I	3	UEF	UCS2X	8.81	110.71	37.89	94.41	13.09			20.35	10.54	13.32	13.32
		Order Coordination for Unbundled Sub-Loops, per sub-loop pair			UEF	USBMC		34.29	34.29								
		4 Wire Copper Unbundled Sub-Loop Distribution - Zone 1	I	1	UEF	UCS4X	6.52	117.12	44.30	99.96	16.98			20.35	10.54	13.32	13.32
		4 Wire Copper Unbundled Sub-Loop Distribution - Zone 2	I	2	UEF	UCS4X	8.52	117.12	44.30	99.96	16.98			20.35	10.54	13.32	13.32
		4 Wire Copper Unbundled Sub-Loop Distribution - Zone 3	I	3	UEF	UCS4X	11.14	117.12	44.30	99.96	16.98			20.35	10.54	13.32	13.32
		Order Coordination for Unbundled Sub-Loops, per sub-loop pair			UEF	USBMC		34.29	34.29								
		Loop Testing - Basic 1st Half Hour			UEF	URET1		78.92	78.92								
		Loop Testing - Basic Additional Half Hour			UEF	URETA		23.33	23.33								
	Unbundled Network Terminating Wire (UNTW)																
		Unbundled Network Terminating Wire (UNTW) per Pair	I		UENTW	UENPP	0.4555	2.48	2.48					20.35	10.54	13.32	13.32
	Network Interface Device (NID)																
		Network Interface Device (NID) - 1-2 lines			UENTW	UND12		89.69	54.56	0.6391	0.6391			20.35	10.54	13.32	13.32
		Network Interface Device (NID) - 1-6 lines			UENTW	UND16		129.65	94.51	0.6522	0.6522			20.35	10.54	13.32	13.32
		Network Interface Device Cross Connect - 2 W			UENTW	UNDC2		11.11	11.11					20.35	10.54	13.32	13.32
		Network Interface Device Cross Connect - 4W			UENTW	UNDC4		11.11	11.11					20.35	10.54	13.32	13.32
UNE OTHER, PROVISIONING ONLY - NO RATE																	
		NID - Dispatch and Service Order for NID installation			UENTW	UNDBX	0.00	0.00									
		UNTW Circuit Id Establishment, Provisioning Only - No Rate			UENTW	UENCE	0.00	0.00									
		Unbundled Contract Name, Provisioning Only - No Rate			UEANL,UEF,UEQ,UENTW	UNECN	0.00	0.00									
UNE OTHER, PROVISIONING ONLY - NO RATE																	
		Unbundled Contact Name, Provisioning Only - no rate			UAL,UCL,UDC,UDL,UDN,UEA,UHL,ULC	UNECN	0.00	0.00									
		Unbundled Sub-Loop Feeder-2 Wire Cross Box Jumper - no rate			UEA,UDN,UCL,UDC	USBFQ	0.00	0.00									

UNBUNDLED NETWORK ELEMENTS - Tennessee														Attachment: 2		Exhibit: A	
CATEGORY		RATE ELEMENTS	Interim	Zone	BCS	USOC	RATES ($)					Svc Order Submitted Elec per LSR	Svc Order Submitted Manually per LSR	Incremental Charge - Manual Svc Order vs. Electronic-1st	Incremental Charge - Manual Svc Order vs. Electronic-Add'l	Incremental Charge - Manual Svc Order vs. Electronic-Disc 1st	Incremental Charge - Manual Svc Order vs. Electronic-Disc Add'l
							Rec	Nonrecurring		Nonrecurring Disconnect		OSS Rates ($)					
								First	Add'l	First	Add'l	SOMEC	SOMAN	SOMAN	SOMAN	SOMAN	SOMAN
		Unbundled Sub-Loop Feeder-4 Wire Cross Box Jumper - no rate			UEA,USL,UCL,UDL	USBFR	0.00	0.00									
		Unbundled DS1 Loop - Superframe Format Option - no rate			USL	CCOSF	0.00	0.00									
		Unbundled DS1 Loop - Expanded Superframe Format option - no rate			USL	CCOEF	0.00	0.00									
HIGH CAPACITY UNBUNDLED LOCAL LOOP																	
		High Capacity Unbundled Local Loop - DS3 - Per Mile per month			UE3	1L5ND	9.19										
		High Capacity Unbundled Local Loop - DS3 - Facility Termination per month			UE3	UE3PX	374.24	595.37	304.50	234.83	170.16			36.84	36.84		
		High Capacity Unbundled Local Loop - STS-1 - Per Mile per month			UDLSX	1L5ND	9.19										
		High Capacity Unbundled Local Loop - STS-1 - Facility Termination per month			UDLSX	UDLS1	389.35	595.37	304.50	215.82	151.15			36.84	36.84		
	Note (1): Rates provided in TN for both electronic and manual Loop Makeup are interim and subject to retro-active true-up adjustments pending a permanent rate ruling on these rate elements from the Tennessee Regulatory Authority.																
LOOP MAKE-UP																	
		Loop Makeup - Preordering Without Reservation, per working or spare facility queried (Manual).	R		UMK	UMKLW		0.76	0.76					19.99	19.99	19.99	19.99
		Loop Makeup - Preordering With Reservation, per spare facility queried (Manual).	R		UMK	UMKLP		0.76	0.76					19.99	19.99	19.99	19.99
		Loop Makeup--With or Without Reservation, per working or spare facility queried (Mechanized)	R		UMK	UMKMQ		0.76	0.76								
LINE SHARING AND LINE SPLITTING																	
	NOTE 1: The Line Sharing monthly recurring rates for all installations completed from October 02, 2003 through midnight October 01, 2004 shall be billed as follows:																
	NOTE 1: 10/02/2003 – 10/01/2004: 25% of the rate for an unbundled copper loop non-designed ("UCLND")																
	NOTE 1: 10/02/2004 – 10/01/2005: 50% of the rate for UCLND																
	NOTE 1: 10/02/2005 – 10/01/2006: 75% of the rate for UCLND																
	NOTE 1: Above will apply to USOCS: ULSDT and ULSCT																
	****NOTE 2: The Line Sharing monthly recurring rates with USOCs ULSDC and ULSCC applies only to circuits installed and inservice on or before October 1, 2003**																
	LINE SHARING																
	SPLITTERS-CENTRAL OFFICE BASED																
		Line Sharing Splitter, per System 96 Line Capacity			ULS	ULSDA	100.00	150.00	0.00	0.00	0.00			20.35	10.54	13.32	13.32
		Line Sharing Splitter, per System 24 Line Capacity			ULS	ULSDB	25.00	150.00	0.00	0.00	0.00			20.35	10.54	13.32	13.32
		Line Sharing-DLEC Owned Splitter in CO-CFA activaton-deactivation (per LSOD)			ULS	ULSDG		163.06	0.00	92.71	0.00			20.35	10.54	13.32	13.32
	END USER ORDERING-CENTRAL OFFICE BASED LINE SHARING																
		Line Sharing - per Line Activation (BST Owned splitter) - OBSOLETE see **NOTE 2			ULS	ULSDC	0.61	40.00	31.39	0.00	0.00			20.35	10.54	13.32	13.32
		Line Share Service, TRO per line activation, BST owned splitter - Central Office Located (25% of UCLND) - please see NOTE 1 (E:10/2/2003)			ULS	ULSDT	2.94	40.00	31.39	0.00	0.00						
		Line Share Service, TRO per line activation, BST owned splitter - Central Office Located (50% of UCLND) - please see NOTE 1 (E:10/2/2004)			ULS	ULSDT	5.87	40.00	31.39	0.00	0.00						
		Line Share Service, TRO per line activation, BST owned splitter - Central Office Located (75% of UCLND) - please see NOTE 1 (E:10/2/2005)			ULS	ULSDT	8.81	40.00	31.39	0.00	0.00						
		Line Sharing - per Subsequent Activity per Line Rearrangement(BST Owned Splitter)			ULS	ULSDS		30.00	15.00					20.35	10.54	13.32	13.32
		Line Sharing - per Subsequent Activity per Line Rearrangement(DLEC Owned Splitter)			ULS	ULSCS		30.00	15.00					20.35	10.54	13.32	13.32
		Line Sharing - per Line Activation (DLEC owned Splitter) - OBSOLETE see **NOTE 2			ULS	ULSCC	0.61	47.44	19.31	0.00	0.00			20.35	10.54	13.32	13.32
		Line Share Service, TRO per line activation, CLEC owned splitter - Central Office Located (25% of UCLND) - please see NOTE 1 (E:10/2/2003)			ULS	ULSCT	2.94	47.44	19.31	0.00	0.00						
		Line Share Service, TRO per line activation, CLEC owned splitter - Central Office Located (50% of UCLND) - please see NOTE 1 (E:10/2/2004)			ULS	ULSCT	5.87	47.44	19.31	0.00	0.00						

CATEGORY	RATE ELEMENTS	Interim	Zone	BCS	USOC	RATES ($) Rec	Nonrecurring First	Nonrecurring Add'l	Nonrecurring Disconnect First	Nonrecurring Disconnect Add'l	Svc Order Submitted Elec per LSR	Svc Order Submitted Manually per LSR	Attachment: 2 Incremental Charge - Manual Svc Order vs. Electronic-1st	Attachment: 2 Incremental Charge - Manual Svc Order vs. Electronic-Add'l	Exhibit: A Incremental Charge - Manual Svc Order vs. Electronic-Disc 1st	Exhibit: A Incremental Charge - Manual Svc Order vs. Electronic-Disc Add'l
											OSS Rates ($)					
											SOMEC	SOMAN	SOMAN	SOMAN	SOMAN	SOMAN
	Line Share Service, TRO per line activation, CLEC owned splitter - Central Office Located (75% of UCLND) - please see NOTE 1 (E:10/2/2005)			ULS	ULSCT	8.81	47.44	19.31	0.00	0.00						
	LINE SPLITTING															
	END USER ORDERING-CENTRAL OFFICE BASED															
	Line Splitting - per line activation DLEC owned splitter			UEPSR UEPSB	UREOS	0.61										
	Line Splitting - per line activation BST owned - physical			UEPSR UEPSB	UREBP	0.61	48.96	21.39	35.06	10.79			20.35	10.54	13.32	13.32
	Line Splitting - per line activation BST owned - virtual			UEPSR UEPSB	UREBV	0.61	48.96	21.39	35.06	10.79			20.35	10.54	13.32	13.32
	MAINTENANCE															
	No Trouble Found - per 1/2 hour increments - Basic						80.00	55.00								
	No Trouble Found - per 1/2 hour increments - Overtime						120.00	82.50								
	No Trouble Found - per 1/2 hour increments - Premium						160.00	110.00								
UNBUNDLED DEDICATED TRANSPORT																
	INTEROFFICE CHANNEL - DEDICATED TRANSPORT															
	Interoffice Channel - Dedicated Transport - 2-Wire Voice Grade - Per Mile per month			U1TVX	1L5XX	0.0054										
	Interoffice Channel - Dedicated Transport- 2- Wire Voice Grade - Facility Termination			U1TVX	U1TV2	18.58	55.39	17.37	27.96	3.51			20.35	21.09		
	Interoffice Channel - Dedicated Transpor t- 2-Wire Voice Grade Rev Bat. - Per Mile per month			U1TVX	1L5XX	0.0054										
	Interoffice Channel - Dedicated Transport- 2- Wire VG Rev Bat. - Facility Termination			U1TVX	U1TR2	18.58	55.39	17.37	27.96	3.51			20.35	21.09		
	Interoffice Channel - Dedicated Transport - 4-Wire Voice Grade - Per Mile per month			U1TVX	1L5XX	0.0054										
	Interoffice Channel - Dedicated Transport - 4- Wire Voice Grade - Facility Termination			U1TVX	U1TV4	24.09	37.87	26.02	30.78	13.07			15.08	15.08		
	Interoffice Channel - Dedicated Transport - 56 kbps - per mile per month			U1TDX	1L5XX	0.0174										
	Interoffice Channel - Dedicated Transport - 56 kbps - Facility Termination			U1TDX	U1TD5	17.98	55.39	17.37	27.96	3.51			20.35	21.09		
	Interoffice Channel - Dedicated Transport - 64 kbps - per mile per month			U1TDX	1L5XX	0.0174										
	Interoffice Channel - Dedicated Transport - 64 kbps - Facility Termination			U1TDX	U1TD6	17.98	55.39	17.37	27.96	3.51			20.35	21.09		
	Interoffice Channel - Dedicated Channel - DS1 - Per Mile per month			U1TD1	1L5XX	0.3562										
	Interoffice Channel - Dedicated Tranport - DS1 - Facility Termination			U1TD1	U1TF1	77.86	112.40	76.27	19.55	14.99			20.35	21.09		
	Interoffice Channel - Dedicated Transport - DS3 - Per Mile per month			U1TD3	1L5XX	2.34										
	Interoffice Channel - Dedicated Transport - DS3 - Facility Termination per month			U1TD3	U1TF3	848.99	395.29	176.56	109.04	105.91			36.84	36.84		
	Interoffice Channel - Dedicated Transport - STS-1 - Per Mile per month			U1TS1	1L5XX	2.34										
	Interoffice Channel - Dedicated Transport - STS-1 - Facility Termination			U1TS1	U1TFS	849.30	395.29	176.56	109.04	105.91			36.84	36.84		
DARK FIBER																
	Dark Fiber, Four Fiber Strands, Per Route Mile or Fraction Thereof per month - Interoffice Channel			UDF, UDFCX	1L5DF	28.74										
	NRC Dark Fiber - Interoffice Channel			UDF, UDFCX	UDF14		1,121.00	153.19	580.26	357.17			20.35	10.54	13.32	13.32
	Dark Fiber, Four Fiber Strands, Per Route Mile or Fraction Thereof per month - Local Loop			UDF, UDFCX	1L5DL	58.83										
	NRC Dark Fiber - Local Loop			UDF, UDFCX	UDFL4		1,121.00	153.19	580.26	357.17			20.35	10.54	13.32	13.32
8XX ACCESS TEN DIGIT SCREENING																
	8XX Access Ten Digit Screening, Per Call			OHD		0.0005192										
	8XX Access Ten Digit Screening, Reservation Charge Per 8XX Number Reserved			OHD	N8R1X		5.21	0.76					20.35	20.35	13.28	13.28
	8XX Access Ten Digit Screening, Per 8XX No. Established W/O POTS Translations			OHD			11.47	1.46	7.34	0.7602			20.35	20.35	13.28	13.28

CATEGORY	RATE ELEMENTS	Interim	Zone	BCS	USOC	RATES ($) Rec	Nonrecurring First	Nonrecurring Add'l	Nonrecurring Disconnect First	Nonrecurring Disconnect Add'l	Svc Order Submitted Elec per LSR	Svc Order Submitted Manually per LSR	Attachment: 2 Incremental Charge - Manual Svc Order vs. Electronic-1st	Attachment: 2 Incremental Charge - Manual Svc Order vs. Electronic-Add'l	Exhibit: A Incremental Charge - Manual Svc Order vs. Electronic-Disc 1st	Exhibit: A Incremental Charge - Manual Svc Order vs. Electronic-Disc Add'l
											OSS Rates ($)					
											SOMEC	SOMAN	SOMAN	SOMAN	SOMAN	SOMAN
	8XX Access Ten Digit Screening, Per 8XX No. Established With POTS Translations			OHD	N8FTX		11.47	1.46	7.34	0.7602			20.35	20.35	13.28	13.28
	8XX Access Ten Digit Screening, Customized Area of Service Per 8XX Number			OHD	N8FCX		4.47	2.24					20.35	20.35	13.28	13.28
	8XX Access Ten Digit Screening, Multiple InterLATA CXR Routing Per CXR Requested Per 8XX No.			OHD	N8FMX		5.23	3.00					20.35	20.35	13.28	13.28
	8XX Access Ten Digit Screening, Change Charge Per Request			OHD	N8FAX		5.97	0.76					20.35	20.35	13.28	13.28
	8XX Access Ten Digit Screening, Call Handling and Destination Features			OHD	N8FDX		4.47						20.35	20.35	13.28	13.28
LINE INFORMATION DATA BASE ACCESS (LIDB)																
	LIDB Common Transport Per Query			OQT		0.0000354										
	LIDB Validation Per Query			OQU		0.0117403										
	LIDB Originating Point Code Establishment or Change			OQT, OQU	NRBPX		49.03						20.35	20.35	13.28	13.28
SIGNALING (CCS7)																
	CCS7 Signaling Termination, Per STP Port			UDB	PT8SX	138.41										
	CCS7 Signaling Usage, Per TCAP Message			UDB		0.0000916										
	CCS7 Signaling Connection, Per link (A link)			UDB	TPP++	17.84	130.84	130.84					20.35	20.35	13.32	13.32
	CCS7 Signaling Connection, Per link (B link) (also known as D link)			UDB	TPP++	17.84	130.84	130.84					20.35	20.35	13.32	13.32
	CCS7 Signaling Usage, Per ISUP Message			UDB		0.0000373										
	CCS7 Signaling Usage Surrogate, per link per LATA			UDB	STU56	352.30										
	Signaling Point Code, per Originating Point Code Establishment or Change, per STP			UDB	CCAPO		121.77	121.77					20.35	20.35	13.32	13.32
CALLING NAME (CNAM) SERVICE																
	CNAM For DB Owners - Service Establishment			OQV			43.27									
	CNAM For Non DB Owners - Service Establishment			OQV			43.27									
	CNAM For DB Owners - Service Provisioning With Point Code Establishment			OQV			1,868.00	1,382.00								
	CNAM For Non DB Owners - Service Provisioning With Point Code Establishment			OQV			645.50	432.23								
	CNAM for DB Owners, Per Query			OQV		0.0010541										
	CNAM for Non DB Owners, Per Query			OQV		0.0010541										
	CNAM (Non-Databs Owner), NRC, applies when using the Character Based User Interface (CHUI)			OQV	CDDCH								20.35	20.35	13.28	13.28
SELECTIVE ROUTING																
	Selective Routing Per Unique Line Class Code Per Request Per Switch						179.60	179.60					20.35	20.35		
VIRTUAL COLLOCATION																
	Virtual Collocation-2 Wire Cross Connects (Loop) for Line Splitting			UEPSR UEPSB	VE1LS	0.57	11.62	9.90	10.38	8.66			19.99	19.99	19.99	19.99
PHYSICAL COLLOCATION																
	Physical Collocation-2 Wire Cross Connects (Loop) for Line Splitting			UEPSR UEPSB	PE1LS	0.7905	11.62	9.90	10.38	8.66			19.99	19.99	19.99	19.99
AIN SELECTIVE CARRIER ROUTING																
	Regional Service Establishment			SRC	SRCEC		190,638.00						20.35			
	End Office Establishment			SRC	SRCEO		317.55	317.55	3.19	3.19			20.35	20.35	13.28	13.28
	Query NRC, per query			SRC		0.0206047										
AIN - BELLSOUTH AIN SMS ACCESS SERVICE																
	AIN SMS Access Service - Service Establishment, Per State, Initial Setup			A1N	CAMSE		135.56	135.56					20.35	20.35	13.28	13.28
	AIN SMS Access Service - Port Connection - Dial/Shared Access			A1N	CAMDP		41.75	41.75					20.35	20.35	13.28	13.28
	AIN SMS Access Service - Port Connection - ISDN Access			A1N	CAM1P		41.75	41.75					20.35	20.35	13.28	13.28
	AIN SMS Access Service - User Identification Codes - Per User ID Code			A1N	CAMAU		96.63	96.63					20.35	20.35	13.28	13.28
	AIN SMS Access Service - Security Card, Per User ID Code, Initial or Replacement			A1N	CAMRC		113.67	113.67					20.35	20.35	13.28	13.28
	AIN SMS Access Service - Storage, Per Unit (100 Kilobytes)					0.0024										
	AIN SMS Access Service - Session, Per Minute					0.0820123										

UNBUNDLED NETWORK ELEMENTS - Tennessee														Attachment: 2		Exhibit: A	
CATEGORY		RATE ELEMENTS	Interim	Zone	BCS	USOC	RATES ($)					Svc Order Submitted Elec per LSR	Svc Order Submitted Manually per LSR	Incremental Charge - Manual Svc Order vs. Electronic-1st	Incremental Charge - Manual Svc Order vs. Electronic-Add'l	Incremental Charge - Manual Svc Order vs. Electronic-Disc 1st	Incremental Charge - Manual Svc Order vs. Electronic-Disc Add'l
							Rec	Nonrecurring		Nonrecurring Disconnect				OSS Rates ($)			
								First	Add'l	First	Add'l	SOMEC	SOMAN	SOMAN	SOMAN	SOMAN	SOMAN
		AIN SMS Access Service - Company Performed Session, Per Minute					2.27										
AIN - BELLSOUTH AIN TOOLKIT SERVICE																	
		AIN Toolkit Service - Service Establishment Charge, Per State, Initial Setup			CAM	BAPSC		132.04	132.04					20.35	20.35	13.28	13.28
		AIN Toolkit Service - Training Session, Per Customer				BAPVX		7,915.00	7,915.00					20.35	20.35	13.28	13.28
		AIN Toolkit Service - Trigger Access Charge, Per Trigger, Per DN, Term. Attempt				BAPTT		31.21	31.21					20.35	20.35	13.28	13.28
		AIN Toolkit Service - Trigger Access Charge, Per Trigger, Per DN, Off-Hook Delay				BAPTD		31.21	31.21					20.35	20.35	13.28	13.28
		AIN Toolkit Service - Trigger Access Charge, Per Trigger, Per DN, Off-Hook Immediate				BAPTM		31.21	31.21					20.35	20.35	13.28	13.28
		AIN Toolkit Service - Trigger Access Charge, Per Trigger, Per DN, 10-Digit PODP				BAPTO		85.24	85.24					20.35	20.35	13.28	13.28
		AIN Toolkit Service - Trigger Access Charge, Per Trigger, Per DN, CDP				BAPTC		85.24	85.24					20.35	20.35	13.28	13.28
		AIN Toolkit Service - Trigger Access Charge, Per Trigger, Per DN, Feature Code				BAPTF		85.24	85.24					20.35	20.35	13.28	13.28
		AIN Toolkit Service - Query Charge, Per Query					0.0211882										
		AIN Toolkit Service - Type 1 Node Charge, Per AIN Toolkit Subscription, Per Node, Per Query					0.0054774										
		AIN Toolkit Service - SCP Storage Charge, Per SMS Access Account, Per 100 Kilobytes					1.50										
		AIN Toolkit Service - Monthly report - Per AIN Toolkit Service Subscription			CAM	BAPMS	17.43	33.52	33.52					20.35	20.35	13.28	13.28
		AIN Toolkit Service - Special Study - Per AIN Toolkit Service Subscription			CAM	BAPLS	0.1321116	36.23	36.23					20.35	20.35	13.28	13.28
		AIN Toolkit Service - Call Event Report - Per AIN Toolkit Service Subscription			CAM	BAPDS	17.35	33.52	33.52					20.35	20.35	13.28	13.28
		AIN Toolkit Service - Call Event Special Study - Per AIN Toolkit Service Subscription			CAM	BAPES	0.0511435	36.23	36.23					20.35	20.35	13.28	13.28
ENHANCED EXTENDED LINK (EELs)																	
	NOTE: The monthly recurring and non-recurring charges below will apply and the Switch-As-Is Charge will not apply for UNE combinations provisioned as ' Ordinarily Combined' Network Elements.																
	NOTE: The monthly recurring and the Switch-As-Is Charge and not the non-recurring charges below will apply for UNE combinations provisioned as ' Currently Combined' Network Elements.																
	EXTENTED 2-WIRE VOICE GRADE EXTENDED LOOP WITH DEDICATED DS1 INTEROFFICE TRANSPORT																
		First 2-Wire VG Loop (SL2) in Combination - Zone 1		1	UNCVX	UEAL2	16.56	108.76	35.47	72.94	10.86			20.35	21.09		
		First 2-Wire VG Loop (SL2) in Combination - Zone 2		2	UNCVX	UEAL2	21.63	108.76	35.47	72.94	10.86			20.35	21.09		
		First 2-Wire VG Loop (SL2) in Combination - Zone 3		3	UNCVX	UEAL2	28.28	108.76	35.47	72.94	10.86			20.35	21.09		
		Interoffice Transport - Dedicated - DS1 combination - Per Mile per month			UNC1X	1L5XX	0.3562										
		Interoffice Transport - Dedicated - DS1 combination - Facility Termination per month			UNC1X	U1TF1	77.86	171.24	113.12	70.07	30.90			20.35	21.09		
		1/0 Channelization System in combination Per Month			UNC1X	MQ1	80.77	105.76	14.48	3.04	2.74						
		Voice Grade COCI - Per Month			UNCVX	1D1VG	0.91	5.70	4.42								
		Each Additional 2-Wire VG Loop (SL 2) in Combination - Zone 1		1	UNCVX	UEAL2	16.56	108.76	35.47	72.94	10.86			20.35	21.09		
		Each Additional 2-Wire VG Loop (SL 2) in Combination - Zone 2		2	UNCVX	UEAL2	21.63	108.76	35.47	72.94	10.86			20.35	21.09		
		Each Additional 2-Wire VG Loop (SL 2) in Combination - Zone 3		3	UNCVX	UEAL2	28.28	108.76	35.47	72.94	10.86			20.35	21.09		
		Voice Grade COCI - Per Month			UNCVX	1D1VG	0.91	5.70	4.42								
		Nonrecurring Currently Combined Network Elements Switch -As-Is Charge			UNC1X	UNCCC		52.73	24.62	9.12	9.12			20.35	21.09		
	EXTENDED 4-WIRE VOICE GRADE EXTENDED LOOP WITH DEDICATED DS1 INTEROFFICE TRANSPORT																
		First 4-Wire Analog Voice Grade Loop in Combination - Zone 1		1	UNCVX	UEAL4	24.70	108.76	35.47	72.94	10.86			20.35	21.09		
		First 4-Wire Analog Voice Grade Loop in Combination - Zone 2		2	UNCVX	UEAL4	32.26	108.76	35.47	72.94	10.86			20.35	21.09		

CATEGORY	RATE ELEMENTS	Interim	Zone	BCS	USOC	RATES ($) Rec	Nonrecurring First	Nonrecurring Add'l	Nonrecurring Disconnect First	Nonrecurring Disconnect Add'l	Svc Order Submitted Elec per LSR	Svc Order Submitted Manually per LSR	Attachment: 2 Incremental Charge - Manual Svc Order vs. Electronic-1st	Attachment: 2 Incremental Charge - Manual Svc Order vs. Electronic-Add'l	Exhibit: A Incremental Charge - Manual Svc Order vs. Electronic-Disc 1st	Exhibit: A Incremental Charge - Manual Svc Order vs. Electronic-Disc Add'l
											OSS Rates ($)					
											SOMEC	SOMAN	SOMAN	SOMAN	SOMAN	SOMAN
	First 4-Wire Analog Voice Grade Loop in Combination - Zone 3		3	UNCVX	UEAL4	42.18	108.76	35.47	72.94	10.86			20.35	21.09		
	Interoffice Transport - Dedicated - DS1 combination - Per Mile Per Month			UNC1X	1L5XX	0.3562										
	Interoffice Transport - Dedicated - DS1 - Facility Termination Per Month			UNC1X	U1TF1	77.86	171.24	113.12	70.07	30.90			20.35	21.09		
	1/0 Channel System in combination Per Month			UNC1X	MQ1	80.77	105.76	14.48	3.04	2.74						
	Voice Grade COCI in combination - per month			UNCVX	1D1VG	0.91	5.70	4.42								
	Additional 4-Wire Analog Voice Grade Loop in same DS1 Interoffice Transport Combination - Zone 1		1	UNCVX	UEAL4	24.70	108.76	35.47	72.94	10.86			20.35	21.09		
	Additional 4-Wire Analog Voice Grade Loop in same DS1 Interoffice Transport Combination - Zone 2		2	UNCVX	UEAL4	32.26	108.76	35.47	72.94	10.86			20.35	21.09		
	Additional 4-Wire Analog Voice Grade Loop in same DS1 Interoffice Transport Combination - Zone 3		3	UNCVX	UEAL4	42.18	108.76	35.47	72.94	10.86			20.35	21.09		
	Additional Voice Grade COCI in combination - per month			UNCVX	1D1VG	0.91	5.70	4.42								
	Nonrecurring Currently Combined Network Elements Switch -As-Is Charge			UNC1X	UNCCC		52.73	24.62	9.12	9.12			20.35	21.09		
	EXTENDED 4-WIRE 56 KBPS EXTENDED DIGITAL LOOP WITH DEDICATED DS1 INTEROFFICE TRANSPORT															
	First 4-Wire 56Kbps Digital Grade Loop in Combination - Zone 1		1	UNCDX	UDL56	31.10	108.76	35.47	72.94	10.86			20.35	21.09		
	First 4-Wire 56Kbps Digital Grade Loop in Combination - Zone 2		2	UNCDX	UDL56	40.61	108.76	35.47	72.94	10.86			20.35	21.09		
	First 4-Wire 56Kbps Digital Grade Loop in Combination - Zone 3		3	UNCDX	UDL56	53.11	108.76	35.47	72.94	10.86			20.35	21.09		
	Interoffice Transport - Dedicated - DS1 combination - Per Mile Per Month			UNC1X	1L5XX	0.3562										
	Interoffice Transport - Dedicated - DS1 - combination Facility Termination Per Month			UNC1X	U1TF1	77.86	171.24	113.12	70.07	30.90			20.35	21.09		
	1/0 Channel System in combination Per Month			UNC1X	MQ1	80.77	105.76	14.48	3.04	2.74						
	OCU-DP COCI (data) per month (2.4-64kbs)			UNCDX	1D1DD	0.91	5.70	4.42								
	Additional 4-Wire 56Kbps Digital Grade Loop in same DS1 Interoffice Transport Combination - Zone 1		1	UNCDX	UDL56	31.10	108.76	35.47	72.94	10.86			20.35	21.09		
	Additional 4-Wire 56Kbps Digital Grade Loop in same DS1 Interoffice Transport Combination - Zone 2		2	UNCDX	UDL56	40.61	108.76	35.47	72.94	10.86			20.35	21.09		
	Additional 4-Wire 56Kbps Digital Grade Loop in same DS1 Interoffice Transport Combination - Zone 3		3	UNCDX	UDL56	53.11	108.76	35.47	72.94	10.86			20.35	21.09		
	Additional OCU-DP COCI (data) - in combination per month (2.4-64kbs)			UNCDX	1D1DD	0.91	5.70	4.42								
	Nonrecurring Currently Combined Network Elements Switch -As-Is Charge			UNC1X	UNCCC		52.73	24.62	9.12	9.12			20.35	21.09		
	EXTENDED 4-WIRE 64 KBPS EXTENDED DIGITAL LOOP WITH DEDICATED DS1 INTEROFFICE TRANSPORT															
	First 4-Wire 64Kbps Digital Grade Loop in Combination - Zone 1		1	UNCDX	UDL64	31.10	108.76	35.47	72.94	10.86			20.35	21.09		
	First 4-Wire 64Kbps Digital Grade Loop in Combination - Zone 2		2	UNCDX	UDL64	40.61	108.76	35.47	72.94	10.86			20.35	21.09		
	First 4-Wire 64Kbps Digital Grade Loop in Combination - Zone 3		3	UNCDX	UDL64	53.11	108.76	35.47	72.94	10.86			20.35	21.09		
	Interoffice Transport - Dedicated - DS1 combination - Per Mile Per Month			UNC1X	1L5XX	0.3562										
	interoffice Transport - Dedicated - DS1 combination - Facility Termination Per Month			UNC1X	U1TF1	77.86	171.24	113.12	70.07	30.90			20.35	21.09		
	1/0 Channel System in combination Per Month			UNC1X	MQ1	80.77	105.76	14.48	3.04	2.74						
	OCU-DP COCI (data) - in combination - per month (2.4-64kbs)			UNCDX	1D1DD	0.91	5.70	4.42								
	Additional 4-Wire 64Kbps Digital Grade Loop in same DS1 Interoffice Transport Combination - Zone 1		1	UNCDX	UDL64	31.10	108.76	35.47	72.94	10.86			20.35	21.09		
	Additional 4-Wire 64Kbps Digital Grade Loop in same DS1 Interoffice Transport Combination - Zone 2		2	UNCDX	UDL64	40.61	108.76	35.47	72.94	10.86			20.35	21.09		
	Additional 4-Wire 64Kbps Digital Grade Loop in same DS1 Interoffice Transport Combination - Zone 3		3	UNCDX	UDL64	53.11	108.76	35.47	72.94	10.86			20.35	21.09		

CATEGORY	RATE ELEMENTS	Interim	Zone	BCS	USOC	RATES ($)					Svc Order Submitted Elec per LSR	Svc Order Submitted Manually per LSR	Attachment: 2 Incremental Charge - Manual Svc Order vs. Electronic-1st	Attachment: 2 Incremental Charge - Manual Svc Order vs. Electronic-Add'l	Exhibit: A Incremental Charge - Manual Svc Order vs. Electronic-Disc 1st	Exhibit: A Incremental Charge - Manual Svc Order vs. Electronic-Disc Add'l
						Rec	Nonrecurring First	Nonrecurring Add'l	Nonrecurring Disconnect First	Nonrecurring Disconnect Add'l	OSS Rates ($) SOMEC	OSS Rates ($) SOMAN	OSS Rates ($) SOMAN	OSS Rates ($) SOMAN	OSS Rates ($) SOMAN	OSS Rates ($) SOMAN
	Additional OCU-DP COCI (data) - in combination - per month (2.4-64kbs)			UNCDX	1D1DD	0.91	5.70	4.42								
	Nonrecurring Currently Combined Network Elements Switch -As-Is Charge			UNC1X	UNCCC		52.73	24.62	9.12	9.12			20.35	21.09		
	EXTENDED 4-WIRE DS1 DIGITAL EXTENDED LOOP WITH DEDICATED DS1 INTEROFFICE TRANSPORT															
	4-Wire DS1 Digital Loop in Combination - Zone 1		1	UNC1X	USLXX	57.73	228.40	161.74	79.87	24.88						
	4-Wire DS1 Digital Loop in Combination - Zone 2		2	UNC1X	USLXX	75.40	228.40	161.74	79.87	24.88						
	4-Wire DS1 Digital Loop in Combination - Zone 3		3	UNC1X	USLXX	98.59	228.40	161.74	79.87	24.88						
	Interoffice Transport - Dedicated - DS1 combination - Per Mile Per Month			UNC1X	1L5XX	0.3562										
	Interoffice Transport - Dedicated - DS1 combination - Facility Termination Per Month			UNC1X	U1TF1	77.86	171.24	113.12	70.07	30.90			20.35	21.09		
	Nonrecurring Currently Combined Network Elements Switch -As-Is Charge			UNC1X	UNCCC		52.73	24.62	9.12	9.12			20.35	21.09		
	EXTENDED 4-WIRE DS1 DIGITAL EXTENDED LOOP WITH DEDICATED DS3 INTEROFFICE TRANSPORT															
	First DS1Loop in Combination - Zone 1		1	UNC1X	USLXX	57.73	228.40	161.74	79.87	24.88			20.35	21.09		
	First DS1Loop in Combination - Zone 2		2	UNC1X	USLXX	75.40	228.40	161.74	79.87	24.88			20.35	21.09		
	First DS1Loop in Combination - Zone 3		3	UNC1X	USLXX	98.59	228.40	161.74	79.87	24.88			20.35	21.09		
	Interoffice Transport - Dedicated - DS3 combination - Per Mile Per Month			UNC3X	1L5XX	2.34										
	Interoffice Transport - Dedicated - DS3 - Facility Termination per month			UNC3X	U1TF3	854.97	482.01	153.81	64.43	35.43			36.84	36.84		
	3/1Channel System in combination per month			UNC3X	MQ3	222.98	156.02	49.41	17.12	6.77						
	DS1 COCI in combination per month			UNC1X	UC1D1	17.58	5.70	4.42								
	Additional DS1Loop in DS3 Interoffice Transport Combination - Zone 1		1	UNC1X	USLXX	57.73	228.40	161.74	79.87	24.88			20.35	21.09		
	Additional DS1Loop in DS3 Interoffice Transport Combination - Zone 2		2	UNC1X	USLXX	75.40	228.40	161.74	79.87	24.88			20.35	21.09		
	Additional DS1Loop in DS3 Interoffice Transport Combination - Zone 3		3	UNC1X	USLXX	98.59	228.40	161.74	79.87	24.88			20.35	21.09		
	Additoinal DS1 COCI in combination per month			UNC1X	UC1D1	17.58	5.70	4.42								
	Nonrecurring Currently Combined Network Elements Switch -As-Is Charge			UNC3X	UNCCC		52.73	24.62	9.12	9.12			20.35	21.09		
	EXTENDED 2-WIRE VOICE GRADE EXTENDED LOOP/ 2 WIRE VOICE GRADE INTEROFFICE TRANSPORT															
	2-WireVG Loop in combination - Zone 1		1	UNCVX	UEAL2	16.56	108.76	35.47	72.94	10.86						
	2-WireVG Loop in combination - Zone 2		2	UNCVX	UEAL2	21.63	108.76	35.47	72.94	10.86						
	2-WireVG Loop in combination - Zone 3		3	UNCVX	UEAL2	28.28	108.76	35.47	72.94	10.86						
	Interoffice Transport - 2-wire VG - Dedicated- Per Mile Per Month			UNCVX	1L5XX	0.0174										
	Interoffice Transport - 2-wire VG - Dedicated - Facility Termination per month			UNCVX	U1TV2	21.79	79.83	44.08	69.32	31.00			20.35	21.09		
	Nonrecurring Currently Combined Network Elements Switch -As-Is Charge			UNCVX	UNCCC		52.73	24.62	9.12	9.12			20.35	21.09		
	EXTENDED 4-WIRE VOICE GRADE EXTENDED LOOP/ 4 WIRE VOICE GRADE INTEROFFICE TRANSPORT															
	4-WireVG Loop in combination - Zone 1		1	UNCVX	UEAL4	24.70	108.76	35.47	72.94	10.86						
	4-WireVG Loop in combination - Zone 2		2	UNCVX	UEAL4	32.26	108.76	35.47	72.94	10.86						
	4-WireVG Loop in combination - Zone 3		3	UNCVX	UEAL4	42.18	108.76	35.47	72.94	10.86						
	Interoffice Transport - 4-wire VG - Dedicated - Per Mile Per Month			UNCVX	1L5XX	0.0174										
	Interoffice Transport - 4-wire VG - Dedicated - Facility Termination per month			UNCVX	U1TV4	27.30	79.83	44.08	69.32	31.00			20.35	21.09		
	Nonrecurring Currently Combined Network Elements Switch -As-Is Charge			UNCVX	UNCCC		52.73	24.62	9.12	9.12			20.35	21.09		
	EXTENDED DS3 DIGITAL EXTENDED LOOP WITH DEDICATED DS3 INTEROFFICE TRANSPORT															
	DS3 Local Loop in combination - per mile per month			UNC3X	1L5ND	9.19										
	DS3 Local Loop in combination - Facility Termination per month			UNC3X	UE3PX	373.47	240.23	180.87	106.78	45.24						
	Interoffice Transport - Dedicated - DS3 - Per Mile per month			UNC3X	1L5XX	2.34										

CATEGORY	RATE ELEMENTS	Interim	Zone	BCS	USOC	RATES ($)					Svc Order Submitted Elec per LSR	Svc Order Submitted Manually per LSR	Attachment: 2 Incremental Charge - Manual Svc Order vs. Electronic-1st	Attachment: 2 Incremental Charge - Manual Svc Order vs. Electronic-Add'l	Exhibit: A Incremental Charge - Manual Svc Order vs. Electronic-Disc 1st	Exhibit: A Incremental Charge - Manual Svc Order vs. Electronic-Disc Add'l
						Rec	Nonrecurring		Nonrecurring Disconnect		OSS Rates ($)					
							First	Add'l	First	Add'l	SOMEC	SOMAN	SOMAN	SOMAN	SOMAN	SOMAN
	Interoffice Transport - Dedicated - DS3 combination - Facility Termination per month			UNC3X	U1TF3	854.97	482.01	153.81	64.43	35.43			36.84	36.84		
	Nonrecurring Currently Combined Network Elements Switch -As-Is Charge			UNC3X	UNCCC		52.73	24.62	9.12	9.12			36.84	36.84		
	EXTENDED STS-1 DIGITAL EXTENDED LOOP WITH DEDICATED STS-1 INTEROFFICE TRANSPORT															
	STS-1 Local Lolp in combination - per mile per month			UNCSX	1L5ND	9.19										
	STS-1 Local Loop in combination - Facility Termination per month			UNCSX	UDLS1	394.56	240.23	180.87	106.78	45.24						
	Interoffice Transport - Dedicated - STS-1 combination - per mile per month			UNCSX	1L5XX	2.34										
	Interoffice Transport - Dedicated - STS-1 combination - Facility Termination per month			UNCSX	U1TFS	849.30	482.01	153.81	64.43	35.43			36.84	36.84		
	Nonrecurring Currently Combined Network Elements Switch -As-Is Charge			UNCSX	UNCCC		52.73	24.62	9.12	9.12			36.84	36.84		
	EXTENDED 2-WIRE ISDN EXTENDED LOOP WITH DS1 INTEROFFICE TRANSPORT															
	First 2-Wire ISDN Loop in Combination - Zone 1		1	UNCNX	U1L2X	22.22	108.76	35.47	72.94	10.86			20.35	21.09		
	First 2-Wire ISDN Loop in Combination - Zone 2		2	UNCNX	U1L2X	29.02	108.76	35.47	72.94	10.86			20.35	21.09		
	First 2-Wire ISDN Loop in Combination - Zone 3		3	UNCNX	U1L2X	37.95	108.76	35.47	72.94	10.86			20.35	21.09		
	Interoffice Transport - Dedicated - DS1 combination - per mile per month			UNC1X	1L5XX	0.3562										
	Interoffice Transport - Dedicated - DS1 combination - Facility Termination per month			UNC1X	U1TF1	77.86	171.24	113.12	70.07	30.90			20.35	21.09		
	1/0 Channel System in combination - per month			UNC1X	MQ1	80.77	105.76	14.48	3.04	2.74						
	2-wire ISDN COCI (BRITE) - in combination - per month			UNCNX	UC1CA	3.24	5.70	4.42								
	Additional 2-wire ISDN Loop in same DS1Interoffice Transport Combination - Zone 1		1	UNCNX	U1L2X	22.22	108.76	35.47	72.94	10.86			20.35	21.09		
	Additional 2-wire ISDN Loop in same DS1Interoffice Transport Combination - Zone 2		2	UNCNX	U1L2X	29.02	108.76	35.47	72.94	10.86			20.35	21.09		
	Additional 2-wire ISDN Loop in same DS1Interoffice Transport Combination - Zone 3		3	UNCNX	U1L2X	37.95	108.76	35.47	72.94	10.86			20.35	21.09		
	Additional 2-wire ISDN COCI (BRITE) - in combination- per month			UNCNX	UC1CA	3.24	5.70	4.42								
	Nonrecurring Currently Combined Network Elements Switch -As-Is Charge			UNC1X	UNCCC		52.73	24.62	9.12	9.12			20.35	21.09		
	EXTENDED 4-WIRE DS1 DIGITAL EXTENDED LOOP WITH DEDICATED STS-1 INTEROFFICE TRANSPORT															
	First DS1 Loop Combination - Zone 1		1	UNC1X	USLXX	57.73	228.40	161.74	79.87	24.88			20.35	21.09		
	First DS1 Loop Combination - Zone 2		2	UNC1X	USLXX	75.40	228.40	161.74	79.87	24.88			20.35	21.09		
	First DS1 Loop Combination - Zone 3		3	UNC1X	USLXX	98.59	228.40	161.74	79.87	24.88			20.35	21.09		
	Interoffice Transport - Dedicated - STS-1 combination - Per Mile Per Month			UNCSX	1L5XX	2.34										
	Interoffice Transport - Dedicated - STS-1 combination - Facility Termination per month			UNCSX	U1TFS	849.30	482.01	153.81	64.43	35.43			36.84	36.84		
	3/1 Channel System in combination per month			UNCSX	MQ3	222.98	156.02	49.41	17.12	6.77						
	DS1 COCI in combination per month			UNC1X	UC1D1	17.58	5.70	4.42								
	Additional DS1Loop in the same STS-1 Interoffice Transport Combination - Zone 1		1	UNC1X	USLXX	57.73	228.40	161.74	79.87	24.88			20.35	21.09		
	Additional DS1Loop in the same STS-1 Interoffice Transport Combination - Zone 2		2	UNC1X	USLXX	75.40	228.40	161.74	79.87	24.88			20.35	21.09		
	Additional DS1Loop in the same STS-1 Interoffice Transport Combination - Zone 3		3	UNC1X	USLXX	98.59	228.40	161.74	79.87	24.88			20.35	21.09		
	DS1 COCI in combination per month			UNC1X	UC1D1	17.58	5.70	4.42								
	Nonrecurring Currently Combined Network Elements Switch -As-Is Charge			UNCSX	UNCCC		52.73	24.62	9.12	9.12			36.84	36.84		
	EXTENDED 4-WIRE 56 KBPS DIGITAL EXTENDED LOOP WITH 56 KBPS INTEROFFICE TRANSPORT															
	4-wire 56 kbps Local Loop in combination - Zone 1		1	UNCDX	UDL56	31.10	108.76	35.47	72.94	10.86						
	4-wire 56 kbps Local Loop in combination - Zone 2		2	UNCDX	UDL56	40.61	108.76	35.47	72.94	10.86						
	4-wire 56 kbps Local Loop in combination - Zone 3		3	UNCDX	UDL56	53.11	108.76	35.47	72.94	10.86						
	Interoffice Transport - Dedicated - 4-wire 56 kbps combination - Per Mile per month			UNCDX	1L5XX	0.0174										

CATEGORY	RATE ELEMENTS	Interim	Zone	BCS	USOC	RATES ($) Rec	Nonrecurring First	Nonrecurring Add'l	Nonrecurring Disconnect First	Nonrecurring Disconnect Add'l	Svc Order Submitted Elec per LSR	Svc Order Submitted Manually per LSR	Attachment: 2 Incremental Charge - Manual Svc Order vs. Electronic-1st	Attachment: 2 Incremental Charge - Manual Svc Order vs. Electronic-Add'l	Exhibit: A Incremental Charge - Manual Svc Order vs. Electronic-Disc 1st	Exhibit: A Incremental Charge - Manual Svc Order vs. Electronic-Disc Add'l
											OSS Rates ($)					
											SOMEC	SOMAN	SOMAN	SOMAN	SOMAN	SOMAN
	Interoffice Transport - Dedicated - 4-wire 56 kbps combination - Facility Termination per month			UNCDX	U1TD5	21.19	79.83	44.08	69.32	31.00			20.35	21.09		
	Nonrecurring Currently Combined Network Elements Switch -As-Is Charge			UNCDX	UNCCC		52.73	24.62	9.12	9.12			20.35	21.09		
	EXTENDED 4-WIRE 64 KBPS DIGITAL EXTENDED LOOP WITH 64 KBPS INTEROFFICE TRANSPORT															
	4-wire 64 kbps Lcoal Loop in Combination - Zone 1		1	UNCDX	UDL64	31.10	108.76	35.47	72.94	10.86						
	4-wire 64 kbps Lcoal Loop in Combination - Zone 2		2	UNCDX	UDL64	40.61	108.76	35.47	72.94	10.86						
	4-wire 64 kbps Lcoal Loop in Combination - Zone 3		3	UNCDX	UDL64	53.11	108.76	35.47	72.94	10.86						
	Interoffice Transport - Dedicated - 4-wire 64 kbps combination - Per Mile per month			UNCDX	1L5XX	0.0174										
	Interoffice Transport - Dedicated - 4-wire 64 kbps combination - Facility Termination per month			UNCDX	U1TD6	21.19	79.83	44.08	69.32	31.00			20.35	21.09		
	Nonrecurring Currently Combined Network Elements Switch -As-Is Charge			UNCDX	UNCCC		52.73	24.62	9.12	9.12			20.35	21.09		
	EXTENDED 2-WIRE VOICE GRADE LOOP WITH DS1 INTEROFFICE TRANSPORT w/ 3/1 MUX															
	First 2-wire VG Loop (SL2) in Combination - Zone 1		1	UNCVX	UEAL2	16.56	108.76	35.47	72.94	10.86			20.35	21.09		
	First 2-wire VG Loop (SL2) in Combination - Zone 2		2	UNCVX	UEAL2	21.63	108.76	35.47	72.94	10.86			20.35	21.09		
	First 2-wire VG Loop (SL2) in Combination - Zone 3		3	UNCVX	UEAL2	28.28	108.76	35.47	72.94	10.86			20.35	21.09		
	First Interoffice Transport - Dedicated - DS1 combination - Per Mile			UNC1X	1L5XX	0.3562										
	First Interoffice Transport - Dedicated - DS1 combination - Facility Termination per month			UNC1X	U1TF1	77.86	171.24	113.12	70.07	30.90			20.35	21.09		
	Per each DS1 Channelization System Per Month			UNC1X	MQ1	80.77	105.76	14.48	3.04	2.74						
	Per each Voice Grade COCI - Per Month per month			UNCVX	1D1VG	0.91	5.70	4.42								
	3/1 Channel System in combination per month			UNC3X	MQ3	222.98	156.02	49.41	17.12	6.77			36.84	36.84		
	Per each DS1 COCI in combination per month			UNC1X	UC1D1	17.58	5.70	4.42								
	Each Additional 2-Wire VG Loop(SL 2) in the same DS1 Interoffice Transport Combination - Zone 1		1	UNCVX	UEAL2	16.56	108.76	35.47	72.94	10.86			20.35	21.09		
	Each Additional 2-Wire VG Loop(SL2) in the same DS1 Interoffice Transport Combination - Zone 2		2	UNCVX	UEAL2	21.63	108.76	35.47	72.94	10.86			20.35	21.09		
	Each Additional 2-Wire VG Loop(SL2) in the same DS1 Interoffice Transport Combination - Zone 3		3	UNCVX	UEAL2	28.28	108.76	35.47	72.94	10.86			20.35	21.09		
	Each Additional Voice Grade COCI in combination - per month			UNCVX	1D1VG	0.91	5.70	4.42								
	Each Additional DS1 Interoffice Channel per mile in same 3/1 Channel System per month			UNC1X	1L5XX	0.3562										
	Each Additional DS1 Interoffice Channel Facility Termination in same 3/1 Channel System per month			UNC1X	U1TF1	77.86	171.24	113.12	70.07	30.90			20.35	21.09		
	Each Additional DS1 COCI combination per month			UNC1X	UC1D1	17.58	5.70	4.42								
	Nonrecurring Currently Combined Network Elements Switch -As-Is Charge			UNC1X	UNCCC		52.73	24.62	9.12	9.12			20.35	21.09		
	EXTENDED 4-WIRE VOICE GRADE LOOP WITH DEDICATED DS1 INTEROFFICE TRANSPORT w/ 3/1 MUX															
	First 4-Wire Analog Voice Grade Local Loop in Combination - Zone 1		1	UNCVX	UEAL4	24.70	108.76	35.47	72.94	10.86			20.35	21.09		
	First 4-Wire Analog Voice Grade Local Loop in Combination - Zone 2		2	UNCVX	UEAL4	32.26	108.76	35.47	72.94	10.86			20.35	21.09		
	First 4-Wire Analog Voice Grade Local Loop in Combination - Zone 3		3	UNCVX	UEAL4	42.18	108.76	35.47	72.94	10.86			20.35	21.09		
	First Interoffice Transport - Dedicated - DS1 combination - Per Mile Per Month			UNC1X	1L5XX	0.3562										
	First Interoffice Transport - Dedicated - DS1 - Facility Termination Per Month			UNC1X	U1TF1	77.86	171.24	113.12	70.07	30.90			20.35	21.09		
	Per each 1/0 Channel System in combination Per Month			UNC1X	MQ1	80.77	105.76	14.48	3.04	2.74						
	Per each Voice Grade COCI in combination - per month			UNCVX	1D1VG	0.91	5.70	4.42								
	3/1 Channel System in combination per month			UNC3X	MQ3	222.98	156.02	49.41	17.12	6.77			36.84	36.84		
	Per each DS1 COCI in combination per month			UNC1X	UC1D1	17.58	5.70	4.42								
	Additional 4-Wire Analog Voice Grade Loop in same DS1 Interoffice Transport Combination - Zone 1		1	UNCVX	UEAL4	24.70	108.76	35.47	72.94	10.86			20.35	21.09		
	Additional 4-Wire Analog Voice Grade Loop in same DS1 Interoffice Transport Combination - Zone 2		2	UNCVX	UEAL4	32.26	108.76	35.47	72.94	10.86			20.35	21.09		

CATEGORY	RATE ELEMENTS	Interim	Zone	BCS	USOC	RATES ($)					Svc Order Submitted Elec per LSR	Svc Order Submitted Manually per LSR	Attachment: 2 Incremental Charge - Manual Svc Order vs. Electronic-1st	Attachment: 2 Incremental Charge - Manual Svc Order vs. Electronic-Add'l	Exhibit: A Incremental Charge - Manual Svc Order vs. Electronic-Disc 1st	Exhibit: A Incremental Charge - Manual Svc Order vs. Electronic-Disc Add'l
						Rec	Nonrecurring First	Nonrecurring Add'l	Nonrecurring Disconnect First	Nonrecurring Disconnect Add'l	OSS Rates ($) SOMEC	OSS Rates ($) SOMAN	OSS Rates ($) SOMAN	OSS Rates ($) SOMAN	OSS Rates ($) SOMAN	OSS Rates ($) SOMAN
	Additional 4-Wire Analog Voice Grade Loop in same DS1 Interoffice Transport Combination - Zone 3		3	UNCVX	UEAL4	42.18	108.76	35.47	72.94	10.86			20.35	21.09		
	Each Additional DS1 Interoffice Channel per mile in same 3/1 Channel System per month			UNC1X	1L5XX	0.3562										
	Each Additional DS1 Interoffice Channel Facility Termination in same 3/1 Channel System per month			UNC1X	U1TF1	77.86	171.24	113.12	70.07	30.90			20.35	21.09		
	Additional Voice Grade COCI - in combination - per month			UNCVX	1D1VG	0.91	5.70	4.42								
	Nonrecurring Currently Combined Network Elements Switch -As-Is Charge			UNC1X	UNCCC		52.73	24.62	9.12	9.12			20.35	21.09		
	EXTENDED 4-WIRE 56 KBPS DIGITAL LOOP WITH DEDICATED DS1 INTEROFFICE TRANSPORT w/ 3/1 MUX															
	First 4-Wire 56Kbps Digital Grade Local Loop in Combination - Zone 1		1	UNCDX	UDL56	31.10	108.76	35.47	72.94	10.86			20.35	21.09		
	First 4-Wire 56Kbps Digital Grade Local Loop in Combination - Zone 2		2	UNCDX	UDL56	40.61	108.76	35.47	72.94	10.86			20.35	21.09		
	First 4-Wire 56Kbps Digital Grade Local Loop in Combination - Zone 3		3	UNCDX	UDL56	53.11	108.76	35.47	72.94	10.86			20.35	21.09		
	First Interoffice Transport - Dedicated - DS1 combination - Per Mile Per Month			UNC1X	1L5XX	0.3562										
	First Interoffice Transport - Dedicated - DS1 - combination Facility Termination Per Month			UNC1X	U1TF1	77.86	171.24	113.12	70.07	30.90			20.35	21.09		
	Per each 1/0 Channel System in combination Per Month			UNC1X	MQ1	80.77	105.76	14.48	3.04	2.74						
	Per each OCU-DP COCI (data) COCI per month (2.4-64kbs)			UNCDX	1D1DD	0.91	5.70	4.42								
	3/1 Channel System in combination per month			UNC3X	MQ3	222.98	156.02	49.41	17.12	6.77			36.84	36.84		
	Per each DS1 COCI in combination per month			UNC1X	UC1D1	17.58	5.70	4.42								
	Additional 4-Wire 56Kbps Digital Grade Loop in same DS1 Interoffice Transport Combination - Zone 1		1	UNCDX	UDL56	31.10	108.76	35.47	72.94	10.86			20.35	21.09		
	Additional 4-Wire 56Kbps Digital Grade Loop in same DS1 Interoffice Transport Combination - Zone 2		2	UNCDX	UDL56	40.61	108.76	35.47	72.94	10.86			20.35	21.09		
	Additional 4-Wire 56Kbps Digital Grade Loop in same DS1 Interoffice Transport Combination - Zone 3		3	UNCDX	UDL56	53.11	108.76	35.47	72.94	10.86			20.35	21.09		
	OCU-DP COCI (data) COCI in combination per month (2.4-64kbs)			UNCDX	1D1DD	0.91	5.70	4.42								
	Each Additional DS1 Interoffice Channel per mile in same 3/1 Channel System per month			UNC1X	1L5XX	0.3562										
	Each Additional DS1 Interoffice Channel Facility Termination in same 3/1 Channel System per month			UNC1X	U1TF1	77.86	171.24	113.12	70.07	30.90			20.35	21.09		
	Each Additional DS1 COCI in the same 3/1 channel system combination per month			UNC1X	UC1D1	17.58	5.70	4.42								
	Nonrecurring Currently Combined Network Elements Switch -As-Is Charge			UNC1X	UNCCC		52.73	24.62	9.12	9.12			20.35	21.09		
	EXTENDED 4-WIRE 64 KBPS DIGITAL LOOP WITH DEDICATED DS1 INTEROFFICE TRANSPORT w/ 3/1 MUX															
	First 4-Wire 64Kbps Digital Grade Loop in a DS1 Interoffice Transport Combination - Zone 1		1	UNCDX	UDL64	31.10	108.76	35.47	72.94	10.86			20.35	21.09		
	First 4-Wire 64Kbps Digital Grade Loop in a DS1 Interoffice Transport Combination - Zone 2		2	UNCDX	UDL64	40.61	108.76	35.47	72.94	10.86			20.35	21.09		
	First 4-Wire 64Kbps Digital Grade Loop in a DS1 Interoffice Transport Combination - Zone 3		3	UNCDX	UDL64	53.11	108.76	35.47	72.94	10.86			20.35	21.09		
	First Interoffice Transport - Dedicated - DS1 combination - Per Mile Per Month			UNC1X	1L5XX	0.3562										
	First Interoffice Transport - Dedicated - DS1 combination - Facility Termination Per Month			UNC1X	U1TF1	77.86	171.24	113.12	70.07	30.90			20.35	21.09		
	Per each Channel System 1/0 in combination Per Month			UNC1X	MQ1	80.77	105.76	14.48	3.04	2.74						
	Per each OCU-DP COCI (data) in combination - per month (2.4-64kbs)			UNCDX	1D1DD	0.91	5.70	4.42								
	3/1 Channel System in combination per month			UNC3X	MQ3	222.98	156.02	49.41	17.12	6.77			36.84	36.84		
	Per each DS1 COCI in combination per month			UNC1X	UC1D1	17.58	5.70	4.42								
	Additional 4-Wire 64Kbps Digital Grade Loop in same DS1 Interoffice Transport Combination - Zone 1		1	UNCDX	UDL64	31.10	108.76	35.47	72.94	10.86			20.35	21.09		

CATEGORY	RATE ELEMENTS	Interim	Zone	BCS	USOC	RATES ($) Rec	Nonrecurring First	Nonrecurring Add'l	Nonrecurring Disconnect First	Nonrecurring Disconnect Add'l	Svc Order Submitted Elec per LSR	Svc Order Submitted Manually per LSR	Attachment: 2 Incremental Charge - Manual Svc Order vs. Electronic- 1st	Attachment: 2 Incremental Charge - Manual Svc Order vs. Electronic- Add'l	Exhibit: A Incremental Charge - Manual Svc Order vs. Electronic- Disc 1st	Exhibit: A Incremental Charge - Manual Svc Order vs. Electronic- Disc Add'l
											OSS Rates ($)					
											SOMEC	SOMAN	SOMAN	SOMAN	SOMAN	SOMAN
	Additional 4-Wire 64Kbps Digital Grade Loop in same DS1 Interoffice Transport Combination - Zone 2		2	UNCDX	UDL64	40.61	108.76	35.47	72.94	10.86			20.35	21.09		
	Additional 4-Wire 64Kbps Digital Grade Loop in same DS1 Interoffice Transport Combination - Zone 3		3	UNCDX	UDL64	53.11	108.76	35.47	72.94	10.86			20.35	21.09		
	Additional OCU-DP COCI (data) - DS1 to DS0 Channel System combination - per month (2.4-64kbs)			UNCDX	1D1DD	0.91	5.70	4.42								
	Each Additional DS1 Interoffice Channel per mile in same 3/1 Channel System per month			UNC1X	1L5XX	0.3562										
	Each Additional DS1 Interoffice Channel Facility Termination in same 3/1 Channel System per month			UNC1X	U1TF1	77.86	171.24	113.12	70.07	30.90			20.35	21.09		
	Each Additional DS1 COCI in the same 3/1 channel system combination per month			UNC1X	UC1D1	17.58	5.70	4.42								
	Nonrecurring Currently Combined Network Elements Switch -As-Is Charge			UNC1X	UNCCC		52.73	24.62	9.12	9.12			20.35	21.09		
	EXTENDED 2-WIRE ISDN LOOP WITH DS1 INTEROFFICE TRANSPORT w/ 3/1 MUX															
	First 2-Wire ISDN Loop in a DS1 Interoffice Combination Transport - Zone 1		1	UNCNX	U1L2X	22.22	108.76	35.47	72.94	10.86			20.35	21.09		
	First 2-Wire ISDN Loop in a DS1 Interoffice Combination Transport - Zone 2		2	UNCNX	U1L2X	29.02	108.76	35.47	72.94	10.86			20.35	21.09		
	First 2-Wire ISDN Loop in a DS1 Interoffice Combination Transport - Zone 3		3	UNCNX	U1L2X	37.95	108.76	35.47	72.94	10.86			20.35	21.09		
	First Interoffice Transport - Dedicated - DS1 combination - Per Mile per month			UNC1X	1L5XX	0.3562										
	First Interoffice Transport - Dedicated - DS1 combination - Facility Termination per month			UNC1X	U1TF1	77.86	171.24	113.12	70.07	30.90			20.35	21.09		
	Per each Channel System 1/0 in combination - per month			UNC1X	MQ1	80.77	105.76	14.48	3.04	2.74						
	Per each 2-wire ISDN COCI (BRITE) in combination - per month			UNCNX	UC1CA	3.24	5.70	4.42								
	3/1 Channel System in combination per month			UNC3X	MQ3	222.98	156.02	49.41	17.12	6.77			36.84	36.84		
	Per each DS1 COCI in combination per month			UNC1X	UC1D1	17.58	5.70	4.42								
	Additional 2-wire ISDN Loop in same DS1Interoffice Transport Combination - Zone 1		1	UNCNX	U1L2X	22.22	108.76	35.47	72.94	10.86			20.35	21.09		
	Additional 2-wire ISDN Loop in same DS1Interoffice Transport Combination - Zone 2		2	UNCNX	U1L2X	29.02	108.76	35.47	72.94	10.86			20.35	21.09		
	Additional 2-wire ISDN Loop in same DS1Interoffice Transport Combination - Zone 3		3	UNCNX	U1L2X	37.95	108.76	35.47	72.94	10.86			20.35	21.09		
	Additional 2-wire ISDN COCI (BRITE) in same 1/0 channel system combination- per month			UNCNX	UC1CA	3.24	5.70	4.42								
	Each Additional DS1 Interoffice Channel per mile in same 3/1 Channel System per month			UNC1X	1L5XX	0.3562										
	Each Additional DS1 Interoffice Channel Facility Termination in same 3/1 Channel System per month			UNC1X	U1TF1	77.86	171.24	113.12	70.07	30.90			20.35	21.09		
	Each Additional DS1 COCI in the same 3/1 channel system combination per month			UNC1X	UC1D1	17.58	5.70	4.42								
	Nonrecurring Currently Combined Network Elements Switch -As-Is Charge			UNC1X	UNCCC		52.73	24.62	9.12	9.12			20.35	21.09		
	EXTENDED 4-WIRE DS1 LOOP WITH DEDICATED DS1 INTEROFFICE TRANSPORT w/ 3/1 MUX															
	First 4-wire DS1 Digital Lcoal Loop in Combination - Zone 1		1	UNC1X	USLXX	57.73	228.40	161.74	79.87	24.88						
	First 4-wire DS1 Digital Lcoal Loop in Combination - Zone 2		2	UNC1X	USLXX	75.40	228.40	161.74	79.87	24.88						
	First 4-wire DS1 Digital Lcoal Loop in Combination - Zone 3		3	UNC1X	USLXX	98.59	228.40	161.74	79.87	24.88						
	First Interoffice Transport - Dedicated - DS1 combination - Per Mile Per Month			UNC1X	1L5XX	0.3562										
	First Interoffice Transport - Dedicated - DS1 combination - Facility Termination Per Month			UNC1X	U1TF1	77.86	171.24	113.12	70.07	30.90			20.35	21.09		
	3/1 Channel System in combination per month			UNC3X	MQ3	222.98	156.02	49.41	17.12	6.77			36.84	36.84		
	Per each DS1 COCI combination per month			UNC1X	UC1D1	17.58	5.70	4.42								
	Each Additional DS1 Interoffice Channel per mile in same 3/1 Channel System per month			UNC1X	1L5XX	0.3562										

CATEGORY	RATE ELEMENTS	Interim	Zone	BCS	USOC	RATES ($) Rec	Nonrecurring First	Nonrecurring Add'l	Nonrecurring Disconnect First	Nonrecurring Disconnect Add'l	Svc Order Submitted Elec per LSR	Svc Order Submitted Manually per LSR	Attachment: 2 Incremental Charge - Manual Svc Order vs. Electronic-1st	Attachment: 2 Incremental Charge - Manual Svc Order vs. Electronic-Add'l	Exhibit: A Incremental Charge - Manual Svc Order vs. Electronic-Disc 1st	Exhibit: A Incremental Charge - Manual Svc Order vs. Electronic-Disc Add'l
											OSS Rates ($)					
											SOMEC	SOMAN	SOMAN	SOMAN	SOMAN	SOMAN
	Each Additional DS1 Interoffice Channel Facility Termination in same 3/1 Channel System per month			UNC1X	U1TF1	77.86	171.24	113.12	70.07	30.90			20.35	21.09		
	Each Additional DS1 COCI in the same 3/1 channel system combination per month			UNC1X	UC1D1	17.58	5.70	4.42								
	Additional 4-Wire DS1 Digital Local Loop in Combination - Zone 1		1	UNC1X	USLXX	57.73	228.40	161.74	79.87	24.88						
	Additional 4-Wire DS1 Digital Local Loop in Combination - Zone 2		2	UNC1X	USLXX	75.40	228.40	161.74	79.87	24.88						
	Additional 4-Wire DS1 Digital Local Loop in Combination - Zone 3		3	UNC1X	USLXX	98.59	228.40	161.74	79.87	24.88						
	Nonrecurring Currently Combined Network Elements Switch -As-Is Charge			UNC1X	UNCCC		52.73	24.62	9.12	9.12			20.35	21.09		
	EXTENDED 4-WIRE 56 KBPS DIGITAL EXTENDED LOOP WITH DS0 INTEROFFICE TRANSPORT															
	First 4-wire 56 kbps Local Loop in combination - Zone 1		1	UNCDX	UDL56	31.10	108.76	35.47	72.94	10.86						
	First 4-wire 56 kbps Local Loop in combination - Zone 2		2	UNCDX	UDL56	40.61	108.76	35.47	72.94	10.86						
	First 4-wire 56 kbps Local Loop in combination - Zone 3		3	UNCDX	UDL56	53.11	108.76	35.47	72.94	10.86						
	First 4-wiree 56 kbps Interoffice Transport - Dedicated - Per Mile per month			UNCDX	1L5XX	0.0174										
	First 4-wire 56 kbps Interoffice Transport - Dedicated - Facility Termination per month			UNCDX	U1TD5	21.19	79.83	44.08	69.32	31.00			20.35	21.09		
	Nonrecurring Currently Combined Network Elements Switch -As-Is Charge			UNCDX	UNCCC		52.73	24.62	9.12	9.12			20.35	21.09		
	EXTENDED 4-WIRE 64 KBPS DIGITAL EXTENDED LOOP WITH DS0 INTEROFFICE TRANSPORT															
	First 4-wire 64 kbps Local Loop in combination - Zone 1		1	UNCDX	UDL64	31.10	108.76	35.47	72.94	10.86						
	First 4-wire 64 kbps Local Loop in combination - Zone 2		2	UNCDX	UDL64	40.61	108.76	35.47	72.94	10.86						
	First 4-wire 64 kbps Local Loop in combination - Zone 3		3	UNCDX	UDL64	53.11	108.76	35.47	72.94	10.86						
	First I4-wire 65 kbps Interoffice Transport - Dedicated - Per Mile per month			UNCDX	1L5XX	0.0174										
	First 4-wire 64 kbps Interoffice Transport - Dedicated - Facility Termination per month			UNCDX	U1TD6	21.19	79.83	44.08	69.32	31.00			20.35	21.09		
	Nonrecurring Currently Combined Network Elements Switch -As-Is Charge			UNCDX	UNCCC		52.73	24.62	9.12	9.12			20.35	10.54		
ADDITIONAL NETWORK ELEMENTS																
	When used as a part of a currently combined facility, the non-recurrng charges do not apply, but a Switch As Is charge does apply.															
	When used as ordinarily combined network elements in All States, the non-recurring charges apply and the Switch As Is Charge does not.															
	Nonrecurring Currently Combined Network Elements "Switch As Is" Charge (One applies to each combination)															
	Nonrecurring Currently Combined Network Elements Switch -As-Is Charge - 2 wire/4-Wire VG			UNCVX	UNCCC		52.73	24.62	9.12	9.12			53.73	24.62		
	Nonrecurring Currently Combined Network Elements Switch -As-Is Charge - 56/64 kbps			UNCDX	UNCCC		52.73	24.62	9.12	9.12			20.35	10.54		
	Nonrecurring Currently Combined Network Elements Switch -As-Is Charge - DS1			UNC1X	UNCCC		52.73	24.62	9.12	9.12			53.73	24.62		
	Nonrecurring Currently Combined Network Elements Switch -As-Is Charge - DS3			UNC3X	UNCCC		52.73	24.62	9.12	9.12			53.73	24.62		
	Nonrecurring Currently Combined Network Elements Switch -As-Is Charge - STS1			UNCSX	UNCCC		52.73	24.62	9.12	9.12			53.73	24.62		
	Optional Features & Functions:															
	Clear Channel Capability Extended Frame Option - per DS1	I		U1TD1, ULDD1,UNC1X	CCOEF		0I	0I	0I	0I						
	Clear Channel Capability Super FrameOption - per DS1	i		U1TD1, ULDD1,UNC1X	CCOSF		0I	0I	0I	0I						
	Clear Channel Capability (SF/ESF) Option - Subsequent Activity - per DS1	I		ULDD1, U1TD1, UNC1X, USL	NRCCC		185.16S	23.85S	2.03S	0.79S			45.68	1.76		
	C-bit Parity Option - Subsequent Activity - per DS3	i		U1TD3, ULDD3, UE3, UNC3X	NRCC3		219.46S	7.68S	.7637S	OS			45.68	1.76		
	MULTIPLEXERS															
	DS1 to DS0 Channel System per month			UNC1X	MQ1	80.77	105.76	14.48	3.04	2.74			20.35	9.80		
	OCU-DP COCI (data) - DS1 to DS0 Channel System - per month (2.4-64kbs) used for a Local Loop			UDL	1D1DD	1.82	6.07	4.66						9.80		

UNBUNDLED NETWORK ELEMENTS - Tennessee														Attachment: 2		Exhibit: A	
CATEGORY		RATE ELEMENTS	Interim	Zone	BCS	USOC	RATES ($)					Svc Order Submitted Elec per LSR	Svc Order Submitted Manually per LSR	Incremental Charge - Manual Svc Order vs. Electronic-1st	Incremental Charge - Manual Svc Order vs. Electronic-Add'l	Incremental Charge - Manual Svc Order vs. Electronic-Disc 1st	Incremental Charge - Manual Svc Order vs. Electronic-Disc Add'l
							Rec	Nonrecurring		Nonrecurring Disconnect		OSS Rates ($)					
								First	Add'l	First	Add'l	SOMEC	SOMAN	SOMAN	SOMAN	SOMAN	SOMAN
		OCU-DP COCI (data) - DS1 to DS0 Channel System - per month (2.4-64kbs) used for connection to a channelized DS1 Local Channel in the same SWC as collocation			U1TUD	1D1DD	1.82	6.07	4.66								
		2-wire ISDN COCI (BRITE) - DS1 to DS0 Channel Systsem - per month for a Local Loop			UDN	UC1CA	3.10	6.07	4.66								
		2-wire ISDN COCI (BRITE) - DS1 to DS0 Channel Systsem - per month used for connection to a channelized DS1 Local Channel in the same SWC as collocation			U1TUB	UC1CA	3.10	6.07	4.66								
		Voice Grade COCI - DS1 to DS0 Channel System - per month used for a Local Loop			UEA	1D1VG	0.91	6.07	4.66								
		Voice Grade COCI - DS1 to DS0 Channel System - per month used for connection to a channelized DS1 Local Channel in the same SWC as collocation			U1TUC	1D1VG	0.91	6.07	4.66								
		DS3 to DS1 Channel System per month			UNC3X	MQ3	222.98	156.02	49.41	17.12	6.77			20.35	9.80		
		STS-1 to DS1 Channel System per month			UNCSX	MQ3	222.98	156.02	49.41	17.12	6.77			20.35	9.80		
		DS1 COCI used with Loop per month			USL	UC1D1	17.58	6.07	4.66								
		DS1 COCI (used for connection to a channelized DS1 Local Channel in the same SWC as collocation) per month			U1TUA	UC1D1	17.58	6.07	4.66								
		DS1 COCI used with Interoffice Channel per month			U1TD1	UC1D1	17.58	6.07	4.66								
		DS3 Interface Unit (DS1 COCI) used with Local Channel per month			ULDD1	UC1D1	17.58	6.07	4.66								
UNBUNDLED LOCAL EXCHANGE SWITCHING(PORTS)																	
	Exchange Ports																
	NOTE: Although the Port Rate includes all available features in GA, KY, LA & TN, the desired features will need to be ordered using retail USOCs																
	2-WIRE VOICE GRADE LINE PORT RATES (RES)																
		Exchange Ports - 2-Wire Analog Line Port- Res.			UEPSR	UEPRL	1.89	9.93	9.19	3.66	2.92			20.35	10.54	13.32	1.40
		Exchange Ports - 2-Wire Analog Line Port with Caller ID - Res.			UEPSR	UEPRC	1.89	9.93	9.19	3.66	2.92			20.35	10.54	13.32	1.40
		Exchange Ports - 2-Wire Analog Line Port outgoing only - Res.			UEPSR	UEPRO	1.89	9.93	9.19	3.66	2.92			20.35	10.54	13.32	1.40
		Exchange Ports - 2-Wire VG unbundled TN extended local dialing parity Port with Caller ID - Res.			UEPSR	UEPAQ	1.89	9.93	9.19	3.66	2.92			20.35	10.54	13.32	1.40
		Exchange Ports - 2-Wire VG unbundled Tennessee Area Plus with Caller ID - Res (AC7)			UEPSR	UEPAH	1.89	9.93	9.19	3.66	2.92			20.35	10.54	13.32	1.40
		Exchange Ports - 2-Wire VG unbundled Tennessee Area Calling port with Caller ID - Res (F2R)			UEPSR	UEPAK	1.89	9.93	9.19	3.66	2.92			20.35	10.54	13.32	1.40
		Exchange Ports - 2-Wire VG unbundled Tennessee Area Calling port with Caller ID - Res (TACER)			UEPSR	UEPAL	1.89	9.93	9.19	3.66	2.92			20.35	10.54	13.32	1.40
		Exchange Ports - 2-Wire VG unbundled Tennessee Area Calling port with Caller ID - Res (TACSR)			UEPSR	UEPAM	1.89	9.93	9.19	3.66	2.92			20.35	10.54	13.32	1.40
		Exchange Ports - 2-Wire VG unbundled Tennessee Area Calling port with Caller ID - Res (1MF2X)			UEPSR	UEPAN	1.89	9.93	9.19	3.66	2.92			20.35	10.54	13.32	1.40
		Exchange Ports - 2-Wire VG unbundled Tennessee Area Calling port with Caller ID - Res (2MR)			UEPSR	UEPAO	1.89	9.93	9.19	3.66	2.92			20.35	10.54	13.32	1.40
		Exchange Ports - 2-Wire VG unbundled res, low usage line port with Caller ID (LUM)			UEPSR	UEPAP	1.89	9.93	9.19	3.66	2.92			20.35	10.54	13.32	1.40
		Exchange Port - 2-Wire VG Tennessee Residence Dialing Plan without Caller ID			UEPSR	UEPWN	1.89	9.93	9.19	3.66	2.92			20.35	10.54	13.32	1.40
		Exchange Port - 2-Wire VG Tennessee Residence Area Plus without Caller ID			UEPSR	UEPRR	1.89	9.93	9.19	3.66	2.92			20.35	10.54	13.32	1.40
		2-Wire voice unbundled Low Usage Line Port without Caller ID Capability			UEPSR	UEPRT	1.89	9.93	9.19	3.66	2.92			20.35	10.54	13.32	1.40
		Subsequent Activity			UEPSR	USASC	0.00	0.00	0.00					20.35	10.54	13.32	1.40
	FEATURES																
		All Available Vertical Features			UEPSR	UEPVF	0.00	0.00	0.00					20.35	10.54	13.32	1.40
	2-WIRE VOICE GRADE LINE PORT RATES (BUS)																
		Exchange Ports - 2-Wire Analog Line Port without Caller ID - Bus			UEPSB	UEPBL	1.89	9.93	9.19	3.66	2.92			20.35	10.54	13.32	1.40

UNBUNDLED NETWORK ELEMENTS - Tennessee														Attachment: 2		Exhibit: A	
CATEGORY		RATE ELEMENTS	Interim	Zone	BCS	USOC	RATES ($)					Svc Order Submitted Elec per LSR	Svc Order Submitted Manually per LSR	Incremental Charge - Manual Svc Order vs. Electronic-1st	Incremental Charge - Manual Svc Order vs. Electronic-Add'l	Incremental Charge - Manual Svc Order vs. Electronic-Disc 1st	Incremental Charge - Manual Svc Order vs. Electronic-Disc Add'l
							Rec	Nonrecurring		Nonrecurring Disconnect		OSS Rates ($)					
								First	Add'l	First	Add'l	SOMEC	SOMAN	SOMAN	SOMAN	SOMAN	SOMAN
		Exchange Ports - 2-Wire VG unbundled Line Port with unbundled port with Caller+E484 ID - Bus.			UEPSB	UEPBC	1.89	9.93	9.19	3.66	2.92			20.35	10.54	13.32	1.40
		Exchange Ports - 2-Wire Analog Line Port outgoing only - Bus.			UEPSB	UEPBO	1.89	9.93	9.19	3.66	2.92			20.35	10.54	13.32	1.40
		Exchange Ports - 2-Wire VG unbundled TN extended local dialing parity Port with Caller ID - Bus.			UEPSB	UEPAV	1.89	9.93	9.19	3.66	2.92			20.35	10.54	13.32	1.40
		Exhange Ports - 2-Wire VG unbundled incoming only port with Caller ID - Bus			UEPSB	UEPB1	1.89	9.93	9.19	3.66	2.92			20.35	10.54	13.32	1.40
		Exchange Ports - 2-Wire VG unbundled TN Bus 2-Way Area Calling Port Economy Option - Bus (TACC1)			UEPSB	UEPAC	1.89	9.93	9.19	3.66	2.92			20.35	10.54	13.32	1.40
		Exchange Ports - 2-Wire VG unbundled TN Bus 2-Way Area Calling Port Standard Option - Bus (TACC2)			UEPSB	UEPAD	1.89	9.93	9.19	3.66	2.92			20.35	10.54	13.32	1.40
		Exchange Ports - 2-W VG unbundled TN Bus 2-Way Collierville & Memphis Local Calling Port - Bus (B2F)			UEPSB	UEPAE	1.89	9.93	9.19	3.66	2.92			20.35	10.54	13.32	1.40
		Exchange Ports - 2-W VG unbundled TN Bus 2-Way Collierville & Memphis Local Calling Port			UEPSB	UEPB2	1.89	9.93	9.19	3.66	2.92			20.35	10.54	13.32	1.40
		Exchange Ports - 2-W VG unbundled TN, Business Line Inward, Collierville & Memphis Local Calling Plan			UEPSB	UEPB3	1.89	9.93	9.19	3.66	2.92			20.35	10.54	13.32	1.40
		Exchange Ports - 2-Wire Voice Tennessee Business Dialing Plan without Caller ID			UEPSB	UEPWO	1.89	9.93	9.19	3.66	2.92			20.35	10.54	13.32	1.40
		2-Wire voice unbundled Incoming Only Port without Caller ID Capability			UEPSB	UEPBE	1.89	9.93	9.19	3.66	2.92			20.35	10.54	13.32	1.40
		Subsequent Activity			UEPSB	USASC	0.00	0.00	0.00					20.35	10.54	13.32	1.40
	FEATURES																
		All Available Vertical Features			UEPSB	UEPVF	0.00	0.00	0.00					20.35	10.54	13.32	1.40
	EXCHANGE PORT RATES (DID & PBX)																
		2-Wire VG Unbundled 2-Way PBX Trunk - Res			UEPSE	UEPRD	1.79	9.93	9.19	3.66	2.92			20.35	10.54	13.32	1.40
		2-Wire VG Line Side Unbundled 2-Way PBX Trunk - Bus			UEPSP	UEPPC	1.79	9.93	9.19	3.66	2.92			20.35	10.54	13.32	1.40
		2-Wire VG Line Side Unbundled Outward PBX Trunk - Bus			UEPSP	UEPPO	1.79	9.93	9.19	3.66	2.92			20.35	10.54	13.32	1.40
		2-Wire VG Line Side Unbundled Incoming PBX Trunk - Bus			UEPSP	UEPP1	1.79	9.93	9.19	3.66	2.92			20.35	10.54	13.32	1.40
		2-Wire Analog Long Distance Terminal PBX Trunk - Bus			UEPSP	UEPLD	1.79	9.93	9.19	3.66	2.92			20.35	10.54	13.32	1.40
		2-Wire Analog TN 2-Way Calling Plan PBX Trunk - Bus			UEPSP	UEPT2	1.79	9.93	9.19	3.66	2.92			20.35	10.54	13.32	1.40
		2-Wire TN Outward Calling Plan PBX Trunk - Bus			UEPSP	UEPTO	1.79	9.93	9.19	3.66	2.92			20.35	10.54	13.32	1.40
		2-Wire Voice Unbundled PBX LD Terminal Ports			UEPSP	UEPLD	1.79	9.93	9.19	3.66	2.92			20.35	10.54	13.32	1.40
		2-Wire Voice Unbundled 2-Way PBX Tennessee Calling Port			UEPSP	UEPT2	1.79	9.93	9.19	3.66	2.92			20.35	10.54	13.32	1.40
		2-Wire Voice Unbundled 1-Way Outgoing PBX Tennessee Calling Port			UEPSP	UEPTO	1.79	9.93	9.19	3.66	2.92			20.35	10.54	13.32	1.40
		2-Wire Vice Unbundled 2-Way PBX Usage Port			UEPSP	UEPXA	1.79	9.93	9.19	3.66	2.92			20.35	10.54	13.32	1.40
		2-Wire Voice Unbundled PBX Toll Terminal Hotel Ports			UEPSP	UEPXB	1.79	9.93	9.19	3.66	2.92			20.35	10.54	13.32	1.40
		2-Wire Voice Unbundled PBX LD DDD Terminals Port			UEPSP	UEPXC	1.79	9.93	9.19	3.66	2.92			20.35	10.54	13.32	1.40
		2-Wire Voice Unbundled PBX LD Terminal Switchboard Port			UEPSP	UEPXD	1.79	9.93	9.19	3.66	2.92			20.35	10.54	13.32	1.40
		2-Wire Voice Unbundled PBX LD Terminal Switchboard IDD Capable Port			UEPSP	UEPXE	1.79	9.93	9.19	3.66	2.92			20.35	10.54	13.32	1.40
		2-Wire Voice Unbundled 2-Way PBX Hotel/Hospital Economy Administrative Calling Port			UEPSP	UEPXL	1.79	9.93	9.19	3.66	2.92			20.35	10.54	13.32	1.40
		2-Wire Voice Unbundled 2-Way PBX Hotel/Hospital Economy Room Calling Port			UEPSP	UEPXM	1.79	9.93	9.19	3.66	2.92			20.35	10.54	13.32	1.40
		2-W Voice Unbundled 1-Way Out PBX Hotel/Hospital Economy Administrative Calling Port TN Calling Port			UEPSP	UEPXN	1.79	9.93	9.19	3.66	2.92			20.35	10.54	13.32	1.40
		2-Wire Voice Unbundled 1-Way Outgoing PBX Hotel/Hospital Discount Room Calling Port			UEPSP	UEPXO	1.79	9.93	9.19	3.66	2.92			20.35	10.54	13.32	1.40
		Unbundled Exchange Ports, PBX Trunk Combination, Collierville and Memphis Local Calling Plan			UEPSP	UEPA6	1.79	9.93	9.19	3.66	2.92			20.35	10.54	13.32	1.40
		Unbundled Exchange Ports, PBX Trunk Combination, first trunk, Collierville and Memphis Local Calling Plan			UEPSP	UEPA7	1.79	9.93	9.19	3.66	2.92			20.35	10.54	13.32	1.40
		2-Wire Voice Unbundled 1-Way Outgoing PBX Measured Port			UEPSP	UEPXS	1.79	9.93	9.19	3.66	2.92			20.35	10.54	13.32	1.40
		2-Wire Voice Unbundled PBX Collierville and Memphis Calling Port			UEPSP	UEPXU	1.79	9.93	9.19	3.66	2.92			20.35	10.54	13.32	1.40

CATEGORY	RATE ELEMENTS	Interim	Zone	BCS	USOC	RATES ($)					Svc Order Submitted Elec per LSR	Svc Order Submitted Manually per LSR	Incremental Charge - Manual Svc Order vs. Electronic-1st	Incremental Charge - Manual Svc Order vs. Electronic-Add'l	Incremental Charge - Manual Svc Order vs. Electronic-Disc 1st	Incremental Charge - Manual Svc Order vs. Electronic-Disc Add'l
						Rec	Nonrecurring		Nonrecurring Disconnect		OSS Rates ($)					
							First	Add'l	First	Add'l	SOMEC	SOMAN	SOMAN	SOMAN	SOMAN	SOMAN
	2-Wire Voice Unbundled 2-Way PBX Tennessee RegionServ Calling Port			UEPSP	UEPXV	1.79	9.93	9.19	3.66	2.92			20.35	10.54	13.32	1.40
	Subsequent Activity			UEPSP	USASC	0.00	0.00	0.00					20.35	10.54	13.32	1.40
FEATURES																
	All Available Vertical Features			UEPSP UEPSE	UEPVF	0.00	0.00	0.00					20.35	10.54	13.32	1.40
EXCHANGE PORT RATES (COIN)																
	Exchange Ports - Coin Port					2.11	9.93	9.19	3.66	2.92			20.35	10.54	13.32	1.40
NOTE: Transmission/usage charges associated with POTS circuit switched usage will also apply to circuit switched voice and/or circuit switched data transmission by B-Channels associated with 2-wire ISDN ports.																
NOTE: Access to B Channel or D Channel Packet capabilities will be available only through BFR/New Business Request Process. Rates for the packet capabilities will be determined via the Bona Fide Request/New Business Request Process.																
UNBUNDLED LOCAL EXCHANGE SWITCHING(PORTS)																
EXCHANGE PORT RATES																
The DS1 Port rates below for 4-Wire DDITS Trunk Port and 4-Wire ISDN Port in this rate exhibit apply to the embedded base in place as of 10/2/03 until 4/1/04. After 4/1/04 these rates shall revert to tariff rates or a separate agreement.																
Requests for 4-Wire DDITS Trunk Ports with 4-Wire ISDN DS1 Ports after the effective date of this amendment shall be provided pursuant to a separate agreement or tariff at BellSouth's discretion.																
	Exchange Ports - 2-Wire DID Port			UEPEX	UEPP2	8.97	47.75	47.01	9.21	8.47			20.35	10.54	13.32	1.40
	Exchange Ports - DDITS Port - 4-Wire DS1 Port with DID capability (E:4/1/2004)			UEPDD	UEPDD	35.74	75.93	38.15	8.77	8.04			20.35	10.54	13.32	1.40
	Exchange Ports - 2-Wire ISDN Port (See Notes below.)			UEPTX, UEPSX	U1PMA	16.26	30.23	29.49	4.10	4.10			20.35	10.54	13.32	1.40
	All Features Offered			UEPTX, UEPSX	UEPVF	0.00	0.00	0.00								
	Exchange Ports - 2-Wire ISDN Port -- Channel Profiles			UEPTX, UEPSX	U1UMA	0.00	0.00	0.00								
NOTE: Transmission/usage charges associated with POTS circuit switched usage will also apply to circuit switched voice and/or circuit switched data transmission by B-Channels associated with 2-wire ISDN ports.																
NOTE: Access to B Channel or D Channel Packet capabilities will be available only through BFR/New Business Request Process. Rates for the packet capabilities will be determined via the Bona Fide Request/New Business Request Process.																
EXCHANGE PORT RATES (continued)																
	Exchange Ports - 4-Wire ISDN DS1 Port with Detailed E911 Locator Capability (E:4/1/2004)			UEPEX	UEPEX	75.04	148.66	147.18	38.46	36.98			20.35	10.54	13.32	1.40
	Exchange Ports - 4-Wire ISDN DS1 Port (E:4/1/2004)			UEPDX	UEPDX	75.04	148.66	147.18	38.46	36.98			20.35	10.54		
	Physical Collocation - DS1 Cross-Connects			UEPEX UEPDX	PE1P1	1.51	53.27	40.16								
	Virtual collocation - Special Access & UNE, cross-connect per DS1			UEPEX UEPDX	CNC1X	1.32	32.22	17.76	10.46	8.75						
Detailed E911 with Locator Capability (required with UEPEX port)																
	Unbundled Exchange Ports, 4-Wire ISDN DS1 Port - E911 Locator Capability - Initial Profile Establishment per CLEC per State			UEPEX	UEP1A	0.00	1,699.00		147.00				20.35	10.54		
	Unbundled Exchange Ports, 4-Wire ISDN DS1 Port - E911 Locator Capability - Subsequent Profile Changes, Additions, Deletions			UEPEX	UEP1B	0.00	164.94						20.35	10.54		
New or Additional PRI Telephone Numbers																
	Unbundled Exchange Ports, 4-Wire ISDN DS1 Port - E911 Locator Capability 2-way Telephone Numbers, per number in E911 profile [New or Additional]			UEPEX	UEP1C	0.0755	0.94						20.35	10.54		
	Unbundled Exchange Ports, 4-Wire ISDN DS1 Port - E911 Locator Capability - Outdial Telephone Numbers, per number in E911 profile [New or Additional]			UEPEX	UEP1D	0.0755	22.36	22.36					20.35	10.54		
	Unbundled Exchange Ports, 4-Wire ISDN DS1 Port - Inward Telephone Numbers - Inward Data Only Option [New or Additional]			UEPDX	UEP1E	0.00	0.94						20.35	10.54		
	Exchange Ports - 4-Wire ISDN DS1 Port - Subsequent [New] Inward Tel Numbers [Customer Testing Purposes]			UEPEX	PR7ZT	0.00	44.71	44.70					20.35	10.54		
LOCAL NUMBER PORTABILITY																
	Local Number Portability (1 per port)			UEPEX UEPDX	LNPCN	1.75							20.35	10.54		
INTERFACE (Provsioning Only)																
	Voice/Data			UEPEX	PR71V	0.00	0.00	0.00					20.35	10.54		
	Digital Data			UEPEX	PR71D	0.00	0.00	0.00					20.35	10.54		
	Inward Data			UEPDX	PR71E	0.00	0.00	0.00					20.35	10.54		
New or Additional Channel																
	New or Additional - Voice/Data "B" Channel			UEPEX	PR7BV	0.00	28.39						20.35	10.54		
	New or Additional - Digital Data "B" Channel			UEPEX	PR7BF	0.00	29.11						20.35	10.54		
	New or Additional Inward Data "B" Channel			UEPDX	PR7BD	0.00	29.39						20.35	10.54		
	New or Additional Useage Sensitive Voice Data "B" Channel			UEPEX	PR7BS	0.00	29.39						20.35	10.54		
	New or Additional Useage Sensitive Digital Data "B" Channel			UEPEX	PR7BU	0.00	29.39						20.35	10.54		

CATEGORY	RATE ELEMENTS	Interim	Zone	BCS	USOC	RATES ($) Rec	Nonrecurring First	Nonrecurring Add'l	Nonrecurring Disconnect First	Nonrecurring Disconnect Add'l	Svc Order Submitted Elec per LSR	Svc Order Submitted Manually per LSR	Attachment: 2 Incremental Charge - Manual Svc Order vs. Electronic-1st	Attachment: 2 Incremental Charge - Manual Svc Order vs. Electronic-Add'l	Exhibit: A Incremental Charge - Manual Svc Order vs. Electronic-Disc 1st	Exhibit: A Incremental Charge - Manual Svc Order vs. Electronic-Disc Add'l
											OSS Rates ($)					
											SOMEC	SOMAN	SOMAN	SOMAN	SOMAN	SOMAN
	New or Additional PRI "D" Channel			UEPEX	PR7EX	0.00	29.39						20.35	10.54		
CALL TYPES																
	Inward			UEPEX UEPDX	PR7C1	0.00	0.00	0.00								
	Outward			UEPEX	PR7CO	0.00	0.00	0.00								
	Two-way			UEPEX	PR7CC	0.00	0.00	0.00								
UNBUNDLED PORT with REMOTE CALL FORWARDING CAPABILITY																
UNBUNDLED REMOTE CALL FORWARDING SERVICE - RESIDENCE																
	Unbundled Remote Call Forwarding Service, Area Calling, Res			UEPVR	UERAC	1.89	9.93	9.19	3.66	2.92			20.35	10.54	13.32	1.40
	Unbundled Remote Call Forwarding Service, Local Calling - Res			UEPVR	UERLC	1.89	9.93	9.19	3.66	2.92			20.35	10.54	13.32	1.40
	Unbundled Remote Call Forwarding Service, InterLATA - Res			UEPVR	UERTE	1.89	9.93	9.19	3.66	2.92			20.35	10.54	13.32	1.40
	Unbundled Remote Call Forwarding Service, IntraLATA - Res			UEPVR	UERTR	1.89	9.93	9.19	3.66	2.92			20.35	10.54	13.32	1.40
Non-Recurring																
	Unbundled Remote Call Forwarding Service - Conversion - Switch-as-is			UEPVR	USAC2		1.03	0.29					20.35	10.54	13.32	1.40
	Unbundled Remote Call Forwarding Service - Conversion with allowed change (PIC and LPIC)			UEPVR	USACC		1.03	0.29								
UNBUNDLED REMOTE CALL FORWARDING - Bus																
	Unbundled Remote Call Forwarding Service, Area Calling - Bus			UEPVB	UERAC	1.89	9.93	9.19	3.66	2.92			20.35	10.54	13.32	1.40
	Unbundled Remote Call Forwarding Service, Local Calling - Bus			UEPVB	UERLC	1.89	9.93	9.19	3.66	2.92			20.35	10.54	13.32	1.40
	Unbundled Remote Call Forwarding Service, InterLATA - Bus			UEPVB	UERTE	1.89	9.93	9.19	3.66	2.92			20.35	10.54	13.32	1.40
	Unbundled Remote Call Forwarding Service, IntraLATA - Bus			UEPVB	UERTR	1.89	9.93	9.19	3.66	2.92			20.35	10.54	13.32	1.40
	Unbundled Remote Call Forwarding Service Expanded and Exception Local Calling			UEPVB	UERVJ	1.89	9.93	9.19	3.66	2.92			20.35	10.54	13.32	1.40
Non-Recurring																
	Unbundled Remote Call Forwarding Service - Conversion - Switch-as-is			UEPVB	USAC2		1.03	0.29					20.35	10.54	13.32	1.40
	Unbundled Remote Call Forwarding Service - Conversion with allowed change (PIC and LPIC)			UEPVB	USACC		1.03	0.29								
UNBUNDLED LOCAL SWITCHING, PORT USAGE																
End Office Switching (Port Usage)																
	End Office Switching Function, Per MOU					0.0008041										
Tandem Switching (Port Usage) (Local or Access Tandem)																
	Tandem Switching Function Per MOU					0.0009778										
	Tandem Switching Function Per MOU (Melded)					0.000380364										
	Melded Factor: 38.90% of the Tandem Rate															
Common Transport																
	Common Transport - Per Mile, Per MOU					0.0000064										
	Common Transport - Facilities Termination Per MOU					0.0003871										
UNBUNDLED PORT/LOOP COMBINATIONS - COST BASED RATES																
Cost Based Rates are applied where BellSouth is required by FCC and/or State Commission rule to provide Unbundled Local Switching or Switch Ports.																
Features shall apply to the Unbundled Port/Loop Combination - Cost Based Rate section in the same manner as they are applied to the Stand-Alone Unbundled Port section of this Rate Exhibit.																
End Office and Tandem Switching Usage and Common Transport Usage rates in the Port section of this rate exhibit shall apply to all combinations of loop/port network elements except for UNE Coin Port/Loop Combinations.																
The first and additional Port nonrecurring charges apply to Not Currently Combined Combos. For Currently Combined Combos the nonrecurring charges shall be those identified in the Nonrecurring - Currently Combined sections.																
2-WIRE VOICE GRADE LOOP WITH 2-WIRE LINE PORT (RES)																
UNE Port/Loop Combination Rates																
	2-Wire VG Loop/Port Combo - Zone 1		1			14.18										
	2-Wire VG Loop/Port Combo - Zone 2		2			18.01										
	2-Wire VG Loop/Port Combo - Zone 3		3			23.02										
UNE Loop Rates																
	2-Wire Voice Grade Loop (SL1) - Zone 1		1	UEPRX	UEPLX	12.48										
	2-Wire Voice Grade Loop (SL1) - Zone 2		2	UEPRX	UEPLX	16.31										
	2-Wire Voice Grade Loop (SL1) - Zone 3		3	UEPRX	UEPLX	21.32										
2-Wire Voice Grade Line Port Rates (Res)																
	2-Wire voice unbundled port - residence			UEPRX	UEPRL	1.70	22.14	15.25	8.45	3.91		15.69				
	2-Wire voice unbundled port with Caller ID - res			UEPRX	UEPRC	1.70	22.14	15.25	8.45	3.91		15.69				
	2-Wire voice unbundled port outgoing only - res			UEPRX	UEPRO	1.70	22.14	15.25	8.45	3.91		15.69				

UNBUNDLED NETWORK ELEMENTS - Tennessee														Attachment: 2		Exhibit: A	
CATEGORY		RATE ELEMENTS	Interim	Zone	BCS	USOC	RATES ($)					Svc Order Submitted Elec per LSR	Svc Order Submitted Manually per LSR	Incremental Charge - Manual Svc Order vs. Electronic-1st	Incremental Charge - Manual Svc Order vs. Electronic-Add'l	Incremental Charge - Manual Svc Order vs. Electronic-Disc 1st	Incremental Charge - Manual Svc Order vs. Electronic-Disc Add'l
							Rec	Nonrecurring		Nonrecurring Disconnect		OSS Rates ($)					
								First	Add'l	First	Add'l	SOMEC	SOMAN	SOMAN	SOMAN	SOMAN	SOMAN
		2-Wire voice Grade unbundled Tennessee extended local dialing parity port with Caller ID - res			UEPRX	UEPAQ	1.70	22.14	15.25	8.45	3.91		15.69				
		2-Wire voice unbundled Tennessee Area Plus with Caller ID - res (AC7)			UEPRX	UEPAH	1.70	22.14	15.25	8.45	3.91		15.69				
		2-Wire voice unbundled Tennessee Area Calling port with Caller ID - res (F2R)			UEPRX	UEPAK	1.70	22.14	15.25	8.45	3.91		15.69				
		2-Wire voice unbundled Tennessee Area Calling port with Caller ID - res (TACER)			UEPRX	UEPAL	1.70	22.14	15.25	8.45	3.91		15.69				
		2-Wire voice unbundled Tennessee Area Calling port with Caller ID - res (TACSR)			UEPRX	UEPAM	1.70	22.14	15.25	8.45	3.91		15.69				
		2-Wire voice unbundled Tennessee Area Calling port with Caller ID - res (1MF2X)			UEPRX	UEPAN	1.70	22.14	15.25	8.45	3.91		15.69				
		2-Wire voice unbundled Tennessee Area Calling port with Caller ID - res (2MR)			UEPRX	UEPAO	1.70	22.14	15.25	8.45	3.91		15.69				
		2-Wire voice unbundles res, low usage line port with Caller ID (LUM)			UEPRX	UEPAP	1.70	22.14	15.25	8.45	3.91		15.69				
		2-Wire Voice Unbundled Tennessee Residence Dialing Plan without Caller ID			UEPRX	UEPWN	1.70	22.14	15.25	8.45	3.91		15.69				
		2-Wire voice unbundled Tennessee Area Plus Port without Caller ID Capability			UEPRX	UEPRR	1.70	22.14	15.25	8.45	3.91		15.69				
		2-Wire voice unbundled Low Usage Line Port without Caller ID Capability			UEPRX	UEPRT	1.70	22.14	15.25	8.45	3.91		15.69				
	FEATURES																
		All Features Offered			UEPRX	UEPVF	0.00	0.00	0.00				15.69				
	LOCAL NUMBER PORTABILITY																
		Local Number Portability (1 per port)			UEPRX	LNPCX	0.35										
	NONRECURRING CHARGES (NRCs) - CURRENTLY COMBINED																
		2-Wire Voice Grade Loop / Line Port Combination - Conversion - Switch-as-is			UEPRX	USAC2		1.03	0.29				15.69				
		2-Wire Voice Grade Loop / Line Port Combination - Conversion - Switch with change			UEPRX	USACC		1.03	0.29				15.69				
		2-Wire Voice Grade Loop / Line Port Combination - Conversion - Subsequent Database Update						0.76					15.69				
	ADDITIONAL NRCs																
		2-Wire Voice Grade Loop/Line Port Combination - Subsequent Activity			UEPRX	USAS2	0.00	0.00	0.00				15.69				
		Unbundled Miscellaneous Rate Element, Tag Loop at End User Premise			UEPRX	URETL		8.33	0.83					20.35	10.54	13.32	13.32
	OFF/ON PREMISES EXTENSION CHANNELS																
		2 Wire Analog Voice Grade Extension Loop – Non-Design		1	UEPRX	UEAEN	13.19	31.99	20.02	10.65	1.41			20.35	10.54	13.32	13.32
		2 Wire Analog Voice Grade Extension Loop – Non-Design		2	UEPRX	UEAEN	17.23	31.99	20.02	10.65	1.41			20.35	10.54	13.32	13.32
		2 Wire Analog Voice Grade Extension Loop – Non-Design		3	UEPRX	UEAEN	22.53	31.99	20.02	10.65	1.41			20.35	10.54	13.32	13.32
		2 Wire Analog Voice Grade Extension Loop – Design		1	UEPRX	UEAED	16.56	75.06	48.20	28.70	17.64			20.35	10.54	13.32	13.32
		2 Wire Analog Voice Grade Extension Loop – Design		2	UEPRX	UEAED	21.63	75.06	48.20	28.70	17.64			20.35	10.54	13.32	13.32
		2 Wire Analog Voice Grade Extension Loop – Design		3	UEPRX	UEAED	28.28	75.06	48.20	28.70	17.64			20.35	10.54	13.32	13.32
	INTEROFFICE TRANSPORT																
		Interoffice Transport - Dedicated - 2 Wire Voice Grade - Facility Termination			UEPRX	U1TV2	18.58	55.39	17.37	27.96	3.51						
		Interoffice Transport - Dedicated - 2 Wire Voice Grade - Per Mile or Fraction Mile			UEPRX	U1TVM	0.0174	0.00	0.00								
	2-WIRE VOICE GRADE LOOP WITH 2-WIRE LINE PORT (BUS)																
	UNE Port/Loop Combination Rates																
		2-Wire VG Loop/Port Combo - Zone 1		1			14.18										
		2-Wire VG Loop/Port Combo - Zone 2		2			18.01										
		2-Wire VG Loop/Port Combo - Zone 3		3			23.02										
	UNE Loop Rates																
		2-Wire Voice Grade Loop (SL1) - Zone 1		1	UEPBX	UEPLX	12.48										
		2-Wire Voice Grade Loop (SL1) - Zone 2		2	UEPBX	UEPLX	16.31										
		2-Wire Voice Grade Loop (SL1) - Zone 3		3	UEPBX	UEPLX	21.32										

UNBUNDLED NETWORK ELEMENTS - Tennessee													Attachment: 2		Exhibit: A	
CATEGORY	RATE ELEMENTS	Interim	Zone	BCS	USOC	RATES ($)					Svc Order Submitted Elec per LSR	Svc Order Submitted Manually per LSR	Incremental Charge - Manual Svc Order vs. Electronic-1st	Incremental Charge - Manual Svc Order vs. Electronic-Add'l	Incremental Charge - Manual Svc Order vs. Electronic-Disc 1st	Incremental Charge - Manual Svc Order vs. Electronic-Disc Add'l
						Rec	Nonrecurring		Nonrecurring Disconnect				OSS Rates ($)			
							First	Add'l	First	Add'l	SOMEC	SOMAN	SOMAN	SOMAN	SOMAN	SOMAN
2-Wire Voice Grade Line Port (Bus)																
	2-Wire voice unbundled port without Caller ID - bus			UEPBX	UEPBL	1.70	22.14	15.25	8.45	3.91		15.69				
	2-Wire voice unbundled port with Caller + E484 ID - bus			UEPBX	UEPBC	1.70	22.14	15.25	8.45	3.91		15.69				
	2-Wire voice unbundled port outgoing only - bus			UEPBX	UEPBO	1.70	22.14	15.25	8.45	3.91		15.69				
	2-Wire voice Grade unbundled Tennessee extended local dialing parity port with Caller ID - bus			UEPBX	UEPAV	1.70	22.14	15.25	8.45	3.91		15.69				
	2-Wire voice unbundled incoming only port with Caller ID - Bus			UEPBX	UEPB1	1.70	22.14	15.25	8.45	3.91		15.69				
	2-Wire voice unbundled Tennessee Bus 2-Way Area Calling Port Economy Option (TACC1)			UEPBX	UEPAC	1.70	22.14	15.25	8.45	3.91		15.69				
	2-Wire voice unbundled Tennessee Bus 2-Way Area Calling Port Standard Option (TACC2)			UEPBX	UEPAD	1.70	22.14	15.25	8.45	3.91		15.69				
	2-Wire voice unbundled Tennessee Bus 2-Way Collierville and Memphis Local Calling Port (B2F)			UEPBX	UEPAE	1.70	22.14	15.25	8.45	3.91		15.69				
	2-Wire Voice Unbundled Tennessee Business Dialing Plan without Caller ID			UEPBX	UEPWO	1.70	22.14	15.25	8.45	3.91		15.69				
	Tennessee Inward Collierville and Memphis Local Calling Plan (BUS)			UEPBX	UEPB2	1.70	22.14	15.25	8.45	3.91		15.69				
	Tennessee 2-Way Collierville and Memphis Local Calling Plan (BUS)			UEPBX	UEPB3	1.70	22.14	15.25	8.45	3.91		15.69				
	2-Wire voice unbundled Incoming Only Port without Caller ID Capability			UEPBX	UEPBE	1.70	22.14	15.25	8.45	3.91		15.69				
LOCAL NUMBER PORTABILITY																
	Local Number Portability (1 per port)			UEPBX	LNPCX	0.35										
FEATURES																
	All Features Offered			UEPBX	UEPVF	0.00	0.00	0.00				15.69				
NONRECURRING CHARGES (NRCs) - CURRENTLY COMBINED																
	2-Wire Voice Grade Loop / Line Port Combination - Conversion - Switch-as-is			UEPBX	USAC2		1.03	0.29				15.69				
	2-Wire Voice Grade Loop / Line Port Combination - Conversion - Switch with change			UEPBX	USACC		1.03	0.29				15.69				
	2-Wire Voice Grade Loop / Line Port Combination - Conversion - Subsequent Database Update						0.76					15.69				
ADDITIONAL NRCs																
	2-Wire Voice Grade Loop/Line Port Combination - Subsequent Activity			UEPBX	USAS2	0.00	0.00	0.00				15.69				
	Unbundled Miscellaneous Rate Element, Tag Loop at End User Premise			UEPBX	URETL		8.33	0.83					20.35	10.54	13.32	13.32
OFF/ON PREMISES EXTENSION CHANNELS																
	2 Wire Analog Voice Grade Extension Loop – Non-Design		1	UEPBX	UEAEN	13.19	31.99	20.02	10.65	1.41			20.35	10.54	13.32	13.32
	2 Wire Analog Voice Grade Extension Loop – Non-Design		2	UEPBX	UEAEN	17.23	31.99	20.02	10.65	1.41			20.35	10.54	13.32	13.32
	2 Wire Analog Voice Grade Extension Loop – Non-Design		3	UEPBX	UEAEN	22.53	31.99	20.02	10.65	1.41			20.35	10.54	13.32	13.32
	2 Wire Analog Voice Grade Extension Loop – Design		1	UEPBX	UEAED	16.56	75.06	48.20	28.70	17.64			20.35	10.54	13.32	13.32
	2 Wire Analog Voice Grade Extension Loop – Design		2	UEPBX	UEAED	21.63	75.06	48.20	28.70	17.64			20.35	10.54	13.32	13.32
	2 Wire Analog Voice Grade Extension Loop – Design		3	UEPBX	UEAED	28.28	75.06	48.20	28.70	17.64			20.35	10.54	13.32	13.32
INTEROFFICE TRANSPORT																
	Interoffice Transport - Dedicated - 2 Wire Voice Grade - Facility Termination			UEPBX	U1TV2	18.58	55.39	17.37	27.96	3.51						
	Interoffice Transport - Dedicated - 2 Wire Voice Grade - Per Mile or Fraction Mile			UEPBX	U1TVM	0.0174	0.00	0.00								
2-WIRE VOICE GRADE LOOP WITH 2-WIRE LINE PORT (RES - PBX)																
UNE Port/Loop Combination Rates																
	2-Wire VG Loop/Port Combo - Zone 1		1			14.18										
	2-Wire VG Loop/Port Combo - Zone 2		2			18.01										
	2-Wire VG Loop/Port Combo - Zone 3		3			23.02										
	2-Wire Voice Grade Loop (SL 1) - Zone 1		1	UEPRG	UEPLX	12.48										
	2-Wire Voice Grade Loop (SL 1) - Zone 2		2	UEPRG	UEPLX	16.31										
	2-Wire Voice Grade Loop (SL 1) - Zone 3		3	UEPRG	UEPLX	21.32										
2-Wire Voice Grade Line Port Rates (RES - PBX)																

UNBUNDLED NETWORK ELEMENTS - Tennessee														Attachment: 2		Exhibit: A	
CATEGORY	RATE ELEMENTS	Interim	Zone	BCS	USOC	RATES ($)					Svc Order Submitted Elec per LSR	Svc Order Submitted Manually per LSR	Incremental Charge - Manual Svc Order vs. Electronic-1st	Incremental Charge - Manual Svc Order vs. Electronic-Add'l	Incremental Charge - Manual Svc Order vs. Electronic-Disc 1st	Incremental Charge - Manual Svc Order vs. Electronic-Disc Add'l
						Rec	Nonrecurring		Nonrecurring Disconnect				OSS Rates ($)			
							First	Add'l	First	Add'l	SOMEC	SOMAN	SOMAN	SOMAN	SOMAN	SOMAN
	2-Wire VG Unbundled Combination 2-Way PBX Trunk Port - Res			UEPRG	UEPRD	1.70	22.14	15.25	8.45	3.91		15.69				
LOCAL NUMBER PORTABILITY																
	Local Number Portability (1 per port)			UEPRG	LNPCP	3.15	0.00	0.00				15.69				
FEATURES																
	All Features Offered			UEPRG	UEPVF	0.00	0.00	0.00				15.69				
NONRECURRING CHARGES (NRCs) - CURRENTLY COMBINED																
	2-Wire Voice Grade Loop/ Line Port Combination (PBX) - Conversion - Switch-As-Is			UEPRG	USAC2		1.03	0.29				15.69				
	2-Wire Voice Grade Loop/ Line Port Combination (PBX) - Conversion - Switch with Change			UEPRG	USACC		1.03	0.29				15.69				
	2-Wire Voice Grade Loop / Line Port Combination - Conversion - Subsequent Database Update						0.76					15.69				
ADDITIONAL NRCs																
	2-Wire Voice Grade Loop/ Line Port Combination (PBX) - Subsequent Activity			UEPRG	USAS2	0.00	0.00	0.00				15.69				
	PBX Subsequent Activity - Change/Rearrange Multiline Hunt Group						14.64	14.64				15.69				
	Unbundled Miscellaneous Rate Element, Tag Loop at End User Premise			UEPRG	URETL		8.33	0.83					20.35	10.54	13.32	13.32
OFF/ON PREMISES EXTENSION CHANNELS																
	Local Channel Voice grade, per termination		1	UEPRG	P2JHX	16.56	75.06	48.20	28.70	17.64			20.35	10.54	13.32	13.32
	Local Channel Voice grade, per termination		2	UEPRG	P2JHX	21.63	75.06	48.20	28.70	17.64			20.35	10.54	13.32	13.32
	Local Channel Voice grade, per termination		3	UEPRG	P2JHX	28.28	75.06	48.20	28.70	17.64			20.35	10.54	13.32	13.32
	Non-Wire Direct Serve Channel Voice Grade		SW	UEPRG	SDD2X	10.02	148.84	112.34	73.14	36.65			20.35	10.54	13.32	13.32
INTEROFFICE TRANSPORT																
	Interoffice Transport - Dedicated - 2 Wire Voice Grade - Facility Termination			UEPRG	U1TV2	18.58	55.39	17.37	27.96	3.51						
	Interoffice Transport - Dedicated - 2 Wire Voice Grade - Per Mile or Fraction Mile			UEPRG	U1TVM	0.0174	0.00	0.00								
2-WIRE VOICE GRADE LOOP WITH 2-WIRE LINE PORT (BUS - PBX)																
UNE Port/Loop Combination Rates																
	2-Wire VG Loop/Port Combo - Zone 1		1			14.18										
	2-Wire VG Loop/Port Combo - Zone 2		2			18.01										
	2-Wire VG Loop/Port Combo - Zone 3		3			23.02										
UNE Loop Rates																
	2-Wire Voice Grade Loop (SL 1) - Zone 1		1	UEPPX	UEPLX	12.48										
	2-Wire Voice Grade Loop (SL 1) - Zone 2		2	UEPPX	UEPLX	16.31										
	2-Wire Voice Grade Loop (SL 1) - Zone 3		3	UEPPX	UEPLX	21.32										
2-Wire Voice Grade Line Port Rates (BUS - PBX)																
	Line Side Unbundled Combination 2-Way PBX Trunk Port - Bus			UEPPX	UEPPC	1.70	22.14	15.25	8.45	3.91		15.69				
	Line Side Unbundled Outward PBX Trunk Port - Bus			UEPPX	UEPPO	1.70	22.14	15.25	8.45	3.91		15.69				
	Line Side Unbundled Incoming PBX Trunk Port - Bus			UEPPX	UEPP1	1.70	22.14	15.25	8.45	3.91		15.69				
	2-Wire Voice Unbundled PBX LD Terminal Ports			UEPPX	UEPLD	1.70	22.14	15.25	8.45	3.91		15.69				
	2-Wire Voice Unbundled 2-Way Combination PBX Tennessee Calling Port			UEPPX	UEPT2	1.70	22.14	15.25	8.45	3.91		15.69				
	2-Wire Voice Unbundled 1-Way Outgoing PBX Tennessee Calling Port			UEPPX	UEPTO	1.70	22.14	15.25	8.45	3.91		15.69				
	2-Wire Voice Unbundled 2-Way Combination PBX Usage Port			UEPPX	UEPXA	1.70	22.14	15.25	8.45	3.91		15.69				
	2-Wire Voice Unbundled PBX Toll Terminal Hotel Ports			UEPPX	UEPXB	1.70	22.14	15.25	8.45	3.91		15.69				
	2-Wire Voice Unbundled PBX LD DDD Terminals Port			UEPPX	UEPXC	1.70	22.14	15.25	8.45	3.91		15.69				
	2-Wire Voice Unbundled PBX LD Terminal Switchboard Port			UEPPX	UEPXD	1.70	22.14	15.25	8.45	3.91		15.69				
	2-Wire Voice Unbundled PBX LD Terminal Switchboard IDD Capable Port			UEPPX	UEPXE	1.70	22.14	15.25	8.45	3.91		15.69				
	2-Wire Voice Unbundled 2-Way PBX Hotel/Hospital Economy Administrative Calling Port			UEPPX	UEPXL	1.70	22.14	15.25	8.45	3.91		15.69				
	2-Wire Voice Unbundled 2-Way PBX Hotel/Hospital Economy Room Calling Port			UEPPX	UEPXM	1.70	22.14	15.25	8.45	3.91		15.69				

UNBUNDLED NETWORK ELEMENTS - Tennessee														Attachment: 2		Exhibit: A	
CATEGORY		RATE ELEMENTS	Interim	Zone	BCS	USOC	RATES ($)					Svc Order Submitted Elec per LSR	Svc Order Submitted Manually per LSR	Incremental Charge - Manual Svc Order vs. Electronic-1st	Incremental Charge - Manual Svc Order vs. Electronic-Add'l	Incremental Charge - Manual Svc Order vs. Electronic-Disc 1st	Incremental Charge - Manual Svc Order vs. Electronic-Disc Add'l
							Rec	Nonrecurring		Nonrecurring Disconnect				OSS Rates ($)			
								First	Add'l	First	Add'l	SOMEC	SOMAN	SOMAN	SOMAN	SOMAN	SOMAN
		2-Wire Voice Unbundled 1W Out PBX Hotel/Hospital Economy Administrative Calling Port TN Calling Port			UEPPX	UEPXN	1.70	22.14	15.25	8.45	3.91		15.69				
		2-Wire Voice Unbundled 1-Way Outgoing PBX Hotel/Hospital Discount Room Calling Port			UEPPX	UEPXO	1.70	22.14	15.25	8.45	3.91		15.69				
		2-Wire Voice Unbundled 1-Way Outgoing PBX Measured Port			UEPPX	UEPXS	1.70	22.14	15.25	8.45	3.91		15.69				
		2-Wire Voice Unbundled PBX Collierville and Memphis Calling Port			UEPPX	UEPXU	1.70	22.14	15.25	8.45	3.91		15.69				
		2-Wire Voice Unbundled 2-Way PBX Tennessee RegionServ Callling Port			UEPPX	UEPXV	1.70	22.14	15.25	8.45	3.91		15.69				
		Tennessee PBX 2-Way Combo Each Additional Trunk Collierville and Memphis Local Calling Plan			UEPPX	UEPA6	1.70	22.14	15.25	8.45	3.91		15.69				
		Tennessee PBX 2-Way Combo First Trunk Collierville and Memphis Local Calling Plan			UEPPX	UEPA7	1.70	22.14	15.25	8.45	3.91		15.69				
	LOCAL NUMBER PORTABILITY																
		Local Number Portability (1 per port)			UEPPX	LNPCP	3.15	0.00	0.00				15.69				
	FEATURES																
		All Features Offered			UEPPX	UEPVF	0.00	0.00	0.00				15.69				
	NONRECURRING CHARGES (NRCs) - CURRENTLY COMBINED																
		2-Wire Voice Grade Loop/ Line Port Combination (PBX) - Conversion - Switch-As-Is			UEPPX	USAC2		1.03	0.29				15.69				
		2-Wire Voice Grade Loop/ Line Port Combination (PBX) - Conversion - Switch with Change			UEPPX	USACC		1.03	0.29				15.69				
		2-Wire Voice Grade Loop / Line Port Combination - Conversion - Subsequent Database Update						0.76					15.69				
	ADDITIONAL NRCs																
		2-Wire Voice Grade Loop/ Line Port Combination (PBX) - Subsequent Activity			UEPPX	USAS2	0.00	0.00	0.00				15.69				
		PBX Subsequent Activity - Change/Rearrange Multiline Hunt Group						14.64	14.64				15.69				
		Unbundled Miscellaneous Rate Element, Tag Loop at End User Premise			UEPPX	URETL		8.33	0.83					20.35	10.54	13.32	13.32
	OFF/ON PREMISES EXTENSION CHANNELS																
		Local Channel Voice grade, per termination		1	UEPPX	P2JHX	16.56	75.06	48.20	28.70	17.64			20.35	10.54	13.32	13.32
		Local Channel Voice grade, per termination		2	UEPPX	P2JHX	21.63	75.06	48.20	28.70	17.64			20.35	10.54	13.32	13.32
		Local Channel Voice grade, per termination		3	UEPPX	P2JHX	28.28	75.06	48.20	28.70	17.64			20.35	10.54	13.32	13.32
		Non-Wire Direct Serve Channel Voice Grade		SW	UEPPX	SDD2X	10.02	148.84	112.34	73.14	36.65			20.35	10.54	13.32	13.32
	INTEROFFICE TRANSPORT																
		Interoffice Transport - Dedicated - 2 Wire Voice Grade - Facility Termination			UEPPX	U1TV2	18.58	55.39	17.37	27.96	3.51						
		Interoffice Transport - Dedicated - 2 Wire Voice Grade - Per Mile or Fraction Mile			UEPPX	U1TVM	0.0174	0.00	0.00								
	UNE Port/Loop Combination Rates																
		2-Wire VG Coin Port/Loop Combo – Zone 1		1			14.18										
		2-Wire VG Coin Port/Loop Combo – Zone 2		2			18.01										
		2-Wire VG Coin Port/Loop Combo – Zone 3		3			23.02										
	UNE Loop Rates																
		2-Wire Voice Grade Loop (SL1) - Zone 1		1	UEPCO	UEPLX	12.48										
		2-Wire Voice Grade Loop (SL1) - Zone 2		2	UEPCO	UEPLX	16.31										
		2-Wire Voice Grade Loop (SL1) - Zone 3		3	UEPCO	UEPLX	21.32										
	2-Wire Voice Grade Line Ports (COIN)																
		2-Wire Coin 2-Way without Operator Screening and without Blocking (TN)			UEPCO	UEPTB	1.70	22.14	15.25	8.45	3.91		15.69				
		2-Wire Coin 2-Way with Operator Screening and Blocking: 011, 900/976, 1+DDD (NC, TN)			UEPCO	UEPRP	1.70	22.14	15.25	8.45	3.91		15.69				
		2-Wire Coin 2-Way with Operator Screening and 011 Blocking (TN)			UEPCO	UEPTA	1.70	22.14	15.25	8.45	3.91		15.69				
		2-Wire Coin 2-Way with Operator Screening: 900 Blocking: 900/976, 1+DDD, 011+, and Local (NC, TN)			UEPCO	UEPCA	1.70	22.14	15.25	8.45	3.91		15.69				

UNBUNDLED NETWORK ELEMENTS - Tennessee													Attachment: 2		Exhibit: A	
CATEGORY	RATE ELEMENTS	Interim	Zone	BCS	USOC	RATES ($)					Svc Order Submitted Elec per LSR	Svc Order Submitted Manually per LSR	Incremental Charge - Manual Svc Order vs. Electronic-1st	Incremental Charge - Manual Svc Order vs. Electronic-Add'l	Incremental Charge - Manual Svc Order vs. Electronic-Disc 1st	Incremental Charge - Manual Svc Order vs. Electronic-Disc Add'l
						Rec	Nonrecurring		Nonrecurring Disconnect				OSS Rates ($)			
							First	Add'l	First	Add'l	SOMEC	SOMAN	SOMAN	SOMAN	SOMAN	SOMAN
	2-Wire Coin Outward with Operator Screening and 011 Blocking (TN)			UEPCO	UEPTC	1.70	22.14	15.25	8.45	3.91		15.69				
	2-Wire Coin Outward with Operator Screening and Blocking: 900/976, 1+DDD, 011+, and Local (TN)			UEPCO	UEPOT	1.70	22.14	15.25	8.45	3.91		15.69				
	2-Wire 2-Way Smartline with 900/976 (all states except LA)			UEPCO	UEPCK	1.88						15.69				
	2-Wire Coin Outward Smartline with 900/976 (all states except LA)			UEPCO	UEPCR	1.88						15.69				
ADDITIONAL UNE COIN PORT/LOOP (RC)																
	UNE Coin Port/Loop Combo Usage (Flat Rate)			UEPCO	URECU	3.45	0.00	0.00	0.00	0.00		15.69				
	Local Number Portability (1 per port)			UEPCO	LNPCX	0.35										
	2-Wire Voice Grade Loop / Line Port Combination - Conversion - Switch-as-is			UEPCO	USAC2		1.03	0.29				15.69				
	2-Wire Voice Grade Loop / Line Port Combination - Conversion - Switch with change			UEPCO	USACC		1.03	0.29				15.69				
	2-Wire Voice Grade Loop/Line Port Combination - Subsequent Activity			UEPCO	USAS2	0.00	0.00	0.00				15.69				
	Unbundled Miscellaneous Rate Element, Tag Loop at End User Premise			UEPCO	URETL		8.33	0.83					20.35	10.54	13.32	13.32
2-WIRE VOICE LOOP/ 2WIRE VOICE GRADE IO TRANSPORT/ 2-WIRE LINE PORT (RES)																
UNE Port/Loop Combination Rates																
	2-Wire VG Loop/IO Tranport/Port Combo - Zone 1		1			18.45										
	2-Wire VG Loop/IO Tranport/Port Combo - Zone 2		2			23.52										
	2-Wire VG Loop/IO Tranport/Port Combo - Zone 3		3			30.17										
UNE Loop Rates																
	2-Wire Voice Grade Loop (SL2) - Zone 1		1	UEPFR	UECF2	16.56										
	2-Wire Voice Grade Loop (SL2) - Zone 2		2	UEPFR	UECF2	21.63										
	2-Wire Voice Grade Loop (SL2) - Zone 3		3	UEPFR	UECF2	28.28										
2-Wire Voice Grade Line Port Rates (Res)																
	2-Wire voice unbundled port - residence			UEPFR	UEPRL	1.89	84.99	57.39	32.36	20.56		15.69				
	2-Wire voice unbundled port with Caller ID - res			UEPFR	UEPRC	1.89	84.99	57.39	32.36	20.56		15.69				
	2-Wire voice unbundled port outgoing only - res			UEPFR	UEPRO	1.89	84.99	57.39	32.36	20.56		15.69				
	2-Wire voice Grade unbundled Tennessee extended local dialing parity port with Caller ID - res			UEPFR	UEPAQ	1.89	84.99	57.39	32.36	20.56		15.69				
	2-Wire voice unbundled Tennessee Area Plus with Caller ID - res (AC7)			UEPFR	UEPAH	1.89	84.99	57.39	32.36	20.56		15.69				
	2-Wire voice unbundled Tennessee Area Calling port with Caller ID - res (F2R)			UEPFR	UEPAK	1.89	84.99	57.39	32.36	20.56		15.69				
	2-Wire voice unbundled Tennessee Area Calling port with Caller ID - res (TACER)			UEPFR	UEPAL	1.89	84.99	57.39	32.36	20.56		15.69				
	2-Wire voice unbundled Tennessee Area Calling port with Caller ID - res (TACSR)			UEPFR	UEPAM	1.89	84.99	57.39	32.36	20.56		15.69				
	2-Wire voice unbundled Tennessee Area Calling port with Caller ID - res (1MF2X)			UEPFR	UEPAN	1.89	84.99	57.39	32.36	20.56		15.69				
	2-Wire voice unbundled Tennessee Area Calling port with Caller ID - res (2MR)			UEPFR	UEPAO	1.89	84.99	57.39	32.36	20.56		15.69				
	2-Wire voice unbundles res, low usage line port with Caller ID (LUM)			UEPFR	UEPAP	1.89	84.99	57.39	32.36	20.56		15.69				
	2-Wire Voice Unbundled Tennessee Residence Dialing Plan without Caller ID			UEPFR	UEPWN	1.89	84.99	57.39	32.36	20.56		15.69				
INTEROFFICE TRANSPORT																
	Interoffice Transport - Dedicated - 2 Wire Voice Grade - Facility Termination			UEPFR	U1TV2	18.58	55.39	17.37	27.96	3.51						
	Interoffice Transport - Dedicated - 2 Wire Voice Grade - Per Mile or Fraction Mile			UEPFR	1L5XX	0.0174										
FEATURES																
	All Features Offered			UEPFR	UEPVF	0.00	0.00	0.00				15.69				
LOCAL NUMBER PORTABILITY																
	Local Number Portability (1 per port)			UEPFR	LNPCX	0.35										
NONRECURRING CHARGES (NRCs) - CURRENTLY COMBINED																

UNBUNDLED NETWORK ELEMENTS - Tennessee														Attachment: 2		Exhibit: A	
CATEGORY		RATE ELEMENTS	Interim	Zone	BCS	USOC	RATES ($)					Svc Order Submitted Elec per LSR	Svc Order Submitted Manually per LSR	Incremental Charge - Manual Svc Order vs. Electronic-1st	Incremental Charge - Manual Svc Order vs. Electronic-Add'l	Incremental Charge - Manual Svc Order vs. Electronic-Disc 1st	Incremental Charge - Manual Svc Order vs. Electronic-Disc Add'l
							Rec	Nonrecurring		Nonrecurring Disconnect		OSS Rates ($)					
								First	Add'l	First	Add'l	SOMEC	SOMAN	SOMAN	SOMAN	SOMAN	SOMAN
		2-Wire Loop / Dedicated IO Transport / 2 Wire Line Port Combination - Conversion - Switch-as-is			UEPFR	USAC2		16.94	3.72				15.69				
		2-Wire Loop / Dedicated IO Transport / 2 Wire Line Port Combination - Conversion - Switch-With-Change			UEPFR	USACC		16.94	3.72				15.69				
		Unbundled Miscellaneous Rate Element, Tag Designed Loop at End User Premise			UEPFR	URETN		11.23	1.10					20.35	10.54	13.32	13.32
	2-WIRE VOICE LOOP/ 2WIRE VOICE GRADE IO TRANSPORT/ 2-WIRE LINE PORT (BUS)																
	UNE Port/Loop Combination Rates																
		2-Wire VG Loop/IO Tranport/Port Combo - Zone 1		1			18.45										
		2-Wire VG Loop/IO Tranport/Port Combo - Zone 2		2			23.52										
		2-Wire VG Loop/IO Tranport/Port Combo - Zone 3		3			30.17										
	UNE Loop Rates																
		2-Wire Voice Grade Loop (SL2) - Zone 1		1	UEPFB	UECF2	16.56										
		2-Wire Voice Grade Loop (SL2) - Zone 2		2	UEPFB	UECF2	21.63										
		2-Wire Voice Grade Loop (SL2) - Zone 3		3	UEPFB	UECF2	28.28										
	2-Wire Voice Grade Line Port (Bus)																
		2-Wire voice unbundled port without Caller ID - bus			UEPFB	UEPBL	1.89	84.99	57.39	32.36	20.56		15.69				
		2-Wire voice unbundled port with Caller + E484 ID - bus			UEPFB	UEPBC	1.89	84.99	57.39	32.36	20.56		15.69				
		2-Wire voice unbundled port outgoing only - bus			UEPFB	UEPBO	1.89	84.99	57.39	32.36	20.56		15.69				
		2-Wire voice Grade unbundled Tennessee extended local dialing parity port with Caller ID - bus			UEPFB	UEPAV	1.89	84.99	57.39	32.36	20.56		15.69				
		2-Wire voice unbundled incoming only port with Caller ID - Bus			UEPFB	UEPB1	1.89	84.99	57.39	32.36	20.56		15.69				
		2-Wire voice unbundled Tennessee Bus 2-Way Area Calling Port Economy Option (TACC1)			UEPFB	UEPAC	1.89	84.99	57.39	32.36	20.56		15.69				
		2-Wire voice unbundled Tennessee Bus 2-Way Area Calling Port Standard Option (TACC2)			UEPFB	UEPAD	1.89	84.99	57.39	32.36	20.56		15.69				
		2-Wire voice unbundled Tennessee Bus 2-Way Collierville and Memphis Local Calling Port (B2F)			UEPFB	UEPAE	1.89	84.99	57.39	32.36	20.56		15.69				
		2-Wire Voice Unbundled Tennessee Business Dialing Plan without Caller ID			UEPFB	UEPWO	1.89	84.99	57.39	32.36	20.56		15.69				
		Tennessee Inward Collierville and Memphis Local Calling Plan (BUS)			UEPFB	UEPB2	1.89	84.99	57.39	32.36	20.56		15.69				
		Tennessee 2-Way Collierville and Memphis Local Calling Plan (BUS)			UEPFB	UEPB3	1.89	84.99	57.39	32.36	20.56		15.69				
	LOCAL NUMBER PORTABILITY																
		Local Number Portability (1 per port)			UEPFB	LNPCX	0.35										
	INTEROFFICE TRANSPORT																
		Interoffice Transport - Dedicated - 2 Wire Voice Grade - Facility Termination			UEPFB	U1TV2	18.58	55.39	17.37	27.96	3.51						
		Interoffice Transport - Dedicated - 2 Wire Voice Grade - Per Mile or Fraction Mile			UEPFB	1L5XX	0.0174										
	FEATURES																
		All Features Offered			UEPFB	UEPVF	0.00	0.00	0.00				15.69				
	NONRECURRING CHARGES (NRCs) - CURRENTLY COMBINED																
		2-Wire Loop / Dedicated IO Transport / 2 Wire Line Port Combination - Conversion - Switch-as-is			UEPFB	USAC2		16.94	3.72				15.69				
		2-Wire Loop / Dedicated IO Transport / 2 Wire Line Port Combination - Conversion - Switch with change			UEPFB	USACC		16.94	3.72				15.69				
		Unbundled Miscellaneous Rate Element, Tag Designed Loop at End User Premise			UEPFB	URETN		11.23	1.10					20.35	10.54	13.32	13.32
	2-WIRE VOICE LOOP/ 2WIRE VOICE GRADE IO TRANSPORT/ 2-WIRE LINE PORT (PBX)																
	UNE Port/Loop Combination Rates																
		2-Wire VG Loop/IO Tranport/Port Combo - Zone 1		1			18.45										
		2-Wire VG Loop/IO Tranport/Port Combo - Zone 2		2			23.52										
		2-Wire VG Loop/IO Tranport/Port Combo - Zone 3		3			30.17										
	UNE Loop Rates																
		2-Wire Voice Grade Loop (SL2) - Zone 1		1	UEPFP	UECF2	16.56										
		2-Wire Voice Grade Loop (SL2) - Zone 2		2	UEPFP	UECF2	21.63										
		2-Wire Voice Grade Loop (SL2) - Zone 3		3	UEPFP	UECF2	28.28										

UNBUNDLED NETWORK ELEMENTS - Tennessee													Attachment: 2		Exhibit: A	
CATEGORY	RATE ELEMENTS	Interim	Zone	BCS	USOC	RATES ($)					Svc Order Submitted Elec per LSR	Svc Order Submitted Manually per LSR	Incremental Charge - Manual Svc Order vs. Electronic-1st	Incremental Charge - Manual Svc Order vs. Electronic-Add'l	Incremental Charge - Manual Svc Order vs. Electronic-Disc 1st	Incremental Charge - Manual Svc Order vs. Electronic-Disc Add'l
						Rec	Nonrecurring		Nonrecurring Disconnect				OSS Rates ($)			
							First	Add'l	First	Add'l	SOMEC	SOMAN	SOMAN	SOMAN	SOMAN	SOMAN
2-Wire Voice Grade Line Port Rates (BUS - PBX)																
	Line Side Unbundled Combination 2-Way PBX Trunk Port - Bus			UEPFP	UEPPC	1.79	106.40	63.08	42.67	18.54		15.69				
	Line Side Unbundled Outward PBX Trunk Port - Bus			UEPFP	UEPPO	1.79	106.40	63.08	42.67	18.54		15.69				
	Line Side Unbundled Incoming PBX Trunk Port - Bus			UEPFP	UEPP1	1.79	106.40	63.08	42.67	18.54		15.69				
	2-Wire Voice Unbundled PBX LD Terminal Ports			UEPFP	UEPLD	1.79	106.40	63.08	42.67	18.54		15.69				
	2-Wire Voice Unbundled 2-Way Combination PBX Tennessee Calling Port			UEPFP	UEPT2	1.79	106.40	63.08	42.67	18.54		15.69				
	2-Wire Voice Unbundled 1-Way Outgoing PBX Tennessee Calling Port			UEPFP	UEPTO	1.79	106.40	63.08	42.67	18.54		15.69				
	2-Wire Voice Unbundled 2-Way Combination PBX Usage Port			UEPFP	UEPXA	1.79	106.40	63.08	42.67	18.54		15.69				
	2-Wire Voice Unbundled PBX Toll Terminal Hotel Ports			UEPFP	UEPXB	1.79	106.40	63.08	42.67	18.54		15.69				
	2-Wire Voice Unbundled PBX LD DDD Terminals Port			UEPFP	UEPXC	1.79	106.40	63.08	42.67	18.54		15.69				
	2-Wire Voice Unbundled PBX LD Terminal Switchboard Port			UEPFP	UEPXD	1.79	106.40	63.08	42.67	18.54		15.69				
	2-Wire Voice Unbundled PBX LD Terminal Switchboard IDD Capable Port			UEPFP	UEPXE	1.79	106.40	63.08	42.67	18.54		15.69				
	2-Wire Voice Unbundled 2-Way PBX Hotel/Hospital Economy Administrative Calling Port			UEPFP	UEPXL	1.79	106.40	63.08	42.67	18.54		15.69				
	2-Wire Voice Unbundled 2-Way PBX Hotel/Hospital Economy Room Calling Port			UEPFP	UEPXM	1.79	106.40	63.08	42.67	18.54		15.69				
	2-Wire Voice Unbundled 1W Out PBX Hotel/Hospital Economy Administrative Calling Port TN Calling Port			UEPFP	UEPXN	1.79	106.40	63.08	42.67	18.54		15.69				
	2-Wire Voice Unbundled 1-Way Outgoing PBX Hotel/Hospital Discount Room Calling Port			UEPFP	UEPXO	1.79	106.40	63.08	42.67	18.54		15.69				
	2-Wire Voice Unbundled 1-Way Outgoing PBX Measured Port			UEPFP	UEPXS	1.79	106.40	63.08	42.67	18.54		15.69				
	2-Wire Voice Unbundled PBX Collierville and Memphis Calling Port			UEPFP	UEPXU	1.79	106.40	63.08	42.67	18.54		15.69				
	2-Wire Voice Unbundled 2-Way PBX Tennessee RegionServ Callling Port			UEPFP	UEPXV	1.79	106.40	63.08	42.67	18.54		15.69				
LOCAL NUMBER PORTABILITY																
	Local Number Portability (1 per port)			UEPFP	LNPCP	3.15	0.00	0.00				15.69				
INTEROFFICE TRANSPORT																
	Interoffice Transport - Dedicated - 2 Wire Voice Grade - Facility Termination			UEPFP	U1TV2	18.58	55.39	17.37	27.96	3.51						
	Interoffice Transport - Dedicated - 2 Wire Voice Grade - Per Mile or Fraction Mile			UEPFP	1L5XX	0.0174										
FEATURES																
	All Features Offered			UEPFP	UEPVF	0.00	0.00	0.00				15.69				
NONRECURRING CHARGES (NRCs) - CURRENTLY COMBINED																
	2-Wire Loop / Dedicated IO Transport / 2 Wire Line Port Combination - Conversion - Switch-as-is			UEPFP	USAC2		16.94	3.72				15.69				
	2-Wire Loop / Dedicated IO Transport / 2 Wire Line Port Combination - Conversion - Switch with change			UEPFP	USACC		16.94	3.72				15.69				
	Unbundled Miscellaneous Rate Element, Tag Designed Loop at End User Premise			UEPFP	URETN		11.23	1.10					20.35	10.54	13.32	13.32
UNBUNDLED PORT/LOOP COMBINATIONS - COST BASED RATES																
2-WIRE VOICE GRADE LOOP- BUS ONLY - WITH 2-WIRE DID TRUNK PORT																
UNE Port/Loop Combination Rates																
	2-Wire VG Loop/2-Wire DID Trunk Port Combo - UNE Zone 1		1			18.38										
	2-Wire VG Loop/2-Wire DID Trunk Port Combo - UNE Zone 2		2			19.87										
	2-Wire VG Loop/2-Wire DID Trunk Port Combo - UNE Zone 3		3			24.78										
UNE Loop Rates																
	2-Wire Analog Voice Grade Loop - (SL2) - UNE Zone 1		1	UEPPX	UECD1	9.60										
	2-Wire Analog Voice Grade Loop - (SL2) - UNE Zone 2		2	UEPPX	UECD1	11.09										
	2-Wire Analog Voice Grade Loop - (SL2) - UNE Zone 3		3	UEPPX	UECD1	16.00										
UNE Port Rate																
	Exchange Ports - 2-Wire DID Port			UEPPX	UEPD1	8.78	45.44	29.94	8.45	3.91			30.89	7.03		
NONRECURRING CHARGES - CURRENTLY COMBINED																

CATEGORY	RATE ELEMENTS	Interim	Zone	BCS	USOC	RATES ($) Rec	Nonrecurring First	Nonrecurring Add'l	Nonrecurring Disconnect First	Nonrecurring Disconnect Add'l	Svc Order Submitted Elec per LSR	Svc Order Submitted Manually per LSR	Attachment: 2 Incremental Charge - Manual Svc Order vs. Electronic-1st	Attachment: 2 Incremental Charge - Manual Svc Order vs. Electronic-Add'l	Exhibit: A Incremental Charge - Manual Svc Order vs. Electronic-Disc 1st	Exhibit: A Incremental Charge - Manual Svc Order vs. Electronic-Disc Add'l
											OSS Rates ($)					
											SOMEC	SOMAN	SOMAN	SOMAN	SOMAN	SOMAN
	2-Wire Voice Grade Loop / 2-Wire DID Trunk Port Combination - Switch-as-is			UEPPX	USAC1		8.76	5.75					30.89	7.03		
	2-Wire Voice Grade Loop / 2-Wire DID Trunk Port Conversion with BellSouth Allowable Changes			UEPPX	USA1C		8.76	5.75					30.89	7.03		
	Unbundled Miscellaneous Rate Element, Tag Designed Loop at End User Premise			UEPPX	URETN		11.23	1.10								
Telephone Number/Trunk Group Establisment Charges																
	DID Trunk Termination (One Per Port)			UEPPX	NDT	0.00	0.00	0.00								
	Additional DID Numbers for each Group of 20 DID Numbers			UEPPX	ND4	0.00	0.00	0.00								
	DID Numbers, Non- consecutive DID Numbers , Per Number			UEPPX	ND5	0.00	0.00	0.00								
	Reserve Non-Consecutive DID numbers			UEPPX	ND6	0.00	0.00	0.00								
	Reserve DID Numbers			UEPPX	NDV	0.00	0.00	0.00								
LOCAL NUMBER PORTABILITY																
	Local Number Portability (1 per port)			UEPPX	LNPCP	3.15	0.00	0.00								
2-WIRE ISDN DIGITAL GRADE LOOP WITH 2-WIRE ISDN DIGITAL LINE SIDE PORT																
UNE Port/Loop Combination Rates																
	2W ISDN Digital Grade Loop/2W ISDN Digital Line Side Port - UNE Zone 1		1	UEPPB UEPPR		32.27										
	2W ISDN Digital Grade Loop/2W ISDN Digital Line Side Port - UNE Zone 2		2	UEPPB UEPPR		34.78										
	2W ISDN Digital Grade Loop/2W ISDN Digital Line Side Port - UNE Zone 3		3	UEPPB UEPPR		44.32										
UNE Loop Rates																
	2-Wire ISDN Digital Grade Loop - UNE Zone 1		1	UEPPB UEPPR	USL2X	16.20										
	2-Wire ISDN Digital Grade Loop - UNE Zone 2		2	UEPPB UEPPR	USL2X	18.71										
	2-Wire ISDN Digital Grade Loop - UNE Zone 3		3	UEPPB UEPPR	USL2X	28.25										
UNE Port Rate																
	Exchange Port - 2-Wire ISDN Line Side Port			UEPPB UEPPR	UEPPB	16.07	141.75	118.37	49.20	43.26			19.99	19.99		
NONRECURRING CHARGES - CURRENTLY COMBINED																
	2-Wire ISDN Digital Grade Loop / 2-Wire ISDN Line Side Port Combination - Conversion			UEPPB UEPPR	USACB	0.00	117.23	117.23					19.99	19.99		
ADDITIONAL NRCs																
	2-Wire ISDN Loop / 2-Wire ISDN Port Combination - Sub Actvy - Non Feature/Add Trunk			UEPPB UEPPR	USASB		212.88						19.99	19.99		
	Unbundled Miscellaneous Rate Element, Tag Designed Loop at End User Premise			UEPPB UEPPR	URETN		11.23	1.10								
	Unbundled Miscellaneous Rate Element, Tag Loop at End User Premise			UEPPB UEPPR	URETL		8.33	0.83								
LOCAL NUMBER PORTABILITY																
	Local Number Portability (1 per port)			UEPPB UEPPR	LNPCX	0.35	0.00	0.00								
B-CHANNEL USER PROFILE ACCESS:																
	CVS/CSD (DMS/5ESS)			UEPPB UEPPR	U1UCA	0.00	0.00	0.00								
	CVS (EWSD)			UEPPB UEPPR	U1UCB	0.00	0.00	0.00								
	CSD			UEPPB UEPPR	U1UCC	0.00	0.00	0.00								
B-CHANNEL AREA PLUS USER PROFILE ACCESS: (AL,KY,LA,MS SC,MS, & TN)																
	CVS/CSD (DMS/5ESS)			UEPPB UEPPR	U1UCD	0.00	0.00	0.00								
	CVS (EWSD)			UEPPB UEPPR	U1UCE	0.00	0.00	0.00								
	CSD			UEPPB UEPPR	U1UCF	0.00	0.00	0.00								
USER TERMINAL PROFILE																
	User Terminal Profile (EWSD only)			UEPPB UEPPR	U1UMA	0.00	0.00	0.00								
VERTICAL FEATURES																
	All Vertical Features - One per Channel B User Profile			UEPPB UEPPR	UEPVF	0.00	0.00	0.00								
INTEROFFICE CHANNEL MILEAGE																
	Interoffice Channel mileage each, including first mile and facilities termination			UEPPB UEPPR	M1GNC	17.91	53.99	17.37					19.99	19.99		
	Interoffice Channel mileage each, additional mile			UEPPB UEPPR	M1GNM	0.173	0.00	0.00								
4-WIRE DS1 DIGITAL LOOP WITH 4-WIRE ISDN DS1 DIGITAL TRUNK PORT																
The UNE-P DS1 combination rates below for in this rate exhibit apply to the embedded base in place as of 10/2/03 until 4/1/04. After 4/1/04 these rates shall revert to tariff rates or a separate commercial agreement.																

UNBUNDLED NETWORK ELEMENTS - Tennessee													Attachment: 2		Exhibit: A	
CATEGORY	RATE ELEMENTS	Interim	Zone	BCS	USOC	RATES ($)					Svc Order Submitted Elec per LSR	Svc Order Submitted Manually per LSR	Incremental Charge - Manual Svc Order vs. Electronic-1st	Incremental Charge - Manual Svc Order vs. Electronic-Add'l	Incremental Charge - Manual Svc Order vs. Electronic-Disc 1st	Incremental Charge - Manual Svc Order vs. Electronic-Disc Add'l
						Rec	Nonrecurring		Nonrecurring Disconnect		OSS Rates ($)					
							First	Add'l	First	Add'l	SOMEC	SOMAN	SOMAN	SOMAN	SOMAN	SOMAN
	Requests for 4-Wire DS1 Digital Loop with 4-Wire ISDN DS1 Digital Trunk Port after the effective date of this amendment shall be provided pursuant to a separate agreement or tariff at BellSouth's discretion.															
	UNE Port/Loop Combination Rates															
	4W DS1 Digital Loop/4W ISDN DS1 Digital Trunk Port - UNE Zone 1		1	UEPPP		132.58										
	4W DS1 Digital Loop/4W ISDN DS1 Digital Trunk Port - UNE Zone 2		2	UEPPP		150.25										
	4W DS1 Digital Loop/4W ISDN DS1 Digital Trunk Port - UNE Zone 3		3	UEPPP		173.44										
	UNE Loop Rates															
	4-Wire DS1 Digital Loop - UNE Zone 1		1	UEPPP	USL4P	57.73										
	4-Wire DS1 Digital Loop - UNE Zone 2		2	UEPPP	USL4P	75.40										
	4-Wire DS1 Digital Loop - UNE Zone 3		3	UEPPP	USL4P	98.59										
	UNE Port Rate															
	Exchange Ports - 4-Wire ISDN DS1 Port (E:4/1/2004)			UEPPP	UEPPP	74.85	415.53	366.90	89.28	77.43			19.99	19.99		
	NONRECURRING CHARGES - CURRENTLY COMBINED															
	4-Wire DS1 Digital Loop / 4-Wire ISDN DS1 Digital Trunk Port Combination - Conversion -Switch-as-is (E:4/1/2004)			UEPPP	USACP	0.00	328.53	328.53					19.99	19.99		
	ADDITIONAL NRCs															
	4-Wire DS1 Loop/4-W ISDN Digtl Trk Port - Subsqt Actvy-Inward/two way Tel Nos. (except NC)			UEPPP	PR7TF		0.94						19.99	19.99		
	4-Wire DS1 Loop / 4-Wire ISDN DS1 Digital Trunk Port - Outward Tel Numbers (All States except NC)			UEPPP	PR7TO		22.36	22.36					19.99	19.99		
	4-Wire DS1 Loop / 4-Wire ISDN DS1 Digital Trk Port - Subsequent Inward Tel Numbers			UEPPP	PR7ZT		44.71	44.70					19.99	19.99		
	LOCAL NUMBER PORTABILITY															
	Local Number Portability (1 per port)			UEPPP	LNPCN	1.75										
	INTERFACE (Provsioning Only)															
	Voice/Data			UEPPP	PR71V	0.00	0.00	0.00								
	Digital Data			UEPPP	PR71D	0.00	0.00	0.00								
	Inward Data			UEPPP	PR71E	0.00	0.00	0.00								
	New or Additional "B" Channel															
	New or Additional - Voice/Data B Channel			UEPPP	PR7BV	0.00	28.39						19.99	19.99		
	New or Additional - Digital Data B Channel			UEPPP	PR7BF	0.00	29.11						19.99	19.99		
	New or Additional Inward Data B Channel			UEPPP	PR7BD	0.00	29.39						19.99	19.99		
	CALL TYPES															
	Inward			UEPPP	PR7C1	0.00	0.00	0.00								
	Outward			UEPPP	PR7CO	0.00	0.00	0.00								
	Two-way			UEPPP	PR7CC	0.00	0.00	0.00								
	Interoffice Channel Mileage															
	Fixed Each Including First Mile			UEPPP	1LN1A	76.1825	145.98	109.85	19.55				19.99	19.99		
	Each Airline-Fractional Additional Mile			UEPPP	1LN1B	0.3525										
	4-WIRE DS1 DIGITAL LOOP WITH 4-WIRE DDITS TRUNK PORT															
	The UNE-P DS1 combination rates below for in this rate exhibit apply to the embedded base in place as of 10/2/03 until 4/1/04. After 4/1/04 these rates shall revert to tariff rates or a separate commercial agreement.															
	Requests for 4-Wire DS1 Digital Loop with 4-Wire DDITS after the effective date of this amendment shall be provided pursuant to a separate agreement or tariff at BellSouth's discretion.															
	UNE Port/Loop Combination Rates															
	4W DS1 Digital Loop/4W DDITS Trunk Port - UNE Zone 1		1	UEPDC		93.28							19.99	19.99		
	4W DS1 Digital Loop/4W DDITS Trunk Port - UNE Zone 2		2	UEPDC		110.95							19.99	19.99		
	4W DS1 Digital Loop/4W DDITS Trunk Port - UNE Zone 3		3	UEPDC		134.14							19.99	19.99		
	UNE Loop Rates															
	4-Wire DS1 Digital Loop - UNE Zone 1		1	UEPDC	USLDC	57.53										
	4-Wire DS1 Digital Loop - UNE Zone 2		2	UEPDC	USLDC	75.40										
	4-Wire DS1 Digital Loop - UNE Zone 3		3	UEPDC	USLDC	98.59										
	UNE Port Rate															
	4-Wire DDITS Digital Trunk Port (E:4/1/2004)			UEPDC	UDD1T	35.55	342.80	257.87	61.41	48.49			19.99	19.99		
	NONRECURRING CHARGES - CURRENTLY COMBINED															
	4-Wire DS1 Digital Loop / 4-Wire DDITS Trunk Port Combination - Switch-as-is (E:4/1/2004)			UEPDC	USAC4		312.91	312.91					19.99	19.99		
	4-Wire DS1 Digital Loop / 4-Wire DDITS Trunk Port Combination - Conversion with DS1 Changes (E:4/1/2004)			UEPDC	USAWA		312.91	312.91					19.99	19.99		

UNBUNDLED NETWORK ELEMENTS - Tennessee													Attachment: 2		Exhibit: A	
CATEGORY	RATE ELEMENTS	Interim	Zone	BCS	USOC	RATES ($)					Svc Order Submitted Elec per LSR	Svc Order Submitted Manually per LSR	Incremental Charge - Manual Svc Order vs. Electronic-1st	Incremental Charge - Manual Svc Order vs. Electronic-Add'l	Incremental Charge - Manual Svc Order vs. Electronic-Disc 1st	Incremental Charge - Manual Svc Order vs. Electronic-Disc Add'l
						Rec	Nonrecurring		Nonrecurring Disconnect		OSS Rates ($)					
							First	Add'l	First	Add'l	SOMEC	SOMAN	SOMAN	SOMAN	SOMAN	SOMAN
	4-Wire DS1 Digital Loop / 4-Wire DDITS Trunk Port Combination - Conversion with Change - Trunk (E:4/1/2004)			UEPDC	USAWB		312.91	312.91					19.99	19.99		
ADDITIONAL NRCs																
	4-Wire DS1 Loop / 4-Wire DDITS Trunk Port - Subsequent Service Activity Per Service Order			UEPDC	USAS4		94.88	94.88								
	4-Wire DS1 Loop / 4-Wire DDITS Trunk Port - NRC - Subsequent Channel Activation/Chan - 2-Way Trunk			UEPDC	UDTTA		108.67	108.67					19.99	19.99		
	4-Wire DS1 Loop / 4-Wire DDITS Trunk Port - Subsequent Channel Activation/Chan - 1-Way Outward Trunk			UEPDC	UDTTB		108.67	108.67					19.99	19.99		
	4-Wire DS1 Loop / 4-Wire DDITS Trunk Port - Subsqnt Channel Activation/Chan Inward Trunk w/out DID			UEPDC	UDTTC		108.67	108.67					19.99	19.99		
	4-Wire DS1 Loop / 4-Wire DDITS Trunk Port - Subsqnt Chan Activation Per Chan - Inward Trunk with DID			UEPDC	UDTTD		108.67	108.67					19.99	19.99		
	4-Wire DS1 Loop / 4-Wire DDITS Trunk Port - Subsqnt Chan Activation / Chan - 2-Way DID w User Trans			UEPDC	UDTTE		108.67	108.67					19.99	19.99		
BIPOLAR 8 ZERO SUBSTITUTION																
	B8ZS -Superframe Format			UEPDC	CCOSF		0.00i	590.00s					19.99	19.99		
	B8ZS - Extended Superframe Format			UEPDC	CCOEF		0.00i	590.00s					19.99	19.99		
Alternate Mark Inversion																
	AMI -Superframe Format			UEPDC	MCOSF		0.00	0.00								
	AMI - Extended SuperFrame Format			UEPDC	MCOPO		0.00	0.00								
Telephone Number/Trunk Group Establisment Charges																
	Telephone Number for 2-Way Trunk Group			UEPDC	UDTGX	0.00							19.99	19.99		
	Telephone Number for 1-Way Outward Trunk Group			UEPDC	UDTGY	0.00							19.99	19.99		
	Telephone Number for 1-Way Inward Trunk Group Without DID			UEPDC	UDTGZ	0.00							19.99	19.99		
	DID Numbers for each Group of 20 DID Numbers			UEPDC	ND4	0.00							19.99	19.99		
	DID Numbers, Non- consecutive DID Numbers , Per Number			UEPDC	ND5	0.00							19.99	19.99		
	Reserve Non-Consecutive DID Nos.			UEPDC	ND6	0.00	0.00	0.00								
	Reserve DID Numbers			UEPDC	NDV	0.00	0.00	0.00								
Dedicated DS1 (Interoffice Channel Mileage) - FX/FCO for 4-Wire DS1 Digital Loop with 4-Wire DDITS Trunk Port																
	Interoffice Channel Mileage - Fixed rate 0-8 miles (Facilities Termination)			UEPDC	1LNO1	75.83	145.98	109.85	19.66	14.99						
	Interoffice Channel Mileage - Additional rate per mile - 0-8 miles			UEPDC	1LNOA	0.3525	0.00	0.00								
	Interoffice Channel Mileage - Fixed rate 9-25 miles (Facilities Termination)			UEPDC	1LNO2	0.00	0.00	0.00								
	Interoffice Channel Mileage - Additional rate per mile - 9-25 miles			UEPDC	1LNOB	0.3525	0.00	0.00								
	Interoffice Channel Mileage - Fixed rate 25+ miles (Facilities Termination)			UEPDC	1LNO3	0.00	0.00	0.00								
	Interoffice Channel Mileage - Additional rate per mile - 25+ miles			UEPDC	1LNOC	0.3525	0.00	0.00								
	Local Number Portability, per DS0 Activated			UEPDC	LNPCP	3.15	0.00	0.00								
	Central Office Termininating Point			UEPDC	CTG	0.00										
4-WIRE DS1 LOOP WITH CHANNELIZATION WITH PORT																
System is 1 DS1 Loop, 1 D4 Channel Bank, and up to 24 Feature Activations																
Each System can have up to 24 combinations of rates depending on type and number of ports used																
The UNE-P DS1 combination rates below for 4-Wire DS1 Loop with Channelization with Port in this rate exhibit apply to the embedded base in place as of 10/2/03 until 4/1/04. After 4/1/04 these rates shall revert to tariff rates or a separate agreement.																
Requests for 4-Wire DS1 Loop with Channelization with Port after the effective date of this amendment shall be provided pursuant to a separate agreement or tariff at BellSouth's discretion.																
UNE DS1 Loop																
	4-Wire DS1 Loop - UNE Zone 1		1	UEPMG	USLDC	57.73	0.00	0.00								
	4-Wire DS1 Loop - UNE Zone 2		2	UEPMG	USLDC	75.40	0.00	0.00								
	4-Wire DS1 Loop - UNE Zone 3		3	UEPMG	USLDC	98.59	0.00	0.00								
UNE DSO Channelization Capacities (D4 Channel Bank Configurations)																
	24 DSO Channel Capacity - 1 per DS1			UEPMG	VUM24	131.87	0.00	0.00					19.99	19.99		
	48 DSO Channel Capacity - 1 per 2 DS1s			UEPMG	VUM48	263.74	0.00	0.00					19.99	19.99		
	96 DSO Channel Capacity -1per 4 DS1s			UEPMG	VUM96	527.48	0.00	0.00					19.99	19.99		
	144 DS0 Channel Capacity - 1 per 6 DS1s			UEPMG	VUM14	791.42	0.00	0.00					19.99	19.99		
	192 DS0 Channel Capacity -1 per 8 DS1s			UEPMG	VUM19	827.76	0.00	0.00					19.99	19.99		

UNBUNDLED NETWORK ELEMENTS - Tennessee													Attachment: 2		Exhibit: A	
CATEGORY	RATE ELEMENTS	Interim	Zone	BCS	USOC	RATES ($)					Svc Order Submitted Elec per LSR	Svc Order Submitted Manually per LSR	Incremental Charge - Manual Svc Order vs. Electronic-1st	Incremental Charge - Manual Svc Order vs. Electronic-Add'l	Incremental Charge - Manual Svc Order vs. Electronic-Disc 1st	Incremental Charge - Manual Svc Order vs. Electronic-Disc Add'l
						Rec	Nonrecurring		Nonrecurring Disconnect		OSS Rates ($)					
							First	Add'l	First	Add'l	SOMEC	SOMAN	SOMAN	SOMAN	SOMAN	SOMAN
	240 DS0 Channel Capacity - 1 per 10 DS1s			UEPMG	VUM2O	1,318.70	0.00	0.00					19.99	19.99		
	288 DS0 Channel Capacity - 1 per 12 DS1s			UEPMG	VUM28	1,582.44	0.00	0.00					19.99	19.99		
	384 DS0 Channel Capacity - 1 per 16 DS1s			UEPMG	VUM38	2,109.92	0.00	0.00					19.99	19.99		
	480 DS0 Channel Capacity - 1 per 20 DS1s			UEPMG	VUM4O	2,637.40	0.00	0.00					19.99	19.99		
	576 DS0 Channel Capacity -1 per 24 DS1s			UEPMG	VUM57	3,164.88	0.00	0.00					19.99	19.99		
	672 DS0 Channel Capacity - 1 per 28 DS1s			UEPMG	VUM67	3,692.36	0.00	0.00					19.99	19.99		
	Non-Recurring Charges (NRC) Associated with 4-Wire DS1 Loop with Channeliztion with Port - Conversion Charge Based on a System															
	A Minimum System configuration is One (1) DS1, One (1) D4 Channel Bank, and Up To 24 DSO Ports with Feature Activations.															
	Multiples of this configuration functioning as one are considered Add'l after the minimum system configuration is counted.															
	NRC - Conversion (Currently Combined) with or without BellSouth Allowed Changes			UEPMG	USAC4	0.00	303.61	15.74					19.99	19.99		
	System Additions at End User Locations Where 4-Wire DS1 Loop with Channelization with Port Combination Currently Exists and															
	New (Not Currently Combined) in all states, except in Density Zone 1 of Top 8 MSA's															
	1 DS1/D4 Channel Bank - Additionally Add NRC for each Port and Assoc Fea Activation (E:4/1/2004)			UEPMG	VUMD4	0.00	704.68	441.48	138.36	16.41			19.99			
	Bipolar 8 Zero Substitution															
	Clear Channel Capability Format, superframe - Subsequent Activity Only			UEPMG	CCOSF	0.00	0.00i	590.00s								
	Clear Channel Capability Format - Extended Superframe - Subsequent Activity Only			UEPMG	CCOEF	0.00	0.00i	590.00s								
	Alternate Mark Inversion (AMI)															
	Superframe Format			UEPMG	MCOSF	0.00	0.00	0.00								
	Extended Superframe Format			UEPMG	MCOPO	0.00	0.00	0.00								
	Exchange Ports Associated with 4-Wire DS1 Loop with Channelization with Port															
	Exchange Ports															
	Line Side Combination Channelized PBX Trunk Port - Business (E:4/1/2004)			UEPPX	UEPCX	1.70	0.00	0.00	0.00	0.00			30.89	7.03		
	Line Side Outward Channelized PBX Trunk Port - Business (E:4/1/2004)			UEPPX	UEPOX	1.70	0.00	0.00	0.00	0.00			30.89	7.03		
	Line Side Inward Only Channelized PBX Trunk Port without DID (E:4/1/2004)			UEPPX	UEP1X	1.70	0.00	0.00	0.00	0.00			30.89	7.03		
	2-Wire Trunk Side Unbundled Channelized DID Trunk Port (E:4/1/2004)			UEPPX	UEPDM	8.97	0.00	0.00	0.00	0.00			30.89	7.03		
	Unbundled Exchange Ports, 2-Wire Channelized – Outdial – (AL, KY, LA, MS, & TN)(Conversion from Network Access Service) (E:4/1/2004)			UEPPX	UEPCY	1.70	0.00	0.00	0.00	0.00			30.89	7.03		
	Unbundled Exchange Ports, 2-Wire Channelized – Combination (AL, KY, LA, MS, & TN) (Conversion from Network Access Service) (E:4/1/2004)			UEPPX	UEPCT	1.70	0.00	0.00	0.00	0.00			30.89	7.03		
	Unbundled Exchange Ports, 2-Wire Channelized – Outdial – Tennessee Only – Calling Plan - Regionserv (E:4/1/2004)			UEPPX	UEPCZ	1.70	0.00	0.00	0.00	0.00			30.89	7.03		
	Unbundled Exchange Ports, 2-Wire Channelized – Two Way - Tennessee Only – Calling Plan - Regionserv (E:4/1/2004)			UEPPX	UEPC6	1.70	0.00	0.00	0.00	0.00			30.89	7.03		
	Feature Activations - Unbundled Loop Concentration															
	Feature (Service) Activation for each Line Port Terminated in D4 Bank (includes Q.1.4, P50.1, P.50.498)			UEPPX	1PQWM	2.02	23.94	12.64	3.82	3.80			30.89	7.03		
	Feature (Service) Activation for each Trunk Port Terminated in D4 Bank (includes Q.1.4, P50.1, P.50.498)			UEPPX	1PQWU	2.02	73.67	17.37	54.09	10.57			30.89	7.03		
	Telephone Number/ Group Establishment Charges for DID Service															
	DID Trunk Termination (1 per Port)			UEPPX	NDT	0.00	0.00	0.00								
	DID Numbers - groups of 20 - Valid all States			UEPPX	ND4	0.00	0.00	0.00								
	Non-Consecutive DID Numbers - per number			UEPPX	ND5	0.00	0.00	0.00								
	Reserve Non-Consecutive DID Numbers			UEPPX	ND6	0.00	0.00	0.00								
	Reserve DID Numbers			UEPPX	NDV	0.00	0.00	0.00								
	Local Number Portability															
	Local Number Portability - 1 per port			UEPPX	LNPCP	3.15	0.00	0.00								
	FEATURES - Vertical and Optional															
	Local Switching Features Offered with Line Side Ports Only															
	All Features Available			UEPPX	UEPVF	0.00	0.00	0.00								

UNBUNDLED NETWORK ELEMENTS - Tennessee													Attachment: 2		Exhibit: A	
CATEGORY	RATE ELEMENTS	Interim	Zone	BCS	USOC	RATES ($)					Svc Order Submitted Elec per LSR	Svc Order Submitted Manually per LSR	Incremental Charge - Manual Svc Order vs. Electronic-1st	Incremental Charge - Manual Svc Order vs. Electronic-Add'l	Incremental Charge - Manual Svc Order vs. Electronic-Disc 1st	Incremental Charge - Manual Svc Order vs. Electronic-Disc Add'l
						Rec	Nonrecurring		Nonrecurring Disconnect		OSS Rates ($)					
							First	Add'l	First	Add'l	SOMEC	SOMAN	SOMAN	SOMAN	SOMAN	SOMAN
UNBUNDLED CENTREX PORT/LOOP COMBINATIONS - COST BASED RATES																
1. Cost Based Rates are applied where BellSouth is required by FCC and/or State Commission rule to provide Unbundled Local Switching or Switch Ports.																
2. Features shall apply to the Unbundled Port/Loop Combination - Cost Based Rate section in the same manner as they are applied to the Stand-Alone Unbundled Port section of this Rate Exhibit.																
3. End Office and Tandem Switching Usage and Common Transport Usage rates in the Port section of this rate exhibit shall apply to all combinations of loop/port network elements except for UNE Coin Port/Loop Combinations.																
4. The first and additional Port nonrecurring charges apply to Not Currently Combined Combos. For Currently Combined Combos, the nonrecurring charges shall be those identified in the Nonrecurring - Currently Combined sections. Additional NRCs may apply also and are categorized accordingly.																
5. Market Rates for Unbundled Centrex Port/Loop Combination will be negotiated on an Individual Case Basis, until further notice.																
UNE-P CENTREX - 1AESS - (Valid in AL,FL,GA,KY,LA,MS,&TN only)																
2-Wire VG Loop/2-Wire Voice Grade Port (Centrex) Combo																
UNE Port/Loop Combination Rates (Non-Design)																
	2-Wire VG Loop/2-Wire Voice Grade Port (Centrex) Port Combo - Non-Design		1	UEP91		14.18										
	2-Wire VG Loop/2-Wire Voice Grade Port (Centrex)Port Combo - Non-Design		2	UEP91		18.01										
	2-Wire VG Loop/2-Wire Voice Grade Port (Centrex)Port Combo - Non-Design		3	UEP91		23.02										
UNE Port/Loop Combination Rates (Design)																
	2-Wire VG Loop/2-Wire Voice Grade Port (Centrex) Port Combo - Design		1	UEP91		18.26										
	2-Wire VG Loop/2-Wire Voice Grade Port (Centrex)Port Combo - Design		2	UEP91		23.33										
	2-Wire VG Loop/2-Wire Voice Grade Port (Centrex)Port Combo - Design		3	UEP91		29.98										
UNE Loop Rate																
	2-Wire Voice Grade Loop (SL 1) - Zone 1		1	UEP91	UECS1	12.48										
	2-Wire Voice Grade Loop (SL 1) - Zone 2		2	UEP91	UECS1	16.31										
	2-Wire Voice Grade Loop (SL 1) - Zone 3		3	UEP91	UECS1	21.32										
	2-Wire Voice Grade Loop (SL 2) - Zone 1		1	UEP91	UECS2	16.56										
	2-Wire Voice Grade Loop (SL 2) - Zone 2		2	UEP91	UECS2	21.63										
	2-Wire Voice Grade Loop (SL 2) - Zone 3		3	UEP91	UECS2	28.28										
UNE Ports																
All States (Except North Carolina and Sout Carolina)																
	2-Wire Voice Grade Port (Centrex) Basic Local Area			UEP91	UEPYA	1.70	22.14	15.25	8.45	3.91		30.89	7.03			
	2-Wire Voice Grade Port (Centrex 800 termination)Basic Local Area			UEP91	UEPYB	1.70	22.14	15.25	8.45	3.91		30.89	7.03			
	2-Wire Voice Grade Port (Centrex with Caller ID)Note1 Basic Local Area			UEP91	UEPYH	1.70	22.14	15.25	8.45	3.91		30.89	7.03			
	2-Wire Voice Grade Port (Centrex from diff Serving Wire Center) Note 2, 3 Basic Local Area			UEP91	UEPYM	1.70	22.14	15.25	8.45	3.91		30.89	7.03			
	2-Wire Voice Grade Port, Diff Serving Wire Center - 800 Service Term - Basic Local Area			UEP91	UEPYZ	1.70	22.14	15.25	8.45	3.91		30.89	7.03			
	2-Wire Voice Grade Port terminated in on Megalink or equivalent - Basic Local Area			UEP91	UEPY9	1.70	22.14	15.25	8.45	3.91		30.89	7.03			
	2-Wire Voice Grade Port Terminated on 800 Service Term - Basic Local Area			UEP91	UEPY2	1.70	22.14	15.25	8.45	3.91		30.89	7.03			
AL, KY, LA, MS, & TN Only																
	2-Wire Voice Grade Port (Centrex)			UEP91	UEPQA	1.70	22.14	15.25	8.45	3.91		30.89	7.03			
	2-Wire Voice Grade Port (Centrex 800 termination)			UEP91	UEPQB	1.70	22.14	15.25	8.45	3.91		30.89	7.03			
	2-Wire Voice Grade Port (Centrex with Caller ID)1			UEP91	UEPQH	1.70	22.14	15.25	8.45	3.91		30.89	7.03			
	2-Wire Voice Grade Port (Centrex from diff Serving Wire Center)2,3			UEP91	UEPQM	1.70	22.14	15.25	8.45	3.91		30.89	7.03			
	2-Wire Voice Grade Port, Diff Serving Wire Center - 2,3 - 800 Service Term			UEP91	UEPQZ	1.70	22.14	15.25	8.45	3.91		30.89	7.03			
	2-Wire Voice Grade Port terminated in on Megalink or equivalent			UEP91	UEPQ9	1.70	22.14	15.25	8.45	3.91		30.89	7.03			
	2-Wire Voice Grade Port Terminated on 800 Service Term			UEP91	UEPQ2	1.70	22.14	15.25	8.45	3.91		30.89	7.03			
Local Switching																
	Centrex Intercom Funtionality, per port			UEP91	URECS	0.6381										
Local Number Portability																

UNBUNDLED NETWORK ELEMENTS - Tennessee														Attachment: 2		Exhibit: A	
CATEGORY		RATE ELEMENTS	Interim	Zone	BCS	USOC	RATES ($)					Svc Order Submitted Elec per LSR	Svc Order Submitted Manually per LSR	Incremental Charge - Manual Svc Order vs. Electronic-1st	Incremental Charge - Manual Svc Order vs. Electronic-Add'l	Incremental Charge - Manual Svc Order vs. Electronic-Disc 1st	Incremental Charge - Manual Svc Order vs. Electronic-Disc Add'l
							Rec	Nonrecurring		Nonrecurring Disconnect		OSS Rates ($)					
								First	Add'l	First	Add'l	SOMEC	SOMAN	SOMAN	SOMAN	SOMAN	SOMAN
		Local Number Portability (1 per port)			UEP91	LNPCC	0.35										
	Features																
		All Standard Features Offered, per port			UEP91	UEPVF	0.00						30.89	7.03			
		All Select Features Offered, per port			UEP91	UEPVS	0.00	433.78					30.89	7.03			
		All Centrex Control Features Offered, per port			UEP91	UEPVC	0.00						30.89	7.03			
	NARS																
		Unbundled Network Access Register - Combination			UEP91	UARCX	0.00	0.00	0.00	0.00	0.00		0.00	7.03			
		Unbundled Network Access Register - Indial			UEP91	UAR1X	0.00	0.00	0.00	0.00	0.00		0.00	7.03			
		Unbundled Network Access Register - Outdial			UEP91	UAROX	0.00	0.00	0.00	0.00	0.00		0.00	7.03			
	Miscellaneous Terminations																
	2-Wire Trunk Side																
		Trunk Side Terminations, each			UEP91	CENA6	8.78	22.14	15.25	8.45	3.91		30.89	7.03			
	Interoffice Channel Mileage - 2-Wire																
		Interoffice Channel Facilities Termination - Voice Grade			UEP91	M1GBC	18.58	22.14	15.25	8.45	3.91		30.89	7.03			
		Interoffice Channel mileage, per mile or fraction of mile			UEP91	M1GBM	0.0174										
	Feature Activations (DS0) Centrex Loops on Channelized DS1 Service																
	D4 Channel Bank Feature Activations																
		Feature Activation on D-4 Channel Bank Centrex Loop Slot			UEP91	1PQWS	0.66										
		Feature Activation on D-4 Channel Bank FX line Side Loop Slot			UEP91	1PQW6	0.66										
		Feature Activation on D-4 Channel Bank FX Trunk Side Loop Slot			UEP91	1PQW7	0.66										
		Feature Activation on D-4 Channel Bank Centrex Loop Slot - Different Wire Center			UEP91	1PQWP	0.66										
		Feature Activation on D-4 Channel Bank Private Line Loop Slot			UEP91	1PQWV	0.66										
		Feature Activation on D-4 Channel Bank Tjie Line/Trunk Loop Slot			UEP91	1PQWQ	0.66										
		Feature Activation on D-4 Channel Bank WATS Loop Slot			UEP91	1PQWA	0.66										
	Non-Recurring Charges (NRC) Associated with UNE-P Centrex																
		Conversion - Currently Combined Switch-As-Is with allowed changes, per port			UEP91	USAC2		1.03	0.29				30.89	7.03			
		New Centrex Standard Common Block			UEP91	M1ACS	0.00	658.60					30.89	7.03			
		New Centrex Customized Common Block			UEP91	M1ACC	0.00	658.60					30.89	7.03			
		Secondary Block, per Block			UEP91	M2CC1	0.00	73.55					30.89	7.03			
		NAR Establishment Charge, Per Occasion			UEP91	URECA		68.57					30.89	7.03			
	Additional Non-Recurring Charges (NRC)																
		Unbundled Miscellaneous Rate Element, Tag Loop at End Use Premise			UEP91	URETL		8.33	0.83								
		Unbundled Miscellaneous Rate Element, Tag Design Loop at End Use Premise			UEP91	URETN		11.23	1.10								
	UNE-P CENTREX - 5ESS (Valid in All States)																
	2-Wire VG Loop/2-Wire Voice Grade Port (Centrex) Combo																
	UNE Port/Loop Combination Rates (Non-Design)																
		2-Wire VG Loop/2-Wire Voice Grade Port (Centrex) Port Combo - Non-Design		1	UEP95		14.18										
		2-Wire VG Loop/2-Wire Voice Grade Port (Centrex)Port Combo - Non-Design		2	UEP95		18.01										
		2-Wire VG Loop/2-Wire Voice Grade Port (Centrex)Port Combo - Non-Design		3	UEP95		23.02										
	UNE Port/Loop Combination Rates (Design)																
		2-Wire VG Loop/2-Wire Voice Grade Port (Centrex) Port Combo - Design		1	UEP95		18.26										
		2-Wire VG Loop/2-Wire Voice Grade Port (Centrex)Port Combo - Design		2	UEP95		23.33										
		2-Wire VG Loop/2-Wire Voice Grade Port (Centrex)Port Combo - Design		3	UEP95		29.98										
	UNE Loop Rate																
		2-Wire Voice Grade Loop (SL 1) - Zone 1		1	UEP95	UECS1	12.48										

UNBUNDLED NETWORK ELEMENTS - Tennessee														Attachment: 2		Exhibit: A	
CATEGORY		RATE ELEMENTS	Interim	Zone	BCS	USOC	RATES ($)					Svc Order Submitted Elec per LSR	Svc Order Submitted Manually per LSR	Incremental Charge - Manual Svc Order vs. Electronic-1st	Incremental Charge - Manual Svc Order vs. Electronic-Add'l	Incremental Charge - Manual Svc Order vs. Electronic-Disc 1st	Incremental Charge - Manual Svc Order vs. Electronic-Disc Add'l
							Rec	Nonrecurring		Nonrecurring Disconnect		OSS Rates ($)					
								First	Add'l	First	Add'l	SOMEC	SOMAN	SOMAN	SOMAN	SOMAN	SOMAN
		2-Wire Voice Grade Loop (SL 1) - Zone 2		2	UEP95	UECS1	16.31										
		2-Wire Voice Grade Loop (SL 1) - Zone 3		3	UEP95	UECS1	21.32										
		2-Wire Voice Grade Loop (SL 2) - Zone 1		1	UEP95	UECS2	16.56										
		2-Wire Voice Grade Loop (SL 2) - Zone 2		2	UEP95	UECS2	21.63										
		2-Wire Voice Grade Loop (SL 2) - Zone 3		3	UEP95	UECS2	28.28										
	UNE Port Rate																
	All States																
		2-Wire Voice Grade Port (Centrex) Basic Local Area			UEP95	UEPYA	1.70	22.14	15.25	8.45	3.91		30.89	7.03			
		2-Wire Voice Grade Port (Centrex 800 termination)			UEP95	UEPYB	1.70	22.14	15.25	8.45	3.91		30.89	7.03			
		2-Wire Voice Grade Port (Centrex with Caller ID)1Basic Local Area			UEP95	UEPYH	1.70	22.14	15.25	8.45	3.91		30.89	7.03			
		2-Wire Voice Grade Port (Centrex from diff Serving Wire Center)2,3 Basic Local Area			UEP95	UEPYM	1.70	22.14	15.25	8.45	3.91		30.89	7.03			
		2-Wire Voice Grade Port, Diff Serving Wire Center 2,3 - 800 Service Term - Basic Local Area			UEP95	UEPYZ	1.70	22.14	15.25	8.45	3.91		30.89	7.03			
		2-Wire Voice Grade Port terminated in on Megalink or equivalent - Basic Local Area			UEP95	UEPY9	1.70	22.14	15.25	8.45	3.91		30.89	7.03			
		2-Wire Voice Grade Port Terminated on 800 Service Term - Basic Local Area			UEP95	UEPY2	1.70	22.14	15.25	8.45	3.91		30.89	7.03			
	AL, KY, LA, MS, SC, & TN Only																
		2-Wire Voice Grade Port (Centrex)			UEP95	UEPQA	1.70	22.14	15.25	8.45	3.91		30.89	7.03			
		2-Wire Voice Grade Port (Centrex 800 termination)			UEP95	UEPQB	1.70	22.14	15.25	8.45	3.91		30.89	7.03			
		2-Wire Voice Grade Port (Centrex with Caller ID)1			UEP95	UEPQH	1.70	22.14	15.25	8.45	3.91		30.89	7.03			
		2-Wire Voice Grade Port (Centrex from diff Serving Wire Center)2,3			UEP95	UEPQM	1.70	22.14	15.25	8.45	3.91		30.89	7.03			
		2-Wire Voice Grade Port, Diff Serving Wire Center - 800 Service Term 2,3			UEP95	UEPQZ	1.70	22.14	15.25	8.45	3.91		30.89	7.03			
		2-Wire Voice Grade Port terminated in on Megalink or equivalent			UEP95	UEPQ9	1.70	22.14	15.25	8.45	3.91		30.89	7.03			
		2-Wire Voice Grade Port Terminated on 800 Service Term			UEP95	UEPQ2	1.70	22.14	15.25	8.45	3.91		30.89	7.03			
	FL & GA Only																
	Local Switching																
		Centrex Intercom Funtionality, per port			UEP95	URECS	0.6381										
	Local Number Portability																
		Local Number Portability (1 per port)			UEP95	LNPCC	0.35										
	Features																
		All Standard Features Offered, per port			UEP95	UEPVF	0.00						30.89	7.03			
		All Select Features Offered, per port			UEP95	UEPVS	0.00	433.78					30.89	7.03			
		All Centrex Control Features Offered, per port			UEP95	UEPVC	0.00						30.89	7.03			
	NARS																
		Unbundled Network Access Register - Combination			UEP95	UARCX	0.00	0.00	0.00	0.00	0.00		0.00	7.03			
		Unbundled Network Access Register - Indial			UEP95	UAR1X	0.00	0.00	0.00	0.00	0.00		0.00	7.03			
		Unbundled Network Access Register - Outdial			UEP95	UAROX	0.00	0.00	0.00	0.00	0.00		0.00	7.03			
	Miscellaneous Terminations																
	2-Wire Trunk Side																
		Trunk Side Terminations, each			UEP95	CEND6	8.78	47.75	47.01	9.21	8.47		30.89	7.03			
	4-Wire Digital (1.544 Megabits)																
		DS1 Circuit Terminations, each			UEP95	M1HD1	35.55	75.93	38.15				30.89	7.03			
		DS0 Channels Activated, each			UEP95	M1HDO	0.00	108.67					30.89	7.03			
	Interoffice Channel Mileage - 2-Wire																
		Interoffice Channel Facilities Termination			UEP95	M1GBC	18.58	22.14	15.25	8.45	3.91		30.89	7.03			
		Interoffice Channel mileage, per mile or fraction of mile			UEP95	M1GBM	0.0174										
	Feature Activations (DS0) Centrex Loops on Channelized DS1 Service																
	D4 Channel Bank Feature Activations																
		Feature Activation on D-4 Channel Bank Centrex Loop Slot			UEP95	1PQWS	0.66										
		Feature Activation on D-4 Channel Bank FX line Side Loop Slot			UEP95	1PQW6	0.66										
		Feature Activation on D-4 Channel Bank FX Trunk Side Loop Slot			UEP95	1PQW7	0.66										

UNBUNDLED NETWORK ELEMENTS - Tennessee														Attachment: 2		Exhibit: A	
CATEGORY		RATE ELEMENTS	Interim	Zone	BCS	USOC	RATES ($)					Svc Order Submitted Elec per LSR	Svc Order Submitted Manually per LSR	Incremental Charge - Manual Svc Order vs. Electronic-1st	Incremental Charge - Manual Svc Order vs. Electronic-Add'l	Incremental Charge - Manual Svc Order vs. Electronic-Disc 1st	Incremental Charge - Manual Svc Order vs. Electronic-Disc Add'l
							Rec	Nonrecurring		Nonrecurring Disconnect		OSS Rates ($)					
								First	Add'l	First	Add'l	SOMEC	SOMAN	SOMAN	SOMAN	SOMAN	SOMAN
		Feature Activation on D-4 Channel Bank Centrex Loop Slot - Different Wire Center			UEP95	1PQWP	0.66										
		Feature Activation on D-4 Channel Bank Private Line Loop Slot			UEP95	1PQWV	0.66										
		Feature Activation on D-4 Channel Bank Tjie Line/Trunk Loop Slot			UEP95	1PQWQ	0.66										
		Feature Activation on D-4 Channel Bank WATS Loop Slot			UEP95	1PQWA	0.66										
	Non-Recurring Charges (NRC) Associated with UNE-P Centrex																
		NRC Conversion Currently Combined Switch-As-Is with allowed changes, per port			UEP95	USAC2		1.03	0.29				30.89	7.03			
		New Centrex Standard Common Block			UEP95	M1ACS	0.00	658.60					30.89	7.03			
		New Centrex Customized Common Block			UEP95	M1ACC	0.00	658.60					30.89	7.03			
		NAR Establishment Charge, Per Occasion			UEP95	URECA	0.00	68.57					30.89	7.03			
	Additional Non-Recurring Charges (NRC)																
		Unbundled Miscellaneous Rate Element, Tag Loop at End Use Premise			UEP95	URETL		8.33	0.83								
		Unbundled Miscellaneous Rate Element, Tag Design Loop at End Use Premise			UEP95	URETN		11.23	1.10								
	UNE-P CENTREX - DMS100 (Valid in All States)																
	2-Wire VG Loop/2-Wire Voice Grade Port (Centrex) Combo																
	UNE Port/Loop Combination Rates (Non-Design)																
		2-Wire VG Loop/2-Wire Voice Grade Port (Centrex) Port Combo - Non-Design		1	UEP9D		14.18										
		2-Wire VG Loop/2-Wire Voice Grade Port (Centrex)Port Combo - Non-Design		2	UEP9D		18.01										
		2-Wire VG Loop/2-Wire Voice Grade Port (Centrex)Port Combo - Non-Design		3	UEP9D		23.02										
	UNE Port/Loop Combination Rates (Design)																
		2-Wire VG Loop/2-Wire Voice Grade Port (Centrex) Port Combo - Design		1	UEP9D		18.26										
		2-Wire VG Loop/2-Wire Voice Grade Port (Centrex)Port Combo - Design		2	UEP9D		23.33										
		2-Wire VG Loop/2-Wire Voice Grade Port (Centrex)Port Combo - Design		3	UEP9D		29.98										
	UNE Loop Rate																
		2-Wire Voice Grade Loop (SL 1) - Zone 1		1	UEP9D	UECS1	12.48										
		2-Wire Voice Grade Loop (SL 1) - Zone 2		2	UEP9D	UECS1	16.31										
		2-Wire Voice Grade Loop (SL 1) - Zone 3		3	UEP9D	UECS1	21.32										
		2-Wire Voice Grade Loop (SL 2) - Zone 1		1	UEP9D	UECS2	16.56										
		2-Wire Voice Grade Loop (SL 2) - Zone 2		2	UEP9D	UECS2	21.63										
		2-Wire Voice Grade Loop (SL 2) - Zone 3		3	UEP9D	UECS2	28.28										
	UNE Port Rate																
	ALL STATES																
		2-Wire Voice Grade Port (Centrex) Basic Local Area			UEP9D	UEPYA	1.70	22.14	15.25	8.45	3.91		30.89	7.03			
		2-Wire Voice Grade Port (Centrex 800 termination)Basic Local Area			UEP9D	UEPYB	1.70	22.14	15.25	8.45	3.91		30.89	7.03			
		2-Wire Voice Grade Port (Centrex / EBS-PSET)3Basic Local Area			UEP9D	UEPYC	1.70	22.14	15.25	8.45	3.91		30.89	7.03			
		2-Wire Voice Grade Port (Centrex / EBS-M5009)3Basic Local Area			UEP9D	UEPYD	1.70	22.14	15.25	8.45	3.91		30.89	7.03			
		2-Wire Voice Grade Port (Centrex / EBS-M5209))3 Basic Local Area			UEP9D	UEPYE	1.70	22.14	15.25	8.45	3.91		30.89	7.03			
		2-Wire Voice Grade Port (Centrex / EBS-M5112))3 Basic Local Area			UEP9D	UEPYF	1.70	22.14	15.25	8.45	3.91		30.89	7.03			
		2-Wire Voice Grade Port (Centrex / EBS-M5312))3Basic Local Area			UEP9D	UEPYG	1.70	22.14	15.25	8.45	3.91		30.89	7.03			
		2-Wire Voice Grade Port (Centrex / EBS-M5008))3 Basic Local Area			UEP9D	UEPYT	1.70	22.14	15.25	8.45	3.91		30.89	7.03			

CATEGORY		RATE ELEMENTS	Interim	Zone	BCS	USOC	RATES ($)					Svc Order Submitted Elec per LSR	Svc Order Submitted Manually per LSR	Attachment: 2 Incremental Charge - Manual Svc Order vs. Electronic-1st	Attachment: 2 Incremental Charge - Manual Svc Order vs. Electronic-Add'l	Exhibit: A Incremental Charge - Manual Svc Order vs. Electronic-Disc 1st	Exhibit: A Incremental Charge - Manual Svc Order vs. Electronic-Disc Add'l
							Rec	Nonrecurring		Nonrecurring Disconnect		OSS Rates ($)					
								First	Add'l	First	Add'l	SOMEC	SOMAN	SOMAN	SOMAN	SOMAN	SOMAN
		2-Wire Voice Grade Port (Centrex / EBS-M5208))3 Basic Local Area			UEP9D	UEPYU	1.70	22.14	15.25	8.45	3.91		30.89	7.03			
		2-Wire Voice Grade Port (Centrex / EBS-M5216))3 Basic Local Area			UEP9D	UEPYV	1.70	22.14	15.25	8.45	3.91		30.89	7.03			
		2-Wire Voice Grade Port (Centrex / EBS-M5316))3 Basic Local Area			UEP9D	UEPY3	1.70	22.14	15.25	8.45	3.91		30.89	7.03			
		2-Wire Voice Grade Port (Centrex with Caller ID) Basic Local Area			UEP9D	UEPYH	1.70	22.14	15.25	8.45	3.91		30.89	7.03			
		2-Wire Voice Grade Port (Centrex/Caller ID/Msg Wtg Lamp Indication))4 Basic Local Area			UEP9D	UEPYW	1.70	22.14	15.25	8.45	3.91		30.89	7.03			
		2-Wire Voice Grade Port (Centrex/Msg Wtg Lamp Indication))4 Basic Local Area			UEP9D	UEPYJ	1.70	22.14	15.25	8.45	3.91		30.89	7.03			
		2-Wire Voice Grade Port (Centrex from diff Serving Wire Center) 2,3-Basic Local Area			UEP9D	UEPYM	1.70	22.14	15.25	8.45	3.91		30.89	7.03			
		2-Wire Voice Grade Port (Centrex/differ SWC /EBS-PSET)2,3,4 Basic Local Area			UEP9D	UEPYO	1.70	22.14	15.25	8.45	3.91		30.89	7.03			
		2-Wire Voice Grade Port (Centrex/differ SWC /EBS-M5009)2,3,4 Basic Local Area			UEP9D	UEPYP	1.70	22.14	15.25	8.45	3.91		30.89	7.03			
		2-Wire Voice Grade Port (Centrex/differ SWC /EBS-5209)2,3,4 Basic Local Area			UEP9D	UEPYQ	1.70	22.14	15.25	8.45	3.91		30.89	7.03			
		2-Wire Voice Grade Port (Centrex/differ SWC /EBS-M5112)2,3,4 Basic Local Area			UEP9D	UEPYR	1.70	22.14	15.25	8.45	3.91		30.89	7.03			
		2-Wire Voice Grade Port (Centrex/differ SWC /EBS-M5312)2,3,4 Basic Local Area			UEP9D	UEPYS	1.70	22.14	15.25	8.45	3.91		30.89	7.03			
		2-Wire Voice Grade Port (Centrex/differ SWC /EBS-M5008)2,3,4 Basic Local Area			UEP9D	UEPY4	1.70	22.14	15.25	8.45	3.91		30.89	7.03			
		2-Wire Voice Grade Port (Centrex/differ SWC /EBS-M5208)2, 3 Basic Local Area			UEP9D	UEPY5	1.70	22.14	15.25	8.45	3.91		30.89	7.03			
		2-Wire Voice Grade Port (Centrex/differ SWC /EBS-M5216)2,3,4 Basic Local Area			UEP9D	UEPY6	1.70	22.14	15.25	8.45	3.91		30.89	7.03			
		2-Wire Voice Grade Port (Centrex/differ SWC /EBS-M5316)2,3,4 Basic Local Area			UEP9D	UEPY7	1.70	22.14	15.25	8.45	3.91		30.89	7.03			
		2-Wire Voice Grade Port, Diff Serving Wire Center - 800 Service Term 2,3			UEP9D	UEPYZ	1.70	22.14	15.25	8.45	3.91		30.89	7.03			
		2-Wire Voice Grade Port terminated in on Megalink or equivalent Basic Local Area			UEP9D	UEPY9	1.70	22.14	15.25	8.45	3.91		30.89	7.03			
		2-Wire Voice Grade Port Terminated on 800 Service Term Basic Local Area			UEP9D	UEPY2	1.70	22.14	15.25	8.45	3.91		30.89	7.03			
	AL, KY, LA, MS, SC, & TN Only																
		2-Wire Voice Grade Port (Centrex)			UEP9D	UEPQA	1.70	22.14	15.25	8.45	3.91		30.89	7.03			
		2-Wire Voice Grade Port (Centrex 800 termination)			UEP9D	UEPQB	1.70	22.14	15.25	8.45	3.91		30.89	7.03			
		2-Wire Voice Grade Port (Centrex / EBS-PSET)4			UEP9D	UEPQC	1.70	22.14	15.25	8.45	3.91		30.89	7.03			
		2-Wire Voice Grade Port (Centrex / EBS-M5009)4			UEP9D	UEPQD	1.70	22.14	15.25	8.45	3.91		30.89	7.03			
		2-Wire Voice Grade Port (Centrex / EBS-M5209)4			UEP9D	UEPQE	1.70	22.14	15.25	8.45	3.91		30.89	7.03			
		2-Wire Voice Grade Port (Centrex / EBS-M5112)4			UEP9D	UEPQF	1.70	22.14	15.25	8.45	3.91		30.89	7.03			
		2-Wire Voice Grade Port (Centrex / EBS-M5312)4			UEP9D	UEPQG	1.70	22.14	15.25	8.45	3.91		30.89	7.03			
		2-Wire Voice Grade Port (Centrex / EBS-M5008)4			UEP9D	UEPQT	1.70	22.14	15.25	8.45	3.91		30.89	7.03			
		2-Wire Voice Grade Port (Centrex / EBS-M5208)4			UEP9D	UEPQU	1.70	22.14	15.25	8.45	3.91		30.89	7.03			
		2-Wire Voice Grade Port (Centrex / EBS-M5216)4			UEP9D	UEPQV	1.70	22.14	15.25	8.45	3.91		30.89	7.03			
		2-Wire Voice Grade Port (Centrex / EBS-M5316)4			UEP9D	UEPQ3	1.70	22.14	15.25	8.45	3.91		30.89	7.03			
		2-Wire Voice Grade Port (Centrex with Caller ID)			UEP9D	UEPQH	1.70	22.14	15.25	8.45	3.91		30.89	7.03			
		2-Wire Voice Grade Port (Centrex/Caller ID/Msg Wtg Lamp Indication)4			UEP9D	UEPQW	1.70	22.14	15.25	8.45	3.91		30.89	7.03			
		2-Wire Voice Grade Port (Centrex/Msg Wtg Lamp Indication)4			UEP9D	UEPQJ	1.70	22.14	15.25	8.45	3.91		30.89	7.03			
		2-Wire Voice Grade Port (Centrex from diff Serving Wire Center) 2,3			UEP9D	UEPQM	1.70	22.14	15.25	8.45	3.91		30.89	7.03			
		2-Wire Voice Grade Port (Centrex/differ SWC /EBS-PSET)2,3,4			UEP9D	UEPQO	1.70	22.14	15.25	8.45	3.91		30.89	7.03			

UNBUNDLED NETWORK ELEMENTS - Tennessee														Attachment: 2		Exhibit: A	
CATEGORY		RATE ELEMENTS	Interim	Zone	BCS	USOC	RATES ($)					Svc Order Submitted Elec per LSR	Svc Order Submitted Manually per LSR	Incremental Charge - Manual Svc Order vs. Electronic-1st	Incremental Charge - Manual Svc Order vs. Electronic-Add'l	Incremental Charge - Manual Svc Order vs. Electronic-Disc 1st	Incremental Charge - Manual Svc Order vs. Electronic-Disc Add'l
							Rec	Nonrecurring		Nonrecurring Disconnect		OSS Rates ($)					
								First	Add'l	First	Add'l	SOMEC	SOMAN	SOMAN	SOMAN	SOMAN	SOMAN
		2-Wire Voice Grade Port (Centrex/differ SWC /EBS-M5009)2,3,4			UEP9D	UEPQP	1.70	22.14	15.25	8.45	3.91		30.89	7.03			
		2-Wire Voice Grade Port (Centrex/differ SWC /EBS-5209)2,3,4			UEP9D	UEPQQ	1.70	22.14	15.25	8.45	3.91		30.89	7.03			
		2-Wire Voice Grade Port (Centrex/differ SWC /EBS-M5112)2,3,4			UEP9D	UEPQR	1.70	22.14	15.25	8.45	3.91		30.89	7.03			
		2-Wire Voice Grade Port (Centrex/differ SWC /EBS-M5312)2,3,4			UEP9D	UEPQS	1.70	22.14	15.25	8.45	3.91		30.89	7.03			
		2-Wire Voice Grade Port (Centrex/differ SWC /EBS-M5008)2,3,4			UEP9D	UEPQ4	1.70	22.14	15.25	8.45	3.91		30.89	7.03			
		2-Wire Voice Grade Port (Centrex/differ SWC /EBS-M5208)2,3,4			UEP9D	UEPQ5	1.70	22.14	15.25	8.45	3.91		30.89	7.03			
		2-Wire Voice Grade Port (Centrex/differ SWC /EBS-M5216)2,3,4			UEP9D	UEPQ6	1.70	22.14	15.25	8.45	3.91		30.89	7.03			
		2-Wire Voice Grade Port (Centrex/differ SWC /EBS-M5316)2,3,4			UEP9D	UEPQ7	1.70	22.14	15.25	8.45	3.91		30.89	7.03			
		2-Wire Voice Grade Port, Diff Serving Wire Center - 800 Service Term 2,3			UEP9D	UEPQZ	1.70	22.14	15.25	8.45	3.91		30.89	7.03			
		2-Wire Voice Grade Port terminated in on Megalink or equivalent			UEP9D	UEPQ9	1.70	22.14	15.25	8.45	3.91		30.89	7.03			
		2-Wire Voice Grade Port Terminated on 800 Service Term			UEP9D	UEPQ2	1.70	22.14	15.25	8.45	3.91		30.89	7.03			
	Local Switching																
		Centrex Intercom Funtionality, per port			UEP9D	URECS	0.6381										
	Local Number Portability																
		Local Number Portability (1 per port)			UEP9D	LNPCC	0.35										
	Features																
		All Standard Features Offered, per port			UEP9D	UEPVF	0.00						30.89	7.03			
		All Select Features Offered, per port			UEP9D	UEPVS	0.00	433.78					30.89	7.03			
		All Centrex Control Features Offered, per port			UEP9D	UEPVC	0.00						30.89	7.03			
	NARS																
		Unbundled Network Access Register - Combination			UEP9D	UARCX	0.00	0.00	0.00	0.00	0.00		0.00	7.03			
		Unbundled Network Access Register - Inward			UEP9D	UAR1X	0.00	0.00	0.00	0.00	0.00		0.00	7.03			
		Unbundled Network Access Register - Outdial			UEP9D	UAROX	0.00	0.00	0.00	0.00	0.00		0.00	7.03			
	Miscellaneous Terminations																
	2-Wire Trunk Side																
		Trunk Side Terminations, each			UEP9D	CEND6	8.78	22.14	15.25	8.45	3.91		30.89	7.03			
	4-Wire Digital (1.544 Megabits)																
		DS1 Circuit Terminations, each			UEP9D	M1HD1	35.55	75.93	38.15				30.89	7.03			
		DS0 Channels Activiated per Channel			UEP9D	M1HDO	0.00	108.67					30.89	7.03			
	Interoffice Channel Mileage - 2-Wire																
		Interoffice Channel Facilities Termination			UEP9D	M1GBC	18.58	22.14	15.25	8.45	3.91		30.89	7.03			
		Interoffice Channel mileage, per mile or fraction of mile			UEP9D	M1GBM	0.0174										
	Feature Activations (DS0) Centrex Loops on Channelized DS1 Service																
	D4 Channel Bank Feature Activations																
		Feature Activation on D-4 Channel Bank Centrex Loop Slot			UEP9D	1PQWS	0.66										
		Feature Activation on D-4 Channel Bank FX line Side Loop Slot			UEP9D	1PQW6	0.66										
		Feature Activation on D-4 Channel Bank FX Trunk Side Loop Slot			UEP9D	1PQW7	0.66										
		Feature Activation on D-4 Channel Bank Centrex Loop Slot - Different Wire Center			UEP9D	1PQWP	0.66										
		Feature Activation on D-4 Channel Bank Private Line Loop Slot			UEP9D	1PQWV	0.66										
		Feature Activation on D-4 Channel Bank Tjie Line/Trunk Loop Slot			UEP9D	1PQWQ	0.66										
		Feature Activation on D-4 Channel Bank WATS Loop Slot			UEP9D	1PQWA	0.66										
	Non-Recurring Charges (NRC) Associated with UNE-P Centrex																
		NRC Conversion Currently Combined Switch-As-Is with allowed changes, per port			UEP9D	USAC2		1.03	0.29				30.89	7.03			

UNBUNDLED NETWORK ELEMENTS - Tennessee														Attachment: 2		Exhibit: A	
CATEGORY	RATE ELEMENTS	Interim	Zone	BCS	USOC	RATES ($)					Svc Order Submitted Elec per LSR	Svc Order Submitted Manually per LSR	Incremental Charge - Manual Svc Order vs. Electronic-1st	Incremental Charge - Manual Svc Order vs. Electronic-Add'l	Incremental Charge - Manual Svc Order vs. Electronic-Disc 1st	Incremental Charge - Manual Svc Order vs. Electronic-Disc Add'l
						Rec	Nonrecurring		Nonrecurring Disconnect				OSS Rates ($)			
							First	Add'l	First	Add'l	SOMEC	SOMAN	SOMAN	SOMAN	SOMAN	SOMAN
	New Centrex Standard Common Block			UEP9D	M1ACS	0.00	658.60					30.89	7.03			
	New Centrex Customized Common Block			UEP9D	M1ACC	0.00	658.60					30.89	7.03			
	NAR Establishment Charge, Per Occasion			UEP9D	URECA		68.57					30.89	7.03			
Additional Non-Recurring Charges (NRC)																
	Unbundled Miscellaneous Rate Element, Tag Loop at End Use Premise			UEP9D	URETL		8.33	0.83								
	Unbundled Miscellaneous Rate Element, Tag Design Loop at End Use Premise			UEP9D	URETN		11.23	1.10								
UNE-P CENTREX - EWSD (Valid in AL, FL, KY, LA, MS & TN)																
2-Wire VG Loop/2-Wire Voice Grade Port (Centrex) Combo																
UNE Port/Loop Combination Rates (Non-Design)																
	2-Wire VG Loop/2-Wire Voice Grade Port (Centrex) Port Combo - Non-Design		1	UEP9E		14.18										
	2-Wire VG Loop/2-Wire Voice Grade Port (Centrex)Port Combo - Non-Design		2	UEP9E		18.01										
	2-Wire VG Loop/2-Wire Voice Grade Port (Centrex)Port Combo - Non-Design		3	UEP9E		23.02										
UNE Port/Loop Combination Rates (Design)																
	2-Wire VG Loop/2-Wire Voice Grade Port (Centrex) Port Combo - Design		1	UEP9E		18.26										
	2-Wire VG Loop/2-Wire Voice Grade Port (Centrex)Port Combo - Design		2	UEP9E		23.33										
	2-Wire VG Loop/2-Wire Voice Grade Port (Centrex)Port Combo - Design		3	UEP9E		29.98										
UNE Loop Rate																
	2-Wire Voice Grade Loop (SL 1) - Zone 1		1	UEP9E	UECS1	12.48										
	2-Wire Voice Grade Loop (SL 1) - Zone 2		2	UEP9E	UECS1	16.31										
	2-Wire Voice Grade Loop (SL 1) - Zone 3		3	UEP9E	UECS1	21.32										
	2-Wire Voice Grade Loop (SL 2) - Zone 1		1	UEP9E	UECS2	16.56										
	2-Wire Voice Grade Loop (SL 2) - Zone 2		2	UEP9E	UECS2	21.63										
	2-Wire Voice Grade Loop (SL 2) - Zone 3		3	UEP9E	UECS2	28.28										
UNE Port Rate																
AL, FL, KY, LA, MS, & TN only																
	2-Wire Voice Grade Port (Centrex) Basic Local Area			UEP9E	UEPYA	1.70	22.14	15.25	8.45	3.91		30.89	7.03			
	2-Wire Voice Grade Port (Centrex 800 termination)Basic Local Area			UEP9E	UEPYB	1.70	22.14	15.25	8.45	3.91		30.89	7.03			
	2-Wire Voice Grade Port (Centrex with Caller ID)1Basic Local Area			UEP9E	UEPYH	1.70	22.14	15.25	8.45	3.91		30.89	7.03			
	2-Wire Voice Grade Port (Centrex from diff Serving Wire Center)2,3 Basic Local Area			UEP9E	UEPYM	1.70	22.14	15.25	8.45	3.91		30.89	7.03			
	2-Wire Voice Grade Port, Diff Serving Wire Center 2,3 - 800 Service Term - Basic Local Area			UEP9E	UEPYZ	1.70	22.14	15.25	8.45	3.91		30.89	7.03			
	2-Wire Voice Grade Port terminated in on Megalink or equivalent - Basic Local Area			UEP9E	UEPY9	1.70	22.14	15.25	8.45	3.91		30.89	7.03			
	2-Wire Voice Grade Port Terminated on 800 Service Term - Basic Local Area			UEP9E	UEPY2	1.70	22.14	15.25	8.45	3.91		30.89	7.03			
AL, KY, LA, MS, & TN Only																
	2-Wire Voice Grade Port (Centrex)			UEP9E	UEPQA	1.70	22.14	15.25	8.45	3.91		30.89	7.03			
	2-Wire Voice Grade Port (Centrex 800 termination)			UEP9E	UEPQB	1.70	22.14	15.25	8.45	3.91		30.89	7.03			
	2-Wire Voice Grade Port (Centrex with Caller ID)1			UEP9E	UEPQH	1.70	22.14	15.25	8.45	3.91		30.89	7.03			
	2-Wire Voice Grade Port (Centrex from diff Serving Wire Center)2,3			UEP9E	UEPQM	1.70	22.14	15.25	8.45	3.91		30.89	7.03			
	2-Wire Voice Grade Port, Diff Serving Wire Center 2,3 - 800 Service Term			UEP9E	UEPQZ	1.70	22.14	15.25	8.45	3.91		30.89	7.03			
	2-Wire Voice Grade Port terminated in on Megalink or equivalent			UEP9E	UEPQ9	1.70	22.14	15.25	8.45	3.91		30.89	7.03			
	2-Wire Voice Grade Port Terminated on 800 Service Term			UEP9E	UEPQ2	1.70	22.14	15.25	8.45	3.91		30.89	7.03			
Local Switching																
	Centrex Intercom Funtionality, per port			UEP9E	URECS	0.6381										

UNBUNDLED NETWORK ELEMENTS - Tennessee														Attachment: 2		Exhibit: A	
CATEGORY	RATE ELEMENTS	Interim	Zone	BCS	USOC	RATES ($)					Svc Order Submitted Elec per LSR	Svc Order Submitted Manually per LSR	Incremental Charge - Manual Svc Order vs. Electronic-1st	Incremental Charge - Manual Svc Order vs. Electronic-Add'l	Incremental Charge - Manual Svc Order vs. Electronic-Disc 1st	Incremental Charge - Manual Svc Order vs. Electronic-Disc Add'l
						Rec	Nonrecurring		Nonrecurring Disconnect		OSS Rates ($)					
							First	Add'l	First	Add'l	SOMEC	SOMAN	SOMAN	SOMAN	SOMAN	SOMAN
Local Number Portability																
	Local Number Portability (1 per port)			UEP9E	LNPCC	0.35										
Features																
	All Standard Features Offered, per port			UEP9E	UEPVF	0.00						30.89	7.03			
	All Select Features Offered, per port			UEP9E	UEPVS	0.00	433.78					30.89	7.03			
	All Centrex Control Features Offered, per port			UEP9E	UEPVC	0.00						30.89	7.03			
NARS																
	Unbundled Network Access Register - Combination			UEP9E	UARCX	0.00	0.00	0.00	0.00	0.00		0.00	7.03			
	Unbundled Network Access Register - Indial			UEP9E	UAR1X	0.00	0.00	0.00	0.00	0.00		0.00	7.03			
	Unbundled Network Access Register - Outdial			UEP9E	UAROX	0.00	0.00	0.00	0.00	0.00		0.00	7.03			
Miscellaneous Terminations																
2-Wire Trunk Side																
	Trunk Side Terminations, each			UEP9E	CEND6	8.78	22.14	15.25	8.45	3.91		30.89	7.03			
4-Wire Digital (1.544 Megabits)																
	DS1 Circuit Terminations, each			UEP9E	M1HD1	35.55	75.93	38.15				30.89	7.03			
	DS0 Channel Activated Per Channel			UEP9E	M1HDO	0.00	108.67					30.89	7.03			
Interoffice Channel Mileage - 2-Wire																
	Interoffice Channel Facilities Termination			UEP9E	M1GBC	18.58	22.14	15.25	8.45	3.91		30.89	7.03			
	Interoffice Channel mileage, per mile or fraction of mile			UEP9E	M1GBM	0.0174										
Feature Activations (DS0) Centrex Loops on Channelized DS1 Service																
D4 Channel Bank Feature Activations																
	Feature Activation on D-4 Channel Bank Centrex Loop Slot			UEP9E	1PQWS	0.66										
	Feature Activation on D-4 Channel Bank FX line Side Loop Slot			UEP9E	1PQW6	0.66										
	Feature Activation on D-4 Channel Bank FX Trunk Side Loop Slot			UEP9E	1PQW7	0.66										
	Feature Activation on D-4 Channel Bank Centrex Loop Slot - Different Wire Center			UEP9E	1PQWP	0.66										
	Feature Activation on D-4 Channel Bank Private Line Loop Slot			UEP9E	1PQWV	0.66										
	Feature Activation on D-4 Channel Bank Tjie Line/Trunk Loop Slot			UEP9E	1PQWQ	0.66										
	Feature Activation on D-4 Channel Bank WATS Loop Slot			UEP9E	1PQWA	0.66										
Non-Recurring Charges (NRC) Associated with UNE-P Centrex																
	NRC Conversion Currently Combined Switch-As-Is with allowed changes, per port			UEP9E	USAC2		1.03	0.29				30.89	7.03			
	New Centrex Standard Common Block			UEP9E	M1ACS	0.00	658.60					30.89	7.03			
	New Centrex Customized Common Block			UEP9E	M1ACC	0.00	658.60					30.89	7.03			
	NAR Establishment Charge, Per Occasion			UEP9E	URECA	0.00	68.57					30.89	7.03			
Additional Non-Recurring Charges (NRC)																
	Unbundled Miscellaneous Rate Element, Tag Loop at End Use Premise			UEP9E	URETL		8.33	0.83								
	Unbundled Miscellaneous Rate Element, Tag Design Loop at End Use Premise			UEP9E	URETN		11.23	1.10								
UNE-P CENTREX - DCO - Valid in AL, KY, LA, MS, & TN)																
2-Wire VG Loop/2-Wire Voice Grade Port (Centrex) Combo																
UNE Port/Loop Combination Rates (Non-Design)																
	2-Wire VG Loop/2-Wire Voice Grade Port (Centrex) Port Combo - Non-Design		1	UEP93		14.18										
	2-Wire VG Loop/2-Wire Voice Grade Port (Centrex)Port Combo - Non-Design		2	UEP93		18.01										
	2-Wire VG Loop/2-Wire Voice Grade Port (Centrex)Port Combo - Non-Design		3	UEP93		23.02										
UNE Port/Loop Combination Rates (Design)																
	2-Wire VG Loop/2-Wire Voice Grade Port (Centrex) Port Combo - Design		1	UEP93		18.26										
	2-Wire VG Loop/2-Wire Voice Grade Port (Centrex)Port Combo - Design		2	UEP93		23.33										

UNBUNDLED NETWORK ELEMENTS - Tennessee														Attachment: 2		Exhibit: A	
CATEGORY		RATE ELEMENTS	Interim	Zone	BCS	USOC	RATES ($)					Svc Order Submitted Elec per LSR	Svc Order Submitted Manually per LSR	Incremental Charge - Manual Svc Order vs. Electronic-1st	Incremental Charge - Manual Svc Order vs. Electronic-Add'l	Incremental Charge - Manual Svc Order vs. Electronic-Disc 1st	Incremental Charge - Manual Svc Order vs. Electronic-Disc Add'l
							Rec	Nonrecurring		Nonrecurring Disconnect		OSS Rates ($)					
								First	Add'l	First	Add'l	SOMEC	SOMAN	SOMAN	SOMAN	SOMAN	SOMAN
		2-Wire VG Loop/2-Wire Voice Grade Port (Centrex)Port Combo - Design		3	UEP93		29.98										
	UNE Loop Rate																
		2-Wire Voice Grade Loop (SL 1) - Zone 1		1	UEP93	UECS1	12.48										
		2-Wire Voice Grade Loop (SL 1) - Zone 2		2	UEP93	UECS1	16.31										
		2-Wire Voice Grade Loop (SL 1) - Zone 3		3	UEP93	UECS1	21.32										
		2-Wire Voice Grade Loop (SL 2) - Zone 1		1	UEP93	UECS2	16.56										
		2-Wire Voice Grade Loop (SL 2) - Zone 2		2	UEP93	UECS2	21.63										
		2-Wire Voice Grade Loop (SL 2) - Zone 3		3	UEP93	UECS2	28.28										
	UNE Port Rate																
	AL, KY, LA, MS, & TN only																
		2-Wire Voice Grade Port (Centrex) Basic Local Area			UEP93	UEPYA	1.70	22.14	15.25	8.45	3.91		30.89	7.03			
		2-Wire Voice Grade Port (Centrex 800 termination)Basic Local Area			UEP93	UEPYB	1.70	22.14	15.25	8.45	3.91		30.89	7.03			
		2-Wire Voice Grade Port (Centrex with Caller ID)1Basic Local Area			UEP93	UEPYH	1.70	22.14	15.25	8.45	3.91		30.89	7.03			
		2-Wire Voice Grade Port (Centrex from diff Serving Wire Center)2,3 Basic Local Area			UEP93	UEPYM	1.70	22.14	15.25	8.45	3.91		30.89	7.03			
		2-Wire Voice Grade Port, Diff Serving Wire Center - 2,3 - 800 Service Term - Basic Local Area			UEP93	UEPYZ	1.70	22.14	15.25	8.45	3.91		30.89	7.03			
		2-Wire Voice Grade Port terminated in on Megalink or equivalent - Basic Local Area			UEP93	UEPY9	1.70	22.14	15.25	8.45	3.91		30.89	7.03			
		2-Wire Voice Grade Port Terminated on 800 Service Term - Basic Local Area			UEP93	UEPY2	1.70	22.14	15.25	8.45	3.91		30.89	7.03			
		2-Wire Voice Grade Port (Centrex)			UEP93	UEPQA	1.70	22.14	15.25	8.45	3.91		30.89	7.03			
		2-Wire Voice Grade Port (Centrex 800 termination)			UEP93	UEPQB	1.70	22.14	15.25	8.45	3.91		30.89	7.03			
		2-Wire Voice Grade Port (Centrex with Caller ID)1			UEP93	UEPQH	1.70	22.14	15.25	8.45	3.91		30.89	7.03			
		2-Wire Voice Grade Port (Centrex from diff Serving Wire Center)2,3			UEP93	UEPQM	1.70	22.14	15.25	8.45	3.91		30.89	7.03			
		2-Wire Voice Grade Port, Diff Serving Wire Center - 2,3 -800 Service Term			UEP93	UEPQZ	1.70	22.14	15.25	8.45	3.91		30.89	7.03			
		2-Wire Voice Grade Port terminated in on Megalink or equivalent			UEP93	UEPQ9	1.70	22.14	15.25	8.45	3.91		30.89	7.03			
		2-Wire Voice Grade Port Terminated on 800 Service Term			UEP93	UEPQ2	1.70	22.14	15.25	8.45	3.91		30.89	7.03			
	Local Switching																
		Centrex Intercom Funtionality, per port			UEP93	URECS	0.6381										
	Local Number Portability																
		Local Number Portability (1 per port)			UEP93	LNPCC	0.35										
	Features																
		All Standard Features Offered, per port			UEP93	UEPVF	0.00										
		All Centrex Control Features Offered, per port			UEP93	UEPVC	0.00										
	NARS																
		Unbundled Network Access Register - Combination			UEP93	UARCX	0.00	0.00	0.00	0.00	0.00		0.00	7.03			
		Unbundled Network Access Register - Indial			UEP93	UAR1X	0.00	0.00	0.00	0.00	0.00		0.00	7.03			
		Unbundled Network Access Register - Outdial			UEP93	UAROX	0.00	0.00	0.00	0.00	0.00		0.00	7.03			
	Miscellaneous Terminations																
	2-Wire Trunk Side																
		Trunk Side Terminations, each			UEP93	CEND6	8.78	22.14	15.25	8.45	3.91		30.89	7.03			
	4-Wire Digital (1.544 Megabits)																
		DS1 Circuit Terminations, each			UEP93	M1HD1	35.55	75.93	38.15				30.89	7.03			
		DS0 Channels Activated, Per Channel			UEP93	M1HDO	0.00	108.67					30.89	7.03			
	Interoffice Channel Mileage - 2-Wire																
		Interoffice Channel Facilities Termination			UEP93	M1GBC	18.58	22.14	15.25	8.45	3.91		30.89	7.03			
		Interoffice Channel mileage, per mile or fraction of mile			UEP93	M1GBM	0.0174										
	Feature Activations (DS0) Centrex Loops on Channelized DS1 Service																
	D4 Channel Bank Feature Activations																
		Feature Activation on D-4 Channel Bank Centrex Loop Slot			UEP93	1PQWS	0.66										
		Feature Activation on D-4 Channel Bank FX Line Side Loop Slot			UEP93	1PQW6	0.66										

UNBUNDLED NETWORK ELEMENTS - Tennessee														Attachment: 2		Exhibit: A	
CATEGORY		RATE ELEMENTS	Interim	Zone	BCS	USOC	RATES ($)					Svc Order Submitted Elec per LSR	Svc Order Submitted Manually per LSR	Incremental Charge - Manual Svc Order vs. Electronic-1st	Incremental Charge - Manual Svc Order vs. Electronic-Add'l	Incremental Charge - Manual Svc Order vs. Electronic-Disc 1st	Incremental Charge - Manual Svc Order vs. Electronic-Disc Add'l
							Rec	Nonrecurring		Nonrecurring Disconnect		OSS Rates ($)					
								First	Add'l	First	Add'l	SOMEC	SOMAN	SOMAN	SOMAN	SOMAN	SOMAN
		Feature Activation on D-4 Channel Bank FX Trunk Side Loop Slot			UEP93	1PQW7	0.66										
		Feature Activation on D-4 Channel Bank Centrex Loop Slot - Different Wire Center			UEP93	1PQWP	0.66										
		Feature Activation on D-4 Channel Bank Private Line Loop Slot			UEP93	1PQWV	0.66										
		Feature Activation on D-4 Channel Bank Tie Line/Trunk Loop Slot			UEP93	1PQWQ	0.66										
		Feature Activation on D-4 Channel Bank WATS Loop Slot			UEP93	1PQWA	0.66										
	Non-Recurring Charges (NRC) Associated with UNE-P Centrex																
		NRC Conversion Currently Combined Switch-As-Is with allowed changes, per port			UEP93	USAC2		1.03	0.29				30.89	7.03			
		New Centrex Standard Common Block			UEP93	M1ACS	0.00	658.60					30.89	7.03			
		New Centrex Customized Common Block			UEP93	M1ACC	0.00	658.60					30.89	7.03			
		NAR Establishment Charge, Per Occasion			UEP93	URECA		68.57					30.89	7.03			
	Additional Non-Recurring Charges (NRC)																
		Unbundled Miscellaneous Rate Element, Tag Loop at End Use Premise			UEP93	URETL		8.33	0.83								
		Unbundled Miscellaneous Rate Element, Tag Design Loop at End Use Premise			UEP93	URETN		11.23	1.10								
	Note 1 - Required Port for Centrex Control in 1AESS, 5ESS & EWSD																
	Note 2 - Requres Interoffice Channel Mileage																
	Note 3 - Installation is combination of Installation charge for SL2 Loop and Port																
	Note 4 - Requires Specific Customer Premises Equipment																
	Note: Rates displaying an "R" in Interim column are interim and subject to rate true-up as set forth in General Terms and Conditions.																

Attachment 3

Network Interconnection

TABLE OF CONTENTS

1. GENERAL 3

2. DEFINITIONS: (FOR THE PURPOSE OF THIS ATTACHMENT) 3

3. NETWORK INTERCONNECTION 5

4. INTERCONNECTION TRUNK GROUP ARCHITECTURES 7

5. NETWORK DESIGN AND MANAGEMENT FOR INTERCONNECTION 14

6. LOCAL DIALING PARITY 17

7. INTERCONNECTION COMPENSATION 18

8. FRAME RELAY SERVICE INTERCONNECTION 24

9. ORDERING CHARGES 26

10 BASIC 911 AND E911 INTERCONNECTION 26

Rates	**Exhibit A**
Basic Architecture	**Exhibit B**
One Way Architecture	**Exhibit C**
Two Way Architecture	**Exhibit D**
Supergroup Architecture	**Exhibit E**

NETWORK INTERCONNECTION

1. GENERAL

1.1 The Parties shall provide interconnection with each other's networks for the transmission and routing of telephone exchange service (Local Traffic), ISP-bound Traffic, and exchange access (Switched Access Traffic) on the following terms:

2. DEFINITIONS: (FOR THE PURPOSE OF THIS ATTACHMENT)

For purposes of this attachment only, the following terms shall have the definitions set forth below:

2.1 **Automatic Location Identification (ALI)** is a feature by which the address associated with the calling party's telephone number (ANI) is forwarded to the PSAP for display. Access to the ALI database is described in Attachment 2 to this Agreement.

2.2 **Automatic Number Identification (ANI)** corresponds to the seven-digit telephone number assigned by the serving local exchange carrier.

2.3 **Basic 911 Service (B911)** routes a call to one centralized answering location. The attendant at the answering location obtains the pertinent information that identifies the call and the caller's needs. The attendant then determines the appropriate agency and dials a 7-digit number to transfer the caller to that agency. The calling party's emergency information is verbally relayed to the responding agency and a unit is dispatched to the caller's location.

2.4 **Call Termination** has the meaning set forth for "termination" in 47CFR § 51.701(d).

2.5 **Call Transport** has the meaning set forth for "transport" in 47 CFR § 51.701(c).

2.6 **Call Transport and Termination** is used collectively to mean the switching and transport functions from the Interconnection Point to the last point of switching.

2.7 **Common (Shared) Transport** is defined as the transport of the originating Party's traffic by the terminating Party over the terminating Party's common (shared) facilities between (1) the terminating Party's tandem switch and end office switch, (2) between the terminating Party's tandem switches, and/or (3) between the terminating Party's host and remote end office switches. All switches referred herein must be entered into the Local Exchange Routing Guide (LERG).

2.8 **Dedicated Interoffice Facility** is defined as a switch transport facility between a Party's Serving Wire Center and the first point of switching within the LATA on the other Party's network.

2.9 **End Office Switching** is defined as the function that establishes a communications path between the trunk side and line side of the End Office switch.

2.10 **Enhanced 911 Service** provides features not present in Basic 911 Service, including ANI and ALI display, Selective Routing (SR) and other standard and optional features.

2.11 **Fiber Meet** is an interconnection arrangement whereby the Parties physically interconnect their networks via an optical fiber interface at which one Party's facilities, provisioning, and maintenance responsibility begins and the other Party's responsibility ends.

2.12 **Final Trunk Group** is defined as the trunk group that does not carry overflow traffic.

2.13 **Interconnection Point (IP)** is the physical telecommunications equipment interface that interconnects the networks of BellSouth and BLC Management.

2.14 **IntraLATA Toll Traffic** is as defined in Section 7 of this Attachment.

2.15 **ISP-bound Traffic** is as defined in Section 7 of this Attachment.

2.16 **Local Channel** is defined as a switched transport facility between a Party's Interconnection Point and the IP's Serving Wire Center.

2.17 **Local Traffic** is as defined in Section 7 of this Attachment.

2.18 **Public Safety Answering Point (PSAP)** is the answering location for 911 calls.

2.19 **Reciprocal Trunk Group** is defined as a one-way trunk group carrying BellSouth originated traffic to be terminated by BLC Management.

2.20 **Serving Wire Center** is defined as the wire center owned by one Party from which the other Party would normally obtain dial tone for its IP.

2.21 **Selective Routing (SR)** is a standard feature that routes an E911 call from the tandem to the designated PSAP based upon the address of the ANI of the calling party.

2.22 **Tandem Switching** is defined as the function that establishes a communications path between two switching offices through a third switching office through the provision of trunk side to trunk side switching.

2.23 **Transit Traffic** is traffic originating on BLC Management's network that is switched and/or transported by BellSouth and delivered to a third party's network, or traffic originating on a third party's network that is switched and/or transported by BellSouth and delivered to BLC Management's network.

3. NETWORK INTERCONNECTION

3.1 This Attachment pertains only to the provision of network interconnection where BLC Management owns, leases from a third party or otherwise provides its own switch(es).

3.2 Network interconnection may be provided by the Parties at any technically feasible point within BellSouth's network. Requests to BellSouth for interconnection at points other than as set forth in this Attachment may be made through the Bona Fide Request/New Business Request (BFR/NBR) process set out in this Agreement.

3.2.1 Each Party is responsible for providing, engineering and maintaining the network on its side of the IP. The IP must be located within BellSouth's serving territory in the LATA in which traffic is originating. The IP determines the point at which the originating Party shall pay the terminating Party for the Call Transport and Termination of Local Traffic, ISP-bound Traffic and IntraLATA Toll Traffic.

3.2.2 Pursuant to the provisions of this Attachment, the location of the initial IP in a given LATA shall be established by mutual agreement of the Parties. Subject to the requirements for installing additional IPs, as set forth below, any IPs existing prior to the Effective Date of the Agreement will be accepted as initial IPs and will not require re-grooming. When the Parties mutually agree to utilize two-way interconnection trunk groups for the exchange of Local Traffic, ISP-bound Traffic and IntraLATA Toll Traffic between each other, the Parties shall mutually agree to the location of IP(s). If the Parties are unable to agree to a mutual initial IP, each Party, as originating Party, shall establish a single IP in the LATA for the delivery of its originated Local Traffic, ISP-bound Traffic and IntraLATA Toll Traffic to the other Party for Call Transport and Termination by the terminating Party.

3.2.3 When first establishing the interconnection arrangement in each LATA, the location of the IP shall be established by mutual agreement of the Parties. In selecting the IP, both Parties will act in good faith and select the point that is most efficient for both Parties. If the Parties are unable to agree on the location of the IP, each Party will designate IPs for its originated traffic. Additional IP(s) in a LATA may be established by mutual agreement of the Parties. Notwithstanding the foregoing, additional IP(s) in a particular LATA shall be established, at the request of either Party, when the Local Traffic and ISP-bound Traffic exceeds 8.9 million minutes per month for three consecutive months at the proposed location of the additional IP. BellSouth will not request the establishment of an IP where physical or virtual collocation space is not available or where BellSouth fiber connectivity is not available. When the Parties agree to utilize two-way interconnection trunk groups for the exchange of Local Traffic, ISP-bound Traffic and IntraLATA Toll Traffic the Parties must agree to the location of the IP(s).

3.3 **Interconnection via Dedicated Facilities**

3.3.1 **Local Channel Facilities.** As part of Call Transport and Termination, the originating Party may obtain Local Channel facilities from the terminating Party. The percentage of Local Channel facilities utilized for Local Traffic shall be determined based upon the application of the Percent Local Facility (PLF) Factor on a statewide basis. The charges applied to the percentage of Local Channel facilities used for Local Traffic as determined by the PLF are as set forth in Exhibit A to this Attachment. The remaining percentage of Local Channel facilities shall be billed at BellSouth's applicable access tariff rates.

3.3.2 **Dedicated Interoffice Facilities.** As a part of Call Transport and Termination, the originating Party may obtain Dedicated Interoffice Facilities from the terminating Party. The percentage of Dedicated Interoffice Facilities utilized for Local Traffic shall be determined based upon the application of the Percent Local Facility (PLF) Factor on a statewide basis. The charges applied to the percentage of the Dedicated Interoffice Facilities used for Local Traffic as determined by the PLF are as set forth in Exhibit A to this Attachment. The remaining percentage of the Dedicated Interoffice Facilities shall be billed at BellSouth's applicable access tariff rates.

3.3.3 The facilities purchased pursuant to this Section 3 shall be ordered via the Access Service Request (ASR) process.

3.4 **Fiber Meet**

3.4.1 Notwithstanding Section 3.2.1, 3.2.2, and 3.2.3 above, if BLC Management elects to establish interconnection with BellSouth pursuant to a Fiber Meet Local Channel, BLC Management and BellSouth shall jointly engineer, operate and maintain a Synchronous Optical Network (SONET) transmission system by which they shall interconnect their transmission and routing of Local Traffic via a Local Channel at either the DS1 or DS3 level. The Parties shall work jointly to determine the specific transmission system. However, BLC Management's SONET transmission system must be compatible with BellSouth's equipment, and the Data Communications Channel (DCC) must be turned off.

3.4.2 Each Party, at its own expense, shall procure, install and maintain the agreed upon SONET transmission system in its network.

3.4.3 The Parties shall agree to a Fiber Meet point between the BellSouth Serving Wire Center and the BLC Management Serving Wire Center. The Parties shall deliver their fiber optic facilities to the Fiber Meet point with sufficient spare length to reach the fusion splice point for the Fiber Meet Point. BellSouth shall, at its own expense, provide and maintain the fusion splice point for the Fiber Meet. A building type Common Language Location Identification (CLLI) code will be established for each Fiber Meet point. All orders for interconnection facilities from the Fiber Meet point shall indicate the Fiber Meet point as the originating point for the facility.

3.4.4 Upon verbal request by BLC Management, BellSouth shall allow BLC Management access to the fusion splice point for the Fiber Meet point for maintenance purposes on BLC Management's side of the Fiber Meet point.

3.4.5 Neither Party shall charge the other for its Local Channel portion of the Fiber Meet facility used exclusively for Local Traffic. All other appropriate charges will apply. BLC Management shall be billed for a mixed use of the Local Channel using the actual traffic BLC Management elects to transmit over the facility and the rates from this Agreement and the appropriate tariff(s). Charges for switched and special access services shall be billed in accordance with the applicable access service tariff.

4. INTERCONNECTION TRUNK GROUP ARCHITECTURES

4.1 BellSouth and BLC Management shall establish interconnecting trunk groups and trunk group configurations between networks, including the use of one-way or two-way trunks in accordance with the following provisions set forth in this Agreement**.** For trunking purposes, traffic will be routed based on the digits dialed by the originating End User and in accordance with the LERG.

4.2 BLC Management shall establish an interconnection trunk group(s) to at least one BellSouth access tandem within the LATA for the delivery of BLC Management's originated Local Traffic, ISP-bound Traffic and IntraLATA Toll Traffic and for the receipt and delivery of Transit Traffic. To the extent BLC Management desires to deliver Local Traffic, ISP-bound Traffic, IntraLATA Toll Traffic and/or Transit Traffic to BellSouth access tandems within the LATA, other than the tandems(s) to which BLC Management has established interconnection trunk groups, BLC Management shall order Multiple Tandem Access, as described in this Attachment, to such other BellSouth access tandems.

4.2.1 Notwithstanding the forgoing, BLC Management shall establish an interconnection trunk group(s) to all BellSouth access and local tandems in the LATA where BLC Management has homed (i.e. assigned) its NPA/NXXs. BLC Management shall home its NPA/NXXs on the BellSouth tandems that serve the exchange rate center areas to which the NPA/NXXs are assigned. The specified exchange rate center assigned to each BellSouth tandem is defined in the LERG. BLC Management shall enter its NPA/NXX access and/or local tandem homing arrangements into the LERG.

4.3 Switched access traffic will be delivered to and from Interexchange Carriers (IXCs) based on BLC Management's NXX access tandem homing arrangement as specified by BLC Management in the LERG.

4.4 Any BLC Management interconnection request that (1) deviates from the interconnection trunk group architectures as described in this Agreement, (2) affects traffic delivered to BLC Management from a BellSouth switch, and (3)

requires special BellSouth switch translations and other network modifications will require BLC Management to submit a BFR/NBR via the BFR/NBR Process as set forth in this Agreement.

4.5 Recurring and nonrecurring rates associated with interconnecting trunk groups between BellSouth and BLC Management are set forth in Exhibit A. To the extent a rate associated with the interconnecting trunk group is not set forth in Exhibit A, the rate shall be as set forth in the appropriate BellSouth tariff for switched access services.

4.6 For two-way trunk groups that carry only both Parties' Local Traffic, the Parties shall be compensated at 50% of the nonrecurring and recurring rates for dedicated trunks and DS1 facilities. BLC Management shall be responsible for ordering and paying for any two-way trunks carrying Transit Traffic.

4.7 All trunk groups will be provisioned as Signaling System 7 (SS7) capable where technically feasible. If SS7 is not technically feasible multi-frequency (MF) protocol signaling shall be used.

4.8 In cases where BLC Management is also an IXC, the IXC's Feature Group D (FG D) trunk group(s) must remain separate from the local interconnection trunk group(s).

4.9 Each Party shall order interconnection trunks and trunk group including trunk and trunk group augmentations via the ASR process. A Firm Order Confirmation (FOC) shall be returned to the ordering Party, after receipt of a valid, error free ASR, within the timeframes set forth in each state's applicable Performance Measures. Notwithstanding the foregoing, blocking situations and projects shall be managed through BellSouth's Carrier Interconnection Switching Center (CISC) Project Management Group and BLC Management's equivalent trunking group, and FOCs for such orders shall be returned in the timeframes applicable to the project. A project is defined as (1) a new trunk group or (2) a request for more than 96 trunks on a single or multiple group(s) in a given BellSouth local calling area.

4.10 **Interconnection Trunk Groups for Exchange of Local Traffic and Transit Traffic**

Upon mutual agreement of the Parties in a joint planning meeting, the Parties' shall exchange Local Traffic on two-way interconnection trunk group(s) with the quantity of trunks being mutually determined and the provisioning being jointly coordinated. Furthermore, the Parties shall agree upon the IP(s) for two-way interconnection trunk groups transporting both Parties' Local Traffic, ISP-bound Traffic and IntraLATA Toll Traffic. BLC Management shall order such two-way trunks via the Access Service Request (ASR) process. BellSouth will use the Trunk Group Service Request (TGSR) to request changes in trunking.

Furthermore, the Parties shall jointly review trunk performance and forecasts on a periodic basis. The Parties' use of two-way interconnection trunk groups for the transport of Local Traffic, ISP-bound Traffic and IntraLATA Toll Traffic between the Parties does not preclude either Party from establishing additional one-way interconnection trunks for the delivery of its originated Local Traffic, ISP-bound Traffic and IntraLATA Toll Traffic to the other Party.

4.10.1 **BellSouth Access Tandem Interconnection**

BellSouth access tandem interconnection at a single access tandem provides access to those end offices subtending that access tandem (Intratandem Access). Access tandem interconnection is available for any of the following access tandem architectures

4.10.1.1 **Basic Architecture**

In the basic architecture, BLC Management's originating Local Traffic, ISP-bound Traffic and IntraLATA Toll Traffic and originating and terminating Transit Traffic is transported on a single two-way trunk group between BLC Management and BellSouth access tandem(s) within a LATA to provide Intratandem Access. This trunk group carries Transit Traffic between BLC Management and Independent Companies, Interexchange Carriers, other CLECs, CMRS providers that have a Meet Point Billing arrangement with BellSouth, and other network providers with which BLC Management desires to exchange traffic. This trunk group also carries BLC Management originated Transit Traffic transiting a single BellSouth access tandem destined to third party tandems such as an Independent Company tandem or other CLEC tandem. BellSouth originated Local Traffic, ISP-bound Traffic and IntraLATA Toll Traffic is transported on a separate single one-way trunk group terminating to BLC Management. Other trunk groups for operator services, directory assistance, emergency services and intercept must be established pursuant to the applicable BellSouth tariff if service is requested. The LERG contains current routing and tandem serving arrangements. The basic Architecture is illustrated in Exhibit B.

4.10.1.2 **One-Way Trunk Group Architecture**

In one-way trunk group architecture, the Parties interconnect using three separate trunk groups. A one-way trunk group provides Intratandem Access for BLC Management-originated Local Traffic, ISP-bound Traffic and IntraLATA Toll Traffic destined for BellSouth End Users. A second one-way trunk group carries BellSouth-originated Local Traffic, ISP-bound Traffic and IntraLATA Toll Traffic destined for BLC Management End-Users. A two-way trunk group provides Intratandem Access for BLC Management's originating and terminating Transit Traffic. This trunk group carries Transit Traffic between BLC Management and Independent Companies, Interexchange Carriers, other CLECs, CMRS providers that have a Meet Point Billing arrangement with BellSouth, and other network providers with which BLC Management desires to exchange traffic. This trunk group also carries BLC Management originated Transit Traffic transiting a single

BellSouth access tandem destined to third party tandems such as an Independent Company tandem or other CLEC tandem. BellSouth originated Local Traffic, ISP-bound Traffic and IntraLATA Toll Traffic is transported on a separate single one-way trunk group terminating to BLC Management. Other trunk groups for operator services, directory assistance, emergency services and intercept must be established pursuant to the applicable BellSouth tariff if service is requested. The LERG contains current routing and tandem serving arrangements. The one-way trunk group architecture is illustrated in Exhibit C.

4.10.1.3 **Two-Way Trunk Group Architecture**

The two-way trunk group Architecture establishes one two-way trunk group to provide Intratandem Access for the exchange of Local Traffic, ISP-bound Traffic and IntraLATA Toll Traffic between BLC Management and BellSouth. In addition, a separate two-way transit trunk group must be established for BLC Management's originating and terminating Transit Traffic. This trunk group carries Transit Traffic between BLC Management and Independent Companies, Interexchange Carriers, other CLECs, CMRS providers that have a Meet Point Billing arrangement with BellSouth, and other network providers with which BLC Management desires to exchange traffic. This trunk group also carries BLC Management originated Transit Traffic transiting a single BellSouth access tandem destined to third party tandems such as an Independent Company tandem or other CLEC tandem. BellSouth originated traffic may, in order to prevent or remedy traffic blocking situations, be transported on a separate single one-way trunk group terminating to BLC Management. However, where BLC Management is responsive in a timely manner to BellSouth's transport needs for its originated traffic, BellSouth originating traffic will be placed on the two-way Local Traffic trunk group carrying ISP-bound Traffic and IntraLATA Toll Traffic. Other trunk groups for operator services, directory assistance, emergency services and intercept must be established pursuant to the applicable BellSouth tariff if service is requested. The LERG contains current routing and tandem serving arrangements. The two-way trunk group architecture is illustrated in Exhibit D.

4.10.1.4 **Supergroup Architecture**

In the supergroup architecture, the Parties' Local Traffic, ISP-bound Traffic and IntraLATA Toll Traffic and BLC Management's Transit Traffic are exchanged on a single two-way trunk group between BLC Management and BellSouth to provide Intratandem Access to BLC Management. This trunk group carries Transit Traffic between BLC Management and Independent Companies, Interexchange Carriers, other CLECs, CMRS providers that have a Meet Point Billing arrangement with BellSouth, and other network providers with which BLC Management desires to exchange traffic. This trunk group also carries BLC Management originated Transit Traffic transiting a single BellSouth access tandem destined to third party tandems such as an Independent Company tandem or other CLEC tandem. BellSouth originated traffic may, in order to prevent or remedy traffic blocking situations, be transported on a separate single one-way trunk group

terminating to BLC Management. However, where BLC Management is responsive in a timely manner to BellSouth's transport needs for its originated traffic, BellSouth originating traffic will be placed on the Supergroup. Other trunk groups for operator services, directory assistance, emergency services and intercept must be established pursuant to the applicable BellSouth tariff if service is requested. The LERG contains current routing and tandem serving arrangements. The supergroup architecture is illustrated in Exhibit E.

4.10.1.5 **Multiple Tandem Access Interconnection**

4.10.1.5.1 Where BLC Management does not choose access tandem interconnection at every BellSouth access tandem within a LATA, BLC Management may utilize BellSouth's multiple tandem access interconnection (MTA). To utilize MTA BLC Management must establish an interconnection trunk group(s) at a BellSouth access tandem through multiple BellSouth access tandems within the LATA as required. BellSouth will route BLC Management's originated Local Traffic, ISP-bound Traffic and IntraLATA Toll Traffic for LATA wide transport and termination. BLC Management must also establish an interconnection trunk group(s) at all BellSouth access tandems where BLC Management NXXs are homed as described in Section 4.2.1 above. If BLC Management does not have NXXs homed at any particular BellSouth access tandem within a LATA and elects not to establish an interconnection trunk group(s) at such BellSouth access tandem, BLC Management can order MTA in each BellSouth access tandem within the LATA where it does have an interconnection trunk group(s) and BellSouth will terminate BLC Management's Local Traffic, ISP-bound Traffic and IntraLATA Toll Traffic to End-Users served through those BellSouth access tandems where BLC Management does not have an interconnection trunk group(s). MTA shall be provisioned in accordance with BellSouth's Ordering Guidelines.

4.10.1.5.2 BLC Management may also utilize MTA to route its originated Transit Traffic; provided, however, that MTA may not be utilized to route switched access traffic that transits the BellSouth network to an Interexchange Carrier (IXC). Switched access traffic originated by or terminated to BLC Management will be delivered to and from IXCs based on BLC Management's NXX access tandem homing arrangement as specified by BLC Management in the LERG.

4.10.1.5.3 Compensation for MTA shall be at the applicable tandem switching and transport charges specified in Exhibit A to this Attachment and shall be billed in addition to any Call Transport and Termination charges.

4.10.1.5.4 To the extent BLC Management does not purchase MTA in a LATA served by multiple access tandems, BLC Management must establish an interconnection trunk group(s) to every access tandem in the LATA to serve the entire LATA. To the extent BLC Management routes its traffic in such a way that utilizes

BellSouth's MTA service without properly ordering MTA, BLC Management shall pay BellSouth the associated MTA charges.

4.10.2 **Local Tandem Interconnection**

4.10.2.1 Local Tandem Interconnection arrangement allows BLC Management to establish an interconnection trunk group(s) at BellSouth local tandems for: (1) the delivery of BLC Management-originated Local Traffic, ISP-bound Traffic and IntraLATA Toll Traffic transported and terminated by BellSouth to BellSouth end offices served by those BellSouth local tandems, and (2) for local Transit Traffic transported by BellSouth for third party network providers who have also established an interconnection trunk group(s) at those BellSouth local tandems.

4.10.2.2 When a specified local calling area is served by more than one BellSouth local tandem, BLC Management must designate a "home" local tandem for each of its assigned NPA/NXXs and establish trunk connections to such local tandems. Additionally, BLC Management may choose to establish an interconnection trunk group(s) at the BellSouth local tandems where it has no codes homing but is not required to do so. BLC Management may deliver Local Traffic, ISP-bound Traffic and IntraLATA Toll Traffic to a "home" BellSouth local tandem that is destined for other BellSouth or third party network provider end offices subtending other BellSouth local tandems in the same local calling area where BLC Management does not choose to establish an interconnection trunk group(s). It is BLC Management's responsibility to enter its own NPA/NXX local tandem homing arrangements into the LERG either directly or via a vendor in order for other third party network providers to determine appropriate traffic routing to BLC Management's codes. Likewise, BLC Management shall obtain its routing information from the LERG.

4.10.2.3 Notwithstanding establishing an interconnection trunk group(s) to BellSouth's local tandems, BLC Management must also establish an interconnection trunk group(s) to BellSouth access tandems within the LATA on which BLC Management has NPA/NXXs homed for the delivery of Interexchange Carrier Switched Access (SWA) and toll traffic, and traffic to Type 2A CMRS connections located at the access tandems. BellSouth shall not switch SWA traffic through more than one BellSouth access tandem. SWA, Type 2A CMRS or toll traffic routed to the local tandem in error will not be backhauled to the BellSouth access tandem for completion. (Type 2A CMRS interconnection is defined in BellSouth's A35 General Subscriber Services Tariff).

4.10.2.4 BellSouth's provisioning of Local Tandem Interconnection assumes that BLC Management has executed the necessary local interconnection agreements with the other third party network providers subtending those local tandems as required by the Act.

4.10.3 **Direct End Office-to-End Office Interconnection**

4.10.3.1 Direct End Office-to-End Office one-way or two-way interconnection trunk groups allow for the delivery of a Party's originating Local Traffic, ISP-bound Traffic and IntraLATA Toll Traffic to the terminating Party on a direct end office-to-end office basis.

4.10.3.2 The Parties shall utilize direct end office-to-end office trunk groups under any one of the following conditions:

4.10.3.2.1 Tandem Exhaust - If a tandem through which the Parties are interconnected is unable to, or is forecasted to be unable to support additional traffic loads for any period of time, the Parties will mutually agree on an end office trunking plan that will alleviate the tandem capacity shortage and ensure completion of traffic between BLC Management and BellSouth.

4.10.3.2.2 Traffic Volume –To the extent either Party has the capability to measure the amount of traffic between BLC Management's switch and a BellSouth end office and where such traffic exceeds or is forecasted to exceed a single DS1 of traffic per month, then the Parties shall install and retain direct end office trunking sufficient to handle such traffic volumes. Either Party will install additional capacity between such points when overflow traffic exceeds or is forecasted to exceed a single DS1 of traffic per month. In the case of one-way trunking, additional trunking shall only be required by the Party whose trunking has achieved the preceding usage threshold.

4.10.3.2.3 Mutual Agreement - The Parties may install direct end office trunking upon mutual agreement in the absence of conditions (1) or (2) above.

4.10.4 **Transit Traffic Trunk Group**

Transit Traffic trunks can either be two-way trunks or two one-way trunks ordered by BLC Management to deliver and receive Transit Traffic. Establishing Transit Traffic trunks at BellSouth access and local tandems provides intratandem access to the third parties also interconnected at those tandems.

4.10.4.1 **Toll Free Traffic**

4.10.4.1.1 If BLC Management chooses BellSouth to perform the Service Switching Point (SSP) Function (i.e., handle Toll Free database queries) from BellSouth's switches, all BLC Management originating Toll Free traffic will be routed over the Transit Traffic Trunk Group and shall be delivered using GR-394 format. Carrier Code "0110" and Circuit Code (to be determined for each LATA) shall be used for all such calls.

4.10.4.1.2 BLC Management may choose to perform its own Toll Free database queries from its switch. In such cases, BLC Management will determine the nature (local/intraLATA/interLATA) of the Toll Free call (local/IntraLATA/InterLATA) based on the response from the database. If the call is a BellSouth local or

intraLATA Toll Free call, BLC Management will route the post-query local or IntraLATA converted ten-digit local number to BellSouth over the local or intraLATA trunk group. If the call is a third party (ICO, IXC, CMRS or other CLEC) local or intraLATA Toll Free call, BLC Management will route the post-query local or intraLATA converted ten-digit local number to BellSouth over the Transit Traffic Trunk Group and BLC Management shall provide to BellSouth a Toll Free billing record when appropriate. If the query reveals the call is an interLATA Toll Free call, BLC Management will route the post-query interLATA Toll Free call (1) directly from its switch for carriers interconnected with its network or (2) over the Transit Traffic Trunk Group to carriers that are not directly connected to BLC Management's network but that are connected to BellSouth's access tandem.

4.10.5 All post-query Toll Free calls for which BLC Management performs the SSP function, if delivered to BellSouth, shall be delivered using GR-394 format for calls destined to IXCs, and GR-317 format for calls destined to end offices that directly subtend a BellSouth access tandem within the LATA.

5. NETWORK DESIGN AND MANAGEMENT FOR INTERCONNECTION

5.1 Network Management and Changes. The Parties will exchange toll-free maintenance contact numbers and escalation procedures. The Parties will provide public notice of network changes in accordance with applicable federal and state rules and regulations.

5.2 Interconnection Technical Standards. The interconnection of all networks will be based upon accepted industry/national guidelines for transmission standards and traffic blocking criteria. Interconnecting facilities shall conform, at a minimum, to the telecommunications industry standard of DS-1 pursuant to Telcordia Standard No. TR-NWT-00499. Where BLC Management chooses to utilize Signaling System 7 signaling, also known as Common Channel Signaling (SS7), SS7 connectivity is required between the BLC Management switch and the BellSouth Signaling Transfer Point (STP). BellSouth will provide SS7 signaling using Common Channel Signaling Access Capability in accordance with the technical specifications set forth in the BellSouth Guidelines to Technical Publication, TR-TSV-000905. Facilities of each Party shall provide the necessary on-hook, off-hook answer and disconnect supervision and shall provide calling number ID (Calling Party Number) when technically feasible.

5.3 Quality of Interconnection. The local interconnection for the transmission and routing of telephone exchange service and exchange access that each Party provides to each other will be at least equal in quality to what it provides to itself and any subsidiary or affiliate, where technically feasible, or to any other Party to which each Party provides local interconnection.

5.4 Network Management Controls. Both Parties will work cooperatively to apply sound network management principles by invoking appropriate network management controls (e.g., call gapping) to alleviate or prevent network congestion.

5.5 SS7 Signaling. Both Parties will utilize LEC-to-LEC SS7 Signaling, where available, in conjunction with all traffic in order to enable full interoperability of CLASS features and functions except for call return. All SS7 signaling parameters will be provided, including but not limited to automatic number identification (ANI), originating line information (OLI) calling company category and charge number. All privacy indicators will be honored, and the Parties will exchange Transactional Capabilities Application Part (TCAP) messages to facilitate full interoperability of SS7-based features between the respective networks. Neither Party shall alter the SS7 parameters, or be a party to altering such parameters, or knowingly pass SS7 parameters that have been altered in order to circumvent appropriate interconnection charges.

5.6 Signaling Call Information. BellSouth and BLC Management will send and receive 10 digits for Local Traffic. Additionally, BellSouth and BLC Management will exchange the proper call information, i.e. originated call company number and destination call company number, CIC, and OZZ, including all proper translations for routing between networks and any information necessary for billing.

5.7 **Forecasting for Trunk Provisioning**

5.7.1 Within six (6) months after execution of this Agreement, BLC Management shall provide an initial interconnection trunk group forecast for each LATA in which it plans to provide service within BellSouth's region. Upon receipt of BLC Management's forecast, the Parties shall conduct a joint planning meeting to develop a joint interconnection trunk group forecast. Each forecast provided under this Section shall be deemed "Confidential Information" under the General Terms and Conditions of this Agreement.

5.7.1.1 At a minimum, the forecast shall include the projected quantity of Transit Trunks, BLC Management-to-BellSouth one-way trunks (BLC Management Trunks), BellSouth-to-BLC Management one-way trunks (Reciprocal Trunk Groups) and/or two-way interconnection trunks, if the Parties have agreed to interconnect using two-way trunking to transport the Parties' Local Traffic and IntraLATA Toll Traffic. The quantities shall be projected for a minimum of six months and shall include an estimate of the current year plus the next two years total forecasted quantities. The Parties shall mutually develop Reciprocal Trunk Groups and/or two-way interconnection trunk forecast quantities.

5.7.1.2 All forecasts shall include, at a minimum, Access Carrier Terminal Location (ACTL), trunk group type (local/intraLATA toll, Transit, Operator Services, 911, etc.), A location/Z location (CLLI codes for BLC Management location and

BellSouth location where the trunks shall terminate), interface type (e.g., DS1), Direction of Signaling, Trunk Group Number, if known, (commonly referred to as the 2-6 code) and forecasted trunks in service each year (cumulative).

5.7.2 Once initial interconnection trunk forecasts have been developed, BLC Management shall continue to provide interconnection trunk forecasts on a semiannual basis or at otherwise mutually agreeable intervals. BLC Management shall use its best efforts to make the forecasts as accurate as possible based on reasonable engineering criteria. The Parties shall continue to develop Reciprocal Trunk Group and/or two-way interconnection trunk forecasts as described in Section 5.7.1.1.

5.7.3 The submitting and development of interconnection trunk forecasts shall not replace the ordering process for local interconnection trunks. Each Party shall exercise its best efforts to provide the quantity of interconnection trunks mutually forecasted. However, the provision of the forecasted quantity of interconnection trunks is subject to trunk terminations and facility capacity existing at the time the trunk order is submitted. Furthermore, the receipt and development of trunk forecasts does not imply any liability for failure to perform if capacity (trunk terminations or facilities) is not available for use at the forecasted time.

5.8 **Trunk Utilization**

5.8.1 For the Reciprocal Trunk Groups that are Final Trunk Groups (Reciprocal Final Trunk Groups), BellSouth and BLC Management shall monitor traffic on each interconnection Reciprocal Final Trunk Group that is ordered and installed. The Parties agree that the Reciprocal Final Trunk Groups will be utilized at 60 percent (60%) of the time consistent busy hour utilization level within 90 days of installation. The Parties agree that the Reciprocal Final Trunk Groups will be utilized at eighty percent (80%) of the time consistent busy hour utilization level within 180 days of installation. Any Reciprocal Final Trunk Group not meeting the minimum thresholds set forth in this Section are defined as “Under-utilized” trunks. BellSouth may disconnect any Under-utilized Reciprocal Final Trunk Groups and BLC Management shall refund to BellSouth the associated nonrecurring and recurring trunk and facility charges paid by BellSouth, if any.

5.8.1.1 BellSouth’s CISC will notify BLC Management of any under-utilized Reciprocal Trunk Groups and the number of such trunk groups that BellSouth wishes to disconnect. BellSouth will provide supporting information either by email or facsimile to the designated BLC Management interface. BLC Management will provide concurrence with the disconnection in seven (7) business days or will provide specific information supporting why the trunks should not be disconnected. Such supporting information should include expected traffic volumes (including traffic volumes generated due to Local Number Portability) and the timeframes within which BLC Management expects to need such trunks. BellSouth’s CISC Project Manager and Circuit Capacity Manager will discuss the

information with BLC Management to determine if agreement can be reached on the number of Reciprocal Final Trunk Groups to be removed. If no agreement can be reached, BellSouth will issue disconnect orders to BLC Management. The due date of these orders will be four weeks after BLC Management was first notified in writing of the underutilization of the trunk groups.

5.8.2 To the extent that any interconnection trunk group is utilized at a time-consistent busy hour of eighty percent (80%) or greater, the Parties may review the trunk groups and, if necessary, shall negotiate in good faith for the installation of augmented facilities.

5.8.3 For the two-way trunk groups, BellSouth and BLC Management shall monitor traffic on each interconnection trunk group that is ordered and installed. The Parties agree that within 90 days of the installation of the BellSouth two-way trunk or trunks, the trunks will be utilized at 60 percent (60%) of the time consistent busy hour utilization level. The Parties agree that within 180 days of the installation of a trunk or trunks, the trunks will be utilized at eighty percent (80%) of the time consistent busy hour utilization level. Any trunk or trunks not meeting the minimum thresholds set forth in this Section are defined as "Under-utilized" trunks. BellSouth will request the disconnection of any Under-utilized two-way trunk(s) and BLC Management shall refund to BellSouth the associated nonrecurring and recurring trunk and facility charges paid by BellSouth, if any.

5.8.3.1 BellSouth's LISC will notify BLC Management of any under-utilized two-way trunk groups and the number of trunks that BellSouth wishes to disconnect. BellSouth will provide supporting information either by email or facsimile to the designated BLC Management interface. BLC Management will provide concurrence with the disconnection in seven (7) business days or will provide specific information supporting why the two-way trunks should not be disconnected. Such supporting information should include expected traffic volumes (including traffic volumes generated due to Local Number Portability) and the timeframes within which BLC Management expects to need such trunks. BellSouth's CISC Project Manager and Circuit Capacity Manager will discuss the information with BLC Management to determine if agreement can be reached on the number of trunks to be removed. If no agreement can be reached, BLC Management will issue disconnect orders to BellSouth. The due date of these orders will be four weeks after BLC Management was first notified in writing of the underutilization of the trunk groups.

5.8.3.2 To the extent that any interconnection trunk group is utilized at a time-consistent busy hour of eighty percent (80%) or greater, the Parties may review the trunk groups and, if necessary, shall negotiate in good faith for the installation of augmented facilities.

6. LOCAL DIALING PARITY

6.1 BellSouth and BLC Management shall provide local and toll dialing parity, as defined in FCC rules and regulations, with no unreasonable dialing delays. Dialing parity shall be provided for all originating telecommunications services that require dialing to route a call.

7. INTERCONNECTION COMPENSATION

7.1 Compensation for Call Transportation and Termination for Local Traffic, ISP-bound Traffic and IntraLATA Toll Traffic

7.1.1 For the purposes of this Attachment and for reciprocal compensation between the Parties pursuant to this Attachment, Local Traffic is defined as any telephone call that originates in one exchange and terminates in either the same exchange, or other local calling area associated with the originating exchange as defined and specified in Section A3 of BellSouth's General Subscriber Service Tariff.

7.1.1.1 Additionally, Local Traffic includes any cross boundary, voice-to-voice intrastate, interLATA or interstate, interLATA calls established as a local call by the ruling regulatory body.

7.1.2 ISP-bound Traffic is defined as calls to an information service provider or Internet service provider (ISP) that are dialed by using a local dialing pattern (7 or 10 digits) by a calling party in one exchange to an ISP server or modem in either the same exchange or a corresponding Extended Area Service (EAS) exchange as defined and specified in Section A3 of BellSouth's General Subscriber Service tariff. ISP-bound Traffic is not Local Traffic subject to reciprocal compensation, but instead is information access traffic subject to the FCC's jurisdiction.

7.1.3 Notwithstanding the definitions of Local Traffic and ISP-bound traffic above, and pursuant to the FCC's Order on Remand and Report and Order in CC Docket 99-68 released April 27, 2001 (ISP Order on Remand), BellSouth and BLC Management agree to the rebuttable presumption that all combined circuit switched Local and ISP-bound Traffic delivered to BellSouth or BLC Management that exceeds a 3:1 ratio of terminating to originating traffic on a statewide basis shall be considered ISP-bound traffic for compensation purposes. BellSouth and BLC Management further agree to the rebuttable presumption that all combined circuit switched Local and ISP-bound Traffic delivered to BellSouth or BLC Management that does not exceed a 3:1 ratio of terminating to originating traffic on a statewide basis shall be considered Local Traffic for compensation purposes.

7.1.4 Neither Party shall pay compensation to the other Party for per minute of use rate elements associated with the Call Transport and Termination of Local Traffic or ISP-bound Traffic.

7.1.5 The appropriate elemental rates set forth in Exhibit A of this Attachment shall apply for Transit Traffic as described in Sections 7.6 and 7.6.1 below and to Multiple Tandem Access as described in Section 4.10.1.5 above.

7.1.6 Neither Party shall represent Switched Access Traffic as Local Traffic or ISP-bound Traffic for purposes of determining compensation for the call.

7.1.7 IntraLATA Toll Traffic is defined as all traffic that originates and terminates within a single LATA that is not Local or ISP-bound traffic under this Attachment.

7.1.7.1 For terminating its intraLATA toll traffic on the other company's network, the originating Party will pay the terminating Party BellSouth's current intrastate or interstate, whichever is appropriate, terminating switched access tariff rates as set forth in BellSouth's Access Services Tariffs as filed and in effect with the FCC or Commission. The appropriate charges will be determined by the routing of the call. Additionally, if one Party is the other Party's End User's presubscribed interexchange carrier or if one Party's End User uses the other Party as an interexchange carrier on a 101XXXX basis, the originating party will charge the other Party the appropriate BellSouth originating switched access tariff rates as set forth in BellSouth's Intrastate or Interstate Access Services Tariff as filed and in effect with the FCC or appropriate Commission.

7.1.8 If BLC Management assigns NPA/NXXs to specific BellSouth rate centers within the LATA and assigns numbers from those NPA/NXXs to BLC Management End Users physically located outside of that LATA, BellSouth traffic originating from within the LATA where the NPA/NXXs are assigned and delivered to a BLC Management customer physically located outside of such LATA, shall not be deemed Local Traffic. Further, BLC Management agrees to identify such interLATA traffic to BellSouth and to compensate BellSouth for originating and transporting such interLATA traffic to BLC Management at BellSouth's switched access tariff rates.

7.2 If BLC Management does not identify such interLATA traffic to BellSouth, to the best of BellSouth's ability BellSouth will determine which whole BLC Management NPA/NXXs on which to charge the applicable rates for originating network access service as reflected in BellSouth's Access Service Tariff. BellSouth shall make appropriate billing adjustments if BLC Management can provide sufficient information for BellSouth to determine whether or not said traffic is Local or ISP-bound Traffic.

7.3 **Jurisdictional Reporting**

7.3.1 **Percent Local Use**. Each Party shall report to the other a Percent Local Usage (PLU) factor. The application of the PLU will determine the amount of local or ISP-bound minutes to be billed to the other Party. Each Party shall update its PLU on the first of January, April, July and October of the year and shall send it to the

other Party to be received no later than 30 days after the first of each such month based on local and ISP-bound usage for the past three months ending the last day of December, March, June and September, respectively. Requirements associated with PLU calculation and reporting shall be as set forth in BellSouth's Jurisdictional Factors Reporting Guide, as it is amended from time to time.

7.3.2 **Percent Local Facility**. Each Party shall report to the other a Percent Local Facility (PLF) factor. The application of the PLF will determine the portion of switched dedicated transport to be billed per the local jurisdiction rates. The PLF shall be applied to Multiplexing, Local Channel and Interoffice Channel Switched Dedicated Transport utilized in the provision of local interconnection trunks. Each Party shall update its PLF on the first of January, April, July and October of the year and shall send it to the other Party to be received no later than 30 days after the first of each such month to be effective the first bill period the following month, respectively. Requirements associated with PLU and PLF calculation and reporting shall be as set forth in BellSouth's Jurisdictional Factors Reporting Guide, as it is amended from time to time.

7.3.3 **Percent Interstate Usage**. Each Party shall report to the other the projected Percent Interstate Usage (PIU) factor. All jurisdictional report requirements, rules and regulations for Interexchange Carriers specified in BellSouth's Intrastate Access Services Tariff will apply to BLC Management. After interstate and intrastate traffic percentages have been determined by use of PIU procedures, the PLU and PLF factors will be used for application and billing of local interconnection. Each Party shall update its PIUs on the first of January, April, July and October of the year and shall send it to the other Party to be received no later than 30 days after the first of each such month, for all services showing the percentages of use for the past three months ending the last day of December, March, June and September.

7.3.4 Notwithstanding the provisions in Section 7.3.1, 7.3.2, and 7.3.3 above, where the terminating Party has message recording technology that identifies the jurisdiction of traffic terminated as defined in this Agreement, such information shall, at the terminating Party's option, be utilized to determine the appropriate jurisdictional reporting factors (PLU, PIU, and/or PLF), in lieu of those provided by the originating Party. In the event that the terminating Party opts to utilize its own data to determine jurisdictional reporting factors, such terminating Party shall notify the originating Party at least 15 days prior to the beginning of the calendar quarter in which the terminating Party will begin to utilize its own data. Such factors shall subject to the Dispute Resolution provisions in this Agreement, as well as the Audit provisions set forth in 7.3.5 below.

7.3.5 **Audits.** On thirty (30) days written notice, each Party must provide the other the ability and opportunity to conduct an annual audit to ensure the proper billing of traffic. BellSouth and BLC Management shall retain records of call detail for a

minimum of nine months from which the PLU, PLF and/or PIU can be ascertained. The audit shall be conducted during normal business hours at an office designated by the Party being audited. Audit requests shall not be submitted more frequently than one (1) time per calendar year. Audits shall be performed by a mutually acceptable independent auditor paid for by the Party requesting the audit. The PLF, PLU and/or PIU shall be adjusted based upon the audit results and shall apply for the quarter the audit was completed, for the quarter prior to the completion of the audit, and for the two quarters following the completion of the audit. If, as a result of an audit, either Party is found to have overstated the PLF, PLU and/or PIU by twenty percentage points (20%) or more, that Party shall reimburse the auditing Party for the cost of the audit.

7.4 **Compensation for 8XX Traffic**

7.4.1 Compensation for 8XX Traffic. Each Party shall pay the other the appropriate switched access charges set forth in the BellSouth intrastate or interstate switched access tariffs. BLC Management will pay BellSouth the database query charge as set forth in the BellSouth intrastate or interstate switched access tariffs as applicable.

7.4.2 Records for 8XX Billing. Each Party will provide to the other the appropriate records necessary for billing intraLATA 8XX customers. The records provided will be in a standard EMI format.

7.4.3 8XX Access Screening. BellSouth's provision of 8XX Toll Free Dialing (TFD) to BLC Management requires interconnection from BLC Management to BellSouth's 8XX Signal Channel Point (SCP). Such interconnections shall be established pursuant to BellSouth's Common Channel Signaling Interconnection Guidelines and Telcordia's CCS Network Interface Specification document, TR-TSV-000905. BLC Management shall establish SS7 interconnection at the BellSouth Local Signal Transfer Points serving the BellSouth 8XX SCPs that BLC Management desires to query. The terms and conditions for 8XX TFD are set out in BellSouth's Intrastate Access Services Tariff.

7.5 **Mutual Provision of Switched Access Service**

7.5.1 Switched Access Traffic. Switched Access Traffic is described as telephone calls requiring local transmission or switching services for the purpose of the origination or termination of Telephone Toll Service. Switched Access Traffic includes, but is not limited to, the following types of traffic: Feature Group A, Feature Group B, Feature Group C, Feature Group D, toll free access (e.g., 8XX), 900 access and their successors. Additionally, any Public Switched Telephone Network interexchange telecommunications traffic, regardless of transport protocol method, where the originating and terminating points, end-to-end points, are in different LATAs, or are in the same LATA and the Parties' Switched Access services are used for the origination or termination of the call, shall be considered Switched

Access Traffic. Irrespective of transport protocol method used, a call which originates in one LATA and terminates in another LATA (i.e., the end-to-end points of the call) or in which the Parties' Switched Access Services are used for the origination or termination of the call, shall not be considered Local Traffic or ISP-bound Traffic.

7.5.2 If the BellSouth End User chooses BLC Management as their presubscribed interexchange carrier, or if the BellSouth End User uses BLC Management as an interexchange carrier on a 101XXXX basis, BellSouth will charge BLC Management the appropriate BellSouth tariff charges for originating switched access services.

7.5.3 Where the originating Party delivers a call to the terminating Party over switched access facilities, the originating Party will pay the terminating Party terminating, switched access charges as set forth in BellSouth's Intrastate or Interstate Access Services Tariff, as appropriate.

7.5.4 When BLC Management's end office switch provides an access service connection to or from an interexchange carrier (IXC) by a direct trunk group to the IXC utilizing BellSouth facilities, each Party will provide its own access services to the IXC and bill on a multi-bill, multi-tariff meet-point basis. Each Party will bill its own access services rates to the IXC with the exception of the interconnection charge. The interconnection charge will be billed by BLC Management as the Party providing the end office function. Each party will use the Multiple Exchange Carrier Access Billing (MECAB) guidelines to establish meet point billing for all applicable traffic. The Parties shall utilize a thirty (30) day billing period.

7.5.4.1 When BLC Management's end office subtends the BellSouth Access Tandem switch for receipt or delivery of switched access traffic and provides an access service connection to or from an IXC via BellSouth's Access Tandem switch, BellSouth, as the tandem company agrees to provide to BLC Management, as the End Office Company, as defined in MECAB, at no charge, all the switched access detail usage data, recorded at the access tandem, within no more than sixty (60) days after the recording date. Each Party will notify the other when it is not feasible to meet these requirements. As business requirements change, data reporting requirements may be modified as necessary.

7.5.5 BellSouth, as the tandem provider company, will retain for a minimum period of sixty (60) days, access message detail sufficient to recreate any data that is lost or damaged by the tandem provider company or any third party involved in processing or transporting data.

7.5.6 BellSouth, as the tandem provider company, agrees to recreate the lost or damaged data within forty-eight (48) hours of notification by the other or by an authorized third party handling the data.

7.5.7 Any claims against BellSouth, as the tandem provider company, for unbillable or uncollectible revenue should be filed with the tandem provider company within 120 days of the usage date.

7.5.8 BellSouth, as the tandem provider company shall keep records of its billing activities relating to jointly-provided Intrastate and Interstate access services in sufficient detail to permit the Subsequent Billing Party to, by formal or informal review or audit, to verify the accuracy and reasonableness of the jointly-provided access billing data provided by the Initial Billing Party. Each Party agrees to cooperate in such formal or informal reviews or audits and further agrees to jointly review the findings of such reviews or audits in order to resolve any differences concerning the findings thereof.

7.5.9 BLC Management agrees not to deliver switched access traffic to BellSouth for termination except over BLC Management ordered switched access trunks and facilities.

7.6 **Transit Traffic**

7.6.1 BellSouth shall provide tandem switching and transport services for BLC Management's Transit Traffic. Rates for local Transit Traffic and ISP-bound Transit Traffic shall be the applicable Call Transport and Termination charges as set forth in Exhibit A to this Attachment. Rates for Switched Access Transit Traffic shall be the applicable charges as set forth in BellSouth Interstate or Intrastate Switched Access tariffs. Billing associated with all Transit Traffic shall be pursuant to MECAB guidelines. Traffic between BLC Management and Wireless Type 1 third parties shall not be treated as Transit Traffic from a routing or billing perspective. Traffic between BLC Management and Wireless Type 2A or a third party CLEC utilizing BellSouth switching shall not be treated as Transit Traffic from a routing or billing perspective until BellSouth and the Wireless carrier or a third party CLEC utilizing BellSouth switching have the capability to properly meet-point-bill in accordance with MECAB guidelines.

7.6.2 The delivery of traffic that transits the BellSouth network and is transported to another carrier's network is excluded from any BellSouth billing guarantees. BellSouth agrees to deliver Transit Traffic to the terminating carrier; provided, however, that BLC Management is solely responsible for negotiating and executing any appropriate contractual agreements with the terminating carrier for the exchange of Transit Traffic through the BellSouth network. BellSouth will not be liable for any compensation to the terminating carrier or to BLC Management. In the event that the terminating third party carrier imposes on BellSouth any charges or costs for the delivery of Transit Traffic, BLC Management shall reimburse BellSouth for such costs. Additionally, the Parties agree that any billing to a third party or other telecommunications carrier under this section shall be pursuant to MECAB procedures.

8. FRAME RELAY SERVICE INTERCONNECTION

8.1 In addition to the Local Interconnection services set forth above, BellSouth will offer a network to network Interconnection arrangement between BellSouth's and BLC Management's frame relay switches as set forth below. The following provisions will apply only to Frame Relay Service and Exchange Access Frame Relay Service and Managed Shared Frame Relay Service in those states in which BLC Management is certified and providing Frame Relay Service as a Local Exchange Carrier and where traffic is being exchanged between BLC Management and BellSouth Frame Relay Switches in the same LATA.

8.2 The Parties agree to establish two-way Frame Relay facilities between their respective Frame Relay Switches to the mutually agreed upon Frame Relay Service point(s) of interconnection (IP(s)) within the LATA. All IPs shall be within the same Frame Relay Network Serving Areas as defined in Section A40 of BellSouth's General Subscriber Service Tariff except as set forth in this Attachment.

8.3 Upon the request of either Party, such interconnection will be established where BellSouth and BLC Management have Frame Relay Switches in the same LATA. Where there are multiple Frame Relay switches in one central office, an interconnection with any one of the switches will be considered an interconnection with all of the switches at that central office for purposes of routing packet traffic.

8.4 The Parties agree to provision local and intraLATA Frame Relay Service and Exchange Access Frame Relay Service and Managed Shared Frame Relay Service (both intrastate and interstate) over Frame Relay interconnection facilities between the respective Frame Relay switches and the IPs.

8.5 The Parties agree to assess each other reciprocal charges for the facilities that each provides to the other according to the Percent Local Circuit Use Factor (PLCU), determined as follows:

8.5.1 If the data packets originate and terminate in locations in the same LATA, and are consistent with the local definitions of the Agreement, the traffic is considered local. Frame Relay framed packet data is transported within Virtual Circuits (VC). For the purposes of this Agreement, if all the data packets transported within a VC remain within the LATA, then consistent with the local definitions in this Agreement, the traffic on that VC is local (Local VC).

8.5.2 If the originating and terminating locations of the two-way packet data traffic are not in the same LATA, the traffic on that VC is interLATA (InterLATA VC).

8.5.3 The PLCU is determined by dividing the total number of Local VCs, by the total number of VCs on each Frame Relay facility. To facilitate implementation, BLC Management may determine its PLCU in aggregate, by dividing the total number

of Local VCs in a given LATA by the total number VCs in that LATA. The Parties agree to renegotiate the method for determining PLCU, at BellSouth's request, and within 90 days, if BellSouth notifies BLC Management that it has found that this method does not adequately represent the PLCU.

8.5.4 If there are no VCs on a facility when it is billed, the PLCU will be zero.

8.5.5 BellSouth will provide the circuit between the Parties' respective Frame Relay Switches. The Parties will be compensated as follows: BellSouth will invoice, and BLC Management will pay, the total nonrecurring and recurring charges for the circuit based upon the rates set forth in BellSouth's Interstate Access Tariff, FCC No. 1. BLC Management will then invoice, and BellSouth will pay, an amount calculated by multiplying the BellSouth billed charges for the circuit by one-half of BLC Management's PLCU.

8.6 The Parties agree to compensate each other for Frame Relay network-to-network interface (NNI) ports based upon the NNI rates set forth in BellSouth's Interstate Access Tariff, FCC No. 1. Compensation for each pair of NNI ports will be calculated as follows: BellSouth will invoice, and BLC Management will pay, the total nonrecurring and recurring charges for the NNI port. BLC Management will then invoice, and BellSouth will pay, an amount calculated by multiplying the BellSouth billed nonrecurring and recurring charges for the NNI port by BLC Management's PLCU.

8.7 Each Party agrees that there will be no charges to the other Party for its own subscriber's Permanent Virtual Circuit (PVC) rate elements for the local PVC segment from its Frame Relay switch to its own subscriber's premises. PVC rate elements include the Data Link Connection Identifier (DLCI) and Committed Information Rate (CIR).

8.8 For the PVC segment between the BLC Management and BellSouth Frame Relay switches, compensation for the PVC charges is based upon the rates in BellSouth's Interstate Access Tariff, FCC No. 1.

8.9 Compensation for PVC rate elements will be calculated as follows:

8.9.1 If BLC Management orders a VC connection between a BellSouth subscriber's PVC segment and a PVC segment from the BellSouth Frame Relay switch to the BLC Management Frame Relay switch, BellSouth will invoice, and BLC Management will pay, the total nonrecurring and recurring PVC charges for the PVC segment between the BellSouth and BLC Management Frame Relay switches. If the VC is a Local VC, BLC Management will then invoice and BellSouth will pay, the total nonrecurring and recurring PVC charges billed for that segment. If the VC is not local, no compensation will be paid to BLC Management for the PVC segment.

8.9.2 If BellSouth orders a Local VC connection between a BLC Management subscriber's PVC segment and a PVC segment from the BLC Management Frame Relay switch to the BellSouth Frame Relay switch, BellSouth will invoice, and BLC Management will pay, the total nonrecurring and recurring PVC and CIR charges for the PVC segment between the BellSouth and BLC Management Frame Relay switches. If the VC is a Local VC, BLC Management will then invoice and BellSouth will pay the total nonrecurring and recurring PVC and CIR charges billed for that segment. If the VC is not local, no compensation will be paid to BLC Management for the PVC segment.

8.9.3 The Parties agree to compensate each other for requests to change a PVC segment or PVC service order record, according to the Feature Change charge as set forth in the BellSouth access tariff BellSouth Tariff FCC No. 1.

8.9.4 If BLC Management requests a change, BellSouth will invoice and BLC Management will pay a Feature Change charge for each affected PVC segment.

8.9.4.1 If BellSouth requests a change to a Local VC, BLC Management will invoice and BellSouth will pay a Feature Change charge for each affected PVC segment.

8.9.5 The Parties agree to limit the sum of the CIR for the VCs on a DS1 NNI port to not more than three times the port speed, or not more than six times the port speed on a DS3 NNI port.

8.9.6 Except as expressly provided herein, this Agreement does not address or alter in any way either Party's provision of Exchange Access Frame Relay Service, Managed Shared Frame Relay Service or interLATA Frame Relay Service. All charges by each Party to the other for carriage of Exchange Access Frame Relay Service or interLATA Frame Relay Service are included in the BellSouth access tariff BellSouth Tariff FCC No. 1.

8.10 BLC Management will identify and report quarterly to BellSouth the PLCU of the Frame Relay facilities it uses, per Section 8.5.3 above.

8.11 Either Party may request a review or audit of the various service components, consistent with the provisions of section E2 of the BellSouth State Access Services tariffs or Section 2 of the BellSouth FCC No.1 Tariff.

9. ORDERING CHARGES

9.1 The terms, conditions and rates for Ordering Charges are as set forth in FCC Tariff for Access Service Records.

10 BASIC 911 AND E911 INTERCONNECTION

10.1 Basic 911 and E911 provides a caller access to the applicable emergency service bureau by dialing 911.

10.2 Basic 911 Interconnection. BellSouth will provide to BLC Management a list consisting of each municipality that subscribes to Basic 911 service. The list will also provide, if known, the E911 conversion date for each municipality and, for network routing purposes, a ten-digit directory number representing the appropriate emergency answering position for each municipality subscribing to 911. BLC Management will be required to arrange to accept 911 calls from its end users in municipalities that subscribe to Basic 911 service and translate the 911 call to the appropriate 10-digit directory number as stated on the list provided by BellSouth. BLC Management will be required to route that call to BellSouth at the appropriate 911 tandem. When a municipality converts to E911 service, BLC Management will be required to begin using E911 procedures.

10.3 E911 Interconnection. BLC Management shall install a minimum of two dedicated trunks originating from its Serving Wire Center and terminating to the appropriate E911 tandem. The Serving Wire Center must be in the same LATA as the E911 tandem. The dedicated trunks shall be, at a minimum, DS0 level trunks configured as part of a digital (1.544 Mb/s) interface (DS1 facility). The configuration shall use CAMA-type signaling with multifrequency (MF) pulsing that will deliver ANI with the voice portion of the call. If the user interface is digital, MF pulses as well as other AC signals shall be encoded per the u-255 Law convention. BLC Management will be required to provide BellSouth daily updates to the E911 database. BLC Management will be required to forward 911 calls to the appropriate E911 tandem along with ANI based upon the current E911 end office to tandem homing arrangement as provided by BellSouth. If the E911 tandem trunks are not available, BLC Management will be required to route the call to a designated 7-digit or 10-digit local number residing in the appropriate Public Service Answering Point (PSAP). This call will be transported over BellSouth's interoffice network and will not carry the ANI of the calling party. BLC Management shall be responsible for providing BellSouth with complete and accurate data for submission to the 911/E911 database for the purpose of providing 911/E911 to its end users.

10.4 Rates. BellSouth will impose applicable charges on BLC Management for BellSouth trunking arrangements. Rates for trunking arrangements are as set forth in Exhibit A of this Attachment. In addition BLC Management will be responsible for charges for the facilities that the E911 trunks will ride. Facility rates are as set forth in the access tariff.

10.5 The detailed practices and procedures for 911/E911 interconnection are contained in the E911 Local Exchange Carrier Guide For Facility-Based Providers as amended from time to time during the term of this Agreement.

Exhibit B

Basic Architecture

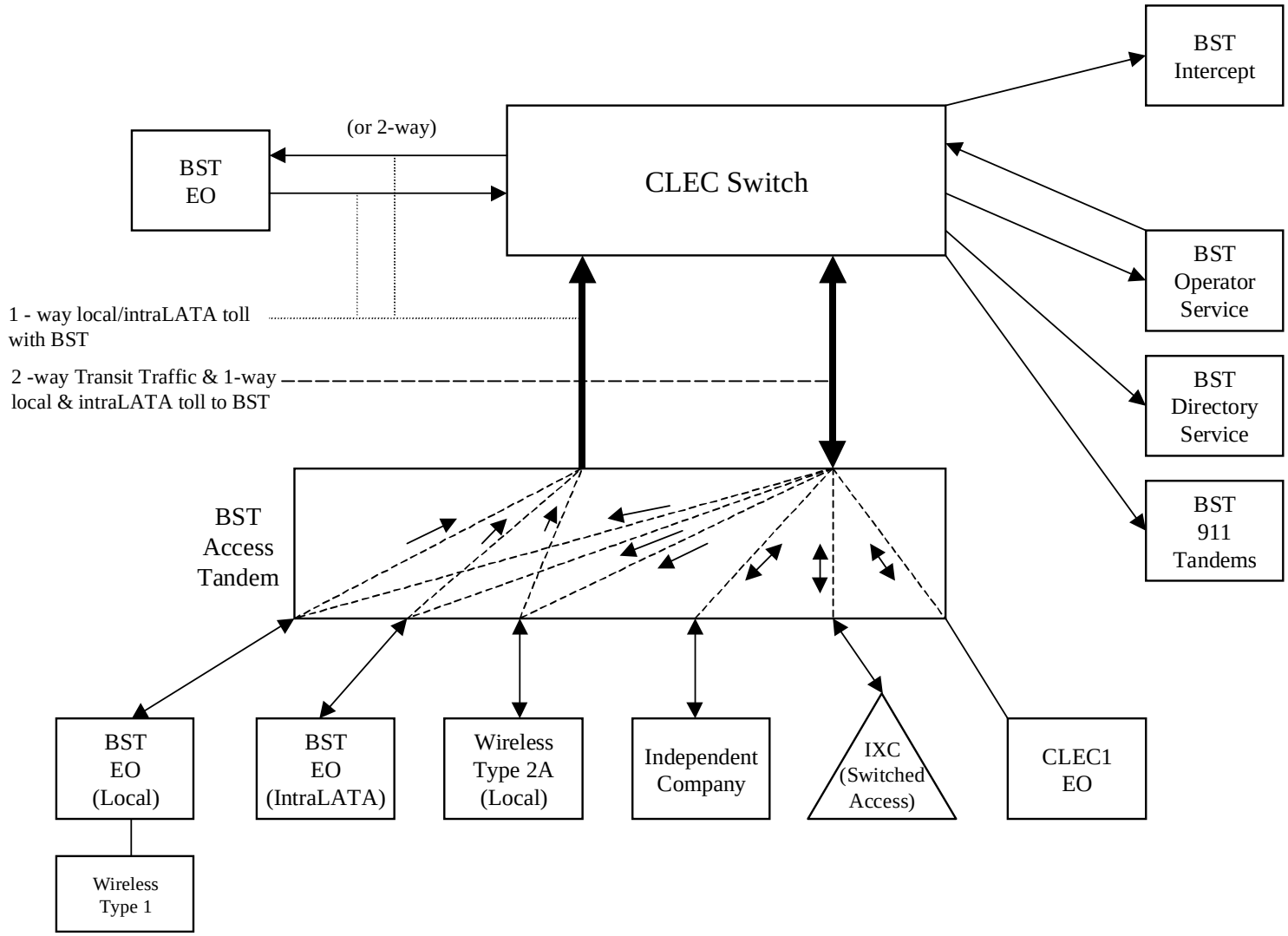

Exhibit C

One-Way Architecture

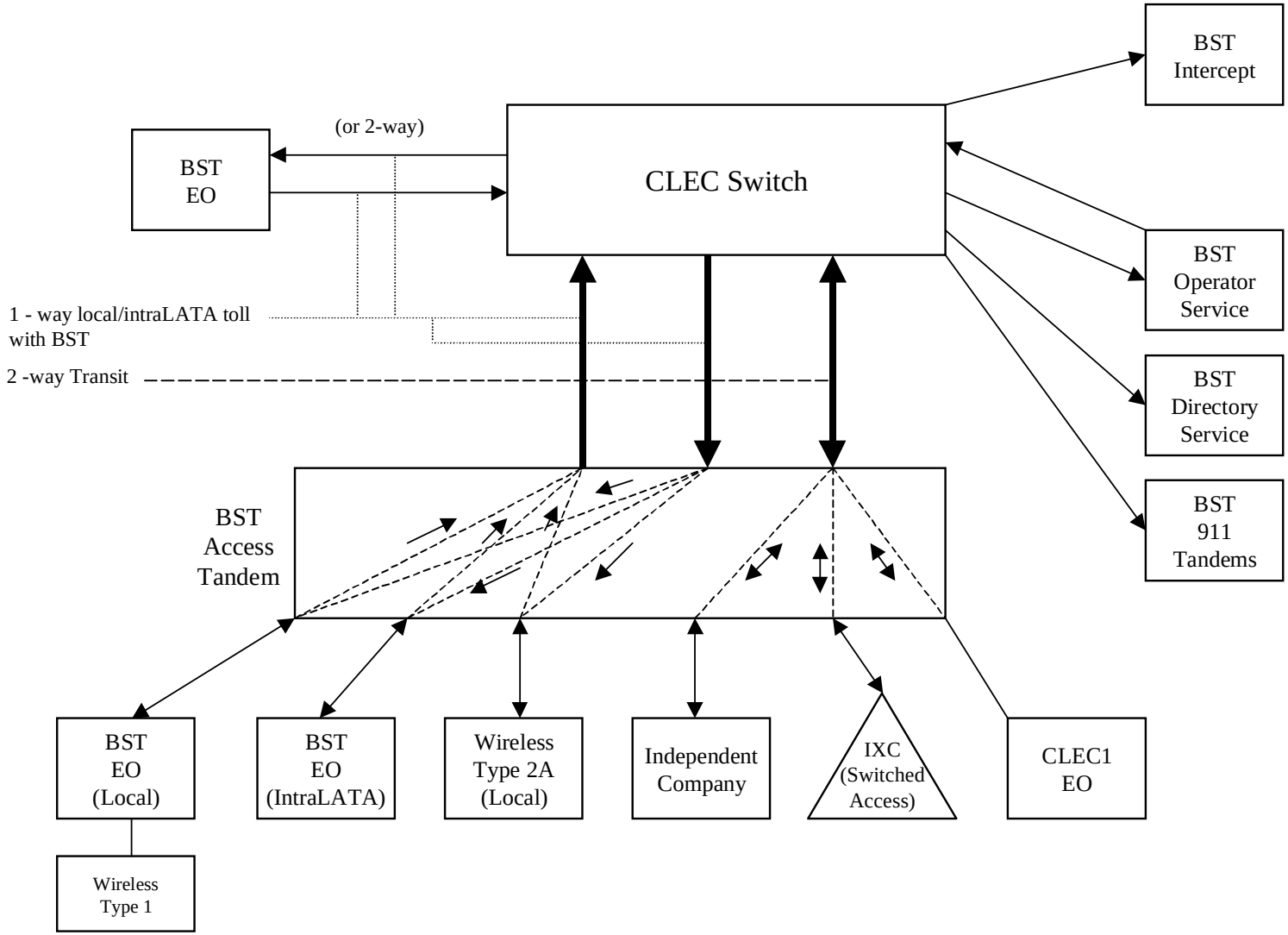

Exhibit D

Two-Way Architecture

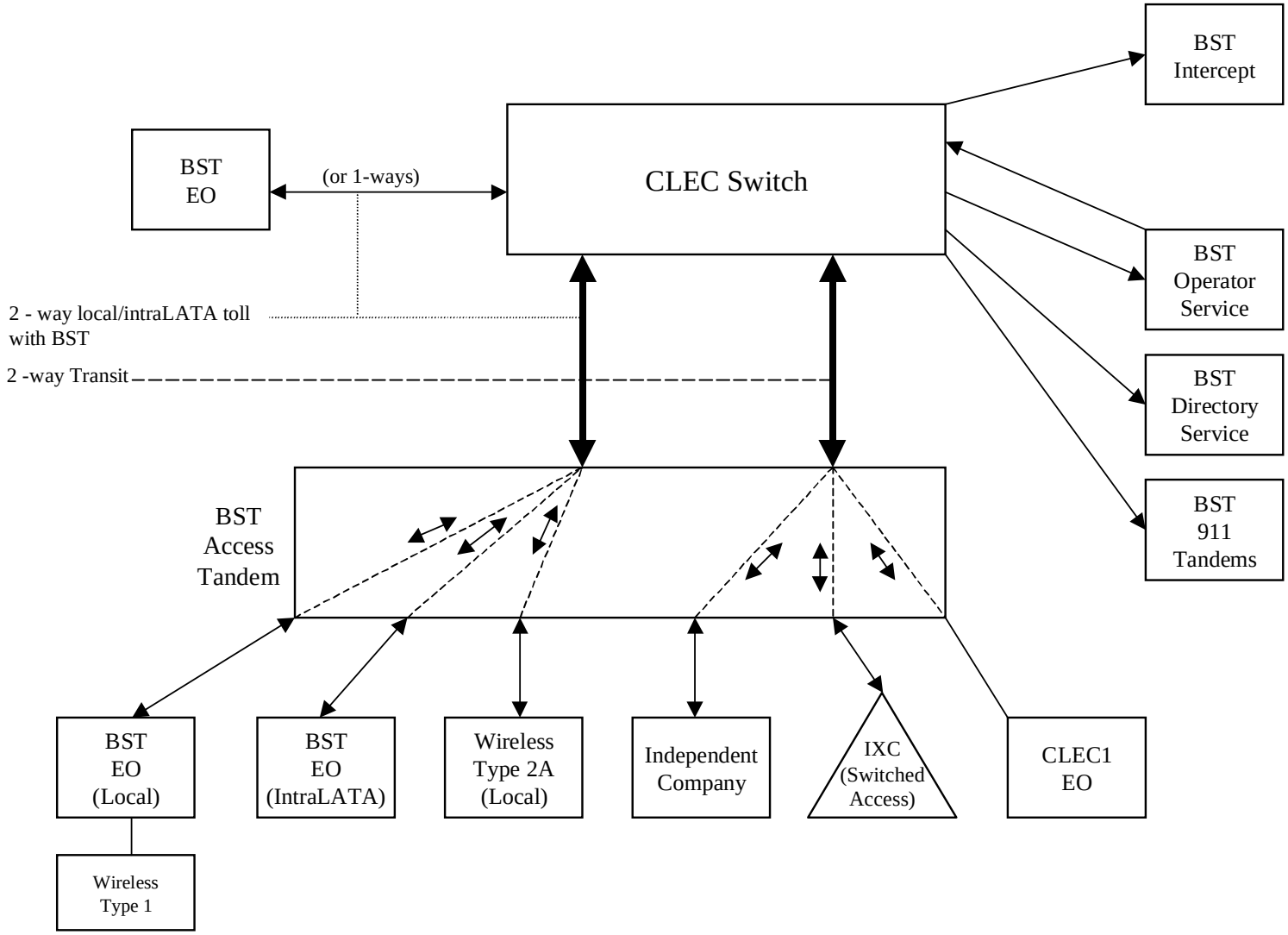

Exhibit E

Supergroup Architecture

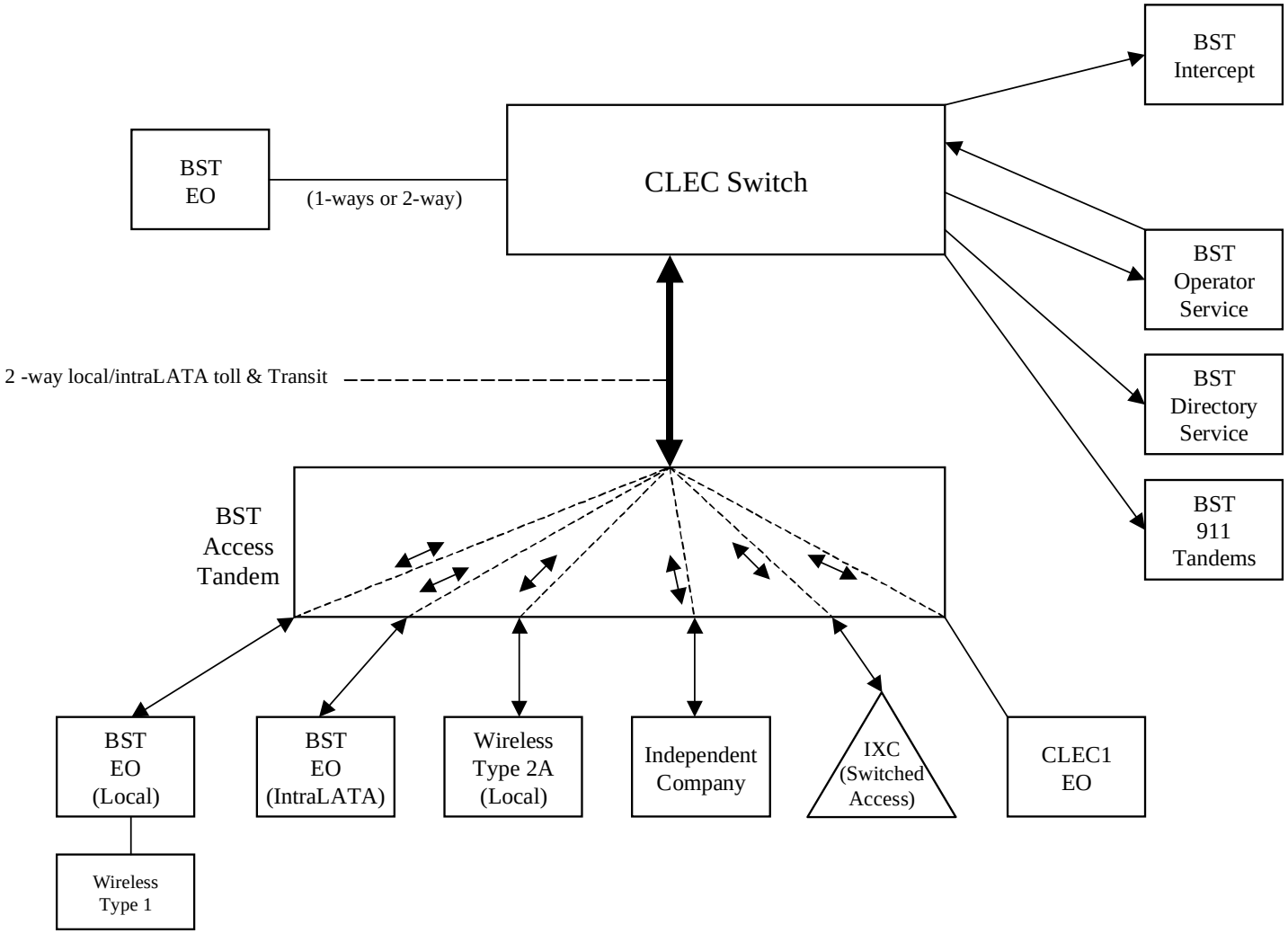

LOCAL INTERCONNECTION - Alabama														Attachment: 3		Exhibit: A	
CATEGORY	RATE ELEMENTS	Interim	Zone	BCS	USOC	RATES ($)					Svc Order Submitted Elec per LSR	Svc Order Submitted Manually per LSR	Incremental Charge - Manual Svc Order vs. Electronic-1st	Incremental Charge - Manual Svc Order vs. Electronic-Add'l	Incremental Charge - Manual Svc Order vs. Electronic-Disc 1st	Incremental Charge - Manual Svc Order vs. Electronic-Disc Add'l
						Rec	Nonrecurring		Nonrecurring Disconnect		OSS Rates ($)					
							First	Add'l	First	Add'l	SOMEC	SOMAN	SOMAN	SOMAN	SOMAN	SOMAN
LOCAL INTERCONNECTION (CALL TRANSPORT AND TERMINATION)																
NOTE: "bk" beside a rate indicates that the Parties have agreed to bill and keep for that element pursuant to the terms and conditions in Attachment 3.																
TANDEM SWITCHING																
	Tandem Switching Function Per MOU			OHD		0.0004980bk										
	Multiple Tandem Switching, per MOU (applies to intial tandem only)			OHD		0.000498										
	Tandem Intermediary Charge, per MOU*			OHD		0.0025										
*** This charge is applicable only to transit traffic and is applied in addition to applicable switching and/or interconnection charges.**																
TRUNK CHARGE																
	Installation Trunk Side Service - per DS0			OHD	TPP6X		21.56	8.12								
	Installation Trunk Side Service - per DS0			OHD	TPP9X		21.56	8.12								
	Dedicated End Office Trunk Port Service-per DS0**			OHD	TDEOP	0.00										
	Dedicated End Office Trunk Port Service-per DS1**			OH1 OH1MS	TDE1P	0.00										
	Dedicated Tandem Trunk Port Service-per DS0**			OHD	TDWOP	0.00										
	Dedicated Tandem Trunk Port Service-per DS1**			OH1 OH1MS	TDW1P	0.00										
**** This rate element is recovered on a per MOU basis and is included in the End Office Switching and Tandem Switching, per MOU rate elements**																
COMMON TRANSPORT (Shared)																
	Common Transport - Per Mile, Per MOU			OHD		0.0000023bk										
	Common Transport - Facilities Termination Per MOU			OHD		0.0003224bk										
LOCAL INTERCONNECTION (DEDICATED TRANSPORT)																
INTEROFFICE CHANNEL - DEDICATED TRANSPORT																
	Interoffice Channel - Dedicated Transport - 2-Wire Voice Grade - Per Mile per month			OHM	1L5NF	0.008838										
	Interoffice Channel - Dedicated Transport- 2- Wire Voice Grade - Facility Termination per month			OHM	1L5NF	21.13	40.54	27.41	16.74	6.90						
	Interoffice Channel - Dedicated Transport - 56 kbps - per mile per month			OHM	1L5NK	0.008838										
	Interoffice Channel - Dedicated Transport - 56 kbps - Facility Termination per month			OHM	1L5NK	15.12	40.54	27.41	16.74	6.90						
	Interoffice Channel - Dedicated Transport - 64 kbps - per mile per month			OHM	1L5NK	0.008838										
	Interoffice Channel - Dedicated Transport - 64 kbps - Facility Termination per month			OHM	1L5NK	15.12	40.54	27.41	16.74	6.90						
	Interoffice Channel - Dedicated Channel - DS1 - Per Mile per month			OH1, OH1MS	1L5NL	0.18										
	Interoffice Channel - Dedicated Tranport - DS1 - Facility Termination per month			OH1, OH1MS	1L5NL	60.16	89.27	81.81	16.35	14.44						
	Interoffice Channel - Dedicated Transport - DS3 - Per Mile per month			OH3, OH3MS	1L5NM	4.09										
	Interoffice Channel - Dedicated Transport - DS3 - Facility Termination per month			OH3, OH3MS	1L5NM	703.52	278.75	162.76	60.20	58.46						
LOCAL CHANNEL - DEDICATED TRANSPORT																
	Local Channel - Dedicated - 2-Wire Voice Grade per month			OHM	TEFV2	13.97	193.10	33.17	36.64	3.20						
	Local Channel - Dedicated - 4-Wire Voice Grade per month			OHM	TEFV4	14.93	193.53	33.60	37.11	3.67						
	Local Channel - Dedicated - DS1 per month			OH1	TEFHG	35.76	177.47	153.72	22.19	15.26						
	Local Channel - Dedicated - DS3 Facility Termination per month			OH3	TEFHJ	416.54	451.52	263.94	119.49	83.58						
LOCAL INTERCONNECTION MID-SPAN MEET																
NOTE: If Access service ride Mid-Span Meet, one-half the tariffed service Local Channel rate is applicable.																
	Local Channel - Dedicated - DS1 per month			OH1MS	TEFHG	0.00	0.00									
	Local Channel - Dedicated - DS3 per month			OH3MS	TEFHJ	0.00	0.00									
MULTIPLEXERS																
	Channelization - DS1 to DS0 Channel System			OH1, OH1MS	SATN1	101.06	91.04	62.57	10.54	9.79						
	DS3 to DS1 Channel System per month			OH3, OH3MS	SATNS	166.13	178.14	93.97	33.26	31.63						
	DS3 Interface Unit (DS1 COCI) per month			OH1, OH1MS	SATCO	12.70	6.58	4.72								
Notes: If no rate is identified in the contract, the rates, terms, and conditions for the specific service or function will be as set forth in applicable BellSouth tariff.																

LOCAL INTERCONNECTION - Florida														Attachment: 3		Exhibit: A	
CATEGORY	RATE ELEMENTS	Interim	Zone	BCS	USOC	RATES ($)					Svc Order Submitted Elec per LSR	Svc Order Submitted Manually per LSR	Incremental Charge - Manual Svc Order vs. Electronic-1st	Incremental Charge - Manual Svc Order vs. Electronic-Add'l	Incremental Charge - Manual Svc Order vs. Electronic-Disc 1st	Incremental Charge - Manual Svc Order vs. Electronic-Disc Add'l
						Rec	Nonrecurring		Nonrecurring Disconnect		OSS Rates ($)					
							First	Add'l	First	Add'l	SOMEC	SOMAN	SOMAN	SOMAN	SOMAN	SOMAN
LOCAL INTERCONNECTION (CALL TRANSPORT AND TERMINATION)																
NOTE: "bk" beside a rate indicates that the Parties have agreed to bill and keep for that element pursuant to the terms and conditions in Attachment 3.																
TANDEM SWITCHING																
	Tandem Switching Function Per MOU			OHD		0.0006019bk										
	Multiple Tandem Switching, per MOU (applies to intial tandem only)			OHD		0.0006019										
	Tandem Intermediary Charge, per MOU*			OHD		0.0025										
*** This charge is applicable only to transit traffic and is applied in addition to applicable switching and/or interconnection charges.**																
TRUNK CHARGE																
	Installation Trunk Side Service - per DS0			OHD	TPP6X		21.73	8.19								
	Installation Trunk Side Service - per DS0			OHD	TPP9X		21.73	8.19								
	Dedicated End Office Trunk Port Service-per DS0**			OHD	TDEOP	0.00										
	Dedicated End Office Trunk Port Service-per DS1**			OH1 OH1MS	TDE1P	0.00										
	Dedicated Tandem Trunk Port Service-per DS0**			OHD	TDWOP	0.00										
	Dedicated Tandem Trunk Port Service-per DS1**			OH1 OH1MS	TDW1P	0.00										
**** This rate element is recovered on a per MOU basis and is included in the End Office Switching and Tandem Switching, per MOU rate elements**																
COMMON TRANSPORT (Shared)																
	Common Transport - Per Mile, Per MOU			OHD		0.0000035bk										
	Common Transport - Facilities Termination Per MOU			OHD		0.0004372bk										
LOCAL INTERCONNECTION (DEDICATED TRANSPORT)																
INTEROFFICE CHANNEL - DEDICATED TRANSPORT																
	Interoffice Channel - Dedicated Transport - 2-Wire Voice Grade - Per Mile per month			OHM	1L5NF	0.0091										
	Interoffice Channel - Dedicated Transport- 2- Wire Voice Grade - Facility Termination per month			OHM	1L5NF	25.32	47.35	31.78	18.31	7.03						
	Interoffice Channel - Dedicated Transport - 56 kbps - per mile per month			OHM	1L5NK	0.0091										
	Interoffice Channel - Dedicated Transport - 56 kbps - Facility Termination per month			OHM	1L5NK	18.44	47.35	31.78	18.31	7.03						
	Interoffice Channel - Dedicated Transport - 64 kbps - per mile per month			OHM	1L5NK	0.0091										
	Interoffice Channel - Dedicated Transport - 64 kbps - Facility Termination per month			OHM	1L5NK	18.44	47.35	31.78	18.31	7.03						
	Interoffice Channel - Dedicated Channel - DS1 - Per Mile per month			OH1, OH1MS	1L5NL	0.1856										
	Interoffice Channel - Dedicated Tranport - DS1 - Facility Termination per month			OH1, OH1MS	1L5NL	88.44	105.54	98.47	21.47	19.05						
	Interoffice Channel - Dedicated Transport - DS3 - Per Mile per month			OH3, OH3MS	1L5NM	3.87										
	Interoffice Channel - Dedicated Transport - DS3 - Facility Termination per month			OH3, OH3MS	1L5NM	1,071.00	335.46	219.28	72.03	70.56						
LOCAL CHANNEL - DEDICATED TRANSPORT																
	Local Channel - Dedicated - 2-Wire Voice Grade per month			OHM	TEFV2	19.66	265.84	46.97	37.63	4.00						
	Local Channel - Dedicated - 4-Wire Voice Grade per month			OHM	TEFV4	20.45	266.54	47.67	44.22	5.33						
	Local Channel - Dedicated - DS1 per month			OH1	TEFHG	36.49	216.65	183.54	24.30	16.95						
	Local Channel - Dedicated - DS3 Facility Termination per month			OH3	TEFHJ	531.91	556.37	343.01	139.13	96.84						
LOCAL INTERCONNECTION MID-SPAN MEET																
NOTE: If Access service ride Mid-Span Meet, one-half the tariffed service Local Channel rate is applicable.																
	Local Channel - Dedicated - DS1 per month			OH1MS	TEFHG	0.00	0.00									
	Local Channel - Dedicated - DS3 per month			OH3MS	TEFHJ	0.00	0.00									
MULTIPLEXERS																
	Channelization - DS1 to DS0 Channel System			OH1, OH1MS	SATN1	146.77	101.42	71.62	11.09	10.49						
	DS3 to DS1 Channel System per month			OH3, OH3MS	SATNS	211.19	199.28	118.64	40.34	39.07						
	DS3 Interface Unit (DS1 COCI) per month			OH1, OH1MS	SATCO	13.76	10.07	7.08								
Notes: If no rate is identified in the contract, the rates, terms, and conditions for the specific service or function will be as set forth in applicable BellSouth tariff.																

LOCAL INTERCONNECTION - Georgia														Attachment: 3		Exhibit: A	
CATEGORY	RATE ELEMENTS	Interim	Zone	BCS	USOC	RATES ($)					Svc Order Submitted Elec per LSR	Svc Order Submitted Manually per LSR	Incremental Charge - Manual Svc Order vs. Electronic-1st	Incremental Charge - Manual Svc Order vs. Electronic-Add'l	Incremental Charge - Manual Svc Order vs. Electronic-Disc 1st	Incremental Charge - Manual Svc Order vs. Electronic-Disc Add'l
						Rec	Nonrecurring		Nonrecurring Disconnect		OSS Rates ($)					
							First	Add'l	First	Add'l	SOMEC	SOMAN	SOMAN	SOMAN	SOMAN	SOMAN
LOCAL INTERCONNECTION (CALL TRANSPORT AND TERMINATION)																
NOTE: "bk" beside a rate indicates that the Parties have agreed to bill and keep for that element pursuant to the terms and conditions in Attachment 3.																
TANDEM SWITCHING																
	Tandem Switching Function Per MOU			OHD		0.0004086bk										
	Multiple Tandem Switching, per MOU (applies to intial tandem only)			OHD		0.0004086										
	Tandem Intermediary Charge, per MOU*			OHD		0.0025										
*** This charge is applicable only to transit traffic and is applied in addition to applicable switching and/or interconnection charges.**																
TRUNK CHARGE																
	Installation Trunk Side Service - per DS0			OHD	TPP6X		21.53	8.11								
	Installation Trunk Side Service - per DS0			OHD	TPP9X		21.53	8.11								
	Dedicated End Office Trunk Port Service-per DS0**			OHD	TDEOP	0.00										
	Dedicated End Office Trunk Port Service-per DS1**			OH1 OH1MS	TDE1P	0.00										
	Dedicated Tandem Trunk Port Service-per DS0**			OHD	TDWOP	0.00										
	Dedicated Tandem Trunk Port Service-per DS1**			OH1 OH1MS	TDW1P	0.00										
**** This rate element is recovered on a per MOU basis and is included in the End Office Switching and Tandem Switching, per MOU rate elements**																
COMMON TRANSPORT (Shared)																
	Common Transport - Per Mile, Per MOU			OHD		0.0000027bk										
	Common Transport - Facilities Termination Per MOU			OHD		0.0001914bk										
LOCAL INTERCONNECTION (DEDICATED TRANSPORT)																
INTEROFFICE CHANNEL - DEDICATED TRANSPORT																
	Interoffice Channel - Dedicated Transport - 2-Wire Voice Grade - Per Mile per month			OHM	1L5NF	0.0057										
	Interoffice Channel - Dedicated Transport- 2- Wire Voice Grade - Facility Termination per month			OHM	1L5NF	12.87	48.455	19.48	16.575	4.995						
	Interoffice Channel - Dedicated Transport - 56 kbps - per mile per month			OHM	1L5NK	0.0057										
	Interoffice Channel - Dedicated Transport - 56 kbps - Facility Termination per month			OHM	1L5NK	7.83	48.455	19.48	16.575	4.995						
	Interoffice Channel - Dedicated Transport - 64 kbps - per mile per month			OHM	1L5NK	0.0057										
	Interoffice Channel - Dedicated Transport - 64 kbps - Facility Termination per month			OHM	1L5NK	7.83	48.455	19.48	16.575	4.995						
	Interoffice Channel - Dedicated Channel - DS1 - Per Mile per month			OH1, OH1MS	1L5NL	0.1154										
	Interoffice Channel - Dedicated Tranport - DS1 - Facility Termination per month			OH1, OH1MS	1L5NL	34.19	111.025	80.28	31.355	21.73						
	Interoffice Channel - Dedicated Transport - DS3 - Per Mile per month			OH3, OH3MS	1L5NM	2.53										
	Interoffice Channel - Dedicated Transport - DS3 - Facility Termination per month			OH3, OH3MS	1L5NM	342.02	320.47	86.32	66.77	52.81						
LOCAL CHANNEL - DEDICATED TRANSPORT																
	Local Channel - Dedicated - 2-Wire Voice Grade per month			OHM	TEFV2	7.74	121.065	53.295	46.395	13.365						
	Local Channel - Dedicated - 4-Wire Voice Grade per month			OHM	TEFV4	8.72	125.62	54.43	46.395	13.365						
	Local Channel - Dedicated - DS1 per month			OH1	TEFHG	18.47	149.46	111.195	40.355	26.115						
	Local Channel - Dedicated - DS3 Facility Termination per month			OH3	TEFHJ	147.01	445.01	145.18	112.905	75.88						
LOCAL INTERCONNECTION MID-SPAN MEET																
NOTE: If Access service ride Mid-Span Meet, one-half the tariffed service Local Channel rate is applicable.																
	Local Channel - Dedicated - DS1 per month			OH1MS	TEFHG	0.00	0.00									
	Local Channel - Dedicated - DS3 per month			OH3MS	TEFHJ	0.00	0.00									
MULTIPLEXERS																
	Channelization - DS1 to DS0 Channel System			OH1, OH1MS	SATN1	69.75	105.675	41.585	23.75	4.19						
	DS3 to DS1 Channel System per month			OH3, OH3MS	SATNS	121.90	224.475	71.83	40.005	31.065						
	DS3 Interface Unit (DS1 COCI) per month			OH1, OH1MS	SATCO	7.35	15.805	11.385	6.605	6.605						
Notes: If no rate is identified in the contract, the rates, terms, and conditions for the specific service or function will be as set forth in applicable BellSouth tariff.																

LOCAL INTERCONNECTION - Kentucky														Attachment: 3		Exhibit: A	
CATEGORY	RATE ELEMENTS	Interim	Zone	BCS	USOC	RATES ($)					Svc Order Submitted Elec per LSR	Svc Order Submitted Manually per LSR	Incremental Charge - Manual Svc Order vs. Electronic-1st	Incremental Charge - Manual Svc Order vs. Electronic-Add'l	Incremental Charge - Manual Svc Order vs. Electronic-Disc 1st	Incremental Charge - Manual Svc Order vs. Electronic-Disc Add'l
						Rec	Nonrecurring		Nonrecurring Disconnect		OSS Rates ($)					
							First	Add'l	First	Add'l	SOMEC	SOMAN	SOMAN	SOMAN	SOMAN	SOMAN
LOCAL INTERCONNECTION (CALL TRANSPORT AND TERMINATION)																
NOTE: "bk" beside a rate indicates that the Parties have agreed to bill and keep for that element pursuant to the terms and conditions in Attachment 3.																
TANDEM SWITCHING																
	Tandem Switching Function Per MOU			OHD		0.0006772bk										
	Multiple Tandem Switching, per MOU (applies to intial tandem only)			OHD		0.0006772										
	Tandem Intermediary Charge, per MOU*			OHD		0.0025										
*** This charge is applicable only to transit traffic and is applied in addition to applicable switching and/or interconnection charges.**																
TRUNK CHARGE																
	Installation Trunk Side Service - per DS0			OHD	TPP6X		21.58	8.13								
	Installation Trunk Side Service - per DS0			OHD	TPP9X		21.58	8.13								
	Dedicated End Office Trunk Port Service-per DS0**			OHD	TDEOP	0.00										
	Dedicated End Office Trunk Port Service-per DS1**			OH1 OH1MS	TDE1P	0.00										
	Dedicated Tandem Trunk Port Service-per DS0**			OHD	TDWOP	0.00										
	Dedicated Tandem Trunk Port Service-per DS1**			OH1 OH1MS	TDW1P	0.00										
**** This rate element is recovered on a per MOU basis and is included in the End Office Switching and Tandem Switching, per MOU rate elements**																
COMMON TRANSPORT (Shared)																
	Common Transport - Per Mile, Per MOU			OHD		0.0000030bk										
	Common Transport - Facilities Termination Per MOU			OHD		0.0007466bk										
LOCAL INTERCONNECTION (DEDICATED TRANSPORT)																
INTEROFFICE CHANNEL - DEDICATED TRANSPORT																
	Interoffice Channel - Dedicated Transport - 2-Wire Voice Grade - Per Mile per month			OHM	1L5NF	0.01										
	Interoffice Channel - Dedicated Transport- 2- Wire Voice Grade - Facility Termination per month			OHM	1L5NF	29.11	47.34	31.78	22.77	8.75						
	Interoffice Channel - Dedicated Transport - 56 kbps - per mile per month			OHM	1L5NK	0.0115										
	Interoffice Channel - Dedicated Transport - 56 kbps - Facility Termination per month			OHM	1L5NK	20.97	47.35	31.78	22.77	8.75						
	Interoffice Channel - Dedicated Transport - 64 kbps - per mile per month			OHM	1L5NK	0.0115										
	Interoffice Channel - Dedicated Transport - 64 kbps - Facility Termination per month			OHM	1L5NK	20.97	47.35	31.78	22.77	8.75						
	Interoffice Channel - Dedicated Channel - DS1 - Per Mile per month			OH1, OH1MS	1L5NL	0.23										
	Interoffice Channel - Dedicated Tranport - DS1 - Facility Termination per month			OH1, OH1MS	1L5NL	96.04	105.52	98.46	23.09	20.49						
	Interoffice Channel - Dedicated Transport - DS3 - Per Mile per month			OH3, OH3MS	1L5NM	4.97										
	Interoffice Channel - Dedicated Transport - DS3 - Facility Termination per month			OH3, OH3MS	1L5NM	1,175.15	335.40	219.24	89.57	87.75						
LOCAL CHANNEL - DEDICATED TRANSPORT																
	Local Channel - Dedicated - 2-Wire Voice Grade per month			OHM	TEFV2	18.57	265.78	46.96	46.79	4.98						
	Local Channel - Dedicated - 4-Wire Voice Grade per month			OHM	TEFV4	19.86	266.48	47.65	47.54	5.73						
	Local Channel - Dedicated - DS1 per month			OH1	TEFHG	40.46	209.60	176.51	30.21	21.07						
	Local Channel - Dedicated - DS3 Facility Termination per month			OH3	TEFHJ	576.05	551.38	338.08	173.00	120.42						
LOCAL INTERCONNECTION MID-SPAN MEET																
NOTE: If Access service ride Mid-Span Meet, one-half the tariffed service Local Channel rate is applicable.																
	Local Channel - Dedicated - DS1 per month			OH1MS	TEFHG	0.00	0.00									
	Local Channel - Dedicated - DS3 per month			OH3MS	TEFHJ	0.00	0.00									
MULTIPLEXERS																
	Channelization - DS1 to DS0 Channel System			OH1, OH1MS	SATN1	113.33	101.40	71.60	13.79	13.04						
	DS3 to DS1 Channel System per month			OH3, OH3MS	SATNS	158.20	199.23	118.62	50.16	48.59						
	DS3 Interface Unit (DS1 COCI) per month			OH1, OH1MS	SATCO	11.80	10.07	7.08								
Notes: If no rate is identified in the contract, the rates, terms, and conditions for the specific service or function will be as set forth in applicable BellSouth tariff.																

LOCAL INTERCONNECTION - Louisiana														Attachment: 3		Exhibit: A	
CATEGORY	RATE ELEMENTS	Interim	Zone	BCS	USOC	RATES ($)					Svc Order Submitted Elec per LSR	Svc Order Submitted Manually per LSR	Incremental Charge - Manual Svc Order vs. Electronic-1st	Incremental Charge - Manual Svc Order vs. Electronic-Add'l	Incremental Charge - Manual Svc Order vs. Electronic-Disc 1st	Incremental Charge - Manual Svc Order vs. Electronic-Disc Add'l
						Rec	Nonrecurring		Nonrecurring Disconnect		OSS Rates ($)					
							First	Add'l	First	Add'l	SOMEC	SOMAN	SOMAN	SOMAN	SOMAN	SOMAN
LOCAL INTERCONNECTION (CALL TRANSPORT AND TERMINATION)																
NOTE: "bk" beside a rate indicates that the Parties have agreed to bill and keep for that element pursuant to the terms and conditions in Attachment 3.																
TANDEM SWITCHING																
	Tandem Switching Function Per MOU			OHD		0.0005507bk										
	Multiple Tandem Switching, per MOU (applies to intial tandem only)			OHD		0.0005507										
	Tandem Intermediary Charge, per MOU*			OHD		0.0025										
*** This charge is applicable only to transit traffic and is applied in addition to applicable switching and/or interconnection charges.**																
TRUNK CHARGE																
	Installation Trunk Side Service - per DS0			OHD	TPP6X		21.64	8.15								
	Installation Trunk Side Service - per DS0			OHD	TPP9X		21.64	8.15								
	Dedicated End Office Trunk Port Service-per DS0**			OHD	TDEOP	0.00										
	Dedicated End Office Trunk Port Service-per DS1**			OH1 OH1MS	TDE1P	0.00										
	Dedicated Tandem Trunk Port Service-per DS0**			OHD	TDWOP	0.00										
	Dedicated Tandem Trunk Port Service-per DS1**			OH1 OH1MS	TDW1P	0.00										
**** This rate element is recovered on a per MOU basis and is included in the End Office Switching and Tandem Switching, per MOU rate elements**																
COMMON TRANSPORT (Shared)																
	Common Transport - Per Mile, Per MOU			OHD		0.0000032bk										
	Common Transport - Facilities Termination Per MOU			OHD		0.0003748bk										
LOCAL INTERCONNECTION (DEDICATED TRANSPORT)																
INTEROFFICE CHANNEL - DEDICATED TRANSPORT																
	Interoffice Channel - Dedicated Transport - 2-Wire Voice Grade - Per Mile per month			OHM	1L5NF	0.013										
	Interoffice Channel - Dedicated Transport- 2- Wire Voice Grade - Facility Termination per month			OHM	1L5NF	22.60	39.36	26.62								
	Interoffice Channel - Dedicated Transport - 56 kbps - per mile per month			OHM	1L5NK	0.013										
	Interoffice Channel - Dedicated Transport - 56 kbps - Facility Termination per month			OHM	1L5NK	15.61	39.37	26.62								
	Interoffice Channel - Dedicated Transport - 64 kbps - per mile per month			OHM	1L5NK	0.013										
	Interoffice Channel - Dedicated Transport - 64 kbps - Facility Termination per month			OHM	1L5NK	15.61	39.37	26.62								
	Interoffice Channel - Dedicated Channel - DS1 - Per Mile per month			OH1, OH1MS	1L5NL	0.2652										
	Interoffice Channel - Dedicated Tranport - DS1 - Facility Termination per month			OH1, OH1MS	1L5NL	70.47	86.69	79.44								
	Interoffice Channel - Dedicated Transport - DS3 - Per Mile per month			OH3, OH3MS	1L5NM	6.04										
	Interoffice Channel - Dedicated Transport - DS3 - Facility Termination per month			OH3, OH3MS	1L5NM	850.45	270.69	158.05								
LOCAL CHANNEL - DEDICATED TRANSPORT																
	Local Channel - Dedicated - 2-Wire Voice Grade per month			OHM	TEFV2	18.32	187.51	32.21								
	Local Channel - Dedicated - 4-Wire Voice Grade per month			OHM	TEFV4	19.41	187.94	32.63								
	Local Channel - Dedicated - DS1 per month			OH1	TEFHG	39.18	172.34	149.27								
	Local Channel - Dedicated - DS3 Facility Termination per month			OH3	TEFHJ	469.44	438.46	256.30								
LOCAL INTERCONNECTION MID-SPAN MEET																
NOTE: If Access service ride Mid-Span Meet, one-half the tariffed service Local Channel rate is applicable.																
	Local Channel - Dedicated - DS1 per month			OH1MS	TEFHG	0.00	0.00									
	Local Channel - Dedicated - DS3 per month			OH3MS	TEFHJ	0.00	0.00									
MULTIPLEXERS																
	Channelization - DS1 to DS0 Channel System			OH1, OH1MS	SATN1	105.09	88.41	60.76								
	DS3 to DS1 Channel System per month			OH3, OH3MS	SATNS	201.48	172.99	91.25								
	DS3 Interface Unit (DS1 COCI) per month			OH1, OH1MS	SATCO	11.78	6.39	4.58								
Notes: If no rate is identified in the contract, the rates, terms, and conditions for the specific service or function will be as set forth in applicable BellSouth tariff.																

LOCAL INTERCONNECTION - Mississippi														Attachment: 3		Exhibit: A	
CATEGORY	RATE ELEMENTS	Interim	Zone	BCS	USOC	RATES ($)					Svc Order Submitted Elec per LSR	Svc Order Submitted Manually per LSR	Incremental Charge - Manual Svc Order vs. Electronic-1st	Incremental Charge - Manual Svc Order vs. Electronic-Add'l	Incremental Charge - Manual Svc Order vs. Electronic-Disc 1st	Incremental Charge - Manual Svc Order vs. Electronic-Disc Add'l
						Rec	Nonrecurring		Nonrecurring Disconnect		OSS Rates ($)					
							First	Add'l	First	Add'l	SOMEC	SOMAN	SOMAN	SOMAN	SOMAN	SOMAN
LOCAL INTERCONNECTION (CALL TRANSPORT AND TERMINATION)																
NOTE: "bk" beside a rate indicates that the Parties have agreed to bill and keep for that element pursuant to the terms and conditions in Attachment 3.																
TANDEM SWITCHING																
	Tandem Switching Function Per MOU			OHD		0.0005379bk										
	Multiple Tandem Switching, per MOU (applies to intial tandem only)			OHD		0.0005379										
	Tandem Intermediary Charge, per MOU*			OHD		0.0025										
*** This charge is applicable only to transit traffic and is applied in addition to applicable switching and/or interconnection charges.**																
TRUNK CHARGE																
	Installation Trunk Side Service - per DS0			OHD	TPP6X		21.58	8.13								
	Installation Trunk Side Service - per DS0			OHD	TPP9X		21.58	8.13								
	Dedicated End Office Trunk Port Service-per DS0**			OHD	TDEOP	0.00										
	Dedicated End Office Trunk Port Service-per DS1**			OH1 OH1MS	TDE1P	0.00										
	Dedicated Tandem Trunk Port Service-per DS0**			OHD	TDWOP	0.00										
	Dedicated Tandem Trunk Port Service-per DS1**			OH1 OH1MS	TDW1P	0.00										
**** This rate element is recovered on a per MOU basis and is included in the End Office Switching and Tandem Switching, per MOU rate elements**																
COMMON TRANSPORT (Shared)																
	Common Transport - Per Mile, Per MOU			OHD		0.0000026bk										
	Common Transport - Facilities Termination Per MOU			OHD		0.0004541bk										
LOCAL INTERCONNECTION (DEDICATED TRANSPORT)																
INTEROFFICE CHANNEL - DEDICATED TRANSPORT																
	Interoffice Channel - Dedicated Transport - 2-Wire Voice Grade - Per Mile per month			OHM	1L5NF	0.0098										
	Interoffice Channel - Dedicated Transport- 2- Wire Voice Grade - Facility Termination per month			OHM	1L5NF	22.52	40.77	27.57	17.26	7.11						
	Interoffice Channel - Dedicated Transport - 56 kbps - per mile per month			OHM	1L5NK	0.0098										
	Interoffice Channel - Dedicated Transport - 56 kbps - Facility Termination per month			OHM	1L5NK	15.68	40.78	27.57	17.26	7.11						
	Interoffice Channel - Dedicated Transport - 64 kbps - per mile per month			OHM	1L5NK	0.0098										
	Interoffice Channel - Dedicated Transport - 64 kbps - Facility Termination per month			OHM	1L5NK	15.68	40.78	27.57	17.26	7.11						
	Interoffice Channel - Dedicated Channel - DS1 - Per Mile per month			OH1, OH1MS	1L5NL	0.201										
	Interoffice Channel - Dedicated Tranport - DS1 - Facility Termination per month			OH1, OH1MS	1L5NL	57.33	89.79	82.28	16.86	14.90						
	Interoffice Channel - Dedicated Transport - DS3 - Per Mile per month			OH3, OH3MS	1L5NM	4.76										
	Interoffice Channel - Dedicated Transport - DS3 - Facility Termination per month			OH3, OH3MS	1L5NM	641.90	280.37	163.70	62.08	60.29						
LOCAL CHANNEL - DEDICATED TRANSPORT																
	Local Channel - Dedicated - 2-Wire Voice Grade per month			OHM	TEFV2	14.91	194.22	33.36	37.79	3.30						
	Local Channel - Dedicated - 4-Wire Voice Grade per month			OHM	TEFV4	15.99	194.66	33.80	38.27	3.78						
	Local Channel - Dedicated - DS1 per month			OH1	TEFHG	36.83	178.50	154.61	22.89	15.74						
	Local Channel - Dedicated - DS3 Facility Termination per month			OH3	TEFHJ	413.87	454.13	264.47	123.23	86.19						
LOCAL INTERCONNECTION MID-SPAN MEET																
NOTE: If Access service ride Mid-Span Meet, one-half the tariffed service Local Channel rate is applicable.																
	Local Channel - Dedicated - DS1 per month			OH1MS	TEFHG	0.00	0.00									
	Local Channel - Dedicated - DS3 per month			OH3MS	TEFHJ	0.00	0.00									
MULTIPLEXERS																
	Channelization - DS1 to DS0 Channel System			OH1, OH1MS	SATN1	102.85	91.57	62.94	10.87	10.10						
	DS3 to DS1 Channel System per month			OH3, OH3MS	SATNS	170.63	179.17	94.52	34.30	32.82						
	DS3 Interface Unit (DS1 COCI) per month			OH1, OH1MS	SATCO	12.96	6.62	4.74								
Notes: If no rate is identified in the contract, the rates, terms, and conditions for the specific service or function will be as set forth in applicable BellSouth tariff.																

LOCAL INTERCONNECTION - North Carolina														Attachment: 3		Exhibit: A	
CATEGORY	RATE ELEMENTS	Interim	Zone	BCS	USOC	RATES ($)					Svc Order Submitted Elec per LSR	Svc Order Submitted Manually per LSR	Incremental Charge - Manual Svc Order vs. Electronic-1st	Incremental Charge - Manual Svc Order vs. Electronic-Add'l	Incremental Charge - Manual Svc Order vs. Electronic-Disc 1st	Incremental Charge - Manual Svc Order vs. Electronic-Disc Add'l
						Rec	Nonrecurring		Nonrecurring Disconnect		OSS Rates ($)					
							First	Add'l	First	Add'l	SOMEC	SOMAN	SOMAN	SOMAN	SOMAN	SOMAN
LOCAL INTERCONNECTION (CALL TRANSPORT AND TERMINATION)																
NOTE: "bk" beside a rate indicates that the Parties have agreed to bill and keep for that element pursuant to the terms and conditions in Attachment 3.																
TANDEM SWITCHING																
	Tandem Switching Function Per MOU			OHD		0.0012000bk										
	Multiple Tandem Switching, per MOU (applies to intial tandem only)			OHD		0.0012										
	Tandem Intermediary Charge, per MOU*			OHD		0.0025										
*** This charge is applicable only to transit traffic and is applied in addition to applicable switching and/or interconnection charges.**																
TRUNK CHARGE																
	Installation Trunk Side Service - per DS0			OHD	TPP6X		21.55	8.12								
	Installation Trunk Side Service - per DS0			OHD	TPP9X		21.55	8.12								
	Dedicated End Office Trunk Port Service-per DS0**			OHD	TDEOP	0.00										
	Dedicated End Office Trunk Port Service-per DS1**			OH1 OH1MS	TDE1P	0.00										
	Dedicated Tandem Trunk Port Service-per DS0**			OHD	TDWOP	0.00										
	Dedicated Tandem Trunk Port Service-per DS1**			OH1 OH1MS	TDW1P	0.00										
**** This rate element is recovered on a per MOU basis and is included in the End Office Switching and Tandem Switching, per MOU rate elements**																
COMMON TRANSPORT (Shared)																
	Common Transport - Per Mile, Per MOU			OHD		0.0000100bk										
	Common Transport - Facilities Termination Per MOU			OHD		0.0003400bk										
LOCAL INTERCONNECTION (DEDICATED TRANSPORT)																
INTEROFFICE CHANNEL - DEDICATED TRANSPORT																
	Interoffice Channel - Dedicated Transport - 2-Wire Voice Grade - Per Mile per month			OHM	1L5NF	0.0282										
	Interoffice Channel - Dedicated Transport- 2- Wire Voice Grade - Facility Termination per month			OHM	1L5NF	18.00	137.48	52.58								
	Interoffice Channel - Dedicated Transport - 56 kbps - per mile per month			OHM	1L5NK	0.0282										
	Interoffice Channel - Dedicated Transport - 56 kbps - Facility Termination per month			OHM	1L5NK	17.40	137.48	52.58								
	Interoffice Channel - Dedicated Transport - 64 kbps - per mile per month			OHM	1L5NK	0.0282										
	Interoffice Channel - Dedicated Transport - 64 kbps - Facility Termination per month			OHM	1L5NK	17.40	137.48	52.58								
	Interoffice Channel - Dedicated Channel - DS1 - Per Mile per month			OH1, OH1MS	1L5NL	0.5753										
	Interoffice Channel - Dedicated Tranport - DS1 - Facility Termination per month			OH1, OH1MS	1L5NL	71.29	217.17	163.75								
	Interoffice Channel - Dedicated Transport - DS3 - Per Mile per month			OH3, OH3MS	1L5NM	12.98										
	Interoffice Channel - Dedicated Transport - DS3 - Facility Termination per month			OH3, OH3MS	1L5NM	720.38	794.94	579.55								
LOCAL CHANNEL - DEDICATED TRANSPORT																
	Local Channel - Dedicated - 2-Wire Voice Grade per month			OHM	TEFV2	11.24	553.80	89.69								
	Local Channel - Dedicated - 4-Wire Voice Grade per month			OHM	TEFV4	12.03	562.23	92.67								
	Local Channel - Dedicated - DS1 per month			OH1	TEFHG	27.05	534.48	462.69								
	Local Channel - Dedicated - DS3 Facility Termination per month			OH3	TEFHJ	298.92	438.46	256.30								
LOCAL INTERCONNECTION MID-SPAN MEET																
NOTE: If Access service ride Mid-Span Meet, one-half the tariffed service Local Channel rate is applicable.																
	Local Channel - Dedicated - DS1 per month			OH1MS	TEFHG	0.00	0.00									
	Local Channel - Dedicated - DS3 per month			OH3MS	TEFHJ	0.00	0.00									
MULTIPLEXERS																
	Channelization - DS1 to DS0 Channel System			OH1, OH1MS	SATN1	146.69	197.78	140.06								
	DS3 to DS1 Channel System per month			OH3, OH3MS	SATNS	233.10	403.97	234.40								
	DS3 Interface Unit (DS1 COCI) per month			OH1, OH1MS	SATCO	16.07	13.09	9.38								
Notes: If no rate is identified in the contract, the rates, terms, and conditions for the specific service or function will be as set forth in applicable BellSouth tariff.																

LOCAL INTERCONNECTION - South Carolina														Attachment: 3		Exhibit: A	
CATEGORY	RATE ELEMENTS	Interim	Zone	BCS	USOC	RATES ($)					Svc Order Submitted Elec per LSR	Svc Order Submitted Manually per LSR	Incremental Charge - Manual Svc Order vs. Electronic-1st	Incremental Charge - Manual Svc Order vs. Electronic-Add'l	Incremental Charge - Manual Svc Order vs. Electronic-Disc 1st	Incremental Charge - Manual Svc Order vs. Electronic-Disc Add'l
						Rec	Nonrecurring		Nonrecurring Disconnect		OSS Rates ($)					
							First	Add'l	First	Add'l	SOMEC	SOMAN	SOMAN	SOMAN	SOMAN	SOMAN
LOCAL INTERCONNECTION (CALL TRANSPORT AND TERMINATION)																
NOTE: "bk" beside a rate indicates that the Parties have agreed to bill and keep for that element pursuant to the terms and conditions in Attachment 3.																
TANDEM SWITCHING																
	Tandem Switching Function Per MOU			OHD		0.0007360bk										
	Multiple Tandem Switching, per MOU (applies to intial tandem only)			OHD		0.000736										
	Tandem Intermediary Charge, per MOU*			OHD		0.0025										
*** This charge is applicable only to transit traffic and is applied in addition to applicable switching and/or interconnection charges.**																
TRUNK CHARGE																
	Installation Trunk Side Service - per DS0			OHD	TPP6X		21.65	8.16								
	Installation Trunk Side Service - per DS0			OHD	TPP9X		21.65	8.16								
	Dedicated End Office Trunk Port Service-per DS0**			OHD	TDEOP	0.00										
	Dedicated End Office Trunk Port Service-per DS1**			OH1 OH1MS	TDE1P	0.00										
	Dedicated Tandem Trunk Port Service-per DS0**			OHD	TDWOP	0.00										
	Dedicated Tandem Trunk Port Service-per DS1**			OH1 OH1MS	TDW1P	0.00										
**** This rate element is recovered on a per MOU basis and is included in the End Office Switching and Tandem Switching, per MOU rate elements**																
COMMON TRANSPORT (Shared)																
	Common Transport - Per Mile, Per MOU			OHD		0.0000045bk										
	Common Transport - Facilities Termination Per MOU			OHD		0.0004095bk										
LOCAL INTERCONNECTION (DEDICATED TRANSPORT)																
INTEROFFICE CHANNEL - DEDICATED TRANSPORT																
	Interoffice Channel - Dedicated Transport - 2-Wire Voice Grade - Per Mile per month			OHM	1L5NF	0.0167										
	Interoffice Channel - Dedicated Transport- 2- Wire Voice Grade - Facility Termination per month			OHM	1L5NF	24.30	40.63	27.47	16.77	6.91						
	Interoffice Channel - Dedicated Transport - 56 kbps - per mile per month			OHM	1L5NK	0.0167										
	Interoffice Channel - Dedicated Transport - 56 kbps - Facility Termination per month			OHM	1L5NK	16.76	40.63	27.47	16.77	6.91						
	Interoffice Channel - Dedicated Transport - 64 kbps - per mile per month			OHM	1L5NK	0.0167										
	Interoffice Channel - Dedicated Transport - 64 kbps - Facility Termination per month			OHM	1L5NK	16.76	40.63	27.47	16.77	6.91						
	Interoffice Channel - Dedicated Channel - DS1 - Per Mile per month			OH1, OH1MS	1L5NL	0.3415										
	Interoffice Channel - Dedicated Tranport - DS1 - Facility Termination per month			OH1, OH1MS	1L5NL	77.14	89.47	81.99	16.39	14.48						
	Interoffice Channel - Dedicated Transport - DS3 - Per Mile per month			OH3, OH3MS	1L5NM	8.02										
	Interoffice Channel - Dedicated Transport - DS3 - Facility Termination per month			OH3, OH3MS	1L5NM	880.65	279.37	163.12	60.33	58.59						
LOCAL CHANNEL - DEDICATED TRANSPORT																
	Local Channel - Dedicated - 2-Wire Voice Grade per month			OHM	TEFV2	15.33	193.53	33.24	36.72	3.21						
	Local Channel - Dedicated - 4-Wire Voice Grade per month			OHM	TEFV4	16.54	193.97	33.68	37.19	3.68						
	Local Channel - Dedicated - DS1 per month			OH1	TEFHG	42.62	177.87	154.06	22.24	15.30						
	Local Channel - Dedicated - DS3 Facility Termination per month			OH3	TEFHJ	446.00	452.52	264.53	119.75	83.77						
LOCAL INTERCONNECTION MID-SPAN MEET																
NOTE: If Access service ride Mid-Span Meet, one-half the tariffed service Local Channel rate is applicable.																
	Local Channel - Dedicated - DS1 per month			OH1MS	TEFHG	0.00	0.00									
	Local Channel - Dedicated - DS3 per month			OH3MS	TEFHJ	0.00	0.00									
MULTIPLEXERS																
	Channelization - DS1 to DS0 Channel System			OH1, OH1MS	SATN1	107.57	91.24	62.71	10.56	9.81						
	DS3 to DS1 Channel System per month			OH3, OH3MS	SATNS	144.02	178.54	94.18	33.33	31.90						
	DS3 Interface Unit (DS1 COCI) per month			OH1, OH1MS	SATCO	8.64	6.59	4.73								
Notes: If no rate is identified in the contract, the rates, terms, and conditions for the specific service or function will be as set forth in applicable BellSouth tariff.																

LOCAL INTERCONNECTION - Tennessee														Attachment: 3		Exhibit: A	
CATEGORY	RATE ELEMENTS	Interim	Zone	BCS	USOC	RATES ($)					Svc Order Submitted Elec per LSR	Svc Order Submitted Manually per LSR	Incremental Charge - Manual Svc Order vs. Electronic-1st	Incremental Charge - Manual Svc Order vs. Electronic-Add'l	Incremental Charge - Manual Svc Order vs. Electronic-Disc 1st	Incremental Charge - Manual Svc Order vs. Electronic-Disc Add'l
						Rec	Nonrecurring		Nonrecurring Disconnect		OSS Rates ($)					
							First	Add'l	First	Add'l	SOMEC	SOMAN	SOMAN	SOMAN	SOMAN	SOMAN
LOCAL INTERCONNECTION (CALL TRANSPORT AND TERMINATION)																
NOTE: "bk" beside a rate indicates that the Parties have agreed to bill and keep for that element pursuant to the terms and conditions in Attachment 3.																
TANDEM SWITCHING																
	Tandem Switching Function Per MOU			OHD		0.0009778bk										
	Multiple Tandem Switching, per MOU (applies to intial tandem only)			OHD		0.0009778										
	Tandem Intermediary Charge, per MOU*			OHD		0.0025										
*** This charge is applicable only to transit traffic and is applied in addition to applicable switching and/or interconnection charges.**																
TRUNK CHARGE																
	Installation Trunk Side Service - per DS0			OHD	TPP6X		21.59	8.09								
	Installation Trunk Side Service - per DS0			OHD	TPP9X		21.59	8.09								
	Dedicated End Office Trunk Port Service-per DS0**			OHD	TDEOP	0.00										
	Dedicated End Office Trunk Port Service-per DS1**			OH1 OH1MS	TDE1P	0.00										
	Dedicated Tandem Trunk Port Service-per DS0**			OHD	TDWOP	0.00										
	Dedicated Tandem Trunk Port Service-per DS1**			OH1 OH1MS	TDW1P	0.00										
**** This rate element is recovered on a per MOU basis and is included in the End Office Switching and Tandem Switching, per MOU rate elements**																
COMMON TRANSPORT (Shared)																
	Common Transport - Per Mile, Per MOU			OHD		0.0000064bk										
	Common Transport - Facilities Termination Per MOU			OHD		0.0003871bk										
LOCAL INTERCONNECTION (DEDICATED TRANSPORT)																
INTEROFFICE CHANNEL - DEDICATED TRANSPORT																
	Interoffice Channel - Dedicated Transport - 2-Wire Voice Grade - Per Mile per month			OHM	1L5NF	0.0174										
	Interoffice Channel - Dedicated Transport- 2- Wire Voice Grade - Facility Termination per month			OHM	1L5NF	18.58	55.39	17.37	27.96	3.51						
	Interoffice Channel - Dedicated Transport - 56 kbps - per mile per month			OHM	1L5NK	0.0174										
	Interoffice Channel - Dedicated Transport - 56 kbps - Facility Termination per month			OHM	1L5NK	17.98	55.39	17.37	27.96	3.51						
	Interoffice Channel - Dedicated Transport - 64 kbps - per mile per month			OHM	1L5NK	0.0174										
	Interoffice Channel - Dedicated Transport - 64 kbps - Facility Termination per month			OHM	1L5NK	17.98	55.39	17.37	27.96	3.51						
	Interoffice Channel - Dedicated Channel - DS1 - Per Mile per month			OH1, OH1MS	1L5NL	0.3562										
	Interoffice Channel - Dedicated Tranport - DS1 - Facility Termination per month			OH1, OH1MS	1L5NL	77.86	112.40	76.27	19.55	14.99						
	Interoffice Channel - Dedicated Transport - DS3 - Per Mile per month			OH3, OH3MS	1L5NM	2.34										
	Interoffice Channel - Dedicated Transport - DS3 - Facility Termination per month			OH3, OH3MS	1L5NM	848.99	395.29	176.56	109.04	105.91						
LOCAL CHANNEL - DEDICATED TRANSPORT																
	Local Channel - Dedicated - 2-Wire Voice Grade per month			OHM	TEFV2	19.43	199.33	24.16	54.81	4.80						
	Local Channel - Dedicated - 4-Wire Voice Grade per month			OHM	TEFV4	20.56	201.53	24.83	55.52	5.51						
	Local Channel - Dedicated - DS1 per month			OH1	TEFHG	40.99	277.35	233.26	33.18	22.30						
	Local Channel - Dedicated - DS3 Facility Termination per month			OH3	TEFHJ	611.30	595.37	304.50	215.82	151.15						
LOCAL INTERCONNECTION MID-SPAN MEET																
NOTE: If Access service ride Mid-Span Meet, one-half the tariffed service Local Channel rate is applicable.																
	Local Channel - Dedicated - DS1 per month			OH1MS	TEFHG	0.00	0.00									
	Local Channel - Dedicated - DS3 per month			OH3MS	TEFHJ	0.00	0.00									
MULTIPLEXERS																
	Channelization - DS1 to DS0 Channel System			OH1, OH1MS	SATN1	80.77	141.87	77.11	44.47	42.62						
	DS3 to DS1 Channel System per month			OH3, OH3MS	SATNS	222.98	308.03	108.47	6.34	4.23						
	DS3 Interface Unit (DS1 COCI) per month			OH1, OH1MS	SATCO	17.58	6.07	4.66								
Notes: If no rate is identified in the contract, the rates, terms, and conditions for the specific service or function will be as set forth in applicable BellSouth tariff.																

Attachment 4

Physical Collocation

Version 3Q03: 11/12/2003

BELLSOUTH

PHYSICAL COLLOCATION

1. Scope of Attachment

1.1 The rates, terms, and conditions contained within this Attachment shall only apply when BLC Management is physically collocated as a sole occupant or as a Host within a "BellSouth Premises" location pursuant to this Attachment. "BellSouth Premises" include BellSouth Central Offices and Serving Wire Centers (hereinafter "BellSouth Premises"). This Attachment is applicable to "BellSouth Premises" owned or leased by BellSouth. However, if the "BellSouth Premises" occupied by BellSouth is leased by BellSouth from a third party, special considerations and intervals may apply in addition to the terms and conditions contained in this Attachment.

1.2 Right to Occupy. BellSouth shall offer to BLC Management collocation on rates, terms, and conditions that are just, reasonable, non-discriminatory and consistent with the rules of the FCC. Subject to the rates, terms and conditions of this Attachment, where space is available and it is technically feasible, BellSouth will allow BLC Management to occupy a certain area designated by BellSouth within a "BellSouth Premises", or on BellSouth property upon which the "BellSouth Premises" is located, of a size which is specified by BLC Management and agreed to by BellSouth (hereinafter "Collocation Space"). The necessary rates, terms and conditions for h premises as defined by the FCC, other than BellSouth Premises, shall be negotiated upon reasonable request for collocation at such premises.

1.2.1 Neither BellSouth nor any of BellSouth's affiliates may reserve space for future use on more preferential terms than those set forth in this Attachment.

1.2.1.1 In all states other than Florida, the size specified by BLC Management may contemplate a request for space sufficient to accommodate BLC Management's growth within a twenty-four (24) month period.

1.2.1.2 In the state of Florida, the size specified by BLC Management may contemplate a request for space sufficient to accommodate BLC Management's growth within an eighteen (18) month period.

1.3 Space Allocation. BellSouth shall attempt to accommodate BLC Management's requested space preferences, if any. In allocating Collocation Space, BellSouth shall not materially increase BLC Management's cost or materially delay BLC Management's occupation and use of the Collocation Space, assign Collocation Space that will impair the quality of service or otherwise limit the service BLC Management wishes to offer, reduce unreasonably the total space available for physical collocation or preclude unreasonable physical collocation within the "BellSouth Premises". Space shall not be available for collocation if it is: (a) physically occupied by non-obsolete equipment; (b) assigned to another collocated telecommunications carrier; (c) used to

provide physical access to occupied space; (d) used to enable technicians to work on equipment located within occupied space; (e) properly reserved for future use, either by BellSouth or another collocated telecommunications carrier; or (f) essential for the administration and proper functioning of the "BellSouth Premises". BellSouth may segregate Collocation Space and require separate entrances for collocated telecommunications carriers to access their Collocation Space, pursuant to FCC Rules.

1.4 Space Reclamation. In the event of space exhaust within a "BellSouth Premises", BellSouth may include in its documentation for the Petition for Waiver filed with the Commission, any unutilized space in the "BellSouth Premises", including unutilized space held by BLC Management and other collocated telecommunications carriers in BellSouth's Premises. BLC Management will be responsible for the justification of unutilized space within its Collocation Space, if the Commission requires such justification.

1.4.1 If physical Collocation Space is needed to accommodate another telecommunication carrier's request for physical collocation or BellSouth's own immediate space needs, BellSouth may reclaim from BLC Management any physical Collocation Space that is not being "efficiently used" or that cannot be proven to be needed within the two (2) year (18 months in Florida) planning period. This term ("efficiently used") shall mean that substantially all of the floor space is taken up by BLC Management's collocated equipment as described in Section 5.1 of this Attachment. In addition, BellSouth may reclaim, for the same reasons as those stated above, any space that is not being used at all to house BLC Management's equipment and/or facilities for collocation purposes. BLC Management will have one hundred eighty (180) calendar days from receipt of notice by BellSouth to BLC Management of the need for such physical Collocation Space to ensure that such space is being used in accordance with the terms and conditions herein and shall be responsible to justify to the Commission, if the Commission requires such justification.

1.5 Use of Space. BLC Management shall use the Collocation Space for the purpose of installing, maintaining and operating BLC Management's equipment (including testing and monitoring equipment) necessary for interconnection with BellSouth's services/facilities or for accessing BellSouth's unbundled network elements for the provision of telecommunications services, as specifically set forth in this Agreement. The Collocation Space assigned to BLC Management may not be used for any purposes other than as specifically described herein or in any amendment hereto.

1.6 Rates and Charges. BLC Management agrees to pay the rates and charges identified in Exhibit B attached hereto.

1.7 If any due date contained in this Attachment falls on a weekend or a National holiday, the due date will be the next business day thereafter. For intervals of ten (10) calendar days or less, National holidays will be excluded.

1.8 The Parties agree to comply with all applicable federal, state, county, local and administrative laws, rules, ordinances, regulations and codes in the performance of their obligations hereunder.

2. Space Availability Report

2.1 Space Availability Report. Upon request from BLC Management and at the BLC Management's expense, BellSouth will provide a written report (Space Availability Report) describing in detail the space that is currently available for collocation at a particular "BellSouth Premises". This report will include the amount of Collocation Space available at the "BellSouth Premises" requested, the number of collocators present at the "BellSouth Premises", any modifications in the use of the space since the last report on the "BellSouth Premises" requested and the measures BellSouth is taking to make additional space available for collocation arrangements. A Space Availability Report does not reserve space at the "BellSouth Premises" for which the Space Availability Report was requested by BLC Management.

2.1.1 The request from BLC Management for a Space Availability Report must be in writing and include the "BellSouth Premises" street address, as identified in the Local Exchange Routing Guide (LERG) and Common Language Location Identification (CLLI) code of the "BellSouth Premises". CLLI code information is located in the National Exchange Carrier Association (NECA) Tariff FCC No. 4.

2.1.2 BellSouth will respond to a request for a Space Availability Report for a particular "BellSouth Premises" within ten (10) calendar days of the receipt of such a request. BellSouth will make its best efforts to respond in ten (10) calendar days to a Space Availability Report request when the request includes from two (2) to five (5) "BellSouth Premises" within the same state. The response time for Space Availability Report requests of more than five (5) "BellSouth Premises", whether the request are for the same state or for two or more states within the BellSouth Region, shall be negotiated between the Parties. If BellSouth cannot meet the ten (10) calendar day response time, BellSouth shall notify BLC Management and inform BLC Management of the timeframe under which it can respond.

3. Collocation Options

3.1 Cageless. BellSouth shall allow BLC Management to collocate BLC Management's equipment and facilities without requiring the construction of a cage or similar structure. BellSouth shall allow BLC Management to have direct access to BLC Management's equipment and facilities in accordance with Section 5.9. BellSouth shall make cageless collocation available in single bay increments. Except where BLC Management's equipment requires special technical considerations (e.g., special cable racking or isolated ground plane), BellSouth shall assign cageless Collocation Space in conventional equipment rack lineups where feasible. For equipment requiring special technical considerations, BLC Management must provide the equipment layout,

including spatial dimensions for such equipment pursuant to generic requirements contained in Telcordia GR-63-Core, and shall be responsible for compliance with all special technical requirements associated with such equipment.

3.2 Caged. At BLC Management's expense, BLC Management will arrange with a Supplier certified by BellSouth (BellSouth Certified Supplier) to construct a collocation arrangement enclosure in accordance with BellSouth's Technical References (TRs) (hereinafter referred to as Specifications) prior to starting equipment installation. BellSouth will provide Specifications upon request. Where local building codes require enclosure specifications more stringent than BellSouth's enclosure Specifications, BLC Management and BLC Management's BellSouth Certified Supplier must comply with the more stringent local building code requirements. BLC Management's BellSouth Certified Supplier shall be responsible for filing and obtaining any and all necessary permits and/or licenses for such construction. BellSouth shall cooperate with BLC Management and provide, at BLC Management's expense, the documentation, including existing building architectural drawings, enclosure drawings, and Specifications required and necessary for BLC Management's BellSouth Certified Supplier to obtain all necessary permits and/or other licenses. BLC Management's BellSouth Certified Supplier shall bill BLC Management directly for all work performed for BLC Management to comply with this Attachment. BellSouth shall have no liability for, nor responsibility to pay, such charges imposed by BLC Management's BellSouth Certified Supplier. BLC Management must provide the local BellSouth Central Office Building Contact with two (2) Access Keys that will allow entry into the locked enclosure. Except in the case of an emergency, BellSouth will not access BLC Management's locked enclosure prior to notifying BLC Management at least forty-eight (48) hours or two (2) business days, whichever is greater, before access to the Collocation Space is required. Upon request, BellSouth shall construct the enclosure for BLC Management.

3.2.1 BellSouth may elect to review BLC Management's plans and specifications prior to allowing construction to start, to ensure compliance with BellSouth's Specifications. BellSouth will notify BLC Management of its desire to execute this review in BellSouth's response to the Initial Application, if BLC Management has indicated its desire to construct its own enclosure. If BLC Management's Initial Application does not indicate its desire to construct its own enclosure, but its subsequent firm order does indicate its desire to construct its own enclosure, then notification to review will be given within ten (10) calendar days after the date the firm order has been received by BellSouth. BellSouth shall complete its review within fifteen (15) calendar days after the receipt of BLC Management's plans and specifications. Regardless of whether or not BellSouth elects to review BLC Management's plans and specifications, BellSouth reserves the right to inspect the enclosure after construction has been completed to ensure that it is constructed according to BLC Management's submitted plans and specifications and/or BellSouth's Specifications, as applicable. If BellSouth decides to inspect the constructed Collocation Space, BellSouth will complete its inspection within fifteen (15) calendar days after receipt of written notification of completion of the enclosure from BLC Management. BellSouth shall

require BLC Management to remove or correct within seven (7) calendar days, at BLC Management's expense, any structure that does not meet BLC Management's plans and specifications or BellSouth's Specifications, as applicable.

3.3 Shared Caged Collocation. BLC Management may allow other telecommunications carriers to share BLC Management's caged collocation arrangement, pursuant to the terms and conditions agreed to by BLC Management (Host) and the other telecommunications carriers (Guests) contained in this Section, except where the "BellSouth Premises" is located within a leased space and BellSouth is prohibited by said lease from offering such an option to BLC Management. BellSouth shall be notified in writing by BLC Management upon the execution of any agreement between the Host and its Guest(s) within ten (10) calendar days of its execution and prior to the submission of any Firm Orders. Further, such notification shall include the name of the Guest(s), the term of the agreement, and a certification by BLC Management that said agreement imposes upon the Guest(s) the same terms and conditions for Collocation Space as set forth in this Attachment between BellSouth and BLC Management. The term of the agreement between the Host and its Guest(s) shall not exceed the term of this Attachment between BellSouth and BLC Management.

3.3.1 BLC Management, as the Host, shall be the sole interface and responsible Party to BellSouth for the assessment and billing of rates and charges contained within this Attachment. BLC Management is also responsible for ensuring that the safety and security requirements of this Attachment are fully complied with by the Guest(s), its employees and agents. BellSouth shall provide BLC Management with a proration of the costs of the Collocation Space based on the number of collocators and the space used by each. There will be a minimum charge of one (1) bay/rack per Host/Guest. In addition to the above, for all states other than Florida, BLC Management shall be the responsible party to BellSouth for the purpose of submitting applications for initial and additional equipment placement for the Guest(s). In Florida, the Guest(s) may submit its own initial and subsequent equipment placement applications using the Host's Access Carrier Name Abbreviation (ACNA). A separate Guest application shall result in the assessment of an Initial Application Fee or a Subsequent Application Fee, as set forth in Exhibit B, which will be billed to the Host on the date that BellSouth provides its written response to the Guest(s) Bona Fide Application (Application Response).

3.3.2 Notwithstanding the foregoing, the Guest(s) may submit service orders directly to BellSouth to request the provisioning of interconnecting facilities between BellSouth and the Guest(s), the provisioning of services, and access to unbundled network elements. The bill for these interconnecting facilities, services and UNEs will be charged to the Guest(s) pursuant to the applicable Tariff or the Guest's Interconnection Agreement with BellSouth.

3.3.3 BLC Management shall indemnify and hold harmless BellSouth from any and all claims, actions, causes of action, of whatever kind or nature arising out of the presence of BLC Management's Guest(s) in the Collocation Space, except to the extent caused by BellSouth's sole negligence, gross negligence, or willful misconduct.

3.4 Adjacent Collocation. Subject to technical feasibility and space availability, BellSouth will permit an adjacent collocation arrangement (Adjacent Arrangement) on "BellSouth Premises"' property only when space within the requested "BellSouth Premises" is legitimately exhausted and where the Adjacent Arrangement does not interfere with access to existing or planned structures or facilities on the "BellSouth Premises"' property. An Adjacent Arrangement shall be procured by BLC Management or constructed by the BLC Management's BellSouth Certified Supplier and must be in conformance with BellSouth's design and construction Specifications. Further, BLC Management shall construct, procure, maintain and operate said Adjacent Arrangement(s) pursuant to all of the rates, terms and conditions set forth in this Attachment.

3.4.1 If BLC Management requests Adjacent Collocation, pursuant to the conditions stated in 3.4 above, BLC Management must arrange with a BellSouth Certified Supplier to construct the Adjacent Arrangement structure in accordance with BellSouth's Specifications. BellSouth will provide the appropriate Specifications upon request. Where local building codes require enclosure specifications more stringent than BellSouth's Specifications, BLC Management and BLC Management's BellSouth Certified Supplier shall comply with the more stringent local building code requirements. BLC Management's BellSouth Certified Supplier shall be responsible for filing and receiving any and all necessary zoning, permits and/or licenses for such construction. BLC Management's BellSouth Certified Supplier shall bill BLC Management directly for all work performed for BLC Management to comply with this Attachment. BellSouth shall have no liability for, nor responsibility to pay, such charges imposed by BLC Management's BellSouth Certified Supplier. BLC Management must provide the local BellSouth Central Office Building Contact with two (2) cards, keys or other access devices used to gain entry into the locked enclosure. Except in the case of an emergency, BellSouth will not access BLC Management's locked enclosure prior to notifying BLC Management at least forty-eight (48) hours or two (2) business days, whichever is greater, before access to the Collocation Space is required.

3.4.2 BLC Management must submit its Adjacent Arrangement construction plans and specifications to BellSouth when it places its firm order. BellSouth shall review BLC Management's plans and specifications prior to the construction of an Adjacent Arrangement(s) to ensure BLC Management's compliance with BellSouth's Specifications. BellSouth shall complete its review within fifteen (15) calendar days after receipt of the plans and specifications from BLC Management for the Adjacent Arrangement. BellSouth may inspect the Adjacent Arrangement during and after construction is completed to ensure that it is constructed according to BLC Management's submitted plans and specifications. If BellSouth decides to inspect the completed Adjacent Arrangement, BellSouth will complete its inspection within fifteen (15) calendar days after receipt of written notification of completion of the enclosure from BLC Management. BellSouth shall require BLC Management to remove or correct within seven (7) calendar days, at BLC Management's expense, any structure

that does not meet its submitted plans and specifications or BellSouth's Specifications, as applicable.

3.4.3 BLC Management shall provide a concrete pad, the structure housing the arrangement, heating/ventilation/air conditioning (HVAC), lighting, and all of the facilities that are required to connect the structure (i.e., racking, conduits, etc.) to the BellSouth point of demarcation. At BLC Management's option, and where the local authority having jurisdiction permits, BellSouth shall provide an AC power source and access to physical collocation services and facilities, subject to the same nondiscriminatory requirements as those applicable to any other physical collocation arrangement. In Alabama and Louisiana, BellSouth will provide DC power to Adjacent Collocation sites where technically feasible, as that term has been defined by the FCC, subject to individual case basis (ICB) pricing. BLC Management's BellSouth Certified Supplier shall be responsible, at BLC Management's sole expense, for filing and obtaining any and all necessary permits and/or licenses for an Adjacent Arrangement. BellSouth shall allow Shared Caged Collocation within an Adjacent Arrangement, pursuant to the terms and conditions set forth in Section 3.3 above.

3.5 Direct Connect. BellSouth will permit BLC Management to directly interconnect between its own virtual/physical Collocation Space within the same central office by utilizing a Direct Connect. BLC Management shall contract with a BellSouth Certified Supplier to place the Direct Connect, which shall be provisioned using facilities owned by BLC Management. BLC Management-provisioned DC's shall utilize BellSouth common cable support structure. There will be a recurring charge per linear foot, and a nonrecurring charge per cable, of the actual common cable support structure used by BLC Management to provision the Direct Connects between its virtual/physical Collocation Spaces. In those instances where BLC Management's virtual/physical Collocation Space is contiguous in the central office, BLC Management will have the option of using BLC Management's own technicians to deploy the Direct Connects using either electrical or optical facilities between its Collocation Spaces by constructing its own dedicated cable support structure. BLC Management will deploy such electrical or optical connections directly between its own facilities without being routed through BellSouth's equipment. BLC Management may not self-provision Direct Connects on any BellSouth distribution frame, POT, DSX (Digital System Cross-Connect) or LGX (Light Guide Cross-Connect). BLC Management is responsible for ensuring the integrity of the signal.

3.5.1 To place an order for Direct Connects, BLC Management must submit an Initial Application or Subsequent Application. If no modification to the Collocation Space is requested other than the placement of Direct Connects, the Subsequent Application Fee for Direct Connects, as defined in Exhibit B, will apply. If other modifications, in addition to the placement of Direct Connects are requested, either an Initial Application Fee or Subsequent Application Fee will apply, pursuant to Section 6.3.1 of this Attachment. This non-recurring fee will be billed by BellSouth on the date that BellSouth provides an Application Response to <customer short name>.

3.6 Co-Carrier Cross Connect (CCXC). The primary purpose of collocation is for a telecommunications carrier to interconnect with BellSouth's network or to access BellSouth's unbundled network elements for the provision of telecommunications services. BellSouth will permit BLC Management to interconnect between its virtual or physical collocation arrangement(s) and that (those) of another collocated telecommunications carrier within the same "BellSouth Premises". Both BLC Management's agreement and the other collocated telecommunications carrier's agreement must contain the CCXC rates, terms and conditions before BellSouth will permit the provisioning of CCXCs between the two collocated carriers. BLC Management is prohibited from using the Collocation Space for the sole or primary purpose of cross-connecting to other collocated telecommunications carriers.

3.6.1 BLC Management must contract with a BellSouth Certified Supplier to place the CCXC. The CCXC shall be provisioned using facilities owned by BLC Management. Such cross-connections to other collocated telecommunications carriers may be made using either electrical or optical facilities. BLC Management shall be responsible for providing a letter of authorization (LOA), with the application, to BellSouth from the other collocated telecommunications carrier to which it will be cross-connecting. The BLC Management-provisioned CCXC shall utilize BellSouth common cable support structure. There will be a recurring charge per linear foot, per cable, of common cable support structure used by BLC Management to provision the CCXC to the other collocated telecommunications carrier. In those instances where BLC Management's equipment and the equipment of the other collocated telecommunications carrier are located in contiguous caged Collocation Space, BLC Management may use its own technicians to install co-carrier cross connects using either electrical or optical facilities between the equipment of both collocated telecommunications carriers by constructing a dedicated cable support structure between the two contiguous cages. BLC Management shall deploy such electrical or optical cross-connections directly between its own facilities and the facilities of another collocated telecommunications carrier without being routed through BellSouth's equipment. BLC Management shall not provision CCXC on any BellSouth distribution frame, POT (Point of Termination) Bay, DSX (Digital System Cross-Connect) or LGX (Light Guide Cross-Connect). BLC Management is responsible for ensuring the integrity of the signal.

3.6.2 To place an order for CCXCs, BLC Management must submit an Initial Application or Subsequent Application to BellSouth. If no modification to the Collocation Space is requested other than the placement of CCXCs, the Subsequent Application Fee for CCXCs, as defined in Exhibit B, will apply. If other modifications, in addition to the placement of CCXCs, are requested, either an Initial Application or Subsequent Application Fee will apply, pursuant to Section 6.3.1 of this Attachment. BellSouth will bill this nonrecurring fee on the date that it provides an Application Response to BLC Management.

4. Occupancy

4.1 Occupancy. BellSouth will notify BLC Management in writing when the Collocation Space is ready for occupancy (Space Ready Date). BLC Management will schedule and complete an acceptance walkthrough of the Collocation Space with BellSouth within fifteen (15) calendar days of the Space Ready Date. BellSouth will correct any deviations in BLC Management's original or jointly amended application requirements within seven (7) calendar days after the walkthrough, unless the Parties mutually agree upon a different time frame. BellSouth will then establish a new Space Ready Date. Another acceptance walkthrough will be scheduled and conducted within fifteen (15) calendar days of the new Space Ready Date. This follow-up acceptance walkthrough will be limited to only those items identified in the initial walkthrough. If BLC Management completes its acceptance walkthrough within the fifteen (15) calendar day interval, billing will begin upon the date of BLC Management's acceptance of the Collocation Space (Space Acceptance Date). In the event BLC Management fails to complete an acceptance walkthrough within this fifteen (15) calendar day interval, the Collocation Space shall be deemed accepted by BLC Management on the Space Ready Date and billing will commence from that date. If BLC Management decides to occupy the space prior to the Space Ready Date, the date BLC Management occupies the space is deemed the new Space Acceptance Date and billing will begin from that date. BLC Management must notify BellSouth in writing that its collocation equipment installation is complete and operational with BellSouth's network. BellSouth may, at its discretion, refuse to accept any orders for cross-connects until it has received such notice. For the purposes of this paragraph, BLC Management's telecommunications equipment will be deemed operational when it has been cross-connected to BellSouth's network for the purpose of provisioning telecommunication services to its customers.

4.2 Termination of Occupancy. In addition to any other provisions addressing termination of occupancy in this Agreement, BLC Management may terminate its occupancy of a particular Collocation Space by submitting a Subsequent Application requesting termination of occupancy. Such termination shall be effective upon BellSouth's acceptance of the Space Relinquishment Form. Billing for monthly recurring charges will cease on the date that BLC Management and BellSouth conduct an inspection of the terminated space and jointly sign off on the Space Relinquishment Form or on the date that BLC Management signs off on the Space Relinquishment Form and sends this form to BellSouth, provided no discrepancies are found during BellSouth's subsequent inspection of the terminated space. If the subsequent inspection by BellSouth reveals discrepancies, billing will cease on the date that BellSouth and BLC Management jointly conduct an inspection, confirming that BLC Management has corrected all of the noted discrepancies identified by BellSouth. A Subsequent Application Fee will not apply for the termination of occupancy; however, specific disconnect fees may apply to certain rate elements in Alabama, Florida, Georgia, Kentucky, Mississippi, South Carolina and Tennessee. The particular disconnect fees that would apply in each state are contained in Exhibit B of this Attachment. BellSouth may terminate BLC Management's right to occupy Collocation Space in the

event BLC Management fails to comply with any provision of this Agreement, including payment of the applicable fees contained in Exhibit B of this Attachment.

4.2.1 Upon termination of occupancy, BLC Management, at its sole expense, shall remove its equipment and any other property owned, leased or controlled by the BLC Management from the Collocation Space. BLC Management shall have thirty (30) calendar days from the Bona Fide Firm Order (BFFO) date ("Termination Date") to complete such removal, including the removal of all equipment and facilities of BLC Management's Guest(s), unless BLC Management's Guest(s) has assumed responsibility for the Collocation Space housing the Guest(s)'s equipment and executed the appropriate documentation required by BellSouth prior to the BLC Management removal date. BLC Management shall continue the payment of all monthly recurring charges to BellSouth until the date BLC Management, and if applicable BLC Management's Guest(s), has fully vacated the Collocation Space and the Space Relinquishment Form has been accepted by BellSouth. If BLC Management or BLC Management's Guest(s) fails to vacate the Collocation Space within thirty (30) calendar days from the "Termination Date", BellSouth shall have the right to remove and dispose of the equipment and any other property of BLC Management or BLC Management's Guest(s), in any manner that BellSouth deems fit, at BLC Management's expense and with no liability whatsoever for BLC Management's property or BLC Management's Guest(s)'s property. Upon termination of BLC Management's right to occupy specific Collocation Space, the Collocation Space will revert back to BellSouth's space inventory, and BLC Management shall surrender the Collocation Space to BellSouth in the same condition as when it was first occupied by BLC Management, with the exception of ordinary wear and tear, unless otherwise agreed to by the Parties. BLC Management's BellSouth Certified Supplier shall be responsible for updating and making any necessary changes to BellSouth's records as required by BellSouth's Specifications including, but not limited to, BellSouth's Central Office Record Drawings and ERMA Records. BLC Management shall be responsible for the cost of removing any BLC Management constructed enclosure, together with any supporting structures (e.g., racking, conduits, or power cables), by the "Termination Date" and restoring the grounds to their original condition.

5. Use of Collocation Space

5.1 Equipment Type. BellSouth permits the collocation of any equipment necessary for interconnection to BellSouth's network or access to BellSouth's unbundled network elements in the provision of telecommunications services, as the term "necessary" is defined by FCC 47 C.F.R. Section 51.323 (b). The primary purpose and function of any equipment collocated in a "BellSouth Premises" must be for interconnection to BellSouth's network or access to BellSouth's unbundled network elements in the provision of telecommunications services.

5.1.1 Examples of equipment that would not be considered necessary include, but are not limited to: traditional circuit switching equipment, equipment used exclusively for

call-related databases, computer servers used exclusively for providing information services, operations support system (OSS) equipment used to support collocated telecommunications carrier network operations, equipment that generates customer orders, manages trouble tickets or inventory, or stores customer records in centralized databases, etc. BellSouth will determine upon receipt of an application if the requested equipment is necessary based on the criteria established by the FCC. Multifunctional equipment placed on a "BellSouth Premises" must not place any greater relative burden on BellSouth's property than comparable single-function equipment. BellSouth reserves the right to permit collocation of any equipment on a nondiscriminatory basis.

5.1.2 Such equipment must, at a minimum, meet the following Telcordia Network Equipment Building Systems (NEBS) General Equipment Requirements: Criteria Level 1 requirements as outlined in Telcordia Special Report SR-3580, Issue 1. Except where otherwise required by a Commission, BellSouth shall comply with the applicable FCC rules relating to denial of collocation based on BLC Management's failure to comply with this Section.

5.1.3 BLC Management shall not request more DS0, DS1, DS3 and optical terminations for a collocation arrangement than the total port or termination capacity of the equipment physically installed in the arrangement. The total capacity of the equipment collocated in the arrangement will include equipment contained in an application, as well as equipment already placed in the collocation arrangement. If full network termination capacity of the equipment being installed is not requested in the application, additional network terminations for the installed equipment will require the submission of another application. In the event BLC Management submits an application for terminations that will exceed the total capacity of the collocated equipment, BLC Management will be informed of the discrepancy by BellSouth and required to submit a revision to the application.

Commencing with the most current calendar quarter after the effective date of this Attachment, and thereafter with respect to each subsequent calendar quarter during the term of this Attachment, BLC Management will, no later than thirty (30) days after the close of such calendar quarter, provide a report to ICS Collocation Product Management, Room 34A55, 675 W. Peachtree Street, Atlanta, Georgia 30375 listing any equipment in the Collocation Space (i) that was added during the calendar quarter to which such report pertains, and (ii) for which there is a UCC-1 lien holder or another entity that has a secured financial interest in such equipment. Equipment that satisfies both subparts (i) and (ii) of this section shall be defined as "Secured Equipment". If no Secured Equipment has been installed within a given calendar quarter, no report shall be due hereunder in connection with such calendar quarter.

5.2 BLC Management shall not use the Collocation Space for marketing purposes, nor shall it place any identifying signs or markings outside the Collocation Space or on the grounds of the "BellSouth Premises".

5.3 BLC Management shall place a plaque or affix other identification (e.g., stenciling) to BLC Management's equipment, including the appropriate emergency contacts with their corresponding telephone numbers, in order for BellSouth to properly identify BLC Management's equipment in the case of an emergency.

5.4 Entrance Facilities. BLC Management may elect to place BLC Management-owned or BLC Management-leased fiber entrance facilities into its Collocation Space. BellSouth will designate the point of interconnection in close proximity to the "BellSouth Premises" building housing the Collocation Space, such as at an entrance manhole or a cable vault, which are physically accessible by both Parties. BLC Management will provide and place fiber cable at the point of entrance of sufficient length to be pulled through conduit and into the splice location. BLC Management will provide and install a sufficient length of fire retardant riser cable, to which the entrance cable will be spliced by BellSouth. The fire retardant riser cable will extend from the splice location to BLC Management's equipment in the Collocation Space. In the event BLC Management utilizes a non-metallic, riser-type entrance facility, a splice will not be required. BLC Management must contact BellSouth for instructions prior to placing any entrance facility cable in the manhole. BLC Management is responsible for the maintenance of the entrance facilities. At BLC Management's option, BellSouth will accommodate, where technically feasible, a microwave entrance facility, pursuant to separately negotiated terms and conditions. In the case of adjacent collocation, copper facilities may be used between the adjacent collocation arrangement and the central office demarcation point unless BellSouth determines that limited space is available for the placement of entrance facilities.

5.5.1 Dual Entrance Facilities. BellSouth will provide at least two interconnection points at each Premise where at least two such interconnection points are available and capacity exists. Upon receipt of a request by BLC Management for dual entrance facilities to its physical Collocation Space, BellSouth shall provide BLC Management with information regarding BellSouth's capacity to accommodate the requested dual entrance facilities. If conduit in the serving manhole(s) is available and is not reserved for another purpose or for utilization within twelve (12) months of the receipt of an application for collocation, BellSouth will make the requested conduit space available for the installation of a second entrance facility to BLC Management's Collocation Space. The location of the serving manhole(s) will be determined at the sole discretion of BellSouth. Where dual entrance facilities are not available due to lack of capacity, BellSouth will provide this information to BLC Management in the Application Response.

5.5.2 Shared Use. BLC Management may utilize spare capacity on an existing interconnector's entrance facility for the purpose of providing an entrance facility to BLC Management's Collocation Space within the same "BellSouth Premises". BellSouth shall allow the splice, as long as the fiber is non-working fiber. BLC Management must arrange with BellSouth in accordance with BellSouth's Special Construction Procedures, RL93-11-030BT, and provide a LOA from the other telecommunications carrier authorizing BellSouth to perform the splice of the BLC

Management-provided riser cable to the spare capacity on the entrance facility. If BLC Management desires to allow another telecommunications carrier to use its entrance facilities, that other telecommunications carrier must arrange with BellSouth in accordance with BellSouth's Special Construction Procedures, RL93-11-030BT, and provide a LOA from <customer short name> authorizing BellSouth to perform the splice of that telecommunications carrier's provided riser cable to the spare capacity on BLC Management's entrance facility.

5.6 Demarcation Point. BellSouth will designate the point(s) of demarcation between BLC Management's equipment and/or network and BellSouth's network. Each Party will be responsible for the maintenance and operation of all equipment/facilities on its side of the demarcation point. For 2-wire and 4-wire connections to BellSouth's network, the demarcation point shall be a common block on BellSouth's designated conventional distributing frame (CDF). BLC Management shall be responsible for providing the necessary cabling, and BLC Management's BellSouth Certified Supplier shall be responsible for installing and properly labeling/stenciling the common block and any necessary cabling identified in Section 7 of this Attachment. BLC Management or its agent must perform all required maintenance to the equipment/facilities on its side of the demarcation point, pursuant to Section 5.7, following, and may self-provision cross-connects that may be required within its own Collocation Space to activate service requests.

5.6.1 In Tennessee, BellSouth will designate the point(s) of demarcation between BLC Management's equipment and/or network and BellSouth's network. Each Party will be responsible for the maintenance and operation of all equipment/facilities on its side of the demarcation point. For connections to BellSouth's network, the demarcation point shall be a BLC Management-provided Point of Termination Bay (POT Bay) in a common area within the "BellSouth Premises". BLC Management shall be responsible for providing, and BLC Management's BellSouth Certified Supplier shall be responsible for installing and properly labeling/stenciling the POT Bay, as well as installing the necessary cabling between BLC Management's Collocation Space and the demarcation point. BLC Management, its agent, or BLC Management's BellSouth Certified Supplier must perform all required maintenance to the equipment/facilities on its side of the demarcation point, pursuant to Section 5.7, following, and may self-provision cross-connects that may be required within its own Collocation Space to activate service requests. BellSouth will negotiate alternative rates, terms and conditions related to the demarcation point in Tennessee, if BLC Management desires to avoid the use of an intermediary device as contemplated by the Tennessee Regulatory Authority.

5.7 BLC Management's Equipment and Facilities. BLC Management, or if required by this Attachment, BLC Management's BellSouth Certified Supplier, is solely responsible for the design, engineering, installation, testing, provisioning, performance, monitoring, maintenance and repair of the equipment and facilities used by BLC Management which must be performed in compliance with all applicable BellSouth Specifications. Such equipment and facilities may include, but are not limited to,

cable(s), equipment, and point of termination connections. BLC Management and its designated BellSouth Certified Supplier must follow and comply with all BellSouth Specifications outlined in the following BellSouth Technical Requirements: TR 73503, TR 73519, TR 73572, and TR 73564.

5.8 BellSouth's Access to Collocation Space. From time to time, BellSouth may require access to BLC Management's Collocation Space. BellSouth retains the right to access BLC Management's space for the purpose of making BellSouth equipment and building modifications (e.g., running, altering or removing racking, ducts, electrical wiring, HVAC, and cabling). BellSouth will give notice to BLC Management at least forty-eight (48) hours before access to BLC Management's Collocation Space is required. BLC Management may elect to be present whenever BellSouth performs work in the BLC Management's Collocation Space. The Parties agree that BLC Management will not bear any of the expense associated with this type of work.

5.9 Access. Pursuant to Section 12, BLC Management shall have access to its Collocation Space twenty-four (24) hours a day, seven (7) days a week. BLC Management agrees to provide the name and social security number, date of birth, or driver's license number of each employee, supplier, or agent of BLC Management or BLC Management's Guest(s) that will be provided with access keys or cards (Access Keys), prior to the issuance of said Access Keys, using form RF-2906-C, the "CLEC and CLEC Certified Supplier Access Request and Acknowledgement" form. The appropriate key acknowledgement forms (the "Collocation Acknowledgement Sheet" for access cards and the "Key Acknowledgement Form" for keys) must be signed by BLC Management and returned to BellSouth Access Management within fifteen (15) calendar days of BLC Management's receipt. Failure to return these properly acknowledged forms will result in the holding of subsequent access key or card requests until the proper key acknowledgement documents have been received by BellSouth and reflect current information. Access Keys may not be duplicated under any circumstances. BLC Management agrees to be responsible for all Access Keys and for the return of all Access Keys in the possession of BLC Management's employees, suppliers, agents, or Guest(s) after termination of the employment relationship, the contractual obligation with BLC Management ends, upon the termination of this Attachment, or upon the termination of occupancy of Collocation Space in a specific "BellSouth Premises".

5.9.1 BellSouth will permit one (1) accompanied site visit to BLC Management's designated Collocation Space , after receipt of the BFFO, without charge to BLC Management. BLC Management must submit to BellSouth the completed Access Control Request Form for all employees or agents requiring access to a "BellSouth Premises" at least thirty (30) calendar days prior to the date BLC Management desires access to the Collocation Space. In order to permit reasonable access during construction of the Collocation Space, BLC Management may submit a request for its one (1) accompanied site visit to its designated Collocation Space at any time subsequent to BellSouth's receipt of the BFFO. In the event BLC Management desires access to the Collocation Space after submitting such a request, but prior to the approval of its

access request, in addition to the first accompanied free visit, BellSouth shall permit BLC Management to access the Collocation Space accompanied by a security escort, at BLC Management's expense, which will be assessed pursuant to the Security Escort fees contained in Exhibit B. BLC Management must request escorted access to its designated Collocation Space at least three (3) business days prior to the date such access is desired.

5.10 Lost or Stolen Access Devises. BLC Management shall immediately notify BellSouth in writing when any of its Access Keys have been lost or stolen. If it becomes necessary for BellSouth to re-key buildings or deactivate an Access card as a result of a lost or stolen Access Device(s) or for failure of BLC Management's employees, suppliers, agents or Guest(s) to return an Access Device(s), BLC Management shall pay for the costs of re-keying or deactivating the Access card pursuant to the fees set forth in Exhibit B.

5.11 Interference or Impairment. Notwithstanding any other provisions of this Attachment, BLC Management shall not use any product or service provided under this Agreement, any other service related thereto or used in combination therewith, or place or use any equipment or facilities in any manner that 1) significantly degrades, interferes with or impairs service provided by BellSouth or any other entity or any person's use of its telecommunications services; 2) endangers or damages the equipment, facilities or any other property of BellSouth or any other entity or person; 3) compromises the privacy of any communications; or 4) creates an unreasonable risk of injury or death to any individual or to the public. If BellSouth reasonably determines that any equipment or facilities of BLC Management violates the provisions of this paragraph, BellSouth shall provide written notice to BLC Management, which shall direct BLC Management to cure the violation within forty-eight (48) hours of BLC Management's receipt of written notice or, at a minimum, to commence curative measures within twenty-four (24) hours and exercise reasonable diligence to complete such measures as soon as possible thereafter. After receipt of the notice, the Parties agree to consult immediately and, if necessary, to conduct an inspection of the Collocation Space.

5.11.1 Except in the case of the deployment of an advanced service which significantly degrades the performance of other advanced services or traditional voice band services, if BLC Management fails to take curative action within forty-eight (48) hours or if the violation is of a character that poses an immediate and substantial threat of damage to property or injury or death to any person, or any other significant degradation, interference or impairment of BellSouth's or another entity's service, then and only in that event, BellSouth may take such action as it deems appropriate to correct the violation including, without limitation, the interruption of electrical power to BLC Management's equipment and/or facilities. BellSouth will endeavor, but is not required, to provide notice to BLC Management prior to the taking of such action and BellSouth shall have no liability to BLC Management for any damages arising from such action, except to the extent that such action by BellSouth constitutes willful misconduct.

5.11.2 For purposes of this Section, the term "significantly degrades" shall be defined as an action that noticeably impairs a service from a user's perspective. In the case of the deployment of an advanced service which significantly degrades the performance of other advanced services or traditional voice band services and BLC Management fails to take curative action within forty-eight (48) hours of BLC Management's receipt of written notice, BellSouth will establish before the appropriate Commission that the technology deployment is causing the significant degradation. Any claims of network harm presented to BLC Management or, if subsequently necessary, the Commission must be provided by BellSouth with specific and verifiable information. When BellSouth demonstrates that a certain technology deployed by BLC Management is significantly degrading the performance of other advanced services or traditional voice band services, BLC Management shall discontinue deployment of that technology and migrate its customers to other technologies that will not significantly degrade the performance of such services. Where the only degraded service itself is a known disturber, and the newly deployed technology satisfies at least one of the criteria for a presumption that it is acceptable for deployment under Section 47 C.F.R. 51.230, the degraded service shall not prevail against the newly-deployed technology.

5.12 Personalty and its Removal. Facilities and equipment placed by BLC Management in the Collocation Space shall not become a part of the Collocation Space, even if nailed, screwed or otherwise fastened to the Collocation Space, but shall retain their status as personal property and may be removed by BLC Management at any time. Any damage caused to the Collocation Space by BLC Management's employees, suppliers, agents or representatives during the installation or removal of such property shall be promptly repaired by BLC Management at its sole expense. If BLC Management decides to remove equipment from its Collocation Space and the removal requires no physical work be performed by BellSouth and BLC Management's physical work includes, but is not limited to, power reduction, cross-connects, or tie pairs, BellSouth will bill BLC Management an Administrative Only Application Fee as set forth in Exhibit B. This non-recurring fee will be billed on the date that BellSouth provides an Application Response to BLC Management.

5.13 Alterations. Under no condition shall BLC Management or any person acting on behalf of BLC Management make any rearrangement, modification, augment, improvement, addition, and/or other alteration which could affect in any way space, power, HVAC, and/or safety considerations to the Collocation Space or the "BellSouth Premises", without the express written consent of BellSouth, which shall not be unreasonably withheld. The cost of any such rearrangement, modification, augment, improvement, addition, and/or other alteration shall be paid by BLC Management, and shall require a Subsequent Application and will result in the assessment of either a Subsequent Application Fee, an Administrative Only Application Fee or an Initial Application Fee as set forth in Section 6.3.1, which will be billed by BellSouth on the date that BellSouth provides BLC Management with an Application Response.

5.14 Janitorial Service. BLC Management shall be responsible for the general upkeep of its Collocation Space. BLC Management shall arrange directly with a BellSouth Certified Supplier for janitorial services applicable to Caged Collocation Space. BellSouth shall provide a list of such suppliers on a ”BellSouth Premises”-specific basis, upon request.

6. Ordering and Preparation of Collocation Space

6.1 If any state or federal regulatory agency imposes procedures or intervals applicable to BLC Management and BellSouth that are different from the procedures or intervals set forth in this Section, whether now in effect or that become effective after execution of this Agreement, those procedures or intervals shall supersede the requirements set forth herein for that jurisdiction for all applications that are submitted for the first time after the effective date thereof.

6.2 Initial Application. For BLC Management’s or BLC Management’s Guest’s(s’) initial equipment placement, BLC Management shall input a Physical Expanded Interconnection Application Document (Initial Application) directly into BellSouth’s electronic application (e.App) system for processing. The Initial Application is considered Bona Fide when it is complete and accurate, meaning that all of the required fields on the application are completed with the appropriate type of information. An application fee will apply to each application submitted by BLC Management and will be billed by BellSouth on the date BellSouth provides BLC Management with an Application Response.

6.3 Subsequent Application. In the event BLC Management or BLC Management’s Guest(s) desires to modify its use of the Collocation Space after a BFFO, BLC Management shall complete an application (Subsequent Application) that contains all of the detailed information associated with the alteration related to the Collocation Space, as defined in Section 5.13 of this Attachment. The Subsequent Application will be considered Bona Fide when it is complete and accurate, meaning that all of the required fields on the Subsequent Application are completed with the appropriate type of information associated with the alteration. BellSouth shall determine what modifications, if any, to the “BellSouth Premises” are required to accommodate the change requested by BLC Management in the application. Such modifications to the “BellSouth Premises” may include, but are not limited to, floor loading changes, changes necessary to meet HVAC requirements, changes to power plant requirements, equipment additions, etc.

6.3.1 Subsequent Application Fee. The application fee paid by BLC Management shall be dependent upon the level of assessment needed. If the modifications reflected on the Subsequent Application require no labor or capital expenditure by BellSouth, but BellSouth must perform an assessment of the application to evaluate whether or not BellSouth would be required to perform necessary infrastructure or provisioning activities, then an Administrative Only Application Fee shall apply. This Administrative Only Application Fee would be applicable in instances such as those associated with a Transfer of Ownership of the Collocation Space, Removal of

Equipment from the Collocation Space, a modification to an application prior to receipt of the BFFO and a V-to-P Conversion (In Place). The fee for a Subsequent Application in which the modifications requested have limited effect (e.g., requires labor expenditure but no capital expenditure by BellSouth and where sufficient cable support structure, HVAC, power and terminations are available) shall be the Subsequent Application Fee, as set forth in Exhibit B. A modification involving a capital expenditure by BellSouth shall require BLC Management to submit the Subsequent Application with an Initial Application Fee. The appropriate nonrecurring application fee will be billed on the date BellSouth provides BLC Management with an Application Response.

6.4 Space Preferences. If BLC Management has previously requested and received a Space Availability Report for the "BellSouth Premises", BLC Management may submit up to three (3) space preferences on its application by identifying the specific space identification numbers referenced on the Space Availability Report for the space it is requesting. In the event BellSouth cannot accommodate the BLC Management's preference(s), BLC Management may accept the space allocated by BellSouth or cancel its application and submit another application requesting additional space preferences for the same central office. This application will be treated as a new application and an application fee will apply. The application fee will be billed by BellSouth on the date that BellSouth provides BLC Management with an Application Response.

6.5 Space Availability Notification.

6.5.1 Unless otherwise specified, BellSouth will respond to an application within ten (10) calendar days as to whether space is available or not available within the requested "BellSouth Premises". BellSouth will also respond as to whether the application is Bona Fide and if it is not Bona Fide, the items/revisions necessary to cause the application to become Bona Fide. If the amount of space requested is not available, BellSouth will notify BLC Management of the amount of space that is available and no application fee will apply. When BellSouth's response includes an amount of space less than that requested by BLC Management or space that is configured differently, no application fee will apply. If BLC Management decides to accept the available space, BLC Management must resubmit its application to reflect the actual space available, including the configuration of the space, prior to submitting a BFFO. When BLC Management resubmits its application to accept the available space, BellSouth will bill BLC Management the appropriate application fee.

6.5.2 BellSouth will respond to a Florida or Tennessee application within fifteen (15) calendar days as to whether space is available or not available within a "BellSouth Premises". BellSouth will also respond as to whether the application is Bona Fide and if it is not Bona Fide, the items/revisions necessary to cause the application to become Bona Fide. If a lesser amount of space than requested is available, BellSouth will provide an Application Response for the amount of space that is available and bill BLC Management an appropriate application fee on the date that BellSouth provides the

Application Response. When BellSouth's Application Response includes an amount of space less than that requested by BLC Management or space that is configured differently, if BLC Management decides to accept the available space, BLC Management must amend its application to reflect the actual space available, including the configuration of the space, prior to submitting a BFFO.

6.5.3 Denial of Application. If BellSouth notifies BLC Management that no space is available (Denial of Application), BellSouth will not assess an application fee to BLC Management. After notifying BLC Management that there is no available space in the requested "BellSouth Premises", BellSouth will allow BLC Management, upon request, to tour the entire "BellSouth Premises" within ten (10) calendar days of such Denial of Application. In order to schedule this tour within ten (10) calendar days, BellSouth must receive the request for a tour of the "BellSouth Premises" within five (5) calendar days of the Denial of Application.

6.6 Filing of Petition for Waiver. Upon Denial of Application, BellSouth will timely file a petition with the appropriate Commission pursuant to 47 U.S.C. § 251(c)(6). BellSouth shall provide to the Commission any information requested by that Commission. Such information shall include which space, if any, BellSouth or any of BellSouth's affiliates have reserved for future use and a detailed description of the specific future uses for which the space has been reserved. Subject to an appropriate nondisclosure agreement or provision, BellSouth shall permit BLC Management to inspect any floor plans or diagrams that BellSouth provides to the Commission.

6.7 Waiting List. On a first-come, first-served basis, which is governed by the date of receipt of an application or Letter of Intent, BellSouth will maintain a waiting list of requesting telecommunication carriers that have either received a Denial of Application or, where it is publicly known that the "BellSouth Premises" is out of space, have submitted a Letter of Intent to collocate in that "BellSouth Premises". BellSouth will notify each telecommunication carrier on the waiting list that can be accommodated by the amount of space that becomes available, according to the position of the telecommunication carrier on said waiting list.

6.7.1 In Florida, on a first-come, first-served basis, which is governed by the date of receipt of an application or Letter of Intent, BellSouth will maintain a waiting list of requesting telecommunication carriers that have either received a Denial of Application or, where it is publicly known that the "BellSouth Premises" is out of space, have submitted a Letter of Intent to collocate in that "BellSouth Premises". Sixty (60) calendar days prior to space becoming available, if known, BellSouth will notify the Commission and the telecommunication carriers on the waiting list by mail when space becomes available according to the position of each telecommunication carrier on said waiting list. If BellSouth does not know sixty (60) calendar days in advance of when space will become available, BellSouth will notify the Commission and the telecommunication carriers on the waiting list within two (2) business days of the determination that space will become available. A telecommunication carrier that, upon denial of physical Collocation Space, requests virtual Collocation Space shall

automatically be placed on the waiting list for physical Collocation Space that may become available in the future.

6.7.2 When physical Collocation Space becomes available, BLC Management must submit an updated, complete, and accurate application to BellSouth within thirty (30) calendar days of notification by BellSouth that physical Collocation Space will be available in the requested "BellSouth Premises" previously out of space. If BLC Management has originally requested caged Collocation Space and cageless Collocation Space becomes available, BLC Management may refuse such space and notify BellSouth in writing within the thirty (30) day timeframe that BLC Management wants to maintain its place on the waiting list for caged Physical Collocation Space, without accepting the available cageless Collocation Space.

BLC Management may accept an amount of space less than what it originally requested by submitting an application as set forth above, and upon request, may maintain its position on the waiting list for the remaining space that was initially requested. If BLC Management does not submit an application or notify BellSouth in writing as described above, BellSouth will offer the space to the next telecommunication carrier on the waiting list and remove BLC Management from the waiting list. Upon request, BellSouth will advise BLC Management as to its position on the waiting list.

6.8 Public Notification. BellSouth will maintain on its Interconnection Services website a notification document that will indicate all "BellSouth Premises" that are without available space. BellSouth shall update such document within ten (10) calendar days of the date that BellSouth becomes aware that insufficient space is available to accommodate physical collocation. BellSouth will also post a document on its Interconnection Services website that contains a general notice when space becomes available in a "BellSouth Premises" previously on the space exhaust list.

6.9 Application Response.

6.9.1 In Alabama, Georgia, Kentucky, Louisiana, Mississippi, North Carolina, and South Carolina, when space has been determined to be available for physical (caged or cageless) arrangements, BellSouth will provide an Application Response within twenty (20) calendar days of receipt of a Bona Fide Application. The Application Response will include, at a minimum, the configuration of the space, the Cable Installation Fee, Cable Records Fee, and any other applicable space preparation fees, as described in Section 8.

6.9.2 In Florida and Tennessee, within fifteen (15) calendar days of receipt of a Bona Fide Application, when space has been determined to be available or when a lesser amount of space than that requested is available, then with respect to the space available, BellSouth will provide an Application Response including sufficient information to enable BLC Management to place a firm order. The Application Response will include, at a minimum, the configuration of the space, the Cable Installation Fee, Cable

Records Fee, and the space preparation fees, as described in Section 8. When BLC Management submits ten (10) or more applications within ten (10) calendar days, the initial fifteen (15) calendar day response interval will increase by ten (10) calendar days for every additional ten (10) applications or fraction thereof.

6.10 Application Modifications.

6.10.1 If a modification or revision is made to any information in the Bona Fide Application prior to a BFFO, with the exception of modifications to Customer Information, Contact Information or Billing Contact Information, at the request of BLC Management, or as necessitated by technical considerations, the application shall be considered a new application and handled as a new application with respect to the response and provisioning intervals. BellSouth will charge BLC Management the appropriate application fee associated with the level of assessment performed by BellSouth. If the modification requires no labor or capital expenditure by BellSouth, but BellSouth must perform an assessment of the application to evaluate whether or not BellSouth would be required to perform necessary infrastructure or provisioning activities, then an Administrative Only Application Fee shall apply. The fee for an application modification in which the modification requested has limited effect (e.g., requires labor expenditure but no capital expenditure by BellSouth and where sufficient cable support structure, HVAC, power and terminations are available) shall be the Subsequent Application Fee as set forth in Exhibit B. A modification involving a capital expenditure by BellSouth shall require BLC Management to submit the application with an Initial Application Fee. The appropriate nonrecurring application fee will be billed on the date BellSouth provides BLC Management with an Application Response.

6.11 Bona Fide Firm Order.

6.11.1 BLC Management shall indicate its intent to proceed with equipment installation in a "BellSouth Premises" by submitting a Bona Fide Firm Order (BFFO) to BellSouth. The BFFO must be received by BellSouth no later than thirty (30) calendar days after BellSouth's Application Response to BLC Management's Bona Fide Application or BLC Management's application will expire.

6.11.2 BellSouth will establish a firm order date based upon the date BellSouth is in receipt of BLC Management's BFFO. BellSouth will acknowledge the receipt of BLC Management's BFFO within seven (7) calendar days of receipt, so that BLC Management will have positive confirmation from BellSouth that its BFFO has been received. BellSouth's response to a BFFO will include a Firm Order Confirmation, which contains the firm order date. No revisions can be made to a BFFO.

7. Construction and Provisioning

7.1 Construction and Provisioning Intervals.

7.1.1 In Florida and Tennessee, BellSouth will complete construction of physical Collocation Space as soon as possible within a maximum of ninety (90) calendar days from receipt of a BFFO or as agreed to by the Parties. For virtual Collocation Space, BellSouth will complete construction as soon as possible within a maximum of sixty (60) calendar days from receipt of a BFFO or as agreed to by the Parties. For Augments requested to Collocation Space after the initial space has been completed, BellSouth will complete construction for Collocation Space as soon as possible within a maximum of forty-five (45) calendar days from receipt of a BFFO or as agreed to by the Parties. If BellSouth does not believe that construction will be completed within the relevant provisioning interval and BellSouth and BLC Management cannot agree upon a completion date, within forty-five (45) calendar days of receipt of the BFFO for an initial request, or within thirty (30) calendar days of receipt of the BFFO for an Augment, BellSouth may seek an extension from the Commission.

7.1.2 In Alabama, Georgia, Kentucky, Louisiana, Mississippi, North Carolina, and South Carolina, BellSouth will complete construction for physical caged Collocation Space under ordinary conditions as soon as possible within a maximum of ninety (90) calendar days from receipt of a BFFO or as agreed to by the Parties. BellSouth will complete construction for physical cageless Collocation Space under ordinary conditions as soon as possible within a maximum of sixty (60) calendar days from receipt of a BFFO and ninety (90) calendar days from receipt of a BFFO for extraordinary conditions, or as agreed to by the Parties. Ordinary conditions are defined as space available with only minor changes required to BellSouth's support systems (Examples include, but are not limited to: minor modifications to HVAC, cabling and BellSouth's power plant). Extraordinary conditions include, but may not be limited to: major BellSouth equipment rearrangements or additions; power plant additions or upgrades; major mechanical additions or upgrades; major upgrades for ADA compliance; environmental hazards or hazardous materials abatement; and arrangements for which equipment shipping intervals are extraordinary in length. The Parties may mutually agree to renegotiate an alternative provisioning interval or BellSouth may seek a waiver from the ordered interval from the appropriate Commission.

7.1.3 When BLC Management adds equipment within initial demand parameters that requires no additional space preparation work on the part of BellSouth, then no additional charges or intervals will be imposed by BellSouth that would cause delay in BLC Management's operation.

7.1.4 In the states of Alabama, Georgia, Kentucky, Louisiana, Mississippi, North Carolina, and South Carolina, BellSouth will provide the reduced intervals outlined below to BLC Management, when BLC Management requests an augment that is identified in Sections 7.1.4.1, 7.1.4.2, 7.1.4.3, 7.1.4.4 and 7.1.4.5 ("Augment") after the Space Ready Date for existing physical Collocation Space. Unless otherwise set forth in Section 7.1.4.10, any such augment application will require a Subsequent Application and will result in the assessment of an Augment Application fee as set forth in Exhibit B.

7.1.4.1 Simple Augments will be completed within twenty (20) calendar days after receipt of the BFFO for an:

- Extension of Existing AC Circuit Capacity within Arrangement Where Sufficient Circuit Capacity is Available
- Fuse Change and/or Increase or Decrease -48V DC Power from Existing ILEC BDFB

7.1.4.2 Minor Augments will be completed within forty-five (45) calendar days after receipt of the BFFO for:

- 168 DS1s Terminations at the ILEC Demarcation Frame (Databasing Only; Panels, Relay Racks and Overhead Racking Exist)
- 96 DS3s Terminations at the ILEC Demarcation Frame (Databasing Only; Panels, Relay Racks and Overhead Racking Exist)
- 99 Fiber Terminations at the ILEC Demarcation Frame (Databasing Only; Panels, Relay Racks and Overhead Racking Exist)
- Maximum of 2000 Service Ready DS0 Terminations at the ILEC Demarcation Frame (Databasing Only; Panels, Relay Racks and Overhead Racking Exist)

7.1.4.3 Intermediate Augments will be completed within sixty (60) calendar days after receipt of the BFFO for:

- 168 DS1s (Databasing and Installation of Termination Panels, Relay Racks or Additional Structure as Required)
- 96 DS3s (Databasing and Installation of Termination Panels, Relay Racks or Additional Structure as Required)
- 99 Fiber Terminations (Databasing and Installation of Termination Panels, Relay Racks or Additional Structure as Required)
- 2000 DS0s (Databasing and Installation of Termination Panels, Relay Racks or Additional Structure as Required)
- Installation of Cable Racking or Other Support Structures as Required to Support Co-Carrier Cross Connects (Adequate Floor or Ceiling Structural Capacity Exists and Support/Protection Structure for Fiber Patch Cord is Excluded)

7.1.4.4 Major Augments of physical Collocation Space will be completed within ninety (90) calendar days after BFFO. This category includes all requests for additional physical Collocation Space (caged or cageless).

7.1.4.5 Major Augments of virtual Collocation Space will be completed within seventy-five (75) calendar days after BFFO. This category includes all requests for additional virtual Collocation Space.

7.1.4.6 If BLC Management submits an augment application request that includes two augment items from the same category in either Section 7.1.4.1, 7.1.4.2, or7.1.4.3 above, the provisioning interval associated with the next highest augment category will

apply (e.g., if two items from the minor augment category are requested on the same request, then an interval of sixty (60) calendar days from the receipt of the BFFO would apply, which is the interval associated with the intermediate category).

7.1.4.7 If BLC Management submits an augment application request that includes three augment items from the same category in either Section 7.1.4.1, 7.1.4.2, or7.1.4.3 above, the major augment interval of ninety (90) calendar days from the receipt of the BFFO would apply (e.g., if three items from the simple augment category are requested on the same request for a physical collocation arrangement, then an interval of ninety (90) calendar days from the receipt of the BFFO would apply, which is the major physical augment interval; likewise if three items from the simple augment category are requested on the same request for a virtual collocation arrangement, then an interval of seventy-five (75) calendar days from the receipt of the BFFO would apply, which is the major virtual augment interval).

7.1.4.8 If BLC Management submits an augment application request that includes one augment item from two separate categories in Sections 7.1.4.1, 7.1.4.2 and 7.1.4.3 above, the augment interval associated with the highest augment category will apply (e.g., if an item from the minor augment category and an item from the intermediate augment category are requested on the same request, then an interval of sixty (60) calendar days from the receipt of the BFFO would apply, which is the interval associated with the intermediate augment category).

7.1.4.9 All Augments not expressly included in the Simple, Minor, Intermediate or Major categories, as outlined above, will be placed into the appropriate category as negotiated by BLC Management and BellSouth. If BLC Management and BellSouth are unable to determine the appropriate category through negotiation, then the appropriate major augment category, identified in Section 7.1.4.4 and Section 7.1.4.5, would apply based on whether the augment request is for BLC Management's physical or virtual Collocation Space.

7.1.4.10 Individual application fees associated with simple, minor and intermediate augment applications are contained in Exhibit B. The appropriate application fee will be assessed to BLC Management at the time BellSouth provides BLC Management with the Application Response. BLC Management will be assessed a Subsequent Application Fee for all Major Augment applications (Major Augments are defined above in Sections 7.1.4.4 and 7.1.4.5). The Subsequent Application Fee is also reflected in Exhibit B of this Attachment.

7.2 Joint Planning. Joint planning between BellSouth and BLC Management will commence within a maximum of twenty (20) calendar days from BellSouth's receipt of a BFFO. BellSouth will provide the preliminary design of the Collocation Space and the equipment configuration requirements as reflected in the Bona Fide Application and BFFO. The Collocation Space completion interval will be provided to BLC Management during the joint planning meeting.

7.3 Permits. Each Party, its agent(s) or BellSouth Certified Supplier(s) will file for the appropriate permits required for the scope of work to be performed by that Party, its agent(s) or BellSouth Certified Supplier(s) within ten (10) calendar days of the completion of the finalized construction design and specifications.

7.4 Acceptance Walkthrough. BLC Management will schedule and complete an acceptance walkthrough of the Collocation Space with BellSouth within fifteen (15) calendar days after the Space Ready Date. In the event BLC Management fails to complete an acceptance walkthrough within this fifteen (15) day interval, the Collocation Space shall be deemed accepted by BLC Management on the Space Ready Date. BellSouth will correct any deviations to BLC Management's original or jointly amended design and/or specification requirements within seven (7) calendar days after the walkthrough, unless the Parties mutually agree upon a different timeframe.

7.5 Circuit Facility Assignments (CFAs). Unless otherwise specified, BellSouth will provide CFAs to BLC Management prior to the applicable provisioning interval set forth herein (Provisioning Interval) for those "BellSouth Premises" in which BLC Management has physical Collocation Space with no POT bay or with a grand fathered POT bay provided by BellSouth. BellSouth cannot provide CFAs to BLC Management prior to the Provisioning Interval for those "BellSouth Premises" in which BLC Management has physical Collocation Space with a POT bay provided by BLC Management or virtual Collocation Space, until BLC Management provides BellSouth with the following information:

For physical Collocation Space with a BLC Management-provided POT bay, BLC Management shall provide BellSouth with a complete layout of the POT panels on an equipment inventory update (EIU) form, showing locations, speeds, etc.

For virtual Collocation Space, BLC Management shall provide BellSouth with a complete layout of BLC Management's equipment on an equipment inventory update (EIU) form, including the locations of the low speed ports and the specific frame terminations to which the equipment will be wired by BLC Management's BellSouth Certified Supplier.

7.5.1 BellSouth cannot begin work on the CFAs until the complete and accurate EIU form is received from BLC Management. If the EIU form is provided within ten (10) calendar days prior to the ending date of the Provisioning Interval, then the CFAs will be made available by the ending date of the Provisioning Interval. If the EIU form is not received ten (10) calendar days prior to the ending date of the Provisioning Interval, then the CFAs will be provided within ten (10) calendar days of receipt of the EIU form.

7.5.2 BellSouth will bill BLC Management a nonrecurring charge, as set forth in Exhibit B, each time BLC Management requests a resend of its CFAs for any reason other than a BellSouth error in the CFAs initially provided to BLC Management.

7.6 Use of BellSouth Certified Supplier. BLC Management shall select a supplier which has been approved as a BellSouth Certified Supplier to perform all engineering and installation work. BLC Management and BLC Management's BellSouth Certified Supplier must follow and comply with all of BellSouth's Specifications, as outlined in the following BellSouth Technical Requirements: TR 73503, TR 73519, TR 73572, and TR 73564. In some cases, BLC Management must select different BellSouth Certified Suppliers for those work activities associated with transmission equipment, switching equipment and power equipment. BellSouth shall provide BLC Management with a list of BellSouth Certified Suppliers upon request. The BellSouth Certified Supplier(s) shall be responsible for installing BLC Management's equipment and associated components, extending power cabling to the BellSouth power distribution frame, performing operational tests after installation is completed, and notifying BellSouth's equipment engineers and BLC Management upon successful completion of the installation, etc. The BellSouth Certified Supplier shall bill BLC Management directly for all work performed for BLC Management pursuant to this Attachment. BellSouth shall have no liability for, nor responsibility to pay, such charges imposed by BLC Management's BellSouth Certified Supplier. BellSouth shall make available its supplier certification program to BLC Management or any supplier proposed by BLC Management and will not unreasonably withhold certification. All work performed by or for BLC Management shall conform to generally accepted industry standards.

7.7 Alarm and Monitoring. BellSouth shall place environmental alarms in the "BellSouth Premises" for the protection of BellSouth equipment and facilities. BLC Management shall be responsible for the placement, monitoring and removal of environmental and equipment alarms used to service BLC Management's Collocation Space. Upon request, BellSouth will provide BLC Management with an applicable tariffed service(s) to facilitate remote monitoring of collocated equipment by BLC Management. Both Parties shall use best efforts to notify the other of any verified environmental condition known to that Party.

7.8 Virtual to Physical Collocation Relocation. In the event physical Collocation Space was previously denied at a "BellSouth Premises" due to technical reasons or space limitations and physical Collocation Space has subsequently become available, BLC Management may relocate its existing virtual collocation arrangement(s) to a physical collocation arrangement(s) and pay the appropriate fees associated with physical Collocation Space and the rearrangement or reconfiguration of services currently being terminated in the virtual collocation arrangement If BellSouth knows when additional space for physical collocation may become available at the "BellSouth Premises" requested by BLC Management, such information will be provided to BLC Management in BellSouth's written denial of physical Collocation Space. To the extent that (i) physical Collocation Space becomes available to BLC Management within one hundred eighty (180) calendar days of BellSouth's written denial of BLC Management's request for physical Collocation Space, (ii) BellSouth had knowledge that the space was going to become available, and (iii) BLC Management was not informed in the written denial that physical Collocation Space would become available

within such one hundred eighty (180) calendar day period, then BLC Management may relocate its virtual collocation arrangement to a physical collocation arrangement and will receive a credit for any nonrecurring charges previously paid for such virtual Collocation Space. BLC Management must arrange with a BellSouth Certified Supplier for the relocation of equipment from its virtual Collocation Space to its physical Collocation Space and will bear the cost of such relocation.

7.8.1 In Alabama, BellSouth will complete a relocation from virtual Collocation Space to cageless physical Collocation Space within thirty (30) calendar days and from virtual Collocation Space to caged physical Collocation Space within ninety (90) calendar days.

7.9 Virtual to Physical Conversion (In-Place). Virtual collocation arrangements may be converted to "in-place" physical collocation arrangements if the potential conversion meets all of the following criteria: 1) there is no change in the amount of equipment or the configuration of the equipment that was in the virtual Collocation Space; 2) the conversion of the virtual collocation arrangement will not cause the equipment or the results of that conversion to be located in a space that BellSouth has reserved for its own future needs; 3) the converted arrangement does not limit BellSouth's ability to secure its own equipment and facilities due to the location of the virtual Collocation Space; and 4) any changes to the arrangement can be accommodated by existing power, HVAC, and other requirements. Unless otherwise specified, BellSouth will complete virtual to physical conversions (in-place) within sixty (60) calendar days from receipt of the BFFO. BellSouth will bill BLC Management an Administrative Only Application Fee, as set forth in Exhibit B, on the date BellSouth provides an Application Response to BLC Management.

7.9.1 In Alabama and Tennessee, BellSouth will complete Virtual to Physical Conversions (In Place) within thirty (30) calendar days from receipt of the BFFO.

7.10 Cancellation. If at any time prior to space acceptance, BLC Management cancels its order for Collocation Space (Cancellation), BellSouth will bill the applicable nonrecurring charge(s) for any and all work processes for which work has begun or been completed. In Georgia, if BLC Management cancels its order for Collocation Space at any time prior to space acceptance, BellSouth will bill BLC Management for all costs incurred prior to the date of Cancellation and for any costs incurred as a direct result of the Cancellation, not to exceed the total amount that would have been due had the firm order not been cancelled.

7.11 Licenses. BLC Management, at its own expense, will be solely responsible for obtaining from the proper governmental authorities, and any other appropriate agency, entity, or person, all rights, privileges, permits, licenses, and certificates necessary or required to operate as a provider of telecommunication services to the public or to build-out, equip and/or occupy Collocation Space in a "BellSouth Premises".

7.12 Environmental Compliance. The Parties agree to utilize and adhere to the Environmental Hazard Guidelines identified in Exhibit A attached hereto.

8. Rates and Charges

8.1 Application Fee. BellSouth shall assess a nonrecurring application fee via a service order on the date BellSouth responds pursuant to Section 6.10 (Application Response).

8.1.1 In Tennessee, the application fee for caged Collocation Space is the planning fee for both Initial Applications and Subsequent Applications placed by BLC Management. Likewise, for cageless Collocation Space, the same Cageless - Application Fee applies for both Initial Applications and Subsequent Applications placed by BLC Management. BellSouth will bill the appropriate nonrecurring application fee on the date that BellSouth provides an Application Response to BLC Management.

8.2 Cable Installation. Cable Installation Fee(s) are assessed per entrance cable placed. This nonrecurring fee will be billed by BellSouth upon receipt of BLC Management's BFFO.

8.3 Recurring Charges. If BLC Management has met the applicable fifteen (15) calendar day walkthrough interval specified in Section 4, billing for recurring charges will begin upon the Space Acceptance Date. In the event that BLC Management fails to complete an acceptance walkthrough within the applicable fifteen (15) calendar day interval, billing for recurring charges will commence on the Space Ready Date. If BLC Management occupies the space prior to the Space Ready Date, the date BLC Management occupies the space is deemed the new Space Acceptance Date and billing for recurring charges will begin on that date.

8.4 Space Preparation. Space preparation fees consist of a nonrecurring charge for Firm Order Processing and monthly recurring charges for Central Office Modifications assessed per arrangement, per square foot and Common Systems Modifications assessed per arrangement, per square foot for cageless collocation and per cage for caged collocation. BLC Management shall remit payment of the nonrecurring Firm Order Processing fee coincident with the submission of a BFFO. These charges recover the costs associated with preparing the Collocation Space, which includes, but is not limited to, the following items: a survey, engineering of the Collocation Space, design and modification costs for network, building and support systems, etc. In the event BLC Management opts for cageless space, the space preparation fees will be assessed based on the total square footage of floor space dedicated to BLC Management as prescribed in this Section.

8.5 Floor Space. The Floor Space Charge includes reasonable charges for lighting, HVAC, and other allocated expenses associated with maintenance of the "BellSouth Premises", but does not include any power-related costs incurred by BellSouth. When the Collocation Space is enclosed, BLC Management shall pay floor space charges based upon the number of square feet so enclosed. The minimum size for caged Collocation Space is 100 square feet. Additional caged Collocation Space may be requested in increments of 50 square feet. When the Collocation Space is not enclosed, BLC Management shall pay floor space charges based upon the following

floor space calculation: [(depth of the equipment lineup in which the rack is placed) + (0.5 x maintenance aisle depth) + (0.5 x wiring aisle depth)] x (width of rack and spacers). For purposes of this calculation, the depth of the equipment lineup shall consider the footprint of equipment racks plus any equipment overhang. BellSouth will assign unenclosed Collocation Space in conventional equipment rack lineups where feasible. In the event BLC Management's collocated equipment requires special cable racking, isolated grounding or other treatment which prevents placement within conventional equipment rack lineups, BLC Management shall be required to request an amount of floor space sufficient to accommodate the total equipment arrangement.

8.6 Power. BellSouth shall make available –48 Volt (-48V) Direct Current (DC) power for BLC Management's Collocation Space at a BellSouth Power Board or BellSouth Battery Distribution Fuse Bay (BDFB) upon BLC Management's request within the "BellSouth Premises"; however, the determination of whether BellSouth will permit the power configuration requested by BLC Management will be made at BellSouth's sole discretion, which shall not be unreasonably withheld. BellSouth will revise BLC Management's recurring power charges to reflect a power upgrade upon notification of the completion of the upgrade by BLC Management's BellSouth Certified Vendor. BellSouth will revise recurring power charges to reflect a power reduction upon BellSouth's receipt of the Power Reduction Form from BLC Management certifying the completion of the power reduction work, including the removal of the power cabling by BLC Management's BellSouth Certified Supplier.

8.6.1 When obtaining power from a BDFB, fuses and power cables (A&B) must be engineered (sized), and installed by BLC Management's BellSouth Certified Supplier. Likewise, when obtaining power from a BellSouth power board, power cables (A&B) must be engineered (sized) and installed by BLC Management's BellSouth Certified Supplier. BLC Management is responsible for contracting with a BellSouth Certified Supplier for the power distribution feeder cable running from a BellSouth BDFB or BellSouth power board to BLC Management's equipment. The determination of whether BLC Management's requested DC power will be provided from the BellSouth BDFB or BellSouth power board will be made at BellSouth's sole, but reasonable, discretion. The BellSouth Certified Supplier contracted by BLC Management must provide BellSouth with a copy of the engineering power specifications prior to the day on which BLC Management's equipment becomes operational (Commencement Date). BellSouth will provide the common power feeder cable support structure between the BellSouth BDFB or BellSouth power board and BLC Management's Collocation Space. BLC Management shall contract with a BellSouth Certified Supplier who will be responsible for the following power provisioning activities: installing, removing or replacing dedicated power cable support structure within BLC Management's arrangement, power cable feeds, and terminations of cable. A BellSouth Certified Supplier must perform all terminations at a BellSouth power board. BLC Management shall comply with all applicable National Electric Code (NEC), BellSouth TR73503, Telcordia and ANSI Standards regarding power cabling, installation, and maintenance.

8.6.2 If BLC Management elects to install its own DC Power Plant, BellSouth shall provide Alternating Current (AC) power to feed BLC Management's DC Power Plant. Charges for AC power will be assessed per breaker ampere per month. Rates include the provision of commercial and standby AC power. When obtaining power from a BellSouth service panel, protection devices and power cables must be engineered (sized) and installed by BLC Management's BellSouth Certified Supplier, except that BellSouth shall engineer and install protection devices and power cables for Adjacent Collocation. BLC Management's BellSouth Certified Supplier must also provide a copy of the engineering power Specifications prior to the Commencement Date. Charges for AC power shall be assessed pursuant to the rates specified in Exhibit B. AC power voltage and phase ratings shall be determined on a per location basis. At BLC Management's option, BLC Management may arrange for AC power in an adjacent collocation arrangement from a retail provider of electrical power.

8.6.3 In Tennessee, monthly recurring charges for -48V DC power consumption will be assessed per ampere per month based upon the engineered and installed power feed fused ampere capacity. Rates include redundant feeder fuse positions (A&B) and common cable racks to BLC Management's equipment or space enclosure. BLC Management shall contract with a BellSouth Certified Supplier to perform the installation and removal of dedicated power cable support structure within BLC Management's arrangement and terminations of cable within the Collocation Space.

8.6.3.1 In Tennessee, nonrecurring charges for –48V DC power distribution will be based on the costs associated with collocation power plant investment and the associated infrastructure.

8.6.4 In Alabama and Louisiana, BLC Management has the option to purchase power directly from an electric utility company. Under such an option, BLC Management is responsible for contracting with the electric utility company for its own power feed and meter and is financially responsible for purchasing all equipment necessary to accomplish the arrangement, including inverters, batteries, power boards, bus bars, BDFBs, backup power supplies and cabling. The actual work to install this arrangement must be performed by a BellSouth Certified Supplier hired by BLC Management. BLC Management's BellSouth Certified Supplier must comply with all applicable safety codes, including the National Electric Safety Codes, in the installation of this power arrangement. If BLC Management previously had power supplied by BellSouth, BLC Management may request to change its Collocation Space to obtain power from an electric utility company by submitting a Subsequent Application. BellSouth will waive the application fee for this Subsequent Application if no other changes are requested therein. Any floor space, cable racking, etc. utilized by BLC Management in provisioning said power will be billed on an ICB basis.

8.6.5 In South Carolina, BLC Management has the option to purchase power directly from an electric utility company where technically feasible and where space is available in a requested "BellSouth Premises". Under such option, BLC Management is responsible for contracting with the electric utility company for its own power feed and meter and

is financially responsible for purchasing all equipment necessary to accomplish the arrangement, including inverters, batteries, power boards, bus bars, BDFBs, backup power supplies and power cabling. The actual work to install this arrangement must be performed by a BellSouth Certified Supplier hired by BLC Management. BLC Management's BellSouth Certified Supplier must comply with all applicable national, regional, state and local safety, electrical, fire and building codes, including the National Electric Safety Code standards, in the installation of this power arrangement, just as BellSouth is required to comply with these codes. BLC Management must submit an application to BellSouth for the appropriate amount of Collocation Space that BLC Management requires to install this type of power arrangement. BellSouth will evaluate the request and determine if the appropriate amount of space is available within the office for the installation of BLC Management's power equipment and facilities. This type of power arrangement must be located in an appropriate area in the central office that has been properly conditioned for the installation of power equipment and conforms to the applicable national, regional, state and local safety, electrical, fire and building codes. BellSouth shall waive the application fee or any other nonrecurring charges that would otherwise be due from a CLEC that decides to reconfigure an existing collocation power arrangement to purchase power directly from an electric utility company as provided herein. BLC Management shall be responsible for the recurring charges associated with the central office space needed for this type of power arrangement, including space required to place associated power-related equipment and facilities (i.e., batteries, generator, power meter, etc.). If there is no space available for this type of power arrangement in the requested central office, BellSouth may seek a waiver of these requirements from the Commission for the central office requested. BLC Management would still retain the option of ordering its power needs directly from BellSouth.

8.6.6 If BLC Management desire to reduce the amount of power that it has requested from BellSouth, BLC Management must submit a Subsequent Application for this power reduction. If no other modifications to the Collocation Space are requested other than the reduction in power, the Power Reduction Only, Application fee, as set forth in Exhibit B, will apply. If other modifications are requested in addition to the reduction of power, the Subsequent Application Fee will apply. BellSouth will bill the appropriate nonrecurring application fee on the date BellSouth provides an Application Response to BLC Management.

8.6.7 In Alabama and Louisiana, if BLC Management is currently served from the BellSouth main power board and requests that its power be reconfigured to connect to a BellSouth BDFB in a specific central office, BLC Management must submit a Subsequent Application to BellSouth. A response to such application will be provided by BellSouth within seven (7) calendar days and no application fee will apply for the initial power reduction at each "BellSouth Premises" in which BLC Management is currently collocated.

8.7 Security Escort. A security escort will be required whenever BLC Management or its approved agent desires access to the entrance manhole or must have access to a

"BellSouth Premises" after the one (1) accompanied site visit allowed pursuant to Section 5.9 prior to completing BellSouth's Security Training requirements. The rates for security escort service are assessed, beginning with the scheduled escort time, pursuant to the fee schedule in Exhibit B. BellSouth will wait for one-half (1/2) hour after the scheduled time for such an escort and BLC Management shall pay for such half-hour charges in the event BLC Management fails to show up.

8.8 Cable Record charges. These charges apply for work required to add or change existing cable records assigned to BLC Management in BellSouth's database systems. The VG/DS0 per cable record charge is for a maximum of 3600 records. The Fiber cable record charge is for a maximum of 99 records. The Cable Record charges are assessed as nonrecurring fees in all BellSouth states, other than Louisiana, and will be billed upon receipt of BLC Management's BFFO. In Louisiana, the Cable Record charges are assessed on a monthly recurring basis and will be billed upon receipt of BLC Management's BFFO.

8.9 Other. If no rate is identified in the contract, the rate for the specific service or function will be negotiated by the Parties upon request by either Party.

9. Insurance

9.1 BLC Management shall, at its sole cost and expense, procure, maintain, and keep in force insurance as specified in this Section and underwritten by insurance companies licensed to do business in the states applicable under this Agreement and having a Best's Insurance Rating of A-.

9.2 BLC Management shall maintain the following specific coverage:

9.2.1 Commercial General Liability coverage in the amount of ten million dollars ($10,000,000.00) or a combination of Commercial General Liability and Excess/Umbrella coverage totaling not less than ten million dollars ($10,000,000.00). BellSouth shall be named as an Additional Insured on the Commercial General Liability policy as specified herein.

9.2.2 Statutory Workers Compensation coverage and Employers Liability coverage in the amount of one hundred thousand dollars ($100,000.00) each accident, one hundred thousand dollars ($100,000.00) each employee by disease, and five hundred thousand dollars ($500,000.00) policy limit by disease.

9.2.3 All Risk Property coverage on a full replacement cost basis insuring all of BLC Management's real and personal property situated on or within BellSouth's Central Office location(s).

9.2.4 BLC Management may elect to purchase business interruption and contingent business interruption insurance, having been advised that BellSouth assumes no liability for loss of profit or revenues should an interruption of service occur.

9.3 The limits set forth in Section 9.2 above may be increased by BellSouth from time to time during the term of this Agreement upon thirty (30) calendar days notice to BLC Management to at least such minimum limits as shall then be customary with respect to comparable occupancy of BellSouth structures.

9.4 All policies purchased by BLC Management shall be deemed to be primary and not contributing to or in excess of any similar coverage purchased by BellSouth. All insurance must be in effect on or before the date equipment is delivered to BellSouth's Premises and shall remain in effect for the term of this Attachment or until all BLC Management's property has been removed from BellSouth's Premises, whichever period is longer. If BLC Management fails to maintain required coverage, BellSouth may pay the premiums thereon and seek reimbursement of same from BLC Management.

9.5 BLC Management shall submit certificates of insurance reflecting the coverage required pursuant to this Section a minimum of ten (10) business days prior to the commencement of any work in the Collocation Space. Failure to meet this interval may result in construction and equipment installation delays. BLC Management shall arrange for BellSouth to receive thirty (30) business days' advance notice of cancellation from BLC Management's insurance company. BLC Management shall forward a certificate of insurance and notice of cancellation/non-renewal to BellSouth at the following address:

BellSouth Telecommunications, Inc.
Attn.: Risk Management Coordinator
17H53 BellSouth Center
675 W. Peachtree Street
Atlanta, Georgia 30375

9.6 BLC Management must conform to recommendations made by BellSouth's fire insurance company to the extent BellSouth has agreed to, or shall hereafter agree to, such recommendations.

9.7 Self-Insurance. If BLC Management's net worth exceeds five hundred million dollars ($500,000,000), BLC Management may elect to request self-insurance status in lieu of obtaining any of the insurance required in Sections 9.2.1 and 9.2.2. BLC Management shall provide audited financial statements to BellSouth thirty (30) calendar days prior to the commencement of any work in the Collocation Space. BellSouth shall then review such audited financial statements and respond in writing to BLC Management in the event that self-insurance status is not granted to BLC Management. If BellSouth approves BLC Management for self-insurance, BLC Management shall annually furnish to BellSouth, and keep current, evidence of such net worth that is attested to by one of BLC Management's corporate officers. The ability to self-insure shall continue so long as the BLC Management meets all of the requirements of this Section. If BLC Management subsequently no longer satisfies this Section, BLC Management is required to purchase insurance as indicated by Sections 9.2.1 and 9.2.2.

9.8 The net worth requirements set forth in Section 9.7 may be increased by BellSouth from time to time during the term of this Attachment upon thirty (30) calendar days' notice to BLC Management to at least such minimum limits as shall then be customary with respect to comparable occupancy of BellSouth structures.

9.9 Failure to comply with the provisions of this Section will be deemed a material breach of this Attachment.

10. Mechanics Liens

10.1 If any mechanics lien or other liens shall be filed against property of either Party (BellSouth or BLC Management), or any improvement thereon by reason of or arising out of any labor or materials furnished or alleged to have been furnished or to be furnished to or for the other Party or by reason of any changes, or additions to said property made at the request or under the direction of the other Party, the other Party directing or requesting those changes shall, within thirty (30) business days after receipt of written notice from the Party against whose property said lien has been filed, either pay such lien or cause the same to be bonded off the affected property in the manner provided by law. The Party causing said lien to be placed against the property of the other shall also defend, at its sole cost and expense, on behalf of the other, any action, suit or proceeding which may be brought for the enforcement of such liens and shall pay any damage and discharge any judgment entered thereon.

11. Inspections

11.1 BellSouth may conduct an inspection of BLC Management's equipment and facilities in the Collocation Space(s) prior to the activation of facilities between BLC Management's equipment and equipment of BellSouth. BellSouth may conduct an inspection if BLC Management adds equipment and may otherwise conduct routine inspections at reasonable intervals mutually agreed upon by the Parties. BellSouth shall provide BLC Management with a minimum of forty-eight (48) hours or two (2) business days, whichever is greater, advance notice of all such inspections. All costs of such inspection shall be borne by BellSouth.

12. Security and Safety Requirements

12.1 Unless otherwise specified, BLC Management will be required, at its own expense, to conduct a statewide investigation of criminal history records for each BLC Management employee hired in the past five years being considered for work on the "BellSouth Premises", for the states/counties where the BLC Management employee has worked and lived for the past five years. Where state law does not permit statewide collection or reporting, an investigation of the applicable counties is acceptable. BLC Management shall not be required to perform this investigation if an affiliated company of BLC Management has performed an investigation of the BLC

Management employee seeking access, if such investigation meets the criteria set forth above. This requirement will not apply if BLC Management has performed a pre-employment statewide investigation of criminal history records of the BLC Management employee for the states/counties where the BLC Management employee has worked and lived for the past five years or, where state law does not permit a statewide investigation, an investigation of the applicable counties.

12.2 BLC Management will be required to administer to its personnel assigned to the "BellSouth Premises" security training either provided by BellSouth, or meeting criteria defined by BellSouth.

12.3 BLC Management shall provide its employees and agents with picture identification, which must be worn and visible at all times while in the Collocation Space or other areas in or around the "BellSouth Premises". The photo identification card shall bear, at a minimum, the employee's name and photo and BLC Management's name. BellSouth reserves the right to remove from a "BellSouth Premises" any employee of BLC Management not possessing identification issued by BLC Management or who has violated any of BellSouth's policies as outlined in the CLEC Security Training documents. BLC Management shall not hold BellSouth harmless for any damages resulting from such removal of its personnel from a "BellSouth Premises". BLC Management shall be solely responsible for ensuring that any Guest(s) of BLC Management is in compliance with all subsections of this Section.

12.4 BLC Management shall not assign to the "BellSouth Premises" any personnel with records of felony criminal convictions. BLC Management shall not assign to the "BellSouth Premises" any personnel with records of misdemeanor convictions, except for misdemeanor traffic violations, without advising BellSouth of the nature and gravity of the offense(s). BellSouth reserves the right to refuse building access to any BLC Management personnel who have been identified to have misdemeanor criminal convictions. Notwithstanding the foregoing, in the event that BLC Management chooses not to advise BellSouth of the nature and gravity of any misdemeanor conviction, BLC Management may, in the alternative, certify to BellSouth that it shall not assign to the "BellSouth Premises" any personnel with records of misdemeanor convictions (other than misdemeanor traffic violations).

12.4.1 BLC Management shall not knowingly assign to the "BellSouth Premises" any individual who was a former employee of BellSouth and whose employment with BellSouth was terminated for a criminal offense whether or not BellSouth sought prosecution of the individual for the criminal offense.

12.4.2 BLC Management shall not knowingly assign to the "BellSouth Premises" any individual who was a former supplier of BellSouth and whose access to a "BellSouth Premises" was revoked due to commission of a criminal offense whether or not BellSouth sought prosecution of the individual for the criminal offense.

12.5 For each BLC Management employee or agent hired by BLC Management within five years of being considered for work on the "BellSouth Premises", who requires access

to a "BellSouth Premises" pursuant to this Attachment, BLC Management shall furnish BellSouth, prior to an employee or agent gaining such access, a certification that the aforementioned background check and security training were completed. The certification will contain a statement that no felony convictions were found and certify that the employee completed the security training. If the employee's criminal history includes misdemeanor convictions, BLC Management will disclose the nature of the convictions to BellSouth at that time. In the alternative, BLC Management may certify to BellSouth that it shall not assign to the "BellSouth Premises" any personnel with records of misdemeanor convictions other than misdemeanor traffic violations.

12.5.1 For all other BLC Management employees requiring access to a "BellSouth Premises" pursuant to this Attachment, BLC Management shall furnish BellSouth, prior to an employee gaining such access, a certification that the employee is not subject to the requirements of Section 12.5 above and that security training was completed by the employee.

12.6 At BellSouth's request, BLC Management shall promptly remove from the "BellSouth Premises" any employee of BLC Management BellSouth does not wish to grant access to a "BellSouth Premises" 1) pursuant to any investigation conducted by BellSouth or 2) prior to the initiation of an investigation if an employee of BLC Management is found interfering with the property or personnel of BellSouth or another collocated telecommunications carrier, provided that an investigation shall promptly be commenced by BellSouth.

12.7 Security Violations. BellSouth reserves the right to interview BLC Management's employees, agents, or suppliers in the event of wrongdoing in or around BellSouth's property or involving BellSouth's or another collocated telecommunications carrier's property or personnel, provided that BellSouth shall provide reasonable notice to BLC Management's Security representative of such interview. BLC Management and its suppliers shall reasonably cooperate with BellSouth's investigation into allegations of wrongdoing or criminal conduct committed by, witnessed by, or involving BLC Management's employees, agents, or suppliers. Additionally, BellSouth reserves the right to bill BLC Management for all reasonable costs associated with investigations involving its employees, agents, or suppliers if it is established and mutually agreed in good faith that BLC Management's employees, agents, or suppliers are responsible for the alleged act. BellSouth shall bill BLC Management for BellSouth property, which is stolen or damaged where an investigation determines the culpability of BLC Management's employees, agents, or suppliers and where BLC Management agrees, in good faith, with the results of such investigation. BLC Management shall notify BellSouth in writing immediately in the event that BLC Management discovers one of its employees already working on the "BellSouth Premises" is a possible security risk. Upon request of the other Party, the Party who is the employer shall discipline consistent with its employment practices, up to and including removal from BellSouth's Premises, any employee found to have violated the security and safety requirements of this Section. BLC Management shall not hold BellSouth harmless for

any damages resulting from such removal of its personnel from a "BellSouth Premises".

12.8 Use of Supplies. Unauthorized use of equipment, supplies or other property by either Party, whether or not used routinely to provide telephone service will be strictly prohibited and handled appropriately. Costs associated with such unauthorized use may be charged to the offending Party, as may be all associated investigative costs.

12.9 Use of Official Lines. Except for non-toll calls necessary in the performance of their work, neither Party shall use the telephones of the other Party on BellSouth's Premises. Charges for unauthorized telephone calls may be charged to the offending Party, as may be all associated investigative costs.

12.10 Accountability. Full compliance with the Security requirements of this Section shall in no way limit the accountability of either Party to the other for the improper actions of its employees.

13. Destruction of Collocation Space

13.1 In the event a Collocation Space is wholly or partially damaged by fire, windstorm, tornado, flood or by similar causes to such an extent as to be rendered wholly unsuitable for BLC Management's permitted use hereunder, then either Party may elect within ten (10) calendar days after such damage, to terminate occupancy of the damaged Collocation Space, and if either Party shall so elect, by giving the other written notice of termination, both Parties shall stand released of and from further liability under the terms hereof. If the Collocation Space shall suffer only minor damage and shall not be rendered wholly unsuitable for BLC Management's permitted use, or is damaged and the option to terminate is not exercised by either Party, BellSouth covenants and agrees to proceed promptly without expense to BLC Management, except for improvements not to the property of BellSouth, to repair the damage. BellSouth shall have a reasonable time within which to rebuild or make any repairs, and such rebuilding and repairing shall be subject to delays caused by storms, shortages of labor and materials, government regulations, strikes, walkouts, and causes beyond the control of BellSouth, which causes shall not be construed as limiting factors, but as exemplary only. BLC Management may, at its own expense, accelerate the rebuild of its collocated space and equipment provided however that a BellSouth Certified Supplier is used and the necessary space preparation has been completed. If BLC Management's acceleration of the project increases the cost of the project, then those additional charges will be incurred by BLC Management. Where allowed and where practical, BLC Management may erect a temporary facility while BellSouth rebuilds or makes repairs. In all cases where the Collocation Space shall be rebuilt or repaired, BLC Management shall be entitled to an equitable abatement of rent and other charges, depending upon the unsuitability of the Collocation Space for BLC Management's permitted use, until such Collocation Space is fully repaired and restored and BLC Management's equipment installed therein (but in no event later than thirty (30) calendar days after the Collocation Space is fully repaired and restored).

Where BLC Management has placed an Adjacent Arrangement pursuant to Section 3.4, BLC Management shall have the sole responsibility to repair or replace said Adjacent Arrangement provided herein. Pursuant to this Section, BellSouth will restore the associated services to the Adjacent Arrangement.

14. Eminent Domain

14.1 If the whole of a Collocation Space or Adjacent Arrangement shall be taken by any public authority under the power of eminent domain, then this Attachment shall terminate with respect to such Collocation Space or Adjacent Arrangement as of the day possession shall be taken by such public authority and rent and other charges for the Collocation Space or Adjacent Arrangement shall be paid up to that day with proportionate refund by BellSouth of such rent and charges as may have been paid in advance for a period subsequent to the date of the taking. If any part of the Collocation Space or Adjacent Arrangement shall be taken under eminent domain, BellSouth and BLC Management shall each have the right to terminate this Attachment with respect to such Collocation Space or Adjacent Arrangement and declare the same null and void, by written notice of such intention to the other Party within ten (10) calendar days after such taking.

15. Nonexclusivity

15.1 BLC Management understands that this Attachment is not exclusive and that BellSouth may enter into similar agreements with other Parties. Assignment of space pursuant to all such agreements shall be determined by space availability and made on a first come, first served basis

ENVIRONMENTAL AND SAFETY PRINCIPLES

The following principles provide basic guidance on environmental and safety issues when applying for and establishing Physical Collocation arrangements.

1. GENERAL PRINCIPLES

1.1 Compliance with Applicable Law. BellSouth and BLC Management agree to comply with applicable federal, state, and local environmental and safety laws and regulations including U.S. Environmental Protection Agency (USEPA) regulations issued under the Clean Air Act (CAA), Clean Water Act (CWA), Resource Conservation and Recovery Act (RCRA), Comprehensive Environmental Response, Compensation and Liability Act (CERCLA), Superfund Amendments and Reauthorization Act (SARA), the Toxic Substances Control Act (TSCA), and OSHA regulations issued under the Occupational Safety and Health Act of 1970, as amended and NFPA and National Electrical Codes (NEC) and the NESC (Applicable Laws). Each Party shall notify the other if compliance inspections are conducted by regulatory agencies and/or citations are issued that relate to any aspect of this Attachment.

1.2 Notice. BellSouth and BLC Management shall provide notice to the other, including Material Safety Data Sheets (MSDSs), of known and recognized physical hazards or Hazardous Chemicals existing on site or brought on site. A Hazardous Chemical inventory list is posted on an OSHA Poster and updated annually at each Central Office. This Poster is normally located near the front entrance of the building or in the lounge area. Each Party is required to provide specific notice for known potential Imminent Danger conditions. BLC Management should contact 1-800-743-6737 for any BellSouth MSDS required.

1.3 Practices/Procedures. BellSouth may make available additional environmental control procedures for BLC Management to follow when working at a "BellSouth Premises" (See Section 2, below). These practices/procedures will represent the regular work practices required to be followed by the employees and suppliers of BellSouth for environmental protection. BLC Management will require its suppliers, agents and others accessing the "BellSouth Premises" to comply with these practices. Section 2 lists the Environmental categories where BST practices should be followed by BLC Management when operating in the "BellSouth Premises".

1.4 Environmental and Safety Inspections. BellSouth reserves the right to inspect the BLC Management space with proper notification. BellSouth reserves the right to stop any BLC Management work operation that imposes Imminent Danger to the environment, employees or other persons in the area on BellSouth's Premises.

1.5 Hazardous Materials Brought On Site. Any hazardous materials brought into, used, stored or abandoned at the "BellSouth Premises" by BLC Management are owned by BLC Management. BLC Management will indemnify BellSouth for claims, lawsuits or damages to persons or property caused by these materials. Without prior written BellSouth approval, no substantial new safety or environmental hazards can be created by BLC Management or different hazardous materials used by BLC Management at a "BellSouth Premises". BLC Management must demonstrate adequate

emergency response capabilities for its materials used or remaining at the "BellSouth Premises".

1.6 Spills and Releases. When contamination is discovered at a "BellSouth Premises", either Party discovering the condition must notify the other Party. All Spills or Releases of regulated materials will immediately be reported by BLC Management to BellSouth.

1.7 Coordinated Environmental Plans and Permits. BellSouth and BLC Management will coordinate plans, permits or information required to be submitted to government agencies, such as emergency response plans, spill prevention control and countermeasures (SPCC) plans and community reporting. If fees are associated with filing, BellSouth and BLC Management will develop a cost sharing procedure. If BellSouth's permit or EPA identification number must be used, BLC Management must comply with all of BellSouth's permit conditions and environmental processes, including environmental "best management practices (BMP)" (see Section 2, below) and/or selection of BST disposition vendors and disposal sites.

1.8 Environmental and Safety Indemnification. BellSouth and BLC Management shall indemnify, defend and hold harmless the other Party from and against any claims (including, without limitation, third-party claims for personal injury or death or real or personal property damage), judgments, damages (including direct and indirect damages and punitive damages), penalties, fines, forfeitures, costs, liabilities, interest and losses arising in connection with the violation or alleged violation of any Applicable Law or contractual obligation or the presence or alleged presence of contamination arising out of the acts or omissions of the indemnifying Party, its agents, suppliers, or employees concerning its operations at the "BellSouth Premises".

2. CATEGORIES FOR CONSIDERATION OF ENVIRONMENTAL ISSUES

2.1 When performing functions that fall under the following Environmental categories on BellSouth's Premises, BLC Management agrees to comply with the applicable sections of the current issue of BellSouth's Environmental and Safety Methods and Procedures (M&Ps), incorporated herein by this reference. BLC Management further agrees to cooperate with BellSouth to ensure that BLC Management's employees, agents, and/or suppliers are knowledgeable of and satisfy those provisions of BellSouth's Environmental M&Ps which apply to the specific Environmental function being performed by BLC Management, its employees, agents and/or suppliers.

2.2 The most current version of the reference documentation must be requested from BLC Management's BellSouth Regional Contract Manager (RCM) (f/k/a Account Team Collocation Coordinator – ATCC).

ENVIRONMENTAL CATEGORIES	ENVIRONMENTAL ISSUES	ADDRESSED BY THE FOLLOWING DOCUMENTATION
Disposal of hazardous material or other regulated material (e.g., batteries, fluorescent tubes, solvents & cleaning materials)	Compliance with all applicable local, state, & federal laws and regulations Pollution liability insurance EVET approval of supplier	Std T&C 450 Fact Sheet Series 17000 Std T&C 660-3 Approved Environmental Vendor List (Contact RCM Representative)
Emergency response	Hazmat/waste release/spill fire safety emergency	Fact Sheet Series 17000 Building Emergency Operations Plan (EOP) (specific to and located on BellSouth's Premises)
Contract labor/outsourcing for services with environmental implications to be performed on "BellSouth Premises" (e.g., disposition of hazardous material/waste; maintenance of storage tanks)	Compliance with all applicable local, state, & federal laws and regulations Performance of services in accordance with BST's environmental M&Ps Insurance	Std T&C 450 Std T&C 450-B (Contact RCM Representative for copy of appropriate E/S M&Ps.) Std T&C 660
Transportation of hazardous material	Compliance with all applicable local, state, & federal laws and regulations Pollution liability insurance EVET approval of supplier	Std T&C 450 Fact Sheet Series 17000 Std T&C 660-3 Approved Environmental Vendor List (Contact RCM Representative)
Maintenance/operations work which may produce a waste Other maintenance work	Compliance with all applicable local, state, & federal laws and regulations Protection of BST employees and equipment	Std T&C 450 29CFR 1910.147 (OSHA Standard) 29CFR 1910 Subpart O

Version 3Q03: 11/12/2003

		(OSHA Standard)
Janitorial services	All waste removal and disposal must conform to all applicable federal, state and local regulations All Hazardous Material and Waste Asbestos notification and protection of employees and equipment	Procurement Manager (CRES Related Matters)-BST Supply Chain Services Fact Sheet Series 17000 GU-BTEN-001BT, Chapter 3 BSP 010-170-001BS (Hazcom)
Manhole cleaning	Compliance with all applicable local, state, & federal laws and regulations Pollution liability insurance EVET approval of supplier	Std T&C 450 Fact Sheet 14050 BSP 620-145-011PR Issue A, August 1996 Std T&C 660-3 Approved Environmental Vendor List (Contact RCM Representative)
Removing or disturbing building materials that may contain asbestos	Asbestos work practices	GU-BTEN-001BT, Chapter 3 For questions regarding removing or disturbing materials that contain asbestos, call the BellSouth Building Service Center: AL, MS, TN, KY & LA (local area code) 557-6194 FL, GA, NC & SC (local area code) 780-2740

3. DEFINITIONS

Generator. Under RCRA, the person whose act produces a Hazardous Waste, as defined in 40 CFR 261, or whose act first causes a Hazardous Waste to become subject to regulation. The Generator is legally responsible for the proper management and disposal of Hazardous Wastes in accordance with regulations.

Hazardous Chemical. As defined in the U.S. Occupational Safety and Health (OSHA) hazard communication standard (29 CFR 1910.1200), any chemical which is a health hazard or physical hazard.

Hazardous Waste. As defined in Section 1004 of RCRA.

Imminent Danger. Any conditions or practices at a "BellSouth Premises" which are such that a danger exists which could reasonably be expected to cause immediate death or serious harm to people or immediate significant damage to the environment or natural resources.

Spill or Release. As defined in Section 101 of CERCLA.

4. ACRONYMS

RCM – Regional Collocation Manager (f/k/a Account Team Collocation Coordinator)

BST – BellSouth Telecommunications

CRES – Corporate Real Estate and Services (formerly PS&M)

DEC/LDEC - Department Environmental Coordinator/Local Department Environmental Coordinator

E/S – Environmental/Safety

EVET - Environmental Vendor Evaluation Team

GU-BTEN-001BT - BellSouth Environmental Methods and Procedures

NESC - National Electrical Safety Codes

P&SM - Property & Services Management

Std T&C - Standard Terms & Conditions

Attachment 4

Remote Site Physical Collocation

BELLSOUTH

REMOTE SITE PHYSICAL COLLOCATION

1. Scope of Attachment

1.1 Scope of Attachment. The rates, terms, and conditions contained within this Attachment shall only apply when BLC Management is occupying the collocation space as a sole occupant or as a Host within a Remote Site Location ("Remote Collocation Space") pursuant to this Attachment.

1.2 Right to occupy. BellSouth shall offer to BLC Management Remote Collocation Space on rates, terms, and conditions that are just, reasonable, non-discriminatory and consistent with the rules of the Federal Communications Commission ("FCC"). Subject to the rates, terms, and conditions of this Attachment, where space is available and collocation is technically feasible, BellSouth will allow BLC Management to occupy that certain area designated by BellSouth within a BellSouth Remote Site Location, or on BellSouth property upon which the BellSouth Remote Site Location is located, of a size, which is specified by BLC Management and agreed to by BellSouth. BellSouth Remote Site Locations include cabinets, huts, and controlled environmental vaults owned or leased by BellSouth that house BellSouth Network Facilities. To the extent this Attachment does not include all the necessary rates, terms and conditions for BellSouth Remote Site Locations other than cabinets, huts and controlled environmental vaults, the Parties will negotiate said rates, terms, and conditions upon request for collocation at BellSouth Remote Site Locations other than those specified above.

1.3 Space Reservation.

1.3.1 In all states other than Florida, the number of racks/bays specified by BLC Management may contemplate a request for space sufficient to accommodate BLC Management's growth within a two-year period.

1.3.2 In the state of Florida, the number of racks/bays specified by BLC Management may contemplate a request for space sufficient to accommodate BLC Management's growth within an eighteen (18) month period.

1.3.3 Neither BellSouth nor any of BellSouth's affiliates may reserve space for future use on more preferential terms than those set forth above.

1.4 Third Party Property. If the Premises, or the property on which it is located, is leased by BellSouth from a Third Party or otherwise controlled by a Third Party, special

considerations and intervals may apply in addition to the terms and conditions of this Attachment. Additionally, where BellSouth notifies BLC Management that BellSouth's agreement with a Third Party does not grant BellSouth the ability to provide access and use rights to others, upon BLC Management's request, BellSouth will use its best efforts to obtain the owner's consent and to otherwise secure such rights for BLC Management. BLC Management agrees to reimburse BellSouth for the reasonable and demonstrable costs incurred by BellSouth in obtaining such rights for BLC Management. In cases where a Third Party agreement does not grant BellSouth the right to provide access and use rights to others as contemplated by this Attachment and BellSouth, despite its best efforts, is unable to secure such access and use rights for BLC Management as above, BLC Management shall be responsible for obtaining such permission to access and use such property. BellSouth shall cooperate with BLC Management in obtaining such permission.

1.5 Space Reclamation. In the event of space exhaust within a Remote Site Location, BellSouth may include in its documentation for the Petition for Waiver filing any unutilized space in the Remote Site Location. BLC Management will be responsible for any justification of unutilized space within its Remote Collocation Space, if the Commission requires such justification.

1.6 Use of Space. BLC Management shall use the Remote Collocation Space for the purposes of installing, maintaining and operating BLC Management's equipment (to include testing and monitoring equipment) necessary for interconnection with BellSouth services and facilities or for accessing BellSouth unbundled network elements (UNEs) for the provision of telecommunications services, as specifically set forth in this Agreement. The Remote Collocation Space may be used for no other purposes except as specifically described herein or in any amendment hereto.

1.7 Rates and charges. BLC Management agrees to pay the rates and charges identified in Exhibit B attached hereto.

1.8 If any due date contained in this Attachment falls on a weekend or National holiday, then the due date will be the next business day thereafter. For intervals of ten (10) calendar days or less National holidays will be excluded.

1.9 The Parties agree to comply with all applicable federal, state, county, local and administrative laws, rules, ordinances, regulations and codes in the performance of their obligations hereunder.

2. Space Availability Report

2.1 Space Availability Report. Upon request from BLC Management, BellSouth will provide a written report ("Space Availability Report"), describing in detail the space that is available for collocation and specifying the amount of Remote Collocation Space available at the Remote Site Location requested, the number of collocators

present at the Remote Site Location, any modifications in the use of the space since the last report on the Remote Site Location requested and the measures BellSouth is taking to make additional space available for collocation arrangements. A Space Availability Report does not reserve space at the Remote Site Location.

2.1.1 The request from BLC Management for a Space Availability Report must be written and must include the Common Language Location Identification ("CLLI") code for both the Remote Site Location and the serving wire center. The CLLI code information for the serving wire center is located in the National Exchange Carrier Association (NECA) Tariff FCC No. 4. If BLC Management is unable to obtain the CLLI code for the Remote Site Location from, for example, a site visit to the remote site, BLC Management may request the CLLI code from BellSouth. To obtain a CLLI code for a Remote Site Location directly from BellSouth, BLC Management should submit to BellSouth a Remote Site Interconnection Request for the serving wire center CLLI code prior to submitting its request for a Space Availability Report. BLC Management should complete all the requested information and submit the Request to BellSouth. BellSouth will bill the applicable fee upon receipt of the request.

2.1.2 BellSouth will respond to a request for a Space Availability Report for a particular Remote Site Location within ten (10) calendar days of receipt of such request. BellSouth will make best efforts to respond in ten (10) calendar days to such a request when the request includes from two (2) to five (5) Remote Site Locations within the same state. The response time for requests of more than five (5) Remote Site Locations shall be negotiated between the Parties. If BellSouth cannot meet the ten (10) calendar day response time, BellSouth shall notify BLC Management and inform BLC Management of the time frame under which it can respond.

2.2 Remote Terminal information. Upon request, BellSouth will provide BLC Management with the following information concerning BellSouth's remote terminals: (i) the address of the remote terminal; (ii) the CLLI code of the remote terminal; (iii) the carrier serving area of the remote terminal; (iv) the designation of which remote terminals subtend a particular central office; and (v) the number and address of customers that are served by a particular remote terminal.

2.2.1 BellSouth will provide this information on a first come, first served basis within thirty (30) calendar days of a BLC Management request subject to the following conditions: (i) the information will only be provided on a CD in the same format in which it appears in BellSouth's systems; (ii) the information will only be provided for each serving wire center designated by BLC Management, up to a maximum of thirty (30) wire centers per BLC Management request per month per state, and up to for a maximum of one hundred twenty (120) wire centers total per month per state for all CLECs; and (iii) BLC Management agrees to pay the costs incurred by BellSouth in providing the information.

3. Collocation Options

3.1 Cageless. BellSouth shall allow BLC Management to collocate BLC Management's equipment and facilities without requiring the construction of a cage or similar structure. BellSouth shall allow BLC Management to have direct access to BLC Management's equipment and facilities in accordance with Section 5.8. BellSouth shall make cageless collocation available in single rack/bay increments. Except where BLC Management's equipment requires special technical considerations (e.g., special cable racking or isolated ground plane), BellSouth shall assign cageless Remote Collocation Space in conventional equipment rack lineups where feasible. For equipment requiring special technical considerations, BLC Management must provide the equipment layout, including spatial dimensions for such equipment pursuant to generic requirements contained in Telcordia GR-63-Core, and shall be responsible for compliance with all special technical requirements associated with such equipment pursuant to Section 7.6 following.

3.2 Caged. At BLC Management's expense, BLC Management may arrange with a Supplier certified by BellSouth ("BellSouth Certified Supplier") to construct a collocation arrangement enclosure, where technically feasible as that term has been defined by the FCC, in accordance with BellSouth's Technical References (TR) ("Specifications") prior to starting equipment installation. BellSouth will provide Specifications upon request. BLC Management's BellSouth Certified Supplier shall be responsible for filing and receiving any and all necessary permits and/or licenses for such construction. BellSouth shall cooperate with BLC Management and provide, at BLC Management's expense, the documentation, including existing building architectural drawings, enclosure drawings, and Specifications required and necessary for BLC Management's BellSouth Certified Supplier to obtain the zoning, permits and/or other licenses. BLC Management's BellSouth Certified Supplier shall bill BLC Management directly for all work performed for BLC Management pursuant to this Attachment and BellSouth shall have no liability for nor responsibility to pay such charges imposed by BLC Management's BellSouth Certified Supplier. BLC Management must provide the local BellSouth Remote Site Location contact with two Access Keys used to enter the locked enclosure. Except in case of emergency, BellSouth will not access BLC Management's locked enclosure prior to notifying BLC Management at least forty-eight (48) hours before access to the Remote Site Location is required. Upon request, BellSouth shall construct the enclosure for BLC Management.

3.2.1 BellSouth may elect to review BLC Management's plans and specifications prior to allowing construction to start to ensure compliance with BellSouth's Specifications. Notification to BLC Management indicating BellSouth's desire to execute this review will be provided in BellSouth's response to the Application, if BLC Management has indicated their desire to construct their own enclosure. If BLC Management's Application does not indicate their desire to construct their own enclosure, but their firm order does indicate their desire to construct their own enclosure, then notification

to review will be given within ten (10) calendar days after the Firm Order date. BellSouth shall complete its review within fifteen (15) calendar days after the receipt of the plans and specifications. Regardless of whether or not BellSouth elects to review BLC Management's plans and specifications, BellSouth reserves the right to inspect the enclosure after construction to make sure it is constructed according to the submitted plans and specifications and/or BellSouth's Specifications, as applicable. BellSouth shall require BLC Management to remove or correct within seven (7) calendar days at BLC Management's expense any structure that does not meet these plans and specifications or, where applicable, BellSouth's Specifications.

3.3 Shared Collocation. BLC Management may allow other telecommunications carriers to share BLC Management's Remote Collocation Space pursuant to terms and conditions agreed to by BLC Management ("Host") and other telecommunications carriers ("Guests") and pursuant to this Section, except where the BellSouth Remote Site Location is located within a leased space and BellSouth is prohibited by said lease from offering such an option or is located on property for which BellSouth holds an easement and such easement does not permit such an option. BLC Management shall notify BellSouth in writing upon execution of any agreement between the Host and its Guest within ten (10) calendar days of its execution and prior to any Firm Order. Further, such notice shall include the name of the Guest(s) and the term of the agreement, and shall contain a certification by BLC Management that said agreement imposes upon the Guest(s) the same terms and conditions for Remote Collocation Space as set forth in this Attachment between BellSouth and BLC Management.

3.3.1 BLC Management, as the Host, shall be the sole interface and responsible Party to BellSouth for assessment of rates and charges contained within this Attachment and for the purposes of ensuring that the safety and security requirements of this Attachment are fully complied with by the Guest, its employees and agents. BellSouth shall provide BLC Management with a proration of the costs of the Remote Collocation Space based on the number of collocators and the space used by each with a minimum charge of one (1) bay/rack per Host/Guest. In those instances where the Host permits a Guest to use a shelf within the Host's bay, BellSouth will not prorate the cost of the bay. In all states other than Florida, and in addition to the foregoing, BLC Management shall be the responsible party to BellSouth for the purpose of submitting applications for bay/rack placement for the Guest. In Florida the Guest may directly submit bay/rack placement applications using the Host's access carrier name abbreviation (ACNA). A separate Guest application shall require the assessment of an Application Fee, as set forth in Exhibit B, which will be charged to the Host. BellSouth shall bill this nonrecurring fee on the date that BellSouth provides it written response ("Application Response").

3.3.2 Notwithstanding the foregoing, the Guest may arrange directly with BellSouth for the provision of the interconnecting facilities between BellSouth and the Guest and for the provision of the services and access to unbundled network elements. The bill for these interconnecting facilities, services and access to UNEs will be charged to the Guest

pursuant to the applicable tariff or the Guest's Interconnection Agreement with BellSouth.

3.3.3 BLC Management shall indemnify and hold harmless BellSouth from any and all claims, actions, causes of action, of whatever kind or nature arising out of the presence of BLC Management's Guest(s) in the Remote Collocation Space except to the extent caused by BellSouth's sole negligence, gross negligence, or willful misconduct.

3.4 Adjacent Collocation. Subject to technical feasibility and space availability, BellSouth will permit adjacent Remote Site collocation arrangements ("Remote Site Adjacent Arrangement") on the property on which the Remote Site is located when space within the Remote Site Location is legitimately exhausted, where the Remote Site Adjacent Arrangement does not interfere with access to existing or planned structures or facilities on the Remote Site Location property. The Remote Site Adjacent Arrangement shall be constructed or procured by BLC Management and in conformance with BellSouth's design and construction Specifications. Further, BLC Management shall construct, procure, maintain and operate said Remote Site Adjacent Arrangement(s) pursuant to all of the terms and conditions set forth in this Attachment. Rates shall be negotiated at the time of the application for the Remote Site Adjacent Arrangement.

3.4.1 Should BLC Management elect Adjacent Collocation, BLC Management must arrange with a BellSouth Certified Supplier to construct a Remote Site Adjacent Arrangement structure in accordance with BellSouth's Specifications. Where local building codes require enclosure specifications more stringent than BellSouth's Specifications, BLC Management and BLC Management's BellSouth Certified Supplier must comply with local building code requirements. BLC Management's BellSouth Certified Supplier shall be responsible for filing and receiving any and all necessary zoning, permits and/or licenses for such construction. BLC Management's BellSouth Certified Supplier shall bill BLC Management directly for all work performed for BLC Management pursuant to this Attachment and BellSouth shall have no liability for nor responsibility to pay such charges imposed by BLC Management's BellSouth Certified Supplier. BLC Management must provide the local BellSouth Remote Site Location contact with two cards, keys or other access device used to enter the locked enclosure. Except in cases of emergency, BellSouth shall not access BLC Management's locked enclosure prior to notifying BLC Management at least forty-eight (48) hours or two (2) business days, whichever is greater, before access to the locked enclosure is required.

3.4.2 BLC Management must submit its plans and specifications to BellSouth with its Firm Order. BellSouth shall review BLC Management's plans and specifications prior to construction of a Remote Site Adjacent Arrangement(s) to ensure compliance with BellSouth's Specifications. BellSouth shall complete its review within fifteen (15) calendar days after receipt of plans and specifications. BellSouth may inspect the Remote Site Adjacent Arrangement(s) during and after construction to confirm it is

constructed according to the submitted plans and specifications. BellSouth shall require BLC Management to remove or correct within seven (7) calendar days at BLC Management's expense any structure that does not meet these plans and specifications or, where applicable, BellSouth's Specifications.

3.4.3 BLC Management shall provide a concrete pad, the structure housing the arrangement, heating/ventilation/air conditioning ("HVAC"), lighting, and all facilities that connect the structure (i.e. racking, conduits, etc.) to the BellSouth point of demarcation. At BLC Management's option, and where the local authority having jurisdiction permits, BellSouth shall provide an AC power source and access to physical collocation services and facilities subject to the same nondiscriminatory requirements as applicable to any other physical collocation arrangement. In Alabama and Louisiana, BellSouth will provide DC power to Adjacent Collocation sites where technically feasible, as that term has been defined by the FCC, and subject to individual case basis pricing. BLC Management's BellSouth Certified Supplier shall be responsible, at BLC Management's expense, for filing and receiving any and all necessary zoning, permits and/or licenses for such arrangement. BellSouth shall allow Shared Collocation within a Remote Site Adjacent Arrangement pursuant to the terms and conditions set forth herein.

3.5 Co-carrier cross-connect (CCXC). The primary purpose of collocation is for a collocated telecommunications carrier to interconnect with BellSouth's network or to access BellSouth's unbundled network elements for the provision of telecommunications services within a BellSouth Premises. BellSouth will permit BLC Management to interconnect between its virtual or physical collocation arrangements and those of another collocated telecommunications carrier within the same Remote Site Location. Both BLC Management's agreement and the other collocated telecommunications carrier's agreement must contain rates, terms and conditions for CCXC language. At no point in time shall BLC Management use the Remote Collocation Space for the sole or primary purpose of cross connecting to other collocated telecommunications carriers.

3.5.1 BLC Management must use a BellSouth Certified Supplier to place the CCXC. The CCXC shall be provisioned through facilities owned by BLC Management. Such connections to other collocated telecommunications carriers may be made using either optical or electrical facilities. In cases where BLC Management's equipment and the equipment of the other collocated telecommunications carrier are located in contiguous caged Collocation Spaces, BLC Management will have the option of using BLC Management's own technicians to deploy co-carrier cross connects using either electrical or optical facilities between the sets of equipment and construct its own dedicated cable support structure. BLC Management shall deploy such optical or electrical connections directly between its own facilities and the facilities of other collocated telecommunications carriers without being routed through BellSouth equipment. BLC Management shall not provision CCXC on any BellSouth distribution frame, POT (Point of Termination) Bay, DSX (Digital System Cross-

connect) or LGX (Light Guide Cross-connect). BLC Management is responsible for ensuring the integrity of the signal.

3.5.2 BLC Management shall be responsible for providing a letter of authorization ("LOA") to BellSouth from the other collocated telecommunications carrier prior to installing the CCXC. BLC Management-provisioned CCXC shall utilize common cable support structure. There will be a recurring charge per linear foot, per cable, of common cable support structure used. In the case of two contiguous caged collocation arrangements, BLC Management will have the option of using BLC Management's own technicians to construct its own dedicated support structure.

3.5.3 To order CCXCs, BLC Management must submit an Application. If no modification to the Remote Collocation Space is requested other than the placement of CCXCs, the Subsequent Application Fee for CCXCs, as defined in Exhibit B, will apply. If modifications in addition to the placement of CCXCs are requested, the Application Fee will apply. This nonrecurring fee will be billed by BellSouth on the date that BellSouth provides an Application Response.

4. **Occupancy**

4.1 Occupancy. BellSouth will notify BLC Management in writing that the Remote Collocation Space is ready for occupancy ("Space Ready Date"). BLC Management will schedule and complete an acceptance walkthrough of each Remote Collocation Space with BellSouth within fifteen (15) calendar days of BellSouth's notifying BLC Management that Remote Collocation Space is ready for occupancy ("Space Ready Date"). BellSouth will correct any deviations to BLC Management's original or jointly amended requirements within seven (7) calendar days after the walkthrough, unless the Parties jointly agree upon a different time frame, and BellSouth shall establish a new Space Ready Date. Another acceptance walkthrough will then be scheduled and conducted within fifteen (15) calendar days of the new Space Ready Date. This follow-up acceptance walkthrough will be limited to those items identified in the initial walkthrough. If BLC Management has met the fifteen (15) calendar day interval(s), billing will begin upon the date of BLC Management's acceptance of the Collocation Space ("Space Acceptance Date"). In the event that BLC Management fails to complete an acceptance walkthrough within this fifteen (15) calendar day interval, the Remote Collocation Space shall be deemed accepted by BLC Management on the Space Ready Date and billing will commence from that date. If BLC Management decides to occupy the space prior to the Space Ready Date, the date BLC Management occupies the space becomes the new Space Acceptance Date and billing begins from that date. BLC Management must notify BellSouth in writing that collocation equipment installation is complete and is operational with BellSouth's network. BellSouth may, at its option, not accept orders for cross connects until receipt of such notice. For purposes of this paragraph, BLC Management's telecommunications equipment will be deemed operational when cross-connected to BellSouth's network for the purpose of service provision.

4.2 Termination of Occupancy. In addition to any other provisions addressing termination of occupancy in this Attachment, BLC Management may terminate occupancy in a particular Remote Collocation Space by submitting an Application requesting termination of occupancy; such termination shall be effective upon BellSouth's acceptance of the Space Relinquishment Form. Billing for monthly recurring charges will cease on the date <customer short name> and BellSouth conduct an inspection of the terminated space and jointly sign off on the Space Relinquishment Form or on the date that <customer short name> signs off on the Space Relinquishment Form and sends the form to BellSouth if a subsequent inspection of the terminated space by BellSouth reveals no discrepancies. If the subsequent inspection by BellSouth reveals discrepancies, billing will cease on the date that BellSouth and <customer short name> jointly conduct an inspection which confirms that <customer short name> has corrected the discrepancies. An Application Fee will not apply for termination of occupancy. BellSouth may terminate BLC Management's right to occupy the Remote Collocation Space in the event BLC Management fails to comply with any provision of this Agreement.

4.2.1 Upon termination of occupancy, BLC Management at its expense shall remove its equipment and other property from the Remote Collocation Space. BLC Management shall have thirty (30) calendar days from the Bona Fide Firm Order ("BFFO") Application Date ("Termination Date") to complete such removal, including the removal of all equipment and facilities of BLC Management's Guest(s), unless BLC Management's Guest(s) has assumed responsibility for the Remote Collocation Space housing the Guest(s)'s equipment and executed the documentation required by BellSouth prior to such removal date. BLC Management shall continue payment of monthly fees to BellSouth until such date as BLC Management, and if applicable BLC Management's Guest(s), has fully vacated the Remote Collocation Space and the Space Relinquish Form has been accepted by BellSouth. Should BLC Management or BLC Management's Guest(s) fail to vacate the Remote Collocation Space within thirty (30) calendar days from the Termination Date, BellSouth shall have the right to remove the equipment and dispose of the equipment and other property of BLC Management or BLC Management's Guest(s), in any manner that BellSouth deems fit, at BLC Management's expense and with no liability whatsoever for BLC Management's or BLC Management's Guest(s)'s property. Upon termination of BLC Management's right to occupy Remote Collocation Space, the Remote Collocation Space will revert back to BellSouth, and BLC Management shall surrender such Remote Collocation Space to BellSouth in the same condition as when first occupied by the BLC Management except for ordinary wear and tear unless otherwise agreed to by the Parties. For CEVs and huts BLC Management's BellSouth Certified Supplier shall be responsible for updating and making any necessary changes to BellSouth's records as required by BellSouth's Specifications including but not limited to Record Drawings and ERMA Records. BLC Management shall be responsible for the cost of removing any BLC Management constructed enclosure, together with all support structures (e.g., racking, conduits, or power cables), at the termination of occupancy and restoring the grounds to their original condition.

5. Use of Remote Collocation Space

5.1 Equipment Type. BellSouth permits the collocation of any type of equipment necessary for interconnection to BellSouth's network or for access to BellSouth's unbundled network elements in the provision of telecommunications services, as the term "necessary" is defined by FCC 47 C.F.R. Section 51.323 (b). The primary purpose and function of any equipment collocated in a Remote Collocation Space must be for interconnection to BellSouth's network or for access to BellSouth's unbundled network elements in the provision of telecommunications services.

5.1.1 Examples of equipment that would not be considered necessary include but are not limited to: traditional circuit switching equipment, equipment used exclusively for call-related databases, computer servers used exclusively for providing information services, operations support system (OSS) equipment used to support collocated telecommunications carrier network operations, equipment that generates customer orders, manages trouble tickets or inventory, or stores customer records in centralized databases, etc. BellSouth will determine upon receipt of an application if the requested equipment is necessary based on the criteria established by the FCC. Multifunctional equipment placed on BellSouth's Premises must not place any greater relative burden on BellSouth's property than comparable single-function equipment. BellSouth reserves the right to permit collocation of any equipment on a nondiscriminatory basis.

5.1.2 Such equipment must, at a minimum, meet the following Telcordia Network Equipment Building Systems (NEBS) General Equipment Requirements: Criteria Level 3 requirements as outlined in the Telcordia Special Report SR-3580, Issue 1. Except where otherwise required by a Commission, BellSouth shall comply with the applicable FCC rules relating to denial of collocation based on BLC Management's failure to comply with this Section.

5.1.2.1 All BLC Management equipment installation shall comply with BellSouth TR 73503-11h, "Grounding - Engineering Procedures". Metallic cable sheaths and metallic strength members of optical fiber cables as well as the metallic cable sheaths of all copper conductor cables shall be bonded to the designated grounding bus for the Remote Site Location. All copper conductor pairs, working and non-working, shall be equipped with a solid-state protector unit (over-voltage protection only), which has been listed by a nationally recognized testing laboratory.

5.1.3 BLC Management shall identify to BellSouth whenever BLC Management submits a Method of Procedure ("MOP") adding equipment to BLC Management's Remote Collocation Space all UCC-1 lien holders or other entities that have a financial interest, secured or otherwise, in the equipment in BLC Management's Remote Collocation Space. BLC Management shall submit a copy of the list of any lien holders or other entities that have a financial interest to BLC Management's ATCC Representative.

5.2 BLC Management shall not use the Remote Collocation Space for marketing purposes nor shall it place any identifying signs or markings in the area surrounding the Remote Collocation Space or on the grounds of the Remote Site Location.

5.3 BLC Management shall place a plaque or other identification affixed to BLC Management's equipment to identify BLC Management's equipment, including a list of emergency contacts with telephone numbers.

5.4 Entrance Facilities. BLC Management may elect to place BLC Management-owned or BLC Management-leased fiber entrance facilities into the Remote Collocation Space. BellSouth will designate the point of interconnection at the Remote Site Location housing the Remote Collocation Space, which is physically accessible by both Parties. BLC Management will provide and place copper cable through conduit from the Remote Collocation Space to the Feeder Distribution Interface to the splice location of sufficient length for splicing by BellSouth. BLC Management must contact BellSouth for instructions prior to placing the entrance facility cable. BLC Management is responsible for maintenance of the entrance facilities.

5.4.1 Shared Use. BLC Management may utilize spare capacity on an existing interconnector entrance facility for the purpose of providing an entrance facility to BLC Management's collocation arrangement within the same BellSouth Remote Site Location. BellSouth shall allow splicing to the entrance facility, provided that the fiber is non-working fiber. BLC Management must arrange with BellSouth in accordance with BellSouth's Special Construction Procedures, RL93-11-030BT, and provide a LOA from the other telecommunications carrier for BellSouth to splice the BLC Management provided riser cable to the spare capacity on the entrance facility. If BLC Management desires to allow another telecommunications carrier to use its entrance facilities, then that telecommunications carrier must arrange with BellSouth in accordance with BellSouth's Special Construction Procedures, RL93-11-030BT, and provide a LOA from BLC Management for BellSouth to splice that telecommunications carrier's provided riser cable to the spare capacity on BLC Management's entrance facility.

5.5 Demarcation Point. BellSouth will designate the point(s) of demarcation between BLC Management's equipment and/or network and BellSouth's network. Each Party will be responsible for maintenance and operation of all equipment/facilities on its side of the demarcation point. BLC Management or its agent must perform all required maintenance to BLC Management equipment/facilities on its side of the demarcation point, pursuant to Section 5.6, following.

5.6 BLC Management's Equipment and Facilities. BLC Management, or if required by this Attachment, BLC Management's BellSouth Certified Supplier, is solely responsible for the design, engineering, installation, testing, provisioning, performance, monitoring, maintenance and repair of the equipment and facilities used by BLC Management which must be performed in compliance with all applicable BellSouth

Specifications. Such equipment and facilities may include but are not limited to cable(s), equipment, and point of termination connections. BLC Management and its selected BellSouth Certified Supplier must follow and comply with all BellSouth requirements outlined in BellSouth's TR 73503, TR 73519, TR 73572, and TR 73564.

5.7 BellSouth's Access to Remote Collocation Space. From time to time BellSouth may require access to the Remote Collocation Space. BellSouth retains the right to access the Remote Collocation Space for the purpose of making BellSouth equipment and Remote Site Location modifications. Except in case of emergency, BellSouth will give notice to BLC Management at least forty-eight (48) hours before access to the Remote Collocation Space is required. BLC Management may elect to be present whenever BellSouth performs work in the Collocation Space. The Parties agree that BLC Management will not bear any of the expense associated with this work.

5.8 Access. Pursuant to Section 12, BLC Management shall have access to the Remote Collocation Space twenty-four (24) hours a day, seven (7) days a week. BLC Management agrees to provide the name and social security number or date of birth or driver's license number of each employee, supplier, or agents of BLC Management or BLC Management's Guests to be provided with access keys or cards ("Access Keys") prior to the issuance of said Access Keys using form RF-2906-C "CLEC and CLEC Certified Supplier Access Request and Acknowledgement". Key acknowledgement forms, "Collocation Acknowledgement Sheet" for access cards and "Key Acknowledgement Form" for keys, must be signed by BLC Management and returned to BellSouth Access Management within fifteen (15) calendar days of BLC Management's receipt. Failure to return properly acknowledged forms will result in the holding of subsequent requests until acknowledgements are current. Access Keys shall not be duplicated under any circumstances. BLC Management agrees to be responsible for all Access Keys and for the return of all said Access Keys in the possession of BLC Management's employees, suppliers, Guests, or agents after termination of the employment relationship, contractual obligation with BLC Management or upon the termination of this Attachment or the termination of occupancy of an individual Remote Collocation Space arrangement.

5.8.1 BellSouth will permit one accompanied site visit to BLC Management's designated collocation arrangement location after receipt of the BFFO without charge to BLC Management. BLC Management must submit to BellSouth the completed Access Control Request Form for all employees or agents requiring access to the BellSouth Remote Site Location a minimum of thirty (30) calendar days prior to the date BLC Management desires access to the Remote Collocation Space. In order to permit reasonable access during construction of the Remote Collocation Space, BLC Management may submit such a request at any time subsequent to BellSouth's receipt of the BFFO. In the event BLC Management desires access to the Remote Collocation Space after submitting such a request but prior to access being approved, in addition to the first accompanied free visit, BellSouth shall permit BLC Management to access the Remote Collocation Space accompanied by a security

escort at BLC Management's expense. BLC Management must request escorted access at least three (3) business days prior to the date such access is desired.

5.9 Lost or Stolen Access Keys. BLC Management shall notify BellSouth in writing immediately in the case of lost or stolen Access Keys. Should it become necessary for BellSouth to re-key Remote Site Locations or deactivate a card as a result of a lost Access Key(s) or for failure to return an Access Key(s), BLC Management shall pay for all reasonable costs associated with the re-keying or deactivating the card.

5.10 Interference or Impairment. Notwithstanding any other provisions of this Attachment, BLC Management shall not use any product or service provided under this Agreement, any other service related thereto or used in combination therewith, or place or use any equipment and facilities in any manner that 1) significantly degrades, interferes with or impairs service provided by BellSouth or by any other entity or any person's use of its telecommunications service; 2) endangers or damages the equipment, facilities or other property of BellSouth or of any other entity or person; 3) compromises the privacy of any communications; or 4)creates an unreasonable risk of injury or death to any individual or to the public. If BellSouth reasonably determines that any equipment or facilities of BLC Management violates the provisions of this paragraph, BellSouth shall give written notice to BLC Management, which notice shall direct BLC Management to cure the violation within forty-eight (48) hours of BLC Management's actual receipt of written notice or, at a minimum, to commence curative measures within 24 hours and to exercise reasonable diligence to complete such measures as soon as possible thereafter. After receipt of the notice, the Parties agree to consult immediately and, if necessary, to inspect the arrangement.

5.10.1 Except in the case of the deployment of an advanced service which significantly degrades the performance of other advanced services or traditional voice band services, if BLC Management fails to take curative action within forty-eight (48) hours or if the violation is of a character which poses an immediate and substantial threat of damage to property, injury or death to any person, or any other significant degradation, interference or impairment of BellSouth's or any other entity's service, then and only in that event BellSouth may take such action as it deems appropriate to correct the violation, including without limitation the interruption of electrical power to BLC Management's equipment. BellSouth will endeavor, but is not required, to provide notice to BLC Management prior to taking such action and shall have no liability to BLC Management for any damages arising from such action, except to the extent that such action by BellSouth constitutes willful misconduct.

5.10.2 For purposes of this section, the term significantly degrade shall mean an action that noticeably impairs a service from a user's perspective. In the case of the deployment of an advanced service which significantly degrades the performance of other advanced services or traditional voice band services and BLC Management fails to take curative action within forty-eight (48) hours then BellSouth will establish before the Commission that the technology deployment is causing the significant degradation.

Any claims of network harm presented to BLC Management or, if subsequently necessary, the Commission must be supported with specific and verifiable information. Where BellSouth demonstrates that a deployed technology is significantly degrading the performance of other advanced services or traditional voice band services, BLC Management shall discontinue deployment of that technology and migrate its customers to technologies that will not significantly degrade the performance of other such services. Where the only degraded service itself is a known disturber, and the newly deployed technology satisfies at least one of the criteria for a presumption that is acceptable for deployment under Section 47 C.F.R. 51.230, the degraded service shall not prevail against the newly-deployed technology.

5.11 Personalty and its Removal. Facilities and equipment placed by BLC Management in the Remote Collocation Space shall not become a part of the Remote Site Location, even if nailed, screwed or otherwise fastened to the Remote Collocation Space but shall retain their status as personalty and may be removed by BLC Management at any time. Any damage caused to the Remote Collocation Space by BLC Management's employees, agents or representatives shall be promptly repaired by BLC Management at its expense.

5.11.1 If BLC Management decides to remove equipment from its Remote Collocation Space and the removal requires no physical changes, BellSouth will bill BLC Management an Administrative Only Application Fee as set forth in Exhibit B for these changes. This nonrecurring fee will be billed on the date that BellSouth provides an Application Response.

5.12 Alterations. In no case shall BLC Management or any person acting on behalf of BLC Management make any rearrangement, modification, improvement, addition, or other alteration which could affect in any way space, power, HVAC, and/or safety considerations to the Remote Collocation Space or the BellSouth Remote Site Location without the written consent of BellSouth, which consent shall not be unreasonably withheld. The cost of any specialized alterations shall be paid by BLC Management. Any such material rearrangement, modification, improvement, addition, or other alteration shall require an application and Application Fee. BellSouth will bill the nonrecurring fee on the date that BellSouth provides an Application Response.

5.13 Upkeep of Remote Collocation Space. BLC Management shall be responsible for the general upkeep and cleaning of the Remote Collocation Space. BLC Management shall be responsible for removing any BLC Management debris from the Remote Collocation Space and from in and around the Remote Site Location on each visit.

6. Ordering and Preparation of Remote Collocation Space

6.1 Should any state or federal regulatory agency impose procedures or intervals applicable to BLC Management and BellSouth that are different from procedures or intervals set forth in this Section, whether now in effect or that become effective after execution of this Agreement, those procedures or intervals shall supersede the

requirements set forth herein for that jurisdiction for all applications submitted for the first time after the effective date thereof

6.2 Remote Site Application. When BLC Management or BLC Management's Guest(s) desires to install a bay/rack in a Remote Site Location, BLC Management shall submit to BellSouth a Physical Expanded Interconnection Application Document ("Application"). The application is Bona Fide when it is complete and accurate, meaning that all required fields on the application are completed with the appropriate type of information. An application fee will apply which will be billed on the date that BellSouth provides an Application Response. The placement of an additional bay/rack at a later date will be treated in the same fashion and an application will be required. The installation of additional shelves/equipment, subject to the restrictions contained in Section 5.10, within an existing bay/rack does not require an application.

6.3 Availability of Space. Upon submission of an application, BellSouth will permit BLC Management to physically collocate, pursuant to the terms of this Attachment, at any BellSouth Remote Site Location, unless BellSouth has determined that there is no space available due to space limitations or that collocation at the Remote Site Location is not practical for technical reasons. In the event space is not immediately available at a Remote Site Location, BellSouth reserves the right to make additional space available, in which case the conditions in Section 7 shall apply, or BellSouth may elect to deny space in accordance with this Section in which case virtual or adjacent collocation options may be available. If the amount of space requested is not available, BellSouth will notify BLC Management of the amount that is available.

6.4 Space Availability Notification.

6.4.1 Unless otherwise specified, BellSouth will respond to an application within ten (10) calendar days as to whether space is available or not available within a BellSouth Remote Site Location. BellSouth will also respond as to whether the application is Bona Fide and if it is not Bona Fide the items necessary to cause the application to become Bona Fide. If the amount of space requested is not available, BellSouth will notify BLC Management of the amount of space that is available and no Application Fee shall apply. When BellSouth's response includes an amount of space less than that requested by BLC Management or differently configured no application fee shall apply. If BLC Management decides to accept the available space, BLC Management must resubmit its application to reflect the actual space available prior to submitting a BFFO and an application fee will be billed.

6.4.2 BellSouth will respond to a Florida application within fifteen (15) calendar days as to whether space is available or not available within a BellSouth Remote Site Location. BellSouth will also respond as to whether the application is Bona Fide and if it is not Bona Fide the items necessary to cause the application to become Bona Fide. If a lesser amount of space than requested is available, BellSouth will provide an Application Response for the amount of space that is available and an Application Fee will be billed by BellSouth on the date that BellSouth provides an Application

Response. When BellSouth's Application Response includes an amount of space less than that requested by BLC Management or differently configured, if BLC Management decides to accept the available space, BLC Management must amend its application to reflect the actual space available prior to submitting a BFFO.

6.4.3 BellSouth will respond to a Louisiana application within ten (10) calendar days for space availability for one (1) to ten (10) applications; fifteen (15) calendar days for eleven (11) to twenty (20) applications; and for more than twenty (20) applications, the response interval is increased by five (5) calendar days for every five additional applications received within five (5) business days. If the amount of space requested is not available, BellSouth will notify BLC Management of the amount of space that is available and no Application Fee will apply. When BellSouth's response includes an amount of space less than that requested by BLC Management or differently configured no application fee shall apply. If BLC Management decides to accept the available space, BLC Management must resubmit its application to reflect the actual space available prior to submitting a BFFO and an application fee will be billed. BellSouth will also respond as to whether the application is Bona Fide and if it is not Bona Fide the items necessary to cause the application to become Bona Fide.

6.5 Denial of Application. If BellSouth notifies BLC Management that no space is available ("Denial of Application"), BellSouth will not assess an Application Fee. After notifying BLC Management that BellSouth has no available space in the requested Remote Site Location, BellSouth will allow BLC Management, upon request, to tour the Remote Site Location within ten (10) calendar days of such Denial of Application. In order to schedule said tour within ten (10) calendar days, the request for a tour of the Remote Site Location must be received by BellSouth within five (5) calendar days of the Denial of Application.

6.6 Filing of Petition for Waiver. Upon Denial of Application BellSouth will timely file a petition with the Commission pursuant to 47 U.S.C. § 251(c)(6). BellSouth shall provide to the Commission any information requested by that Commission. Such information shall include which space, if any, BellSouth or any of BellSouth's affiliates have reserved for future use and a detailed description of the specific future uses for which the space has been reserved. Subject to an appropriate nondisclosure agreement or provision, BellSouth shall permit BLC Management to inspect any plans or diagrams that BellSouth provides to the Commission.

6.7 Waiting List. On a first-come, first-served basis governed by the date of receipt of an application or Letter of Intent, BellSouth will maintain a waiting list of requesting carriers who have either received a Denial of Application or, where it is publicly known that the Remote Site Location is out of space, have submitted a Letter of Intent to collocate. BellSouth will notify the telecommunications carriers on the waiting list that can be accommodated by the amount of space that becomes available according to the position of the telecommunications carriers on said waiting list.

6.7.1 In Florida, on a first-come, first-served basis governed by the date of receipt of an application or Letter of Intent, BellSouth will maintain a waiting list of requesting carriers who have either received a Denial of Application or, where it is publicly known that the Remote Site Location is out of space, have submitted a Letter of Intent to collocate. Sixty (60) calendar days prior to space becoming available, if known, BellSouth will notify the Florida PSC and the telecommunications carriers on the waiting list by mail when space becomes available according to the position of the telecommunications carrier on said waiting list. If not known sixty (60) calendar days in advance, BellSouth shall notify the Florida PSC and the telecommunications carriers on the waiting list within two business days of the determination that space is available. A telecommunications carrier that, upon denial of physical collocation, requests virtual collocation shall be automatically placed on the waiting list.

6.7.2 When space becomes available, BLC Management must submit an updated, complete, and correct application to BellSouth within thirty (30) calendar days of such notification. If BLC Management has originally requested caged Remote Collocation Space and cageless Remote Collocation Space becomes available, BLC Management may refuse such space and notify BellSouth in writing within that time that BLC Management wants to maintain its place on the waiting list without accepting such space. BLC Management may accept an amount of space less than its original request by submitting an application as set forth above, and upon request, may maintain its position on the waiting list for the remaining space that was initially requested. If BLC Management does not submit such an application or notify BellSouth in writing as described above, BellSouth will offer such space to the next telecommunications carrier on the waiting list and remove BLC Management from the waiting list. Upon request, BellSouth will advise BLC Management as to its position on the list.

6.8 Public Notification. BellSouth will maintain on its Interconnection Services website a notification document that will indicate all Remote Site Locations that are without available space. BellSouth shall update such document within ten (10) calendar days of the date that BellSouth becomes aware that there is insufficient space to accommodate collocation at the Remote Site Location. BellSouth will also post a document on its Interconnection Services website that contains a general notice where space has become available in a Remote Site Location previously on the space exhaust list.

6.9 Application Response.

6.9.1 In Florida, within fifteen (15) calendar days of receipt of a Bona Fide application, when space has been determined to be available or when a lesser amount of space than that requested is available, then with respect to the space available, BellSouth will provide an Application Response including sufficient information to enable BLC Management to place a Firm Order. The Application Response will include, at a minimum, the configuration of the space, the Cable Installation Fee, Cable Records Fee, and the space preparation fees, as described in Section 8. When BLC Management submits ten (10) or more applications within ten (10) calendar days, the

initial fifteen (15) calendar day response period will increase by ten (10) calendar days for every additional ten (10) applications or fraction thereof.

6.9.2 In Alabama, Georgia, Kentucky, Mississippi, North Carolina, South Carolina, and Tennessee when space has been determined to be available, BellSouth will provide an Application Response within twenty (20) calendar days of receipt of a Bona Fide application. The Application Response will include, at a minimum, the configuration of the space, the Cable Installation Fee, Cable Records Fee, and the space preparation fees, as described in Section 8.

6.9.3 In Louisiana, when space has been determined to be available, BellSouth will respond with an Application Response within thirty (30) calendar days for one (1) to ten (10) applications; thirty (35) calendar days for eleven (11) to twenty (20) applications; and for requests of more than twenty (20) applications, the Application Response interval will be increased by five (5) calendar days for every five (5) applications received within five (5) business days. The Application Response will include, at a minimum, the configuration of the space, the Cable Installation Fee, Cable Records Fee, and the space preparation fees, as described in Section 8.

6.10 Application Modifications.

6.10.1 If a modification or revision is made to any information in the Bona Fide application prior to a BFFO, with the exception of modifications to Customer Information, Contact Information or Billing Contact Information, either at the request of BLC Management or necessitated by technical considerations, said application shall be considered a new application and shall be handled as a new application with respect to response and provisioning intervals and BellSouth will charge BLC Management a full application fee as set forth in Exhibit B. BellSouth will bill the nonrecurring fee on the date that BellSouth provides an Application Response.

6.10.2 Bona Fide Firm Order.

6.10.3 BLC Management shall indicate its intent to proceed with equipment installation in a BellSouth Remote Site Location by submitting a Firm Order to BellSouth. The BFFO must be received by BellSouth no later than thirty (30) calendar days after BellSouth's Application Response to BLC Management's Bona Fide application or the application will expire.

6.10.4 BellSouth will establish a firm order date based upon the date BellSouth is in receipt of a BFFO. BellSouth will acknowledge the receipt of BLC Management's BFFO within seven (7) calendar days of receipt indicating that the BFFO has been received. A BellSouth response to a BFFO will include a Firm Order Confirmation containing the firm order date. No revisions will be made to a BFFO.

7. Construction and Provisioning

7.1 Construction and Provisioning Intervals.

7.1.1 In Florida, BellSouth will complete construction for collocation arrangements as soon as possible and within a maximum of ninety (90) calendar days from receipt of a BFFO or as agreed to by the Parties. For changes to Remote Collocation Space after initial space completion ("Augmentation"), BellSouth will complete construction for collocation arrangements as soon as possible and within a maximum of forty-five (45) calendar days from receipt of a BFFO or as agreed to by the Parties. If BellSouth does not believe that construction will be completed within the relevant time frame and BellSouth and BLC Management cannot agree upon a completion date, within forty-five (45) calendar days of receipt of the BFFO for an initial request, and within thirty (30) calendar days for Augmentations, BellSouth may seek an extension from the Florida Commission.

7.1.2 In Alabama, Georgia, Kentucky, Mississippi, North Carolina, South Carolina, and Tennessee, BellSouth will complete construction for collocation arrangements under ordinary conditions as soon as possible and within a maximum of sixty (60) calendar days from receipt of a BFFO and ninety (90) calendar days from receipt of a BFFO for extraordinary conditions or as agreed to by the Parties. Ordinary conditions are defined as space available with only minor changes to support systems required, such as but not limited to, HVAC, cabling and the power plant(s). Extraordinary conditions shall include, but not limited to, major BellSouth equipment rearrangement or addition; power plant addition or upgrade; major mechanical addition or upgrade; major upgrade for ADA compliance; environmental hazard or hazardous materials abatement; and arrangements for which equipment shipping intervals are extraordinary in length. The Parties may mutually agree to renegotiate an alternative provisioning interval or BellSouth may seek a waiver from this interval from the Commission.

7.1.3 In Louisiana, BellSouth will complete construction for collocation arrangements under ordinary conditions as soon as possible and within a maximum of sixty (60) calendar days from receipt of a BFFO for an initial request, and within 60 calendar days for an Augmentation, or as agreed to by the Parties. The Parties may mutually agree to renegotiate an alternative provisioning interval or BellSouth may seek a waiver from this interval from the Commission.

7.2 In the event BellSouth does not have space immediately available at a Remote Site Location, BellSouth may elect to make additional space available by, for example but not limited to, rearranging BellSouth facilities or constructing additional capacity. In such cases, the above intervals shall not apply and BellSouth will provision the Remote Collocation Space in a nondiscriminatory manner and at parity with BellSouth and will provide BLC Management with the estimated completion date in its Response.

7.3 Joint Planning. Joint planning between BellSouth and BLC Management will commence within a maximum of twenty (20) calendar days from BellSouth's receipt of

a BFFO. BellSouth will provide the preliminary design of the Remote Collocation Space and the equipment configuration requirements as reflected in the Bona Fide application and affirmed in the BFFO. The Remote Collocation Space completion time period will be provided to BLC Management during joint planning.

7.4 Permits. Each Party or its agents will diligently pursue filing for the permits required for the scope of work to be performed by that Party or its agents within ten (10) calendar days of the completion of finalized construction designs and specifications.

7.5 Acceptance Walkthrough. BLC Management will schedule and complete an acceptance walkthrough of each Remote Collocation Space with BellSouth within fifteen (15) calendar days of BellSouth's notifying BLC Management that the Remote Collocation Space is ready for occupancy. In the event that BLC Management fails to complete an acceptance walkthrough within this fifteen (15) calendar day interval, the Remote Collocation Space shall be deemed accepted by BLC Management on the Space Ready Date. BellSouth will correct any deviations to BLC Management's original or jointly amended requirements within seven (7) calendar days after the walkthrough, unless the Parties jointly agree upon a different time frame.

7.6 Use of BellSouth Certified Supplier. BLC Management shall select a supplier which has been approved by BellSouth to perform all engineering and installation work BLC Management and BLC Management's BellSouth Certified Supplier must follow and comply with all BellSouth requirements outlined in BellSouth's TR 73503, TR 73519, TR 73572, and TR 73564. In some cases, BLC Management must select separate BellSouth Certified Suppliers for transmission equipment, switching equipment and power equipment. BellSouth shall provide BLC Management with a list of BellSouth Certified Suppliers upon request. The BellSouth Certified Supplier(s) shall be responsible for installing BLC Management's equipment and components, extending power cabling to the BellSouth power distribution frame, performing operational tests after installation is complete, and notifying BellSouth's Outside Plant engineers and BLC Management upon successful completion of installation. The BellSouth Certified Supplier shall bill BLC Management directly for all work performed for BLC Management pursuant to this Attachment, and BellSouth shall have no liability for nor responsibility to pay such charges imposed by the BellSouth Certified Supplier. BellSouth shall make available its supplier certification program to BLC Management or any supplier proposed by BLC Management and will not unreasonably withhold certification. All work performed by or for BLC Management shall conform to generally accepted industry standards.

7.7 Alarm and Monitoring. BellSouth may place alarms in the Remote Site Location for the protection of BellSouth equipment and facilities. BLC Management shall be responsible for placement, monitoring and removal of environmental and equipment alarms used to service BLC Management's Remote Collocation Space. Upon request, BellSouth will provide BLC Management with applicable tariffed service(s) to facilitate remote monitoring of collocated equipment by BLC Management. Both

Parties shall use best efforts to notify the other of any verified hazardous conditions known to that Party.

7.8 Virtual Remote Collocation Space Relocation. In the event physical Remote Collocation Space was previously denied at a Remote Site Location due to technical reasons or space limitations, and physical Remote Collocation Space has subsequently become available, BLC Management may relocate its virtual Remote Collocation arrangements to physical Remote Collocation Space arrangements and pay the appropriate fees for physical Remote Collocation Space and for the rearrangement or reconfiguration of services terminated in the virtual Remote Collocation Space arrangement, as outlined in the appropriate BellSouth tariffs. In the event that BellSouth knows when additional space for physical Remote Collocation Space may become available at the location requested by BLC Management, such information will be provided to BLC Management in BellSouth's written denial of physical Remote Collocation Space. To the extent that (i) physical Remote Collocation Space becomes available to BLC Management within one hundred eighty (180) calendar days of BellSouth's written denial of BLC Management's request for physical collocation, (ii) BellSouth had knowledge that the space was going to become available, and (iii) BLC Management was not informed in the written denial that physical Remote Collocation Space would become available within such one hundred eighty (180) calendar days, then BLC Management may relocate its virtual Remote Collocation Space arrangement to a physical Remote Collocation Space arrangement and will receive a credit for any nonrecurring charges previously paid for such virtual Remote Collocation Space. BLC Management must arrange with a BellSouth Certified Supplier for the relocation of equipment from its virtual Remote Collocation Space to its physical Remote Collocation Space and will bear the cost of such relocation.

7.8.1 In Alabama, BellSouth will complete a relocation from virtual collocation to physical collocation within ninety (90) calendar days.

7.9 Virtual to Physical Conversion (In-Place). Virtual collocation arrangements may be converted to "in-place" physical arrangements if the potential conversion meets the following four criteria: 1) there is no change in the amount of equipment or the configuration of the equipment that was in the virtual collocation arrangement; 2) the conversion of the virtual collocation arrangement will not cause the equipment or the results of that conversion to be located in a space that BellSouth has reserved for its own future needs; 3) the converted arrangement does not limit BellSouth's ability to secure its own equipment and facilities due to the location of the virtual collocation arrangement; and 4) any changes to the arrangement can be accommodated by existing power, HVAC, and other requirements. Unless otherwise specified, BellSouth will complete virtual to in-place physical collocation conversions within sixty (60) calendar days from receipt of the BFFO. BellSouth will bill BLC Management an Administrative Only Application Fee as set forth in Exhibit B for these charges on the date that BellSouth provides an Application Response.

7.9.1 In Alabama and Tennessee, BellSouth will complete Virtual to Physical Conversions (In Place) within thirty (30) calendar days from receipt of the BFFO.

7.10 Cancellation. If, at any time prior to space acceptance, BLC Management cancels its order for the Remote Collocation Space(s) ("Cancellation"), BellSouth will bill the applicable nonrecurring rate for any and all work processes for which work has begun. In Georgia, if BLC Management cancels its order for Remote Collocation Space at any time prior to space acceptance, BellSouth will bill BLC Management for all costs incurred prior to the date of Cancellation and for any costs incurred as a direct result of the Cancellation, not to exceed the total amount that would have been due had the order not been cancelled.

7.11 Licenses. BLC Management, at its own expense, will be solely responsible for obtaining from governmental authorities, and any other appropriate agency, entity, or person, all rights, privileges, and licenses necessary or required to operate as a provider of telecommunications services to the public or to build-out, equip and occupy the Remote Collocation Space.

7.12 Environmental Hazard Guidelines. The Parties agree to utilize and adhere to the Environmental Hazard Guidelines identified in Exhibit A attached hereto.

8. Rates and Charges

8.1 Recurring Charges. If BLC Management has met the applicable fifteen (15) calendar day walkthrough interval(s) specified in Section 4, billing for recurring charges will begin upon the Space Acceptance Date. In the event that BLC Management fails to complete an acceptance walkthrough within the applicable fifteen (15) calendar day interval(s), billing for recurring charges will commence on the Space Ready Date. If BLC Management occupies the space prior to the Space Ready Date, the date BLC Management occupies the space becomes the new Space Acceptance Date and billing for recurring charges begin on that date.

8.2 Application Fee. BellSouth shall assess an Application Fee via a service order, which shall be issued at the time BellSouth responds that space is available pursuant to Section 6.10 (Application Response). This nonrecurring fee will be billed by BellSouth on the date that BellSouth provides an Application Response.

8.2.1 In Tennessee, the applicable application fee is the planning fee for both Initial Applications and Subsequent Applications placed by BLC Management. This nonrecurring fee will be billed by BellSouth on the date that BellSouth provides an Application Response.

8.3 Rack/Bay Space. The rack/bay space charge includes reasonable charges for air conditioning, ventilation and other allocated expenses associated with maintenance of the Remote Site Location, and includes amperage necessary to power BLC Management's equipment. BLC Management shall pay rack/bay space charges based

upon the number of racks/bays requested. BellSouth will assign Remote Collocation Space in conventional remote site rack/bay lineups where feasible.

8.4 Power. BellSouth shall make available –48 Volt (-48V) DC power for BLC Management's Remote Collocation Space at a BellSouth Power Board or BellSouth Battery Distribution Fuse Bay (BDFB) at BLC Management's option within the Remote Site Location. The charge for power shall be assessed as part of the recurring charge for rack/bay space. If the power requirements for BLC Management's equipment exceeds the capacity available, then such power requirements shall be assessed on an individual case basis. BellSouth will revise recurring power charges to reflect a power upgrade upon notification of the completion of the upgrade by BLC Management's BellSouth Certified Vendor. BellSouth will revise recurring power charges to reflect a power reduction upon BellSouth's receipt of the Power Reduction Form from BLC Management certifying the completion of the power reduction, including the removal of the power cabling by BLC Management's BellSouth Certified Supplier.

8.4.1 Adjacent Collocation Power. Charges for AC power will be assessed per breaker ampere per month. Rates include the provision of commercial and standby AC power, where available. When obtaining power from a BellSouth service panel, protection devices and power cables must be engineered (sized), and installed by BLC Management's BellSouth Certified Supplier except that BellSouth shall engineer and install protection devices and power cables for Adjacent Collocation. BLC Management's BellSouth Certified Supplier must also provide a copy of the engineering power specification prior to the equipment becoming operational. Charges for AC power shall be assessed pursuant to the rates specified in Exhibit B. AC power voltage and phase ratings shall be determined on a per location basis. At BLC Management's option, BLC Management may arrange for AC power in an Adjacent Collocation arrangement from a retail provider of electrical power.

8.5 Security Escort. A security escort will be required whenever BLC Management or its approved agent desires access to the Remote Site Location after the one accompanied site visit allowed pursuant to Section 5 prior to completing BellSouth's Security Training requirements. Rates for a security escort are assessed according to the schedule appended hereto as Exhibit B beginning with the scheduled escort time. BellSouth will wait for one-half (1/2) hour after the scheduled time for such an escort and BLC Management shall pay for such half-hour charges in the event BLC Management fails to show up.

8.6 Other. If no rate is identified in the contract, the rate for the specific service or function will be negotiated by the Parties upon request by either Party.

9. Insurance

9.1 BLC Management shall, at its sole cost and expense, procure, maintain, and keep in force insurance as specified in this Section and underwritten by insurance companies

licensed to do business in the states applicable under this Agreement and having a Best's Insurance Rating of A-.

9.2 BLC Management shall maintain the following specific coverage:

9.2.1 Commercial General Liability coverage in the amount of ten million dollars ($10,000,000.00) or a combination of Commercial General Liability and Excess/Umbrella coverage totaling not less than ten million dollars ($10,000,000.00). BellSouth shall be named as an Additional Insured on the Commercial General Liability policy as specified herein.

9.2.2 Statutory Workers Compensation coverage and Employers Liability coverage in the amount of one hundred thousand dollars ($100,000.00) each accident, one hundred thousand dollars ($100,000.00) each employee by disease, and five hundred thousand dollars ($500,000.00) policy limit by disease.

9.2.3 All Risk Property coverage on a full replacement cost basis insuring all of BLC Management's real and personal property situated on or within BellSouth's Remote Site Location.

9.2.4 BLC Management may elect to purchase business interruption and contingent business interruption insurance, having been advised that BellSouth assumes no liability for loss of profit or revenues should an interruption of service occur.

9.3 The limits set forth in Section 9.2 above may be increased by BellSouth from time to time during the term of this Agreement upon thirty (30) calendar days notice to BLC Management to at least such minimum limits as shall then be customary with respect to comparable occupancy of BellSouth structures.

9.4 All policies purchased by BLC Management shall be deemed to be primary and not contributing to or in excess of any similar coverage purchased by BellSouth. All insurance must be in effect on or before the date equipment is delivered to BellSouth's Remote Site Location and shall remain in effect for the term of this Attachment or until all of BLC Management's property has been removed from BellSouth's Remote Site Location, whichever period is longer. If BLC Management fails to maintain required coverage, BellSouth may pay the premiums thereon and seek reimbursement of same from BLC Management.

9.5 BLC Management shall submit certificates of insurance reflecting the coverage required pursuant to this Section a minimum of ten (10) business days prior to the commencement of any work in the Remote Collocation Space. Failure to meet this interval may result in construction and equipment installation delays. BLC Management shall arrange for BellSouth to receive thirty (30) business days' advance notice of cancellation from BLC Management's insurance company. BLC

Management shall forward a certificate of insurance and notice of cancellation/non-renewal to BellSouth at the following address:

BellSouth Telecommunications, Inc.
Attn.: Risk Management Coordinator
17H53 BellSouth Center
675 W. Peachtree Street
Atlanta, Georgia 30375

9.6 BLC Management must conform to recommendations made by BellSouth's fire insurance company to the extent BellSouth has agreed to, or shall hereafter agree to, such recommendations.

9.7 Self-Insurance. If BLC Management's net worth exceeds five hundred million dollars ($500,000,000), BLC Management may elect to request self-insurance status in lieu of obtaining any of the insurance required in Sections 9.2.1 and 9.2.2. BLC Management shall provide audited financial statements to BellSouth thirty (30) calendar days prior to the commencement of any work in the Remote Collocation Space. BellSouth shall then review such audited financial statements and respond in writing to BLC Management in the event that self-insurance status is not granted to BLC Management. If BellSouth approves BLC Management for self-insurance, BLC Management shall annually furnish to BellSouth, and keep current, evidence of such net worth that is attested to by one of BLC Management's corporate officers. The ability to self-insure shall continue so long as BLC Management meets all of the requirements of this Section. If BLC Management subsequently no longer satisfies this Section, BLC Management is required to purchase insurance as indicated by Sections 9.2.1 and Section 9.2.2.

9.8 The net worth requirements set forth in Section 9.7 may be increased by BellSouth from time to time during the term of this Attachment upon thirty (30) calendar days' notice to BLC Management to at least such minimum limits as shall then be customary with respect to comparable occupancy of BellSouth structures.

9.9 Failure to comply with the provisions of this Section will be deemed a material breach of this Attachment.

10. Mechanics Liens

10.1 If any mechanics lien or other liens shall be filed against property of either Party (BellSouth or BLC Management), or any improvement thereon by reason of or arising out of any labor or materials furnished or alleged to have been furnished or to be furnished to or for the other Party or by reason of any changes, or additions to said property made at the request or under the direction of the other Party, the other Party directing or requesting those changes shall, within thirty (30) business days after receipt of written notice from the Party against whose property said lien has been filed, either pay such lien or cause the same to be bonded off the affected property in the

manner provided by law. The Party causing said lien to be placed against the property of the other shall also defend, at its sole cost and expense, on behalf of the other, any action, suit or proceeding which may be brought for the enforcement of such liens and shall pay any damage and discharge any judgment entered thereon.

11. Inspections

11.1 BellSouth may conduct an inspection of BLC Management's equipment and facilities in the Remote Collocation Space(s) prior to the activation of facilities between BLC Management's equipment and equipment of BellSouth. BellSouth may conduct an inspection if BLC Management adds equipment and may otherwise conduct routine inspections at reasonable intervals mutually agreed upon by the Parties. BellSouth shall provide BLC Management with a minimum of forty-eight (48) hours or two (2) business days, whichever is greater, advance notice of all such inspections. All costs of such inspection shall be borne by BellSouth.

12. Security and Safety Requirements

12.1 Unless otherwise specified, BLC Management will be required, at its own expense, to conduct a statewide investigation of criminal history records for each BLC Management employee hired in the past five years being considered for work on the BellSouth Remote Site Location, for the states/counties where the BLC Management employee has worked and lived for the past five years. Where state law does not permit statewide collection or reporting, an investigation of the applicable counties is acceptable. BLC Management shall not be required to perform this investigation if an affiliated company of BLC Management has performed an investigation of the BLC Management employee seeking access, if such investigation meets the criteria set forth above. This requirement will not apply if BLC Management has performed a pre-employment statewide investigation of criminal history records of the BLC Management employee for the states/counties where the BLC Management employee has worked and lived for the past five years or, where state law does not permit a statewide investigation, an investigation of the applicable counties.

12.2 BLC Management will be required to administer to their personnel assigned to the BellSouth Premises security training either provided by BellSouth, or meeting criteria defined by BellSouth.

12.3 BLC Management shall provide its employees and agents with picture identification, which must be worn, and visible at all times while in the Remote Collocation Space or other areas in or around the Remote Site Location. The photo Identification card shall bear, at a minimum, the employee's name and photo, and BLC Management's name. BellSouth reserves the right to remove from its Remote Site Location any employee of BLC Management not possessing identification issued by BLC Management or who have violated any of BellSouth's policies as outlined in the CLEC Security Training documents. BLC Management shall hold BellSouth harmless for any damages resulting from such removal of its personnel from BellSouth Remote Site Location.

BLC Management shall be solely responsible for ensuring that any Guest(s) of BLC Management is in compliance with all subsections of this Section.

12.4 BLC Management shall not assign to the BellSouth Remote Site Location any personnel with records of felony criminal convictions. BLC Management shall not assign to the BellSouth Remote Site Location any personnel with records of misdemeanor convictions, except for misdemeanor traffic violations, without advising BellSouth of the nature and gravity of the offense(s). BellSouth reserves the right to refuse access to any BLC Management personnel who have been identified to have misdemeanor criminal convictions. Notwithstanding the foregoing, in the event that BLC Management chooses not to advise BellSouth of the nature and gravity of any misdemeanor conviction, BLC Management may, in the alternative, certify to BellSouth that it shall not assign to the BellSouth Remote Site Location any personnel with records of misdemeanor convictions (other than misdemeanor traffic violations).

12.4.1 BLC Management shall not knowingly assign to the BellSouth Remote Site Location any individual who was a former employee of BellSouth and whose employment with BellSouth was terminated for a criminal offense whether or not BellSouth sought prosecution of the individual for the criminal offense.

12.4.2 BLC Management shall not knowingly assign to the BellSouth Remote Site Location any individual who was a former supplier of BellSouth and whose access to a BellSouth Remote Site Location was revoked due to commission of a criminal offense whether or not BellSouth sought prosecution of the individual for the criminal offense.

12.5 For each BLC Management employee or agent hired by BLC Management within five years of being considered for work on the BellSouth Remote Site Location, who requires access to a BellSouth Remote Site Location pursuant to this Attachment, BLC Management shall furnish BellSouth, prior to an employee gaining such access, a certification that the aforementioned background check and security training were completed. The certification will contain a statement that no felony convictions were found and certifying that the security training was completed by the employee. If the employee's criminal history includes misdemeanor convictions, BLC Management will disclose the nature of the convictions to BellSouth at that time. In the alternative, BLC Management may certify to BellSouth that it shall not assign to the BellSouth Remote Site Location any personnel with records of misdemeanor convictions other than misdemeanor traffic violations.

12.5.1 For all other BLC Management employees requiring access to a BellSouth Remote Site Location pursuant to this Attachment, BLC Management shall furnish BellSouth, prior to an employee gaining such access, a certification that the employee is not subject to the requirements of Section 12.5 above and that security training was completed by the employee.

12.6 At BellSouth's request, BLC Management shall promptly remove from BellSouth's Remote Site Location any employee of BLC Management BellSouth does not wish to grant access to its Remote Site Location 1) pursuant to any investigation conducted by BellSouth or 2) prior to the initiation of an investigation if an employee of BLC Management is found interfering with the property or personnel of BellSouth or another collocated telecommunications carrier, provided that an investigation shall promptly be commenced by BellSouth.

12.7 Security Violations. BellSouth reserves the right to interview BLC Management's employees, agents, or suppliers in the event of wrongdoing in or around BellSouth's property or involving BellSouth's or another collocated telecommunications carrier's property or personnel, provided that BellSouth shall provide reasonable notice to BLC Management's Security representative of such interview. BLC Management and its suppliers shall reasonably cooperate with BellSouth's investigation into allegations of wrongdoing or criminal conduct committed by, witnessed by, or involving BLC Management's employees, agents, or suppliers. Additionally, BellSouth reserves the right to bill BLC Management for all reasonable costs associated with investigations involving its employees, agents, or suppliers if it is established and mutually agreed in good faith that BLC Management's employees, agents, or suppliers are responsible for the alleged act. BellSouth shall bill BLC Management for BellSouth property, which is stolen or damaged where an investigation determines the culpability of BLC Management's employees, agents, or suppliers and where BLC Management agrees, in good faith, with the results of such investigation. BLC Management shall notify BellSouth in writing immediately in the event that the BLC Management discovers one of its employees already working on the BellSouth Remote Site Location is a possible security risk. Upon request of the other Party, the Party who is the employer shall discipline consistent with its employment practices, up to and including removal from BellSouth's Remote Site Location, any employee found to have violated the security and safety requirements of this section. BLC Management shall hold BellSouth harmless for any damages resulting from such removal of its personnel from BellSouth's Remote Site Location.

12.8 Use of Supplies. Unauthorized use of telecommunications equipment or supplies by either Party, whether or not used routinely to provide telephone service (e.g. plug-in cards,) will be strictly prohibited and handled appropriately. Costs associated with such unauthorized use may be charged to the offending Party, as may be all associated investigative costs.

12.9 Use of Official Lines. Except for non-toll calls necessary in the performance of their work, neither Party shall use the telephones of the other Party on the BellSouth Remote Site Location. Charges for unauthorized telephone calls may be charged to the offending Party, as may be all associated investigative costs.

12.10 Accountability. Full compliance with the Security requirements of this Section shall in no way limit the accountability of either Party to the other for the improper actions of its employees.

13. Destruction of Remote Collocation Space

13.1 In the event a Remote Collocation Space is wholly or partially damaged by fire, windstorm, tornado, flood or by similar causes to such an extent as to be rendered wholly unsuitable for BLC Management's permitted use hereunder, then either Party may elect within ten (10) calendar days after such damage, to terminate this Attachment with respect to the affected Remote Collocation Space, and if either Party shall so elect, by giving the other written notice of termination, both Parties shall stand released of and from further liability under the terms hereof with respect to such Remote Collocation Space. If the Remote Collocation Space shall suffer only minor damage and shall not be rendered wholly unsuitable for BLC Management's permitted use, or is damaged and the option to terminate is not exercised by either Party, BellSouth covenants and agrees to proceed promptly without expense to BLC Management, except for improvements not to the property of BellSouth, to repair the damage. BellSouth shall have a reasonable time within which to rebuild or make any repairs, and such rebuilding and repairing shall be subject to delays caused by storms, shortages of labor and materials, government regulations, strikes, walkouts, and causes beyond the control of BellSouth, which causes shall not be construed as limiting factors, but as exemplary only. BLC Management may, at its own expense, accelerate the rebuild of its Remote Collocation Space and equipment provided however that a BellSouth Certified Supplier is used and the necessary space preparation has been completed. Rebuild of equipment must be performed by a BellSouth Certified Vendor. If BLC Management' s acceleration of the project increases the cost of the project, then those additional charges will be incurred by BLC Management. Where allowed and where practical, BLC Management may erect a temporary facility while BellSouth rebuilds or makes repairs. In all cases where the Remote Collocation Space shall be rebuilt or repaired, BLC Management shall be entitled to an equitable abatement of rent and other charges, depending upon the unsuitability of the Remote Collocation Space for BLC Management's permitted use, until such Remote Collocation Space is fully repaired and restored and BLC Management's equipment installed therein (but in no event later than thirty (30) calendar days after the Remote Collocation Space is fully repaired and restored). Where BLC Management has placed a Remote Site Adjacent Arrangement pursuant to Section 3.4, BLC Management shall have the sole responsibility to repair or replace said Remote Site Adjacent Arrangement provided herein. Pursuant to this Section, BellSouth will restore the associated services to the Remote Site Adjacent Arrangement.

14. Eminent Domain

14.1 If the whole of a Remote Collocation Space or Remote Site Adjacent Arrangement shall be taken by any public authority under the power of eminent domain, then this

Attachment shall terminate with respect to such Remote Collocation Space or Remote Site Adjacent Arrangement as of the day possession shall be taken by such public authority and rent and other charges for the Remote Collocation Space or Remote Site Adjacent Arrangement shall be paid up to that day with proportionate refund by BellSouth of such rent and charges as may have been paid in advance for a period subsequent to the date of the taking. If any part of the Remote Collocation Space or Remote Site Adjacent Arrangement shall be taken under eminent domain, BellSouth and BLC Management shall each have the right to terminate this Attachment with respect to such Remote Collocation Space or Remote Site Adjacent Arrangement and declare the same null and void, by written notice of such intention to the other Party within ten (10) calendar days after such taking.

15. <u>Nonexclusivity</u>

15.1 BLC Management understands that this Attachment is not exclusive and that BellSouth may enter into similar agreements with other Parties. Assignment of space pursuant to all such agreements shall be determined by space availability and made on a first come, first served basis.

ENVIRONMENTAL AND SAFETY PRINCIPLES

The following principles provide basic guidance on environmental and safety issues when applying for and establishing Physical Collocation arrangements.

1. GENERAL PRINCIPLES

1.1 Compliance with Applicable Law. BellSouth and BLC Management agree to comply with applicable federal, state, and local environmental and safety laws and regulations including U.S. Environmental Protection Agency (USEPA) regulations issued under the Clean Air Act (CAA), Clean Water Act (CWA), Resource Conservation and Recovery Act (RCRA), Comprehensive Environmental Response, Compensation and Liability Act (CERCLA), Superfund Amendments and Reauthorization Act (SARA), the Toxic Substances Control Act (TSCA), and OSHA regulations issued under the Occupational Safety and Health Act of 1970, as amended and NFPA and National Electrical Codes (NEC) and the NESC ("Applicable Laws"). Each Party shall notify the other if compliance inspections are conducted by regulatory agencies and/or citations are issued that relate to any aspect of this Attachment.

1.2 Notice. BellSouth and BLC Management shall provide notice to the other, including Material Safety Data Sheets (MSDSs), of known and recognized physical hazards or Hazardous Chemicals existing on site or brought on site. A Hazardous Chemical inventory list is posted on an OSHA Poster and updated annually at each Central Office. This Poster is normally located near the front entrance of the building or in the lounge area. Each Party is required to provide specific notice for known potential Imminent Danger conditions. BLC Management should contact 1-800-743-6737 for any BellSouth MSDS required.

1.3 Practices/Procedures. BellSouth may make available additional environmental control procedures for BLC Management to follow when working at a BellSouth Remote Site Location (See Section 2, below). These practices/procedures will represent the regular work practices required to be followed by the employees and suppliers of BellSouth for environmental protection. BLC Management will require its suppliers, agents and others accessing the BellSouth Remote Site Location to comply with these practices. Section 2 lists the Environmental categories where BST practices should be followed by BLC Management when operating in the BellSouth Remote Site Location.

1.4 Environmental and Safety Inspections. BellSouth reserves the right to inspect the BLC Management space with proper notification. BellSouth reserves the right to stop any BLC Management work operation that imposes Imminent Danger to the environment, employees or other persons in the area or Remote Site Location.

1.5 Hazardous Materials Brought On Site. Any hazardous materials brought into, used, stored or abandoned at the BellSouth Remote Site Location by BLC Management are owned by BLC Management. BLC Management will indemnify BellSouth for claims, lawsuits or damages to persons or property caused by these materials. Without prior written BellSouth approval, no substantial new safety or environmental hazards can be created by BLC Management or different hazardous materials used by BLC Management at the BellSouth Remote Site Location. BLC Management must

demonstrate adequate emergency response capabilities for its materials used or remaining at the BellSouth Remote Site Location.

1.6 Spills and Releases. When contamination is discovered at a BellSouth Remote Site Location, either Party discovering the condition must notify the other Party. All Spills or Releases of regulated materials will immediately be reported by BLC Management to BellSouth.

1.7 Coordinated Environmental Plans and Permits. BellSouth and BLC Management will coordinate plans, permits or information required to be submitted to government agencies, such as emergency response plans, spill prevention control and countermeasures (SPCC) plans and community reporting. If fees are associated with filing, BellSouth and BLC Management will develop a cost sharing procedure. If BellSouth's permit or EPA identification number must be used, BLC Management must comply with all of BellSouth's permit conditions and environmental processes, including environmental "best management practices (BMP)" (see Section 2, below) and/or selection of BST disposition vendors and disposal sites.

1.8 Environmental and Safety Indemnification. BellSouth and BLC Management shall indemnify, defend and hold harmless the other Party from and against any claims (including, without limitation, third-party claims for personal injury or death or real or personal property damage), judgments, damages, (including direct and indirect damages, and punitive damages), penalties, fines, forfeitures, costs, liabilities, interest and losses arising in connection with the violation or alleged violation of any Applicable Law or contractual obligation or the presence or alleged presence of contamination arising out of the acts or omissions of the indemnifying Party, its agents, suppliers, or employees concerning its operations at the Remote Site Location.

2. CATEGORIES FOR CONSIDERATION OF ENVIRONMENTAL ISSUES

2.1 When performing functions that fall under the following Environmental categories on BellSouth's Remote Site Location, BLC Management agrees to comply with the applicable sections of the current issue of BellSouth's Environmental and Safety Methods and Procedures (M&Ps), incorporated herein by this reference. BLC Management further agrees to cooperate with BellSouth to ensure that BLC Management's employees, agents, and/or suppliers are knowledgeable of and satisfy those provisions of BellSouth's Environmental M&Ps which apply to the specific Environmental function being performed by BLC Management, its employees, agents and/or suppliers.

2.1.1 The most current version of reference documentation must be requested from BLC Management's BellSouth Account Team Collocation Coordinator (ATCC) Representative.

ENVIRONMENTAL CATEGORIES	ENVIRONMENTAL ISSUES	ADDRESSED BY THE FOLLOWING DOCUMENTATION
Disposal of hazardous material or other regulated material (e.g., batteries, fluorescent tubes, solvents & cleaning	Compliance with all applicable local, state, & federal laws and regulations	• Std T&C 450 • Fact Sheet Series 17000

materials)	Pollution liability insurance EVET approval of supplier	• Std T&C 660-3 • Approved Environmental Vendor List (Contact ATCC Representative)
Emergency response	Hazmat/waste release/spill fire safety emergency	• Fact Sheet Series 1700 • Building Emergency Operations Plan (EOP) (specific to and located on Remote Site Location)
Contract labor/outsourcing for services with environmental implications to be performed on BellSouth Remote Site Location (e.g., disposition of hazardous material/waste; maintenance of storage tanks)	Compliance with all applicable local, state, & federal laws and regulations Performance of services in accordance with BST's environmental M&Ps Insurance	• Std T&C 450 • Std T&C 450-B • (Contact ATCC Representative for copy of appropriate E/S M&Ps.) • Std T&C 660
Transportation of hazardous material	Compliance with all applicable local, state, & federal laws and regulations Pollution liability insurance EVET approval of supplier	• Std T&C 450 • Fact Sheet Series 17000 • Std T&C 660-3 • Approved Environmental Vendor List (Contact ATCC Representative)
Maintenance/operations work which may produce a waste Other maintenance work	Compliance with all applicable local, state, & federal laws and regulations Protection of BST employees and equipment	• Std T&C 450 • 29CFR 1910.147 (OSHA Standard) • 29CFR 1910 Subpart O (OSHA Standard)
Janitorial services	All waste removal and disposal must conform to all applicable federal, state and local regulations All Hazardous Material and Waste Asbestos notification and protection of employees and	• –Procurement Manager (CRES Related Matters)-BST Supply Chain Services • Fact Sheet Series 17000

	equipment	• GU-BTEN-001BT, Chapter 3 • BSP 010-170-001BS (Hazcom)
Manhole cleaning	Compliance with all applicable local, state, & federal laws and regulations Pollution liability insurance EVET approval of supplier	• Std T&C 450 • Fact Sheet 14050 • BSP 620-145-011PR Issue A, August 1996 • Std T&C 660-3 • Approved Environmental Vendor List (Contact ATCC Representative)
Removing or disturbing building materials that may contain asbestos	Asbestos work practices	• GU-BTEN-001BT, Chapter 3 For questions regarding removing or disturbing materials that contain asbestos, call the BellSouth Building Service Center: AL, MS, TN, KY & LA (local area code) 557-6194 FL, GA, NC & SC (local area code) 780-2740

3. DEFINITIONS

Generator. Under RCRA, the person whose act produces a Hazardous Waste, as defined in 40 CFR 261, or whose act first causes a Hazardous Waste to become subject to regulation. The Generator is legally responsible for the proper management and disposal of Hazardous Wastes in accordance with regulations.

Hazardous Chemical. As defined in the U.S. Occupational Safety and Health (OSHA) hazard communication standard (29 CFR 1910.1200), any chemical which is a health hazard or physical hazard.

Hazardous Waste. As defined in section 1004 of RCRA.

Imminent Danger. Any conditions or practices at a remote site location which are such that a danger exists which could reasonably be expected to cause immediate death or serious harm to people or immediate significant damage to the environment or natural resources.

Spill or Release. As defined in Section 101 of CERCLA.

4. ACRONYMS

ATCC – Account Team Collocation Coordinator

BST – BellSouth Telecommunications

CRES – Corporate Real Estate and Services (formerly PS&M)

DEC/LDEC - Department Environmental Coordinator/Local Department Environmental Coordinator

E/S – Environmental/Safety

EVET - Environmental Vendor Evaluation Team

GU-BTEN-001BT - BellSouth Environmental Methods and Procedures

NESC - National Electrical Safety Codes

P&SM - Property & Services Management

Std T&C - Standard Terms & Conditions

COLLOCATION - Alabama

CATEGORY		RATE ELEMENTS	Interim	Zone	BCS	USOC	RATES ($)					Svc Order Submitted Elec per LSR	Svc Order Submitted Manually per LSR	Attachment: 4		Exhibit: B	
														Incremental Charge - Manual Svc Order vs. Electronic-1st	Incremental Charge - Manual Svc Order vs. Electronic-Add'l	Incremental Charge - Manual Svc Order vs. Electronic-Disc 1st	Incremental Charge - Manual Svc Order vs. Electronic-Disc Add'l
							Rec	Nonrecurring		Nonrecurring Disconnect		OSS Rates ($)					
								First	Add'l	First	Add'l	SOMEC	SOMAN	SOMAN	SOMAN	SOMAN	SOMAN
PHYSICAL COLLOCATION																	
		Physical Collocation 2-Wire Cross Connect, Exchange Port 2-Wire Analog - Res			UEPSR	PE1R2	0.03	12.30	11.80	6.03	5.44						
		Physical Collocation 2-Wire Cross Connect, Exchange Port 2-Wire Line Side PBX Trunk - Bus			UEPSP	PE1R2	0.03	12.30	11.80	6.03	5.44						
		Physical Collocation 2-Wire Cross Connect, Exchange Port 2-Wire Voice Grade PBX Trunk - Res			UEPSE	PE1R2	0.03	12.30	11.80	6.03	5.44						
		Physical Collocation 2-Wire Cross Connect, Exchange Port 2-Wire Analog - Bus			UEPSB	PE1R2	0.03	12.30	11.80	6.03	5.44						
		Physical Collocation 2-Wire Cross Connect, Exchange Port 2-Wire ISDN			UEPSX	PE1R2	0.03	12.30	11.80	6.03	5.44						
		Physical Collocation 2-Wire Cross Connect, Exchange Port 2-Wire ISDN			UEPTX	PE1R2	0.03	12.30	11.80	6.03	5.44						
		Physical Collocation 4-Wire Cross Connect, Exchange Port 4-Wire ISDN DS1			UEPEX	PE1R4	0.05	12.39	11.87	6.39	5.73						
PHYSICAL COLLOCATION																	
		Physical Collocation - Initial Application Fee			CLO	PE1BA		1,879.48		0.51							
		Physical Collocation - Subsequent Application Fee			CLO	PE1CA		1,566.60									
		Physical Collocation Administrative Only - Application Fee			CLO	PE1BL		742.15									
		Physical Collocation - Space Preparation - Firm Order Processing			CLO	PE1SJ		600.71									
		Physical Collocation - Space Preparation - C.O. Modification per square ft.			CLO	PE1SK	1.96										
		Physical Collocation - Space Preparation, Common Systems Modifications-Cageless, per square foot			CLO	PE1SL	2.62										
		Physical Collocation - Space Preparation - Common Systems Modifications-Caged, per cage			CLO	PE1SM	88.86										
		Physical Collocation - Cable Installation, Pricing, non-recurring charge, per Entrance Cable			CLO	PE1BD		859.71		22.49							
		Physical Collocation - Floor Space, per sq feet			CLO	PE1PJ	3.22										
		Physical Collocation - Cable Support Structure, per Entrance Cable			CLO	PE1PM	17.11										
		Physical Collocation - Power, -48V DC Power - per Fused Amp			CLO	PE1PL	7.83										
		Physical Collocation - Power Reconfiguration Only, Application Fee	I		CLO	PE1PR		398.76									
		Physical Collocation - Power, 120V AC Power, Single Phase, per Breaker Amp			CLO	PE1FB	4.91										
		Physical Collocation - Power, 240V AC Power, Single Phase, per Breaker Amp			CLO	PE1FD	9.84										
		Physical Collocation - Power, 120V AC Power, Three Phase, per Breaker Amp			CLO	PE1FE	14.74										
		Physical Collocation - Power, 277V AC Power, Three Phase, per Breaker Amp			CLO	PE1FG	34.06										
		Physical Collocation - 2-wire cross-connect, loop, provisioning			UEANL,UEQ, UNLDX, UNCNX, UEA, UCL, UAL, UHL, UDC, UDN, UNCVX	PE1P2	0.03	12.30	11.80	6.03	5.44						
		Physical Collocation - 4-wire cross-connect, loop, provisioning			UEA, UHL, UNCVX, UNCDX, UCL, UDL	PE1P4	0.05	12.39	11.87	6.39	5.73						
		Physical Collocation -DS1 Cross-Connect for Physical Collocation, provisioning			WDS1L,WDS1S, UXTD1, ULDD1, USLEL, UNLD1, UEPEX, UEPDX, USL, ULC, U1TD1, UNC1X	PE1P1	1.11	22.03	15.93	6.40	5.79						

COLLOCATION - Alabama														Attachment: 4		Exhibit: B	
CATEGORY		RATE ELEMENTS	Interim	Zone	BCS	USOC	RATES ($)					Svc Order Submitted Elec per LSR	Svc Order Submitted Manually per LSR	Incremental Charge - Manual Svc Order vs. Electronic-1st	Incremental Charge - Manual Svc Order vs. Electronic-Add'l	Incremental Charge - Manual Svc Order vs. Electronic-Disc 1st	Incremental Charge - Manual Svc Order vs. Electronic-Disc Add'l
							Rec	Nonrecurring		Nonrecurring Disconnect		OSS Rates ($)					
								First	Add'l	First	Add'l	SOMEC	SOMAN	SOMAN	SOMAN	SOMAN	SOMAN
		Physical Collocation - DS3 Cross-Connect, provisioning			UE3,U1TD3, UXTD3, UXTS1, UNC3X, UNCSX, ULDD3, U1TS1,ULDS1, UNLD3	PE1P3	14.16	20.89	15.20	7.38	5.92						
		Physical Collocation - 2-Fiber Cross-Connect			CLO, ULDO3, ULD12, ULD48, U1TO3, U1T12, U1T48, UDLO3, UDL12, UDF	PE1F2	2.81	20.89	15.20	7.38	5.92						
		Physical Collocation - 4-Fiber Cross-Connect			ULDO3, ULD12, ULD48, U1TO3, U1T12, U1T48, UDLO3, UDL12, UDF	PE1F4	4.99	25.55	19.86	9.71	8.25						
		Physical Collocation - Space enclosure, welded wire, first 100 square feet			CLO	PE1BW	156.33										
		Physical Collocation - Space enclosure, welded wire, each additional 50 square feet			CLO	PE1CW	15.34										
		Physical Collocation - Security Access System - Security System per Central Office			CLO	PE1AX	45.70										
		Physical Collocation -Security Access System - New Card Activation, per Card Activation (First), per State			CLO	PE1A1	0.05	27.79									
		Physical Collocation-Security Access System-Administrative Change, existing Access Card, per Request, per State, per Card			CLO	PE1AA		7.79									
		Physical Collocation - Security Access System - Replace Lost or Stolen Card, per Card			CLO	PE1AR		22.78									
		Physical Collocation - Security Access - Initial Key, per Key			CLO	PE1AK		13.10									
		Physical Collocation - Security Access - Key, Replace Lost or Stolen Key, per Key			CLO	PE1AL		13.10									
		Physical Collocation - Space Availability Report, per Central Office Requested			CLO	PE1SR		1,075.17									
		Physical Collocation - CFA Information Resend Request, per premises, per request			CLO	PE1C9		77.56									
		Physical Collocation - Cable Records, per request			CLO	PE1CR		759.29	488.11	133.00							
		Physical Collocation, Cable Records, VG/DS0 Cable, per cable record (maximum 3600 records)			CLO	PE1CD		326.92		189.12							
		Physical Collocation, Cable Records, VG/DS0 Cable, per each 100 pair			CLO	PE1CO		4.81		5.90							
		Physical Collocation, Cable Records, DS1, per T1 TIE			CLO	PE1C1		2.25		2.76							
		Physical Collocation, Cable Records, DS3, per T3 TIE			CLO	PE1C3		7.88		9.66							
		Physical Collocation - Cable Records, Fiber Cable, per cable record (maximum 99 records)			CLO	PE1CB		84.49		77.13							
		Physical Collocation - Security Escort for Basic Time - normally scheduled work, per half hour			CLO	PE1BT		16.93	10.73								
		Physical Collocation - Security Escort for Overtime - outside of normally scheduled working hours on a scheduled work day, per half hour			CLO	PE1OT		22.05	13.86								
		Physical Collocation - Security Escort for Premium Time - outside of scheduled work day, per half hour			CLO	PE1PT		27.17	16.98								
		Physical Collocation - Virtual to Physical Collocation Relocation, per Voice Grade Circuit			CLO	PE1BV		33.00									
		Physical Collocation - Virtual to Physical Collocation Relocation, per DSO Circuit			CLO	PE1BO		33.00									
		Physical Collocation - Virtual to Physical Collocation Relocation, per DS1 Circuit			CLO	PE1B1		52.00									

COLLOCATION - Alabama														Attachment: 4		Exhibit: B	
CATEGORY		RATE ELEMENTS	Interim	Zone	BCS	USOC	RATES ($)					Svc Order Submitted Elec per LSR	Svc Order Submitted Manually per LSR	Incremental Charge - Manual Svc Order vs. Electronic-1st	Incremental Charge - Manual Svc Order vs. Electronic-Add'l	Incremental Charge - Manual Svc Order vs. Electronic-Disc 1st	Incremental Charge - Manual Svc Order vs. Electronic-Disc Add'l
							Rec	Nonrecurring		Nonrecurring Disconnect		OSS Rates ($)					
								First	Add'l	First	Add'l	SOMEC	SOMAN	SOMAN	SOMAN	SOMAN	SOMAN
		Physical Collocation - Virtual to Physical Collocation Relocation, per DS3 Circuit			CLO	PE1B3		52.00									
		Physical Collocation - Virtual to Physical Collocation In-Place, Per Voice Grade Circuit			CLO	PE1BR		23.00									
		Physical Collocation Virtual to Physical Collocation In-Place, Per DSO Circuit			CLO	PE1BP		23.00									
		Physical Collocation - Virtual to Physical Collocation In-Place, Per DS1 Circuit			CLO	PE1BS		33.00									
		Physical Collocation - Virtual to Physical Collocation In-Place, per DS3 Circuit			CLO	PE1BE		37.00									
		Physical Collocation - Virtual to Physical Collocation In-Place/Relocation, space cable facilities assigned to Collocation Space, per 700 cable pairs or fraction thereof			CLO	PE1B7		592.00									
		Physical Collocation - Co-Carrier Cross Connects/Direct Connect - Fiber Cable Support Structure, per linear ft.			CLO	PE1ES	0.0011										
		Physical Collocation - Co-Carrier Cross Connect/Direct Connect - Copper/Coax Cable Support Structure, per lin. ft.			CLO	PE1DS	0.0016										
		Physical Collocation - Co-Carrier Cross Connects/Direct Connect, Application Fee, per application			CLO	PE1DT		584.22									
		Physical Collocation - Copper Entrance Cable per Cable (CO manhole to vault splice)			CLO	PE1EA		1,196.424	42.721								
		Physical Collocation - Copper Entrance Cable Installation, per 100 Pairs			CLO	PE1EB		18.103									
		Physical Collocation - Fiber Entrance Cable per Cable (CO manhole to vault splice)			CLO	PE1EC		1,000.913	42.721								
		Physical Collocation - Fiber Entrance Cable Installation, per Fiber			CLO	PE1ED		7.241									
		Physical Collocation - Application Cost, Simple Augment			CLO	PE1KS		594.41		1.21							
		Physical Collocation - Application Cost, Minor Augment			CLO	PE1KM		833.47		1.21							
		Physical Collocation - Application Cost, Intermediate Augment			CLO	PE1K1		1,058.00		1.21							
		Physical Collocation - Co-Carrier Cross Connect/Direct Connect - Fiber Cable Support Structure, per cable	I		CLO	PE1DU		535.37									
		Physical Collocation - Co-Carrier Cross Connect/Direct Connect - Copper/Coax Cable Support Structure, per cable	I		CLO	PE1DV		535.37									
ADJACENT COLLOCATION																	
		Adjacent Collocation - Space Charge per Sq. Ft.			CLOAC	PE1JA	0.14										
		Adjacent Collocation - Electrical Facility Charge per Linear Ft.			CLOAC	PE1JC	5.41										
		Adjacent Collocation - 2-Wire Cross-Connects			UEA,UHL,UDL,UCL	PE1P2	0.02	12.30	11.80	6.03	5.44						
		Adjacent Collocation - 4-Wire Cross-Connects			UEA,UHL,UDL,UCL	PE1P4	0.04	12.39	11.87	6.39	5.73						
		Adjacent Collocation - DS1 Cross-Connects			UEA,UHL,UDL,UCL	PE1P1	1.03	22.03	15.93	6.40	5.79						
		Adjacent Collocation - DS3 Cross-Connects			UEA,UHL,UDL,UCL	PE1P3	13.95	20.89	15.20	7.38	5.92						
		Adjacent Collocation - 2-Fiber Cross-Connect			CLOAC	PE1F2	2.36	20.89	15.20	7.38	5.92						
		Adjacent Collocation - 4-Fiber Cross-Connect			CLOAC	PE1F4	4.52	25.55	19.86	9.71	8.25						
		Adjacent Collocation - Application Fee			CLOAC	PE1JB		1,576.69		0.51							
		Adjacent Collocation - 120V, Single Phase Standby Power Rate per AC Breaker Amp			CLOAC	PE1FB	4.91										
		Adjacent Collocation - 240V, Single Phase Standby Power Rate per AC Breaker Amp			CLOAC	PE1FD	9.84										
		Adjacent Collocation - 120V, Three Phase Standby Power Rate per AC Breaker Amp			CLOAC	PE1FE	14.74										
		Adjacent Collocation - 277V, Three Phase Standby Power Rate per AC Breaker Amp			CLOAC	PE1FG	34.06										
PHYSICAL COLLOCATION IN THE REMOTE SITE																	
		Physical Collocation in the Remote Site - Application Fee			CLORS	PE1RA		307.70		168.22							
		Cabinet Space in the Remote Site per Bay/ Rack			CLORS	PE1RB	201.42										
		Physical Collocation in the Remote Site - Security Access - Key			CLORS	PE1RD		13.10									
		Physical Collocation in the Remote Site - Space Availability Report per Premises Requested			CLORS	PE1SR		115.87									

COLLOCATION - Alabama														Attachment: 4		Exhibit: B	
CATEGORY		RATE ELEMENTS	Interim	Zone	BCS	USOC	RATES ($)					Svc Order Submitted Elec per LSR	Svc Order Submitted Manually per LSR	Incremental Charge - Manual Svc Order vs. Electronic-1st	Incremental Charge - Manual Svc Order vs. Electronic-Add'l	Incremental Charge - Manual Svc Order vs. Electronic-Disc 1st	Incremental Charge - Manual Svc Order vs. Electronic-Disc Add'l
							Rec	Nonrecurring		Nonrecurring Disconnect		OSS Rates ($)					
								First	Add'l	First	Add'l	SOMEC	SOMAN	SOMAN	SOMAN	SOMAN	SOMAN
		Physical Collocation in the Remote Site - Remote Site CLLI Code Request, per CLLI Code Requested			CLORS	PE1RE		37.56									
		Remote Site DLEC Data (BRSDD), per Compact Disk, per CO			CLORS	PE1RR		233.38									
		Physical Collocation - Security Escort for Basic Time - normally scheduled work, per half hour			CLORS	PE1BT		16.93	10.73								
		Physical Collocation - Security Escort for Overtime - outside of normally scheduled working hours on a scheduled work day, per half hour			CLORS	PE1OT		22.05	13.86								
		Physical Collocation - Security Escort for Premium Time - outside of scheduled work day, per half hour			CLORS	PE1PT		27.17	16.98								
PHYSICAL COLLOCATION IN THE REMOTE SITE - ADJACENT																	
		Remote Site-Adjacent Collocation - AC Power, per breaker amp	I		CLORS	PE1RS	6.27										
		Remote Site-Adjacent Collocation - Real Estate, per square foot	I		CLORS	PE1RT	0.134										
		Remote Site-Adjacent Collocation-Application Fee	I		CLORS	PE1RU		755.62	755.62								
	NOTE: If Security Escort and/or Add'l Engineering Fees become necessary for remote site collocation, the Parties will negotiate appropriate rates.																
VIRTUAL COLLOCATION																	
		Virtual Collocation - Application Fee			AMTFS	EAF		1,205.26		0.51							
		Virtual Collocation Administrative Only - Application Fee	I		AMTFS	VE1AF		742.15									
		Virtual Collocation - Cable Installation Cost, per cable			AMTFS	ESPCX		859.71		22.49							
		Virtual Collocation - Floor Space, per sq. ft.			AMTFS	ESPVX	3.22										
		Virtual Collocation - Power, per fused amp			AMTFS	ESPAX	7.83										
		Virtual Collocation - Cable Support Structure, per entrance cable			AMTFS	ESPSX	14.97										
		Virtual Collocation - 2-wire Cross Connects (loop)			UEANL,UEA,UDN,UDC,UAL,UHL,UCL,UEQ, UNCVX, UNCDX, UNCNX	UEAC2	0.03	12.30	11.80	6.03	5.44						
		Virtual Collocation - 4-wire Cross Connects (loop)			UEA,UHL,UCL,UDL, UAL, UDN, UNCVX, UNCDX	UEAC4	0.05	12.39	11.87	6.39	5.73						
		Virtual Collocation - 2-Fiber Cross Connects			UDL12, UDLO3, U1T48, U1T12, U1T03, ULDO3, ULD12, ULD48, UDF	CNC2F	2.84	20.89	15.20	7.38	5.92						
		Virtual Collocation - 4-Fiber Cross Connects			UDL12, UDLO3, U1T48, U1T12, U1T03, ULDO3, ULD12, ULD48, UDF	CNC4F	5.69	25.55	19.86	9.71	8.25						
		Virtual collocation - Special Access & UNE, cross-connect per DS1			USL,ULC, ULR, UXTD1, UNC1X, ULDD1, U1TD1, USLEL, UNLD1, UEPEX, UEPDX	CNC1X	1.11	22.03	15.93	6.40	5.79						
		Virtual collocation - Special Access & UNE, cross-connect per DS3			USL,UE3, U1TD3, UXTS1, UXTD3, UNC3X, UNCSX, ULDD3, U1TS1, ULDS1, UDLSX, UNLD3	CND3X	14.16	20.89	15.20	7.38	5.92						
		Virtual Collocation - Co-Carrier Cross Connects - Fiber Cable Support Structure, per linear foot			AMTFS	VE1CB	0.0026										
		Virtual Collocation - Co-Carrier Cross Connects - Copper/Coax Cable Support Structure, per linear ft			AMTFS	VE1CD	0.0038										
		Virtual Collocation - Co-Carrier Cross Connects - Fiber Cable Support Structure,per cable			AMTFS	VE1CC		535.37									

COLLOCATION - Alabama

CATEGORY		RATE ELEMENTS	Interim	Zone	BCS	USOC	RATES ($)					Svc Order Submitted Elec per LSR	Svc Order Submitted Manually per LSR	Attachment: 4		Exhibit: B	
														Incremental Charge - Manual Svc Order vs. Electronic-1st	Incremental Charge - Manual Svc Order vs. Electronic-Add'l	Incremental Charge - Manual Svc Order vs. Electronic-Disc 1st	Incremental Charge - Manual Svc Order vs. Electronic-Disc Add'l
							Rec	Nonrecurring		Nonrecurring Disconnect		OSS Rates ($)					
								First	Add'l	First	Add'l	SOMEC	SOMAN	SOMAN	SOMAN	SOMAN	SOMAN
		Virtual Collocation - Co-Carrier Cross Connects - Copper/Coax Cable Support Structure, per cable			AMTFS	VE1CE		535.37									
		Virtual Collocation Cable Records - per request			AMTFS	VE1BA		759.29	488.11	133.00							
		Virtual Collocation Cable Records - VG/DS0 Cable, per cable record			AMTFS	VE1BB		326.92	326.92	189.12							
		Virtual Collocaiton Cable Records - VG/DS0 Cable, per each 100 pair			AMTFS	VE1BC		4.81		5.90							
		Virtual Collocation Cable Records - DS1, per T1TIE			AMTFS	VE1BD		2.25		2.76							
		Virtual Collocation Cable Records - DS3, per T3TIE			AMTFS	VE1BE		7.88		9.66							
		Virtual Collocation Cable Records - Fiber Cable, per 99 fiber records			AMTFS	VE1BF		84.49		77.13							
		Virtual collocation - Security Escort - Basic, per half hour			AMTFS	SPTBX		16.93	10.73								
		Virtual collocation - Security Escort - Overtime, per half hour			AMTFS	SPTOX		22.05	13.86								
		Virtual collocation - Security Escort - Premium, per half hour			AMTFS	SPTPX		27.17	16.98								
		Virtual collocation - Maintenance in CO - Basic, per half hour			AMTFS	CTRLX		27.93	10.73								
		Virtual collocation - Maintenance in CO - Overtime, per half hour			AMTFS	SPTOM		36.47	13.86								
		Virtual collocation - Maintenance in CO - Premium per half hour			AMTFS	SPTPM		45.02	16.98								
		Virtual Collocation - Request Resend of CFA Information, per CLLI			AMTFS	VE1QR		77.56									
VIRTUAL COLLOCATION																	
		Virtual Collocation - 2-wire Cross Connect, Exchange Port 2-Wire Analog - Res			UEPSR	VE1R2	0.03	12.30	11.80	6.03	5.44						
		Virtual Collocation 2-Wire Cross Connect, Exchange Port 2-Wire Line Side PBX Trunk - Bus			UEPSP	VE1R2	0.03	12.30	11.80	6.03	5.44						
		Virtual Collocation 2-Wire Cross Connect, Exchange Port 2-Wire Voice Grade PBX Trunk - Res			UEPSE	VE1R2	0.03	12.30	11.80	6.03	5.44						
		Virtual Collocation 2-Wire Cross Connect, Exchange Port 2-Wire Analog Bus			UEPSB	VE1R2	0.03	12.30	11.80	6.03	5.44						
		Virtual Collocation 2-Wire Cross Connect, Exchnage Port 2-Wire ISDN			UEPSX	VE1R2	0.03	12.30	11.80	6.03	5.44						
		Virtual Collocation 2-Wire Cross Connect, Exchange Port 2-Wire ISDN			UEPTX	VE1R2	0.03	12.30	11.80	6.03	5.44						
		Virtual Collocation 4-Wire Cross Connect, Exchange Port 4-Wire ISDN DS1			UEPEX	VE1R4	0.05	12.39	11.87	6.39	5.44						

Note: Rates displaying an "R" in Interim column are interim and subject to rate true-up as set forth in General Terms and Conditions.

COLLOCATION - Florida														Attachment: 4		Exhibit: B	
CATEGORY		RATE ELEMENTS	Interim	Zone	BCS	USOC	RATES ($)					Svc Order Submitted Elec per LSR	Svc Order Submitted Manually per LSR	Incremental Charge - Manual Svc Order vs. Electronic-1st	Incremental Charge - Manual Svc Order vs. Electronic-Add'l	Incremental Charge - Manual Svc Order vs. Electronic-Disc 1st	Incremental Charge - Manual Svc Order vs. Electronic-Disc Add'l
							Rec	Nonrecurring		Nonrecurring Disconnect		OSS Rates ($)					
								First	Add'l	First	Add'l	SOMEC	SOMAN	SOMAN	SOMAN	SOMAN	SOMAN
PHYSICAL COLLOCATION																	
		Physical Collocation 2-Wire Cross Connect, Exchange Port 2-Wire Analog - Res			UEPSR	PE1R2	0.0276	8.22	7.22								
		Physical Collocation 2-Wire Cross Connect, Exchange Port 2-Wire Line Side PBX Trunk - Bus			UEPSP	PE1R2	0.0276	8.22	7.22								
		Physical Collocation 2-Wire Cross Connect, Exchange Port 2-Wire Voice Grade PBX Trunk - Res			UEPSE	PE1R2	0.0276	8.22	7.22								
		Physical Collocation 2-Wire Cross Connect, Exchange Port 2-Wire Analog - Bus			UEPSB	PE1R2	0.0276	8.22	7.22								
		Physical Collocation 2-Wire Cross Connect, Exchange Port 2-Wire ISDN			UEPSX	PE1R2	0.0276	8.22	7.22								
		Physical Collocation 2-Wire Cross Connect, Exchange Port 2-Wire ISDN			UEPTX	PE1R2	0.0276	8.22	7.22								
		Physical Collocation 4-Wire Cross Connect, Exchange Port 4-Wire ISDN DS1			UEPEX	PE1R4	0.0552	8.42	7.36								
PHYSICAL COLLOCATION																	
		Physical Collocation - Initial Application Fee			CLO	PE1BA		2,597.00									
		Physical Collocation - Subsequent Application Fee			CLO	PE1CA		2,236.00									
		Physical Collocation Administrative Only - Application Fee	I		CLO	PE1BL		742.00									
		Physical Collocation - Space Preparation - Firm Order Processing			CLO	PE1SJ		288.93									
		Physical Collocation - Space Preparation - C.O. Modification per square ft.			CLO	PE1SK	2.38										
		Physical Collocation - Space Preparation - Common Systems Modifications-Caged, per cage			CLO	PE1SM	92.55										
		Physical Collocation - Cable Installation, Pricing, non-recurring charge, per Entrance Cable			CLO	PE1BD		1,750.00		45.16							
		Physical Collocation - Floor Space, per sq feet			CLO	PE1PJ	7.86										
		Physical Collocation - Cable Support Structure, per Entrance Cable			CLO	PE1PM	18.96										
		Physical Collocation - Power, -48V DC Power - per Fused Amp			CLO	PE1PL	7.80										
		Physical Collocation - Power Reconfiguration Only, Application Fee	I		CLO	PE1PR		399.43									
		Physical Collocation - Power, 120V AC Power, Single Phase, per Breaker Amp			CLO	PE1FB	5.38										
		Physical Collocation - Power, 240V AC Power, Single Phase, per Breaker Amp			CLO	PE1FD	10.77										
		Physical Collocation - Power, 120V AC Power, Three Phase, per Breaker Amp			CLO	PE1FE	16.15										
		Physical Collocation - Power, 277V AC Power, Three Phase, per Breaker Amp			CLO	PE1FG	37.30										
		Physical Collocation - 2-wire cross-connect, loop, provisioning			UEANL,UEQ, UNLDX, UNCNX, UEA, UCL, UAL, UHL, UDC, UDN, UNCVX	PE1P2	0.0276	8.22	7.22	5.74	4.58						
		Physical Collocation - 4-wire cross-connect, loop, provisioning			UEA, UHL, UNCVX, UNCDX, UCL, UDL	PE1P4	0.0552	8.42	7.36	5.90	4.66						
		Physical Collocation -DS1 Cross-Connect for Physical Collocation, provisioning			WDS1L,WDS1S, UXTD1, ULDD1, USLEL, UNLD1, UEPEX, UEPDX, USL, ULC, U1TD1, UNC1X	PE1P1	1.32	27.77	15.52	5.93	4.77						

COLLOCATION - Florida

CATEGORY		RATE ELEMENTS	Interim	Zone	BCS	USOC	RATES ($)					Svc Order Submitted Elec per LSR	Svc Order Submitted Manually per LSR	Attachment: 4 Incremental Charge - Manual Svc Order vs. Electronic-1st	Attachment: 4 Incremental Charge - Manual Svc Order vs. Electronic-Add'l	Exhibit: B Incremental Charge - Manual Svc Order vs. Electronic-Disc 1st	Exhibit: B Incremental Charge - Manual Svc Order vs. Electronic-Disc Add'l
							Rec	Nonrecurring		Nonrecurring Disconnect		OSS Rates ($)					
								First	Add'l	First	Add'l	SOMEC	SOMAN	SOMAN	SOMAN	SOMAN	SOMAN
		Physical Collocation - DS3 Cross-Connect, provisioning			UE3,U1TD3, UXTD3, UXTS1, UNC3X, UNCSX, ULDD3, U1TS1,ULDS1, UNLD3	PE1P3	16.81	25.48	14.05	7.77	5.01						
		Physical Collocation - 2-Fiber Cross-Connect			CLO, ULDO3, ULD12, ULD48, U1TO3, U1T12, U1T48, UDLO3, UDL12, UDF	PE1F2	3.34	41.94	30.52	13.91	11.16						
		Physical Collocation - 4-Fiber Cross-Connect			ULDO3, ULD12, ULD48, U1TO3, U1T12, U1T48, UDLO3, UDL12, UDF	PE1F4	5.92	51.30	39.87	18.29	15.54						
		Physical Collocation - Space enclosure, welded wire, first 100 square feet			CLO	PE1BW	189.45										
		Physical Collocation - Space enclosure, welded wire, each additional 50 square feet			CLO	PE1CW	18.58										
		Physical Collocation - Security Access System - Security System per Central Office			CLO	PE1AY	0.0105										
		Physical Collocation -Security Access System - New Card Activation, per Card Activation (First), per State			CLO	PE1A1	0.0577	55.80									
		Physical Collocation-Security Access System-Administrative Change, existing Access Card, per Request, per State, per Card			CLO	PE1AA		15.65									
		Physical Collocation - Security Access System - Replace Lost or Stolen Card, per Card			CLO	PE1AR		45.75									
		Physical Collocation - Security Access - Initial Key, per Key			CLO	PE1AK		26.30									
		Physical Collocation - Security Access - Key, Replace Lost or Stolen Key, per Key			CLO	PE1AL		26.30									
		Physical Collocation - Space Availability Report, per Central Office Requested			CLO	PE1SR		2,159.00									
		Physical Collocation - CFA Information Resend Request, per premises, per request			CLO	PE1C9		77.54									
		Physical Collocation - Cable Records, per request			CLO	PE1CR		1,525.00	980.22	267.08							
		Physical Collocation, Cable Records, VG/DS0 Cable, per cable record (maximum 3600 records)			CLO	PE1CD		656.50		379.78							
		Physical Collocation, Cable Records, VG/DS0 Cable, per each 100 pair			CLO	PE1CO		9.66		11.84							
		Physical Collocation, Cable Records, DS1, per T1 TIE			CLO	PE1C1		4.52		5.54							
		Physical Collocation, Cable Records, DS3, per T3 TIE			CLO	PE1C3		15.82		19.40							
		Physical Collocation - Cable Records, Fiber Cable, per cable record (maximum 99 records)			CLO	PE1CB		169.67		154.89							
		Physical Collocation - Security Escort for Basic Time - normally scheduled work, per half hour			CLO	PE1BT		16.52	10.83								
		Physical Collocation - Security Escort for Overtime - outside of normally scheduled working hours on a scheduled work day, per half hour			CLO	PE1OT		21.92	14.19								
		Physical Collocation - Security Escort for Premium Time - outside of scheduled work day, per half hour			CLO	PE1PT		27.31	17.55								
		Physical Collocation - Virtual to Physical Collocation Relocation, per Voice Grade Circuit	I		CLO	PE1BV		33.00									
		Physical Collocation - Virtual to Physical Collocation Relocation, per DSO Circuit	I		CLO	PE1BO		33.00									
		Physical Collocation - Virtual to Physical Collocation Relocation, per DS1 Circuit	I		CLO	PE1B1		52.00									

COLLOCATION - Florida														Attachment: 4		Exhibit: B	
CATEGORY		RATE ELEMENTS	Interim	Zone	BCS	USOC	RATES ($)					Svc Order Submitted Elec per LSR	Svc Order Submitted Manually per LSR	Incremental Charge - Manual Svc Order vs. Electronic-1st	Incremental Charge - Manual Svc Order vs. Electronic-Add'l	Incremental Charge - Manual Svc Order vs. Electronic-Disc 1st	Incremental Charge - Manual Svc Order vs. Electronic-Disc Add'l
							Rec	Nonrecurring		Nonrecurring Disconnect		OSS Rates ($)					
								First	Add'l	First	Add'l	SOMEC	SOMAN	SOMAN	SOMAN	SOMAN	SOMAN
		Physical Collocation - Virtual to Physical Collocation Relocation, per DS3 Circuit	I		CLO	PE1B3		52.00									
		Physical Collocation - Virtual to Physical Collocation In-Place, Per Voice Grade Circuit	I		CLO	PE1BR		23.00									
		Physical Collocation Virtual to Physical Collocation In-Place, Per DSO Circuit	I		CLO	PE1BP		23.00									
		Physical Collocation - Virtual to Physical Collocation In-Place, Per DS1 Circuit	I		CLO	PE1BS		33.00									
		Physical Collocation - Virtual to Physical Collocation In-Place, per DS3 Circuit	I		CLO	PE1BE		37.00									
		Physical Collocation - Virtual to Physical Collocation In-Place/Relocation, space cable facilities assigned to Collocation Space, per 700 cable pairs or fraction thereof	I		CLO	PE1B7		592.00									
		Physical Collocation - Co-Carrier Cross Connects/Direct Connect - Fiber Cable Support Structure, per linear ft.			CLO	PE1ES	0.001										
		Physical Collocation - Co-Carrier Cross Connect/Direct Connect - Copper/Coax Cable Support Structure, per lin. ft.			CLO	PE1DS	0.0014										
		Physical Collocation - Co-Carrier Cross Connects/Direct Connect, Application Fee, per application			CLO	PE1DT		584.11									
		Physical Collocation - Copper Entrance Cable per Cable (CO manhole to vault splice)			CLO	PE1EA		1,169.133	42.712								
		Physical Collocation - Copper Entrance Cable Installation, per 100 Pairs			CLO	PE1EB		18.009									
		Physical Collocation - Fiber Entrance Cable per Cable (CO manhole to vault splice)			CLO	PE1EC		973.661	42.712								
		Physical Collocation - Fiber Entrance Cable Installation, per Fiber			CLO	PE1ED		7.24									
		Physical Collocation - Co-Carrier Cross Connect/Direct Connect - Fiber Cable Support Structure, per cable	I		CLO	PE1DU		535.54									
		Physical Collocation - Co-Carrier Cross Connect/Direct Connect - Copper/Coax Cable Support Structure, per cable	I		CLO	PE1DV		535.54									
ADJACENT COLLOCATION																	
		Adjacent Collocation - Space Charge per Sq. Ft.			CLOAC	PE1JA	0.1635										
		Adjacent Collocation - Electrical Facility Charge per Linear Ft.			CLOAC	PE1JC	5.11										
		Adjacent Collocation - 2-Wire Cross-Connects			UEA,UHL,UDL,UCL	PE1P2	0.0213	24.69	23.69	11.77	10.62						
		Adjacent Collocation - 4-Wire Cross-Connects			UEA,UHL,UDL,UCL	PE1P4	0.0426	24.88	23.83	12.04	10.80						
		Adjacent Collocation - DS1 Cross-Connects			UEA,UHL,UDL,UCL	PE1P1	1.22	44.24	31.98	12.07	10.91						
		Adjacent Collocation - DS3 Cross-Connects			UEA,UHL,UDL,UCL	PE1P3	16.56	41.94	30.52	13.91	11.15						
		Adjacent Collocation - 2-Fiber Cross-Connect			CLOAC	PE1F2	2.81	41.94	30.52	13.91	11.16						
		Adjacent Collocation - 4-Fiber Cross-Connect			CLOAC	PE1F4	5.36	51.30	39.87	18.29	15.54						
		Adjacent Collocation - Application Fee			CLOAC	PE1JB		2,785.00									
		Adjacent Collocation - 120V, Single Phase Standby Power Rate per AC Breaker Amp			CLOAC	PE1FB	5.38										
		Adjacent Collocation - 240V, Single Phase Standby Power Rate per AC Breaker Amp			CLOAC	PE1FD	10.77										
		Adjacent Collocation - 120V, Three Phase Standby Power Rate per AC Breaker Amp			CLOAC	PE1FE	16.15										
		Adjacent Collocation - 277V, Three Phase Standby Power Rate per AC Breaker Amp			CLOAC	PE1FG	37.30										
		Adjacent Collocation - Cable Support Structure per Entrance Cable	I		CLOAC	PE1PM	18.96										
PHYSICAL COLLOCATION IN THE REMOTE SITE																	
		Physical Collocation in the Remote Site - Application Fee			CLORS	PE1RA		617.91		328.81							
		Cabinet Space in the Remote Site per Bay/ Rack			CLORS	PE1RB	219.49										
		Physical Collocation in the Remote Site - Security Access - Key			CLORS	PE1RD		26.30									
		Physical Collocation in the Remote Site - Space Availability Report per Premises Requested			CLORS	PE1SR		232.69									

COLLOCATION - Florida														Attachment: 4		Exhibit: B	
CATEGORY		RATE ELEMENTS	Interim	Zone	BCS	USOC	RATES ($)					Svc Order Submitted Elec per LSR	Svc Order Submitted Manually per LSR	Incremental Charge - Manual Svc Order vs. Electronic-1st	Incremental Charge - Manual Svc Order vs. Electronic-Add'l	Incremental Charge - Manual Svc Order vs. Electronic-Disc 1st	Incremental Charge - Manual Svc Order vs. Electronic-Disc Add'l
							Rec	Nonrecurring		Nonrecurring Disconnect		OSS Rates ($)					
								First	Add'l	First	Add'l	SOMEC	SOMAN	SOMAN	SOMAN	SOMAN	SOMAN
		Physical Collocation in the Remote Site - Remote Site CLLI Code Request, per CLLI Code Requested			CLORS	PE1RE		75.41									
		Remote Site DLEC Data (BRSDD), per Compact Disk, per CO			CLORS	PE1RR		233.51									
		Physical Collocation - Security Escort for Basic Time - normally scheduled work, per half hour			CLORS	PE1BT		16.52	10.83								
		Physical Collocation - Security Escort for Overtime - outside of normally scheduled working hours on a scheduled work day, per half hour			CLORS	PE1OT		21.92	14.19								
		Physical Collocation - Security Escort for Premium Time - outside of scheduled work day, per half hour			CLORS	PE1PT		27.31	17.55								
PHYSICAL COLLOCATION IN THE REMOTE SITE - ADJACENT																	
		Remote Site-Adjacent Collocation - AC Power, per breaker amp			CLORS	PE1RS	6.27										
		Remote Site-Adjacent Collocation - Real Estate, per square foot			CLORS	PE1RT	0.134										
		Remote Site-Adjacent Collocation-Application Fee			CLORS	PE1RU		755.62	755.62								
	NOTE: If Security Escort and/or Add'l Engineering Fees become necessary for remote site collocation, the Parties will negotiate appropriate rates.																
VIRTUAL COLLOCATION																	
		Virtual Collocation - Application Fee			AMTFS	EAF		4,122.00	1,249.00								
		Virtual Collocation Administrative Only - Application Fee	I		AMTFS	VE1AF		742.00									
		Virtual Collocation - Cable Installation Cost, per cable			AMTFS	ESPCX	12.45	965.00									
		Virtual Collocation - Floor Space, per sq. ft.			AMTFS	ESPVX	4.25										
		Virtual Collocation - Power, per fused amp			AMTFS	ESPAX	6.95										
		Virtual Collocation - Cable Support Structure, per entrance cable			AMTFS	ESPSX	13.35										
		Virtual Collocation - 2-wire Cross Connects (loop)			UEANL,UEA,UDN,UDC,UAL,UHL,UCL,UEQ, UNCVX, UNCDX, UNCNX	UEAC2	0.0502	11.57									
		Virtual Collocation - 4-wire Cross Connects (loop)			UEA,UHL,UCL,UDL, UAL, UDN, UNCVX, UNCDX	UEAC4	0.0502	11.57									
		Virtual Collocation - 2-Fiber Cross Connects			UDL12, UDLO3, U1T48, U1T12, U1T03, ULDO3, ULD12, ULD48, UDF	CNC2F	6.71	2,431.00									
		Virtual Collocation - 4-Fiber Cross Connects			UDL12, UDLO3, U1T48, U1T12, U1T03, ULDO3, ULD12, ULD48, UDF	CNC4F	6.71	2,431.00									
		Virtual collocation - Special Access & UNE, cross-connect per DS1			USL,ULC, ULR, UXTD1, UNC1X, ULDD1, U1TD1, USLEL, UNLD1, UEPEX, UEPDX	CNC1X	7.50	155.00	14.00								
		Virtual collocation - Special Access & UNE, cross-connect per DS3			USL,UE3, U1TD3, UXTS1, UXTD3, UNC3X, UNCSX, ULDD3, U1TS1, ULDS1, UDLSX, UNLD3	CND3X	56.25	151.90	11.83								
		Virtual Collocation - Co-Carrier Cross Connects - Fiber Cable Support Structure, per linear foot			AMTFS	VE1CB	0.0028										
		Virtual Collocation - Co-Carrier Cross Connects - Copper/Coax Cable Support Structure, per linear ft			AMTFS	VE1CD	0.0041										
		Virtual Collocation - Co-Carrier Cross Connects - Fiber Cable Support Structure,per cable			AMTFS	VE1CC		535.54									

COLLOCATION - Florida														Attachment: 4		Exhibit: B	
CATEGORY		RATE ELEMENTS	Interim	Zone	BCS	USOC	RATES ($)					Svc Order Submitted Elec per LSR	Svc Order Submitted Manually per LSR	Incremental Charge - Manual Svc Order vs. Electronic-1st	Incremental Charge - Manual Svc Order vs. Electronic-Add'l	Incremental Charge - Manual Svc Order vs. Electronic-Disc 1st	Incremental Charge - Manual Svc Order vs. Electronic-Disc Add'l
							Rec	Nonrecurring		Nonrecurring Disconnect		OSS Rates ($)					
								First	Add'l	First	Add'l	SOMEC	SOMAN	SOMAN	SOMAN	SOMAN	SOMAN
		Virtual Collocation - Co-Carrier Cross Connects - Copper/Coax Cable Support Structure, per cable			AMTFS	VE1CE		535.54									
		Virtual Collocation Cable Records - per request			AMTFS	VE1BA		1,525.00		267.08							
		Virtual Collocation Cable Records - VG/DS0 Cable, per cable record			AMTFS	VE1BB		656.50		379.78							
		Virtual Collocation Cable Records - VG/DS0 Cable, per each 100 pair			AMTFS	VE1BC		9.66		11.84							
		Virtual Collocation Cable Records - DS1, per T1TIE			AMTFS	VE1BD		4.52		5.54							
		Virtual Collocation Cable Records - DS3, per T3TIE			AMTFS	VE1BE		15.82		19.40							
		Virtual Collocation Cable Records - Fiber Cable, per 99 fiber records			AMTFS	VE1BF		169.67		154.89							
		Virtual collocation - Security Escort - Basic, per quarter hour			AMTFS	SPTBQ		10.89									
		Virtual collocation - Security Escort - Overtime, per quarter hour			AMTFS	SPTOQ		13.64									
		Virtual collocation - Security Escort - Premium, per quarter hour			AMTFS	SPTPQ		16.40									
		Virtual Collocation - 2-wire Cross Connects (loop), per ckts			AMTFS	VE1R2	0.05	11.57									
		Virtual Collocation - 4-wire Cross Connects (loop), per ckts			AMTFS	VE1R4	0.05	11.57									
		Virtual Collocation - DS-1/DCS Cross Connects, PER CKTS			AMTFS	VE11S	8.09	69.64									
		Virtual Collocation - DS-1.DSX Cross Connects, PER CKTS			AMTFS	VE11X	0.41	69.64									
		Virtual Collocation - DS-3/DCS Cross Connects, PER CKT			AMTFS	VE13S	59.67	528.00									
		Virtual Collocation - DS-3/DSC Cross Connects, PER CKT			AMTFS	VE13X	10.06	528.00									
		Virtual collocation - Maintenance in CO - Basic, per quarter hour			AMTFS	SPTRE		10.89									
		Virtual collocation - Maintenance in CO - Overtime, per quarter hour			AMTFS	SPTOE		13.64									
		Virtual collocation - Maintenance in CO - Premium per quarter hour			AMTFS	SPTPE		16.40									
		Virtual Collocation - Request Resend of CFA Information, per CLLI			AMTFS	VE1QR		77.54									
VIRTUAL COLLOCATION																	
		Virtual Collocation - 2-wire Cross Connect, Exchange Port 2-Wire Analog - Res			UEPSR	VE1R2	0.0502	11.57	11.57								
		Virtual Collocation 2-Wire Cross Connect, Exchange Port 2-Wire Line Side PBX Trunk - Bus			UEPSP	VE1R2	0.0502	11.57	11.57								
		Virtual Collocation 2-Wire Cross Connect, Exchange Port 2-Wire Voice Grade PBX Trunk - Res			UEPSE	VE1R2	0.0502	11.57	11.57								
		Virtual Collocation 2-Wire Cross Connect, Exchange Port 2-Wire Analog Bus			UEPSB	VE1R2	0.0502	11.57	11.57								
		Virtual Collocation 2-Wire Cross Connect, Exchnage Port 2-Wire ISDN			UEPSX	VE1R2	0.0502	11.57	11.57								
		Virtual Collocation 2-Wire Cross Connect, Exchange Port 2-Wire ISDN			UEPTX	VE1R2	0.0502	11.57	11.57								
		Virtual Collocation 4-Wire Cross Connect, Exchange Port 4-Wire ISDN DS1			UEPEX	VE1R4	0.0502	11.57	11.57								
	Note: Rates displaying an "R" in Interim column are interim and subject to rate true-up as set forth in General Terms and Conditions.																

COLLOCATION - Georgia

CATEGORY		RATE ELEMENTS	Interim	Zone	BCS	USOC	RATES ($)					Svc Order Submitted Elec per LSR	Svc Order Submitted Manually per LSR	Attachment: 4		Exhibit: B	
														Incremental Charge - Manual Svc Order vs. Electronic-1st	Incremental Charge - Manual Svc Order vs. Electronic-Add'l	Incremental Charge - Manual Svc Order vs. Electronic-Disc 1st	Incremental Charge - Manual Svc Order vs. Electronic-Disc Add'l
							Rec	Nonrecurring		Nonrecurring Disconnect		OSS Rates ($)					
								First	Add'l	First	Add'l	SOMEC	SOMAN	SOMAN	SOMAN	SOMAN	SOMAN
PHYSICAL COLLOCATION																	
		Physical Collocation 2-Wire Cross Connect, Exchange Port 2-Wire Analog - Res	I		UEPSR	PE1R2	0.30	12.60	12.60								
		Physical Collocation 2-Wire Cross Connect, Exchange Port 2-Wire Line Side PBX Trunk - Bus	I		UEPSP	PE1R2	0.30	12.60	12.60								
		Physical Collocation 2-Wire Cross Connect, Exchange Port 2-Wire Voice Grade PBX Trunk - Res	I		UEPSE	PE1R2	0.30	12.60	12.60								
		Physical Collocation 2-Wire Cross Connect, Exchange Port 2-Wire Analog - Bus	I		UEPSB	PE1R2	0.30	12.60	12.60								
		Physical Collocation 2-Wire Cross Connect, Exchange Port 2-Wire ISDN	I		UEPSX	PE1R2	0.30	12.60	12.60								
		Physical Collocation 2-Wire Cross Connect, Exchange Port 2-Wire ISDN	I		UEPTX	PE1R2	0.30	12.60	12.60								
		Physical Collocation 4-Wire Cross Connect, Exchange Port 4-Wire ISDN DS1			UEPEX	PE1R4	0.50	12.60	12.60								
PHYSICAL COLLOCATION																	
		Physical Collocation - Initial Application Fee			CLO	PE1BA		1,285.98		0.59							
		Physical Collocation - Subsequent Application Fee			CLO	PE1CA		1,085.48		0.59							
		Physical Collocation Administrative Only - Application Fee			CLO	PE1BL		740.83									
		Physical Collocation - Space Preparation - Firm Order Processing			CLO	PE1SJ		141.10									
		Physical Collocation - Space Preparation - C.O. Modification per square ft.			CLO	PE1SK	2.01										
		Physical Collocation - Space Preparation, Common Systems Modifications-Cageless, per square foot			CLO	PE1SL	2.23										
		Physical Collocation - Space Preparation - Common Systems Modifications-Caged, per cage			CLO	PE1SM	75.61										
		Physical Collocation - Cable Installation, Pricing, non-recurring charge, per Entrance Cable			CLO	PE1BD		736.93		21.51							
		Physical Collocation - Floor Space, per sq feet			CLO	PE1PJ	4.52										
		Physical Collocation - Cable Support Structure, per Entrance Cable			CLO	PE1PM	7.21										
		Physical Collocation - Power, -48V DC Power - per Fused Amp			CLO	PE1PL	4.78										
		Physical Collocation - Power Reconfiguration Only, Application Fee	I		CLO	PE1PR		398.80									
		Physical Collocation - Power, 120V AC Power, Single Phase, per Breaker Amp			CLO	PE1FB	5.14										
		Physical Collocation - Power, 240V AC Power, Single Phase, per Breaker Amp			CLO	PE1FD	10.30										
		Physical Collocation - Power, 120V AC Power, Three Phase, per Breaker Amp			CLO	PE1FE	15.44										
		Physical Collocation - Power, 277V AC Power, Three Phase, per Breaker Amp			CLO	PE1FG	35.65										
		Physical Collocation - 2-wire cross-connect, loop, provisioning			UEANL,UEQ, UNLDX, UNCNX, UEA, UCL, UAL, UHL, UDC, UDN, UNCVX	PE1P2	0.0197										
		Physical Collocation - 4-wire cross-connect, loop, provisioning			UEA, UHL, UNCVX, UNCDX, UCL, UDL	PE1P4	0.0393										
		Physical Collocation -DS1 Cross-Connect for Physical Collocation, provisioning			WDS1L,WDS1S, UXTD1, ULDD1, USLEL, UNLD1, UEPEX, UEPDX, USL, ULC, U1TD1, UNC1X	PE1P1	0.3726										

COLLOCATION - Georgia														Attachment: 4		Exhibit: B	
CATEGORY		RATE ELEMENTS	Interim	Zone	BCS	USOC	RATES ($)					Svc Order Submitted Elec per LSR	Svc Order Submitted Manually per LSR	Incremental Charge - Manual Svc Order vs. Electronic-1st	Incremental Charge - Manual Svc Order vs. Electronic-Add'l	Incremental Charge - Manual Svc Order vs. Electronic-Disc 1st	Incremental Charge - Manual Svc Order vs. Electronic-Disc Add'l
							Rec	Nonrecurring		Nonrecurring Disconnect		OSS Rates ($)					
								First	Add'l	First	Add'l	SOMEC	SOMAN	SOMAN	SOMAN	SOMAN	SOMAN
		Physical Collocation - DS3 Cross-Connect, provisioning			UE3,U1TD3, UXTD3, UXTS1, UNC3X, UNCSX, ULDD3, U1TS1,ULDS1, UNLD3	PE1P3	4.06										
		Physical Collocation - 2-Fiber Cross-Connect			CLO, ULDO3, ULD12, ULD48, U1TO3, U1T12, U1T48, UDLO3, UDL12, UDF	PE1F2	1.72										
		Physical Collocation - 4-Fiber Cross-Connect			ULDO3, ULD12, ULD48, U1TO3, U1T12, U1T48, UDLO3, UDL12, UDF	PE1F4	3.30										
		Physical Collocation - Space enclosure, welded wire, first 100 square feet			CLO	PE1BW	160.45										
		Physical Collocation - Space enclosure, welded wire, each additional 50 square feet			CLO	PE1CW	15.74										
		Physical Collocation - Security Access System - Security System per Central Office, per Sq. Ft.			CLO	PE1AY	0.0106										
		Physical Collocation -Security Access System - New Card Activation, per Card Activation (First), per State			CLO	PE1A1		22.00									
		Physical Collocation - Security Access System - New Access Card Deactivation, per Card			CLO	PE1A4		8.72	8.72								
		Physical Collocation-Security Access System-Administrative Change, existing Access Card, per Request, per State, per Card			CLO	PE1AA		5.38									
		Physical Collocation - Security Access System - Replace Lost or Stolen Card, per Card			CLO	PE1AR		17.01									
		Physical Collocation - Security Access - Initial Key, per Key			CLO	PE1AK		13.20									
		Physical Collocation - Security Access - Key, Replace Lost or Stolen Key, per Key			CLO	PE1AL		13.20									
		Physical Collocation - Space Availability Report, per Central Office Requested			CLO	PE1SR		248.75									
		Physical Collocation - CFA Information Resend Request, per premises, per request			CLO	PE1C9		77.42									
		Physical Collocation - Cable Records, per request			CLO	PE1CR		743.65	478.06	125.75							
		Physical Collocation, Cable Records, VG/DS0 Cable, per cable record (maximum 3600 records)			CLO	PE1CD		317.60		177.77							
		Physical Collocation, Cable Records, VG/DS0 Cable, per each 100 pair			CLO	PE1CO		4.48		5.30							
		Physical Collocation, Cable Records, DS1, per T1 TIE			CLO	PE1C1		2.22		2.63							
		Physical Collocation, Cable Records, DS3, per T3 TIE			CLO	PE1C3		7.76		9.19							
		Physical Collocation - Cable Records, Fiber Cable, per cable record (maximum 99 records)			CLO	PE1CB		83.45		73.57							
		Physical Collocation - Security Escort for Basic Time - normally scheduled work, per half hour			CLO	PE1BT		16.52	10.83								
		Physical Collocation - Security Escort for Overtime - outside of normally scheduled working hours on a scheduled work day, per half hour			CLO	PE1OT		21.92	14.19								
		Physical Collocation - Security Escort for Premium Time - outside of scheduled work day, per half hour			CLO	PE1PT		27.31	17.55								
		Physical Collocation - Virtual to Physical Collocation Relocation, per Voice Grade Circuit			CLO	PE1BV		33.00									
		Physical Collocation - Virtual to Physical Collocation Relocation, per DSO Circuit			CLO	PE1BO		33.00									

COLLOCATION - Georgia

CATEGORY		RATE ELEMENTS	Interim	Zone	BCS	USOC	RATES ($)					Svc Order Submitted Elec per LSR	Svc Order Submitted Manually per LSR	Attachment: 4		Exhibit: B	
														Incremental Charge - Manual Svc Order vs. Electronic-1st	Incremental Charge - Manual Svc Order vs. Electronic-Add'l	Incremental Charge - Manual Svc Order vs. Electronic-Disc 1st	Incremental Charge - Manual Svc Order vs. Electronic-Disc Add'l
							Rec	Nonrecurring		Nonrecurring Disconnect		OSS Rates ($)					
								First	Add'l	First	Add'l	SOMEC	SOMAN	SOMAN	SOMAN	SOMAN	SOMAN
		Physical Collocation - Virtual to Physical Collocation Relocation, per DS1 Circuit			CLO	PE1B1		52.00									
		Physical Collocation - Virtual to Physical Collocation Relocation, per DS3 Circuit			CLO	PE1B3		52.00									
		Physical Collocation - Virtual to Physical Collocation In-Place, Per Voice Grade Circuit			CLO	PE1BR		23.00									
		Physical Collocation Virtual to Physical Collocation In-Place, Per DSO Circuit			CLO	PE1BP		23.00									
		Physical Collocation - Virtual to Physical Collocation In-Place, Per DS1 Circuit			CLO	PE1BS		33.00									
		Physical Collocation - Virtual to Physical Collocation In-Place, per DS3 Circuit			CLO	PE1BE		37.00									
		Physical Collocation - Virtual to Physical Collocation In-Place/Relocation, space cable facilities assigned to Collocation Space, per 700 cable pairs or fraction thereof			CLO	PE1B7		592.00									
		Physical Collocation - Co-Carrier Cross Connects/Direct Connect - Fiber Cable Support Structure, per linear ft.			CLO	PE1ES	0.001										
		Physical Collocation - Co-Carrier Cross Connect/Direct Connect - Copper/Coax Cable Support Structure, per lin. ft.			CLO	PE1DS	0.0015										
		Physical Collocation - Co-Carrier Cross Connects/Direct Connect, Application Fee, per application			CLO	PE1DT		583.18									
		Physical Collocation - Copper Entrance Cable per Cable (CO manhole to vault splice)			CLO	PE1EA		1,198.43	42.645								
		Physical Collocation - Copper Entrance Cable Installation, per 100 Pairs			CLO	PE1EB		18.071									
		Physical Collocation - Fiber Entrance Cable per Cable (CO manhole to vault splice)			CLO	PE1EC		1,003.267	42.645								
		Physical Collocation - Fiber Entrance Cable Installation, per Fiber			CLO	PE1ED		7.228									
		Physical Collocation - Application Cost, Simple Augment			CLO	PE1KS		594.05		1.21							
		Physical Collocation - Application Cost, Minor Augment			CLO	PE1KM		832.95		1.21							
		Physical Collocation - Application Cost, Intermediate Augment			CLO	PE1K1		1,057.00		1.21							
		Physical Collocation - Co-Carrier Cross Connect/Direct Connect - Fiber Cable Support Structure, per cable	I		CLO	PE1DU		553.43									
		Physical Collocation - Co-Carrier Cross Connect/Direct Connect - Copper/Coax Cable Support Structure, per cable	I		CLO	PE1DV		553.43									
		Physical Collocation, Entrance Cable Support Structure, Copper, per each 100 pairs or fraction thereof (CO Manhole to Frame)	I		CLO	PE1EE	0.2629										
		Physical Collocation, Entrance Cable Installation, Copper, per Cable (CO Manhole to Frame)	I		CLO	PE1EF		755.15		21.51							
		Physical Collocation, Entrance Cable Installation, Copper, per each 100 pairs or fraction thereof (CO Manhole to Frame)	I		CLO	PE1EG		9.12									
ADJACENT COLLOCATION																	
		Adjacent Collocation - Space Charge per Sq. Ft.			CLOAC	PE1JA	0.164										
		Adjacent Collocation - Electrical Facility Charge per Linear Ft.			CLOAC	PE1JC	4.01										
		Adjacent Collocation - 2-Wire Cross-Connects			UEA,UHL,UDL,UCL	PE1P2	0.0172										
		Adjacent Collocation - 4-Wire Cross-Connects			UEA,UHL,UDL,UCL	PE1P4	0.0344										
		Adjacent Collocation - DS1 Cross-Connects			UEA,UHL,UDL,UCL	PE1P1	0.3608										
		Adjacent Collocation - DS3 Cross-Connects			UEA,UHL,UDL,UCL	PE1P3	4.73										
		Adjacent Collocation - 2-Fiber Cross-Connect			CLOAC	PE1F2	1.66										
		Adjacent Collocation - 4-Fiber Cross-Connect			CLOAC	PE1F4	3.24										
		Adjacent Collocation - Application Fee			CLOAC	PE1JB		1,382.19		0.50							
		Adjacent Collocation - 120V, Single Phase Standby Power Rate per AC Breaker Amp			CLOAC	PE1FB	5.14										
		Adjacent Collocation - 240V, Single Phase Standby Power Rate per AC Breaker Amp			CLOAC	PE1FD	10.30										
		Adjacent Collocation - 120V, Three Phase Standby Power Rate per AC Breaker Amp			CLOAC	PE1FE	15.44										

COLLOCATION - Georgia														Attachment: 4		Exhibit: B	
CATEGORY		RATE ELEMENTS	Interim	Zone	BCS	USOC	RATES ($)					Svc Order Submitted Elec per LSR	Svc Order Submitted Manually per LSR	Incremental Charge - Manual Svc Order vs. Electronic-1st	Incremental Charge - Manual Svc Order vs. Electronic-Add'l	Incremental Charge - Manual Svc Order vs. Electronic-Disc 1st	Incremental Charge - Manual Svc Order vs. Electronic-Disc Add'l
							Rec	Nonrecurring		Nonrecurring Disconnect		OSS Rates ($)					
								First	Add'l	First	Add'l	SOMEC	SOMAN	SOMAN	SOMAN	SOMAN	SOMAN
		Adjacent Collocation - 277V, Three Phase Standby Power Rate per AC Breaker Amp			CLOAC	PE1FG	35.65										
		Adjacent Collocation - 240V, Three Phase Standby Power Rate per AC Breaker Amp	I		CLOAC	PE1JD	35.65										
PHYSICAL COLLOCATION IN THE REMOTE SITE																	
		Physical Collocation in the Remote Site - Application Fee			CLORS	PE1RA		300.61		132.62							
		Cabinet Space in the Remote Site per Bay/ Rack			CLORS	PE1RB	143.23										
		Physical Collocation in the Remote Site - Security Access - Key			CLORS	PE1RD		13.20									
		Physical Collocation in the Remote Site - Space Availability Report per Premises Requested			CLORS	PE1SR		109.94									
		Physical Collocation in the Remote Site - Remote Site CLLI Code Request, per CLLI Code Requested			CLORS	PE1RE		36.04									
		Remote Site DLEC Data (BRSDD), per Compact Disk, per CO			CLORS	PE1RR		116.64									
		Physical Collocation - Security Escort for Basic Time - normally scheduled work, per half hour			CLORS	PE1BT		16.52	10.83								
		Physical Collocation - Security Escort for Overtime - outside of normally scheduled working hours on a scheduled work day, per half hour			CLORS	PE1OT		21.92	14.19								
		Physical Collocation - Security Escort for Premium Time - outside of scheduled work day, per half hour			CLORS	PE1PT		27.31	17.55								
PHYSICAL COLLOCATION IN THE REMOTE SITE - ADJACENT																	
		Remote Site-Adjacent Collocation - AC Power, per breaker amp			CLORS	PE1RS	6.27										
		Remote Site-Adjacent Collocation - Real Estate, per square foot			CLORS	PE1RT	0.134										
		Remote Site-Adjacent Collocation-Application Fee			CLORS	PE1RU		755.62	755.62								
	NOTE: If Security Escort and/or Add'l Engineering Fees become necessary for remote site collocation, the Parties will negotiate appropriate rates.																
VIRTUAL COLLOCATION																	
		Virtual Collocation - Application Fee			AMTFS	EAF		609.52		0.59							
		Virtual Collocation Administrative Only - Application Fee	I		AMTFS	VE1AF		609.52									
		Virtual Collocation - Cable Installation Cost, per cable			AMTFS	ESPCX		736.93		21.51							
		Virtual Collocation - Floor Space, per sq. ft.			AMTFS	ESPVX	4.52										
		Virtual Collocation - Power, per fused amp			AMTFS	ESPAX	4.78										
		Virtual Collocation - Cable Support Structure, per entrance cable			AMTFS	ESPSX	7.57										
		Virtual Collocation - 2-wire Cross Connects (loop)			UEANL,UEA,UDN,UDC,UAL,UHL,UCL,UEQ, UNCVX, UNCDX, UNCNX	UEAC2	0.0188										
		Virtual Collocation - 4-wire Cross Connects (loop)			UEA,UHL,UCL,UDL, UAL, UDN, UNCVX, UNCDX	UEAC4	0.0375										
		Virtual Collocation - 2-Fiber Cross Connects			UDL12, UDLO3, U1T48, U1T12, U1T03, ULDO3, ULD12, ULD48, UDF	CNC2F	1.73										
		Virtual Collocation - 4-Fiber Cross Connects			UDL12, UDLO3, U1T48, U1T12, U1T03, ULDO3, ULD12, ULD48, UDF	CNC4F	3.45										
		Virtual collocation - Special Access & UNE, cross-connect per DS1			USL,ULC, ULR, UXTD1, UNC1X, ULDD1, U1TD1, USLEL, UNLD1, UEPEX, UEPDX	CNC1X	0.3726										

COLLOCATION - Georgia														Attachment: 4		Exhibit: B	
CATEGORY		RATE ELEMENTS	Interim	Zone	BCS	USOC	RATES ($)					Svc Order Submitted Elec per LSR	Svc Order Submitted Manually per LSR	Incremental Charge - Manual Svc Order vs. Electronic-1st	Incremental Charge - Manual Svc Order vs. Electronic-Add'l	Incremental Charge - Manual Svc Order vs. Electronic-Disc 1st	Incremental Charge - Manual Svc Order vs. Electronic-Disc Add'l
							Rec	Nonrecurring		Nonrecurring Disconnect		OSS Rates ($)					
								First	Add'l	First	Add'l	SOMEC	SOMAN	SOMAN	SOMAN	SOMAN	SOMAN
		Virtual collocation - Special Access & UNE, cross-connect per DS3			USL,UE3, U1TD3, UXTS1, UXTD3, UNC3X, UNCSX, ULDD3, U1TS1, ULDS1, UDLSX, UNLD3	CND3X	4.06										
		Virtual Collocation - Co-Carrier Cross Connects - Fiber Cable Support Structure, per linear foot			AMTFS	VE1CB	0.0023										
		Virtual Collocation - Co-Carrier Cross Connects - Copper/Coax Cable Support Structure, per linear ft			AMTFS	VE1CD	0.0034										
		Virtual Collocation - Co-Carrier Cross Connects - Fiber Cable Support Structure,per cable			AMTFS	VE1CC		553.43									
		Virtual Collocation - Co-Carrier Cross Connects - Copper/Coax Cable Support Structure, per cable			AMTFS	VE1CE		553.43									
		Virtual Collocation Cable Records - per request			AMTFS	VE1BA		743.65	478.06	125.75							
		Virtual Collocation Cable Records - VG/DS0 Cable, per cable record			AMTFS	VE1BB		317.60		177.77							
		Virtual Collocation Cable Records - VG/DS0 Cable, per each 100 pair			AMTFS	VE1BC		4.48		5.30							
		Virtual Collocation Cable Records - DS1, per T1TIE			AMTFS	VE1BD		2.22		2.63							
		Virtual Collocation Cable Records - DS3, per T3TIE			AMTFS	VE1BE		7.76		9.19							
		Virtual Collocation Cable Records - Fiber Cable, per 99 fiber records			AMTFS	VE1BF		83.45		73.57							
		Virtual collocation - Security Escort - Basic, per half hour			AMTFS	SPTBX		16.52	10.83								
		Virtual collocation - Security Escort - Overtime, per half hour			AMTFS	SPTOX		21.92	14.19								
		Virtual collocation - Security Escort - Premium, per half hour			AMTFS	SPTPX		27.31	17.55								
		Virtual collocation - Maintenance in CO - Basic, per half hour			AMTFS	CTRLX		26.54	10.83								
		Virtual collocation - Maintenance in CO - Overtime, per half hour			AMTFS	SPTOM		35.44	14.19								
		Virtual collocation - Maintenance in CO - Premium per half hour			AMTFS	SPTPM		44.34	17.55								
		Virtual Collocation - Request Resend of CFA Information, per CLLI			AMTFS	VE1QR		77.42									
		Virtual Collocation, Entrance Cable Support Structure, Copper, per each 100 pairs or fraction thereof (CO Manhole to Frame)	I		AMTFS	VE1EE	0.23										
		Virtual Collocation, Entrance Cable Installation, Copper, per Cable (CO Manhole to Frame)	I		AMTFS	VE1EF		755.15		21.51							
		Virtual Collocation, Entrance Cable Installation, Copper, per each 100 pairs or fraction thereof (CO Manhole to Frame)	I		AMTFS	VE1EG		9.12									
VIRTUAL COLLOCATION																	
		Virtual Collocation - 2-wire Cross Connect, Exchange Port 2-Wire Analog - Res			UEPSR	VE1R2	0.30	12.60	12.60								
		Virtual Collocation 2-Wire Cross Connect, Exchange Port 2-Wire Line Side PBX Trunk - Bus			UEPSP	VE1R2	0.30	12.60	12.60								
		Virtual Collocation 2-Wire Cross Connect, Exchange Port 2-Wire Voice Grade PBX Trunk - Res			UEPSE	VE1R2	0.30	12.60	12.60								
		Virtual Collocation 2-Wire Cross Connect, Exchange Port 2-Wire Analog Bus			UEPSB	VE1R2	0.30	12.60	12.60								
		Virtual Collocation 2-Wire Cross Connect, Exchnage Port 2-Wire ISDN			UEPSX	VE1R2	0.30	12.60	12.60								
		Virtual Collocation 2-Wire Cross Connect, Exchange Port 2-Wire ISDN			UEPTX	VE1R2	0.30	12.60	12.60								
		Virtual Collocation 4-Wire Cross Connect, Exchange Port 4-Wire ISDN DS1			UEPEX	VE1R4	0.50	12.60	12.60								
	Note: Rates displaying an "R" in Interim column are interim and subject to rate true-up as set forth in General Terms and Conditions.																

COLLOCATION - Kentucky														Attachment: 4		Exhibit: B	
CATEGORY		RATE ELEMENTS	Interim	Zone	BCS	USOC	RATES ($)					Svc Order Submitted Elec per LSR	Svc Order Submitted Manually per LSR	Incremental Charge - Manual Svc Order vs. Electronic-1st	Incremental Charge - Manual Svc Order vs. Electronic-Add'l	Incremental Charge - Manual Svc Order vs. Electronic-Disc 1st	Incremental Charge - Manual Svc Order vs. Electronic-Disc Add'l
							Rec	Nonrecurring		Nonrecurring Disconnect		OSS Rates ($)					
								First	Add'l	First	Add'l	SOMEC	SOMAN	SOMAN	SOMAN	SOMAN	SOMAN
PHYSICAL COLLOCATION																	
		Physical Collocation 2-Wire Cross Connect, Exchange Port 2-Wire Analog - Res			UEPSR	PE1R2	0.0333	24.68	23.68	12.14	10.95						
		Physical Collocation 2-Wire Cross Connect, Exchange Port 2-Wire Line Side PBX Trunk - Bus			UEPSP	PE1R2	0.0333	24.68	23.68	12.14	10.95						
		Physical Collocation 2-Wire Cross Connect, Exchange Port 2-Wire Voice Grade PBX Trunk - Res			UEPSE	PE1R2	0.0333	24.68	23.68	12.14	10.95						
		Physical Collocation 2-Wire Cross Connect, Exchange Port 2-Wire Analog - Bus			UEPSB	PE1R2	0.0333	24.68	23.68	12.14	10.95						
		Physical Collocation 2-Wire Cross Connect, Exchange Port 2-Wire ISDN			UEPSX	PE1R2	0.0333	24.68	23.68	12.14	10.95						
		Physical Collocation 2-Wire Cross Connect, Exchange Port 2-Wire ISDN			UEPTX	PE1R2	0.0333	24.68	23.68	12.14	10.95						
		Physical Collocation 4-Wire Cross Connect, Exchange Port 4-Wire ISDN DS1			UEPEX	PE1R4	1.48	44.23	31.98	12.81	11.57						
PHYSICAL COLLOCATION																	
		Physical Collocation - Initial Application Fee			CLO	PE1BA		3,773.54									
		Physical Collocation - Subsequent Application Fee			CLO	PE1CA		3,145.35									
		Physical Collocation Administrative Only - Application Fee			CLO	PE1BL		742.12									
		Physical Collocation - Space Preparation - Firm Order Processing			CLO	PE1SJ		1,206.07									
		Physical Collocation - Space Preparation - C.O. Modification per square ft.			CLO	PE1SK	2.32										
		Physical Collocation - Space Preparation, Common Systems Modifications-Cageless, per square foot			CLO	PE1SL	3.26										
		Physical Collocation - Space Preparation - Common Systems Modifications-Caged, per cage			CLO	PE1SM	110.57										
		Physical Collocation - Cable Installation, Pricing, non-recurring charge, per Entrance Cable			CLO	PE1BD		1,729.11		45.16							
		Physical Collocation - Floor Space, per sq feet			CLO	PE1PJ	7.99										
		Physical Collocation - Cable Support Structure, per Entrance Cable			CLO	PE1PM	19.86										
		Physical Collocation - Power, -48V DC Power - per Fused Amp			CLO	PE1PL	8.06										
		Physical Collocation - Power Reconfiguration Only, Application Fee	I		CLO	PE1PR		399.50									
		Physical Collocation - Power, 120V AC Power, Single Phase, per Breaker Amp			CLO	PE1FB	5.44										
		Physical Collocation - Power, 240V AC Power, Single Phase, per Breaker Amp			CLO	PE1FD	10.88										
		Physical Collocation - Power, 120V AC Power, Three Phase, per Breaker Amp			CLO	PE1FE	16.32										
		Physical Collocation - Power, 277V AC Power, Three Phase, per Breaker Amp			CLO	PE1FG	37.68										
		Physical Collocation - 2-wire cross-connect, loop, provisioning			UEANL,UEQ, UNLDX, UNCNX, UEA, UCL, UAL, UHL, UDC, UDN, UNCVX	PE1P2	0.0333	24.68	23.68	12.14	10.95						
		Physical Collocation - 4-wire cross-connect, loop, provisioning			UEA, UHL, UNCVX, UNCDX, UCL, UDL	PE1P4	0.0665	24.88	23.82	12.77	11.46						
		Physical Collocation -DS1 Cross-Connect for Physical Collocation, provisioning			WDS1L,WDS1S, UXTD1, ULDD1, USLEL, UNLD1, UEPEX, UEPDX, USL, ULC, U1TD1, UNC1X	PE1P1	1.48	44.23	31.98	12.81	11.57						

COLLOCATION - Kentucky														Attachment: 4		Exhibit: B	
CATEGORY		RATE ELEMENTS	Interim	Zone	BCS	USOC	RATES ($)					Svc Order Submitted Elec per LSR	Svc Order Submitted Manually per LSR	Incremental Charge - Manual Svc Order vs. Electronic-1st	Incremental Charge - Manual Svc Order vs. Electronic-Add'l	Incremental Charge - Manual Svc Order vs. Electronic-Disc 1st	Incremental Charge - Manual Svc Order vs. Electronic-Disc Add'l
							Rec	Nonrecurring		Nonrecurring Disconnect		OSS Rates ($)					
								First	Add'l	First	Add'l	SOMEC	SOMAN	SOMAN	SOMAN	SOMAN	SOMAN
		Physical Collocation - DS3 Cross-Connect, provisioning			UE3,U1TD3, UXTD3, UXTS1, UNC3X, UNCSX, ULDD3, U1TS1,ULDS1, UNLD3	PE1P3	18.89	41.93	30.51	14.75	11.83						
		Physical Collocation - 2-Fiber Cross-Connect			CLO, ULDO3, ULD12, ULD48, U1TO3, U1T12, U1T48, UDLO3, UDL12, UDF	PE1F2	3.75	41.93	30.51	14.76	11.84						
		Physical Collocation - 4-Fiber Cross-Connect			ULDO3, ULD12, ULD48, U1TO3, U1T12, U1T48, UDLO3, UDL12, UDF	PE1F4	6.65	51.29	39.87	19.41	16.49						
		Physical Collocation - Space enclosure, welded wire, first 100 square feet			CLO	PE1BW	184.97										
		Physical Collocation - Space enclosure, welded wire, each additional 50 square feet			CLO	PE1CW	18.14										
		Physical Collocation - Security Access System, Security System, per Central Office			CLO	PE1AX	76.10										
		Physical Collocation -Security Access System - New Card Activation, per Card Activation (First), per State			CLO	PE1A1	0.058	55.79									
		Physical Collocation-Security Access System-Administrative Change, existing Access Card, per Request, per State, per Card			CLO	PE1AA		15.64									
		Physical Collocation - Security Access System - Replace Lost or Stolen Card, per Card			CLO	PE1AR		45.74									
		Physical Collocation - Security Access - Initial Key, per Key			CLO	PE1AK		26.29									
		Physical Collocation - Security Access - Key, Replace Lost or Stolen Key, per Key			CLO	PE1AL		26.29									
		Physical Collocation - Space Availability Report, per Central Office Requested			CLO	PE1SR		2,158.67									
		Physical Collocation - CFA Information Resend Request, per premises, per request			CLO	PE1C9		77.55									
		Physical Collocation - Cable Records, per request			CLO	PE1CR		1,524.45	980.01	267.02							
		Physical Collocation, Cable Records, VG/DS0 Cable, per cable record (maximum 3600 records)			CLO	PE1CD		656.37		379.70							
		Physical Collocation, Cable Records, VG/DS0 Cable, per each 100 pair			CLO	PE1CO		9.65		11.84							
		Physical Collocation, Cable Records, DS1, per T1 TIE			CLO	PE1C1		4.52		5.54							
		Physical Collocation, Cable Records, DS3, per T3 TIE			CLO	PE1C3		15.81		19.39							
		Physical Collocation - Cable Records, Fiber Cable, per cable record (maximum 99 records)			CLO	PE1CB		169.63		154.85							
		Physical Collocation - Security Escort for Basic Time - normally scheduled work, per half hour			CLO	PE1BT		33.98	21.53								
		Physical Collocation - Security Escort for Overtime - outside of normally scheduled working hours on a scheduled work day, per half hour			CLO	PE1OT		44.26	27.81								
		Physical Collocation - Security Escort for Premium Time - outside of scheduled work day, per half hour			CLO	PE1PT		54.54	34.09								
		Physical Collocation - Virtual to Physical Collocation Relocation, per Voice Grade Circuit			CLO	PE1BV		33.00									
		Physical Collocation - Virtual to Physical Collocation Relocation, per DSO Circuit			CLO	PE1BO		33.00									
		Physical Collocation - Virtual to Physical Collocation Relocation, per DS1 Circuit			CLO	PE1B1		52.00									

COLLOCATION - Kentucky														Attachment: 4		Exhibit: B	
CATEGORY		RATE ELEMENTS	Interim	Zone	BCS	USOC	RATES ($)					Svc Order Submitted Elec per LSR	Svc Order Submitted Manually per LSR	Incremental Charge - Manual Svc Order vs. Electronic-1st	Incremental Charge - Manual Svc Order vs. Electronic-Add'l	Incremental Charge - Manual Svc Order vs. Electronic-Disc 1st	Incremental Charge - Manual Svc Order vs. Electronic-Disc Add'l
							Rec	Nonrecurring		Nonrecurring Disconnect		OSS Rates ($)					
								First	Add'l	First	Add'l	SOMEC	SOMAN	SOMAN	SOMAN	SOMAN	SOMAN
		Physical Collocation - Virtual to Physical Collocation Relocation, per DS3 Circuit			CLO	PE1B3		52.00									
		Physical Collocation - Virtual to Physical Collocation In-Place, Per Voice Grade Circuit			CLO	PE1BR		23.00									
		Physical Collocation Virtual to Physical Collocation In-Place, Per DSO Circuit			CLO	PE1BP		23.00									
		Physical Collocation - Virtual to Physical Collocation In-Place, Per DS1 Circuit			CLO	PE1BS		33.00									
		Physical Collocation - Virtual to Physical Collocation In-Place, per DS3 Circuit			CLO	PE1BE		37.00									
		Physical Collocation - Virtual to Physical Collocation In-Place/Relocation, space cable facilities assigned to Collocation Space, per 700 cable pairs or fraction thereof			CLO	PE1B7		592.00									
		Physical Collocation - Co-Carrier Cross Connects/Direct Connect - Fiber Cable Support Structure, per linear ft.			CLO	PE1ES	0.0012										
		Physical Collocation - Co-Carrier Cross Connect/Direct Connect - Copper/Coax Cable Support Structure, per lin. ft.			CLO	PE1DS	0.0018										
		Physical Collocation - Co-Carrier Cross Connects/Direct Connect, Application Fee, per application			CLO	PE1DT		584.20									
		Physical Collocation - Copper Entrance Cable per Cable (CO manhole to vault splice)			CLO	PE1EA		1,224.485	42.719								
		Physical Collocation - Copper Entrance Cable Installation, per 100 Pairs			CLO	PE1EB		18.102									
		Physical Collocation - Fiber Entrance Cable per Cable (CO manhole to vault splice)			CLO	PE1EC		1,028.981	42.719								
		Physical Collocation - Fiber Entrance Cable Installation, per Fiber			CLO	PE1ED		7.241									
		Physical Collocation - Application Cost, Simple Augment			CLO	PE1KS		594.98		1.21							
		Physical Collocation - Application Cost, Minor Augment			CLO	PE1KM		834.26		1.21							
		Physical Collocation - Application Cost, Intermediate Augment			CLO	PE1K1		1,059.00		1.21							
		Physical Collocation - Co-Carrier Cross Connect/Direct Connect - Fiber Cable Support Structure, per cable	I		CLO	PE1DU		535.55									
		Physical Collocation - Co-Carrier Cross Connect/Direct Connect - Copper/Coax Cable Support Structure, per cable	I		CLO	PE1DV		535.55									
ADJACENT COLLOCATION																	
		Adjacent Collocation - Space Charge per Sq. Ft.			CLOAC	PE1JA	0.0173										
		Adjacent Collocation - Electrical Facility Charge per Linear Ft.			CLOAC	PE1JC	5.35										
		Adjacent Collocation - 2-Wire Cross-Connects			UEA,UHL,UDL,UCL	PE1P2	0.0258	24.68	23.68	12.14	10.95						
		Adjacent Collocation - 4-Wire Cross-Connects			UEA,UHL,UDL,UCL	PE1P4	0.0515	24.88	23.82	12.77	11.46						
		Adjacent Collocation - DS1 Cross-Connects			UEA,UHL,UDL,UCL	PE1P1	1.37	44.23	31.98	12.81	11.57						
		Adjacent Collocation - DS3 Cross-Connects			UEA,UHL,UDL,UCL	PE1P3	18.61	41.93	30.51	14.75	11.83						
		Adjacent Collocation - 2-Fiber Cross-Connect			CLOAC	PE1F2	3.15	41.93	30.51	14.76	11.84						
		Adjacent Collocation - 4-Fiber Cross-Connect			CLOAC	PE1F4	6.02	51.29	39.87	19.41	16.49						
		Adjacent Collocation - Application Fee			CLOAC	PE1JB		3,165.50									
		Adjacent Collocation - 120V, Single Phase Standby Power Rate per AC Breaker Amp			CLOAC	PE1FB	5.44										
		Adjacent Collocation - 240V, Single Phase Standby Power Rate per AC Breaker Amp			CLOAC	PE1FD	10.88										
		Adjacent Collocation - 120V, Three Phase Standby Power Rate per AC Breaker Amp			CLOAC	PE1FE	16.32										
		Adjacent Collocation - 277V, Three Phase Standby Power Rate per AC Breaker Amp			CLOAC	PE1FG	37.68										
PHYSICAL COLLOCATION IN THE REMOTE SITE																	
		Physical Collocation in the Remote Site - Application Fee			CLORS	PE1RA		617.78		338.89							
		Cabinet Space in the Remote Site per Bay/ Rack			CLORS	PE1RB	219.67										
		Physical Collocation in the Remote Site - Security Access - Key			CLORS	PE1RD		26.29									
		Physical Collocation in the Remote Site - Space Availability Report per Premises Requested			CLORS	PE1SR		232.64									

COLLOCATION - Kentucky														Attachment: 4		Exhibit: B	
CATEGORY		RATE ELEMENTS	Interim	Zone	BCS	USOC	RATES ($)					Svc Order Submitted Elec per LSR	Svc Order Submitted Manually per LSR	Incremental Charge - Manual Svc Order vs. Electronic-1st	Incremental Charge - Manual Svc Order vs. Electronic-Add'l	Incremental Charge - Manual Svc Order vs. Electronic-Disc 1st	Incremental Charge - Manual Svc Order vs. Electronic-Disc Add'l
							Rec	Nonrecurring		Nonrecurring Disconnect		OSS Rates ($)					
								First	Add'l	First	Add'l	SOMEC	SOMAN	SOMAN	SOMAN	SOMAN	SOMAN
		Physical Collocation in the Remote Site - Remote Site CLLI Code Request, per CLLI Code Requested			CLORS	PE1RE		75.40									
		Remote Site DLEC Data (BRSDD), per Compact Disk, per CO			CLORS	PE1RR		233.42									
		Physical Collocation - Security Escort for Basic Time - normally scheduled work, per half hour			CLORS	PE1BT		33.98	21.53								
		Physical Collocation - Security Escort for Overtime - outside of normally scheduled working hours on a scheduled work day, per half hour			CLORS	PE1OT		44.26	27.81								
		Physical Collocation - Security Escort for Premium Time - outside of scheduled work day, per half hour			CLORS	PE1PT		54.54	34.09								
PHYSICAL COLLOCATION IN THE REMOTE SITE - ADJACENT																	
		Remote Site-Adjacent Collocation - AC Power, per breaker amp			CLORS	PE1RS	6.27										
		Remote Site-Adjacent Collocation - Real Estate, per square foot			CLORS	PE1RT	0.134										
		Remote Site-Adjacent Collocation-Application Fee			CLORS	PE1RU		755.62	755.62								
	NOTE: If Security Escort and/or Add'l Engineering Fees become necessary for remote site collocation, the Parties will negotiate appropriate rates.																
VIRTUAL COLLOCATION																	
		Virtual Collocation - Application Fee			AMTFS	EAF		2,419.86		1.01							
		Virtual Collocation Administrative Only - Application Fee	I		AMTFS	VE1AF		742.12									
		Virtual Collocation - Cable Installation Cost, per cable			AMTFS	ESPCX		1,729.11		45.16							
		Virtual Collocation - Floor Space, per sq. ft.			AMTFS	ESPVX	7.99										
		Virtual Collocation - Power, per fused amp			AMTFS	ESPAX	8.06										
		Virtual Collocation - Cable Support Structure, per entrance cable			AMTFS	ESPSX	17.38										
		Virtual Collocation - 2-wire Cross Connects (loop)			UEANL,UEA,UDN,UDC,UAL,UHL,UCL,UEQ, UNCVX, UNCDX, UNCNX	UEAC2	0.0309	24.68	23.68	12.14	10.95						
		Virtual Collocation - 4-wire Cross Connects (loop)			UEA,UHL,UCL,UDL, UAL, UDN, UNCVX, UNCDX	UEAC4	0.0619	24.88	23.82	12.77	11.46						
		Virtual Collocation - 2-Fiber Cross Connects			UDL12, UDLO3, U1T48, U1T12, U1T03, ULDO3, ULD12, ULD48, UDF	CNC2F	3.80	41.94	30.51	14.76	11.84						
		Virtual Collocation - 4-Fiber Cross Connects			UDL12, UDLO3, U1T48, U1T12, U1T03, ULDO3, ULD12, ULD48, UDF	CNC4F	7.59	51.29	39.87	19.41	16.49						
		Virtual collocation - Special Access & UNE, cross-connect per DS1			USL,ULC, ULR, UXTD1, UNC1X, ULDD1, U1TD1, USLEL, UNLD1, UEPEX, UEPDX	CNC1X	1.48	44.23	31.98	12.81	11.57						
		Virtual collocation - Special Access & UNE, cross-connect per DS3			USL,UE3, U1TD3, UXTS1, UXTD3, UNC3X, UNCSX, ULDD3, U1TS1, ULDS1, UDLSX, UNLD3	CND3X	18.89	41.93	30.51	14.75	11.83						
		Virtual Collocation - Co-Carrier Cross Connects - Fiber Cable Support Structure, per linear foot			AMTFS	VE1CB	0.003										
		Virtual Collocation - Co-Carrier Cross Connects - Copper/Coax Cable Support Structure, per linear ft			AMTFS	VE1CD	0.0045										
		Virtual Collocation - Co-Carrier Cross Connects - Fiber Cable Support Structure,per cable			AMTFS	VE1CC		535.55									

COLLOCATION - Kentucky														Attachment: 4		Exhibit: B	
CATEGORY		RATE ELEMENTS	Interim	Zone	BCS	USOC	RATES ($)					Svc Order Submitted Elec per LSR	Svc Order Submitted Manually per LSR	Incremental Charge - Manual Svc Order vs. Electronic-1st	Incremental Charge - Manual Svc Order vs. Electronic-Add'l	Incremental Charge - Manual Svc Order vs. Electronic-Disc 1st	Incremental Charge - Manual Svc Order vs. Electronic-Disc Add'l
							Rec	Nonrecurring		Nonrecurring Disconnect		OSS Rates ($)					
								First	Add'l	First	Add'l	SOMEC	SOMAN	SOMAN	SOMAN	SOMAN	SOMAN
		Virtual Collocation - Co-Carrier Cross Connects - Copper/Coax Cable Support Structure, per cable			AMTFS	VE1CE		535.55									
		Virtual Collocation Cable Records - per request			AMTFS	VE1BA		1,524.45	980.01	267.02							
		Virtual Collocation Cable Records - VG/DS0 Cable, per cable record			AMTFS	VE1BB		656.37		379.70							
		Virtual Collocation Cable Records - VG/DS0 Cable, per each 100 pair			AMTFS	VE1BC		9.65		11.84							
		Virtual Collocation Cable Records -DS1, per T1TIE			AMTFS	VE1BD		4.52		5.54							
		Virtual Collocation Cable Records - DS3, per T3TIE			AMTFS	VE1BE		15.81		19.39							
		Virtual Collocation Cable Records - Fiber Cable, per 99 fiber records			AMTFS	VE1BF		169.63		154.85							
		Virtual collocation - Security Escort - Basic, per half hour			AMTFS	SPTBX		33.98	21.53								
		Virtual collocation - Security Escort - Overtime, per half hour			AMTFS	SPTOX		44.26	27.81								
		Virtual collocation - Security Escort - Premium, per half hour			AMTFS	SPTPX		54.54	34.09								
		Virtual collocation - Maintenance in CO - Basic, per half hour			AMTFS	CTRLX		56.07	21.53								
		Virtual collocation - Maintenance in CO - Overtime, per half hour			AMTFS	SPTOM		73.23	27.81								
		Virtual collocation - Maintenance in CO - Premium per half hour			AMTFS	SPTPM		90.39	34.09								
		Virtual Collocation - Request Resend of CFA Information, per CLLI			AMTFS	VE1QR		77.55									
VIRTUAL COLLOCATION																	
		Virtual Collocation - 2-wire Cross Connect, Exchange Port 2-Wire Analog - Res			UEPSR	VE1R2	0.0309	24.68	23.68	12.14	10.95						
		Virtual Collocation 2-Wire Cross Connect, Exchange Port 2-Wire Line Side PBX Trunk - Bus			UEPSP	VE1R2	0.0309	24.68	23.68	12.14	10.95						
		Virtual Collocation 2-Wire Cross Connect, Exchange Port 2-Wire Voice Grade PBX Trunk - Res			UEPSE	VE1R2	0.0309	24.68	23.68	12.14	10.95						
		Virtual Collocation 2-Wire Cross Connect, Exchange Port 2-Wire Analog Bus			UEPSB	VE1R2	0.0309	24.68	23.68	12.14	10.95						
		Virtual Collocation 2-Wire Cross Connect, Exchnage Port 2-Wire ISDN			UEPSX	VE1R2	0.0309	24.68	23.68	12.14	10.95						
		Virtual Collocation 2-Wire Cross Connect, Exchange Port 2-Wire ISDN			UEPTX	VE1R2	0.0309	24.68	23.68	12.14	10.95						
		Virtual Collocation 4-Wire Cross Connect, Exchange Port 4-Wire ISDN DS1			UEPEX	VE1R4	1.48	44.23	31.98	12.81	11.57						
	Note: Rates displaying an "R" in Interim column are interim and subject to rate true-up as set forth in General Terms and Conditions.																

COLLOCATION - Louisiana

CATEGORY		RATE ELEMENTS	Interim	Zone	BCS	USOC	RATES ($)					Svc Order Submitted Elec per LSR	Svc Order Submitted Manually per LSR	Attachment: 4		Exhibit: B	
														Incremental Charge - Manual Svc Order vs. Electronic-1st	Incremental Charge - Manual Svc Order vs. Electronic-Add'l	Incremental Charge - Manual Svc Order vs. Electronic-Disc 1st	Incremental Charge - Manual Svc Order vs. Electronic-Disc Add'l
							Rec	Nonrecurring		Nonrecurring Disconnect		OSS Rates ($)					
								First	Add'l	First	Add'l	SOMEC	SOMAN	SOMAN	SOMAN	SOMAN	SOMAN
PHYSICAL COLLOCATION																	
		Physical Collocation 2-Wire Cross Connect, Exchange Port 2-Wire Analog - Res			UEPSR	PE1R2	0.0318	11.94	11.46								
		Physical Collocation 2-Wire Cross Connect, Exchange Port 2-Wire Line Side PBX Trunk - Bus			UEPSP	PE1R2	0.0318	11.94	11.46								
		Physical Collocation 2-Wire Cross Connect, Exchange Port 2-Wire Voice Grade PBX Trunk - Res			UEPSE	PE1R2	0.0318	11.94	11.46								
		Physical Collocation 2-Wire Cross Connect, Exchange Port 2-Wire Analog - Bus			UEPSB	PE1R2	0.0318	11.94	11.46								
		Physical Collocation 2-Wire Cross Connect, Exchange Port 2-Wire ISDN			UEPSX	PE1R2	0.0318	11.94	11.46								
		Physical Collocation 2-Wire Cross Connect, Exchange Port 2-Wire ISDN			UEPTX	PE1R2	0.0318	11.94	11.46								
		Physical Collocation 4-Wire Cross Connect, Exchange Port 4-Wire ISDN DS1			UEPEX	PE1R4	0.0636	12.04	11.53								
PHYSICAL COLLOCATION																	
		Physical Collocation - Initial Application Fee			CLO	PE1BA		1,837.24									
		Physical Collocation - Subsequent Application Fee			CLO	PE1CA		1,533.41									
		Physical Collocation Administrative Only - Application Fee			CLO	PE1BL		741.97									
		Physical Collocation - Space Preparation - Firm Order Processing			CLO	PE1SJ		583.33									
		Physical Collocation - Space Preparation - C.O. Modification per square ft.			CLO	PE1SK	2.31										
		Physical Collocation - Space Preparation, Common Systems Modifications-Cageless, per square foot			CLO	PE1SL	2.70										
		Physical Collocation - Space Preparation - Common Systems Modifications-Caged, per cage			CLO	PE1SM	91.60										
		Physical Collocation - Cable Installation, Pricing, non-recurring charge, per Entrance Cable			CLO	PE1BD		841.54									
		Physical Collocation - Floor Space, per sq feet			CLO	PE1PJ	5.30										
		Physical Collocation - Cable Support Structure, per Entrance Cable			CLO	PE1PM	18.31										
		Physical Collocation - Power, -48V DC Power - per Fused Amp	I		CLO	PE1PL	8.32										
		Physical Collocation - Power Reconfiguration Only, Application Fee	I		CLO	PE1PR		398.76									
		Physical Collocation - Power, 120V AC Power, Single Phase, per Breaker Amp			CLO	PE1FB	5.45										
		Physical Collocation - Power, 240V AC Power, Single Phase, per Breaker Amp			CLO	PE1FD	10.92										
		Physical Collocation - Power, 120V AC Power, Three Phase, per Breaker Amp			CLO	PE1FE	16.37										
		Physical Collocation - Power, 277V AC Power, Three Phase, per Breaker Amp			CLO	PE1FG	37.80										
		Physical Collocation - 2-wire cross-connect, loop, provisioning			UEANL,UEQ, UNLDX, UNCNX, UEA, UCL, UAL, UHL, UDC, UDN, UNCVX	PE1P2	0.0318	11.94	11.46								
		Physical Collocation - 4-wire cross-connect, loop, provisioning			UEA, UHL, UNCVX, UNCDX, UCL, UDL	PE1P4	0.0636	12.04	11.53								
		Physical Collocation -DS1 Cross-Connect for Physical Collocation, provisioning			WDS1L,WDS1S, UXTD1, ULDD1, USLEL, UNLD1, UEPEX, UEPDX, USL, ULC, U1TD1, UNC1X	PE1P1	1.04	21.39	15.47								

COLLOCATION - Louisiana														Attachment: 4		Exhibit: B	
CATEGORY		RATE ELEMENTS	Interim	Zone	BCS	USOC	RATES ($)					Svc Order Submitted Elec per LSR	Svc Order Submitted Manually per LSR	Incremental Charge - Manual Svc Order vs. Electronic-1st	Incremental Charge - Manual Svc Order vs. Electronic-Add'l	Incremental Charge - Manual Svc Order vs. Electronic-Disc 1st	Incremental Charge - Manual Svc Order vs. Electronic-Disc Add'l
							Rec	Nonrecurring		Nonrecurring Disconnect		OSS Rates ($)					
								First	Add'l	First	Add'l	SOMEC	SOMAN	SOMAN	SOMAN	SOMAN	SOMAN
		Physical Collocation - DS3 Cross-Connect, provisioning			UE3,U1TD3, UXTD3, UXTS1, UNC3X, UNCSX, ULDD3, U1TS1,ULDS1, UNLD3	PE1P3	13.21	20.28	14.76								
		Physical Collocation - 2-Fiber Cross-Connect			CLO, ULDO3, ULD12, ULD48, U1TO3, U1T12, U1T48, UDLO3, UDL12, UDF	PE1F2	2.62	20.28	14.76								
		Physical Collocation - 4-Fiber Cross-Connect			ULDO3, ULD12, ULD48, U1TO3, U1T12, U1T48, UDLO3, UDL12, UDF	PE1F4	4.65	24.81	19.29								
		Physical Collocation - Space enclosure, welded wire, first 100 square feet			CLO	PE1BW	184.50										
		Physical Collocation - Space enclosure, welded wire, each additional 50 square feet			CLO	PE1CW	18.10										
		Physical Collocation - Security Access System - Security System per Central Office, per Sq. Ft.			CLO	PE1AY	0.0224										
		Physical Collocation -Security Access System - New Card Activation, per Card Activation (First), per State			CLO	PE1A1	0.0579	27.50									
		Physical Collocation-Security Access System-Administrative Change, existing Access Card, per Request, per State, per Card			CLO	PE1AA		7.74									
		Physical Collocation - Security Access System - Replace Lost or Stolen Card, per Card			CLO	PE1AR		22.64									
		Physical Collocation - Security Access - Initial Key, per Key			CLO	PE1AK		13.01									
		Physical Collocation - Security Access - Key, Replace Lost or Stolen Key, per Key			CLO	PE1AL		13.01									
		Physical Collocation - Space Availability Report, per Central Office Requested			CLO	PE1SR		1,044.07									
		Physical Collocation - CFA Information Resend Request, per premises, per request			CLO	PE1C9		77.43									
		Recurring Collocation Cable Records - per request			CLO	PE1CU	10.97										
		Recurring Collocation Cable Records - VG/DS0 Cable, per cable record			CLO	PE1CE	5.29										
		Recurring Collocation Cable Records - VG/DS0 Cable, per each 100 pair			CLO	PE1CT	0.08										
		Recurring Collocation Cable Records - DS1, per T1TIE			CLO	PE1C2	0.04										
		Recurring Collocation Cable Records - DS3, per T3TIE			CLO	PE1C4	0.13										
		Recurring Collocation Cable Records - Fiber Cable, per 99 fiber records			CLO	PE1CG	1.37										
		Physical Collocation - Security Escort for Basic Time - normally scheduled work, per half hour			CLO	PE1BT		16.44	10.42								
		Physical Collocation - Security Escort for Overtime - outside of normally scheduled working hours on a scheduled work day, per half hour			CLO	PE1OT		21.41	13.45								
		Physical Collocation - Security Escort for Premium Time - outside of scheduled work day, per half hour			CLO	PE1PT		26.38	16.49								
		Physical Collocation - Virtual to Physical Collocation Relocation, per Voice Grade Circuit			CLO	PE1BV		33.00									
		Physical Collocation - Virtual to Physical Collocation Relocation, per DSO Circuit			CLO	PE1BO		33.00									
		Physical Collocation - Virtual to Physical Collocation Relocation, per DS1 Circuit			CLO	PE1B1		52.00									

COLLOCATION - Louisiana														Attachment: 4		Exhibit: B	
CATEGORY		RATE ELEMENTS	Interim	Zone	BCS	USOC	RATES ($)					Svc Order Submitted Elec per LSR	Svc Order Submitted Manually per LSR	Incremental Charge - Manual Svc Order vs. Electronic-1st	Incremental Charge - Manual Svc Order vs. Electronic-Add'l	Incremental Charge - Manual Svc Order vs. Electronic-Disc 1st	Incremental Charge - Manual Svc Order vs. Electronic-Disc Add'l
							Rec	Nonrecurring		Nonrecurring Disconnect		OSS Rates ($)					
								First	Add'l	First	Add'l	SOMEC	SOMAN	SOMAN	SOMAN	SOMAN	SOMAN
		Physical Collocation - Virtual to Physical Collocation Relocation, per DS3 Circuit			CLO	PE1B3		52.00									
		Physical Collocation - Virtual to Physical Collocation In-Place, Per Voice Grade Circuit			CLO	PE1BR		23.00									
		Physical Collocation Virtual to Physical Collocation In-Place, Per DSO Circuit			CLO	PE1BP		23.00									
		Physical Collocation - Virtual to Physical Collocation In-Place, Per DS1 Circuit			CLO	PE1BS		33.00									
		Physical Collocation - Virtual to Physical Collocation In-Place, per DS3 Circuit			CLO	PE1BE		37.00									
		Physical Collocation - Virtual to Physical Collocation In-Place/Relocation, space cable facilities assigned to Collocation Space, per 700 cable pairs or fraction thereof			CLO	PE1B7		592.00									
		Physical Collocation - Co-Carrier Cross Connects/Direct Connect - Fiber Cable Support Structure, per linear ft.			CLO	PE1ES	0.001										
		Physical Collocation - Co-Carrier Cross Connect/Direct Connect - Copper/Coax Cable Support Structure, per lin. ft.			CLO	PE1DS	0.0015										
		Physical Collocation - Co-Carrier Cross Connects/Direct Connect, Application Fee, per application			CLO	PE1DT		583.30									
		Physical Collocation - Copper Entrance Cable per Cable (CO manhole to vault splice)			CLO	PE1EA		1,358.81	42.653								
		Physical Collocation - Copper Entrance Cable Installation, per 100 Pairs			CLO	PE1EB		18.074									
		Physical Collocation - Fiber Entrance Cable per Cable (CO manhole to vault splice)			CLO	PE1EC		1,163.609	42.653								
		Physical Collocation - Fiber Entrance Cable Installation, per Fiber			CLO	PE1ED		7.23									
		Physical Collocation - Application Cost, Simple Augment			CLO	PE1KS		596.35		1.22							
		Physical Collocation - Application Cost, Minor Augment			CLO	PE1KM		836.18		1.22							
		Physical Collocation - Application Cost, Intermediate Augment			CLO	PE1K1		1,061.00		1.22							
		Physical Collocation - Co-Carrier Cross Connect/Direct Connect - Fiber Cable Support Structure, per cable	I		CLO	PE1DU		534.79									
		Physical Collocation - Co-Carrier Cross Connect/Direct Connect - Copper/Coax Cable Support Structure, per cable	I		CLO	PE1DV		534.79									
ADJACENT COLLOCATION																	
		Adjacent Collocation - Space Charge per Sq. Ft.			CLOAC	PE1JA	0.0552										
		Adjacent Collocation - Electrical Facility Charge per Linear Ft.			CLOAC	PE1JC	5.61										
		Adjacent Collocation - 2-Wire Cross-Connects			UEA,UHL,UDL,UCL	PE1P2	0.0245	11.94	11.46								
		Adjacent Collocation - 4-Wire Cross-Connects			UEA,UHL,UDL,UCL	PE1P4	0.0491	12.04	11.53								
		Adjacent Collocation - DS1 Cross-Connects			UEA,UHL,UDL,UCL	PE1P1	0.9605	21.39	15.47								
		Adjacent Collocation - DS3 Cross-Connects			UEA,UHL,UDL,UCL	PE1P3	13.01	20.28	14.76								
		Adjacent Collocation - 2-Fiber Cross-Connect			CLOAC	PE1F2	2.20	20.28	14.76								
		Adjacent Collocation - 4-Fiber Cross-Connect			CLOAC	PE1F4	4.21	24.81	19.29								
		Adjacent Collocation - Application Fee			CLOAC	PE1JB		1,543.20									
		Adjacent Collocation - 120V, Single Phase Standby Power Rate per AC Breaker Amp			CLOAC	PE1FB	5.45										
		Adjacent Collocation - 240V, Single Phase Standby Power Rate per AC Breaker Amp			CLOAC	PE1FD	10.92										
		Adjacent Collocation - 120V, Three Phase Standby Power Rate per AC Breaker Amp			CLOAC	PE1FE	16.37										
		Adjacent Collocation - 277V, Three Phase Standby Power Rate per AC Breaker Amp			CLOAC	PE1FG	37.80										
PHYSICAL COLLOCATION IN THE REMOTE SITE																	
		Physical Collocation in the Remote Site - Application Fee			CLORS	PE1RA		298.80									
		Cabinet Space in the Remote Site per Bay/ Rack			CLORS	PE1RB	225.39										
		Physical Collocation in the Remote Site - Security Access - Key			CLORS	PE1RD		13.01									
		Physical Collocation in the Remote Site - Space Availability Report per Premises Requested			CLORS	PE1SR		112.52									

COLLOCATION - Louisiana														Attachment: 4		Exhibit: B	
CATEGORY		RATE ELEMENTS	Interim	Zone	BCS	USOC	RATES ($)					Svc Order Submitted Elec per LSR	Svc Order Submitted Manually per LSR	Incremental Charge - Manual Svc Order vs. Electronic-1st	Incremental Charge - Manual Svc Order vs. Electronic-Add'l	Incremental Charge - Manual Svc Order vs. Electronic-Disc 1st	Incremental Charge - Manual Svc Order vs. Electronic-Disc Add'l
							Rec	Nonrecurring		Nonrecurring Disconnect		OSS Rates ($)					
								First	Add'l	First	Add'l	SOMEC	SOMAN	SOMAN	SOMAN	SOMAN	SOMAN
		Physical Collocation in the Remote Site - Remote Site CLLI Code Request, per CLLI Code Requested			CLORS	PE1RE		36.47									
		Remote Site DLEC Data (BRSDD), per Compact Disk, per CO			CLORS	PE1RR		233.21									
		Physical Collocation - Security Escort for Basic Time - normally scheduled work, per half hour			CLORS	PE1BT		16.44	10.42								
		Physical Collocation - Security Escort for Overtime - outside of normally scheduled working hours on a scheduled work day, per half hour			CLORS	PE1OT		21.41	13.45								
		Physical Collocation - Security Escort for Premium Time - outside of scheduled work day, per half hour			CLORS	PE1PT		26.38	16.49								
PHYSICAL COLLOCATION IN THE REMOTE SITE - ADJACENT																	
		Remote Site-Adjacent Collocation - AC Power, per breaker amp			CLORS	PE1RS	6.27										
		Remote Site-Adjacent Collocation - Real Estate, per square foot			CLORS	PE1RT	0.134										
		Remote Site-Adjacent Collocation-Application Fee			CLORS	PE1RU		755.62	755.62								
	NOTE: If Security Escort and/or Add'l Engineering Fees become necessary for remote site collocation, the Parties will negotiate appropriate rates.																
VIRTUAL COLLOCATION																	
		Virtual Collocation - Application Fee			AMTFS	EAF		1,770.40									
		Virtual Collocation Administrative Only - Application Fee	I		AMTFS	VE1AF		741.97									
		Virtual Collocation - Cable Installation Cost, per cable			AMTFS	ESPCX		841.54									
		Virtual Collocation - Floor Space, per sq. ft.			AMTFS	ESPVX	3.20										
		Virtual Collocation - Power, per fused amp			AMTFS	ESPAX	8.32										
		Virtual Collocation - Cable Support Structure, per entrance cable			AMTFS	ESPSX	16.02										
		Virtual Collocation - 2-wire Cross Connects (loop)			UEANL,UEA,UDN,UDC,UAL,UHL,UCL,UEQ, UNCVX, UNCDX, UNCNX	UEAC2	0.0296	11.94	11.46								
		Virtual Collocation - 4-wire Cross Connects (loop)			UEA,UHL,UCL,UDL, UAL, UDN, UNCVX, UNCDX	UEAC4	0.0591	12.04	11.53								
		Virtual Collocation - 2-Fiber Cross Connects			UDL12, UDLO3, U1T48, U1T12, U1T03, ULDO3, ULD12, ULD48, UDF	CNC2F	2.65	20.29	14.76								
		Virtual Collocation - 4-Fiber Cross Connects			UDL12, UDLO3, U1T48, U1T12, U1T03, ULDO3, ULD12, ULD48, UDF	CNC4F	5.31	24.81	19.29								
		Virtual collocation - Special Access & UNE, cross-connect per DS1			USL,ULC, ULR, UXTD1, UNC1X, ULDD1, U1TD1, USLEL, UNLD1, UEPEX, UEPDX	CNC1X	1.04	21.39	15.47								
		Virtual collocation - Special Access & UNE, cross-connect per DS3			USL,UE3, U1TD3, UXTS1, UXTD3, UNC3X, UNCSX, ULDD3, U1TS1, ULDS1, UDLSX, UNLD3	CND3X	13.21	20.28	14.76								
		Virtual Collocation - Co-Carrier Cross Connects - Fiber Cable Support Structure, per linear foot			AMTFS	VE1CB	0.0024										
		Virtual Collocation - Co-Carrier Cross Connects - Copper/Coax Cable Support Structure, per linear ft			AMTFS	VE1CD	0.0036										
		Virtual Collocation - Co-Carrier Cross Connects - Fiber Cable Support Structure,per cable			AMTFS	VE1CC		534.79									

COLLOCATION - Louisiana														Attachment: 4		Exhibit: B	
CATEGORY		RATE ELEMENTS	Interim	Zone	BCS	USOC	RATES ($)					Svc Order Submitted Elec per LSR	Svc Order Submitted Manually per LSR	Incremental Charge - Manual Svc Order vs. Electronic-1st	Incremental Charge - Manual Svc Order vs. Electronic-Add'l	Incremental Charge - Manual Svc Order vs. Electronic-Disc 1st	Incremental Charge - Manual Svc Order vs. Electronic-Disc Add'l
							Rec	Nonrecurring		Nonrecurring Disconnect		OSS Rates ($)					
								First	Add'l	First	Add'l	SOMEC	SOMAN	SOMAN	SOMAN	SOMAN	SOMAN
		Virtual Collocation - Co-Carrier Cross Connects - Copper/Coax Cable Support Structure, per cable			AMTFS	VE1CE		534.79									
		Virtual Collocation Cable Records - per request			AMTFS	VE1BA	10.97										
		Virtual Collocation Cable Records - VG/DS0 Cable, per cable record			AMTFS	VE1BB	5.29										
		Virtual Collocation Cable Records - VG/DS0 Cable, per each 100 pair			AMTFS	VE1BC	0.08										
		Virtual Collocation Cable Records - DS1, per T1TIE			AMTFS	VE1BD	0.04										
		Virtual Collocation Cable Records - DS3, per T3TIE			AMTFS	VE1BE	0.13										
		Virtual Collocation Cable Records - Fiber Cable, per 99 fiber records			AMTFS	VE1BF	1.37										
		Virtual collocation - Security Escort - Basic, per half hour			AMTFS	SPTBX		16.44	10.42								
		Virtual collocation - Security Escort - Overtime, per half hour			AMTFS	SPTOX		21.41	13.45								
		Virtual collocation - Security Escort - Premium, per half hour			AMTFS	SPTPX		26.38	16.49								
		Virtual collocation - Maintenance in CO - Basic, per half hour			AMTFS	CTRLX		27.12	10.42								
		Virtual collocation - Maintenance in CO - Overtime, per half hour			AMTFS	SPTOM		35.42	13.45								
		Virtual collocation - Maintenance in CO - Premium per half hour			AMTFS	SPTPM		43.72	16.49								
		Virtual Collocation - Request Resend of CFA Information, per CLLI			AMTFS	VE1QR		77.43									
VIRTUAL COLLOCATION																	
		Virtual Collocation - 2-wire Cross Connect, Exchange Port 2-Wire Analog - Res			UEPSR	VE1R2	0.0296	11.94	11.46								
		Virtual Collocation 2-Wire Cross Connect, Exchange Port 2-Wire Line Side PBX Trunk - Bus			UEPSP	VE1R2	0.0296	11.94	11.46								
		Virtual Collocation 2-Wire Cross Connect, Exchange Port 2-Wire Voice Grade PBX Trunk - Res			UEPSE	VE1R2	0.0296	11.94	11.46								
		Virtual Collocation 2-Wire Cross Connect, Exchange Port 2-Wire Analog Bus			UEPSB	VE1R2	0.0296	11.94	11.46								
		Virtual Collocation 2-Wire Cross Connect, Exchnage Port 2-Wire ISDN			UEPSX	VE1R2	0.0296	11.94	11.46								
		Virtual Collocation 2-Wire Cross Connect, Exchange Port 2-Wire ISDN			UEPTX	VE1R2	0.0296	11.94	11.46								
		Virtual Collocation 4-Wire Cross Connect, Exchange Port 4-Wire ISDN DS1			UEPEX	VE1R4	0.0591	12.04	11.53								
	Note: Rates displaying an "R" in Interim column are interim and subject to rate true-up as set forth in General Terms and Conditions.																

COLLOCATION - Mississippi														Attachment: 4		Exhibit: B	
CATEGORY		RATE ELEMENTS	Interim	Zone	BCS	USOC	RATES ($)					Svc Order Submitted Elec per LSR	Svc Order Submitted Manually per LSR	Incremental Charge - Manual Svc Order vs. Electronic-1st	Incremental Charge - Manual Svc Order vs. Electronic-Add'l	Incremental Charge - Manual Svc Order vs. Electronic-Disc 1st	Incremental Charge - Manual Svc Order vs. Electronic-Disc Add'l
							Rec	Nonrecurring		Nonrecurring Disconnect		OSS Rates ($)					
								First	Add'l	First	Add'l	SOMEC	SOMAN	SOMAN	SOMAN	SOMAN	SOMAN
PHYSICAL COLLOCATION																	
		Physical Collocation 2-Wire Cross Connect, Exchange Port 2-Wire Analog - Res			UEPSR	PE1R2	0.0288	12.37	11.87	6.04	5.45						
		Physical Collocation 2-Wire Cross Connect, Exchange Port 2-Wire Line Side PBX Trunk - Bus			UEPSP	PE1R2	0.0288	12.37	11.87	6.04	5.45						
		Physical Collocation 2-Wire Cross Connect, Exchange Port 2-Wire Voice Grade PBX Trunk - Res			UEPSE	PE1R2	0.0288	12.37	11.87	6.04	5.45						
		Physical Collocation 2-Wire Cross Connect, Exchange Port 2-Wire Analog - Bus			UEPSB	PE1R2	0.0288	12.37	11.87	6.04	5.45						
		Physical Collocation 2-Wire Cross Connect, Exchange Port 2-Wire ISDN			UEPSX	PE1R2	0.0288	12.37	11.87	6.04	5.45						
		Physical Collocation 2-Wire Cross Connect, Exchange Port 2-Wire ISDN			UEPTX	PE1R2	0.0288	12.37	11.87	6.04	5.45						
		Physical Collocation 4-Wire Cross Connect, Exchange Port 4-Wire ISDN DS1			UEPEX	PE1R4	0.0576	12.47	11.94	6.59	5.91						
PHYSICAL COLLOCATION																	
		Physical Collocation - Initial Application Fee			CLO	PE1BA		1,890.38									
		Physical Collocation - Subsequent Application Fee			CLO	PE1CA		1,575.69									
		Physical Collocation Administrative Only - Application Fee			CLO	PE1BL		740.76									
		Physical Collocation - Space Preparation - Firm Order Processing	I		CLO	PE1SJ		604.19									
		Physical Collocation - Space Preparation - C.O. Modification per square ft.	I		CLO	PE1SK	2.30										
		Physical Collocation - Space Preparation, Common Systems Modifications-Cageless, per square foot	I		CLO	PE1SL	2.52										
		Physical Collocation - Space Preparation - Common Systems Modifications-Caged, per cage	I		CLO	PE1SM	85.67										
		Physical Collocation - Cable Installation, Pricing, non-recurring charge, per Entrance Cable			CLO	PE1BD		926.27		22.62							
		Physical Collocation - Floor Space, per sq feet			CLO	PE1PJ	5.74										
		Physical Collocation - Cable Support Structure, per Entrance Cable			CLO	PE1PM	17.42										
		Physical Collocation - Power, -48V DC Power - per Fused Amp	I		CLO	PE1PL	7.33										
		Physical Collocation - Power Reconfiguration Only, Application Fee	I		CLO	PE1PR		398.76									
		Physical Collocation - Power, 120V AC Power, Single Phase, per Breaker Amp	I		CLO	PE1FB	5.29										
		Physical Collocation - Power, 240V AC Power, Single Phase, per Breaker Amp	I		CLO	PE1FD	10.58										
		Physical Collocation - Power, 120V AC Power, Three Phase, per Breaker Amp	I		CLO	PE1FE	15.87										
		Physical Collocation - Power, 277V AC Power, Three Phase, per Breaker Amp	I		CLO	PE1FG	36.65										
		Physical Collocation - 2-wire cross-connect, loop, provisioning			UEANL,UEQ, UNLDX, UNCNX, UEA, UCL, UAL, UHL, UDC, UDN, UNCVX	PE1P2	0.0288	12.37	11.87	6.04	5.45						
		Physical Collocation - 4-wire cross-connect, loop, provisioning			UEA, UHL, UNCVX, UNCDX, UCL, UDL	PE1P4	0.0576	12.47	11.94	6.59	5.91						
		Physical Collocation -DS1 Cross-Connect for Physical Collocation, provisioning			WDS1L,WDS1S, UXTD1, ULDD1, USLEL, UNLD1, UEPEX, UEPDX, USL, ULC, U1TD1, UNC1X	PE1P1	1.14	22.16	16.02	6.60	5.97						

COLLOCATION - Mississippi														Attachment: 4		Exhibit: B	
CATEGORY		RATE ELEMENTS	Interim	Zone	BCS	USOC	RATES ($)					Svc Order Submitted Elec per LSR	Svc Order Submitted Manually per LSR	Incremental Charge - Manual Svc Order vs. Electronic-1st	Incremental Charge - Manual Svc Order vs. Electronic-Add'l	Incremental Charge - Manual Svc Order vs. Electronic-Disc 1st	Incremental Charge - Manual Svc Order vs. Electronic-Disc Add'l
							Rec	Nonrecurring		Nonrecurring Disconnect		OSS Rates ($)					
								First	Add'l	First	Add'l	SOMEC	SOMAN	SOMAN	SOMAN	SOMAN	SOMAN
		Physical Collocation - DS3 Cross-Connect, provisioning			UE3,U1TD3, UXTD3, UXTS1, UNC3X, UNCSX, ULDD3, U1TS1,ULDS1, UNLD3	PE1P3	14.49	21.01	15.29	7.61	6.10						
		Physical Collocation - 2-Fiber Cross-Connect			CLO, ULDO3, ULD12, ULD48, U1TO3, U1T12, U1T48, UDLO3, UDL12, UDF	PE1F2	2.87	21.01	15.29	7.61	6.10						
		Physical Collocation - 4-Fiber Cross-Connect			ULDO3, ULD12, ULD48, U1TO3, U1T12, U1T48, UDLO3, UDL12, UDF	PE1F4	5.10	25.70	19.97	10.01	8.50						
		Physical Collocation - Space enclosure, welded wire, first 100 square feet			CLO	PE1BW	183.20										
		Physical Collocation - Space enclosure, welded wire, each additional 50 square feet			CLO	PE1CW	17.97										
		Physical Collocation - Security Access System, Security System, per Central Office	I		CLO	PE1AX	75.23										
		Physical Collocation -Security Access System - New Card Activation, per Card Activation (First), per State	I		CLO	PE1A1	0.0576	27.95									
		Physical Collocation-Security Access System-Administrative Change, existing Access Card, per Request, per State, per Card	I		CLO	PE1AA		7.84									
		Physical Collocation - Security Access System - Replace Lost or Stolen Card, per Card			CLO	PE1AR		22.91									
		Physical Collocation - Security Access - Initial Key, per Key			CLO	PE1AK		13.17									
		Physical Collocation - Security Access - Key, Replace Lost or Stolen Key, per Key			CLO	PE1AL		13.17									
		Physical Collocation - Space Availability Report, per Central Office Requested	I		CLO	PE1SR		1,081.40									
		Physical Collocation - CFA Information Resend Request, per premises, per request			CLO	PE1C9		77.41									
		Physical Collocation - Cable Records, per request			CLO	PE1CR		763.69	490.94	133.77							
		Physical Collocation, Cable Records, VG/DS0 Cable, per cable record (maximum 3600 records)			CLO	PE1CD		328.81		190.22							
		Physical Collocation, Cable Records, VG/DS0 Cable, per each 100 pair			CLO	PE1CO		4.84		5.93							
		Physical Collocation, Cable Records, DS1, per T1 TIE			CLO	PE1C1		2.27		2.78							
		Physical Collocation, Cable Records, DS3, per T3 TIE			CLO	PE1C3		7.92		9.72							
		Physical Collocation - Cable Records, Fiber Cable, per cable record (maximum 99 records)			CLO	PE1CB		84.98		77.58							
		Physical Collocation - Security Escort for Basic Time - normally scheduled work, per half hour			CLO	PE1BT		17.02	10.79								
		Physical Collocation - Security Escort for Overtime - outside of normally scheduled working hours on a scheduled work day, per half hour			CLO	PE1OT		22.17	13.94								
		Physical Collocation - Security Escort for Premium Time - outside of scheduled work day, per half hour			CLO	PE1PT		27.32	17.08								
		Physical Collocation - Virtual to Physical Collocation Relocation, per Voice Grade Circuit			CLO	PE1BV		33.00									
		Physical Collocation - Virtual to Physical Collocation Relocation, per DSO Circuit			CLO	PE1BO		33.00									
		Physical Collocation - Virtual to Physical Collocation Relocation, per DS1 Circuit			CLO	PE1B1		52.00									

COLLOCATION - Mississippi														Attachment: 4		Exhibit: B	
CATEGORY		RATE ELEMENTS	Interim	Zone	BCS	USOC	RATES ($)					Svc Order Submitted Elec per LSR	Svc Order Submitted Manually per LSR	Incremental Charge - Manual Svc Order vs. Electronic-1st	Incremental Charge - Manual Svc Order vs. Electronic-Add'l	Incremental Charge - Manual Svc Order vs. Electronic-Disc 1st	Incremental Charge - Manual Svc Order vs. Electronic-Disc Add'l
							Rec	Nonrecurring		Nonrecurring Disconnect		OSS Rates ($)					
								First	Add'l	First	Add'l	SOMEC	SOMAN	SOMAN	SOMAN	SOMAN	SOMAN
		Physical Collocation - Virtual to Physical Collocation Relocation, per DS3 Circuit			CLO	PE1B3		52.00									
		Physical Collocation - Virtual to Physical Collocation In-Place, Per Voice Grade Circuit			CLO	PE1BR		23.00									
		Physical Collocation Virtual to Physical Collocation In-Place, Per DSO Circuit			CLO	PE1BP		23.00									
		Physical Collocation - Virtual to Physical Collocation In-Place, Per DS1 Circuit			CLO	PE1BS		33.00									
		Physical Collocation - Virtual to Physical Collocation In-Place, per DS3 Circuit			CLO	PE1BE		37.00									
		Physical Collocation - Virtual to Physical Collocation In-Place/Relocation, space cable facilities assigned to Collocation Space, per 700 cable pairs or fraction thereof			CLO	PE1B7		592.00									
		Physical Collocation - Co-Carrier Cross Connects/Direct Connect - Fiber Cable Support Structure, per linear ft.			CLO	PE1ES	0.001										
		Physical Collocation - Co-Carrier Cross Connect/Direct Connect - Copper/Coax Cable Support Structure, per lin. ft.			CLO	PE1DS	0.0015										
		Physical Collocation - Co-Carrier Cross Connects/Direct Connect, Application Fee, per application			CLO	PE1DT		583.13									
		Physical Collocation - Copper Entrance Cable per Cable (CO manhole to vault splice)			CLO	PE1EA		1,265.629	42.641								
		Physical Collocation - Copper Entrance Cable Installation, per 100 Pairs			CLO	PE1EB		18.069									
		Physical Collocation - Fiber Entrance Cable per Cable (CO manhole to vault splice)			CLO	PE1EC		1,070.484	42.641								
		Physical Collocation - Fiber Entrance Cable Installation, per Fiber			CLO	PE1ED		7.228									
		Physical Collocation - Application Cost, Simple Augment			CLO	PE1KS		597.34		1.22							
		Physical Collocation - Application Cost, Minor Augment			CLO	PE1KM		837.57		1.22							
		Physical Collocation - Application Cost, Intermediate Augment			CLO	PE1K1		1,063.00		1.22							
		Physical Collocation - Co-Carrier Cross Connect/Direct Connect - Fiber Cable Support Structure, per cable	I		CLO	PE1DU		534.65									
		Physical Collocation - Co-Carrier Cross Connect/Direct Connect - Copper/Coax Cable Support Structure, per cable	I		CLO	PE1DV		534.65									
ADJACENT COLLOCATION																	
		Adjacent Collocation - Space Charge per Sq. Ft.			CLOAC	PE1JA	0.0678										
		Adjacent Collocation - Electrical Facility Charge per Linear Ft.			CLOAC	PE1JC	4.68										
		Adjacent Collocation - 2-Wire Cross-Connects			UEA,UHL,UDL,UCL	PE1P2	0.0223	12.37	11.87	6.04	5.45						
		Adjacent Collocation - 4-Wire Cross-Connects			UEA,UHL,UDL,UCL	PE1P4	0.0446	12.47	11.94	6.59	5.91						
		Adjacent Collocation - DS1 Cross-Connects			UEA,UHL,UDL,UCL	PE1P1	1.05	22.16	16.02	6.60	5.97						
		Adjacent Collocation - DS3 Cross-Connects			UEA,UHL,UDL,UCL	PE1P3	14.27	21.01	15.29	7.61	6.10						
		Adjacent Collocation - 2-Fiber Cross-Connect			CLOAC	PE1F2	2.42	21.01	15.29	7.61	6.10						
		Adjacent Collocation - 4-Fiber Cross-Connect			CLOAC	PE1F4	4.62	25.70	19.97	10.01	8.50						
		Adjacent Collocation - Application Fee			CLOAC	PE1JB		1,585.83									
		Adjacent Collocation - 120V, Single Phase Standby Power Rate per AC Breaker Amp			CLOAC	PE1FB	5.29										
		Adjacent Collocation - 240V, Single Phase Standby Power Rate per AC Breaker Amp			CLOAC	PE1FD	10.58										
		Adjacent Collocation - 120V, Three Phase Standby Power Rate per AC Breaker Amp			CLOAC	PE1FE	15.87										
		Adjacent Collocation - 277V, Three Phase Standby Power Rate per AC Breaker Amp			CLOAC	PE1FG	36.65										
PHYSICAL COLLOCATION IN THE REMOTE SITE																	
		Physical Collocation in the Remote Site - Application Fee			CLORS	PE1RA		309.48		168.63							
		Cabinet Space in the Remote Site per Bay/ Rack			CLORS	PE1RB	210.05										
		Physical Collocation in the Remote Site - Security Access - Key			CLORS	PE1RD		13.17									
		Physical Collocation in the Remote Site - Space Availability Report per Premises Requested			CLORS	PE1SR		116.54									

COLLOCATION - Mississippi														Attachment: 4		Exhibit: B	
CATEGORY		RATE ELEMENTS	Interim	Zone	BCS	USOC	RATES ($)					Svc Order Submitted Elec per LSR	Svc Order Submitted Manually per LSR	Incremental Charge - Manual Svc Order vs. Electronic-1st	Incremental Charge - Manual Svc Order vs. Electronic-Add'l	Incremental Charge - Manual Svc Order vs. Electronic-Disc 1st	Incremental Charge - Manual Svc Order vs. Electronic-Disc Add'l
							Rec	Nonrecurring		Nonrecurring Disconnect		OSS Rates ($)					
								First	Add'l	First	Add'l	SOMEC	SOMAN	SOMAN	SOMAN	SOMAN	SOMAN
		Physical Collocation in the Remote Site - Remote Site CLLI Code Request, per CLLI Code Requested			CLORS	PE1RE		37.77									
		Remote Site DLEC Data (BRSDD), per Compact Disk, per CO			CLORS	PE1RR		233.14									
		Physical Collocation - Security Escort for Basic Time - normally scheduled work, per half hour			CLORS	PE1BT		17.02	10.79								
		Physical Collocation - Security Escort for Overtime - outside of normally scheduled working hours on a scheduled work day, per half hour			CLORS	PE1OT		22.17	13.94								
		Physical Collocation - Security Escort for Premium Time - outside of scheduled work day, per half hour			CLORS	PE1PT		27.32	17.08								
PHYSICAL COLLOCATION IN THE REMOTE SITE - ADJACENT																	
		Remote Site-Adjacent Collocation - AC Power, per breaker amp			CLORS	PE1RS	6.27										
		Remote Site-Adjacent Collocation - Real Estate, per square foot			CLORS	PE1RT	0.134										
		Remote Site-Adjacent Collocation-Application Fee			CLORS	PE1RU		755.62	755.62								
	NOTE: If Security Escort and/or Add'l Engineering Fees become necessary for remote site collocation, the Parties will negotiate appropriate rates.																
VIRTUAL COLLOCATION																	
		Virtual Collocation - Application Fee			AMTFS	EAF		1,212.25		0.51							
		Virtual Collocation Administrative Only - Application Fee	I		AMTFS	VE1AF		740.76									
		Virtual Collocation - Cable Installation Cost, per cable			AMTFS	ESPCX		926.27		22.62							
		Virtual Collocation - Floor Space, per sq. ft.			AMTFS	ESPVX	5.74										
		Virtual Collocation - Power, per fused amp			AMTFS	ESPAX	7.33										
		Virtual Collocation - Cable Support Structure, per entrance cable			AMTFS	ESPSX	15.24										
		Virtual Collocation - 2-wire Cross Connects (loop)			UEANL,UEA,UDN,UDC,UAL,UHL,UCL,UEQ, UNCVX, UNCDX, UNCNX	UEAC2	0.0268	12.37	11.87	6.04	5.45						
		Virtual Collocation - 4-wire Cross Connects (loop)			UEA,UHL,UCL,UDL, UAL, UDN, UNCVX, UNCDX	UEAC4	0.0536	12.47	11.94	6.59	5.91						
		Virtual Collocation - 2-Fiber Cross Connects			UDL12, UDLO3, U1T48, U1T12, U1T03, ULDO3, ULD12, ULD48, UDF	CNC2F	2.91	21.01	15.29	7.61	6.10						
		Virtual Collocation - 4-Fiber Cross Connects			UDL12, UDLO3, U1T48, U1T12, U1T03, ULDO3, ULD12, ULD48, UDF	CNC4F	5.82	25.70	19.97	10.01	8.50						
		Virtual Collocation - Special Access & UNE, cross-connect per DS1			USL,ULC, ULR, UXTD1, UNC1X, ULDD1, U1TD1, USLEL, UNLD1, UEPEX, UEPDX	CNC1X	1.14	22.16	16.02	6.60	5.97						
		Virtual collocation - Special Access & UNE, cross-connect per DS3			USL,UE3, U1TD3, UXTS1, UXTD3, UNC3X, UNCSX, ULDD3, U1TS1, ULDS1, UDLSX, UNLD3	CND3X	14.49	21.01	15.29	7.61	6.10						
		Virtual Collocation - Co-Carrier Cross Connects - Fiber Cable Support Structure, per linear foot			AMTFS	VE1CB	0.0025										
		Virtual Collocation - Co-Carrier Cross Connects - Copper/Coax Cable Support Structure, per linear ft			AMTFS	VE1CD	0.0037										
		Virtual Collocation - Co-Carrier Cross Connects - Fiber Cable Support Structure,per cable			AMTFS	VE1CC		534.65									

COLLOCATION - Mississippi														Attachment: 4		Exhibit: B	
CATEGORY		RATE ELEMENTS	Interim	Zone	BCS	USOC	RATES ($)					Svc Order Submitted Elec per LSR	Svc Order Submitted Manually per LSR	Incremental Charge - Manual Svc Order vs. Electronic-1st	Incremental Charge - Manual Svc Order vs. Electronic-Add'l	Incremental Charge - Manual Svc Order vs. Electronic-Disc 1st	Incremental Charge - Manual Svc Order vs. Electronic-Disc Add'l
							Rec	Nonrecurring		Nonrecurring Disconnect		OSS Rates ($)					
								First	Add'l	First	Add'l	SOMEC	SOMAN	SOMAN	SOMAN	SOMAN	SOMAN
		Virtual Collocation - Co-Carrier Cross Connects - Copper/Coax Cable Support Structure, per cable			AMTFS	VE1CE		534.65									
		Virtual Collocation Cable Records - per request			AMTFS	VE1BA		763.69	490.94	133.77							
		Virtual Collocation Cable Records - VG/DS0 Cable, per cable record			AMTFS	VE1BB		328.81		190.22							
		Virtual Collocation Cable Records - VG/DS0 Cable, per each 100 pair			AMTFS	VE1BC		4.84		5.93							
		Virtual Collocation Cable Records - DS1, per T1TIE			AMTFS	VE1BD		2.27		2.78							
		Virtual Collocation Cable Records - DS3, per T3TIE			AMTFS	VE1BE		7.92		9.72							
		Virtual Collocation Cable Records - Fiber Cable, per 99 fiber records			AMTFS	VE1BF		84.98		77.58							
		Virtual collocation - Security Escort - Basic, per half hour			AMTFS	SPTBX		17.02	10.79								
		Virtual collocation - Security Escort - Overtime, per half hour			AMTFS	SPTOX		22.17	13.94								
		Virtual collocation - Security Escort - Premium, per half hour			AMTFS	SPTPX		27.32	17.08								
		Virtual collocation - Maintenance in CO - Basic, per half hour			AMTFS	CTRLX		28.09	10.79								
		Virtual collocation - Maintenance in CO - Overtime, per half hour			AMTFS	SPTOM		36.69	13.94								
		Virtual collocation - Maintenance in CO - Premium per half hour			AMTFS	SPTPM		45.28	17.08								
		Virtual Collocation - Request Resend of CFA Information, per CLLI			AMTFS	VE1QR		77.41									
VIRTUAL COLLOCATION																	
		Virtual Collocation - 2-wire Cross Connect, Exchange Port 2-Wire Analog - Res			UEPSR	VE1R2	0.0268	12.37	11.87	6.04	5.45						
		Virtual Collocation 2-Wire Cross Connect, Exchange Port 2-Wire Line Side PBX Trunk - Bus			UEPSP	VE1R2	0.0268	12.37	11.87	6.04	5.45						
		Virtual Collocation 2-Wire Cross Connect, Exchange Port 2-Wire Voice Grade PBX Trunk - Res			UEPSE	VE1R2	0.0268	12.37	11.87	6.04	5.45						
		Virtual Collocation 2-Wire Cross Connect, Exchange Port 2-Wire Analog Bus			UEPSB	VE1R2	0.0268	12.37	11.87	6.04	5.45						
		Virtual Collocation 2-Wire Cross Connect, Exchnage Port 2-Wire ISDN			UEPSX	VE1R2	0.0268	12.37	11.87	6.04	5.45						
		Virtual Collocation 2-Wire Cross Connect, Exchange Port 2-Wire ISDN			UEPTX	VE1R2	0.0268	12.37	11.87	6.04	5.45						
		Virtual Collocation 4-Wire Cross Connect, Exchange Port 4-Wire ISDN DS1			UEPEX	VE1R4	0.0536	12.47	11.94	6.59	5.91						
	Note: Rates displaying an "R" in Interim column are interim and subject to rate true-up as set forth in General Terms and Conditions.																

COLLOCATION - North Carolina

CATEGORY		RATE ELEMENTS	Interim	Zone	BCS	USOC	RATES ($)					Svc Order Submitted Elec per LSR	Svc Order Submitted Manually per LSR	Attachment: 4		Exhibit: B	
														Incremental Charge - Manual Svc Order vs. Electronic-1st	Incremental Charge - Manual Svc Order vs. Electronic-Add'l	Incremental Charge - Manual Svc Order vs. Electronic-Disc 1st	Incremental Charge - Manual Svc Order vs. Electronic-Disc Add'l
							Rec	Nonrecurring		Nonrecurring Disconnect		OSS Rates ($)					
								First	Add'l	First	Add'l	SOMEC	SOMAN	SOMAN	SOMAN	SOMAN	SOMAN
PHYSICAL COLLOCATION																	
		Physical Collocation 2-Wire Cross Connect, Exchange Port 2-Wire Analog - Res			UEPSR	PE1R2	0.32	41.78	39.23					26.94	12.76		
		Physical Collocation 2-Wire Cross Connect, Exchange Port 2-Wire Line Side PBX Trunk - Bus			UEPSP	PE1R2	0.32	41.78	39.23					26.94	12.76		
		Physical Collocation 2-Wire Cross Connect, Exchange Port 2-Wire Voice Grade PBX Trunk - Res			UEPSE	PE1R2	0.32	41.78	39.23					26.94	12.76		
		Physical Collocation 2-Wire Cross Connect, Exchange Port 2-Wire Analog - Bus			UEPSB	PE1R2	0.32	41.78	39.23					26.94	12.76		
		Physical Collocation 2-Wire Cross Connect, Exchange Port 2-Wire ISDN			UEPSX	PE1R2	0.32	41.78	39.23					26.94	12.76		
		Physical Collocation 2-Wire Cross Connect, Exchange Port 2-Wire ISDN			UEPTX	PE1R2	0.32	41.78	39.23					26.94	12.76		
		Physical Collocation 4-Wire Cross Connect, Exchange Port 4-Wire ISDN DS1			UEPEX	PE1R4	0.64	41.91	39.25					26.94	12.76		
PHYSICAL COLLOCATION																	
		Physical Collocation - Initial Application Fee	I		CLO	PE1BA		2,322.00									
		Physical Collocation - Subsequent Application Fee			CLO	PE1CA		2,311.00									
		Physical Collocation Administrative Only - Application Fee			CLO	PE1BL		741.44									
		Physical Collocation - Space Preparation - Firm Order Processing			CLO	PE1SJ		1,196.00									
		Physical Collocation - Space Preparation - C.O. Modification per square ft.	I		CLO	PE1SK	2.42										
		Physical Collocation - Space Preparation, Common Systems Modifications-Cageless, per square foot	I		CLO	PE1SL	2.88										
		Physical Collocation - Space Preparation - Common Systems Modifications-Caged, per cage	I		CLO	PE1SM	97.98										
		Space Preparation Fees - Power Per Nominal -48V Dc Amp	I		CLO	PE1FH	5.76										
		Physical Collocation - Cable Installation, Pricing, non-recurring charge, per Entrance Cable	I		CLO	PE1BD		1,701.00									
		Physical Collocation - Floor Space, per sq feet	I		CLO	PE1PJ	2.30										
		Physical Collocation - Cable Support Structure, per Entrance Cable	I		CLO	PE1PM	20.57										
		Physical Collocation - Power, -48V DC Power - per Fused Amp	I		CLO	PE1PL	7.65										
		Physical Collocation - Power Reconfiguration Only, Application Fee	I		CLO	PE1PR		399.13									
		Physical Collocation - Power, 120V AC Power, Single Phase, per Breaker Amp	I		CLO	PE1FB	5.50										
		Physical Collocation - Power, 240V AC Power, Single Phase, per Breaker Amp	I		CLO	PE1FD	11.01										
		Physical Collocation - Power, 120V AC Power, Three Phase, per Breaker Amp	I		CLO	PE1FE	16.51										
		Physical Collocation - Power, 277V AC Power, Three Phase, per Breaker Amp	I		CLO	PE1FG	38.12										
		Physical Collocation - 2-wire cross-connect, loop, provisioning	I		UEANL,UEQ, UNLDX, UNCNX, UEA, UCL, UAL, UHL, UDC, UDN, UNCVX	PE1P2	0.0309	33.53	31.65								
		Physical Collocation - 4-wire cross-connect, loop, provisioning	I		UEA, UHL, UNCVX, UNCDX, UCL, UDL	PE1P4	0.0618	33.67	31.70								
		Physical Collocation -DS1 Cross-Connect for Physical Collocation, provisioning	I		WDS1L,WDS1S, UXTD1, ULDD1, USLEL, UNLD1, UEPEX, UEPDX, USL, ULC, U1TD1, UNC1X	PE1P1	1.38	52.87	39.86								

COLLOCATION - North Carolina														Attachment: 4		Exhibit: B	
CATEGORY		RATE ELEMENTS	Interim	Zone	BCS	USOC	RATES ($)					Svc Order Submitted Elec per LSR	Svc Order Submitted Manually per LSR	Incremental Charge - Manual Svc Order vs. Electronic-1st	Incremental Charge - Manual Svc Order vs. Electronic-Add'l	Incremental Charge - Manual Svc Order vs. Electronic-Disc 1st	Incremental Charge - Manual Svc Order vs. Electronic-Disc Add'l
							Rec	Nonrecurring		Nonrecurring Disconnect		OSS Rates ($)					
								First	Add'l	First	Add'l	SOMEC	SOMAN	SOMAN	SOMAN	SOMAN	SOMAN
		Physical Collocation - DS3 Cross-Connect, provisioning	I		UE3,U1TD3, UXTD3, UXTS1, UNC3X, UNCSX, ULDD3, U1TS1,ULDS1, UNLD3	PE1P3	17.62	51.97	38.59								
		Physical Collocation - 2-Fiber Cross-Connect	I		CLO, ULDO3, ULD12, ULD48, U1TO3, U1T12, U1T48, UDLO3, UDL12, UDF	PE1F2	3.50	51.97	38.59								
		Physical Collocation - 4-Fiber Cross-Connect	I		ULDO3, ULD12, ULD48, U1TO3, U1T12, U1T48, UDLO3, UDL12, UDF	PE1F4	6.20	64.53	51.15								
		Physical Collocation - Space enclosure, welded wire, first 100 square feet	I		CLO	PE1BW		559.81									
		Physical Collocation - Space enclosure, welded wire, each additional 50 square feet	I		CLO	PE1CW		25.37									
		Physical Collocation - Security Access System - Security System per Central Office, per Sq. Ft.			CLO	PE1AY	0.0135										
		Physical Collocation -Security Access System - New Card Activation, per Card Activation (First), per State	I		CLO	PE1A1	0.062	15.00									
		Physical Collocation-Security Access System-Administrative Change, existing Access Card, per Request, per State, per Card	I		CLO	PE1AA		15.51									
		Physical Collocation - Security Access System - Replace Lost or Stolen Card, per Card			CLO	PE1AR		15.00									
		Physical Collocation - Security Access - Initial Key, per Key			CLO	PE1AK		15.00									
		Physical Collocation - Security Access - Key, Replace Lost or Stolen Key, per Key			CLO	PE1AL		15.00									
		Physical Collocation - Space Availability Report, per Central Office Requested	I		CLO	PE1SR		2,140.00	2,140.00								
		Physical Collocation - CFA Information Resend Request, per premises, per request			CLO	PE1C9		77.48									
		Physical Collocation - Cable Records, per request			CLO	PE1CR		1,707.00									
		Physical Collocation, Cable Records, VG/DS0 Cable, per cable record (maximum 3600 records)			CLO	PE1CD		923.08									
		Physical Collocation, Cable Records, VG/DS0 Cable, per each 100 pair			CLO	PE1CO		18.02									
		Physical Collocation, Cable Records, DS1, per T1 TIE			CLO	PE1C1		8.43									
		Physical Collocation, Cable Records, DS3, per T3 TIE			CLO	PE1C3		29.51									
		Physical Collocation - Cable Records, Fiber Cable, per cable record (maximum 99 records)			CLO	PE1CB		278.82									
		Physical Collocation - Security Escort for Basic Time - normally scheduled work, per half hour			CLO	PE1BT		33.68	21.34								
		Physical Collocation - Security Escort for Overtime - outside of normally scheduled working hours on a scheduled work day, per half hour			CLO	PE1OT		43.87	27.57								
		Physical Collocation - Security Escort for Premium Time - outside of scheduled work day, per half hour			CLO	PE1PT		54.06	33.80								
		Physical Collocation - Virtual to Physical Collocation Relocation, per Voice Grade Circuit			CLO	PE1BV		33.00									
		Physical Collocation - Virtual to Physical Collocation Relocation, per DSO Circuit			CLO	PE1BO		33.00									
		Physical Collocation - Virtual to Physical Collocation Relocation, per DS1 Circuit			CLO	PE1B1		52.00									

COLLOCATION - North Carolina														Attachment: 4		Exhibit: B	
CATEGORY		RATE ELEMENTS	Interim	Zone	BCS	USOC	RATES ($)					Svc Order Submitted Elec per LSR	Svc Order Submitted Manually per LSR	Incremental Charge - Manual Svc Order vs. Electronic-1st	Incremental Charge - Manual Svc Order vs. Electronic-Add'l	Incremental Charge - Manual Svc Order vs. Electronic-Disc 1st	Incremental Charge - Manual Svc Order vs. Electronic-Disc Add'l
							Rec	Nonrecurring		Nonrecurring Disconnect		OSS Rates ($)					
								First	Add'l	First	Add'l	SOMEC	SOMAN	SOMAN	SOMAN	SOMAN	SOMAN
		Physical Collocation - Virtual to Physical Collocation Relocation, per DS3 Circuit			CLO	PE1B3		52.00									
		Physical Collocation - Virtual to Physical Collocation In-Place, Per Voice Grade Circuit			CLO	PE1BR		23.00									
		Physical Collocation Virtual to Physical Collocation In-Place, Per DSO Circuit			CLO	PE1BP		23.00									
		Physical Collocation - Virtual to Physical Collocation In-Place, Per DS1 Circuit			CLO	PE1BS		33.00									
		Physical Collocation - Virtual to Physical Collocation In-Place, per DS3 Circuit			CLO	PE1BE		37.00									
		Physical Collocation - Virtual to Physical Collocation In-Place/Relocation, space cable facilities assigned to Collocation Space, per 700 cable pairs or fraction thereof			CLO	PE1B7		592.00									
		Physical Collocation - Co-Carrier Cross Connects/Direct Connect - Fiber Cable Support Structure, per linear ft.			CLO	PE1ES	0.0028										
		Physical Collocation - Co-Carrier Cross Connect/Direct Connect - Copper/Coax Cable Support Structure, per lin. ft.			CLO	PE1DS	0.0041										
		Physical Collocation - Co-Carrier Cross Connects/Direct Connect, Application Fee, per application			CLO	PE1DT		583.66									
		Physical Collocation - Copper Entrance Cable per Cable (CO manhole to vault splice)			CLO	PE1EA		1,167.175	42.68								
		Physical Collocation - Copper Entrance Cable Installation, per 100 Pairs			CLO	PE1EB		18.086									
		Physical Collocation - Fiber Entrance Cable per Cable (CO manhole to vault splice)			CLO	PE1EC		971.852	42.68								
		Physical Collocation - Fiber Entrance Cable Installation, per Fiber			CLO	PE1ED		7.234									
		Physical Collocation - Application Cost, Simple Augment			CLO	PE1KS		575.93		1.16							
		Physical Collocation - Application Cost, Minor Augment			CLO	PE1KM		806.66		1.16							
		Physical Collocation - Application Cost, Intermediate Augment			CLO	PE1K1		1,023.00		1.16							
		Physical Collocation - Co-Carrier Cross Connect/Direct Connect - Fiber Cable Support Structure, per cable	I		CLO	PE1DU		532.72									
		Physical Collocation - Co-Carrier Cross Connect/Direct Connect - Copper/Coax Cable Support Structure, per cable	I		CLO	PE1DV		532.72									
ADJACENT COLLOCATION																	
		Adjacent Collocation - Space Charge per Sq. Ft.			CLOAC	PE1JA	0.1555										
		Adjacent Collocation - Electrical Facility Charge per Linear Ft.			CLOAC	PE1JC	5.78										
		Adjacent Collocation - 2-Wire Cross-Connects			UEA,UHL,UDL,UCL	PE1P2	0.0239	33.53	31.65								
		Adjacent Collocation - 4-Wire Cross-Connects			UEA,UHL,UDL,UCL	PE1P4	0.0477	33.67	31.70								
		Adjacent Collocation - DS1 Cross-Connects			UEA,UHL,UDL,UCL	PE1P1	1.28	52.87	39.86								
		Adjacent Collocation - DS3 Cross-Connects			UEA,UHL,UDL,UCL	PE1P3	17.35	51.97	38.59								
		Adjacent Collocation - 2-Fiber Cross-Connect			CLOAC	PE1F2	2.94	51.97	38.59								
		Adjacent Collocation - 4-Fiber Cross-Connect			CLOAC	PE1F4	5.62	64.53	51.15								
		Adjacent Collocation - Application Fee			CLOAC	PE1JB		3,139.00									
		Adjacent Collocation - 120V, Single Phase Standby Power Rate per AC Breaker Amp			CLOAC	PE1FB	5.50										
		Adjacent Collocation - 240V, Single Phase Standby Power Rate per AC Breaker Amp			CLOAC	PE1FD	11.01										
		Adjacent Collocation - 120V, Three Phase Standby Power Rate per AC Breaker Amp			CLOAC	PE1FE	16.51										
		Adjacent Collocation - 277V, Three Phase Standby Power Rate per AC Breaker Amp			CLOAC	PE1FG	38.12										
PHYSICAL COLLOCATION IN THE REMOTE SITE																	
		Physical Collocation in the Remote Site - Application Fee			CLORS	PE1RA		865.34									
		Cabinet Space in the Remote Site per Bay/ Rack			CLORS	PE1RB	254.02										
		Physical Collocation in the Remote Site - Security Access - Key			CLORS	PE1RD		26.06									
		Physical Collocation in the Remote Site - Space Availability Report per Premises Requested			CLORS	PE1SR		230.60									

COLLOCATION - North Carolina														Attachment: 4		Exhibit: B	
CATEGORY		RATE ELEMENTS	Interim	Zone	BCS	USOC	RATES ($)					Svc Order Submitted Elec per LSR	Svc Order Submitted Manually per LSR	Incremental Charge - Manual Svc Order vs. Electronic-1st	Incremental Charge - Manual Svc Order vs. Electronic-Add'l	Incremental Charge - Manual Svc Order vs. Electronic-Disc 1st	Incremental Charge - Manual Svc Order vs. Electronic-Disc Add'l
							Rec	Nonrecurring		Nonrecurring Disconnect		OSS Rates ($)					
								First	Add'l	First	Add'l	SOMEC	SOMAN	SOMAN	SOMAN	SOMAN	SOMAN
		Physical Collocation in the Remote Site - Remote Site CLLI Code Request, per CLLI Code Requested			CLORS	PE1RE		74.74									
		Remote Site DLEC Data (BRSDD), per Compact Disk, per CO			CLORS	PE1RR		232.94									
		Physical Collocation - Security Escort for Basic Time - normally scheduled work, per half hour			CLORS	PE1BT		33.68	21.34								
		Physical Collocation - Security Escort for Overtime - outside of normally scheduled working hours on a scheduled work day, per half hour			CLORS	PE1OT		43.87	27.57								
		Physical Collocation - Security Escort for Premium Time - outside of scheduled work day, per half hour			CLORS	PE1PT		54.06	33.80								
PHYSICAL COLLOCATION IN THE REMOTE SITE - ADJACENT																	
		Remote Site-Adjacent Collocation - AC Power, per breaker amp			CLORS	PE1RS	6.27										
		Remote Site-Adjacent Collocation - Real Estate, per square foot			CLORS	PE1RT	0.134										
		Remote Site-Adjacent Collocation-Application Fee			CLORS	PE1RU		755.62	755.62								
	NOTE: If Security Escort and/or Add'l Engineering Fees become necessary for remote site collocation, the Parties will negotiate appropriate rates.																
VIRTUAL COLLOCATION																	
		Virtual Collocation - Application Fee			AMTFS	EAF		1,208.00		1.16				26.94	12.76		
		Virtual Collocation Administrative Only - Application Fee	I		AMTFS	VE1AF		741.44									
		Virtual Collocation - Cable Installation Cost, per cable			AMTFS	ESPCX		2,750.00						26.94	12.76		
		Virtual Collocation - Floor Space, per sq. ft.			AMTFS	ESPVX	3.20										
		Virtual Collocation - Power, per fused amp			AMTFS	ESPAX	3.48										
		Virtual Collocation - Cable Support Structure, per entrance cable			AMTFS	ESPSX	12.60										
		Virtual Collocation - 2-wire Cross Connects (loop)			UEANL,UEA,UDN,UDC,UAL,UHL,UCL,UEQ, UNCVX, UNCDX, UNCNX	UEAC2	0.0208							26.94	12.76		
		Virtual Collocation - 4-wire Cross Connects (loop)			UEA,UHL,UCL,UDL, UAL, UDN, UNCVX, UNCDX	UEAC4	0.0417							26.94	12.76		
		Virtual Collocation - 2-Fiber Cross Connects			UDL12, UDLO3, U1T48, U1T12, U1T03, ULDO3, ULD12, ULD48, UDF	CNC2F	1.86							26.94	12.76		
		Virtual Collocation - 4-Fiber Cross Connects			UDL12, UDLO3, U1T48, U1T12, U1T03, ULDO3, ULD12, ULD48, UDF	CNC4F	3.73							26.94	12.76		
		Virtual collocation - Special Access & UNE, cross-connect per DS1			USL,ULC, ULR, UXTD1, UNC1X, ULDD1, U1TD1, USLEL, UNLD1, UEPEX, UEPDX	CNC1X	0.3978							26.94	12.76		
		Virtual collocation - Special Access & UNE, cross-connect per DS3			USL,UE3, U1TD3, UXTS1, UXTD3, UNC3X, UNCSX, ULDD3, U1TS1, ULDS1, UDLSX, UNLD3	CND3X	4.18							26.94	12.76		
		Virtual Collocation - Co-Carrier Cross Connects - Fiber Cable Support Structure, per linear foot			AMTFS	VE1CB	0.0028										
		Virtual Collocation - Co-Carrier Cross Connects - Copper/Coax Cable Support Structure, per linear ft			AMTFS	VE1CD	0.0041										
		Virtual Collocation - Co-Carrier Cross Connects - Fiber Cable Support Structure,per cable			AMTFS	VE1CC		532.72						26.94	12.76		

COLLOCATION - North Carolina														Attachment: 4		Exhibit: B	
CATEGORY		RATE ELEMENTS	Interim	Zone	BCS	USOC	RATES ($)					Svc Order Submitted Elec per LSR	Svc Order Submitted Manually per LSR	Incremental Charge - Manual Svc Order vs. Electronic-1st	Incremental Charge - Manual Svc Order vs. Electronic-Add'l	Incremental Charge - Manual Svc Order vs. Electronic-Disc 1st	Incremental Charge - Manual Svc Order vs. Electronic-Disc Add'l
							Rec	Nonrecurring		Nonrecurring Disconnect		OSS Rates ($)					
								First	Add'l	First	Add'l	SOMEC	SOMAN	SOMAN	SOMAN	SOMAN	SOMAN
		Virtual Collocation - Co-Carrier Cross Connects - Copper/Coax Cable Support Structure, per cable			AMTFS	VE1CE		532.72						26.94	12.76		
		Virtual Collocation Cable Records - per request			AMTFS	VE1BA		1474.00 I	947.42 S	247.64 I	247.64 S						
		Virtual Collocation Cable Records - VG/DS0 Cable, per cable record			AMTFS	VE1BB		629.42 I	629.42 S	350.10 I	350.10 S						
		Virtual Collocation Cable Records - VG/DS0 Cable, per each 100 pair			AMTFS	VE1BC		8.87 I	8.87 S	10.43 I	10.43 S						
		Virtual Collocation Cable Records - DS1, per T1TIE			AMTFS	VE1BD		4.40 I	4.40 S	5.17 I	5.17 S						
		Virtual Collocation Cable Records - DS3, per T3TIE			AMTFS	VE1BE		15.38 I	15.38 S	18.09 I	18.09 S						
		Virtual Collocation Cable Records - Fiber Cable, per 99 fiber records			AMTFS	VE1BF		165.38 I	165.38 S	144.87 I	144.87 S						
		Virtual collocation - Security Escort - Basic, per half hour			AMTFS	SPTBX		41.00	25.00					26.94	12.76		
		Virtual collocation - Security Escort - Overtime, per half hour			AMTFS	SPTOX		48.00	30.00					26.94	12.76		
		Virtual collocation - Security Escort - Premium, per half hour			AMTFS	SPTPX		55.00	35.00					26.94	12.76		
		Virtual collocation - Maintenance in CO - Basic, per half hour			AMTFS	CTRLX		52.59	21.45					26.94	12.76		
		Virtual collocation - Maintenance in CO - Overtime, per half hour			AMTFS	SPTOM		70.24	28.11					26.94	12.76		
		Virtual collocation - Maintenance in CO - Premium per half hour			AMTFS	SPTPM		87.88	34.77					26.94	12.76		
		Virtual Collocation - Request Resend of CFA Information, per CLLI			AMTFS	VE1QR		77.48									
VIRTUAL COLLOCATION																	
		Virtual Collocation - 2-wire Cross Connect, Exchange Port 2-Wire Analog - Res			UEPSR	VE1R2	0.09	41.78	39.23					26.94	12.76		
		Virtual Collocation 2-Wire Cross Connect, Exchange Port 2-Wire Line Side PBX Trunk - Bus			UEPSP	VE1R2	0.09	41.78	39.23					26.94	12.76		
		Virtual Collocation 2-Wire Cross Connect, Exchange Port 2-Wire Voice Grade PBX Trunk - Res			UEPSE	VE1R2	0.09	41.78	39.23					26.94	12.76		
		Virtual Collocation 2-Wire Cross Connect, Exchange Port 2-Wire Analog Bus			UEPSB	VE1R2	0.09	41.78	39.23					26.94	12.76		
		Virtual Collocation 2-Wire Cross Connect, Exchnage Port 2-Wire ISDN			UEPSX	VE1R2	0.09	41.78	39.23					26.94	12.76		
		Virtual Collocation 2-Wire Cross Connect, Exchange Port 2-Wire ISDN			UEPTX	VE1R2	0.09	41.78	39.23					26.94	12.76		
		Virtual Collocation 4-Wire Cross Connect, Exchange Port 4-Wire ISDN DS1			UEPEX	VE1R4	0.18	41.91	39.25					26.94	12.76		
	Note: Rates displaying an "R" in Interim column are interim and subject to rate true-up as set forth in General Terms and Conditions.																

COLLOCATION - South Carolina														Attachment: 4		Exhibit: B	
CATEGORY		RATE ELEMENTS	Interim	Zone	BCS	USOC	RATES ($)					Svc Order Submitted Elec per LSR	Svc Order Submitted Manually per LSR	Incremental Charge - Manual Svc Order vs. Electronic-1st	Incremental Charge - Manual Svc Order vs. Electronic-Add'l	Incremental Charge - Manual Svc Order vs. Electronic-Disc 1st	Incremental Charge - Manual Svc Order vs. Electronic-Disc Add'l
							Rec	Nonrecurring		Nonrecurring Disconnect		OSS Rates ($)					
								First	Add'l	First	Add'l	SOMEC	SOMAN	SOMAN	SOMAN	SOMAN	SOMAN
PHYSICAL COLLOCATION																	
		Physical Collocation 2-Wire Cross Connect, Exchange Port 2-Wire Analog - Res			UEPSR	PE1R2	0.0341	12.32	11.83	6.04	5.45						
		Physical Collocation 2-Wire Cross Connect, Exchange Port 2-Wire Line Side PBX Trunk - Bus			UEPSP	PE1R2	0.0341	12.32	11.83	6.04	5.45						
		Physical Collocation 2-Wire Cross Connect, Exchange Port 2-Wire Voice Grade PBX Trunk - Res			UEPSE	PE1R2	0.0341	12.32	11.83	6.04	5.45						
		Physical Collocation 2-Wire Cross Connect, Exchange Port 2-Wire Analog - Bus			UEPSB	PE1R2	0.0341	12.32	11.83	6.04	5.45						
		Physical Collocation 2-Wire Cross Connect, Exchange Port 2-Wire ISDN			UEPSX	PE1R2	0.0341	12.32	11.83	6.04	5.45						
		Physical Collocation 2-Wire Cross Connect, Exchange Port 2-Wire ISDN			UEPTX	PE1R2	0.0341	12.32	11.83	6.04	5.45						
		Physical Collocation 4-Wire Cross Connect, Exchange Port 4-Wire ISDN DS1			UEPEX	PE1R4	1.12	22.08	15.96	6.42	5.80						
PHYSICAL COLLOCATION																	
		Physical Collocation - Initial Application Fee			CLO	PE1BA		1,883.67									
		Physical Collocation - Subsequent Application Fee			CLO	PE1CA		1,570.10									
		Physical Collocation Administrative Only - Application Fee			CLO	PE1BL		743.66									
		Physical Collocation - Space Preparation - Firm Order Processing			CLO	PE1SJ		602.05									
		Physical Collocation - Space Preparation - C.O. Modification per square ft.			CLO	PE1SK	2.75										
		Physical Collocation - Space Preparation, Common Systems Modifications-Cageless, per square foot			CLO	PE1SL	3.24										
		Physical Collocation - Space Preparation - Common Systems Modifications-Caged, per cage			CLO	PE1SM	110.16										
		Physical Collocation - Cable Installation, Pricing, non-recurring charge, per Entrance Cable			CLO	PE1BD		794.22		22.54							
		Physical Collocation - Floor Space, per sq feet			CLO	PE1PJ	3.95										
		Physical Collocation - Cable Support Structure, per Entrance Cable			CLO	PE1PM	21.33										
		Physical Collocation - Power, -48V DC Power - per Fused Amp			CLO	PE1PL	9.19										
		Physical Collocation - Power Reconfiguration Only, Application Fee	I		CLO	PE1PR		400.33									
		Physical Collocation - Power, 120V AC Power, Single Phase, per Breaker Amp			CLO	PE1FB	5.67										
		Physical Collocation - Power, 240V AC Power, Single Phase, per Breaker Amp			CLO	PE1FD	11.36										
		Physical Collocation - Power, 120V AC Power, Three Phase, per Breaker Amp			CLO	PE1FE	17.03										
		Physical Collocation - Power, 277V AC Power, Three Phase, per Breaker Amp			CLO	PE1FG	39.33										
		Physical Collocation - 2-wire cross-connect, loop, provisioning			UEANL,UEQ, UNLDX, UNCNX, UEA, UCL, UAL, UHL, UDC, UDN, UNCVX	PE1P2	0.0341	12.32	11.83	6.04	5.45						
		Physical Collocation - 4-wire cross-connect, loop, provisioning			UEA, UHL, UNCVX, UNCDX, UCL, UDL	PE1P4	0.0682	12.42	11.90	6.40	5.74						
		Physical Collocation -DS1 Cross-Connect for Physical Collocation, provisioning			WDS1L,WDS1S, UXTD1, ULDD1, USLEL, UNLD1, UEPEX, UEPDX, USL, ULC, U1TD1, UNC1X	PE1P1	1.12	22.08	15.96	6.42	5.80						

COLLOCATION - South Carolina														Attachment: 4		Exhibit: B	
CATEGORY		RATE ELEMENTS	Interim	Zone	BCS	USOC	RATES ($)					Svc Order Submitted Elec per LSR	Svc Order Submitted Manually per LSR	Incremental Charge - Manual Svc Order vs. Electronic-1st	Incremental Charge - Manual Svc Order vs. Electronic-Add'l	Incremental Charge - Manual Svc Order vs. Electronic-Disc 1st	Incremental Charge - Manual Svc Order vs. Electronic-Disc Add'l
							Rec	Nonrecurring		Nonrecurring Disconnect		OSS Rates ($)					
								First	Add'l	First	Add'l	SOMEC	SOMAN	SOMAN	SOMAN	SOMAN	SOMAN
		Physical Collocation - DS3 Cross-Connect, provisioning			UE3,U1TD3, UXTD3, UXTS1, UNC3X, UNCSX, ULDD3, U1TS1,ULDS1, UNLD3	PE1P3	14.21	20.94	15.23	7.39	5.93						
		Physical Collocation - 2-Fiber Cross-Connect			CLO, ULDO3, ULD12, ULD48, U1TO3, U1T12, U1T48, UDLO3, UDL12, UDF	PE1F2	2.82	20.94	15.23	7.40	5.93						
		Physical Collocation - 4-Fiber Cross-Connect			ULDO3, ULD12, ULD48, U1TO3, U1T12, U1T48, UDLO3, UDL12, UDF	PE1F4	5.01	25.61	19.90	9.73	8.26						
		Physical Collocation - Space enclosure, welded wire, first 100 square feet			CLO	PE1BW	219.19										
		Physical Collocation - Space enclosure, welded wire, each additional 50 square feet			CLO	PE1CW	21.50										
		Physical Collocation - Security Access System, Security System, per Central Office			CLO	PE1AX	74.72										
		Physical Collocation -Security Access System - New Card Activation, per Card Activation (First), per State			CLO	PE1A1	0.0601	27.85									
		Physical Collocation-Security Access System-Administrative Change, existing Access Card, per Request, per State, per Card			CLO	PE1AA		7.81									
		Physical Collocation - Security Access System - Replace Lost or Stolen Card, per Card			CLO	PE1AR		22.83									
		Physical Collocation - Security Access - Initial Key, per Key			CLO	PE1AK		13.13									
		Physical Collocation - Security Access - Key, Replace Lost or Stolen Key, per Key			CLO	PE1AL		13.13									
		Physical Collocation - Space Availability Report, per Central Office Requested			CLO	PE1SR		1,077.57									
		Physical Collocation - CFA Information Resend Request, per premises, per request			CLO	PE1C9		77.71									
		Physical Collocation - Cable Records, per request			CLO	PE1CR		760.98	489.20	133.29							
		Physical Collocation, Cable Records, VG/DS0 Cable, per cable record (maximum 3600 records)			CLO	PE1CD		327.65		189.54							
		Physical Collocation, Cable Records, VG/DS0 Cable, per each 100 pair			CLO	PE1CO		4.82		5.91							
		Physical Collocation, Cable Records, DS1, per T1 TIE			CLO	PE1C1		2.26		2.77							
		Physical Collocation, Cable Records, DS3, per T3 TIE			CLO	PE1C3		7.90		9.68							
		Physical Collocation - Cable Records, Fiber Cable, per cable record (maximum 99 records)			CLO	PE1CB		84.68		77.30							
		Physical Collocation - Security Escort for Basic Time - normally scheduled work, per half hour			CLO	PE1BT		16.96	10.75								
		Physical Collocation - Security Escort for Overtime - outside of normally scheduled working hours on a scheduled work day, per half hour			CLO	PE1OT		22.10	13.89								
		Physical Collocation - Security Escort for Premium Time - outside of scheduled work day, per half hour			CLO	PE1PT		27.23	17.02								
		Physical Collocation - Virtual to Physical Collocation Relocation, per Voice Grade Circuit			CLO	PE1BV		33.00									
		Physical Collocation - Virtual to Physical Collocation Relocation, per DSO Circuit			CLO	PE1BO		33.00									
		Physical Collocation - Virtual to Physical Collocation Relocation, per DS1 Circuit			CLO	PE1B1		52.00									

COLLOCATION - South Carolina														Attachment: 4		Exhibit: B	
CATEGORY		RATE ELEMENTS	Interim	Zone	BCS	USOC	RATES ($)					Svc Order Submitted Elec per LSR	Svc Order Submitted Manually per LSR	Incremental Charge - Manual Svc Order vs. Electronic-1st	Incremental Charge - Manual Svc Order vs. Electronic-Add'l	Incremental Charge - Manual Svc Order vs. Electronic-Disc 1st	Incremental Charge - Manual Svc Order vs. Electronic-Disc Add'l
							Rec	Nonrecurring		Nonrecurring Disconnect		OSS Rates ($)					
								First	Add'l	First	Add'l	SOMEC	SOMAN	SOMAN	SOMAN	SOMAN	SOMAN
		Physical Collocation - Virtual to Physical Collocation Relocation, per DS3 Circuit			CLO	PE1B3		52.00									
		Physical Collocation - Virtual to Physical Collocation In-Place, Per Voice Grade Circuit			CLO	PE1BR		23.00									
		Physical Collocation Virtual to Physical Collocation In-Place, Per DSO Circuit			CLO	PE1BP		23.00									
		Physical Collocation - Virtual to Physical Collocation In-Place, Per DS1 Circuit			CLO	PE1BS		33.00									
		Physical Collocation - Virtual to Physical Collocation In-Place, per DS3 Circuit			CLO	PE1BE		37.00									
		Physical Collocation - Virtual to Physical Collocation In-Place/Relocation, space cable facilities assigned to Collocation Space, per 700 cable pairs or fraction thereof			CLO	PE1B7		592.00									
		Physical Collocation - Co-Carrier Cross Connects/Direct Connect - Fiber Cable Support Structure, per linear ft.			CLO	PE1ES	0.001										
		Physical Collocation - Co-Carrier Cross Connect/Direct Connect - Copper/Coax Cable Support Structure, per lin. ft.			CLO	PE1DS	0.0015										
		Physical Collocation - Co-Carrier Cross Connects/Direct Connect, Application Fee, per application			CLO	PE1DT		584.42									
		Physical Collocation - Copper Entrance Cable per Cable (CO manhole to vault splice)			CLO	PE1EA		1,136.597	42.808								
		Physical Collocation - Copper Entrance Cable Installation, per 100 Pairs			CLO	PE1EB		18.14									
		Physical Collocation - Fiber Entrance Cable per Cable (CO manhole to vault splice)			CLO	PE1EC		940.686	42.808								
		Physical Collocation - Fiber Entrance Cable Installation, per Fiber			CLO	PE1ED		7.256									
		Physical Collocation - Application Cost, Simple Augment			CLO	PE1KS		594.27		1.21							
		Physical Collocation - Application Cost, Minor Augment			CLO	PE1KM		833.26		1.21							
		Physical Collocation - Application Cost, Intermediate Augment			CLO	PE1K1		1,058.00		1.21							
		Physical Collocation - Co-Carrier Cross Connect/Direct Connect - Fiber Cable Support Structure, per cable	I		CLO	PE1DU		536.56									
		Physical Collocation - Co-Carrier Cross Connect/Direct Connect - Copper/Coax Cable Support Structure, per cable	I		CLO	PE1DV		536.56									
ADJACENT COLLOCATION																	
		Adjacent Collocation - Space Charge per Sq. Ft.			CLOAC	PE1JA	0.0939										
		Adjacent Collocation - Electrical Facility Charge per Linear Ft.			CLOAC	PE1JC	6.40										
		Adjacent Collocation - 2-Wire Cross-Connects			UEA,UHL,UDL,UCL	PE1P2	0.0264	12.32	11.83	6.04	5.45						
		Adjacent Collocation - 4-Wire Cross-Connects			UEA,UHL,UDL,UCL	PE1P4	0.0527	12.42	11.90	6.40	5.74						
		Adjacent Collocation - DS1 Cross-Connects			UEA,UHL,UDL,UCL	PE1P1	1.03	22.08	15.96	6.42	5.80						
		Adjacent Collocation - DS3 Cross-Connects			UEA,UHL,UDL,UCL	PE1P3	14.00	20.94	15.23	7.39	5.93						
		Adjacent Collocation - 2-Fiber Cross-Connect			CLOAC	PE1F2	2.37	20.94	15.23	7.40	5.93						
		Adjacent Collocation - 4-Fiber Cross-Connect			CLOAC	PE1F4	4.53	25.61	19.90	9.73	8.26						
		Adjacent Collocation - Application Fee			CLOAC	PE1JB		1,580.20									
		Adjacent Collocation - 120V, Single Phase Standby Power Rate per AC Breaker Amp			CLOAC	PE1FB	5.67										
		Adjacent Collocation - 240V, Single Phase Standby Power Rate per AC Breaker Amp			CLOAC	PE1FD	11.36										
		Adjacent Collocation - 120V, Three Phase Standby Power Rate per AC Breaker Amp			CLOAC	PE1FE	17.03										
		Adjacent Collocation - 277V, Three Phase Standby Power Rate per AC Breaker Amp			CLOAC	PE1FG	39.33										
PHYSICAL COLLOCATION IN THE REMOTE SITE																	
		Physical Collocation in the Remote Site - Application Fee			CLORS	PE1RA		308.38		168.60							
		Cabinet Space in the Remote Site per Bay/ Rack			CLORS	PE1RB	246.44										
		Physical Collocation in the Remote Site - Security Access - Key			CLORS	PE1RD		13.13									
		Physical Collocation in the Remote Site - Space Availability Report per Premises Requested			CLORS	PE1SR		116.13									

COLLOCATION - South Carolina														Attachment: 4		Exhibit: B	
CATEGORY		RATE ELEMENTS	Interim	Zone	BCS	USOC	RATES ($)					Svc Order Submitted Elec per LSR	Svc Order Submitted Manually per LSR	Incremental Charge - Manual Svc Order vs. Electronic-1st	Incremental Charge - Manual Svc Order vs. Electronic-Add'l	Incremental Charge - Manual Svc Order vs. Electronic-Disc 1st	Incremental Charge - Manual Svc Order vs. Electronic-Disc Add'l
							Rec	Nonrecurring		Nonrecurring Disconnect		OSS Rates ($)					
								First	Add'l	First	Add'l	SOMEC	SOMAN	SOMAN	SOMAN	SOMAN	SOMAN
		Physical Collocation in the Remote Site - Remote Site CLLI Code Request, per CLLI Code Requested			CLORS	PE1RE		37.64									
		Remote Site DLEC Data (BRSDD), per Compact Disk, per CO			CLORS	PE1RR		234.50									
		Physical Collocation - Security Escort for Basic Time - normally scheduled work, per half hour			CLORS	PE1BT		16.96	10.75								
		Physical Collocation - Security Escort for Overtime - outside of normally scheduled working hours on a scheduled work day, per half hour			CLORS	PE1OT		22.10	13.89								
		Physical Collocation - Security Escort for Premium Time - outside of scheduled work day, per half hour			CLORS	PE1PT		27.23	17.02								
PHYSICAL COLLOCATION IN THE REMOTE SITE - ADJACENT																	
		Remote Site-Adjacent Collocation - AC Power, per breaker amp			CLORS	PE1RS	6.27										
		Remote Site-Adjacent Collocation - Real Estate, per square foot			CLORS	PE1RT	0.134										
		Remote Site-Adjacent Collocation-Application Fee			CLORS	PE1RU		755.62	755.62								
	NOTE: If Security Escort and/or Add'l Engineering Fees become necessary for remote site collocation, the Parties will negotiate appropriate rates.																
VIRTUAL COLLOCATION																	
		Virtual Collocation - Application Fee			AMTFS	EAF		1,207.95		0.51							
		Virtual Collocation Administrative Only - Application Fee	I		AMTFS	VE1AF		743.66									
		Virtual Collocation - Cable Installation Cost, per cable			AMTFS	ESPCX		794.22		22.54							
		Virtual Collocation - Floor Space, per sq. ft.			AMTFS	ESPVX	3.95										
		Virtual Collocation - Power, per fused amp			AMTFS	ESPAX	9.19										
		Virtual Collocation - Cable Support Structure, per entrance cable			AMTFS	ESPSX	18.66										
		Virtual Collocation - 2-wire Cross Connects (loop)			UEANL,UEA,UDN,UDC,UAL,UHL,UCL,UEQ, UNCVX, UNCDX, UNCNX	UEAC2	0.0317	12.32	11.83	6.04	5.45						
		Virtual Collocation - 4-wire Cross Connects (loop)			UEA,UHL,UCL,UDL, UAL, UDN, UNCVX, UNCDX	UEAC4	0.0634	12.42	11.90	6.40	5.74						
		Virtual Collocation - 2-Fiber Cross Connects			UDL12, UDLO3, U1T48, U1T12, U1T03, ULDO3, ULD12, ULD48, UDF	CNC2F	2.86	20.94	15.23	7.40	5.93						
		Virtual Collocation - 4-Fiber Cross Connects			UDL12, UDLO3, U1T48, U1T12, U1T03, ULDO3, ULD12, ULD48, UDF	CNC4F	5.71	25.61	19.90	9.73	8.26						
		Virtual collocation - Special Access & UNE,cross-connect per DS1			USL,ULC, ULR, UXTD1, UNC1X, ULDD1, U1TD1, USLEL, UNLD1, UEPEX, UEPDX	CNC1X	1.12	22.08	15.96	6.42	5.80						
		Virtual collocation - Special Access & UNE, cross-connect per DS3			USL,UE3, U1TD3, UXTS1, UXTD3, UNC3X, UNCSX, ULDD3, U1TS1, ULDS1, UDLSX, UNLD3	CND3X	14.21	20.94	15.23	7.39	5.93						
		Virtual Collocation - Co-Carrier Cross Connects - Fiber Cable Support Structure, per linear foot			AMTFS	VE1CB	0.0022										
		Virtual Collocation - Co-Carrier Cross Connects - Copper/Coax Cable Support Structure, per linear ft			AMTFS	VE1CD	0.0033										
		Virtual Collocation - Co-Carrier Cross Connects - Fiber Cable Support Structure,per cable			AMTFS	VE1CC		536.56									

COLLOCATION - South Carolina														Attachment: 4		Exhibit: B	
CATEGORY		RATE ELEMENTS	Interim	Zone	BCS	USOC	RATES ($)					Svc Order Submitted Elec per LSR	Svc Order Submitted Manually per LSR	Incremental Charge - Manual Svc Order vs. Electronic-1st	Incremental Charge - Manual Svc Order vs. Electronic-Add'l	Incremental Charge - Manual Svc Order vs. Electronic-Disc 1st	Incremental Charge - Manual Svc Order vs. Electronic-Disc Add'l
							Rec	Nonrecurring		Nonrecurring Disconnect		OSS Rates ($)					
								First	Add'l	First	Add'l	SOMEC	SOMAN	SOMAN	SOMAN	SOMAN	SOMAN
		Virtual Collocation - Co-Carrier Cross Connects - Copper/Coax Cable Support Structure, per cable			AMTFS	VE1CE		536.56									
		Virtual Collocation Cable Records - per request			AMTFS	VE1BA		760.98	489.20	133.29							
		Virtual Collocation Cable Records - VG/DS0 Cable, per cable record			AMTFS	VE1BB		327.65		189.54							
		Virtual Collocation Cable Records - VG/DS0 Cable, per each 100 pair			AMTFS	VE1BC		4.82		5.91							
		Virtual Collocation Cable Records - DS1, per T1TIE			AMTFS	VE1BD		2.26		2.77							
		Virtual Collocation Cable Records - DS3, per T3TIE			AMTFS	VE1BE		7.90		9.68							
		Virtual Collocation Cable Records - Fiber Cable, per 99 fiber records			AMTFS	VE1BF		84.68		77.30							
		Virtual collocation - Security Escort - Basic, per half hour			AMTFS	SPTBX		16.96	10.75								
		Virtual collocation - Security Escort - Overtime, per half hour			AMTFS	SPTOX		22.10	13.89								
		Virtual collocation - Security Escort - Premium, per half hour			AMTFS	SPTPX		27.23	17.02								
		Virtual collocation - Maintenance in CO - Basic, per half hour			AMTFS	CTRLX		27.99	10.75								
		Virtual collocation - Maintenance in CO - Overtime, per half hour			AMTFS	SPTOM		36.56	13.89								
		Virtual collocation - Maintenance in CO - Premium per half hour			AMTFS	SPTPM		45.12	17.02								
		Virtual Collocation - Request Resend of CFA Information, per CLLI			AMTFS	VE1QR		77.71									
VIRTUAL COLLOCATION																	
		Virtual Collocation - 2-wire Cross Connect, Exchange Port 2-Wire Analog - Res			UEPSR	VE1R2	0.0317	12.32	11.83	6.04	5.45						
		Virtual Collocation 2-Wire Cross Connect, Exchange Port 2-Wire Line Side PBX Trunk - Bus			UEPSP	VE1R2	0.0317	12.32	11.83	6.04	5.45						
		Virtual Collocation 2-Wire Cross Connect, Exchange Port 2-Wire Voice Grade PBX Trunk - Res			UEPSE	VE1R2	0.0317	12.32	11.83	6.04	5.45						
		Virtual Collocation 2-Wire Cross Connect, Exchange Port 2-Wire Analog Bus			UEPSB	VE1R2	0.0317	12.32	11.83	6.04	5.45						
		Virtual Collocation 2-Wire Cross Connect, Exchnage Port 2-Wire ISDN			UEPSX	VE1R2	0.0317	12.32	11.83	6.04	5.45						
		Virtual Collocation 2-Wire Cross Connect, Exchange Port 2-Wire ISDN			UEPTX	VE1R2	0.0317	12.32	11.83	6.04	5.45						
		Virtual Collocation 4-Wire Cross Connect, Exchange Port 4-Wire ISDN DS1			UEPEX	VE1R4	1.12	22.08	15.96	6.42	5.80						
	Note: Rates displaying an "R" in Interim column are interim and subject to rate true-up as set forth in General Terms and Conditions.																

COLLOCATION - Tennessee

CATEGORY	RATE ELEMENTS	Interim	Zone	BCS	USOC	RATES ($) Rec	Nonrecurring First	Nonrecurring Add'l	Nonrecurring Disconnect First	Nonrecurring Disconnect Add'l	Svc Order Submitted Elec per LSR	Svc Order Submitted Manually per LSR	Attachment: 4 Incremental Charge - Manual Svc Order vs. Electronic-1st	Attachment: 4 Incremental Charge - Manual Svc Order vs. Electronic-Add'l	Exhibit: B Incremental Charge - Manual Svc Order vs. Electronic-Disc 1st	Exhibit: B Incremental Charge - Manual Svc Order vs. Electronic-Disc Add'l
											OSS Rates ($)					
											SOMEC	SOMAN	SOMAN	SOMAN	SOMAN	SOMAN
PHYSICAL COLLOCATION																
	Physical Collocation 2-Wire Cross Connect, Exchange Port 2-Wire Analog - Res			UEPSR	PE1R2	0.30	19.20	19.20					20.35	10.54	13.32	1.40
	Physical Collocation 2-Wire Cross Connect, Exchange Port 2-Wire Line Side PBX Trunk - Bus			UEPSP	PE1R2	0.30	19.20	19.20					20.35	10.54	13.32	1.40
	Physical Collocation 2-Wire Cross Connect, Exchange Port 2-Wire Voice Grade PBX Trunk - Res			UEPSE	PE1R2	0.30	19.20	19.20					20.35	10.54	13.32	1.40
	Physical Collocation 2-Wire Cross Connect, Exchange Port 2-Wire Analog - Bus			UEPSB	PE1R2	0.30	19.20	19.20					20.35	10.54	13.32	1.40
	Physical Collocation 2-Wire Cross Connect, Exchange Port 2-Wire ISDN			UEPSX	PE1R2	0.30	19.20	19.20					20.35	10.54	13.32	1.40
	Physical Collocation 2-Wire Cross Connect, Exchange Port 2-Wire ISDN			UEPTX	PE1R2	0.30	19.20	19.20					20.35	10.54	13.32	1.40
	Physical Collocation 4-Wire Cross Connect, Exchange Port 4-Wire ISDN DS1			UEPEX	PE1R4	0.50	19.20	19.20					20.35	10.54	13.32	1.40
PHYSICAL COLLOCATION																
	Physical Collocation - Cageless - Application Fee			CLO	PE1CH		2,633.00									
	Physical Collocation Administrative Only - Application Fee	I		CLO	PE1BL		743.25									
	Physical Collocation - Space Preparation - Firm Order Processing	I		CLO	PE1SJ		1,204.00									
	Physical Collocation - Space Preparation - C.O. Modification per square ft.	I		CLO	PE1SK	2.74										
	Physical Collocation - Space Preparation, Common Systems Modifications-Cageless, per square foot	I		CLO	PE1SL	2.95										
	Physical Collocation - Space Preparation - Common Systems Modifications-Caged, per cage	I		CLO	PE1SM	100.14										
	Physical Collocation - Cageless - Cable Installation Cost, per cable			CLO	PE1ZA		1,749.00									
	Physical Collocation - Cageless - Floor Space, per sq. ft.			CLO	PE1ZB	3.91										
	Physical Collocation - Floor Space, per sq feet	I		CLO	PE1PJ	5.94										
	Physical Collocation - Cageless - Cable Support Structure, per Entrance Cable			CLO	PE1CJ	17.87										
	Physical Collocation - Cable Support Structure, per Entrance Cable	I		CLO	PE1PM	19.80										
	Physical Collocation - Cageless - Power, per Fused Amp			CLO	PE1ZC	6.79										
	Physical Collocation - Power, -48V DC Power - per Fused Amp	I		CLO	PE1PL	8.87										
	Physical Collocation - Power Reconfiguration Only, Application Fee	I		CLO	PE1PR		400.10									
	Physical Collocation - Power, 120V AC Power, Single Phase, per Breaker Amp	I		CLO	PE1FB	5.60										
	Physical Collocation - Power, 240V AC Power, Single Phase, per Breaker Amp	I		CLO	PE1FD	11.22										
	Physical Collocation - Power, 120V AC Power, Three Phase, per Breaker Amp	I		CLO	PE1FE	16.82										
	Physical Collocation - Power, 277V AC Power, Three Phase, per Breaker Amp	I		CLO	PE1FG	38.84										
	Physical Collocation - 2-wire cross-connect, loop, provisioning	I		UEANL,UEQ, UNLDX, UNCNX, UEA, UCL, UAL, UHL, UDC, UDN, UNCVX	PE1P2	0.033	33.82	31.92								
	Physcial Collocation - Cageless - 2-Wire Cross-Connects			UNLDX, UNCNX	PE1ZD	0.57	11.62	9.90	10.38	8.66						
	Physical Collocation - 4-wire cross-connect, loop, provisioning	I		UEA, UHL, UNCVX, UNCDX, UCL, UDL	PE1P4	0.066	33.94	31.95								
	Physical Collocation - Cageless - 4-Wire Cross Connects			UNCVX, UNCDX,	PE1ZE	0.57	11.81	10.04	10.44	8.67						

COLLOCATION - Tennessee														Attachment: 4		Exhibit: B	
CATEGORY		RATE ELEMENTS	Interim	Zone	BCS	USOC	RATES ($)					Svc Order Submitted Elec per LSR	Svc Order Submitted Manually per LSR	Incremental Charge - Manual Svc Order vs. Electronic-1st	Incremental Charge - Manual Svc Order vs. Electronic-Add'l	Incremental Charge - Manual Svc Order vs. Electronic-Disc 1st	Incremental Charge - Manual Svc Order vs. Electronic-Disc Add'l
							Rec	Nonrecurring		Nonrecurring Disconnect		OSS Rates ($)					
								First	Add'l	First	Add'l	SOMEC	SOMAN	SOMAN	SOMAN	SOMAN	SOMAN
		Physical Collocation -DS1 Cross-Connect for Physical Collocation, provisioning	I		WDS1L,WDS1S, UXTD1, ULDD1, USLEL, UNLD1, UEPEX, UEPDX, USL, ULC, U1TD1, UNC1X	PE1P1	1.51	53.27	40.16								
		Physical Collocation - Cageless - DS1 Cross Connects			WDS1L,WDS1S, UXTD1, ULDD1, USLEL, UNLD1, UEPEX, UEPDX	PE1ZF	1.32	32.22	17.76	10.46	8.75						
		Physical Collocation - DS3 Cross-Connect, provisioning	I		UE3,U1TD3, UXTD3, UXTS1, UNC3X, UNCSX, ULDD3, U1TS1,ULDS1, UNLD3	PE1P3	19.26	52.37	38.89								
		Physcial Collocation - Cageless - DS3 Cross Connects			UE3,U1TD3, UXTD3, UXTS1, UNC3X, UNCSX, ULDD3, U1TS1,ULDS1, UNLD3	PE1ZG	12.32	29.97	16.30	12.03	8.99						
		Physical Collocation - 2-Fiber Cross-Connect	I		CLO, ULDO3, ULD12, ULD48, U1TO3, U1T12, U1T48, UDLO3, UDL12, UDF	PE1F2	15.64	41.56	29.82	12.96	10.34			2.69	2.69	1.56	1.56
		Physical Collocation - Cageless - 2 Fiber Cross Connect			CLO, ULDO3, ULD12, ULD48, U1TO3, U1T12, U1T48, UDLO3, UDL12, UDF	PE1CK	3.03	41.56	29.82	12.96	10.34						
		Physical Collocation - 4-Fiber Cross-Connect	I		ULDO3, ULD12, ULD48, U1TO3, U1T12, U1T48, UDLO3, UDL12, UDF	PE1F4	28.11	50.53	38.78	16.97	14.35			2.69	2.69	1.56	1.56
		Physical Collocation - Cageless - 4-Fiber Cross-Connect			ULDO3, ULD12, ULD48, U1TO3, U1T12, U1T48, UDLO3, UDL12, UDF	PE1CL	6.06	50.53	38.78	16.97	14.35						
		Physical Collocation - Space enclosure, welded wire, first 100 square feet	I		CLO	PE1BW	218.53										
		Physical Collocation - Space enclosure, welded wire, each additional 50 square feet	I		CLO	PE1CW	21.44										
		Physical Collocation - Security Access System - Security System per Central Office	I		CLO	PE1AX	55.99										
		Physical Collocation -Security Access System - New Card Activation, per Card Activation (First), per State	I		CLO	PE1A1	0.059	55.67									
		Physical Collocation-Security Access System-Administrative Change, existing Access Card, per Request, per State, per Card			CLO	PE1AA		15.61									
		Physical Collocation - Security Access System - Replace Lost or Stolen Card, per Card			CLO	PE1AR		45.64									
		Physical Collocation - Security Access - Initial Key, per Key			CLO	PE1AK		26.24									
		Physical Collocation - Security Access - Key, Replace Lost or Stolen Key, per Key			CLO	PE1AL		26.24									

COLLOCATION - Tennessee														Attachment: 4		Exhibit: B	
CATEGORY		RATE ELEMENTS	Interim	Zone	BCS	USOC	RATES ($)					Svc Order Submitted Elec per LSR	Svc Order Submitted Manually per LSR	Incremental Charge - Manual Svc Order vs. Electronic-1st	Incremental Charge - Manual Svc Order vs. Electronic-Add'l	Incremental Charge - Manual Svc Order vs. Electronic-Disc 1st	Incremental Charge - Manual Svc Order vs. Electronic-Disc Add'l
							Rec	Nonrecurring		Nonrecurring Disconnect		OSS Rates ($)					
								First	Add'l	First	Add'l	SOMEC	SOMAN	SOMAN	SOMAN	SOMAN	SOMAN
		Physical Collocation - Space Availability Report, per Central Office Requested			CLO	PE1SR		2,027.00	2,154.00								
		Physical Collocation - CFA Information Resend Request, per premises, per request			CLO	PE1C9		77.67									
		Physical Collocation - Cable Records, per request	I		CLO	PE1CR		1,711.00									
		Physical Collocation, Cable Records, VG/DS0 Cable, per cable record (maximum 3600 records)	I		CLO	PE1CD		925.06									
		Physical Collocation, Cable Records, VG/DS0 Cable, per each 100 pair	I		CLO	PE1CO		18.05									
		Physical Collocation, Cable Records, DS1, per T1 TIE	I		CLO	PE1C1		8.45									
		Physical Collocation, Cable Records, DS3, per T3 TIE	I		CLO	PE1C3		29.57									
		Physical Collocation - Cable Records, Fiber Cable, per cable record (maximum 99 records)	I		CLO	PE1CB		279.42									
		Physcial Collocation - Cageless - Security Escort - Basic, per Half Hour			CLO	PE1ZM		33.15	20.44								
		Physical Collocation - Cageless - Security Escort - Overtime, per Half Hour			CLO	PE1ZN		41.50	25.61								
		Physical Collocation - Cageless - Security Escort - Premium, per Half Hour			CLO	PE1ZO		49.86	30.79								
		Physical Collocation - Security Escort for Basic Time - normally scheduled work, per half hour			CLO	PE1BT		33.91	21.49								
		Physical Collocation - Security Escort for Overtime - outside of normally scheduled working hours on a scheduled work day, per half hour			CLO	PE1OT		44.17	27.76								
		Physical Collocation - Security Escort for Premium Time - outside of scheduled work day, per half hour			CLO	PE1PT		54.42	34.02								
		Physical Collocation - Virtual to Physical Collocation Relocation, per Voice Grade Circuit	I		CLO	PE1BV		33.00									
		Physical Collocation - Virtual to Physical Collocation Relocation, per DSO Circuit	I		CLO	PE1BO		33.00									
		Physical Collocation - Virtual to Physical Collocation Relocation, per DS1 Circuit	I		CLO	PE1B1		52.00									
		Physical Collocation - Virtual to Physical Collocation Relocation, per DS3 Circuit	I		CLO	PE1B3		52.00									
		Physical Collocation - Virtual to Physical Collocation In-Place, Per Voice Grade Circuit	I		CLO	PE1BR		23.00									
		Physical Collocation Virtual to Physical Collocation In-Place, Per DSO Circuit	I		CLO	PE1BP		23.00									
		Physical Collocation - Virtual to Physical Collocation In-Place, Per DS1 Circuit	I		CLO	PE1BS		33.00									
		Physical Collocation - Virtual to Physical Collocation In-Place, per DS3 Circuit	I		CLO	PE1BE		37.00									
		Physical Collocation - Virtual to Physical Collocation In-Place/Relocation, space cable facilities assigned to Collocation Space, per 700 cable pairs or fraction thereof	I		CLO	PE1B7		592.00									
		Physical Caged Collocation-App Cost(initial & sub)-Planning, per request			CLO	PE1AC	16.16	2,903.66									
		Physical Caged Collocation-Space Prep-Grounding, per location			CLO	PE1BB	4.32										
		Physical Collocation, Caged Collocation - Space Prep-Power Cable, 40 AMP, includes 20 AMP A and B Feed			CLO	PE1SN		142.40									
		Physical Collocation, Caged Collocation - Space Prep-Power Cable, 100 AMP, includes 50 AMP A and B Feed			CLO	PE1SO		185.72									
		Physical Collocation, Caged Collocation - Space Prep-Power Cable, 200 AMP, includes 100 AMP A and B Feed			CLO	PE1SP		242.05									
		Physical Caged Collocation-Space Enclosure-Cage Preparation, per first 100 sq. ft.			CLO	PE1S1	110.97										
		Phycical Caged Collocation-Space Enclosure-Cage Preparation2, per add'l 50 sq. ft.			CLO	PE1S5	55.49										

COLLOCATION - Tennessee

CATEGORY		RATE ELEMENTS	Interim	Zone	BCS	USOC	RATES ($)					Svc Order Submitted Elec per LSR	Svc Order Submitted Manually per LSR	Attachment: 4		Exhibit: B	
														Incremental Charge - Manual Svc Order vs. Electronic-1st	Incremental Charge - Manual Svc Order vs. Electronic-Add'l	Incremental Charge - Manual Svc Order vs. Electronic-Disc 1st	Incremental Charge - Manual Svc Order vs. Electronic-Disc Add'l
							Rec	Nonrecurring		Nonrecurring Disconnect		OSS Rates ($)					
								First	Add'l	First	Add'l	SOMEC	SOMAN	SOMAN	SOMAN	SOMAN	SOMAN
		Physical Caged collocation-Cable Installation-Entrance Fiber Structure, interduct per ft.			CLO	PE1CP	0.0156										
		Phycical Caged Collocation-Cable Installation-Entrance Fiber, per cable			CLO	PE1CQ	2.56	944.27									
		Physical Caged Collocation-Floor Space-Land & Buildings, per sq. ft.			CLO	PE1FS	5.94										
		Physical Caged Collocation-Cable Support Structure-Cable Racking, per entrance cable			CLO	PE1CS	21.47										
		Physical Caged Collocation-Power-Power Construction, per amp DC plant			CLO	PE1PN	3.55										
		Physical Caged Collocation-Power-Power Consumption,per amp AC usage			CLO	PE1PO	2.03										
		Physical Caged Collocation-2-wire Cross Connects-Voice Grade ckts, per ckt.			UE3,U1TD3, UXTD3, UXTS1, UNC3X, UNCSX, ULDD3, U1TS1,ULDS1, UNLD3	PE12C	0.0475	7.68									
		Physical Caged Collocation-4-wire Cross Connects-Voice Grade Ckts, per ckt.			UE3,U1TD3, UXTD3, UXTS1, UNC3X, UNCSX, ULDD3, U1TS1,ULDS1, UNLD3	PE14C	0.0475	7.68									
		Physical Caged Collocation-DS1 Cross Connects-connection to DCS, per ckt.			UE3,U1TD3, UXTD3, UXTS1, UNC3X, UNCSX, ULDD3, U1TS1,ULDS1, UNLD3	PE11S	7.68	41.65									
		Physical Caged Collocation-DS1 Cross Connects-Connection to DSX, per ckt.			UE3,U1TD3, UXTD3, UXTS1, UNC3X, UNCSX, ULDD3, U1TS1,ULDS1, UNLD3	PE11X	0.38	41.65									
		Physical Caged Collocation-DS3 Cross Connects-Connection to DCS, per ckt.			U1TD3, UXTD3, UXTS1, UNC3X, UNCSX, ULDD3, U1TS1,ULDS1, UNLD3	PE13S	53.96	298.03									
		Physical Caged Collocation-DS3 Cross Connects-Connection to DSX, per ckt.			U1TD3, UXTD3, UXTS1, UNC3X, UNCSX, ULDD3, U1TS1,ULDS1, UNLD3	PE13X	9.32	298.03									
		Physical Caged Collocation-Security Access-Access Cards, per 5 Cards			CLO	PE1A2		76.10									
		Physical Collocation - Co-Carrier Cross Connects/Direct Connect - Fiber Cable Support Structure, per linear ft.			CLO	PE1ES	0.0013										
		Physical Collocation - Cageless - Co-Carrier Cross Connects - Fiber Cable Support Structure, per linear ft.			CLO	PE1ZH	0.0031										
		Physical Collocation - Cageless - Co-Carrier Cross Connects- Fiber Cable Support Structure, per cable			CLO	PE1ZK		555.03									
		Physical Collocation - Co-Carrier Cross Connect/Direct Connect - Copper/Coax Cable Support Structure, per lin. ft.			CLO	PE1DS	0.0019										
		Physical Collocation - Cageless - Co-Carrier Cross Connects - Copper/Coax Cable Support Structure, per linear ft.			CLO	PE1ZJ	0.0045										

COLLOCATION - Tennessee													Attachment: 4		Exhibit: B	
CATEGORY	RATE ELEMENTS	Interim	Zone	BCS	USOC	RATES ($)					Svc Order Submitted Elec per LSR	Svc Order Submitted Manually per LSR	Incremental Charge - Manual Svc Order vs. Electronic-1st	Incremental Charge - Manual Svc Order vs. Electronic-Add'l	Incremental Charge - Manual Svc Order vs. Electronic-Disc 1st	Incremental Charge - Manual Svc Order vs. Electronic-Disc Add'l
						Rec	Nonrecurring		Nonrecurring Disconnect		OSS Rates ($)					
							First	Add'l	First	Add'l	SOMEC	SOMAN	SOMAN	SOMAN	SOMAN	SOMAN
	Physical Collocation - Cageless - Co-Carrier Cross Connects - Copper/Coax Cable Support Structure, per cable			CLO	PE1ZL		555.03									
	Physical Collocation - Co-Carrier Cross Connects/Direct Connect, Application Fee, per application			CLO	PE1DT		585.09									
	Physical Collocation - Copper Entrance Cable per Cable (CO manhole to vault splice)			CLO	PE1EA		1,279.91	42.784								
	Physical Collocation - Copper Entrance Cable Installation, per 100 Pairs			CLO	PE1EB		18.13									
	Physical Collocation - Fiber Entrance Cable per Cable (CO manhole to vault splice)			CLO	PE1EC		1,084.11	42.784								
	Physical Collocation - Fiber Entrance Cable Installation, per Fiber			CLO	PE1ED		7.252									
	Physical Collocation - Co-Carrier Cross Connect/Direct Connect - Fiber Cable Support Structure, per cable	I		CLO	PE1DU		555.03									
	Physical Collocation - Co-Carrier Cross Connect/Direct Connect - Copper/Coax Cable Support Structure, per cable	I		CLO	PE1DV		555.03									
ADJACENT COLLOCATION																
	Adjacent Collocation - Space Charge per Sq. Ft.			CLOAC	PE1JA	0.0656										
	Adjacent Collocation - Electrical Facility Charge per Linear Ft.			CLOAC	PE1JC	5.53										
	Adjacent Collocation - 2-Wire Cross-Connects			UEA,UHL,UDL,UCL	PE1P2	0.34	11.12	10.18	11.33	10.23			1.77	1.77	1.12	1.12
	Adjacent Collocation - 4-Wire Cross-Connects			UEA,UHL,UDL,UCL	PE1P4	0.33	11.30	10.31	11.62	10.44			1.77	1.77	1.12	1.12
	Adjacent Collocation - DS1 Cross-Connects			UEA,UHL,UDL,UCL	PE1P1	1.70	28.39	16.88	11.65	10.54			1.77	1.77	1.12	1.12
	Adjacent Collocation - DS3 Cross-Connects			UEA,UHL,UDL,UCL	PE1P3	19.03	26.23	15.51	13.40	10.77			1.77	1.77	1.12	1.12
	Adjacent Collocation - 2-Fiber Cross-Connect			CLOAC	PE1F2	3.49	26.23	15.51	13.41	10.78			1.77	1.77	1.12	1.12
	Adjacent Collocation - 4-Fiber Cross-Connect			CLOAC	PE1F4	6.50	29.75	19.02	17.60	14.97			1.77	1.77	1.12	1.12
	Adjacent Collocation - Application Fee			CLOAC	PE1JB		2,973.00									
	Adjacent Collocation - 120V, Single Phase Standby Power Rate per AC Breaker Amp			CLOAC	PE1FB	5.81										
	Adjacent Collocation - 240V, Single Phase Standby Power Rate per AC Breaker Amp			CLOAC	PE1FD	11.64										
	Adjacent Collocation - 120V, Three Phase Standby Power Rate per AC Breaker Amp			CLOAC	PE1FE	17.45										
	Adjacent Collocation - 277V, Three Phase Standby Power Rate per AC Breaker Amp			CLOAC	PE1FG	40.30										
PHYSICAL COLLOCATION IN THE REMOTE SITE																
	Physical Collocation in the Remote Site - Application Fee			CLORS	PE1RA		580.20		312.76							
	Cabinet Space in the Remote Site per Bay/ Rack			CLORS	PE1RB	220.41										
	Physical Collocation in the Remote Site - Security Access - Key			CLORS	PE1RD		24.69									
	Physical Collocation in the Remote Site - Space Availability Report per Premises Requested			CLORS	PE1SR		218.49									
	Physical Collocation in the Remote Site - Remote Site CLLI Code Request, per CLLI Code Requested			CLORS	PE1RE		70.81									
	Remote Site DLEC Data (BRSDD), per Compact Disk, per CO			CLORS	PE1RR		234.15									
	Physical Collocation - Security Escort for Basic Time - normally scheduled work, per half hour			CLORS	PE1BT		33.91	21.49								
	Physical Collocation - Security Escort for Overtime - outside of normally scheduled working hours on a scheduled work day, per half hour			CLORS	PE1OT		44.17	27.76								
	Physical Collocation - Security Escort for Premium Time - outside of scheduled work day, per half hour			CLORS	PE1PT		54.42	34.02								
PHYSICAL COLLOCATION IN THE REMOTE SITE - ADJACENT																
	Remote Site-Adjacent Collocation - AC Power, per breaker amp			CLORS	PE1RS	6.27										
	Remote Site-Adjacent Collocation - Real Estate, per square foot			CLORS	PE1RT	0.134										
	Remote Site-Adjacent Collocation-Application Fee			CLORS	PE1RU		755.62	755.62								
	NOTE: If Security Escort and/or Add'l Engineering Fees become necessary for remote site collocation, the Parties will negotiate appropriate rates.															
VIRTUAL COLLOCATION																

COLLOCATION - Tennessee

CATEGORY		RATE ELEMENTS	Interim	Zone	BCS	USOC	RATES ($)					Svc Order Submitted Elec per LSR	Svc Order Submitted Manually per LSR	Attachment: 4		Exhibit: B	
														Incremental Charge - Manual Svc Order vs. Electronic-1st	Incremental Charge - Manual Svc Order vs. Electronic-Add'l	Incremental Charge - Manual Svc Order vs. Electronic-Disc 1st	Incremental Charge - Manual Svc Order vs. Electronic-Disc Add'l
							Rec	Nonrecurring		Nonrecurring Disconnect		OSS Rates ($)					
								First	Add'l	First	Add'l	SOMEC	SOMAN	SOMAN	SOMAN	SOMAN	SOMAN
		Virtual Collocation - Application Fee			AMTFS	EAF		2,633.00						2.07	2.81	0.67	1.41
		Virtual Collocation Administrative Only - Application Fee	I		AMTFS	VE1AF		743.25									
		Virtual Collocation - Cable Installation Cost, per cable			AMTFS	ESPCX		1,749.00						2.07	2.81	0.67	1.41
		Virtual Collocation - Floor Space, per sq. ft.			AMTFS	ESPVX	3.91										
		Virtual Collocation - Power, per fused amp			AMTFS	ESPAX	6.79										
		Virtual Collocation - Cable Support Structure, per entrance cable			AMTFS	ESPSX	17.87										
		Virtual Collocation - 2-wire Cross Connects (loop)			UEANL,UEA,UDN,UDC,UAL,UHL,UCL,UEQ, UNCVX, UNCDX, UNCNX	UEAC2	0.57	11.62	9.90	10.38	8.66			2.07	2.81	0.67	1.41
		Virtual Collocation - 4-wire Cross Connects (loop)			UEA,UHL,UCL,UDL, UAL, UDN, UNCVX, UNCDX	UEAC4	0.57	11.81	10.04	10.44	8.67			2.07	2.81	0.67	1.41
		Virtual Collocation - 2-Fiber Cross Connects			UDL12, UDLO3, U1T48, U1T12, U1T03, ULDO3, ULD12, ULD48, UDF	CNC2F	3.03	41.56	29.82	12.96	10.34			2.69	2.69	1.56	1.56
		Virtual Collocation - 4-Fiber Cross Connects			UDL12, UDLO3, U1T48, U1T12, U1T03, ULDO3, ULD12, ULD48, UDF	CNC4F	6.06	50.53	38.78	16.97	14.35			2.69	2.69	1.56	1.56
		Virtual collocation - Special Access & UNE, cross-connect per DS1			USL,ULC,ULR, UXTD1, UNC1X, ULDD1, U1TD1, USLEL, UNLD1, UEPEX, UEPDX	CNC1X	1.32	32.22	17.76	10.46	8.75			2.07	2.81	0.67	1.41
		Virtual collocation - Special Acess & UNE, cross-connect per DS3			USL,UE3, U1TD3, UXTS1, UXTD3, UNC3X, UNCSX, ULDD3, U1TS1, ULDS1, UDLSX, UNLD3	CND3X	12.32	29.97	16.30	12.03	8.99			2.07	2.81	0.67	1.41
		Virtual Collocation - Co-Carrier Cross Connects - Fiber Cable Support Structure, per linear foot			AMTFS	VE1CB	0.0031										
		Virtual Collocation - Co-Carrier Cross Connects - Copper/Coax Cable Support Structure, per linear ft			AMTFS	VE1CD	0.0045										
		Virtual Collocation - Co-Carrier Cross Connects - Fiber Cable Support Structure,per cable			AMTFS	VE1CC		555.03						2.07	2.81	0.67	1.41
		Virtual Collocation - Co-Carrier Cross Connects - Copper/Coax Cable Support Structure, per cable			AMTFS	VE1CE		555.03						2.07	2.81	0.67	1.41
		Virtual Collocation Cable Records - per request			AMTFS	VE1BA		1,711.00									
		Virtual Collocation Cable Records - VG/DS0 Cable, per cable record			AMTFS	VE1BB		925.06									
		Virtual Collocation Cable Records - VG/DS0 Cable, per each 100 pair			AMTFS	VE1BC		18.05									
		Virtual Collocation Cable Records - DS1, per T1TIE			AMTFS	VE1BD		8.45									
		Virtual Collocation Cable Records - DS3, per T3TIE			AMTFS	VE1BE		29.57									
		Virtual Collocation Cable Records - Fiber Cable, per 99 fiber records			AMTFS	VE1BF		279.42									
		Virtual collocation - Security Escort - Basic, per half hour			AMTFS	SPTBX		33.15						2.07	2.81	0.67	1.41
		Virtual collocation - Security Escort - Overtime, per half hour			AMTFS	SPTOX		41.50						2.07	2.81	0.67	1.41
		Virtual collocation - Security Escort - Premium, per half hour			AMTFS	SPTPX		49.86						2.07	2.81	0.67	1.41
		Virtual collocation - Maintenance in CO - Basic, per half hour			AMTFS	CTRLX		30.64						2.07	2.81	0.67	1.41
		Virtual collocation - Maintenance in CO - Overtime, per half hour			AMTFS	SPTOM		35.77						2.07	2.81	0.67	1.41

COLLOCATION - Tennessee														Attachment: 4		Exhibit: B	
CATEGORY		RATE ELEMENTS	Interim	Zone	BCS	USOC	RATES ($)					Svc Order Submitted Elec per LSR	Svc Order Submitted Manually per LSR	Incremental Charge - Manual Svc Order vs. Electronic-1st	Incremental Charge - Manual Svc Order vs. Electronic-Add'l	Incremental Charge - Manual Svc Order vs. Electronic-Disc 1st	Incremental Charge - Manual Svc Order vs. Electronic-Disc Add'l
							Rec	Nonrecurring		Nonrecurring Disconnect		OSS Rates ($)					
								First	Add'l	First	Add'l	SOMEC	SOMAN	SOMAN	SOMAN	SOMAN	SOMAN
		Virtual collocation - Maintenance in CO - Premium per half hour			AMTFS	SPTPM		40.90						2.07	2.81	0.67	1.41
		Virtual Collocation - Request Resend of CFA Information, per CLLI			AMTFS	VE1QR		77.67									
VIRTUAL COLLOCATION																	
		Virtual Collocation - 2-wire Cross Connect, Exchange Port 2-Wire Analog - Res			UEPSR	VE1R2	0.30	19.20	19.20					20.35	10.54	13.32	1.40
		Virtual Collocation 2-Wire Cross Connect, Exchange Port 2-Wire Line Side PBX Trunk - Bus			UEPSP	VE1R2	0.30	19.20	19.20					20.35	10.54	13.32	1.40
		Virtual Collocation 2-Wire Cross Connect, Exchange Port 2-Wire Voice Grade PBX Trunk - Res			UEPSE	VE1R2	0.30	19.20	19.20					20.35	10.54	13.32	1.40
		Virtual Collocation 2-Wire Cross Connect, Exchange Port 2-Wire Analog Bus			UEPSB	VE1R2	0.30	19.20	19.20					20.35	10.54	13.32	1.40
		Virtual Collocation 2-Wire Cross Connect, Exchnage Port 2-Wire ISDN			UEPSX	VE1R2	0.30	19.20	19.20					20.35	10.54	13.32	1.40
		Virtual Collocation 2-Wire Cross Connect, Exchange Port 2-Wire ISDN			UEPTX	VE1R2	0.30	19.20	19.20					20.35	10.54	13.32	1.40
		Virtual Collocation 4-Wire Cross Connect, Exchange Port 4-Wire ISDN DS1			UEPEX	VE1R4	0.50	19.20	19.20					20.35	10.54	13.32	1.40
	Note: Rates displaying an "R" in Interim column are interim and subject to rate true-up as set forth in General Terms and Conditions.																

Attachment 5

Access to Numbers and Number Portability

TABLE OF CONTENTS

1. NON-DISCRIMINATORY ACCESS TO TELEPHONE NUMBERS 3

2. LOCAL SERVICE PROVIDER NUMBER PORTABILITY - PERMANENT SOLUTION (LNP)..... 3

3. OPERATIONAL SUPPORT SYSTEM (OSS) RATES 4

ACCESS TO NUMBERS AND NUMBER PORTABILITY

1. NON-DISCRIMINATORY ACCESS TO TELEPHONE NUMBERS

1.1 During the term of this Agreement, where BLC Management is utilizing its own switch, BLC Management shall contact the North American Numbering Plan Administrator, NeuStar, for the assignment of numbering resources. In order to be assigned a Central Office Code, BLC Management will be required to complete the Central Office Code (NXX) Assignment Request and Confirmation Form (Code Request Form) in accordance with Industry Numbering Committee's Central Office Code (NXX) Assignment Guidelines (INC 95-0407-008).

1.2 Where BellSouth provides local switching or resold services to BLC Management, BellSouth will provide BLC Management with on-line access to intermediate telephone numbers as defined by applicable FCC rules and regulations on a first come first served basis. BLC Management acknowledges that such access to numbers shall be in accordance with the appropriate FCC rules and regulations. BLC Management acknowledges that there may be instances where there is a shortage of telephone numbers in a particular rate center; and in such instances, BellSouth may request that BLC Management return unused intermediate numbers to BellSouth. BLC Management shall return unused intermediate numbers to BellSouth upon BellSouth's request. BellSouth shall make all such requests on a nondiscriminatory basis.

1.3 BellSouth will allow BLC Management to designate up to 100 intermediate telephone numbers per rate center for BLC Management's sole use. Assignment, reservation and use of telephone numbers shall be governed by applicable FCC rules and regulations. BLC Management acknowledges that there may be instances where there is a shortage of telephone numbers in a particular rate center and BellSouth has the right to limit access to blocks of intermediate telephone numbers. These instances include: 1) where jeopardy status has been declared by the North American Numbering Plan (NANP) for a particular Numbering Plan Area (NPA); or 2) where a rate center has less than six months supply of numbering resources.

2. LOCAL SERVICE PROVIDER NUMBER PORTABILITY - PERMANENT SOLUTION (LNP)

2.1 The Parties will offer Number Portability in accordance with rules, regulations and guidelines adopted by the Commission, the FCC and industry fora.

2.2 <u>End User Line Charge</u>. Where BLC Management subscribes to BellSouth's local switching, BellSouth shall bill and BLC Management shall pay the end user line

charge associated with implementing LNP as set forth in BellSouth's FCC Tariff No. 1. This charge is not subject to the resale discount set forth in Attachment 1 of this Agreement.

2.3 To limit service outage, BellSouth and BLC Management will adhere to the process flows and cutover guidelines for porting numbers as outlined in the LNP Reference Guide, as amended from time to time. The LNP Reference Guide, incorporated herein by reference, is accessible via the Internet at the following site: http://www.interconnection.bellsouth.com. All intervals referenced in the LNP Reference Guide shall apply to both BellSouth and BLC Management.

2.4 The Parties will set Location Routing Number (LRN) unconditional or 10-digit triggers where applicable. Where triggers are set, the porting Party will remove the ported number at the same time the trigger is removed.

2.5 A trigger order is a service order issued in advance of the porting of a number. A trigger order 1) initiates call queries to the AIN SS7 network in advance of the number being ported; and 2) provides for the new service provider to be in control of when a number ports.

2.6 Where triggers are not set, the Parties shall coordinate the porting of the number between service providers so as to minimize service interruptions to the End User.

2.7 BellSouth and BLC Management will work cooperatively to implement changes to LNP process flows ordered by the FCC or as recommended by standard industry forums addressing LNP.

3. OPERATIONAL SUPPORT SYSTEM (OSS) RATES

3.1 The terms, conditions and rates for OSS are as set forth in Attachment 2.

Attachment 6

Pre-Ordering, Ordering, Provisioning, Maintenance and Repair

TABLE OF CONTENTS

1. QUALITY OF PRE-ORDERING, ORDERING, PROVISIONING, MAINTENANCE AND REPAIR ... 3

2. ACCESS TO OPERATIONS SUPPORT SYSTEMS 3

3. MISCELLANEOUS 5

PRE-ORDERING, ORDERING, PROVISIONING, MAINTENANCE AND REPAIR

1. QUALITY OF PRE-ORDERING, ORDERING, PROVISIONING, MAINTENANCE AND REPAIR

1.1 BellSouth shall provide to BLC Management nondiscriminatory access to its Operations Support Systems (OSS) and the necessary information contained therein in order that BLC Management can perform the functions of pre-ordering, ordering, provisioning, maintenance and repair, and billing.. BellSouth shall provide BLC Management with all relevant documentation (manuals, user guides, specifications, etc.) regarding business rules and other formatting information as well as practices and procedures necessary to ensure requests are efficiently processed. All documentation will be readily accessible at BellSouth's interconnection website and are incorporated herein by reference. BellSouth shall ensure that its OSS are designed to accommodate access requests for both current and projected demand of BLC Management and other CLECs in the aggregate.

1.2 BellSouth shall provision services during its regular working hours. To the extent BLC Management requests provisioning of service to be performed outside BellSouth's regular working hours, or the work so requested requires BellSouth's technicians or project manager to work outside of regular working hours, overtime charges shall apply. Notwithstanding the foregoing, if such work is performed outside of regular working hours by a BellSouth technician or project manager during his or her scheduled shift and BellSouth does not incur any overtime charges in performing the work on behalf of BLC Management, BellSouth will not assess BLC Management additional charges beyond the rates and charges specified in this Agreement.

2. ACCESS TO OPERATIONS SUPPORT SYSTEMS

2.1 BellSouth shall provide BLC Management nondiscriminatory access to its OSS and the necessary information contained therein in order that BLC Management can perform the functions of pre-ordering, ordering, provisioning, maintenance and repair, and billing. BellSouth shall provide nondiscriminatory access to the OSS through manual and/or electronic interfaces as described in this Attachment. It is the sole responsibility of BLC Management to obtain the technical capability to access and utilize BellSouth's OSS interfaces. Specifications for BLC Management's access and use of BellSouth's electronic interfaces are set forth at BellSouth's interconnection website and are incorporated herein by reference.

2.1.1 <u>Pre-Ordering</u>. BellSouth will provide electronic access to its OSS and the information contained therein in order that BLC Management can perform the following pre-ordering functions: service address validation, telephone number selection, service and feature availability, due date information, customer record

information and loop makeup information. Mechanized access is provided by electronic interfaces whose specifications for access and use are set forth at BellSouth's interconnection website and are incorporated herein by reference. The process by which BellSouth and BLC Management will manage these electronic interfaces to include the development and introduction of new interfaces will be governed by the change management process as described below. BLC Management shall provide to BellSouth access to customer record information, including circuit numbers associated with each telephone number where applicable. BLC Management shall provide such information within four (4) hours after request via electronic access where available. If electronic access is not available, BLC Management shall provide to BellSouth paper copies of customer record information, including circuit numbers associated with each telephone number where applicable. If BellSouth requests the information before noon, the customer record information shall be provided the same day. If BellSouth requests the information after noon, the customer record information shall be provided by noon the following day.

2.1.2 The Parties agree not to view, copy, or otherwise obtain access to the customer record information of any customer without that customer's permission. BLC Management will obtain access to customer record information only in strict compliance with applicable laws, rules, or regulations of the state in which the service is provided. BellSouth reserves the right to audit BLC Management's access to customer record information. If a BellSouth audit of BLC Management's access to customer record information reveals that BLC Management is accessing customer record information without having obtained the proper End User authorization, BellSouth upon reasonable notice to BLC Management may take corrective action, including but not limited to suspending or terminating BLC Management's electronic access to BellSouth's OSS functionality. All such information obtained through an audit shall be deemed Information covered by the Proprietary and Confidential Information section in the General Terms and Conditions of this Agreement.

2.1.3 Ordering. BellSouth will make available to BLC Management electronic interfaces for the purpose of exchanging order information, including order status and completion notification, for non-complex and certain complex resale requests and certain network elements. Specifications for access and use of BellSouth's electronic interfaces are set forth at BellSouth's interconnection website and are incorporated herein by reference. The process by which BellSouth and BLC Management will manage these electronic interfaces to include the development and introduction of new interfaces will be governed by the change management process as described below.

2.1.4 Maintenance and Repair. BellSouth will make available to BLC Management electronic interfaces for the purpose of reporting and monitoring service troubles. Specifications for access and use of BellSouth's maintenance and repair electronic interfaces are set forth at BellSouth's interconnection website and are incorporated herein by reference. The process by which BellSouth and BLC Management will

manage these electronic interfaces to include the development and introduction of new interfaces will be governed by the change management process as described below. Requests for trouble repair are billed in accordance with the provisions of this Agreement. BellSouth and BLC Management agree to adhere to BellSouth's Operational Understanding, as amended from time to time during this Agreement and as incorporated herein by reference. The Operational Understanding may be accessed via BellSouth's interconnection website.

2.1.5 Billing. BellSouth will provide BLC Management nondiscriminatory access to billing information as specified in Attachment 7 to this Agreement.

2.2 Change Management. BellSouth and BLC Management agree that the collaborative change management process known as the Change Control Process (CCP) will be used to manage changes to existing interfaces, introduction of new interfaces and retirement of interfaces. BellSouth and BLC Management agree to comply with the provisions of the documented Change Control Process as may be amended from time to time and incorporated herein by reference. The change management process will cover changes to BellSouth's electronic interfaces, BellSouth's testing environment, associated manual process improvements, and relevant documentation. The process will define a procedure for resolution of change management disputes. Documentation of the CCP as well as related information and processes will be clearly organized and readily accessible to BLC Management at BellSouth's interconnection website.

2.3 Rates. Charges for use of OSS shall be as set forth in this Agreement.

3. MISCELLANEOUS

3.1 Pending Orders. Orders placed in the hold or pending status by BLC Management will be held for a maximum of thirty (30) calendar days from the date the order is placed on hold. After such time, BLC Management shall be required to submit a new service request. Incorrect or invalid requests returned to BLC Management for correction or clarification will be held for thirty (30) calendar days. If BLC Management does not return a corrected request within thirty (30) calendar days, BellSouth will cancel the request.

3.2 Single Point of Contact. BLC Management will be the single point of contact with BellSouth for ordering activity for network elements and other services used by BLC Management to provide services to its End Users, except that BellSouth may accept a request directly from another CLEC, or BellSouth, acting with authorization of the affected End User. BLC Management and BellSouth shall each execute a blanket letter of authorization with respect to customer requests so that prior proof of End User authorization will not be necessary with every request (except in the case of a local service freeze). The Parties shall each be entitled to adopt their own internal processes for verification of customer authorization for requests, provided, however, that such processes shall comply with applicable state and federal law and industry and regulatory guidelines. Pursuant to a request from

another carrier, BellSouth may disconnect any network element being used by BLC Management to provide service to that End User and may reuse such network elements or facilities to enable such other carrier to provide service to the End User. BellSouth will notify BLC Management that such a request has been processed but will not be required to notify BLC Management in advance of such processing.

3.2.1 Neither BellSouth nor BLC Management shall prevent or delay an End User from migrating to another carrier because of unpaid bills, denied service, or contract terms.

3.2.2 BellSouth shall return a Firm Order Confirmation (FOC) and Local Service Request (LSR) rejection/clarification within the intervals in accordance with the Service Quality Measurement (SQM) set forth in Attachment 9 of this Agreement.

3.2.3 BLC Management shall return a FOC to BellSouth within thirty-six (36) hours after BLC Management's receipt from BellSouth of a valid LSR.

3.2.4 BLC Management shall provide a Reject Response to BellSouth within twenty-four (24) hours after BellSouth's submission of an LSR which is incomplete or incorrectly formatted.

3.3 Use of Facilities. When a customer of BLC Management elects to discontinue service and to transfer service to another local exchange carrier, including BellSouth, BellSouth shall have the right to reuse the facilities provided to BLC Management by BellSouth. In addition, where BellSouth provides local switching, BellSouth may disconnect and reuse facilities when the facility is in a denied state and BellSouth has received a request to establish new service or transfer of service from a customer or a customer's CLEC at the same address served by the denied facility. BellSouth will notify BLC Management that such a request has been processed after the disconnect order has been completed.

3.4 Contact Numbers. The Parties agree to provide one another with toll-free nation-wide (50 states) contact numbers for the purpose of ordering, provisioning and maintenance of services.

3.5 Subscription Functions. In cases where BellSouth performs subscription functions for an interexchange carrier (IXC) (i.e. PIC and LPIC changes via Customer Account Record Exchange (CARE)), BellSouth will in all possible instances provide the affected IXCs with the Operating Company Number (OCN) of the local provider for the purpose of obtaining End User billing account and other End User information required under subscription requirements.

3.5.1 When BLC Management's End User, served by resale or loop and port combinations, changes its PIC or LPIC, and per BellSouth's FCC or state tariff the interexchange carrier elects to charge the End User the PIC or LPIC change charge, BellSouth will bill the PIC or LPIC change charge to BLC Management,

which has the billing relationship with that End User, and BLC Management may pass such charge to the End User.

3.6 Cancellation Charges. If BLC Management cancels a request for network elements or resold services, any costs incurred by BellSouth in conjunction with the provisioning of that request will be recovered in accordance with BellSouth's Private Line Tariff or BellSouth's FCC No. 1 Tariff, Section 5.4, as applicable. Notwithstanding the foregoing, if BLC Management places an LSR based upon BellSouth's loop makeup information, and such information is inaccurate resulting in the inability of BellSouth to provision the network elements requested and another spare compatible facility cannot be found with the transmission characteristics of the network elements originally requested, cancellation charges described in this Section shall not apply. Where BLC Management places a single LSR for multiple network elements or services based upon loop makeup information, and information as to some, but not all, of the network elements or services is inaccurate, if BellSouth cannot provision the network elements or services that were the subject of the inaccurate loop makeup information, BLC Management may cancel its request for those network elements or services without incurring cancellation charges as described in this Section. In such instance, should BLC Management elect to cancel the entire LSR, cancellation charges as described in this Section shall apply to those elements and services that were not the subject of inaccurate loop makeup.

3.7 Service Date Advancement Charges (a.k.a. Expedites). For Service Date Advancement requests by BLC Management, Service Date Advancement charges will apply for intervals less than the standard interval as outlined in the BellSouth Product and Services Interval Guide. The charges as outlined in BellSouth's FCC No. 1 Tariff, Section 5, will apply as applicable.

Attachment 7

Billing

TABLE OF CONTENTS

1. PAYMENT AND BILLING ARRANGEMENTS 3

2. BILLING DISPUTES 7

3. RAO HOSTING 8

4. OPTIONAL DAILY USAGE FILE 11

5. ACCESS DAILY USAGE FILE 14

6. ENHANCED OPTIONAL DAILY USAGE FILE (EODUF) 16

Rates……Exhibit A

BILLING

1. PAYMENT AND BILLING ARRANGEMENTS

The terms and conditions set forth in this Attachment shall apply to all services ordered and provisioned pursuant to this Agreement.

1.1 Billing. BellSouth will bill through the Carrier Access Billing System (CABS), Integrated Billing System (IBS) and/or the Customer Records Information System (CRIS) depending on the particular service(s) provided to BLC Management under this Agreement. BellSouth will format all bills in Carrier Billing Output Specification (CBOS) Standard or CLUB/EDI format, depending on the type of service provided. For those services where standards have not yet been developed, BellSouth's billing format will change as necessary when standards are finalized by the applicable industry forum.

1.1.1 For any service(s) BellSouth receives from BLC Management, BLC Management shall bill BellSouth in CBOS format.

1.1.2 Any switched access charges associated with interexchange carrier access to the resold local exchange lines will be billed by, and due to BellSouth.

1.1.3 BellSouth will render bills each month on established bill days for each of BLC Management's accounts. If either Party requests multiple billing media or additional copies of the bills, the billing Party will provide these at a reasonable cost.

1.1.4 BellSouth will bill BLC Management in advance for all services to be provided during the ensuing billing period except charges associated with service usage and nonrecurring charges, which will be billed in arrears.

1.1.4.1 Charges for services will be calculated on an individual End User account level, including, if applicable, any charge for usage or usage allowances. BellSouth will also bill BLC Management, and BLC Management will be responsible for and remit to BellSouth, all charges applicable to said services including but not limited to 911 and E911 charges, End Users common line charges, federal subscriber line charges, telecommunications relay charges (TRS), and franchise fees, unless otherwise ordered by a Commission.

1.1.5 BellSouth will not perform billing and collection services for BLC Management as a result of the execution of this Agreement.

1.1.6 In the event that this Agreement or an amendment to this Agreement effects a rate change to recurring rate elements that are billed in advance, BellSouth will make an adjustment to such recurring rates billed in advance at the previously effective rate. The adjustment shall reflect billing at the new rates from the Effective Date of the Agreement or amendment.

1.2 Establishing Accounts. After submitting a credit profile and deposit, if required, and after receiving certification as a local exchange carrier from the appropriate regulatory agency, BLC Management will provide the appropriate BellSouth advisory team/local contract manager the necessary documentation to enable BellSouth to establish accounts for Local Interconnection, Network Elements and Other Services, Collocation and/or resold services. Such documentation shall include the Application for Master Account, if applicable, proof of authority to provide telecommunications services, the appropriate Operating Company Numbers (OCN) for each state as assigned by the National Exchange Carriers Association (NECA), Carrier Identification Code (CIC), Access Customer Name and Abbreviation (ACNA), Blanket Letter of Authorization (LOA), Misdirected Number form, and a tax exemption certificate, if applicable. Notwithstanding anything to the contrary in this Agreement, BLC Management may not order services under a new account established in accordance with this Section 1.2 until 30 days after all information specified in this Section 1.2 is received from BLC Management.

1.2.1 OCN. If BLC Management needs to change its OCN(s) under which it operates when BLC Management has already been conducting business utilizing those OCN(s), BLC Management shall bear all costs incurred by BellSouth to convert BLC Management to the new OCN(s). OCN conversion charges include all time required to make system updates to all of BLC Management's End User customer records and will be handled by the BFR/NBR process.

1.2.2 Payment Responsibility. Payment of all charges will be the responsibility of BLC Management. BLC Management shall make payment to BellSouth for all services billed. Payments made by BLC Management to BellSouth as payment on account will be credited to BLC Management's accounts receivable master account. BellSouth will not become involved in billing disputes that may arise between BLC Management and BLC Management's customer.

1.3 Payment Due. Payment for services provided is due on or before the next bill date in immediately available funds. Payment is considered to have been made when received by BellSouth.

1.4 Due Dates. If the payment due date falls on a Sunday or on a holiday that is observed on a Monday, the payment due date shall be the first non-holiday day following such Sunday or holiday. If the payment due date falls on a Saturday or on a holiday which is observed on Tuesday, Wednesday, Thursday, or Friday, the payment due date shall be the last non-holiday day preceding such Saturday or holiday. If payment is not received by the payment due date, a late payment charge, as set forth in Section 1.6, below, shall apply.

1.5 Tax Exemption. Upon BellSouth's receipt of tax exemption certificate, the total amount billed to BLC Management will not include those taxes or fees from which BLC Management is exempt. BLC Management will be solely responsible for the

computation, tracking, reporting and payment of all taxes and like fees associated with the services provided to the End User of BLC Management.

1.6 Late Payment. If any portion of the payment is not received by BellSouth on or before the payment due date as set forth preceding, or if any portion of the payment is received by BellSouth in funds that are not immediately available to BellSouth, then a late payment charge shall be due to BellSouth. The late payment charge shall be the portion of the payment not received by the payment due date multiplied by a late factor and will be applied on a per bill basis. The late factor shall be as set forth in Section A2 of the General Subscriber Services Tariff, Section B2 of the Private Line Service Tariff or Section E2 of the Intrastate Access Tariff, as appropriate. In addition to any applicable late payment charges, BLC Management may be charged a fee for all returned checks as set forth in Section A2 of the General Subscriber Services Tariff or pursuant to the applicable state law.

1.7 Discontinuing Service to BLC Management. The procedures for discontinuing service to BLC Management are as follows:

1.7.1 BellSouth reserves the right to suspend or terminate service in the event of prohibited, unlawful or improper use of BellSouth facilities or service, abuse of BellSouth facilities, or any other violation or noncompliance by BLC Management of the rules and regulations of BellSouth's tariffs.

1.7.2 BellSouth reserves the right to suspend or terminate service for nonpayment. If payment of amounts not subject to a billing dispute, as described in Section 2, is not received by the bill date in the month after the original bill date, BellSouth will provide written notice to BLC Management that additional applications for service may be refused, that any pending orders for service may not be completed, and/or that access to ordering systems may be suspended if payment of such amounts, and all other amounts not in dispute that become past due before refusal, incompletion or suspension, is not received by the fifteenth day following the date of the notice. In addition, BellSouth may, at the same time, provide written notice to the person designated by BLC Management to receive notices of noncompliance that BellSouth may discontinue the provision of existing services to BLC Management if payment of such amounts, and all other amounts not in dispute that become past due before discontinuance, is not received by the thirtieth day following the date of the initial notice.

1.7.3 In the case of discontinuance of services, all billed charges, as well as applicable termination charges, shall become due.

1.7.4 Discontinuance of service on BLC Management's account will effect a discontinuance of service to BLC Management's End Users. BellSouth will reestablish service for BLC Management upon payment of all past due charges and the appropriate connection fee subject to BellSouth's normal application

procedures. BLC Management is solely responsible for notifying the End User of the discontinuance of the service. If within fifteen (15) days after BLC Management's service has been discontinued and no arrangements to reestablish service have been made consistent with this subsection, BLC Management's service will be disconnected.

1.8 Deposit Policy. BLC Management shall complete the BellSouth Credit Profile and provide information to BellSouth regarding credit worthiness. Based on the results of the credit analysis, BellSouth reserves the right to secure the account with a suitable form of security deposit. Such security deposit shall take the form of cash, an Irrevocable Letter of Credit (BellSouth form), Surety Bond (BellSouth form) or, in BellSouth's sole discretion, some other form of security proposed by BLC Management. Any such security deposit shall in no way release BLC Management from its obligation to make complete and timely payments of its bill. BLC Management shall pay any applicable deposits prior to the inauguration of service. If, in the sole opinion of BellSouth, circumstances so warrant and/or gross monthly billing has increased beyond the level initially used to determine the level of security deposit, BellSouth reserves the right to request additional security and/or file a Uniform Commercial Code (UCC-1) security interest in BLC Management's "accounts receivables and proceeds." Interest on a security deposit, if provided in cash, shall accrue and be paid in accordance with the terms in the appropriate BellSouth tariff. Security deposits collected under this Section shall not exceed two months' estimated billing. In the event BLC Management fails to remit to BellSouth any deposit requested pursuant to this Section, service to BLC Management may be terminated in accordance with the terms of Section 1.7 of this Attachment, and any security deposits will be applied to BLC Management's account(s). In the event BLC Management defaults on its account, service to BLC Management will be terminated in accordance with the terms of Section 1.7 above, and any security deposits will be applied to BLC Management's account.

1.9 Notices. Notwithstanding anything to the contrary in this Agreement, all bills and notices regarding billing matters, including notices relating to security deposits, disconnection of services for nonpayment of charges, and rejection of additional orders from BLC Management, shall be forwarded to the individual and/or address provided by BLC Management in establishment of its billing account(s) with BellSouth, or to the individual and/or address subsequently provided by BLC Management as the contact for billing information. All monthly bills and notices described in this Section shall be forwarded to the same individual and/or address; provided, however, upon written request from BLC Management to BellSouth's billing organization, the notice of discontinuance of services purchased by BLC Management under this Agreement provided for in Section 1.7.2 of this Attachment shall be sent via certified mail to the individual(s) listed in the Notices provision of the General Terms and Conditions of this Agreement.

1.10 Rates. Rates for Optional Daily Usage File (ODUF), Access Daily Usage File (ADUF), Enhanced Optional Daily Usage File (EODUF) and Centralized Message Distribution Service (CMDS) are set out in Exhibit A to this Attachment. If no rate is identified in this Attachment, the rate for the specific service or function will be as set forth in the applicable BellSouth tariff or as negotiated by the Parties upon request by either Party.

2. BILLING DISPUTES

2.1 Each Party agrees to notify the other Party in writing upon the discovery of a billing dispute. BLC Management shall report all billing disputes to BellSouth using the Billing Adjustment Request Form (RF 1461) provided by BellSouth. In the event of a billing dispute, the Parties will endeavor to resolve the dispute within sixty (60) calendar days of the notification date. If the Parties are unable within the 60 day period to reach resolution, then the aggrieved Party may pursue dispute resolution in accordance with the General Terms and Conditions of this Agreement.

2.2 For purposes of this Section 2, a billing dispute means a reported dispute of a specific amount of money actually billed by either Party. The dispute must be clearly explained by the disputing Party and supported by written documentation, which clearly shows the basis for disputing charges. A billing dispute will not include the refusal to pay all or part of a bill or bills when no written documentation is provided to support the dispute, nor shall a billing dispute include the refusal to pay other amounts owed by the billed Party until the dispute is resolved. Claims by the billed Party for damages of any kind will not be considered a billing dispute for purposes of this Section. If the billing dispute is resolved in favor of the billing Party, the disputing Party will make immediate payment of any of the disputed amount owed to the billing Party or the billing Party shall have the right to pursue normal treatment procedures. Any credits due to the disputing Party, pursuant to the billing dispute, will be applied to the disputing Party's account by the billing Party immediately upon resolution of the dispute.

2.3 If a Party disputes a charge and does not pay such charge by the payment due date, or if a payment or any portion of a payment is received by either Party after the payment due date, or if a payment or any portion of a payment is received in funds which are not immediately available to the other Party, then a late payment charge and interest, where applicable, shall be assessed. For bills rendered by either Party for payment, the late payment charge for both Parties shall be calculated based on the portion of the payment not received by the payment due date multiplied by the late factor as set forth in the following BellSouth tariffs: for services purchased from the General Subscribers Services Tariff for purposes of resale and for ports and non-designed loops, Section A2 of the General Subscriber Services Tariff; for services purchased from the Private Line Tariff for purposes of resale, Section B2 of the Private Line Service Tariff; and for designed network elements and other

services and local interconnection charges, Section E2 of the Access Service Tariff. The Parties shall assess interest on previously assessed late payment charges only in a state where it has the authority pursuant to its tariffs.

3. RAO HOSTING

3.1 RAO Hosting, Calling Card and Third Number Settlement System (CATS) and Non-Intercompany Settlement System (NICS) services provided to BLC Management by BellSouth will be in accordance with the methods and practices regularly applied by BellSouth to its own operations during the term of this Agreement, including such revisions as may be made from time to time by BellSouth.

3.2 BLC Management shall furnish all relevant information required by BellSouth for the provision of RAO Hosting, CATS and NICS.

3.3 Charges or credits, as applicable, will be applied by BellSouth to BLC Management on a monthly basis in arrears. Amounts due (excluding adjustments) are payable within thirty (30) days of receipt of the billing statement.

3.4 BLC Management must have its own unique hosted RAO code. Where BellSouth is the selected CMDS interfacing host, BLC Management must request that BellSouth establish a unique hosted RAO code for BLC Management. Such request shall be in writing to the BellSouth RAO Hosting coordinator and must be submitted at least eight (8) weeks prior to provision of services pursuant to this Section. Services shall commence on a date mutually agreed by the Parties.

3.5 BellSouth will receive messages from BLC Management that are to be processed by BellSouth, another LEC in the BellSouth region or a LEC outside the BellSouth region. BLC Management shall send all messages to BellSouth no later than sixty (60) days after the message date.

3.6 BellSouth will perform invoice sequence checking, standard EMI format editing, and balancing of message data with the EMI trailer record counts on all data received from BLC Management.

3.7 All data received from BLC Management that is to be processed or billed by another LEC within the BellSouth region will be distributed to that LEC in accordance with the Agreement(s) in effect between BellSouth and the involved LEC.

3.8 All data received from BLC Management that is to be placed on the CMDS network for distribution outside the BellSouth region will be handled in accordance with the agreement(s) in effect between BellSouth and its connecting contractor.

3.9 BellSouth will receive messages from the CMDS network that are destined to be processed by BLC Management and will forward them to BLC Management on a daily basis for processing.

3.10 Transmission of message data between BellSouth and BLC Management will be via CONNECT:Direct or Secure File Transfer Protocol (FTP).

3.10.1 Data circuits (private line or dial-up) will be required between BellSouth and BLC Management for the purpose of data transmission when utilizing CONNECT:Direct. Where a dedicated line is required, BLC Management will be responsible for ordering the circuit and coordinating the installation with BellSouth. BLC Management is responsible for any charges associated with this line. Equipment required on the BellSouth end to attach the line to the mainframe computer and to transmit data will be negotiated on an individual case basis. Where a dial-up facility is required, dial circuits will be installed in the BellSouth data center by BellSouth and the associated charges assessed to BLC Management. Additionally, all message toll charges associated with the use of the dial circuit by BLC Management will be the responsibility of BLC Management. Associated equipment on the BellSouth end, including a modem, will be negotiated on an individual case basis between the Parties. All equipment, including modems and software, that is required on the BLC Management end for the purpose of data transmission will be the responsibility of BLC Management.

3.10.2 If BLC Management utilizes Secure File Transfer Protocol for data file transmission, purchase of the Secure File Transfer Protocol software will be the responsibility of BLC Management.

3.11 All messages and related data exchanged between BellSouth and BLC Management will be formatted for EMI formatted records and packed between appropriate EMI header and trailer records in accordance with accepted industry standards.

3.12 BLC Management will maintain recorded message detail necessary to recreate files provided to BellSouth for a period of three (3) calendar months beyond the related message dates.

3.13 Should it become necessary for BLC Management to send data to BellSouth more than sixty (60) days past the message date(s), BLC Management will notify BellSouth in advance of the transmission of the data. BellSouth will work with its connecting contractor and/or BLC Management, where necessary, to notify all affected LECs.

3.14 In the event that data to be exchanged between the two Parties should become lost or destroyed, the Party responsible for creating the data will make every effort to restore and retransmit such data. If the data cannot be retrieved, the Party

responsible for losing or destroying the data will be liable to the other Party for any resulting lost revenue. Lost revenue may be a combination of revenues that could not be billed to the End Users and associated access revenues. Both Parties will work together to estimate the revenue amount based upon historical data through a method mutually agreed upon. The resulting estimated revenue loss will be paid by the responsible Party to the other Party within three (3) calendar months of the resolution of the amount owed, or as mutually agreed upon by the Parties.

3.15 Should an error be detected by the EMI format edits performed by BellSouth on data received from BLC Management, the entire pack containing the affected data will not be processed by BellSouth. BellSouth will notify BLC Management of the error. BLC Management will correct the error(s) and will resend the entire pack to BellSouth for processing. In the event that an out-of-sequence condition occurs on subsequent packs, BLC Management will resend these packs to BellSouth after the pack containing the error has been successfully reprocessed by BellSouth.

3.16 In association with message distribution service, BellSouth will provide BLC Management with associated intercompany settlements reports (CATS and NICS) as appropriate.

3.17 Notwithstanding anything in this Agreement to the contrary, in no case shall either Party be liable to the other for any direct or consequential damages incurred as a result of the obligations set out in this Section 3.

3.18 Intercompany Settlements Messages

3.18.1 Intercompany Settlements Messages facilitate the settlement of revenues associated with traffic originated from or billed by BLC Management as a facilities based provider of local exchange telecommunications services outside the BellSouth region. Only traffic that originates in one Bell operating territory and bills in another Bell operating territory is included. Traffic that originates and bills within the same Bell operating territory will be settled on a local basis between BLC Management and the involved company(ies), unless that company is participating in NICS.

3.18.2 Both traffic that originates outside the BellSouth region by BLC Management and is billed within the BellSouth region, and traffic that originates within the BellSouth region and is billed outside the BellSouth region by BLC Management, is covered by CATS. Also covered is traffic that either is originated by or billed by BLC Management, involves a company other than BLC Management, qualifies for inclusion in the CATS settlement, and is not originated or billed within the BellSouth region (NICS).

3.18.3 Once BLC Management is operating within the BellSouth territory, revenues associated with calls originated and billed within the BellSouth region will be settled via NICS.

3.18.4 BellSouth will receive the monthly NICS reports from Telcordia on behalf of BLC Management. BellSouth will distribute copies of these reports to BLC Management on a monthly basis.

3.18.5 BellSouth will receive the monthly CATS reports from Telcordia on behalf of BLC Management. BellSouth will distribute copies of these reports to BLC Management on a monthly basis.

3.18.6 BellSouth will collect the revenue earned by BLC Management from the Bell operating company in whose territory the messages are billed via CATS, less a per message billing and collection fee of five cents ($0.05), on behalf of BLC Management. BellSouth will remit the revenue billed by BLC Management to the Bell operating company in whose territory the messages originated, less a per message billing and collection fee of five cents ($0.05), on behalf on BLC Management. These two amounts will be netted together by BellSouth and the resulting charge or credit issued to BLC Management via a monthly Carrier Access Billing System (CABS) miscellaneous bill.

3.18.7 BellSouth will collect the revenue earned by BLC Management within the BellSouth territory from another CLEC also within the BellSouth territory (NICS) where the messages are billed, less a per message billing and collection fee of five cents ($0.05), on behalf of BLC Management. BellSouth will remit the revenue billed by BLC Management within the BellSouth region to the CLEC also within the BellSouth region, where the messages originated, less a per message billing and collection fee of five cents ($0.05). These two amounts will be netted together by BellSouth and the resulting charge or credit issued to BLC Management via a monthly CABS miscellaneous bill.

3.18.8 BellSouth and BLC Management agree that monthly netted amounts of less than fifty dollars ($50.00) will not be settled.

4. OPTIONAL DAILY USAGE FILE

4.1 Upon written request from BLC Management, BellSouth will provide the Optional Daily Usage File (ODUF) service to BLC Management pursuant to the terms and conditions set forth in this section.

4.2 BLC Management shall furnish all relevant information required by BellSouth for the provision of the ODUF.

4.3 The ODUF feed will contain billable messages that were carried over the BellSouth Network and processed in the BellSouth Billing System, but billed to a BLC Management customer.

4.4 Charges for the ODUF will appear on BLC Managements' monthly bills for the previous month's usage. The charges are as set forth in Exhibit A to this

Attachment. BLC Management will be billed at the ODUF rates that are in effect at the end of the previous month.

4.5 The ODUF feed will contain both rated and unrated messages. All messages will be in the standard Alliance for Telecommunications Industry Solutions (ATIS) EMI record format.

4.6 Messages that error in the billing system of BLC Management will be the responsibility of BLC Management. If, however, BLC Management should encounter significant volumes of errored messages that prevent processing by BLC Management within its systems, BellSouth will work with BLC Management to determine the source of the errors and the appropriate resolution.

4.7 The following specifications shall apply to the ODUF feed.

4.7.1 ODUF Messages to be Transmitted

4.7.1.1 The following messages recorded by BellSouth will be transmitted to BLC Management:

4.7.1.1.1 Message recording for per use/per activation type services (examples: Three -Way Calling, Verify, Interrupt, Call Return, etc.)

4.7.1.1.2 Measured billable Local

4.7.1.1.3 Directory Assistance messages

4.7.1.1.4 IntraLATA Toll

4.7.1.1.5 WATS and 800 Service

4.7.1.1.6 N11

4.7.1.1.7 Information Service Provider Messages

4.7.1.1.8 Operator Services Messages

4.7.1.1.9 Operator Services Message Attempted Calls (Network Element only)

4.7.1.1.10 Credit/Cancel Records

4.7.1.1.11 Usage for Voice Mail Message Service

4.7.1.2 Rated Incollects (messages BellSouth receives from other revenue accounting offices) can also be on ODUF. Rated Incollects will be intermingled with BellSouth recorded rated and unrated usage. Rated Incollects will not be packed separately.

4.7.1.3 BellSouth will perform duplicate record checks on records processed to ODUF. Any duplicate messages detected will be deleted and not sent to BLC Management.

4.7.1.4 In the event that BLC Management detects a duplicate on ODUF they receive from BellSouth, BLC Management will drop the duplicate message and will not return the duplicate to BellSouth.

4.7.2 ODUF Physical File Characteristics

4.7.2.1 ODUF will be distributed to BLC Management via CONNECT:Direct, Secure File Transfer Protocol (FTP) or another mutually agreed medium. The ODUF feed will be a variable block format. The data on the ODUF feed will be in a non-compacted EMI format (175 byte format plus modules). It will be created on a daily basis Monday through Friday except holidays. Details such as dataset name and delivery schedule will be addressed during negotiations of the distribution medium. There will be a maximum of one dataset per workday per OCN.

4.7.2.2 Data circuits (private line or dial-up) will be required between BellSouth and BLC Management for the purpose of data transmission as set forth in Section 3.10.1 above.

4.7.2.3 If BLC Management utilizes Secure File Transfer Protocol (FTP) for data file transmission, purchase of the Secure File Transfer Protocol (FTP) software will be the responsibility of BLC Management.

4.7.3 ODUF Packing Specifications

4.7.3.1 A pack will contain a minimum of one message record or a maximum of 99,999 message records plus a pack header record and a pack trailer record. One transmission can contain a maximum of 99 packs and a minimum of one pack.

4.7.3.2 The OCN, From RAO, and Invoice Number will control the invoice sequencing. The From RAO will be used to identify to BLC Management which BellSouth RAO that is sending the message. BellSouth and BLC Management will use the invoice sequencing to control data exchange. BellSouth will be notified of sequence failures identified by BLC Management and resend the data as appropriate.

The data will be packed using ATIS EMI records.

4.7.4 ODUF Pack Rejection

4.7.4.1 BLC Management will notify BellSouth within one business day of rejected packs (via the mutually agreed medium). Packs could be rejected because of pack sequencing discrepancies or a critical edit failure on the Pack Header or Pack Trailer records (i.e. out-of-balance condition on grand totals, invalid data populated). Standard ATIS EMI error codes will be used. BLC Management will

not be required to return the actual rejected data to BellSouth. Rejected packs will be corrected and retransmitted to BLC Management by BellSouth.

4.7.5 ODUF Control Data

4.7.5.1 BLC Management will send one confirmation record per pack that is received from BellSouth. This confirmation record will indicate BLC Management's receipt of the pack and acceptance or rejection of the pack. Pack Status Code(s) will be populated using standard ATIS EMI error codes for packs that were rejected by BLC Management for reasons stated in the above section.

4.7.6 ODUF Testing

4.7.6.1 Upon request from BLC Management, BellSouth shall send ODUF test files to BLC Management. The Parties agree to review and discuss the ODUF content and/or format. For testing of usage results, BellSouth shall request that BLC Management set up a production (live) file. The live test may consist of BLC Management's employees making test calls for the types of services BLC Management requests on ODUF. These test calls are logged by BLC Management, and the logs are provided to BellSouth. These logs will be used to verify the files. Testing will be completed within 30 calendar days from the date on which the initial test file was sent.

5. ACCESS DAILY USAGE FILE

5.1 Upon written request from BLC Management, BellSouth will provide the Access Daily Usage File (ADUF) service to BLC Management pursuant to the terms and conditions set forth in this section.

5.2 BLC Management shall furnish all relevant information required by BellSouth for the provision of ADUF.

5.3 ADUF will contain access messages associated with a port that BLC Management has purchased from BellSouth

5.4 Charges for ADUF will appear on BLC Management's monthly bills for the previous month's usage. The charges are as set forth in Exhibit A to this Attachment. BLC Management will be billed at the ADUF rates that are in effect at the end of the previous month.

5.5 Messages that error in the billing system of BLC Management will be the responsibility of BLC Management. If, however, BLC Management should encounter significant volumes of errored messages that prevent processing by BLC Management within its systems, BellSouth will work with BLC Management to determine the source of the errors and the appropriate resolution.

5.6 ADUF Messages To Be Transmitted

5.6.1 The following messages recorded by BellSouth will be transmitted to BLC Management:

5.6.1.1 Recorded originating and terminating interstate and intrastate access records associated with a port.

5.6.1.2 Recorded terminating access records for undetermined jurisdiction access records associated with a port.

5.6.2 BellSouth will perform duplicate record checks on records processed to ADUF. Any duplicate messages detected will be dropped and not sent to BLC Management.

5.6.3 In the event that BLC Management detects a duplicate on ADUF they receive from BellSouth, BLC Management will drop the duplicate message and will not return the duplicate to BellSouth.

5.6.4 ADUF Physical File Characteristics

5.6.4.1 ADUF will be distributed to BLC Management via CONNECT:Direct, Secure File Transfer Protocol (FTP) or another mutually agreed medium. The ADUF feed will be a fixed block format. The data on the ADUF feed will be in a non-compacted EMI format (210 byte). It will be created on a daily basis Monday through Friday except holidays. Details such as dataset name and delivery schedule will be addressed during negotiations of the distribution medium. There will be a maximum of one dataset per workday per OCN.

5.6.4.2 Data circuits (private line or dial-up) will be required between BellSouth and BLC Management for the purpose of data transmission as set forth in Section 3.10.1 above.

5.6.4.3 If BLC Management utilizes Secure File Transfer Protocol (FTP) for data file transmission, purchase of the Secure File Transfer Protocol (FTP) software will be the responsibility of BLC Management.

5.6.5 ADUF Packing Specifications

5.6.5.1 A pack will contain a minimum of one message record or a maximum of 99,999 message records plus a pack header record and a pack trailer record. One transmission can contain a maximum of 99 packs and a minimum of one pack.

5.6.5.2 The OCN, From RAO, and Invoice Number will control the invoice sequencing. The From RAO will be used to identify to BLC Management which BellSouth RAO is sending the message. BellSouth and BLC Management will use the invoice sequencing to control data exchange. BellSouth will be notified of sequence failures identified by BLC Management and resend the data as appropriate.

The data will be packed using ATIS EMI records.

5.6.6 ADUF Pack Rejection

5.6.6.1 BLC Management will notify BellSouth within one business day of rejected packs (via the mutually agreed medium). Packs could be rejected because of pack sequencing discrepancies or a critical edit failure on the Pack Header or Pack Trailer records (i.e. out-of-balance condition on grand totals, invalid data populated). Standard ATIS EMI error codes will be used. BLC Management will not be required to return the actual rejected data to BellSouth. Rejected packs will be corrected and retransmitted to BLC Management by BellSouth.

5.6.7 ADUF Control Data

5.6.7.1 BLC Management will send one confirmation record per pack that is received from BellSouth. This confirmation record will indicate BLC Management's receipt of the pack and acceptance or rejection of the pack. Pack Status Code(s) will be populated using standard ATIS EMI error codes for packs that were rejected by BLC Management for reasons stated in the above section.

5.6.8 ADUF Testing

5.6.8.1 Upon request from BLC Management, BellSouth shall send a test file of generic data to BLC Management via Connect:Direct or Text File via E-Mail. The Parties agree to review and discuss the test file's content and/or format.

6. ENHANCED OPTIONAL DAILY USAGE FILE (EODUF)

6.1 Upon written request from BLC Management, BellSouth will provide the Enhanced Optional Daily Usage File (EODUF) service to BLC Management pursuant to the terms and conditions set forth in this section. EODUF will only be sent to existing ODUF subscribers who request the EODUF option.

6.2 BLC Management shall furnish all relevant information required by BellSouth for the provision of the Enhanced Optional Daily Usage File.

6.3 The Enhanced Optional Daily Usage File (EODUF) will provide usage data for local calls originating from resold Flat Rate Business and Residential Lines.

6.4 Charges for delivery of the Enhanced Optional Daily Usage File will appear on BLC Management's monthly bills for the previous month's usage. The charges are as set forth in Exhibit A to this Attachment. BLC Management will be billed at the EODUF rates that are in effect at the end of the previous month.

6.5 All messages will be in the standard Alliance for Telecommunications Industry Solutions (ATIS) EMI record format.

6.6 Messages that error in the billing system of BLC Management will be the responsibility of BLC Management. If, however, BLC Management should encounter significant volumes of errored messages that prevent processing by BLC Management within its systems, BellSouth will work with BLC Management to determine the source of the errors and the appropriate resolution.

6.7 The following specifications shall apply to the EODUF feed.

6.7.1 Usage To Be Transmitted

6.7.1.1 The following messages recorded by BellSouth will be transmitted to BLC Management:

6.7.1.1.1 Customer usage data for flat rated local call originating from BLC Management's End User lines (1FB or 1FR). The EODUF record for flat rate messages will include:

6.7.1.1.2 Date of Call

6.7.1.1.3 From Number

6.7.1.1.4 To Number

6.7.1.1.5 Connect Time

6.7.1.1.6 Conversation Time

6.7.1.1.7 Method of Recording

6.7.1.1.8 From RAO

6.7.1.1.9 Rate Class

6.7.1.1.10 Message Type

6.7.1.1.11 Billing Indicators

6.7.1.1.12 Bill to Number

6.7.1.2 BellSouth will perform duplicate record checks on EODUF records processed to Optional Daily Usage File. Any duplicate messages detected will be deleted and not sent to BLC Management.

6.7.1.3 In the event that BLC Management detects a duplicate on Enhanced Optional Daily Usage File they receive from BellSouth, BLC Management will drop the duplicate message (BLC Management will not return the duplicate to BellSouth).

6.7.2 Physical File Characteristics

6.7.2.1 The EODUF feed will be distributed to BLC Management over their existing Optional Daily Usage File (ODUF) feed. The EODUF messages will be intermingled among BLC Management's Optional Daily Usage File (ODUF) messages. The EODUF will be a variable block format (2476) with an LRECL of 2472. The data on the EODUF will be in a non-compacted EMI format (175 byte format plus modules). It will be created on a daily basis (Monday through Friday except holidays).

6.7.2.2 Data circuits (private line or dial-up) may be required between BellSouth and BLC Management for the purpose of data transmission. Where a dedicated line is required, BLC Management will be responsible for ordering the circuit, overseeing its installation and coordinating the installation with BellSouth. BLC Management will also be responsible for any charges associated with this line. Equipment required on the BellSouth end to attach the line to the mainframe computer and to transmit successfully ongoing will be negotiated on an individual case basis. Where a dial-up facility is required, dial circuits will be installed in the BellSouth data center by BellSouth and the associated charges assessed to BLC Management. Additionally, all message toll charges associated with the use of the dial circuit by BLC Management will be the responsibility of BLC Management. Associated equipment on the BellSouth end, including a modem, will be negotiated on an individual case basis between the Parties. All equipment, including modems and software, that is required on BLC Management's end for the purpose of data transmission will be the responsibility of BLC Management.

6.7.3 Packing Specifications

6.7.3.1 A pack will contain a minimum of one message record or a maximum of 99,999 message records plus a pack header record and a pack trailer record. One transmission can contain a maximum of 99 packs and a minimum of one pack.

6.7.3.2 The Operating Company Number (OCN), From Revenue Accounting Office (RAO), and Invoice Number will control the invoice sequencing. The From RAO will be used to identify to BLC Management which BellSouth RAO is sending the message. BellSouth and BLC Management will use the invoice sequencing to control data exchange. BellSouth will be notified of sequence failures identified by BLC Management and resend the data as appropriate.

6.7.3.3 The data will be packed using ATIS EMI records.

ODUF/ADUF/CMDS - Alabama														Attachment: 7		Exhibit: A	
CATEGORY		RATE ELEMENTS	Interim	Zone	BCS	USOC	RATES ($)					Svc Order Submitted Elec per LSR	Svc Order Submitted Manually per LSR	Incremental Charge - Manual Svc Order vs. Electronic-1st	Incremental Charge - Manual Svc Order vs. Electronic-Add'l	Incremental Charge - Manual Svc Order vs. Electronic-Disc 1st	Incremental Charge - Manual Svc Order vs. Electronic-Disc Add'l
							Rec	Nonrecurring		Nonrecurring Disconnect		OSS Rates ($)					
								First	Add'l	First	Add'l	SOMEC	SOMAN	SOMAN	SOMAN	SOMAN	SOMAN
ODUF/ADUF/CMDS																	
	ACCESS DAILY USAGE FILE (ADUF)																
		ADUF: Message Processing, per message					0.007037										
		ADUF: Data Transmission (CONNECT:DIRECT), per message					0.000113										
	OPTIONAL DAILY USAGE FILE (ODUF)																
		ODUF: Recording, per message					0.000011										
		ODUF: Message Processing, per message					0.004101										
		ODUF: Message Processing, per Magnetic Tape provisioned					42.67										
		ODUF: Data Transmission (CONNECT:DIRECT), per message					0.000094										
	CENTRALIZED MESSAGE DISTRIBUTION SERVICE (CMDS)																
		CMDS: Message Processing, per message					0.004										
		CMDS: Data Transmission (CONNECT:DIRECT), per message					0.001										
	Notes: If no rate is identified in the contract, the rate for the specific service or function will be as set forth in applicable BellSouth tariff or as negotiated by the Parties upon request by either Party.																

ODUF/ADUF/CMDS - Florida														Attachment: 7		Exhibit: A	
CATEGORY		RATE ELEMENTS	Interim	Zone	BCS	USOC	RATES ($)					Svc Order Submitted Elec per LSR	Svc Order Submitted Manually per LSR	Incremental Charge - Manual Svc Order vs. Electronic-1st	Incremental Charge - Manual Svc Order vs. Electronic-Add'l	Incremental Charge - Manual Svc Order vs. Electronic-Disc 1st	Incremental Charge - Manual Svc Order vs. Electronic-Disc Add'l
							Rec	Nonrecurring		Nonrecurring Disconnect		OSS Rates ($)					
								First	Add'l	First	Add'l	SOMEC	SOMAN	SOMAN	SOMAN	SOMAN	SOMAN
ODUF/ADUF/CMDS																	
	ACCESS DAILY USAGE FILE (ADUF)																
		ADUF: Message Processing, per message					0.001656										
		ADUF: Data Transmission (CONNECT:DIRECT), per message					0.0001245										
	OPTIONAL DAILY USAGE FILE (ODUF)																
		ODUF: Recording, per message					0.0000071										
		ODUF: Message Processing, per message					0.002146										
		ODUF: Message Processing, per Magnetic Tape provisioned					35.91										
		ODUF: Data Transmission (CONNECT:DIRECT), per message					0.00010375										
	CENTRALIZED MESSAGE DISTRIBUTION SERVICE (CMDS)																
		CMDS: Message Processing, per message					0.004										
		CMDS: Data Transmission (CONNECT:DIRECT), per message					0.001										
	Notes: If no rate is identified in the contract, the rate for the specific service or function will be as set forth in applicable BellSouth tariff or as negotiated by the Parties upon request by either Party.																

ODUF/ADUF/CMDS - Georgia														Attachment: 7		Exhibit: A	
CATEGORY		RATE ELEMENTS	Interim	Zone	BCS	USOC	RATES ($)					Svc Order Submitted Elec per LSR	Svc Order Submitted Manually per LSR	Incremental Charge - Manual Svc Order vs. Electronic-1st	Incremental Charge - Manual Svc Order vs. Electronic-Add'l	Incremental Charge - Manual Svc Order vs. Electronic-Disc 1st	Incremental Charge - Manual Svc Order vs. Electronic-Disc Add'l
							Rec	Nonrecurring		Nonrecurring Disconnect		OSS Rates ($)					
								First	Add'l	First	Add'l	SOMEC	SOMAN	SOMAN	SOMAN	SOMAN	SOMAN
ODUF/ADUF/CMDS																	
	ACCESS DAILY USAGE FILE (ADUF)																
		ADUF: Message Processing, per message					0.001713										
		ADUF: Data Transmission (CONNECT:DIRECT), per message					0.00013027										
	OPTIONAL DAILY USAGE FILE (ODUF)																
		ODUF: Recording, per message					0.0000068										
		ODUF: Message Processing, per message					0.002167										
		ODUF: Message Processing, per Magnetic Tape provisioned					36.06										
		ODUF: Data Transmission (CONNECT:DIRECT), per message					0.00010856										
	CENTRALIZED MESSAGE DISTRIBUTION SERVICE (CMDS)																
		CMDS: Message Processing, per message					0.004										
		CMDS: Data Transmission (CONNECT:DIRECT), per message					0.001										
	Notes: If no rate is identified in the contract, the rate for the specific service or function will be as set forth in applicable BellSouth tariff or as negotiated by the Parties upon request by either Party.																

ODUF/ADUF/CMDS - Kentucky														Attachment: 7		Exhibit: A	
CATEGORY		RATE ELEMENTS	Interim	Zone	BCS	USOC	RATES ($)					Svc Order Submitted Elec per LSR	Svc Order Submitted Manually per LSR	Incremental Charge - Manual Svc Order vs. Electronic-1st	Incremental Charge - Manual Svc Order vs. Electronic-Add'l	Incremental Charge - Manual Svc Order vs. Electronic-Disc 1st	Incremental Charge - Manual Svc Order vs. Electronic-Disc Add'l
							Rec	Nonrecurring		Nonrecurring Disconnect		OSS Rates ($)					
								First	Add'l	First	Add'l	SOMEC	SOMAN	SOMAN	SOMAN	SOMAN	SOMAN
ODUF/ADUF/CMDS																	
	ACCESS DAILY USAGE FILE (ADUF)																
		ADUF: Message Processing, per message					0.001857										
		ADUF: Data Transmission (CONNECT:DIRECT), per message					0.00012447										
	OPTIONAL DAILY USAGE FILE (ODUF)																
		ODUF: Recording, per message					0.0000136										
		ODUF: Message Processing, per message					0.002506										
		ODUF: Message Processing, per Magnetic Tape provisioned					35.90										
		ODUF: Data Transmission (CONNECT:DIRECT), per message					0.00010372										
	CENTRALIZED MESSAGE DISTRIBUTION SERVICE (CMDS)																
		CMDS: Message Processing, per message					0.004										
		CMDS: Data Transmission (CONNECT:DIRECT), per message					0.001										
	Notes: If no rate is identified in the contract, the rate for the specific service or function will be as set forth in applicable BellSouth tariff or as negotiated by the Parties upon request by either Party.																

ODUF/ADUF/CMDS - Louisiana														Attachment: 7		Exhibit: A	
CATEGORY		RATE ELEMENTS	Interim	Zone	BCS	USOC	RATES ($)					Svc Order Submitted Elec per LSR	Svc Order Submitted Manually per LSR	Incremental Charge - Manual Svc Order vs. Electronic-1st	Incremental Charge - Manual Svc Order vs. Electronic-Add'l	Incremental Charge - Manual Svc Order vs. Electronic-Disc 1st	Incremental Charge - Manual Svc Order vs. Electronic-Disc Add'l
							Rec	Nonrecurring		Nonrecurring Disconnect		OSS Rates ($)					
								First	Add'l	First	Add'l	SOMEC	SOMAN	SOMAN	SOMAN	SOMAN	SOMAN
ODUF/ADUF/CMDS																	
	ACCESS DAILY USAGE FILE (ADUF)																
		ADUF: Message Processing, per message					0.007983										
		ADUF: Data Transmission (CONNECT:DIRECT), per message					0.00012681										
	OPTIONAL DAILY USAGE FILE (ODUF)																
		ODUF: Recording, per message					0.0000117										
		ODUF: Message Processing, per message					0.004641										
		ODUF: Message Processing, per Magnetic Tape provisioned					48.45										
		ODUF: Data Transmission (CONNECT:DIRECT), per message					0.00010568										
	CENTRALIZED MESSAGE DISTRIBUTION SERVICE (CMDS)																
		CMDS: Message Processing, per message					0.004										
		CMDS: Data Transmission (CONNECT:DIRECT), per message					0.001										
	Notes: If no rate is identified in the contract, the rate for the specific service or function will be as set forth in applicable BellSouth tariff or as negotiated by the Parties upon request by either Party.																

ODUF/ADUF/CMDS - Mississippi														Attachment: 7		Exhibit: A	
CATEGORY		RATE ELEMENTS	Interim	Zone	BCS	USOC	RATES ($)					Svc Order Submitted Elec per LSR	Svc Order Submitted Manually per LSR	Incremental Charge - Manual Svc Order vs. Electronic-1st	Incremental Charge - Manual Svc Order vs. Electronic-Add'l	Incremental Charge - Manual Svc Order vs. Electronic-Disc 1st	Incremental Charge - Manual Svc Order vs. Electronic-Disc Add'l
							Rec	Nonrecurring		Nonrecurring Disconnect		OSS Rates ($)					
								First	Add'l	First	Add'l	SOMEC	SOMAN	SOMAN	SOMAN	SOMAN	SOMAN
ODUF/ADUF/CMDS																	
	ACCESS DAILY USAGE FILE (ADUF)																
		ADUF: Message Processing, per message					0.008087										
		ADUF: Data Transmission (CONNECT:DIRECT), per message					0.00012803										
	OPTIONAL DAILY USAGE FILE (ODUF)																
		ODUF: Recording, per message					0.0000063										
		ODUF: Message Processing, per message					0.004707										
		ODUF: Message Processing, per Magnetic Tape provisioned					49.04										
		ODUF: Data Transmission (CONNECT:DIRECT), per message					0.00010669										
	CENTRALIZED MESSAGE DISTRIBUTION SERVICE (CMDS)																
		CMDS: Message Processing, per message					0.004										
		CMDS: Data Transmission (CONNECT:DIRECT), per message					0.001										
	Notes: If no rate is identified in the contract, the rate for the specific service or function will be as set forth in applicable BellSouth tariff or as negotiated by the Parties upon request by either Party.																

ODUF/ADUF/CMDS - North Carolina														Attachment: 7		Exhibit: A	
CATEGORY		RATE ELEMENTS	Interim	Zone	BCS	USOC	RATES ($)					Svc Order Submitted Elec per LSR	Svc Order Submitted Manually per LSR	Incremental Charge - Manual Svc Order vs. Electronic-1st	Incremental Charge - Manual Svc Order vs. Electronic-Add'l	Incremental Charge - Manual Svc Order vs. Electronic-Disc 1st	Incremental Charge - Manual Svc Order vs. Electronic-Disc Add'l
							Rec	Nonrecurring		Nonrecurring Disconnect		OSS Rates ($)					
								First	Add'l	First	Add'l	SOMEC	SOMAN	SOMAN	SOMAN	SOMAN	SOMAN
ODUF/ADUF/CMDS																	
	ACCESS DAILY USAGE FILE (ADUF)																
		ADUF: Message Processing, per message					0.01435										
		ADUF: Data Transmission (CONNECT:DIRECT), per message					0.0001277										
	OPTIONAL DAILY USAGE FILE (ODUF)																
		ODUF: Recording, per message					0.0003										
		ODUF: Message Processing, per message					0.0032										
		ODUF: Message Processing, per Magnetic Tape provisioned					54.61										
		ODUF: Data Transmission (CONNECT:DIRECT), per message					0.00004										
	CENTRALIZED MESSAGE DISTRIBUTION SERVICE (CMDS)																
		CMDS: Message Processing, per message					0.004										
		CMDS: Data Transmission (CONNECT:DIRECT), per message					0.001										
	Notes: If no rate is identified in the contract, the rate for the specific service or function will be as set forth in applicable BellSouth tariff or as negotiated by the Parties upon request by either Party.																

ODUF/ADUF/CMDS - South Carolina														Attachment: 7		Exhibit: A	
CATEGORY		RATE ELEMENTS	Interim	Zone	BCS	USOC	RATES ($)					Svc Order Submitted Elec per LSR	Svc Order Submitted Manually per LSR	Incremental Charge - Manual Svc Order vs. Electronic-1st	Incremental Charge - Manual Svc Order vs. Electronic-Add'l	Incremental Charge - Manual Svc Order vs. Electronic-Disc 1st	Incremental Charge - Manual Svc Order vs. Electronic-Disc Add'l
							Rec	Nonrecurring		Nonrecurring Disconnect		OSS Rates ($)					
								First	Add'l	First	Add'l	SOMEC	SOMAN	SOMAN	SOMAN	SOMAN	SOMAN
ODUF/ADUF/CMDS																	
	ACCESS DAILY USAGE FILE (ADUF)																
		ADUF: Message Processing, per message					0.008061										
		ADUF: Data Transmission (CONNECT:DIRECT), per message					0.00013036										
	OPTIONAL DAILY USAGE FILE (ODUF)																
		ODUF: Recording, per message					0.0000216										
		ODUF: Message Processing, per message					0.004704										
		ODUF: Message Processing, per Magnetic Tape provisioned					48.87										
		ODUF: Data Transmission (CONNECT:DIRECT), per message					0.00010863										
	CENTRALIZED MESSAGE DISTRIBUTION SERVICE (CMDS)																
		CMDS: Message Processing, per message					0.004										
		CMDS: Data Transmission (CONNECT:DIRECT), per message					0.001										
	Notes: If no rate is identified in the contract, the rate for the specific service or function will be as set forth in applicable BellSouth tariff or as negotiated by the Parties upon request by either Party.																

ODUF/ADUF/CMDS - Tennessee														Attachment: 7		Exhibit: A	
CATEGORY		RATE ELEMENTS	Interim	Zone	BCS	USOC	RATES ($)					Svc Order Submitted Elec per LSR	Svc Order Submitted Manually per LSR	Incremental Charge - Manual Svc Order vs. Electronic-1st	Incremental Charge - Manual Svc Order vs. Electronic-Add'l	Incremental Charge - Manual Svc Order vs. Electronic-Disc 1st	Incremental Charge - Manual Svc Order vs. Electronic-Disc Add'l
							Rec	Nonrecurring		Nonrecurring Disconnect		OSS Rates ($)					
								First	Add'l	First	Add'l	SOMEC	SOMAN	SOMAN	SOMAN	SOMAN	SOMAN
ODUF/ADUF/CMDS																	
	ACCESS DAILY USAGE FILE (ADUF)																
		ADUF: Message Processing, per message					0.0158054										
		ADUF: Data Transmission (CONNECT:DIRECT), per message					0.0001387										
	OPTIONAL DAILY USAGE FILE (ODUF)																
		ODUF: Recording, per message					0.0000044										
		ODUF: Message Processing, per message					0.0027366										
		ODUF: Message Processing, per Magnetic Tape provisioned					52.75										
		ODUF: Data Transmission (CONNECT:DIRECT), per message					0.0000339										
	CENTRALIZED MESSAGE DISTRIBUTION SERVICE (CMDS)																
		CMDS: Message Processing, per message					0.004										
		CMDS: Data Transmission (CONNECT:DIRECT), per message					0.001										
	Notes: If no rate is identified in the contract, the rate for the specific service or function will be as set forth in applicable BellSouth tariff or as negotiated by the Parties upon request by either Party.																

Attachment 8

Rights-of-Way, Conduits and Pole Attachments

Rights-of-Way, Conduits and Pole Attachments

BellSouth will provide nondiscriminatory access to any pole, duct, conduit, or right-of-way owned or controlled by BellSouth pursuant to 47 U.S.C. § 224, as amended by the Act, pursuant to terms and conditions of a license agreement subsequently negotiated with BellSouth's Competitive Structure Provisioning Center.

Attachment 9

Performance Measurements

Version 3Q03: 12/10/2003

PERFORMANCE MEASUREMENTS

Upon a particular Commission's issuance of an Order pertaining to Performance Measurements in a proceeding expressly applicable to all CLECs generally, BellSouth shall implement in that state such Performance Measurements as of the date specified by the Commission. Performance Measurements that have been Ordered in a particular state can currently be accessed via the internet at http://pmap.bellsouth.com. The following Service Quality Measurements (SQM) plan as it presently exists and as it may be modified in the future, is being included as the performance measurements currently in place for the state of Tennessee. At such time that the TRA issues a subsequent Order pertaining to Performance Measurements, such Performance Measurements shall supersede the SQM contained in the Agreement.

BELLSOUTH®

BellSouth Service Quality Measurement Plan (SQM)

Tennessee Performance Metrics

Measurement Descriptions
Version 2.00

Issue Date: July 1, 2003

Introduction

The BellSouth Service Quality Measurement Plan (SQM) describes in detail the measurements produced to evaluate the quality of service delivered to BellSouth's customers both wholesale and retail. The SQM was developed to respond to the requirements of the Communications Act of 1996 Section 251 (96 Act) which required BellSouth to provide non-discriminatory access to Competitive Local Exchange Carriers (CLEC)[1] and their Retail Customers. The reports produced by the SQM provide regulators, CLECs and BellSouth the information necessary to monitor the delivery of non-discriminatory access.

This plan results from the many divergent forces evolving from the 96 Act. The 96 Act, the Georgia Public Service Commission (GPSC) Order (Docket 7892-U 12/30/97), LCUG 1-7.0, the FCC's NPRM (CC Docket 98-56 RM9101 04/17/98), the Louisiana Public Service Commission (LPSC) Order (Docket U-22252 Subdocket C 04/19/98), numerous arbitration cases, LPSC sponsored collaborative workshops (10/98-02/00), and proceedings in Alabama, Florida, Mississippi, and North Carolina have and continue to influence the SQM. Per the Order in Docket 01-00193, issued by the Tennessee Regulatory Authority on October 4, 2002, this version of the SQM reflects the Florida Public Service Commission Order Nos. PSC-02-1736-PAA-TP, issued December 10, 2002, PSC-03-0529-PAA-TP, issued April 22, 2003 and PSC-03-0603-CO-TP, issued May 15, 2003.

The SQM and the reports flowing from it must change to reflect the dynamic requirements of the industry. New measurements are added as new products, systems, and processes are developed and fielded. New products and services are added as the markets for them develop and the processes stabilize. The measurements are also changed to reflect changes in systems, correct errors, and respond to both 3rd Party audit requirements and the Florida PSC.

This document is intended for use by someone with knowledge of the telecommunications industry, information technologies and a functional knowledge of the subject areas covered by the BellSouth Performance Measurements and the reports that flow from them.

Once it is approved, the most current copy of this document can be found on the web at URL: http://pmap.bellsouth.com in the Documentation/Exhibits folder.

Report Publication Dates

Each month, preliminary SQM reports will be posted to BellSouth's SQM web site (http://pmap.bellsouth.com) by 8:00 A.M. EST on the 21st day of each month or the first business day after the 21st. The validated SQM reports will be posted by 8:00 A.M. on the last day of the month. Reports not posted by this time will be considered late for SEEM payment purposes. Validated SEEM reports will be posted on the 15th of the following month. SEEM payments due will also be paid on the

[1] *Alternative Local Exchange Companies (ALEC) and Competing Local Providers (CLP) are referred to as Competitive Local Exchange Carriers (CLEC) in this document.*

15th of the following month. For instance: May data will be posted in preliminary SQM reports on June 21. Final validated SQM reports will be posted on the last day of the month. Final validated SEEM reports will be posted and payments mailed on the 15th of the following month. BellSouth shall retain the performance measurement raw data files for a period of 18 months and further retain the monthly reports produced in PMAP for a period of three years.

Report Delivery Methods

CLEC SQM and SEEM reports will be considered delivered when posted to the web site. The Tennessee Regulatory Authority has access to the web site. In addition, a copy of the SQM and Monthly State Summary reports will be filed with the TRA as soon as possible after the last day of each month.

Contents

Section 1: Operations Support Systems (OSS)

OSS-1: Average Response Interval and Percent within Interval (Pre-Ordering/Ordering) 4
OSS-2: OSS Availability (Pre-Ordering/Ordering) 7
OSS-3: OSS Availability (Maintenance & Repair) 9
OSS-4: Response Interval (Maintenance & Repair) 11
PO-1: Loop Makeup - Response Time – Manual 13
PO-2: Loop Makeup - Response Time - Electronic 15

Section 2: Ordering

O-1: Acknowledgement Message Timeliness 17
O-2: Acknowledgement Message Completeness 19
O-3: Percent Flow-Through Service Requests (Summary) 21
O-4: Percent Flow-Through Service Requests (Detail) 24
Flow-Through Error Analysis 27
O-6: CLEC LSR Information 29
O-7: Percent Rejected Service Requests 31
O-8: Reject Interval 34
O-9: Firm Order Confirmation Timeliness 38
O-10: Service Inquiry with LSR Firm Order Confirmation (FOC) Response Time Manual 42
O-11: Firm Order Confirmation and Reject Response Completeness 44
O-12: Speed of Answer in Ordering Center 46

Section 3: Provisioning

P-1: Mean Held Order Interval & Distribution Intervals 48
P-2: (Deleted) Average Jeopardy Notice Interval & Percentage of Orders Given Jeopardy Notices 51
P-2A: Jeopardy Notice Interval 52
P-2B: Percentage of Orders Given Jeopardy Notices 54
P-3: Percent Missed Initial Installation Appointments 57
P-3A: (Deleted) Percent Missed Installation Appointments Including Subsequent Appointment 60
P-4: Average Completion Interval (OCI) & Order Completion Interval Distribution 61
P-4A: (Deleted) Average Order Completion Interval (OCI) & Order Completion Interval Distribution 64
P-5: Average Completion Notice Interval 65
P-6: % Completions/Attempts without Notice or < 24 hours Notice 68
P-7: Coordinated Customer Conversions Interval 70
P-7A: Coordinated Customer Conversions – Hot Cut Timeliness% within Interval and Average Interval 72
P-7B: Coordinated Customer Conversions – Average Recovery Time 75
P-7C: Hot Cut Conversions - % Provisioning Troubles Received within 7 Days of a Completed Service Order 77
P-8: Cooperative Acceptance Testing - % of xDSL Loops Successfully Passing Cooperative Testing 79
P-9: % Provisioning Troubles within 30 Days of Service Order Completion 81
P-10: (Deleted) Total Service Order Cycle Time (TSOCT) 84
P-11: Service Order Accuracy 85
P-11A: Service Order Accuracy 87
P-12: (Deleted) LNP-Average Disconnect Timeliness Interval & Disconnect Timeliness Interval Distribution 90
P-13B: LNP-Percent Out of Service < 60 Minutes 91
P-13C: LNP-Percentage of Time BellSouth Applies the 10-Digit Trigger Prior to the LNP Order Due Date 93
P-13D: LNP-Average Disconnect Timeliness Interval Distribution (Non-Trigger) 95

Section 4: Maintenance & Repair

M&R-1: Missed Repair Appointments 97
M&R-2: Customer Trouble Report Rate 100
M&R-3: Maintenance Average Duration 103
M&R-4: Percent Repeat Troubles within 30 Days 106

M&R-5: Out of Service (OOS) > 24 Hours....109
M&R-6: Average Answer Time – Repair Centers.... 112
M&R-7: Mean Time To Notify CLEC of Network Outages.... 114

Section 5: Billing

B-1: Invoice Accuracy.... 116
B-2: Mean Time to Deliver Invoices.... 118
B-3: Usage Data Delivery Accuracy....120
B-4: Usage Data Delivery Completeness.... 122
B-5: Usage Data Delivery Timeliness.... 124
B-6: Mean Time to Deliver Usage....126
B-7: Recurring Charge Completeness.... 128
B-8: Non-Recurring Charge Completeness.... 130
B-9: Percent Daily Usage Feed Errors Corrected in “X” Business Days....132
B-10: Percent Billing Errors Corrected in “X” Business Days....134

Section 6: Operator Services and Directory Assistance

OS-1: Speed to Answer Performance/Average Speed to Answer - Toll....136
OS-2: Speed to Answer Performance/Percent Answered within “X” Seconds – Toll.... 138
DA-1: Speed to Answer Performance/Average Speed to Answer – Directory Assistance (DA).... 140
DA-2: Speed to Answer Performance/Percent Answered within “X” Seconds – Directory Assistance (DA).... 142

Section 7: Database Update Information

D-1: Average Database Update Interval....144
D-2: Percent Database Update Accuracy.... 146
D-3: Percent NXXs and LRNs Loaded by the LERG Effective Date....148

Section 8: E911

E-1: Timeliness....150
E-2: Accuracy.... 152
E-3: Mean Interval.... 153

Section 9: Trunk Group Performance

TGP-1: Trunk Group Performance-Aggregate.... 155
TGP-2: Trunk Group Performance-CLEC Specific.... 158

Section 10: Collocation

C-1: Collocation Average Response Time.... 161
C-2: Collocation Average Arrangement Time.... 163
C-3: Collocation Percent of Due Dates Missed.... 165

Section 11: Change Management

CM-1: Timeliness of Change Management Notices.... 167
CM-2: Change Management Notice Average Delay Days.... 169
CM-3: Timeliness of Documents Associated with Change.... 171
CM-4: Change Management Documentation Average Delay Days.... 173
CM-5: Notification of CLEC Interface Outages.... 175
CM-6: Percent of Software Errors Corrected in “X” (10, 30, 45) Business Days....177
CM-7: Percent of Change Requests Accepted or Rejected within 10 Days....179
CM-8: Percent Change Requests Rejected....180
CM-9: Number of Defects in Production Releases (Type 6 CR)....182
CM-10: Software Validations....184
CM-11: Percent of Change Requests Implemented within 60 Weeks of Prioritization....186

Appendix A: Reporting Scope
A-1: Standard Service Groupings 188
A-2: Standard Service Order Activities 188

Appendix B: Glossary of Acronyms and Terms
..... 189

Appendix C: BellSouth Audit Policy
C-1: BellSouth's Internal Audit Policy 199
C-2: BellSouth's External Audit Policy 199

Appendix D: OSS Tables
..... 200

Appendix E: Flow-Through Matrix
..... 205

Section 1: Operations Support Systems (OSS)

OSS-1: Average Response Interval and Percent within Interval (Pre-Ordering/Ordering)

Definition

The average response interval and percent within the Interval is the average times and percent of requests responded to within certain intervals for accessing legacy data associated with appointment scheduling, service and feature availability, address verification, request for Telephone numbers (TNs), and Customer Service Records (CSRs).

Exclusions

- Syntactically incorrect queries
- Scheduled OSS Maintenance
- Retail usage of LENS

Business Rules

The average response interval for retrieving pre-order/order information from a given legacy system is determined by summing the response times for all requests submitted to the legacy systems during the reporting period and dividing by the total number of legacy system requests for that month.

The response interval starts when the application (LENS or TAG for CLECs and RNS or ROS for BellSouth) submits a request to the legacy system and ends when the appropriate response is received by the client application. The percent of accesses to the legacy systems during the reporting period which take less than 2.3 seconds, the percent of accesses which take more than 6 seconds, and the percent which are less than or equal to 6.3 seconds are also captured. BellSouth will not schedule maintenance during the hours from 8:00 a.m. until 9:00 p.m., Monday through Friday.

Calculation

Response Interval = (a - b)

- a = Date and Time of Legacy Response
- b = Date and Time of Legacy Request

Average Response Interval = c / d

- c = Sum of Response Intervals
- d = Number of Legacy Requests During the Reporting Period

Percent within Interval = (e / f) X 100

- e = Count of requests within the designated Interval within the reporting period.
- f = Number of Legacy Requests during the Reporting Period for System for which a response was provided.

Report Structure

- Interface Type
- Not CLEC Specific
- Not Product/Service Specific
- Regional Level

Data Retained

Relating to CLEC Experience

- Report Month
- Legacy Contract (per reporting dimension)
- Response Interval
- Regional Scope

Relating to BellSouth Performance

- Report Month
- Legacy Contract (per reporting dimension)
- Response Interval
- Regional Scope

SQM Disaggregation - Analog/Benchmark

SQM Level of Disaggregation

- **RSAG – Address** (Regional Street Address Guide-Address) – stores street address information used to validate customer addresses. CLECs and BellSouth query this legacy system.
- **RSAG – TN** (Regional Street Address Guide-Telephone number) – contains information about facilities available and telephone numbers working at a given address. CLECs and BellSouth query this legacy system.
- **ATLAS** (Application for Telephone Number Load Administration and Selection) – acts as a warehouse for storing telephone numbers that are available for assignment by the system. It enables CLECs and BellSouth service reps to select and reserve telephone numbers. CLECs and BellSouth query this legacy system.
- **COFFI** (Central Office Feature File Interface) – stores information about product and service offerings and availability. CLECs query this legacy system.
- **DSAP** (DOE Support Application) – provides due date information. CLECs and BellSouth query this legacy system.
- **CRIS** (Customer Record Information System) – Source of CSR (Customer Service Record) information. Contains information about individual customers including listings, addresses, features, services, etc. CLECs and BellSouth can query for CSR information.
- **P/SIMS** (Product/Services Inventory Management system) – provides information on capacity, tariffs, inventory and service availability. CLECs query this legacy system.
- **OASIS** (Obtain Available Services Information Systems) – Information on feature and rate availability. BellSouth queries this legacy system.

SQM Analog/Benchmark

- Parity + 2 seconds

(See Appendix D: Tables for SQM OSS Legacy Access Times)

SEEM Measure

SEEM	Tier I	Tier II	Tier III
Yes	.....	X	.....

SEEM Disaggregation - Analog/Benchmark

SEEM Disaggregation

- **RSAG – Address** (Regional Street Address Guide-Address) – stores street address information used to validate customer addresses. CLECs and BellSouth query this legacy system.
- **RSAG – TN** (Regional Street Address Guide-Telephone number) – contains information about facilities available and telephone numbers working at a given address. CLECs and BellSouth query this legacy system.
- **ATLAS** (Application for Telephone Number Load Administration and Selection) – acts as a warehouse for storing telephone numbers that are available for assignment by the system. It enables CLECs and BellSouth service reps to select and reserve

telephone numbers. CLECs and BellSouth query this legacy system.

- **COFFI** (Central Office Feature File Interface) – stores information about product and service offerings and availability. CLECs query this legacy system.
- **DSAP** (DOE Support Application) – provides due date information. CLECs and BellSouth query this legacy system.
- **CRIS** (Customer Record Information System) – Source of CSR (Customer Service Record) information. Contains information about individual customers including listings, addresses, features, services, etc. CLECs and BellSouth can query for CSR information.
- **P/SIMS** (Product/Services Inventory Management system) – provides information on capacity, tariffs, inventory and service availability. CLECs query this legacy system.
- **OASIS** (Obtain Available Services Information Systems) – Information on feature and rate availability. BellSouth queries this legacy system.

SEEM Analog/Benchmark

- Parity + 2 Seconds

(See Appendix D: Tables for SEEM OSS Legacy Systems)

OSS-2: OSS Availability (Pre-Ordering/Ordering)

Definition

Percent of time OSS interface is functionally available compared to scheduled availability. Availability percentages for CLEC interface and for all Legacy systems accessed by them are captured. ("Functional Availability" is the amount of time in hours during the reporting period that the legacy systems are available to users. The planned System Scheduled Availability is the time in hours per day that the legacy system is scheduled to be available.)

Scheduled availability is posted on the Interconnection website: (www.interconnection.bellsouth.com/oss/osshour.html)

Exclusions

- CLEC impacting troubles caused by factors outside of BellSouth's purview, e.g., troubles in customer equipment, troubles in networks owned by telecommunications companies other than BellSouth, etc.
- Degraded service outages which are defined as a critical function that is normally performed by the CLEC or is normally provided by an application or system available to the CLEC, but with significantly reduced response or processing time.
- Scheduled OSS Maintenance

Business Rules

This measurement captures the functional availability of applications/interfaces as a percentage of scheduled availability for the same systems. Only full and Loss of Functionality outages are included in the calculation for this measure. Full outages are defined as occurrences of either of the following:

- Application/Interface application is down or totally inoperative.
- Application is totally inoperative for customers attempting to access or use the application. This includes transport outages when they may be directly associated with a specific application.
- Loss of Functionality outages are defined as:
  - A critical function that is normally performed by the CLEC or is normally provided by an application or system is temporarily unavailable to the CLEC.

Comparison to an internal benchmark provides a vehicle for determining whether or not CLECs and retail BellSouth entities are given comparable opportunities for use of pre-ordering and ordering systems.

(Note: Scheduled maintenance will not be performed between the hours of 8:00 a.m through 9:00 p.m. Monday through Friday.)

Calculation

OSS Availability (Pre-Ordering/Ordering) = (a / b) X 100

- a = Functional Availability
- b = Scheduled Availability

Report Structure

- Interface Type
- Not CLEC Specific
- Not Product/Service Specific
- Regional Level

Data Retained

Relating to CLEC Experience

- Report Month
- Legacy Contract Type (per reporting dimension)
- Regional Scope
- Hours of Downtime

Relating to BellSouth Performance

- Report Month
- Legacy Contract Type (per reporting dimension)
- Regional Scope
- Hours of Downtime

SQM Disaggregation - Analog/Benchmark

SQM Level of Disaggregation	SQM Analog/Benchmark
• Regional Level, Per OSS Interface	>= 99.5%

(See Appendix D: Tables for SQM OSS Availability)

SEEM Measure

SEEM	Tier I	Tier II
Yes		X

SEEM Disaggregation - Analog/Benchmark

SEEM Disaggregation	SEEM Analog/Benchmark
• Regional Level, Per OSS Interface	>= 99.5%

(See Appendix D: Tables for SEEM OSS Availability)

OSS-3: OSS Availability (Maintenance & Repair)

Definition

Percent of time applications are functionally available as compared to scheduled availability. Calculations are based upon availability of applications and interfacing applications utilized by CLECs for maintenance and repair. "Functional Availability" is defined as the number of hours in the reporting period that the applications/interfaces are available to users. "Scheduled Availability" is defined as the number of hours in the reporting period that the applications/interfaces are scheduled to be available.

Scheduled availability is posted on the Interconnection website: (www.interconnection.bellsouth.com/oss/osshour.html)

Exclusions

- CLEC-impacting trouble caused by factors outside of BellSouth's purview, e.g., troubles in customer equipment, troubles in networks owned by telecommunications companies other than BellSouth, etc.
- Degraded service outages which are defined as a critical function that is normally performed by the CLEC or is normally provided by an application or system available to the CLEC, but with significantly reduced response or processing time.

Business Rules

This measurement captures the functional availability of applications/interfaces as a percentage of scheduled availability for the same systems. Only full outages are included in the calculations for this measure. Full outages are defined as occurrences of either of the following:

- Application/interfacing application is down or totally inoperative.
- Application is totally inoperative for customers attempting to access or use the application. This includes transport outages when they may be directly associated with a specific application.

Loss of Functionality outages are defined as:

- A critical function that is normally performed by the CLEC or is normally provided by an application or system is temporarily unavailable to the CLEC.

Comparison to an internal benchmark provides a vehicle for determining whether or not CLECs and retail BellSouth entities are given comparable opportunities for use of maintenance and repair systems.

Calculation

OSS Availability (a / b) X 100

- a = Functional Availability
- b = Scheduled Availability

Report Structure

- Interface Type
- Not CLEC Specific
- Not Product/Service Specific
- Regional Level

Data Retained

Relating to CLEC Experience

- Availability of CLEC TAFI
- Availability of LMOS HOST, MARCH, SOCS, CRIS, PREDICTOR, LNP and OSPCM

- ECTA

Relating to BellSouth Performance

- Availability of BellSouth TAFI
- Availability of LMOS HOST, MARCH, SOCS, CRIS, PREDICTOR, LNP and OSPCM

SQM Disaggregation - Analog/Benchmark

SQM Level of Disaggregation	SQM Analog/Benchmark
• Regional Level, Per OSS Interface	>= 99.5%

(See Appendix D: Tables for OSS Availability (M&R)

SEEM Measure

SEEM	Tier I	Tier II
Yes		X

SEEM Disaggregation - Analog/Benchmark

SEEM Disaggregation	SEEM Analog/Benchmark
• Regional Level, Per OSS Interface	>= 99.5%

(See Appendix D: Tables for SEEM OSS Availability (M&R)

OSS-4: Response Interval (Maintenance & Repair)

Definition

The response intervals are determined by subtracting the time a request is received on the BellSouth side of the interface from the time the response is received from the legacy system. Percentages of requests falling into each interval category are reported, along with the actual number of requests falling into those categories.

Exclusions

None

Business Rules

This measure is designed to monitor the time required for the CLEC and BellSouth interface system to obtain from BellSouth's legacy systems the information required to handle maintenance and repair functions. The clock starts on the date and time when the request is received on the BellSouth side of the interface and the clock stops when the response has been transmitted through that same point to the requester.

Note: The OSS Response Interval BellSouth Total Report is a combination of BellSouth Residence and Business Total.

Calculation

OSS Response Interval = (a - b)

- a = Query Response Date and Time
- b = Query Request Date and Time

Percent Response Interval (per category) = (c / d) X 100

- c = Number of Response Intervals in category "X"
- d = Number of Queries Submitted in the Reporting Period

where, "X" is <= 4, > 4 <= 10, <= 10, > 10, or > 30 seconds.

Average Interval = (e / f)

- e = Sum of Response Intervals
- f = Number of Queries Submitted in the Reporting Period

Report Structure

- Not CLEC Specific
- Not Product/Service Specific
- Regional Level

Data Retained

Relating to CLEC Experience

- CLEC Transaction Intervals

Relating to BellSouth Performance

- BellSouth Business and Residential Transactions Intervals

SQM Disaggregation - Analog/Benchmark

SQM Level of Disaggregation	SQM Analog/Benchmark
• Regional Level, Per OSS Interface	Parity with Retail

(See Appendix D: Tables for Legacy System Access Times for M&R)

Note: BellSouth's Appendix D lists the query functions and the appropriate legacy systems that the queries travel through to return a response.

SEEM Measure

SEEM	Tier I	Tier II
Yes		X

SEEM Disaggregation - Analog/Benchmark

SEEM Disaggregation	SEEM Analog/Benchmark
• Region Level, Per OSS Interface	Parity with Retail

PO-1: Loop Makeup - Response Time – Manual

Definition

This report measures the average interval and percent within the interval from the submission of a Manual Loop Makeup Service Inquiry (LMUSI) to the distribution of Loop Makeup information back to the CLEC.

Exclusions

- Inquiries, which are submitted electronically
- Designated Holidays are excluded from the interval calculation
- Weekends are excluded from the interval calculation
- Canceled Inquiries

Business Rules

The CLEC Manual Loop Makeup Service Inquiry (LMUSI) process includes inquiries submitted via E-mail or FAX to BellSouth's Complex Resale Support Group (CRSG)

This measurement combines three intervals:

1. From receipt of a valid Service Inquiry for Loop Makeup to hand off to the Service Advocacy Center (SAC) for "Look-up."
2. From SAC start date to SAC complete date
3. From SAC complete date to date the Complex Resale Support Group (CRSG) distributes loop makeup information back to the CLEC.

The "Receive Date" is defined as the date the Manual LMUSI is received by the CRSG. It is counted as day Zero. LMU "Return Date" is defined as the date the LMU information is sent back to the CLEC from BellSouth. The interval calculation is reset to Zero when a CLEC initiated change occurs on the Manual LMU request.

Note: The Loop Makeup Service Inquiry Form does not require the CLEC to furnish the type of Loop. The CLEC determines whether the loop makeup will support the type of service they wish to order or not and qualifies the loop. If the loop makeup will support the service, a firm order LSR is submitted by the CLEC.

(A valid Service Inquiry is an inquiry that has all required fields populated correctly and has not been returned for clarification.)

Calculation

Response Interval = (a - b)

- a = Date the LMUSI returned to CLEC
- b = Date the LMUSI is received

Average Interval = (c / d)

- c = Sum of all Response Intervals
- d = Total Number of LMUSIs received within the reporting period

Percent within interval = (e / f) X 100

- e = Total LMUSIs received within the interval
- f = Total Number of LMUSIs processed within the reporting period

Report Structure

- CLEC Aggregate
- CLEC Specific
- Geographic Scope
  - State
  - Region
- Interval for manual LMUs:
  0 – <=1 day
  >1 – <= 2 days
  >2 – <= 3 days
  0 - <= 3 days
  >3 – <= 6 days
  >6 – <= 10 days
  > 10 days
- Average Interval in days

Data Retained

Relating to CLEC Experience

- Report Month
- Total Number of Inquiries
- SI Intervals
- State and Region

Relating to BellSouth Performance

SQM Disaggregation - Analog/Benchmark

SQM Level of Disaggregation	SQM Analog/Benchmark
• Loops	Benchmark: 95% <= 3 Business Days

SEEM Measure

SEEM	Tier I	Tier II
Yes	X	X

SEEM Disaggregation - Analog/Benchmark

SEEM Disaggregation	SEEM Analog/Benchmark
• Loops	Benchmark: 95% <= 3 Business Days

PO-2: Loop Makeup - Response Time - Electronic

Definition

This report measures the average interval and the percent within the interval from the electronic submission of a Loop Makeup Service Inquiry (LMUSI) to the distribution of Loop Makeup information back to the CLEC.

Exclusions

- Manually submitted inquiries
- Canceled Requests

Business Rules

The response interval starts when the CLEC's Mechanized Loop Makeup Service Inquiry (LMUSI) is submitted electronically through the Operational Support Systems interface, TAG. It ends when BellSouth's Loop Facility Assignment and Control System (LFACS) responds electronically to the CLEC with the requested Loop Makeup data via the TAG Interface. LSRs submitted via LENs will be reflected in the results for the TAG interface.

> **Note**: The Loop Makeup Service Inquiry Form does not require the CLEC to furnish the type of Loop. The CLEC determines whether the loop makeup will support the type of service they wish to order or not and qualifies the loop. If the loop makeup will support the service, a firm order LSR is submitted by the CLEC. EDI is not a pre-ordering system, and, therefore, is not applicable in this measure.

Calculation

Response Interval = (a - b)

- a = Date and Time the LMUSI returned to CLEC
- b = Date and Time the LMUSI is received

Average Interval = (c / d)

- c = Sum of all response intervals
- d = Total Number of LMUSIs received within the reporting period

Percent within interval = (e / f) X 100

- e = Total LMUSIs received within the interval
- f = Total Number of LMUSIs processed within the reporting period

Report Structure

- CLEC Aggregate
- CLEC Specific
- Geographic Scope
  - State
  - Region
- Interval for electronic LMUs:
  0 – <= 1 minute
  >1 – <= 5 minutes
  0 - <= 5 minutes
  > 5 – <= 8 minutes
  > 8 – <= 15 minutes

> 15 minutes
- Average Interval in minutes

Data Retained

Relating to CLEC Experience

- Report Month
- Total Number of Inquires
- SI Interval
- State and Region

Relating to BellSouth Performance

- Not Applicable

SQM Disaggregation - Analog/Benchmark

SQM Level of Disaggregation	SQM Analog/Benchmark
• Loop	Benchmark: 95% <= 1 Minute

SEEM Measure

SEEM	Tier I	Tier II
Yes	X	X

SEEM Disaggregation - Analog/Benchmark

SEEM Disaggregation	SEEM Analog/Benchmark
• Loop	95% <= 1 Minute

Section 2: Ordering

O-1: Acknowledgement Message Timeliness

Definition

This measurement provides the response interval and percent within the interval from the time an LSR or transmission (may contain multiple LSRs from one or more CLECs in multiple states) is electronically submitted via EDI or TAG until an acknowledgement notice is sent by the system.

Exclusions

- Scheduled OSS Maintenance
- Manually Submitted LSRs

Business Rules

The process includes EDI and TAG system functional acknowledgements for all Local Service Requests (LSRs) which are electronically submitted by the CLEC. The start time is the receipt time of the LSR at BellSouth's side of the interface (gateway). The end time is when the acknowledgement is transmitted by BellSouth at BellSouth's side of the interface (gateway). For those CLECs using EDI, if more than one CLEC uses the same ordering center, an Acknowledgement Message will be returned to the "Aggregator", however, BellSouth will not be able to determine which specific CLEC this message represented.

Calculation

Response Interval = (a - b)

- a = Date and Time Acknowledgement Notices returned to CLEC
- b = Date and Time Messages/LSRs electronically submitted by the CLEC via EDI or TAG respectively

Average Response Interval = (c / d)

- c = Sum of all Response Intervals for returned acknowledgements
- d = Total number of electronically submitted Messages/LSRs received, via EDI or TAG respectively, for which Acknowledgement Notices were returned in the Reporting Period.

Percent within Interval = (e / f) X 100

- e = Total number of electronically submitted messages/LSRs received, from CLEC via EDI or TAG respectively, in the Reporting Period.
- f = Total number of electronically submitted messages/LSRs acknowledged in the Reporting Period.

Reporting Structure

- CLEC Aggregate
- CLEC Specific
- Geographic Scope
  - Region
- Electronically Submitted LSRs
  0 – <=10 minutes
  > 10 – <= 20 minutes
  > 20 – <= 30 minutes
  0 – <= 30 minutes
  > 30 – <= 45 minutes
  > 45 – <= 60 minutes

> 60 – <= 120 minutes
> 120 minutes
- Average interval for electronically submitted LSRs in minutes

Data Retained

Relating to CLEC Experience

- Report Month
- Record of Functional Acknowledgements

Relating to BellSouth Performance

- Not Applicable

SQM Disaggregation - Analog/Benchmark

SQM Level of Disaggregation	SQM Analog/Benchmark
EDI	EDI – 95% <= 30 Minutes
TAG	TAG – 95% <= 30 Minutes

SEEM Measure

SEEM	Tier I	Tier II
Yes	X	X

SEEM Disaggregation - Analog/Benchmark

SEEM Disaggregation	SEEM Analog/Benchmark
EDI	EDI – 95% <= 30 Minutes
TAG	TAG – 95% <= 30 Minutes

O-2: Acknowledgement Message Completeness

Definition

This measurement provides the percent of Messages/LSRs received via EDI or TAG, which are acknowledged electronically.

Exclusions

Manually submitted LSRs

Business Rules

EDI and TAG send Functional Acknowledgements for all LSRs, which are electronically submitted by a CLEC. For those CLECs using EDI, if more than one CLEC uses the same ordering center, an Acknowledgement Message will be returned to the "Aggregator", however, BellSouth will not be able to determine which specific CLEC this message represented. The Acknowledgement Message is returned prior to the determination of whether the LSR will be partially mechanized or fully mechanized.

Calculation

Acknowledgement Completeness = (a / b) X 100

- a = Total number of Functional Acknowledgements returned in the reporting period for Messages/LSRs electronically submitted by EDI or TAG respectively
- b = Total number of electronically submitted Messages/LSRs received in the reporting period by EDI or TAG respectively

Report Structure

- CLEC Aggregate
- CLEC Specific
- Geographic Scope
  - Region

Note: Acknowledgement message is generated before the system recognizes whether this message (LSR) will be partially or fully mechanized.

Data Retained

Relating to CLEC Experience

- Report Month
- Record of Functional Acknowledgements

Relating to BellSouth Performance

- Not Applicable

SQM Disaggregation - Analog/Benchmark

SQM Level of Disaggregation	SQM Analog/Benchmark
EDI	Benchmark: 99.9%
TAG	Benchmark: 99.5%

SEEM Measure

SEEM	Tier I	Tier II
Yes	X	X

SEEM Disaggregation - Analog/Benchmark

SEEM Disaggregation	SEEM Analog/Benchmark
• EDI	Benchmark: 99.9%
• TAG	Benchmark: 99.5%

O-3: Percent Flow-Through Service Requests (Summary)

Definition

The percentage of Local Service Requests (LSR) and LNP Local Service Requests (LNP LSRs) submitted electronically via the CLEC mechanized ordering process that flow through and reach a status for a FOC to be issued, without manual intervention.

Exclusions

- Fatal Rejects
- Auto Clarification
- Manual Fallout for Percent Flow-Through only
- CLEC System Fallout
- Scheduled OSS Maintenance

Business Rules

The CLEC mechanized ordering process includes all LSRs, including supplements (subsequent versions) which are submitted through one of the three gateway interfaces (TAG, EDI and LENS), that flow through and reach a status for a FOC to be issued, without manual intervention. These LSRs can be divided into two classes of service: Business and Residence, and two types of service: Resale, and Unbundled Network Elements (UNE). The CLEC mechanized ordering process does not include LSRs which are submitted manually (for example, fax and courier) or are not designed to flow through (for example, Manual Fallout.)

Definitions:

Fatal Rejects: Errors that prevent an LSR, submitted electronically by the CLEC, from being processed further. When an LSR is submitted by a CLEC, LEO/LNP Gateway will perform edit checks to ensure the data received is correctly formatted and complete. For example, if the PON field contains an invalid character, LEO/LNP Gateway will reject the LSR and the CLEC will receive a Fatal Reject.

Auto-Clarification: Clarifications that occur due to invalid data within the LSR. LESOG/LAUTO will perform data validity checks to ensure the data within the LSR is correct and valid. For example, if the address on the LSR is not valid according to RSAG, or if the LNP is not available for the NPA NXX requested, the CLEC will receive an Auto-Clarification.

Manual Fallout: Planned Fallout that occur by design. Certain LSRs are designed to fallout of the Mechanized Order Process due to their complexity. These LSRs are manually processed by the LCSC. When a CLEC submits an LSR, LESOG/LAUTO will determine if the LSR should be forwarded to LCSC for manual handling. Following are the categories for Manual Fallout:

1. Complex*
2 Special pricing plans
3. Some Partial migrations (All LNP Partial Migrations)
4. New telephone number not yet posted to BOCRIS
5. Pending order review required
6. CSR inaccuracies such as invalid or missing CSR data in CRIS
7. Expedites (requested by the CLEC)
8. Denials-restore and conversion, or disconnect and conversion orders
9. Class of service invalid in certain states with some types of service
10. Low volume such as activity type “T” (move)
11. More than 25 business lines, or more than 15 loops
12. Transfer of calls option for the CLEC end users
13. Directory Listings (Identions and Captions)
14. LNP Only – Supplement LSRs except supps of O-2 (Due Date Changes) on Req Type CB

*See LSR Flow-Through Matrix in Appendix E for a list of services, including complex services, and whether LSRs issued for the services are eligible to flow through. The matrix is updated automatically when new services are added or the systems are improved to allow a service to flow through. The current version of the Flow-Through Matrix is on the PMAP website (http://pmap.bellsouth.com) in the Documentation/Exhibits folder. Any change in the flow-through order category from flow-through to non-flow-through shall require prior

Commission approval.

Total System Fallout: Errors that require manual review by the LCSC to determine if the error is caused by the CLEC, or is due to BellSouth system functionality. If it is determined the error is caused by the CLEC, the LSR will be sent back to the CLEC for clarification. If it is determined the error is BellSouth caused, the LCSC representative will correct the error, and the LSR will continue to be processed.

Z Status: LSRs that receive a supplemental LSR submission prior to final disposition of the original LSR.

Calculation

Percent Flow Through = a / [b - (c + d + e + f)] X 100

- a = the total number of LSRs that flow through LESOG/LAUTO and reach a status for a FOC to be issued
- b = the number of LSRs passed from LEO/LNP Gateway to LESOG/LAUTO
- c = the number of LSRs that fallout for manual processing
- d = the number of LSRs that are returned to the CLEC for auto clarification
- e = the number of LSRs that are returned to the CLEC from the LCSC due to CLEC clarification
- f = the number of LSRs that receive a Z status.

Percent Achieved Flow Through = a / [b - (c + d + e)] X 100

- a = the number of LSRs that flow through LESOG/LAUTO and reach a status for a FOC to be issued.
- b = the number of LSRs passed from LEO/LNP Gateway to LESOG/LAUTO
- c = the number of LSRs that are returned to the CLEC for auto clarification
- d = the number of LSRs that are returned to the CLEC from the LCSC due to CLEC clarification
- e = the number of LSRs that receive Z status

Report Structure

- CLEC Aggregate
  - Region

Data Retained

Relating to CLEC Experience

- Report Month
- Total Number of LSRs Received, by Interface, by CLEC
  - TAG
  - EDI
  - LENS
- Total Number of Errors by Type, by CLEC
  - Fatal Rejects
  - Auto Clarification
  - CLEC Caused System Fallout
- Total Number of Errors by Error Code
- Total Fallout for Manual Processing

Relating to BellSouth Performance

- Report Month
- Total Number of Errors by Type
  - BellSouth System Error

SQM Disaggregation - Analog/Benchmark

SQM Level of Disaggregation	SQM Analog/Benchmark[a]
• Residence	Benchmark: 95%
• Business	Benchmark: 90%
• UNE - Loops	Benchmark: 85%
• UNE-P	Benchmark: 90%
• LNP	Benchmark: 85%

SEEM Measure

SEEM	Tier I	Tier II
Yes		X

SEEM Disaggregation - Analog/Benchmark

SEEM Disaggregation	SEEM Analog/Benchmark[a]
• Residence	Benchmark: 95%
• Business	Benchmark: 90%
• UNE - Loops	Benchmark: 85%
• UNE-P	Benchmark: 90%
• LNP	Benchmark: 85%

[a] *Benchmarks do not apply to the "Percent Achieved Flow-Through."*

O-4: Percent Flow-Through Service Requests (Detail)

Definition

A detailed list, by CLEC, of the percentage of Local Service Requests (LSR) and LNP Local Service Requests (LNP LSRs) submitted electronically via the CLEC mechanized ordering process that flow through and reach a status for a FOC to be issued, without manual or human intervention.

Exclusions

- Fatal Rejects
- Auto Clarification
- Manual Fallout for Percent Flow-Through only
- CLEC System Fallout
- Scheduled OSS Maintenance

Business Rules

The CLEC mechanized ordering process includes all LSRs, including supplements (subsequent versions) which are submitted through one of the three gateway interfaces (TAG, EDI, and LENS), that flow through and reach a status for a FOC to be issued, without manual intervention. These LSRs can be divided into two classes of service: Business and Residence, and two types of service: Resale, and Unbundled Network Elements (UNE). The CLEC mechanized ordering process does not include LSRs, which are submitted manually (for example, fax and courier) or are not designed to flow through (for example, Manual Fallout.)

Definitions:

Fatal Rejects: Errors that prevent an LSR, submitted electronically by the CLEC, from being processed further. When an LSR is submitted by a CLEC, LEO/LNP Gateway will perform edit checks to ensure the data received is correctly formatted and complete. For example, if the PON field contains an invalid character, LEO/LNP Gateway will reject the LSR and the CLEC will receive a Fatal Reject.

Auto-Clarification: Clarifications that occur due to invalid data within the LSR. LESOG/LAUTO will perform data validity checks to ensure the data within the LSR is correct and valid. For example, if the address on the LSR is not valid according to RSAG, or if the LNP is not available for the NPA NXX requested, the CLEC will receive an Auto-Clarification.

Manual Fallout: Planned Fallout that occur by design. Certain LSRs are designed to fallout of the Mechanized Order Process due to their complexity. These LSRs are manually processed by the LCSC. When a CLEC submits an LSR, LESOG/LAUTO will determine if the LSR should be forwarded to LCSC for manual handling. Following are the categories for Manual Fallout:

1. Complex*
2 Special pricing plans
3. Some Partial migrations (All LNP Partial Migrations)
4. New telephone number not yet posted to BOCRIS
5. Pending order review required
6. CSR inaccuracies such as invalid or missing CSR data in CRIS
7. Expedites (requested by the CLEC)
8. Denials-restore and conversion, or disconnect and conversion orders
9. Class of service invalid in certain states with some types of service
10. Low volume such as activity type “T” (move)
11. More than 25 business lines, or more than 15 loops
12. Transfer of calls option for the CLEC end users
13. Directory Listings (Identions and Captions)
14. LNP Only – Supplement LSRs except supps of O-2 (Due Date Changes) on Req Type CB

*See LSR Flow-Through Matrix in Appendix E for a list of services, including complex services, and whether LSRs issued for the services are eligible to flow through. The matrix is updated automatically when new services are added or the systems are improved to allow a service to flow through. The current version of the Flow-Through Matrix is on the PMAP website (http://pmap.bellsouth.com) in the

Documentation/Exhibits folder. Any change in the flow-through order category from flow-through to non-flow-through shall require prior Commission approval.

Total System Fallout: Errors that require manual review by the LCSC to determine if the error is caused by the CLEC, or is due to BellSouth system functionality. If it is determined the error is caused by the CLEC, the LSR will be sent back to the CLEC for clarification. If it is determined the error is BellSouth caused, the LCSC representative will correct the error, and the LSR will continue to be processed.

Z Status: LSRs that receive a supplemental LSR submission prior to final disposition of the original LSR.

Calculation

Percent Flow Through = a / [b - (c + d + e + f)] X 100

- a = the total number of LSRs that flow through LESOG/LAUTO and reach a status for a FOC to be issued
- b = the number of LSRs passed from LEO/LNP Gateway to LESOG/LAUTO
- c = the number of LSRs that fallout for manual processing
- d = the number of LSRs that are returned to the CLEC for auto clarification
- e = the number of LSRs that are returned to the CLEC from the LCSC due to CLEC clarification
- f = the number of LSRs that receive a Z status.

Percent Achieved Flow Through = a / [b - (c + d + e)] X 100

- a = the number of LSRs that flow through LESOG/LAUTO and reach a status for a FOC to be issued
- b = the number of LSRs passed from LEO/LNP Gateway to LESOG/LAUTO
- c = the number of LSRs that are returned to the CLEC for auto clarification
- d = the number of LSRs that are returned to the CLEC from the LCSC due to CLEC clarification
- e = the number of LSRs that receive Z status

Report Structure

Provides the flow through percentage for each CLEC (by alias designation) submitting LSRs through the CLEC mechanized ordering process. The report provides the following:

- CLEC (by alias designation)
- Number of fatal rejects
- Mechanized interface used
- Total mechanized LSRs
- Total manual fallout
- Number of auto clarifications returned to CLEC
- Number of validated LSRs
- Number of BellSouth caused fallout
- Number of CLEC caused fallout
- Number of Service Orders Issued
- Base calculation
- CLEC error excluded calculation
- Region

Data Retained

Relating to CLEC Experience

- Report Month
- Total Number of LSRs Received, by Interface, by CLEC
  - TAG
  - EDI
  - LENS
- Total Number of Errors by Type, by CLEC
  - Fatal Rejects
  - Auto Clarification

- CLEC Errors
- Total Number of Errors by Error Code
- Total Fallout for Manual Processing

Relating to BellSouth Performance

- Report Month
- Total Number of Errors by Type
  - BellSouth System Error

SQM Disaggregation - Analog/Benchmark

SQM Level of Disaggregation	SQM Analog/Benchmark[a]
Residence	Benchmark: 95%
Business	Benchmark: 90%
UNE - Loops	Benchmark: 85%
UNE-P	Benchmark: 90%
LNP	Benchmark: 85%

SEEM Measure

SEEM	Tier I	Tier II
Yes	X	

SEEM Disaggregation - Analog/Benchmark

SEEM Disaggregation	SEEM Analog/Benchmark
Residence	Benchmark: 95%
Business	Benchmark: 90%
UNE- Loops	Benchmark: 85%
UNE-P	Benchmark: 90%
LNP	Benchmark: 85%

[a] *Benchmarks do not apply to the "Percent Achieved Flow-Through."*

Flow-Through Error Analysis

Definition

An analysis of each error type (by error code) that was experienced by the LSRs that did not flow through or reached a status for a FOC to be issued.

Exclusions

Each Error Analysis is error code specific, therefore exclusions are not applicable.

Business Rules

The CLEC mechanized ordering process includes all LSRs, including supplements (subsequent versions) which are submitted through one of the three gateway interfaces (TAG, EDI, and LENS), that flow through and reach a status for a FOC to be issued. The CLEC mechanized ordering process does not include LSRs which are submitted manually (for example, fax and courier).

Calculation

Total for each error type

Report Structure

Provides an analysis of each error type (by error code). The report is in descending order by count of each error code and provides the following:

- Error Type (by error code)
- Count of each error type
- Percent of each error type
- Cumulative percent
- Error Description
- CLEC Caused Count of each error code
- Percent of aggregate by CLEC caused count
- Percent of CLEC caused count
- BellSouth Caused Count of each error code
- Percent of aggregate by BellSouth caused count
- Percent of BellSouth by BellSouth caused count.

Data Retained

Relating to CLEC Experience

- Report Month
- Total Number of LSRs Received
- Total Number of Errors by Type (by Error Code)
  - CLEC caused error

Relating to BellSouth Performance

- Report Month
- Total Number of Errors by Type (by Error Code)
  - BellSouth System Error

SQM Disaggregation - Analog/Benchmark

SQM Level of Disaggregation	SQM Analog/Benchmark
• Not Applicable	Not Applicable

SEEM Measure

SEEM	Tier I	Tier II
No		

SEEM Disaggregation - Analog/Benchmark

SEEM Disaggregation	SEEM Analog/Benchmark
• Not Applicable	Not Applicable

O-6: CLEC LSR Information

Definition

A list with the flow through activity of LSRs by CC, PON and Ver, issued by each CLEC during the report period.

Exclusions

- Fatal Rejects
- LSRs Submitted Manually

Business Rules

The CLEC mechanized ordering process includes all LSRs, including supplements (subsequent versions) which are submitted through one of the three gateway interfaces (TAG, EDI, and LENS), that flow through and reach a status for a FOC to be issued. The CLEC mechanized ordering process does not include LSRs which are submitted manually (for example, fax and courier).

Calculation

Not Applicable

Report Structure

Provides a list with the flow through activity of LSRs by CC, PON and Ver, issued by each CLEC during the report period with an explanation of the columns and content. This report is available on a CLEC specific basis. The report provides the following for each LSR.

- CC
- PON
- Ver
- Timestamp
- Type
- Err #
- Note or Error Description

Data Retained

Relating to CLEC Experience

- Report Month
- Record of LSRs Received by CC, PON and Ver
- Record of Timestamp, Type, Err # and Note or Error Description for Each LSR by CC, PON and Ver

Relating to BellSouth Performance

- Not Applicable

SQM Disaggregation - Analog/Benchmark

SQM Level of Disaggregation	SQM Analog/Benchmark
• Not Applicable	Not Applicable

SEEM Measure

SEEM	Tier I	Tier II
No		

SEEM Disaggregation - Analog/Benchmark

SEEM Disaggregation	SEEM Analog/Benchmark
• Not Applicable	Not Applicable

O-7: Percent Rejected Service Requests

Definition

Percent Rejected Service Request is the percent of total Service Requests [(Local Service Requests (LSRs) or Access Service Requests (ASRs)] received which are rejected due to error or omission. Service Requests are considered valid when they are submitted by the CLEC and pass edit checks to insure the data received is correctly formatted and complete.

Exclusions

- Service Requests canceled by the CLEC prior to being rejected/clarified.
- Fatal Rejects
- Order Activities of BellSouth or the CLEC associated with internal or administrative use of local services (Record Orders, Test Orders, etc.) where identifiable
- LSRs identified as "Projects"

Business Rules

Fully Mechanized: An LSR/Service Request is considered "rejected" when it is submitted electronically but does not pass edit checks in the ordering systems (EDI, LENS, TAG, LESOG, LNP Gateway, LAUTO) and is returned to the CLEC without manual intervention. There are two types of "Rejects" in the Mechanized category:

> A **Fatal Reject** occurs when a CLEC attempts to electronically submit an LSR but required fields are either not populated or incorrectly populated and the request is returned to the CLEC before it is considered a valid LSR.
>
> Fatal rejects are reported in a separate column, and for informational purposes ONLY. They are not considered in the calculation of the percent of total LSRs rejected or the total number of rejected LSRs.
>
> An **Auto Clarification** occurs when a valid LSR is electronically submitted but rejected from LESOG or LAUTO because it does not pass further edit checks for order accuracy.

Partially Mechanized: A valid LSR, which is electronically submitted (via EDI, LENS, TAG) but cannot be processed electronically and "falls out" for manual handling. It is then put into "clarification" and sent back (rejected) to the CLEC.

Non-Mechanized: LSRs which are faxed or mailed to the LCSC for processing and "clarified" (rejected) back to the CLEC by the BellSouth service representative.

Interconnection Trunks: Interconnection Trunks are ordered on Access Service Requests (ASRs). ASRs are submitted to and processed by the Local Interconnection Service Center (LISC). Trunk data is reported as a separate category.

Calculation

Percent Rejected Service Requests = (a / b) X 100

- a = Total Number of Service Requests Rejected in the reporting period
- b = Total Number of Service Requests Received in the reporting period

Report Structure

- Fully Mechanized, Partially Mechanized, Non-Mechanized
- Trunks
- CLEC Specific
- CLEC Aggregate
- Geographic Scope
  - State

- Region
- Product Specific percent Rejected
- Total percent Rejected

Data Retained

Relating to CLEC Experience

- Report Month
- Total Number of LSRs
- Total Number of Rejects
- State and Region
- Total Number of ASRs (Trunks)

Relating to BellSouth Performance

- Not Applicable

SQM Disaggregation - Analog/Benchmark

SQM Level of Disaggregation	SQM Analog/Benchmark
Mechanized, Partially Mechanized and Non-Mechanized	
Resale – Residence	Diagnostic
Resale - Business	
Resale – Design (Special)	
Resale PBX	
Resale Centrex	
Resale ISDN	
LNP (Standalone)	
INP (Standalone)	
2W Analog Loop Design	
2W Analog Loop Non-Design	
2W Analog Loop with INP Design	
2W Analog Loop with INP Non-Design	
2W Analog Loop with LNP Design	
2W Analog Loop with LNP Non-Design	
UNE Digital Loop < DS1	
UNE Digital Loop >= DS1	
UNE Loop + Port Combinations	
UNE Combination Other	
UNE ISDN Loop	
UNE Other Design	
UNE Other Non-Design	
UNE Line Splitting	
EELs	
Switch Ports	
UNE xDSL (ADSL, HDSL, UCL)	
Line Sharing	
Local Interoffice Transport	
Local Interconnection Trunks	

SEEM Measure

SEEM	Tier I	Tier II
No		

SEEM Disaggregation - Analog/Benchmark

SEEM Disaggregation	SEEM Analog/Benchmark
• Not Applicable	Not Applicable

O-8: Reject Interval

Definition

Reject Interval is the average reject time from receipt of Service Requests [(Local Service Requests (LSRs) or Access Service Requests (ASRs)] to the distribution of a Reject. Service Requests are considered valid when they are submitted by the CLEC and pass edit checks to insure the data received is correctly formatted and complete. When there are multiple rejects on a single version of an LSR, the first reject issued is used for the calculation of the interval duration.

Exclusions

- Service Requests canceled by CLEC prior to being rejected/clarified.
- Fatal Rejects
- Designated Holidays are excluded from the interval calculation for partially mechanized and non-mechanized LSRs/ASRs only.
- LSRs which are identified and classified as "Projects"

  Non-business hours for Partially Mechanized and Non-Mechanized LSRs are excluded from the interval calculation. The excluded time is the time outside of normal operations which can be found at the following website: http://www.interconnection.bellsouth.com/centers/html/lcsc.html

  Local Interconnection Service Center (LISC) - Monday through Friday 4:30 PM until 8:00 AM
  From 4:30 PM Friday until 8:00 AM Monday

  The hours excluded will be altered to reflect changes in the Center operating hours. The LCSC will accept faxed LSRs only during posted hours of operation.

  The interval will be the amount of time accrued from receipt of the LSR until normal closing of the center if an LSR is worked using overtime hours.

  In the case of a Partially Mechanized LSR received and worked after normal business hours, the interval will be set at one (1) minute.

Business Rules

The Reject interval is determined for each rejected LSR processed during the reporting period. The Reject interval is the elapsed time from when BellSouth receives LSR (date and time stamps in EDI or TAG) until that LSR is rejected back to the CLEC. Elapsed time for each LSR (date and time stamps in EDI or TAG) is accumulated for each reporting dimension. The accumulated time for each reporting dimension is then divided by the associated total number of rejected LSRs to produce the reject interval distribution.

Fully Mechanized: The elapsed time from receipt of a valid electronically submitted LSR (date and time stamp in EDI translator or TAG) until the LSR is rejected (date and time stamp or reject in EDI translator, or TAG). Auto Clarifications are considered in the Fully Mechanized category.

Partially Mechanized: The elapsed time from receipt of a valid electronically submitted LSR (date and time stamp in EDI translator or TAG) until it falls out for manual handling. The stop time on partially mechanized LSRs is when the LCSC Service Representative clarifies the LSR back to the CLEC via EDI translator, or TAG.

Non-Mechanized: The elapsed time from receipt of a valid LSR (date and time stamp of FAX or date and time mailed LSR is received in the LCSC) until notice of the reject (clarification) is returned to the CLEC via LON.

Interconnection Trunks: Interconnection Trunks are ordered on Access Service Requests (ASRs). ASRs are submitted to and processed by the Local Interconnection Service Center (LISC). Trunk data is reported as a separate category.

Calculation

Reject Interval = (a - b)

- a = Date and Time of Service Request Rejection
- b = Date and Time of Service Request Receipt

Average Reject Interval = (c / d)

- c = Sum of all Reject Intervals
- d = Number of Service Requests Rejected in Reporting Period

Reject Interval Distribution = (e / f) X 100

- e = Service Requests Rejected in reported interval
- f = Total Number of Service Requests Rejected in Reporting Period

Report Structure

- Fully Mechanized, Partially Mechanized, Non-Mechanized
- CLEC Specific
- CLEC Aggregate
- Geographic Scope
  - State
  - Region
- Fully Mechanized:
  0 - <= 4 minutes
  > 4 - <= 8 minutes
  >8 - <= 12 minutes
  > 12 - <= 60 minutes
  0 - <= 1 hour
  > 1 - <= 4 hours
  > 4 - <= 8 hours
  > 8 - <= 12 hours
  > 12 - <= 16 hours
  > 16 - <= 20 hours
  > 20 - <= 24 hours
  > 24 hours
- Partially Mechanized:
  0 - <= 1 hour
  > 1 - <= 4 hours
  > 4 - <= 8 hours
  > 8 - <= 10 hours
  0 - <= 10 hours
  > 10 - <= 18 hours
  0 - <= 18 hours
  > 18 - <= 24 hours
  > 24 hours
- Non-mechanized:
  0 - <= 1 hour
  > 1 - <= 4 hours
  > 4 - <= 8 hours
  > 8 - <= 12 hours
  > 12 - <= 16 hours
  > 16 - <= 20 hours
  > 20 - <= 24 hours
  0 - <= 24 hours
  > 24 hours
- Trunks:

0 - <= 36 hours
> 36 hours
- Average Interval is reported in business hours.

Data Retained

Relating to CLEC Experience

- Report Month
- Reject Interval
- Total Number of LSRs
- Total Number of Rejects
- State and Region
- Total Number of ASRs (Trunks)

Relating to BellSouth Performance

- Not Applicable

SQM Disaggregation - Analog/Benchmark

SQM Level of Disaggregation	SQM Analog/Benchmark
Resale – Residence	Fully Mechanized: 97% <= 1 Hour
Resale – Business	Partially Mechanized: 95% <= 10 Hours
Resale – Design (Special)	Non Mechanized: 95% <= 24 Hours
Resale PBX	
Resale Centrex	
Resale ISDN	
LNP (Standalone)	
INP (Standalone)	
2W Analog Loop Design	
2W Analog Loop Non-Design	
2W Analog Loop with INP Design	
2W Analog Loop with INP Non-Design	
2W Analog Loop with LNP Design	
2W Analog Loop with LNP Non-Design	
UNE Digital Loop < DS1	
UNE Digital Loop >= DS1	
UNE Loop + Port Combinations	
UNE Combination Other	
UNE ISDN Loop	
UNE Other Design	
UNE Other Non-Design	
UNE Line Splitting	
EELs	
Switch Ports	
UNE xDSL (ADSL, HDSL, UCL)	
Line Sharing	
Local Interoffice Transport	
Local Interconnection Trunks	Trunks: 95% <= 36 Hours

SEEM Measure

SEEM	Tier I	Tier II
Yes	X	X

SEEM Disaggregation - Analog/Benchmark

SEEM Disaggregation	SEEM Analog/Benchmark
• Fully Mechanized	97% <= 1 hour
• Partially Mechanized	95% <= 10 hours
• Non-Mechanized	95% <= 24 hours
• Local Interconnection Trunks	95% <= 36 hours

O-9: Firm Order Confirmation Timeliness

Definition

Interval for Return of a Firm Order Confirmation (FOC Interval) is the average response time from receipt of valid LSR or ASR to distribution of a Firm Order Confirmation. The interval will include an electronic facilities check.

Exclusions

- Service Requests canceled by CLEC prior to being confirmed.
- Designated Holidays are excluded from the interval calculation for partially mechanized and non-mechanized LSRs/ASRs only.
- LSRs which are identified and classified as "Projects"

  Non-business hours for Partially Mechanized and Non-Mechanized LSRs are excluded from the interval calculation. The excluded time is the time outside of normal operations which can be found at the following website: http://www.interconnection.bellsouth.com/centers/html/lcsc.html

  For ASRs processed in the Local Interconnection Service Center (LISC) - From 4:30 PM All hours outside of Monday – Friday 8:00 AM – 4:30 PM CST, should be excluded.

  The hours excluded will be altered to reflect changes in the Center operating hours. The Centers will accept faxed LSRs only during posted hours of operation.

  The interval will be the amount of time accrued from receipt of the LSR until normal closing of the center if an LSR is worked using overtime hours.

  In the case of a Partially Mechanized LSR received and worked after normal business hours, the interval will be set at one (1) minute.

Business Rules

Fully Mechanized: The elapsed time from receipt of a valid electronically submitted LSR (date and time stamp in EDI or TAG) until the LSR is processed, appropriate service orders are generated and a Firm Order Confirmation is returned to the CLEC via EDI translator or TAG.

Partially Mechanized: The elapsed time from receipt of a valid electronically submitted LSR (date and time stamp in EDI, or TAG) which falls out for manual handling until appropriate service orders are issued by a BellSouth service representative via Direct Order Entry (DOE) or Service Order Negotiation Generation System (SONGS) to SOCS and a Firm Order Confirmation is returned to the CLEC via EDI translator, or TAG.

Non-Mechanized: The elapsed time from receipt of a valid paper LSR (date and time stamp of FAX or date and time paper LSRs received in LCSC) until appropriate service orders are issued by a BellSouth service representative via Direct Order Entry (DOE) or Service Order Negotiation Generation System (SONGS) to SOCS and a Firm Order Confirmation is sent to the CLEC via LON.

Interconnection Trunks: Interconnection Trunks are ordered on Access Service Requests (ASRs). ASRs are submitted to and processed by the Local Interconnection Service Center (LISC). The elapsed time is measured from receipt of a valid ASR (date and time stamp of a FAX or paper ASR received in the LISC) until the appropriate orders are issued by a BellSouth representative and a FOC issued in EXACT. Trunk data is reported as a separate category.

Note: When multiple FOCs occur on a single version of an LSR, the first FOC is used to measure the interval.

Calculation

Firm Order Confirmation Interval = (a - b)

- a = Date and Time of Firm Order Confirmation
- b = Date and Time of Service Request Receipt

Average FOC Interval = (c / d)

- c = Sum of all Firm Order Confirmation Times
- d = Number of Service Requests Confirmed in Reporting Period

FOC Interval Distribution = (e / f) X 100

- e = Service Requests Confirmed in Designated Interval
- f = Total Service Requests Confirmed in the Reporting Period

Report Structure

- Fully Mechanized, Partially Mechanized, Non-Mechanized
  - CLEC Specific
  - CLEC Aggregate
- Geographic Scope
  - State
  - Region
- Fully Mechanized:
  0 - <= 15 minutes
  > 15 - <= 30 minutes
  > 30 - <= 45 minutes
  > 45 - <= 60 minutes
  > 60 - <= 90 minutes
  > 90 - <= 120 minutes
  > 120 - <= 180 minutes
  0 - <= 3 hours
  > 3 - <= 6 hours
  > 6 - <= 12 hours
  > 12 - <= 24 hours
  > 24 - <= 48 hours
  > 48 hours
- Partially Mechanized:
  0 - <= 4 hours
  > 4 - <= 8 hours
  > 8 - <= 10 hours
  0 - <= 10 hours
  > 10 - <= 18 hours
  0 - <= 18 hours
  > 18 - <= 24 hours
  > 24 - <= 48 hours
  > 48 hours
- Non-mechanized:
  0 - <= 4 hours
  > 4 - <= 8 hours
  > 8 - <= 12 hours
  > 12 - <= 16 hours
  0 - <= 24 hours
  > 16 - <= 20 hours
  > 20 - <= 24 hours
  > 24 - <= 36 hours
  0 - <= 36 hours

> 36 - <= 48 hours
> 48 hours

- Trunks:
  0 - <= 48 hours
  > 48 hours
- Average Interval is reported in business hours

Data Retained

Relating to CLEC Experience

- Report Month
- Interval for FOC
- Total Number of LSRs
- State and Region
- Total Number of ASRs (Trunks)

Relating to BellSouth Performance

- Not Applicable

SQM Disaggregation - Analog/Benchmark

SQM Level of Disaggregation	SQM Analog/Benchmark
Resale – Residence	Fully Mechanized: 95% <= 3 Hours
Resale – Business	Partially Mechanized: 95% <= 10 Hours
Resale – Design (Special)	Non-Mechanized: 95% <= 24 Hours
Resale PBX	
Resale Centrex	
Resale ISDN	
LNP (Standalone)	
INP (Standalone)	
2W Analog Loop Design	
2W Analog Loop Non-Design	
2W Analog Loop with INP Design	
2W Analog Loop with INP Non-Design	
2W Analog Loop with LNP Design	
2W Analog Loop with LNP Non-Design	
UNE Digital Loop < DS1	
UNE Digital Loop >= DS1	
UNE Loop + Port Combinations	
UNE Combination Other	
UNE ISDN Loop	
UNE Other Design	
UNE Other Non-Design	
UNE Line Splitting	
EELs	
Switch Ports	
UNE xDSL (ADSL, HDSL, UCL)	
Line Sharing	
Local Interoffice Transport	
Local Interconnection Trunks	Trunks: 95% <= 48 Hours

SEEM Measure

SEEM	Tier I	Tier II
Yes	X	X

SEEM Disaggregation - Analog/Benchmark

SEEM Disaggregation	SEEM Analog/Benchmark
• Fully Mechanized	95% <= 3 Hours
• Partially Mechanized	95% <= 10 Hours
• Non-Mechanized	95% <= 24 Hours
• Local Interconnection Trunks	95% <= 48 Hours

O-10: Service Inquiry with LSR Firm Order Confirmation (FOC) Response Time Manual[1]

Definition

This report measures the interval and the percent within the interval from the submission of a Service Inquiry (SI) with Firm Order LSR to the distribution of a Firm Order Confirmation (FOC).

Exclusions

- Designated Holidays are excluded from the interval calculation.
- Weekend hours from 5:00 PM Friday until 8:00AM Monday are excluded from the interval calculation of the Service Inquiry.
- Canceled Requests
- Electronically Submitted Requests
- Non-business hours for Partially Mechanized and Non-Mechanized LSRs are excluded from the interval calculation. The excluded time is the time outside of normal operations which can be found at the following website: http//www.interconnection.bellsouth.com/centers/html/lcsc.html

Business Rules

This measurement combines four intervals:

1. From receipt of a valid Service Inquiry with LSR to hand off to the Service Advocacy Center (SAC) for Loop 'Look-up'.
2. From SAC start date to SAC complete date.
3. From SAC complete date to the Complex Resale Support Group (CRSG) complete date with hand off to LCSC.
4. From receipt of a valid SI/LSR in the LCSC to Firm Order Confirmation.

(A valid Service Inquiry is an inquiry that has all required fields populated correctly and has not been returned for clarification.)

Calculation

FOC Timeliness Interval with SI = (a - b)

- a = Date and Time Firm Order Confirmation (FOC) for SI with LSR returned to CLEC
- b = Date and Time SI with LSR received

Average Interval = (c / d)

- c = Sum of all FOC Timeliness Intervals with SI
- d = Total number of SIs with LSRs received in the reporting period

Percent Within Interval = (e / f) X 100

- e = Total number of Service Inquiries with LSRs received by the CRSG to distribution of FOC by the Local Carrier Service Center (LCSC)
- f = Total number of Service Inquiries with LSRs received in the reporting period

Report Structure

- CLEC Aggregate
- CLEC Specific
- Geographic Scope
  - State
  - Region

[1] *See O-9 for FOC Timeliness*

- Intervals
  0 – <= 3 days
  > 3 – <= 5 days
  0 – <=5 days
  > 5 – <= 7 days
  > 7 – <= 10 days
  > 10 – <= 15 days
  >15 days
- Average Interval measured in days

Data Retained

Relating to CLEC Experience

- Report Month
- Total Number of Requests
- SI Intervals
- State and Region

Relating to BellSouth Performance

- Not Applicable

SQM Disaggregation - Analog/Benchmark

SQM Level of Disaggregation	SQM Analog/Benchmark
• xDSL (includes UNE unbundled ADSL, HDSL and UNE Unbundled Copper Loops)	95% Returned <= 5 Business Days
• Unbundled Interoffice Transport	

SEEM Measure

SEEM	Tier I	Tier II
No		

SEEM Disaggregation - Analog/Benchmark

SEEM Disaggregation	SEEM Analog/Benchmark
• Not Applicable	Not Applicable

O-11: Firm Order Confirmation and Reject Response Completeness

Definition

A response is expected from BellSouth for every Local Service Request transaction (version). Firm Order Confirmation and Reject Response Completeness is the corresponding number of Local Service Requests received to the combination of Firm Order Confirmation and Reject Responses.

Exclusions

- Service Requests canceled by the CLEC prior to FOC or Rejected/Clarified
- Fatal Rejects
- LSRs identified as "Projects"

Business Rules

Mechanized – The number of FOCs or Auto Clarifications sent to the CLEC from EDI, or TAG in response to electronically submitted LSRs.

Partially Mechanized – The number of FOCs or Rejects sent to the CLEC from EDI, or TAG in response to electronically submitted LSRs which fall out for manual handling by the LCSC personnel.

Non-Mechanized: The number of FOCs or Rejects sent to the CLECs by FAX server.

Interconnection Trunks: Interconnection Trunks are ordered on Access Service Requests (ASRs). ASRs are submitted to and processed by the Local Interconnection Service Center (LISC). Trunk data is reported as a separate category.

For CLEC Results:

Percent responses is determined by computing the number of Firm Order Confirmations and Rejects transmitted by BellSouth and dividing by the number of Local Service Requests (all versions) received in the reporting period.

Calculation

Firm Order Confirmation / Reject Response Completeness = (a / b) X 100

- a = Total Number of Service Requests for which a Firm Order Confirmation or Reject is Sent
- b = Total Number of Service Requests Received in the Report Period

Report Structure

Fully Mechanized, Partially Mechanized, Non-Mechanized and Interconnection Trunks

- State and Region
- CLEC Specific
- CLEC Aggregate

Data Retained

Relating to CLEC Experience

- Report Month
- Total Number of LSRs
- Total Number of rejects

- Total Number of ASRs (Trunks)
- Total Number of FOCs

Relating to BellSouth Performance

- Not Applicable

SQM Disaggregation - Analog/Benchmark

SQM Level of Disaggregation	SQM Analog/Benchmark
Resale Residence	95% Returned
Resale Business	
Resale Design (Special)	
Resale PBX	
Resale Centrex	
Resale ISDN	
LNP (Standalone)	
INP (Standalone)	
2W Analog Loop Design	
2W Analog Loop Non-Design	
2W Analog Loop with INP Design	
2W Analog Loop with INP Non-Design	
2W Analog Loop with LNP Design	
2W Analog Loop with LNP Non-Design	
UNE Digital Loop < DS1	
UNE Digital Loop >= DS1	
UNE Loop + Port Combinations	
UNE Combination Other	
UNE ISDN Loop	
UNE Other Design	
UNE Other Non-Design	
UNE Line Splitting	
EELs	
Switch Ports	
UNE xDSL (ADSL, HDSL, UCL)	
Line Sharing	
Local Interoffice Transport	
Local Interconnection Trunks	

SEEM Measure

SEEM	Tier I	Tier II
Yes	X	X

SEEM Disaggregation - Analog/Benchmark

SEEM Disaggregation	SEEM Analog/Benchmark
Fully Mechanized	95% Returned
Partially Mechanized	
Non-Mechanized	
Local Interconnection Trunks	

O-12: Speed of Answer in Ordering Center

Definition

Measures the average time a customer is in queue.

Exclusions

None

Business Rules

The clock starts when the appropriate option is selected (i.e., 1 for Resale Consumer, 2 for Resale Multiline, and 3 for UNE-LNP, etc.) and the call enters the queue for that particular group in the LCSC. The clock stops when a BellSouth service representative in the LCSC answers the call. The speed of answer is determined by measuring and accumulating the elapsed time from the entry of a CLEC call into the BellSouth automatic call distributor (ACD) until a service representative in BellSouth's Local Carrier Service Center (LCSC) answers the CLEC call.

Calculation

Speed of Answer in Ordering Center = (a / b)

- a = Total seconds in queue
- b = Total number of calls answered in the Reporting Period

Report Structure

Aggregate

- CLEC – Local Carrier Service Center
- BellSouth
  - Business Service Center
- Geographic Scope
  - Region

Data Retained

Relating to CLEC Experience

- Mechanized Tracking Through LCSC Automatic Call Distributor

Relating to BellSouth Performance

- Mechanized Tracking Through BellSouth Retail Center Support System

SQM Disaggregation - Analog/Benchmark

SQM Level of Disaggregation	SQM Analog/Benchmark
Aggregate	
• CLEC – Local Carrier Service Center	Parity with Retail (Business Service Center)

SEEM Measure

SEEM	Tier I	Tier II
Yes		X

SEEM Disaggregation - Analog/Benchmark

SEEM Disaggregation	SEEM Analog/Benchmark
• CLEC - Local Carrier Service Center	Parity with Retail (Business Service Center)

Section 3: Provisioning

P-1: Mean Held Order Interval & Distribution Intervals

Definition

When delays occur in completing CLEC orders, the average period that CLEC orders are held for BellSouth reasons, pending a delayed completion, should be no worse for the CLEC when compared to BellSouth delayed orders. Calculation of the interval is the total days orders are held and pending but not completed that have passed the currently committed due date; divided by the total number of held orders. This report is based on orders still pending, held and past their committed due date. The distribution interval is based on the number of orders held and pending but not completed over 15 and 90 days. (Orders reported in the >90 day interval are also included in the >15 day interval.)

Exclusions

- Order Activities of BellSouth or the CLEC associated with internal or administrative use of local services (Record Orders, Listing Orders, Test Orders, etc.) Test order types may be C, N, R, or T
- Disconnect (D) & From (F) orders
- Orders with Appointment Code of 'A', i.e., orders for locations requiring special construction including locations where no address exists and a technician must make a field visit to determine how to get facilities to the location.

Business Rules

Mean Held Order Interval: This metric is computed at the close of each report period. The held order interval is established by first identifying all orders, at the close of the reporting interval, that both have not been reported as completed in SOCS and have passed the currently committed due date for the order and identifying all orders that have been reported as completed in SOCS after the currently committed due date for the order. For each such order, the number of calendar days between the earliest committed due date on which BellSouth had a company missed appointment and the close of the reporting period is established and represents the held order interval for that particular order. The held order interval is accumulated by the standard groupings, unless otherwise noted, and the reason for the order being held. The total number of days accumulated in a category is then divided by the number of held orders within the same category to produce the mean held order interval. The interval is by calendar days with no exclusions for Holidays or Sundays.

CLEC Specific reporting is by type of held order (facilities, equipment, other), total number of orders held, and the total and average days.

Held Order Distribution Interval: This measure provides data to report total days held and identifies these in categories of >15 days and > 90 days. (Orders counted in >90 days are also included in > 15 days).

Calculation

Mean Held Order Interval = a / b

- a = Sum of held-over-days for all Past Due Orders Held with a BellSouth Missed Appointment from the earliest BellSouth missed appointment
- b = Number of Past Due Orders Held and Pending But Not Completed and past the committed due date

Held Order Distribution Interval (for each interval) = (c / d) X 100

- c = # of Orders Held for >= 15 days or # of Orders Held for >= 90 days
- d = Total # of Past Due Orders Held and Pending But Not Completed)

Report Structure

- CLEC Specific
- CLEC Aggregate
- BellSouth Aggregate
- Circuit Breakout < 10, >= 10 (except trunks)
- Dispatch/Non-Dispatch
- Geographic Scope
  - State
  - Region

Data Retained

Relating to CLEC Experience

- Report Month
- CLEC Order Number and PON (PON)
- Order Submission Date (TICKET_ID)
- Committed Due Date (DD)
- Service Type (CLASS_SVC_DESC)
- Hold Reason
- Total Line/Circuit Count
- Geographic Scope

Note: Code in parentheses is the corresponding header found in the raw data file.

Relating to BellSouth Performance

- Report Month
- BellSouth Order Number
- Order Submission Date
- Committed Due Date
- Service Type
- Hold Reason
- Total Line/Circuit Count
- Geographic Scope

SQM Disaggregation - Analog/Benchmark

SQM Level of Disaggregation	SQM Analog/Benchmark
Resale Residence	Retail Residence
Resale Business	Retail Business
Resale Design	Retail Design
Resale PBX	Retail PBX
Resale Centrex	Retail Centrex
Resale ISDN	Retail ISDN
LNP (Standalone)	Retail Residence and Business (POTS)
INP (Standalone)	Retail Residence and Business (POTS)
2W Analog Loop Design	Retail Residence and Business Dispatch
2W Analog Loop Non-Design	Retail Residence and Business – (POTS Excluding Switch-Based Orders)
2W Analog Loop with LNP - Design	Retail Residence and Business Dispatch
2W Analog Loop with LNP- Non-Design	Retail Residence and Business – (POTS Excluding Switch-Based Orders)
2W Analog Loop with INP-Design	Retail Residence and Business Dispatch
2W Analog Loop with INP-Non-Design	Retail Residence and Business – (POTS Excluding Switch-Based Orders)

- UNE Digital Loop < DS1 ..... Retail Digital Loop < DS1
- UNE Digital Loop >= DS1 ..... Retail Digital Loop >= DS1
- UNE Loop + Port Combinations ..... Retail Residence and Business
  - Dispatch In ..... - Dispatch
  - Switch Based ..... - Switched Based
- UNE Switch Ports ..... Retail Residence and Business (POTS)
- UNE Combo Other ..... Retail Residence, Business and Design Dispatch
- UNE xDSL (HDSL, ADSL and UCL) ..... ADSL Provided to Retail
- UNE ISDN (Includes UDC) ..... Retail ISDN - BRI
- UNE Line Sharing ..... ADSL Provided to Retail
- UNE Other Design ..... Retail Design
- UNE Other Non-Design ..... Retail Residence and Business
- Local Transport (Unbundled Interoffice Transport) ..... Retail DS1/DS3 Interoffice
- Local Interconnection Trunks ..... Parity with Retail
- UNE Line Splitting ..... ADSL to Retail
- EELs ..... Retail DS1/DS3

SEEM Measure

SEEM	Tier I	Tier II
No		

SEEM Disaggregation - Analog/Benchmark

SEEM Disaggregation	SEEM Analog/Benchmark
• Not Applicable	Not Applicable

P-2: Average Jeopardy Notice Interval & Percentage of Orders Given Jeopardy Notices

(Deleted)

P-2A: Jeopardy Notice Interval

Definition

When BellSouth can determine in advance that a committed due date is in jeopardy for facility delay, it will provide advance notice to the CLEC.

The interval is from the date/time the notice is released to the CLEC/BellSouth systems until 5pm on the due date of the order.

Exclusions

- Orders held for CLEC end user reasons
- Disconnect (D) and From (F) orders
- Orders with Jeopardy Notice when jeopardy is identified on the due date. This exclusion only applies when the technician on premises has attempted to provide service but must refer to Engineer or Cable Repair for facility jeopardy.
- Orders issued with a due date of < = 48 hours.

Business Rules

When BellSouth can determine in advance that a committed due date is in jeopardy for facility delay, it will provide advance notice to the CLEC. The number of committed orders in a report period is the number of orders that have a due date in the reporting period. Jeopardy notices for interconnection trunk results are usually zero as these trunks seldom experience facility delays. The Committed Due Date is considered the Confirmed Due Date. This report measures dispatched orders only. If an order is originally sent as non-dispatch and it is determined there is a facility delay, the order is converted to a dispatch code so the facility problem can be corrected. It will remain coded dispatched until completion.

Calculation

Jeopardy Interval = a - b

- a = Date and Time of Scheduled Due Date on Service Order
- b = Date and Time of Jeopardy Notice

Average Jeopardy Interval = c / d

- c = Sum of all Jeopardy Intervals
- d = Number of Orders Notified of Jeopardy in Reporting Period

Report Structure

- CLEC Specific
- CLEC Aggregate
- BellSouth Aggregate
- Mechanized Orders
- Non-Mechanized Orders
- Dispatch/Non-Dispatch
- Geographic Scope
  - State
  - Region

Data Retained

Relating to CLEC Experience

- Report Month
- CLEC Order Number and PON

- Date and Time Jeopardy Notice Sent
- Committed Due Date
- Service Type

Relating to BellSouth Performance

- Report Month
- BellSouth Order Number
- Date and Time Jeopardy Notice Sent
- Committed Due Date
- Service Type

SQM Disaggregation - Analog/Benchmark

SQM Level of Disaggregation	SQM Analog/Benchmark
• Resale Residence	95% > = 48 hours
• Resale Business	95% > = 48 hours
• Resale Design	95% > = 48 hours
• Resale PBX	95% > = 48 hours
• Resale Centrex	95% > = 48 hours
• Resale ISDN	95% > = 48 hours
• LNP (Standalone)	95% > = 48 hours
• INP (Standalone)	95% > = 48 hours
• 2W Analog Loop Design	95% > = 48 hours
• 2W Analog Loop Non-Design	95% > = 48 hours
• 2W Analog Loop with LNP - Design	95% > = 48 hours
• 2W Analog Loop with LNP- Non-Design	95% > = 48 hours
• 2W Analog Loop with INP-Design	95% > = 48 hours
• 2W Analog Loop with INP-Non-Design	95% > = 48 hours
• UNE Digital Loop < DS1	95% > = 48 hours
• UNE Digital Loop >= DS1	95% > = 48 hours
• UNE Loop + Port Combinations	95% > = 48 hours
- Dispatch In	- Dispatch In
- Switch Based	- Switch Based
• UNE Switch Ports	95% > = 48 hours
• UNE Combo Other	95% > = 48 hours
• UNE xDSL (HDSL, ADSL and UCL)	95% > = 48 hours
• UNE ISDN (Includes UDC)	95% > = 48 hours
• UNE Line Sharing	95% > = 48 hours
• UNE Other Design	95% > = 48 hours
• UNE Other Non-Design	95% > = 48 hours
• Local Transport (Unbundled Interoffice Transport)	95% > = 48 hours
• Local Interconnection Trunks	95% > = 48 hours
• UNE Line Splitting	95% > = 48 hours
• EELs	95% > = 48 hours

SEEM Measure

SEEM	Tier I	Tier II
No		

SEEM Disaggregation	SEEM Analog/Benchmark
• Not Applicable	Not Applicable

P-2B: Percentage of Orders Given Jeopardy Notices

Definition

When BellSouth can determine in advance that a committed due date is in jeopardy for facility delay, it will provide advance notice to the CLEC.

The Percent of Orders is the percentage of orders given jeopardy notices for facility delay in the count of orders confirmed in the report period.

Exclusions

- Orders held for CLEC end user reasons
- Disconnect (D) and From (F) orders

Business Rules

When BellSouth can determine in advance that a committed due date is in jeopardy for facility delay, it will provide advance notice to the CLEC. The number of committed orders in a report period is the number of orders that have a due date in the reporting period. Jeopardy notices for interconnection trunks results are usually zero as these trunks seldom experience facility delays. The Committed due date is considered the Confirmed due date. This report measures dispatched orders only. If an order is originally sent as non-dispatch and it is determined there is a facility delay, the order is converted to a dispatch code so the facility problem can be corrected. It will remain coded dispatched until completion.

Calculation

Percent of Orders Given Jeopardy Notice = (a / b) X 100

- a = Number of Orders Given Jeopardy Notices in Reporting Period
- b = Number of Orders Confirmed (due) in Reporting Period

Percent of Orders Given Jeopardy Notice > = 48 hours = (c / d) X 100

- c = Number of Orders Given Jeopardy Notice >= 48 hours in Reporting Period (electronic only)
- d = Number of Orders Given Jeopardy Notices in Reporting Period (electronic only)

Report Structure

- CLEC Specific
- CLEC Aggregate
- BellSouth Aggregate
- Mechanized Orders
- Non-Mechanized Orders
- Dispatch/Non-Dispatch
- Geograhic Scope
  - State
  - Region

Data Retained

Relating to CLEC Experience

- Report Month
- CLEC Order Number and PON

- Date and Time Jeopardy Notice sent
- Committed Due Date
- Service Type

Relating to BellSouth Performance

- Report Month
- BellSouth Order Number
- Date and Time Jeopardy Notice sent
- Committed Due Date
- Service Type

SQM Disaggregation - Analog/Benchmark

SQM Level of Disaggregation	SQM Analog/Benchmark
• Resale Residence	Retail Residence
• Resale Business	Retail Business
• Resale Design	Retail Design
• Resale PBX	Retail PBX
• Resale Centrex	Retail Centrex
• Resale ISDN	Retail ISDN
• LNP (Standalone)	Retail Residence and Business (POTS)
• INP (Standalone)	Retail Residence and Business (POTS)
• 2W Analog Loop Design	Retail Residence and Business Dispatch
• 2W Analog Loop Non-Design	Retail Residence and Business – (POTS Excluding Switch-Based Orders)
• 2W Analog Loop with LNP - Design	Retail Residence and Business Dispatch
• 2W Analog Loop with LNP - Non-Design	Retail Residence and Business – (POTS Excluding Switch-Based Orders)
• 2W Analog Loop with INP-Design	Retail Residence and Business Dispatch
• 2W Analog Loop with INP-Non-Design	Retail Residence and Business – (POTS Excluding Switch-Based Orders)
• UNE Digital Loop <DS1	Retail Digital Loop <DS1
• UNE Digital Loop >=DS1	Retail Digital Loop >=DS1
• UNE Loop + Port Combinations	Retail Residence and Business
- Dispatch In	- Dispatch In
- Switch Based	- Switch Based
• UNE Switch Ports	Retail Residence and Business (POTS)
• UNE Combo Other	Retail Residence, Business and Design Dispatch
• UNE xDSL (HDSL, ADSL and UCL)	ADSL Provided to Retail
• UNE ISDN (Includes UDC)	Retail ISDN - BRI
• UNE Line Sharing	ADSL Provided to Retail
• UNE Other Design	Retail Design
• UNE Other Non-Design	Retail Residence and Business
• Local Transport (Unbundled Interoffice Transport)	Retail DS1/DS3 Interoffice
• Local Interconnection Trunks	Parity with Retail
• UNE Line Splitting	ADSL Provided to Retail
• EELs	Retail DS1/DS3

SEEM Measure

SEEM	Tier I	Tier II
No		

SEEM Disaggregation	SEEM Analog/Benchmark
• Not Applicable	Not Applicable

P-3: Percent Missed Initial Installation Appointments

Definition

"Percent missed initial installation appointments" monitors the reliability of BellSouth commitments with respect to committed due dates to assure that the CLEC can reliably quote expected due dates to their retail customer as compared to BellSouth. This measure is the percentage of total orders processed for which BellSouth is unable to complete the service orders on the committed due dates and reported for Total misses and End User Misses.

Exclusions

- Orders canceled prior to the due date including orders that are to be provisioned on the same day they are placed. ("Zero Due Date Orders")
- Order Activities of BellSouth or the CLEC associated with internal or administrative use of local services (Record Orders, Listing Orders Test Orders, etc., Order types may be coded C, N, R or T)
- Disconnect (D) & From (F) orders
- End User Misses

Business Rules

Percent Missed Initial Installation Appointments (PMI) is the percentage of orders with completion dates in the reporting period that are past the original committed due date. Missed Appointments caused by end-user reasons will be excluded and reported separately. The first commitment date on the service order that is a missed appointment is the missed appointment code used for calculation whether it is a BellSouth missed appointment or an End User missed appointment. The "due date" is any time on the confirmed due date. Which means there cannot be a cutoff time for commitments, as certain types of orders are requested to be worked after standard business hours. Also, during Daylight Savings Time, field technicians are scheduled until 9PM in some areas and the customer is offered a greater range of intervals from which to select.

Calculation

Percent Missed Installation Appointments = (a / b) X 100

- a = Number of Orders with Completion date in Reporting Period past the Original Committed Due Date
- b = Number of Orders Completed in Reporting Period

Report Structure

- CLEC Specific
- CLEC Aggregate
- BellSouth Aggregate
- Report in Categories of <10 lines/circuits >= 10 lines/circuits (except trunks)
- Dispatch/Non-Dispatch (except Trunks)
- Geographic Scope
  - State
  - Region

Data Retained

Relating to CLEC Experience

- Report Month
- CLEC Order Number and PON (PON)
- Committed Due Date (DD)

- Completion Date (CMPLTN DD)
- Status Type
- Status Notice Date
- Standard Order Activity

Note: Code in parentheses is the corresponding header found in the raw data file.

Relatng to BellSouth Performance

- Report Month
- BellSouth Order Number
- Committed Due Date (DD)
- Completion Date (CMPLTN DD)
- Status Type
- Status Notice Date
- Standard Order Activity

SQM Disaggregation - Analog/Benchmark

SQM Level of Disaggregation	SQM Analog/Benchmark
Resale Residence	Retail Residence
Resale Business	Retail Business
Resale Design	Retail Design
Resale PBX	Retail PBX
Resale Centrex	Retail Centrex
Resale ISDN	Retail ISDN
LNP (Standalone)	Retail Residence and Business (POTS)
INP (Standalone)	Retail Residence and Business (POTS)
2W Analog Loop Design	Retail Residence and Business Dispatch
2W Analog Loop Non-Design	Retail Residence and Business – (POTS Excluding Switch- Based Orders)
2W Analog Loop With LNP - Design	Retail Residence and Business Dispatch
2W Analog Loop With LNP- Non-Design	Retail Residence and Business – (POTS Excluding Switch-Based Orders)
2W Analog Loop With INP-Design	Retail Residence and Business Dispatch
2W Analog Loop With INP-Non-Design	Retail Residence and Business – (POTS Excluding Switch-Based Orders)
UNE Digital Loop < DS1	Retail Digital Loop < DS1
UNE Digital Loop >= DS1	Retail Digital Loop >= DS1
UNE Loop + Port Combinations	Retail Residence and Business
- Dispatch In	- Dispatch In
- Switch Based	- Switched Based
UNE Switch Ports	Retail Residence and Business (POTS)
UNE Combo Other	Retail Residence, Business and Design Dispatch
UNE xDSL (HDSL, ADSL and UCL)	ADSL Provided to Retail
- Without Conditioning	- Without Conditioning
- With Conditioning	- With Conditioning (BellSouth does not offer this service to Retail)
UNE ISDN	Retail ISDN - BRI
UNE Line Sharing Without Conditioning	ADSL Provided to Retail
With Conditioning	ADSL Provided to Retail
UNE Other Design	Retail Design
UNE Other Non-Design	Retail Residence and Business
Local Transport (Unbundled Interoffice Transport)	Retail DS1/DS3 Interoffice
Local Interconnection Trunks	Parity with Retail
UNE Line Splitting Without Conditioning	ADSL Provided to Retail
With Conditioning	ADSL Provided to Retail
EELs	Retail DS1/DS3
UNE UDC/IDSL	Retail ISDN - BRI

SEEM Measure

SEEM	Tier I	Tier II
Yes	X	X

SEEM Disaggregation - Analog/Benchmark

SEEM Disaggregation	SEEM Analog/Benchmark
• Resale Residence	Retail Residence
• Resale Business	Retail Business
• Resale Design	Retail Design
• Resale PBX	Retail PBX
• Resale Centrex	Retail Centrex
• Resale ISDN	Retail ISDN
• LNP (Standalone)	Retail Residence and Business (POTS)
• INP (Standalone)	Retail Residence and Business (POTS)
• 2W Analog Loop Design	Retail Residence and Business Dispatch
• 2W Analog Loop Non-Design	Retail Residence and Business – (POTS Excluding Switch-Based Orders)
• 2W Analog Loop With LNP - Design	Retail Residence and Business Dispatch
• 2W Analog Loop With LNP- Non-Design	Retail Residence and Business – (POTS Excluding Switch-Based Orders)
• 2W Analog Loop With INP-Design	Retail Residence and Business Dispatch
• 2W Analog Loop With INP-Non-Design	Retail Residence and Business – (POTS Excluding Switch-Based Orders)
• UNE Digital Loop < DS1	Retail Digital Loop < DS1
• UNE Digital Loop >= DS1	Retail Digital Loop >=DS1
• UNE Loop + Port Combinations	Retail Residence and Business
- Dispatch In	- Dispatched In
- Switch Based	- Switch Based
• UNE Switch Ports	Retail Residence and Business (POTS)
• UNE Combo Other	Retail Residence, Business and Design Dispatch
• UNE xDSL (HDSL, ADSL and UCL)	ADSL Provided to Retail
- Without Conditioning	- Without Conditioning
- With Conditioning	- With Conditioning (BellSouth does not offer this service to Retail)
• UNE ISDN	Retail ISDN - BRI
• UNE Line Sharing Without Conditioning	ADSL Provided to Retail
With Conditioning	ADSL Provided to Retail
• Local Transport (Unbundled Interoffice Transport)	Retail DS1/DS3 Interoffice
• Local Interconnection Trunks	Parity with Retail
• UNE Line Splitting Without Conditioning	ADSL Provided to Retail
• With Conditioning	ADSL Provided to Retail
• UNE Other Design	Retail Design
• UNE Other Non-Design	Retail Residence and Business
• EELs	Retail DS1/DS3
• UNE UDC/IDSL	Retail ISDN - BRI

P-3A: Percent Missed Installation Appointments Including Subsequent Appointments

(Deleted)

P-4: Average Completion Interval (OCI) & Order Completion Interval Distribution

Definition

The "average completion interval" measure monitors the interval of time it takes BellSouth to provide service for the CLEC or its own customers. The "Order Completion Interval Distribution" provides the percentages of orders completed within certain time periods. This report measures how well BellSouth meets the interval offered to customers on service orders.

Exclusions

- Canceled Service Orders
- Order Activities of BellSouth or the CLEC associated with internal or administrative use of local services (Record Orders, Listing Orders, Test Orders, etc.)
- Disconnect (D & F) orders (Except "D" orders associated with LNP Standalone)
- "L" Appointment coded orders (where the customer has requested a later than offered interval)
- End user-caused misses

Business Rules

The actual completion interval is determined for each order processed during the reporting period. The completion interval is the elapsed time from when BellSouth issues a FOC or SOCS date time stamp receipt of an order from the CLEC to BellSouth's actual order completion date. The clock starts when a valid order number is assigned by SOCS and stops when the technician or system completes the order in SOCS. Elapsed time for each order is accumulated for each reporting dimension. The accumulated time for each reporting dimension is then divided by the associated total number of orders completed. Orders that are worked on zero due dates are calculated with a .33-day interval (8 hours) in order to report a portion of a day interval. These orders are issued and worked/completed on the same day. They can be either flow through orders (no field work-non-dispatched) or field orders (dispatched).

The interval breakout for UNE and Design is: 0-5 = 0-< 5, 5-10 = 5-<10, 10-15 = 10-< 15, 15-20 = 15- < 20, 20-25 = 20-< 25, 25-30 = 25-< 30, >= 30 = 30 and greater.

Calculation

Completion Interval = (a - b)

- a = Completion Date
- b = FOC/SOCS date time-stamp (application date)

Average Completion Interval = (c / d)

- c = Sum of all Completion Intervals
- d = Count of Orders Completed in Reporting Period

Order Completion Interval Distribution (for each interval) = (e / f) X 100

- e = Service Orders Completed in "X" days
- f = Total Service Orders Completed in Reporting Period

Report Structure

- CLEC Specific
- CLEC Aggregate
- BellSouth Aggregate
- Dispatch/Non-Dispatch categories applicable to all levels except trunks
- Residence and Business reported in day intervals = 0,1,2,3,4,5,5+
- UNE and Design reported in day intervals =0-5,5-10,10-15,15-20,20-25,25-30, >= 30
- All Levels are reported <10 line/circuits; >= 10 line/circuits (except trunks)

- Geographic Scope
  - State
  - Region

Data Retained

Relating to CLEC Experience

- Report Month
- CLEC Company Name
- Order Number (PON)
- Application Date and Time
- Completion Date (CMPLTN_DT)
- Service Type (CLASS_SVC_DESC)
- Geographic Scope

Note: Code in parentheses is the corresponding header found in the raw data file.

Relating to BellSouth Performance

- Report Month
- BellSouth Order Number
- Order Submission Date and Time
- Order Completion Date and Time
- Service Type
- Geographic Scope

SQM Disaggregation - Analog/Benchmark

SQM Level of Disaggregation	SQM Analog/Benchmark
• Resale Residence	Retail Residence
• Resale Business	Retail Business
• Resale Design	Retail Design
• Resale PBX	Retail PBX
• Resale Centrex	Retail Centrex
• Resale ISDN	Retail ISDN
• LNP (Standalone)	Retail Residence and Business (POTS)
• INP (Standalone)	Retail Residence and Business (POTS)
• 2W Analog Loop Design	Retail Residence and Business Dispatch
• 2W Analog Loop Non-Design	Retail Residence and Business – (POTS Excluding Switch-Based Orders)
• 2W Analog Loop with LNP - Design	Retail Residence and Business Dispatch
• 2W Analog Loop with LNP- Non-Design	Retail Residence and Business – (POTS Excluding Switch-Based Orders)
• 2W Analog Loop with INP-Design	Retail Residence and Business Dispatch
• 2W Analog Loop with INP-Non-Design	Retail Residence and Business – (POTS Excluding Switch-Based Orders)
• UNE Digital Loop < DS1	Retail Digital Loop < DS1
• UNE Digital Loop >= DS1	Retail Digital Loop >= DS1
• UNE Loop + Port Combinations	Retail Residence and Business
- Dispatch In	- Dispatch In
- Switch Based	- Switch Based
• UNE Switch Ports	Retail Residence and Business (POTS)
• UNE Combo Other	Retail Residence, Business and Design Dispatch
• UNE xDSL (HDSL, ADSL and UCL)	
- Without Conditioning	- <= 5 Days
- With Conditioning	- <= 12 Days
• UNE ISDN	Retail ISDN - BRI
• UNE Line Sharing Without Conditioning	ADSL Provided to Retail

With Conditioning ..... <= 12 Days
- Local Transport (Unbundled Interoffice Transport) ..... Retail DS1/DS3 Interoffice
- Local Interconnection Trunks ..... Parity with Retail
- UNE Line Splitting Without Conditioning ..... ADSL Provided to Retail
- With Conditioning ..... <= 12 Days
- UNE Other Design ..... Retail Design
- UNE Other Non-Design ..... Retail Residence and Business
- EELs ..... Retail DS1/DS3
- UNE UDC/IDSL ..... Retail ISDN - BRI

SEEM Measure

SEEM	Tier I	Tier II
Yes	X	X

SEEM Disaggregation - Analog/Benchmark

SEEM Disaggregation	SEEM Analog/Benchmark
Resale Residence	Retail Residence
Resale Business	Retail Business
Resale Design	Retail Design
Resale PBX	Retail PBX
Resale Centrex	Retail Centrex
Resale ISDN	Retail ISDN
LNP (Standalone)	Retail Residence and Business (POTS)
INP (Standalone)	Retail Residence and Business (POTS)
2W Analog Loop Design	Retail Residence and Business Dispatch
2W Analog Loop Non-Design	Retail Residence and Business – (POTS Excluding Switch-Based Orders)
2W Analog Loop with LNP - Design	Retail Residence and Business Dispatch
2W Analog Loop with LNP- Non-Design	Retail Residence and Business – (POTS Excluding Switch-Based Orders)
2W Analog Loop with INP-Design	Retail Residence and Business Dispatch
2W Analog Loop with INP-Non-Design	Retail Residence and Business – (POTS Excluding Switch-Based Orders)
UNE Digital Loop < DS1	Retail Digital Loop < DS1
UNE Digital Loop >= DS1	Retail Digital Loop >=DS1
UNE Loop + Port Combinations	Retail Residence and Business
- Dispatch In	- Dispatch In
- Switch Based	- Switch Based
UNE Switch Ports	Retail Residence and Business (POTS)
UNE Combo Other	Retail Residence, Business and Design Dispatch
UNE xDSL (HDSL, ADSL and UCL)	
- Without Conditioning	- <= 5 Days
- With Conditioning	- <= 12 Days
UNE ISDN	Retail ISDN - BRI
UNE Line Sharing Without Conditioning	ADSL Provided to Retail
With Conditioning	<= 12 Days
Local Transport (Unbundled Interoffice Transport)	Retail DS1/DS3 Interoffice
Local Interconnection Trunks	Parity with Retail
UNE Line Splitting Without Conditioning	ADSL Provided to Retail
With Conditioning	<= 12 Days
UNE Other Design	Retail Design
UNE Other Non-Design	Retail Residence and Business
EELs	Retail DS1/DS3
UNE UDC/IDSL	Retail ISDN/BRI

P-4A: Average Order Completion and Completion Notice Interval (AOCCNI) Distribution

(Deleted)

P-5: Average Completion Notice Interval

Definitions

The Completion Notice Interval is the elapsed time between the BellSouth reported completion of work and the issuance of a valid completion notice to the CLEC.

Exclusions

- Canceled Service Orders
- Order Activities of BellSouth or the CLEC associated with internal or administrative use of local services (Record Orders, Listing Orders, Test Orders, etc.) Test order types may be C, N, R, or T.
- D & F orders (Exception: "D" orders associated with LNP Standalone)

Business Rules

Measurement on interval of completion date and time entered by a field technician on dispatched orders, and 5PM start time on the due date for non-dispatched orders; to the release of a notice to the CLEC/BellSouth of the completion status. The field technician notifies the CLEC the work was complete and then he/she enters the completion time stamp information in his/her computer. This information switches through to the SOCS systems either completing the order or rejecting the order to the Work Management Center (WMC). If the completion is rejected, it is manually corrected and then completed by the WMC. The notice is returned on each individual order.

The start time for all orders is the completion stamp either by the field technician or the 5PM due date stamp; the end time for mechanized orders is the time stamp the notice was delivered to the CLEC interface (LENS, EDI, OR TAG). For non-mechanized orders-the end time will be date and timestamp of order update from the FAX record via LON or C-SOTS system. For the retail analog, the start time is when the technician completes the order and the end time is when the order status is changed to complete in SOCS.

Calculation

Completion Notice Interval = (a - b)

- a = Date and Time of Notice of Completion
- b = Date and Time of Work Completion

Average Completion Notice Interval = c / d

- c = Sum of all Completion Notice Intervals
- d = Number of Orders with Notice of Completion in Reporting Period

Report Structure

- CLEC Specific
- CLEC Aggregate
- BellSouth Aggregate
- Mechanized Orders
- Non-Mechanized Orders
- Dispatch/Non-Dispatch
- Reporting intervals in Hours; 0,1- <= 2, > 2 - <= 4, > 4 - <= 8, > 8 - <= 12, > 12- <= 24, > 24 plus Overall Average Hour Interval
- Reported in categories of <10 line / circuits; >= 10 line/circuits (except trunks)
- Geographic Scope
  - State
  - Region

Data Retained

Relating to CLEC Experience

- Report Month
- CLEC Order Number (so_nbr)
- Work Completion Date (cmpltn_dt)
- Work Completion Time
- Completion Notice Availability Date
- Completion Notice Availability Time
- Service Type
- Geographic Scope

Note: Code in parentheses is the corresponding header found in the raw data file.

Relating to BellSouth Performance

- Report Month
- BellSouth Order Number (so_nbr)
- Work Completion Date (cmpltn_dt)
- Work Completion Time
- Completion Notice Availability Date
- Completion Notice Availability Time
- Service Type
- Geographic Scope

Note: Code in parentheses is the corresponding header found in the raw data file.

SQM Disaggregation - Analog/Benchmark

SQM Level of Disaggregation	SQM Analog/Benchmark
• Resale Residence	Retail Residence
• Resale Business	Retail Business
• Resale Design	Retail Design
• Resale PBX	Retail PBX
• Resale Centrex	Retail Centrex
• Resale ISDN	Retail ISDN
• LNP (Standalone)	Retail Residence and Business (POTS)
• INP (Standalone)	Retail Residence and Business (POTS)
• 2W Analog Loop Design	Retail Residence and Business Dispatch
• 2W Analog Loop Non-Design	Retail Residence and Business – (POTS Excluding Switch-Based Orders)
• 2W Analog Loop with LNP - Design	Retail Residence and Business Dispatch
• 2W Analog Loop with LNP- Non-Design	Retail Residence and Business - POTS Excluding Switch-Based Orders
• 2W Analog Loop with INP-Design	Retail Residence and Business Dispatch
• 2W Analog Loop with INP-Non-Design	Retail Residence and Business - POTS Excluding Switch-Based Orders
• UNE Digital Loop < DS1	Retail Digital Loop < DS1
• UNE Digital Loop >= DS1	Retail Digital Loop >= DS1
• UNE Loop + Port Combinations	Retail Residence and Business
- Dispatch In	- Dispatch In
- Switch Based	- Switch Based
• UNE Switch Ports	Retail Residence and Business (POTS)
• UNE Combo Other	Retail Residence, Business and Design Dispatch
• UNE xDSL (HDSL, ADSL and UCL)	ADSL Provided to Retail

- UNE ISDN (Includes UDC) ..... Retail ISDN - BRI
- UNE Line Sharing..... ADSL Provided to Retail
- Local Transport (Unbundled Interoffice Transport) ..... Retail DS1/DS3 Interoffice
- Local Interconnection Trunks ..... Parity with Retail
- UNE Line Splitting ..... ADSL to Retail
- UNE Other Design..... Retail Design
- UNE Other Non-Design ..... Retail Residence and Business
- EELs ..... Retail DS1/DS3

SEEM Measure

SEEM	Tier I	Tier II
No		

SEEM Disaggregation - Analog/Benchmark

SEEM Disaggregation	SEEM Analog/Benchmark
• Not Applicable	Not Applicable

P-6: % Completions/Attempts without Notice or < 24 hours Notice

Definition

The purpose of this measure is to report if BellSouth is returning a FOC to the CLEC in time for the CLEC to notify their customer of the scheduled date.

Exclusions

- Canceled Orders
- Expedited Orders
- "0" dated orders or any request where the subscriber requested an earlier due date of < 24 hours prior to the original commitment date, or any LSR received < 24 hours prior to the original commitment date.

Business Rules

For CLEC Results:

Calculation would exclude any successful or unsuccessful service delivery where the CLEC was informed at least 24 hours in advance. BellSouth may also exclude from calculation any LSRs received from the requesting CLEC with less than 24 hour notice prior to the commitment date.

Calculation

Percent Completions or Attempts without Notice or with Less Than 24 Hours Notice = (a / b) X 100

- a = Completion Dispatches (Successful and Unsuccessful) With No FOC or FOC Received < 24 Hours of Original Committed Due Date
- b = All Completions

Report Structure

- CLEC Specific
- CLEC Aggregate
- Dispatch /Non-Dispatch
- Total Orders FOC < 24 Hours
- Total Completed Service Orders
- % FOC < 24 Hours
- Geographic Scope
  - State
  - Region

Data Retained

Relating to CLEC Experience

- Committed Due Date (DD)
- FOC End Timestamp
- Report Month
- CLEC Order Number and PON

Relating to BellSouth Performance

- Not Applicable

SQM Disaggregation - Analog/Benchmark

SQM Level of Disaggregation	SQM Analog/Benchmark
• Resale Residence	<= 5%
• Resale Business	
• Resale Design	
• Resale PBX	
• Resale Centrex	
• Resale ISDN	
• LNP (Standalone)	
• INP (Standalone)	
• 2W Analog Loop Design	
• 2W Analog Loop Non-Design	
• 2W Analog Loop Design with LNP	
• 2W Analog Loop Non-Design with LNP	
• 2W Analog Loop Design with INP	
• 2W Analog Loop Non-Design with INP	
• UNE Digital Loop < DS1	
• UNE Digital Loop >= DS1	
• UNE Loop + Port Combinations	
- Dispatch In	
- Switch Based	
• UNE Switch Ports	
• UNE Combo Other	
• UNE xDSL (HDSL, ADSL and UCL)	
• UNE ISDN (Includes UDC)	
• UNE Line Sharing	
• UNE Line Splitting	
• Local Transport (Unbundled Interoffice Transport)	
• Local Interconnection Trunks	
• EELS	

SEEM Measure

SEEM	Tier I	Tier II
No		

SEEM Disaggregation - Analog/Benchmark

SEEM Disaggregation	SEEM Analog/Benchmark
• Not Applicable	Not Applicable

P-6: % Completions/Attempts without Notice or < 24 hours Notice

P-7: Coordinated Customer Conversions Interval

Definition

This report measures the average time it takes BellSouth to disconnect an unbundled loop from the BellSouth switch and cross connect it to CLEC equipment. This measurement applies to service orders with INP and LNP, and where the CLEC has requested BellSouth to provide a coordinated cutover.

Exclusions

- Any order canceled by the CLEC will be excluded from this measurement.
- Delays due to CLEC following disconnection of the unbundled loop
- Unbundled Loops where there is no existing subscriber loop and loops where coordination is not requested.

Business Rules

Where the service order includes LNP, the interval includes the total time for the cutover including the translation time to place the line back in service on the ported line. When the service order includes INP, the interval includes the total time for the cutover including the translation time to place the link back in service on the ported line. The interval is calculated for the entire cutover time for the service order and then divided by items worked in that time to give the average per-item interval for each service order.

Calculation

Coordinated Customer Conversions Interval = (a - b)

- a = Completion Date and Time for Cross Connection of a Coordinated Unbundled Loop
- b = Disconnection Date and Time of an Coordinated Unbundled Loop

Percent Coordinated Customer Conversions (for each interval) = (c / d) X 100

- c = Total number of Coordinated Customer Conversions for each interval
- d = Total Number of Unbundled Loop with Coordinated Conversions (items) for the reporting period

Report Structure

- CLEC Specific
- CLEC Aggregate
- The interval breakout is 0-5 = 0-<=5, 5-15 = >5-<=15, >=15 = 15 and greater, plus Overall Average Interval
- Geographic Scope
  - State
  - Region

Data Retained

Relating to CLEC Experience

- Report Month
- CLEC Order Number
- Committed Due Date (DD)
- Service Type (CLASS_SVC_DESC)
- Cutover Start Time
- Cutover Completion time
- Portability Start and Completion Times (INP orders)
- Total Conversions (Items)

Note: Code in parentheses is the corresponding header found in the raw data file.

Relating to BellSouth Performance

- No BellSouth Analog Exists

SQM Disaggregation - Analog/Benchmark

SQM Level of Disaggregation	SQM Analog/Benchmark
• Unbundled Loops with INP	95% <= 15 minutes
• Unbundled Loops with LNP	95% <= 15 minutes

SEEM Measure

SEEM	Tier I	Tier II
Yes	X	X

SEEM Disaggregation - Analog/Benchmark

SEEM Disaggregation	SEEM Analog/Benchmark
• Unbundled Loops With INP	95% <= 15 minutes
• Unbundled Loops With LNP	95% <= 15 minutes

P-7A: Coordinated Customer Conversions – Hot Cut Timeliness % within Interval and Average Interval

Definition

This category measures whether BellSouth begins the cutover of an unbundled loop on a coordinated and/or a time specific order at the CLEC requested start time. It measures the percentage of orders where the cut begins within 15 minutes of the requested start time of the order and the average interval.

Exclusions

- Any order canceled by the CLEC will be excluded from this measurement.
- Delays caused by the CLEC
- Unbundled Loops where there is no existing subscriber loop and loops where coordination is not requested.
- All unbundled loops on multiple loop orders after the first loop
- Test Orders

Business Rules

This report measures whether BellSouth begins the cutover of an unbundled loop on a coordinated and/or a time specific order at the CLEC requested start time. The cut is considered on time if it starts 15 minutes before or after the requested start time. Using the scheduled time and the actual cutover start time, the measurement will calculate the percent within interval and the average interval. If a cut involves multiple lines, the cut will be considered "on time" if the first line is cut within the interval. <= 15 minutes includes intervals that began 15:00 minutes or less before the scheduled cut time and cuts that began 15 minutes or less after the scheduled cut time; >15 minutes, <= 30 minutes includes cuts within 15:00 – 30:00 minutes either prior to or after the scheduled cut time; >30 minutes includes cuts greater than 30:00 minutes either prior to or after the scheduled cut time. If IDLC is involved, a four hour window applies to the start time. (8 A.M. to Noon or 1 P.M. to 5 P.M.) This only applies if BellSouth notifies the CLEC by 10:30 A.M. on the day before the due date that the service is on IDLC.

Calculation

% within Interval = (a / b) X 100

- a = Total Number of Coordinated Unbundled Loop Orders for the interval
- b = Total Number of Coordinated Unbundled Loop Orders for the reporting period

Interval = (c - d)

- c = Scheduled Time for Cross Connection of a Coordinated Unbundled Loop Order
- d = Actual Start Date and Time of a Coordinated Unbundled Loop Order

Average Interval = (e / f)

- Sum of all Intervals
- Total Number of Coordinated Unbundled Loop Orders for the reporting period.

Report Structure

- CLEC Specific
- CLEC Aggregate
  Reported in intervals of early, on time and late cuts % <= 15 minutes; % >15 minutes, <= 30 minutes; % >30 minutes, plus Overall Average Interval
- Geographic Scope
  - State
  - Region
- Percentages are reported in intervals of early, on time and late cuts for IDLC and non-IDLC cuts

  On Time (Non-IDLC)
  <= 15 minutes
  Note: This is a 30-minute bucket representing a cut that begins 15 minutes or less before or after the scheduled start time.

  Early (Non-IDLC)
  >15 minutes - <= 30 minutes
  >30 minutes - <= 60 minutes
  >60 minutes - <= 120 minutes
  >120 minutes - <= 180 minutes
  >180 minutes - <= 240 minutes
  <= 240 minutes

  Late (Non-IDLC)
  >15 minutes - <= 30 minutes
  >30 minutes - <= 60 minutes
  >60 minutes - <= 120 minutes
  >120 minutes - <= 180 minutes
  >180 minutes - <= 240 minutes
  >240 minutes
  Overall Average Interval for non-IDLC

  On Time (IDLC)
  <= 2 hours
  Note: This is a 4-hour bucket representing a cut involving IDLC that begins 2 hours or less before or after the scheduled start time

  Early (IDLC)
  >2 hours

  Late (IDLC)
  >2 hours
  Overall Average Interval for IDLC

Data Retained

Relating to CLEC Experience

- Report Month
- CLEC Order Number (so_nbr)
- Committed Due Date (DD)
- Service Type (CLASS_SVC_DESC)
- Cutover Scheduled Start Time
- Cutover Actual Start Time
- Total Conversions Orders

Note: Code in parentheses is the corresponding header found in the raw data file.

Relating to BellSouth Performance

- No BellSouth Analog exists

SQM Disaggregation - Analog/Benchmark

SQM Level of Disaggregation	SQM Analog/Benchmark
• Product Reporting Level	95% within + or – 15 Minutes of Scheduled Start Time
- SL1 Time Specific	
- SL1 Non-Time Specific	
- SL2 Time Specific	
- SL2 Non-Time Specific	
- SL1 IDLC	95% within 4-Hour Window
- SL2 IDLC	

SEEM Measure

SEEM	Tier I	Tier II
Yes	X	X

SEEM Disaggregation - Analog/Benchmark

SEEM Disaggregation	SEEM Analog/Benchmark
- SL1 Time Specific	95% within + or – 15 Minutes of Scheduled Start Time
- SL1 IDLC	
- SL1 Non-Time Specific	
- SL2 Time Specific	
- SL2 Non-Time Specific	95% within 4-Hour Window
- SL2 IDLC	

P-7B: Coordinated Customer Conversions – Average Recovery Time

Definition

Measures the time between notification and resolution by BellSouth of a service outage found that can be isolated to the BellSouth side of the network. The time between notification and resolution by BellSouth must be measured to ensure that CLEC customers do not experience unjustifiable lengthy service outages during a Coordinated Customer Conversion. This report measures outages associated with Coordinated Customer Conversions prior to service order completion.

Exclusions

- Cutovers where service outages are due to CLEC caused reasons when the CLEC agrees
- Cutovers where service outages are due to end-user caused reasons when the CLEC agrees
- Test Orders

Business Rules

Measures the outage duration time related to Coordinated Customer Conversions from the initial trouble notification until the trouble has been restored and the CLEC has been notified. The duration time is defined as the time from the initial trouble notification until the trouble has been restored and the CLEC has been notified. The interval is calculated on the total outage time for the circuits divided by the total number of outages restored during the report period to give the average outage duration.

Calculation

Recovery Time = (a - b)

- a = Date and Time That Trouble is Closed by CLEC
- b = Date and Time Initial Trouble is Opened with BellSouth

Average Recovery Time = (c / d)

- c = Sum of all the Recovery Times per circuit
- d = Number of Troubles per circuit Referred to BellSouth

Report Structure

- CLEC Specific
- CLEC Aggregate
- Geographic Scope
  - State
  - Region

Data Retained

Relating to CLEC Experience

- Report Month
- CLEC Company Name
- CLEC Order Number (so_nbr)
- Committed Due Date (DD)
- Service Type (CLASS_SVC_DESC)
- CLEC Acceptance Conflict (CLEC_CONFLICT)
- CLEC Conflict Resolved (CLEC_CON_RES)
- CLEC Conflict MFC (CLEC_CONFLICT_MFC)

- Total Conversion Orders

Note: Code in parentheses is the corresponding header found in the raw data file.

Relating to BellSouth Performance

- None

SQM Disaggregation - Analog/Benchmark

SQM Level of Disaggregation	SQM Analog/Benchmark
• Unbundled Loops with INP	<= 5 Hours
• Unbundled Loops with LNP	<= 5 Hours

SEEM Measure

SEEM	Tier I	Tier II
No		

SEEM Disaggregation - Analog/Benchmark

SEEM Disaggregation	SEEM Analog/Benchmark
• Not Applicable	Not Applicable

P-7C: Hot Cut Conversions - % Provisioning Troubles Received within 7 Days of a Completed Service Order

Definition

The Percent Provisioning Troubles received within 7 days of a completed service order associated with a Hot Cut Conversion (CCC) measures the quality and accuracy of Coordinated Customer Conversion Activities.

Exclusions

- Any order cancelled by the CLEC
- Troubles caused by Customer Provided Equipment
- Test Orders

Business Rules

Measures the quality and accuracy of completed service orders associated with Coordinated and Non-coordinated Customer Conversions. The first trouble report received on a circuit ID within 7 days following a service order completion is counted in this measure. Subsequent trouble reports are measured in Repeat Report Rate. Reports are calculated searching in the prior report period for completed Coordinated Customer Conversion service orders and following 7 days after the completion of the service order for a trouble report issue date.

Calculation

% Provisioning Troubles within 7 days of service order completion = (a / b) X 100

- a = The sum of all CCC Circuits with a trouble within 7 days following service order(s) completion
- b = The total number of CCC service order circuits completed in the previous report calendar month

Report Structure

- CLEC Specific
- CLEC Aggregate
- Dispatch/Non-Dispatch
- Geographic Scope
  - State
  - Region

Data Retained

Relating to CLEC Experience

- Report Month
- CLEC Order Number (so_nbr)
- PON
- Order Submission Date (TICKET_ID)
- Order Submission Time (TICKET_ID)
- Status Type
- Status Notice Date
- Standard Order Activity
- Geographic Scope
- Total Conversion Circuits

Note: Code in parentheses is the corresponding header found in the raw data file.

Relating to BellSouth Performance

- No BellSouth Analog exists

SQM Disaggregation - Analog/Benchmark

SQM Level of Disaggregation	SQM Analog/Benchmark
• UNE Loop Design	<= 3%
• UNE Loop Non-Design	<= 3%

SEEM Measure

SEEM	Tier I	Tier II
Yes	X	X

SEEM Disaggregation - Analog/Benchmark

SEEM Disaggregation	SEEM Analog/Benchmark
• UNE Loop Design	<= 3%
• UNE Loop Non-Design	<= 3%

P-8: Cooperative Acceptance Testing - % of xDSL Loops Successfully Passing Cooperative Testing

Definition

A loop will be considered successfully cooperatively tested when both the CLEC and BellSouth representatives agree that the loop meets the technical specifications set forth in TR 73600.

Exclusions

- Testing failures due to CLEC (incorrect contact number, CLEC not ready, etc.)
- xDSL lines with no request for cooperative testing
- Test Orders

Business Rules

When a BellSouth technician finishes delivering an order for an xDSL loop where the CLEC order calls for cooperative testing at the customer's premise, the BellSouth technician is to call a toll free number to the CLEC testing center. The BellSouth technician and the CLEC representative at the center then test the line. As an example of the type of testing performed, the testing center may ask the technician to put a short on the line so that the center can run a test to see if it can identify the short. CLEC caused failures will be captured in the raw data files.

Calculation

Cooperative Acceptance Testing - % of xDSL Loops Successfully Tested = (a / b) X 100

- a = Total number of successful xDSL cooperative tests for xDSL lines where cooperative testing was requested in the reporting period
- b = Total Number of xDSL line tests requested by the CLEC and scheduled in the reporting period

Report Structure

- CLEC Specific
- CLEC Aggregate
- Type of Loop Tested
- Geographic Scope
  - State
  - Region

Data Retained

Relating to CLEC Experience

- Report Month
- CLEC Company Name (OCN)
- CLEC Order Number (so_nbr) and PON (PON)
- Committed Due Date (DD)
- Service Type (CLASS_SVC_DESC)
- Acceptance Testing Completed (ACCEPT_TESTING)
- Acceptance Testing Declined (ACCEPT_TESTING)
- Total xDSL Orders
- Missed Appointments Code (SO_MISSED_CMMT_CD)

Note: Code in parentheses is the corresponding header found in the raw data file.

Relating to BellSouth Performance

- No BellSouth Analog Exists

SQM Disaggregation - Analog/Benchmark

SQM Level of Disaggregation	SQM Analog/Benchmark
• UNE xDSL	95% of Lines Successfully Tested
- ADSL	
- HDSL	
- UCL	
- OTHER	

SEEM Measure

SEEM	Tier I	Tier II
Yes	X	X

SEEM Disaggregation - Analog/Benchmark

SEEM Disaggregation	SEEM Analog/Benchmark
• UNE xDSL	95% of Lines Successfully Tested
- ADSL	
- HDSL	
- UCL	
- Other	

P-9: % Provisioning Troubles within 30 Days of Service Order Completion

Definition

Percent Provisioning Troubles within 30 days of Service Order Completion measures the quality and accuracy of Service order activities.

Exclusions

- Cancelled Service Orders
- Order Activities of BellSouth or the CLEC associated with internal or administrative use of local services (Record Orders, Listing Orders, Test Orders, etc.) Test order types may be C, N, R, or T.
- D & F orders
- Trouble reports caused and closed out to Customer Provided Equipment (CPE)

Business Rules

Measures the quality and accuracy of completed orders. The first trouble report received after service order completion is counted in this measure. Subsequent trouble reports are measured in Repeat Report Rate. Reports are calculated searching in the prior report period for completed service orders and following 30 days after completion of the service order for a trouble report issue date.

D & F orders are excluded as there is no subsequent activity following a disconnect.

Note: Standalone LNP historical data is not available in the maintenance systems (LMOS or WFA).

Calculation

% Provisioning Troubles within 30 days of Service Order Activity = (a / b) X 100

- a = Trouble reports on all completed orders within 30 days following service order(s) completion
- b = All Service Orders completed in the previous report calendar month

Report Structure

- CLEC Specific
- CLEC Aggregate
- BellSouth Aggregate
- Reported in categories of <10 line/circuits; >= 10 line/circuits (except trunks)
- Dispatch /Non-Dispatch (except trunks)
- Geographic Scope
  - State
  - Region

Data Retained

Relating to CLEC Experience

- Report Month
- CLEC Order Number and PON
- Order Submission Date (TICKET_ID)
- Order Submission Time (TICKET_ID)
- Status Type
- Status Notice Date

- Standard Order Activity
- Geographic Scope

Note: Code in parentheses is the corresponding header found in the raw data file.

Relating to BellSouth Performance

- Report Month
- BellSouth Order Number
- Order Submission Date
- Order Submission Time
- Status Type
- Status Notice Date
- Standard Order Activity
- Geographic Scope

SQM Disaggregation - Analog/Benchmark

SQM Level of Disaggregation	SQM Analog/Benchmark
Resale Residence	Retail Residence
Resale Business	Retail Business
Resale Design	Retail Design
Resale PBX	Retail PBX
Resale Centrex	Retail Centrex
Resale ISDN	Retail ISDN
LNP (Standalone)	Retail Residence and Business (POTS)
INP (Standalone)	Retail Residence and Business (POTS)
2W Analog Loop Design	Retail Residence and Business Dispatch
2W Analog Loop Non-Design	Retail Residence and Business - (POTS Excluding Switch-Based Orders)
2W Analog Loop with LNP Design	Retail Residence and Business Dispatch
2W Analog Loop with LNP Non-Design	Retail Residence and Business - (POTS Excluding Switch-Based Orders)
2W Analog Loop with INP Design	Retail Residence and Business Dispatch
2W Analog Loop with INP Non-Design	Retail Residence and Business (POTS - Excluding Switch-Based Orders)
UNE Digital Loop < DS1	Retail Digital Loop < DS1
UNE Digital Loop >= DS1	Retail Digital Loop >= DS1
UNE xDSL (HDSL, ADSL and UCL)	ADSL provided to Retail
UNE ISDN (Includes UDC)	Retail ISDN BRI
UNE Line Sharing	ADSL Provided to Retail
UNE Loop + Port Combinations	Retail Residence and Business
- Dispatch In	- Dispatch In
- Switch-Based	- Switch Based
UNE Switch Ports	Retail Residence and Business (POTS)
UNE Combo Other	Retail Residence, Business and Design Dispatch (Including Dispatch Out and Dispatch In)
Local Transport (Unbundled Interoffice Transport)	Retail DS1/DS3 Interoffice
UNE Other Non-Design	Retail Residence and Business
UNE Other Design	Retail Design
Local Interconnection Trunks	Parity with Retail
UNE Line Splitting	ADSL to Retail
EELs	Retail DS1/DS3

SEEM Measure

SEEM	Tier I	Tier II
Yes	X	X

SEEM Disaggregation - Analog/Benchmark

SEEM Disaggregation	SEEM Analog/Benchmark
• Resale Residence	Retail Residence
• Resale Business	Retail Business
• Resale Design	Retail Design
• Resale PBX	Retail PBX
• Resale Centrex	Retail Centrex
• Resale ISDN	Retail ISDN
• LNP (Standalone)	Retail Residence and Business (POTS)
• INP (Standalone)	Retail Residence and Business (POTS)
• 2W Analog Loop Design	Retail Residence and Business Dispatch
• 2W Analog Loop Non-Design	Retail Residence and Business - (POTS Excluding Switch-Based Orders)
• 2W Analog Loop with LNP Design	Retail Residence and Business Dispatch
• 2W Analog Loop with LNP Non-Design	Retail Residence and Business - (POTS Excluding Switch-Based Orders)
• 2W Analog Loop with INP Design	Retail Residence and Business Dispatch
• 2W Analog Loop with INP Non-Design	Retail Residence and Business (POTS - Excluding Switch-Based Orders)
• UNE Digital Loop < DS1	Retail Digital Loop < DS1
• UNE Digital Loop >= DS1	Retail Digital Loop >= DS1
• UNE Loop + Port Combinations	Retail Residence and Business
- Dispatch In	- Dispatch In
- Switch-Based	- Switch-Based
• UNE Switch Ports	Retail Residence and Business (POTS)
• UNE Combo Other	Retail Residence, Business and Design Dispatch (Including Dispatch Out and Dispatch In)
• UNE xDSL (HDSL, ADSL and UCL)	ADSL provided to Retail
• UNE ISDN (Includes UDC)	Retail ISDN BRI
• UNE Line Sharing	ADSL Provided to Retail
• Local Transport (Unbundled Interoffice Transport)	Retail DS1/DS3 Interoffice
• Local Interconnection Trunks	Parity with Retail
• UNE Line Splitting	ADSL Provided to Retail
• UNE Other Non-Design	Retail Residence and Business
• UNE Other Design	Retail Design
• EELs	Retail DS1/DS3

P-10: Total Service Order Cycle Time (TSOCT)
(Deleted)

P-11: Service Order Accuracy

Definition

The "service order accuracy" measurement measures the accuracy and completeness of BellSouth service orders by comparing what was ordered and what was completed.

Exclusions

- Canceled Service Orders
- Order Activities of BellSouth or the CLEC associated with internal or administrative use of local services (Record Orders, Listing Orders, Test Orders, etc.)
- D & F orders

Business Rules

A statistically valid sample of service orders, completed during a monthly reporting period, is compared to the original account profile and the order that the CLEC sent to BellSouth. An order is "completed without error" if all service attributes and account detail changes (as determined by comparing the original order) completely and accurately reflect the activity specified on the original order and any supplemental CLEC order. For both small and large sample sizes, when a Service Request cannot be matched with a corresponding Service Order, it will not be counted. For small sample sizes an effort will be made to replace the service request.

Service Order Accuracy Sampling Process: A list of all orders completed in the report month is generated. The orders are then listed by the disaggregations specified in the SQM. For each disaggregation, the quantity of completed orders and the error rate for each disaggregation from the previous month are entered into a "Stratified Random Sampling for Proportions" formula. This formula determines the number of orders that are to be reviewed for each disaggregation. Once the sample size for each disaggregation is determined, the specified quantity of orders for each disaggregation are pulled for review.

Calculation

Percent Service Order Accuracy = (a / b) X 100

- a = Orders Completed without Error
- b = Orders Completed in Reporting Period

Report Structure

- CLEC Aggregate
- Reported in categories of <10 line/circuits; >= 10 line/circuits
- Dispatch/Non-Dispatch

Data Retained

Relating to CLEC Experience

- Report Month
- CLEC Order Number and PON
- Local Service Request (LSR)
- Order Submission Date
- Committed Due Date
- Service Type
- Standard Order Activity

Relating to BellSouth Performance

- No BellSouth Analog Exist

SQM Disaggregation - Analog/Benchmark

SQM Level of Disaggregation	SQM Analog/Benchmark
• Resale Residence	95% Accurate
• Resale Business	
• Resale Design (Specials)	
• UNE Specials (Design)	
• UNE (Non-Design)	
• Local Interconnection Trunks	

SEEM Measure

SEEM	Tier I	Tier II
Yes		X

SEEM Disaggregation - Analog/Benchmark

SEEM Disaggregation	SEEM Analog/Benchmark
• Resale	95%
• UNE	95%
• UNE-P	95%

Note: This measure to be replaced when P-11A is implemented.

***Note*: This measure becomes effective with September 2003 service orders. The Service Order Accuracy measure as defined in the previous SQM will be effective prior to that time.**

P-11A: Service Order Accuracy

Definition

The Service Order Accuracy measurement measures the accuracy and completeness of CLEC requests for service by comparing the CLEC Local Service Request (LSR) to the completed service order after provisioning has been completed. Only electronically submitted LSRs that require manual handling by a BellSouth service representative in the LCSC are measured.

Exclusions

- Canceled Service Orders
- Order Activities of BellSouth or the CLEC associated with internal or administrative use of local services (Record Orders, Listing Orders, orders using test OCNs, which may be coded C, N, R or T etc.)
- Disconnect Orders
- CLEC LSRs submitted manually (FAX or Courier)
- CLEC LSRs submitted electronically that are not manually handled by BellSouth (Flow Through)

Business Rules

Only CLEC LSRs submitted electronically that fall out of the electronic system for manual processing (partially mechanized) by a BellSouth representative and the resulting service orders are selected for this measure. The CLEC requested services on the LSR are compared to the completed service order using the CLEC-Affecting Service Attributes shown below.

Selected CLEC-Affecting Service Attributes

The BellSouth Local Service Request (LSR) fields identified below will be used, as applicable, for this Service Order Accuracy review process.

BellSouth LSR Fields

The fields listed below would only be captured as a miss when they are service affecting. For the purpose of the Service Order Accuracy measure, if any of the fields listed below are populated on the LSR and do not match the corresponding field on the Service Order, but this mismatch does not affect the correct provisioning of the Service Order, the field is not considered to be service affecting and therefore will not be included as a miss in this measure. An example would be LCSC/System workarounds, which will be identified in a document posted on the Interconnection website. CLECs may discuss any of the posted LCSC/System Workarounds during the regular PMAP notification calls.

- Company Code
- PON
- Billed Telephone Number
- Telephone Number
- Ported Telephone Number
- Circuit ID
- PIC
- LPIC
- Directory Listing
  - Directory Delivery Address
  - Listing Activity
  - Alphanumeric Listing Identifier Code
  - Record Type

  - Listing Type
  - Listed Telephone Number
  - Listed Name, Last Name
  - Listed Name, First Name
  - Address Indicator
  - Listed Address House Number
  - Listed Address House Number Suffix
  - Listed Address Street Directional
  - Listed Address Street Name
  - Listed Address Thoroughfare
  - Listed Address Street Suffix
  - Listed Address Locality
  - Yellow Pages Heading
- Features
  - Feature Activity
  - Feature Codes
  - Feature Detail*
- Hunting
  - Hunt Group Activity
  - Hunt Group Identifier
  - Telephone Number Identifier
  - Hunt Type Code
  - Hunt Line Activity
  - Hunting Sequence
  - Number Type
  - Hunting Telephone Number
- E911 Listing
  - Service Address House Number
  - Service Address House Number Suffix
  - Service Address Street Directional
  - Service Address Street Name
  - Service Address Thoroughfare
  - Service Address Street Suffix
  - Service Address Descriptive Location
- EATN
- ATN
- APOT
- CFA
- NC
- NCI

* Feature Detail will only be checked for the following USOCs: GCE, GCJ, CREX4, GCJRC, GCZ, DRS, VMSAX, S98VM, S98AF, SMBBX, MBBRX. USOCs and FIDs for Feature Detail will be posted on the Interconnection Website. Any changes to the USOCs and FIDs required to continue checking the identical service will be updated on this Website.

Calculation

Percent Service Order Accuracy = (a / b) X 100

- a = Applicable Orders Completed without Error
- b = Applicable Orders Completed in Reporting Period

Report Structure

- CLEC Specific
- CLEC Aggregate
- Geographic Scope
  - Region

Data Retained

Relating to CLEC Experience

- Report Month
- CLEC Order Number (PON)
- Local Service Request (LSR) Number
- BellSouth Service Order Number
- BellSouth Service Order Completion Date
- Service Type (Resale, UNE, UNE-P)
- Standard Order Activity

Relating to BellSouth Performance

- No BellSouth Analog Exists

SQM Disaggregation – Analog/Benchmark

SQM Level of Disaggregation	SQM Analog/Benchmark
Resale	95% Accurate
UNE	95% Accurate
UNE-P	95% Accurate

SEEM Measure

SEEM	Tier I	Tier II	Tier III
Yes	X	X	

SEEM Disaggregation - Analog/Benchmark

SEEM Disaggregation	SEEM Analog/Benchmark
Resale	95% Accurate
UNE	95% Accurate
UNE-P	95% Accurate

P-12: LNP-Average Disconnect Timeliness Interval & Disconnect Timeliness Interval Distribution

(Deleted)

P-13B: LNP - Percent Out of Service < 60 Minutes

Definition

The Number of LNP related conversions where the time required to facilitate the activation of the port in BellSouth's network is less than 60 minutes, expressed as a percentage of total number of activations that took place.

Exclusions

- CLEC-caused errors
- NPAC caused errors unless caused by BellSouth
- Standalone LNP orders with more than 500 number activations

Business Rules

The Start time is the Receipt of the NPAC broadcast activation message in BellSouth's LSMS. The End time is when the Provisioning event is successfully completed in BellSouth's network as reflected in BellSouth's LSMS. Count the number of activations that took place in less than 60 minutes.

Calculation

Percent Out of Service < 60 Minutes = (a / b) X 100

- a = Number of activations provisioned in less than 60 minutes
- b = Total LNP activations

Report Structure

- CLEC Specific
- CLEC Aggregate
- Geographic Scope
  - State
  - Region

Data Retained

Relating to CLEC Experience

- Order Number
- Telephone Number/Circuit Number
- Committed Due Date
- Date/Time of Recent Change Notice

Relating to BellSouth Performance

- SOCS Completion Date and Time Stamp
- CLEC Activate Message

SQM Disaggregation – Analog/Benchmark

SQM Level of Disaggregation	SQM Analog/Benchmark
• LNP	> = 96.5%

SEEM Measure

SEEM	Tier I	Tier II	Tier III
Yes	X	X	

SEEM Disaggregation - Analog/Benchmark

SEEM Disaggregation	SEEM Analog/Benchmark
• LNP	> = 96.5%

P-13C: LNP – Percentage of Time BellSouth Applies the 10-Digit Trigger Prior to the LNP Order Due Date

Definition

Percentage of time BellSouth applies 10-digit trigger for LNP TNs prior to the due date.

Exclusions

Excludes CLEC or Customer caused misses or delays.

Business Rules

Obtain number of LNP TNs where the 10-digit trigger was applicable prior to due date, and the total number of LNP TNs where the 10-digit trigger was applicable.

Calculation

Percentage of 10-Digit Applications = (a / b) X 100

- a = Count of LNP TNs for which 10-digit trigger was applied prior to due date
- b = Total LNP TNs for which 10-digit triggers were applicable

Report Structure

- CLEC Specific
- CLEC Aggregate
- Geographic Scope
  - State
  - Region

Data Retained

Relating to CLEC Experience

- Order Number
- Telephone Number/Circuit Number
- Committed Due Date
- Date/Time of Recent Change Notice

Relating to BellSouth Performance

- SOCS Completion Date and Time Stamp
- CLEC Activate Message

SQM Disaggregation - Analog/Benchmark

SQM Level of Disaggregation	SQM Analog/Benchmark
• LNP (Standalone)	Benchmark: 95%

SEEM Measure

SEEM	Tier I	Tier II
Yes	X	X

SEEM Disaggregation	SEEM Analog/Benchmark
• LNP (Standalone)	Benchmark: 95%

P-13D: LNP - Average Disconnect Timeliness Interval (Non-Trigger)

Definition

Disconnect Timeliness is defined as the interval between the time ESI Number Manager receives the valid 'Number Ported' message from NPAC (signifying the CLEC 'Activate') until the time the Disconnect is completed in the Central Office switch. This interval effectively measures BellSouth responsiveness by isolating it from impacts that are caused by CLEC related activities.

Exclusions

- Canceled Service Orders
- Order Activities of BellSouth or the CLEC associated with internal or administrative use of local services (Record Orders, Listing Orders, Test Orders, etc.) where identifiable. Order types may be C, N, R, or T.
- CLEC-caused errors
- NPAC-caused errors, unless caused by BellSouth
- Incomplete Ports where only a subset of activate messages have been received compared with the LSR and create messages.
- Orders which are candidates for 10 digit triggers, except those that did not receive 10 digit triggers prior to the port out date.
- LSRs where the CLEC did not contact BST within 30 minutes after Activate Message.

Business Rules

The Disconnect Timeliness interval is determined for each telephone number ported associated with a disconnect service order processed on an LSR during the reporting period. The Disconnect Timeliness interval is the elapsed time from when BellSouth receives a valid 'Number Ported' message in ESI Number Manager (signifying the CLEC 'Activate') for each telephone number ported until each number on the service order is disconnected in the Central Office switch. Elapsed time for each ported number is accumulated for each reporting dimension. The accumulated time for each reporting dimension is then divided by the total number of selected telephone numbers disconnected in the reporting period. Non-Business hours will be excluded from the duration calculation for unscheduled after hours LNP ports. This will yield a benchmark equivalent to by 12:00 noon the next business day thus, keeping the benchmark at 4 hours.

Calculation

Disconnect Timeliness Interval = (a - b)

- a = Completion Date and Time in Central Office switch for each number on disconnect order
- b = Valid 'Number Ported' message received date and time

Average Disconnect Timeliness Interval = (c / d)

- c = Sum of all Disconnect Timeliness Intervals
- d = Total Number of disconnected numbers completed in reporting period

Report Structure

- CLEC Specific
- CLEC Aggregate
- Geographic Scope
  - State
  - Region

Data Retained

Relating to CLEC Experience

- Order Number
- Telephone Number/Circuit Number
- Committed Due Date
- Receipt Date/Time (ESI Number Manager)
- Date/Time of Recent Change Notice

Relating to BellSouth Performance

- SOCS Completion Date and Time Stamp
- CLEC Activate Message

SQM Disaggregation – Analog/Benchmark

SQM Level of Disaggregation	SQM Analog/Benchmark
LNP (Normal Working Hours and Approved After Hours)	95% < = 4 Hours
LNP (Unscheduled After Hours Ports)	95% <= 4 Hours (excluding non-business hours)

SEEM Measure

SEEM	Tier I	Tier II
Yes	X	X

SEEM Disaggregation - Analog/Benchmark

- LNP (Normal Working Hours and Approved After Hours).....95% < = 4 Hours
- LNP (Unscheduled After Hours Ports).....95% <= 4 Hours (excluding non-business hours)

Section 4: Maintenance & Repair

M&R-1: Missed Repair Appointments

Definition

The percent of customer trouble reports not cleared by the committed date and time.

Exclusions

- Trouble tickets canceled at the CLEC request
- BellSouth trouble reports associated with internal or administrative service
- Customer Provided Equipment (CPE) troubles or CLEC Equipment Trouble

Business Rules

The negotiated commitment date and time is established when the repair report is received. The cleared time is the date and time that BellSouth personnel clear the trouble and closes the trouble report in his/her Computer Access Terminal (CAT) or workstation. If this is after the Commitment time, the report is flagged as a "Missed Commitment" or a missed repair appointment. When the data for this measure is collected for BellSouth and a CLEC, it can be used to compare the percentage of the time repair appointments are missed due to BellSouth reasons. (No access reports are not part of this measure because they are not a missed appointment.)

> **Note**: Appointment intervals vary with force availability in the POTS environment. Specials and Trunk intervals are standard interval appointments of no greater than 24 hours. Standalone LNP historical data is not available in the maintenance systems (LMOS or WFA).

Calculation

Percentage of Missed Repair Appointments = (a / b) X 100

- a = Count of Customer Troubles Not Cleared by the Quoted Commitment Date and Time
- b = Total Customer Trouble reports closed in Reporting Period

Report Structure

- Dispatch/Non-Dispatch
- CLEC Specific
- CLEC Aggregate
- BellSouth Aggregate
- Geographic Scope
  - State
  - Region

Data Retained

Relating to CLEC Experience

- Report Month
- CLEC Company Name
- Submission Date and Time (TICKET_ID)
- Completion Date (CMPLTN_DT)
- Service Type (CLASS_SVC_DESC)
- Disposition and Cause (CAUSE_CD & CAUSE_DESC)

Note: Code in parentheses is the corresponding header found in the raw data file.

Relating to BellSouth Performance

- Report Month
- BellSouth Company Code
- Submission Date and Time
- Completion Date
- Service Type
- Disposition and Cause (Non-Design /Non-Special Only)
- Trouble Code (Design and Trunking Services)

SQM Disaggregation - Analog/Benchmark

SQM Level of Disaggregation	SQM Analog/Benchmark
Resale Residence	Retail Residence
Resale Business	Retail Business
Resale Design	Retail Design
Resale PBX	Retail PBX
Resale Centrex	Retail Centrex
Resale ISDN	Retail ISDN
2W Analog Loop Design	Retail Residence & Business Dispatch
2W Analog Loop Non – Design	Retail Residence & Business (POTS) (Exclusion of Switch-based feature troubles)
UNE Digital Loop < DS1	Retail Digital Loop < DS1
UNE Digital Loop >= DS1	Retail Digital Loop >= DS1
UNE Loop + Port Combinations	Retail Residence and Business
UNE Switch ports	Retail Residence and Business (POTS)
UNE Combo Other	Retail Residence, Business and Design Dispatch
UNE xDSL (HDSL, ADSL and UCL)	ADSL Provided to Retail
UNE ISDN	Retail ISDN – BRI
UNE Line Sharing	ADSL provided to Retail
UNE Other Design	Retail Design
UNE Other Non-Design	Retail Residence and Business
Local Interconnection Trunks	Parity with Retail
Local Transport (Unbundled Interoffice Transport)	Retail DS1/DS3 Interoffice

SEEM Measure

SEEM	Tier I	Tier II
Yes	X	X

SEEM Disaggregation - Analog/Benchmark

SEEM Disaggregation	SEEM Analog/Benchmark
• Resale Residence	Retail Residence
• Resale Business	Retail Business
• Resale Design	Retail Design
• Resale PBX	Retail PBX
• Resale Centrex	Retail Centrex
• Resale ISDN	Retail ISDN
• 2W Analog Loop Design	Retail Residence and Business Dispatch
• 2W Analog Loop Non – Design	Retail Residence and Business (POTS) (Exclusion of Switch-based feature troubles)
• UNE Digital Loop < DS1	Retail Digital Loop < DS1
• UNE Digital Loop >= DS1	Retail Digital Loop >= DS1
• UNE Loop + Port Combinations	Retail Residence & Business
• UNE Switch ports	Retail Residence & Business (POTS)
• UNE Combo Other	Retail Residence, Business and Design Dispatch
• UNE xDSL (HDSL, ADSL and UCL)	ADSL provided to Retail
• UNE ISDN	Retail ISDN – BRI
• UNE Line Sharing	ADSL Provided to Retail
• UNE Other Design	Retail Design
• UNE Other Non-Design	Retail Residence and Business
• Local Transport (Unbundled Interoffice Transport)	Retail DS1/DS3 Interoffice
• Local Interconnection Trunks	Parity with Retail

M&R-2: Customer Trouble Report Rate

Definition

Initial and repeated customer direct or referred customer troubles reported within a calendar month per 100 lines/circuits in service.

Exclusions

- Trouble tickets canceled at the CLEC request.
- BellSouth trouble reports associated with internal or administrative service.
- Customer Provided Equipment (CPE) troubles or CLEC Equipment Trouble.

Business Rules

Customer Trouble Report Rate is computed by accumulating the number of maintenance initial and repeated trouble reports during the reporting period. The resulting number of trouble reports are divided by the total "number of service" lines, ports or combination that exist for the CLECs and BellSouth respectively at the end of the report month.

Calculation

Customer Trouble Report Rate = (a / b) X 100

- a = Count of Initial and Repeated Customer Trouble Reports closed in the Current Period
- b = Number of Service Access Lines in service at End of the Report Period

Report Structure

- CLEC Specific
- CLEC Aggregate
- BellSouth Aggregate
- Dispatch/Non-Dispatch
- Geographic Scope
  - State
  - Region

Data Retained

Relating to CLEC Experience

- Report Month
- CLEC Company Name
- Ticket Submission Date and Time (TICKET_ID)
- Ticket Completion Date (CMPLTN_DT)
- Service Type (CLASS_SVC_DESC)
- Disposition and Cause (CAUSE_CD & CAUSE_DESC)
- # Service Access Lines in Service at the end of period

Note: Code in parentheses is the corresponding header found in the raw data file.

Relating to BellSouth Performance

- Report Month
- BellSouth Company Code
- Ticket Submission Date and Time
- Ticket Completion Date
- Service Type
- Disposition and Cause (Non-Design /Non-Special Only)
- Trouble Code (Design and Trunking Services)
- # Service Access Lines in Service at the end of period

SQM Disaggregation - Analog/Benchmark

SQM Level of Disaggregation	SQM Analog/Benchmark
Resale Residence	Retail Residence
Resale Business	Retail Business
Resale Design	Retail Design
Resale PBX	Retail PBX
Resale Centrex	Retail Centrex
Resale ISDN	Retail ISDN
2W Analog Loop Design	Retail Residence and Business Dispatch
2W Analog Loop Non – Design	Retail Residence and Business (POTS) (Exclusion of Switch-based feature troubles)
UNE Digital Loop < DS1	Retail Digital Loop < DS1
UNE Digital Loop >= DS1	Retail Digital Loop >= DS1
UNE Loop + Port Combinations	Retail Residence and Business
UNE Switch Ports	Retail Residence and Business (POTS)
UNE Combo Other	Retail Residence, Business and Design Dispatch
UNE xDSL (HDSL, ADSL and UCL)	ADSL Provided to Retail
UNE ISDN	Retail ISDN – BRI
UNE Line Sharing	ADSL Provided to Retail
UNE Other Design	Retail Design
UNE Other Non-Design	Retail Residence and Business
Local Interconnection Trunks	Parity with Retail
Local Transport (Unbundled Interoffice Transport)	Retail DS1/DS3 Interoffice

SEEM Measure

SEEM	Tier I	Tier II
Yes	X	X

SEEM Disaggregation - Analog/Benchmark

SEEM Disaggregation	SEEM Analog/Benchmark
Resale Residence	Retail Residence
Resale Business	Retail Business
Resale Design	Retail Design
Resale PBX	Retail PBX
Resale Centrex	Retail Centrex
Resale ISDN	Retail ISDN
2W Analog Loop Design	Retail Residence and Business Dispatch
2W Analog Loop Non – Design	Retail Residence and Business (POTS) (Exclusion of Switch-based feature troubles)
UNE Digital Loop < DS1	Retail Digital Loop < DS1
UNE Digital Loop > DS1	Retail Digital Loop >= DS1
UNE Loop + Port Combinations	Retail Residence and Business
UNE Switch Ports	Retail Residence and Business (POTS)
UNE Combo Other	Retail Residence, Business and Design Dispatch

- UNE xDSL (HDSL, ADSL and UCL) ..... ADSL Provided to Retail
- UNE ISDN ..... Retail ISDN – BRI
- UNE Line Sharing..... ADSL Provided to Retail
- UNE Other Design..... Retail Design
- UNE Other Non-Design ..... Retail Residence and Business
- Local Transport (Unbundled Interoffice Transport) ..... Retail DS1/DS3 Interoffice
- Local Interconnection Trunks ..... Parity with Retail

M&R-3: Maintenance Average Duration

Definition

The Average duration of Customer Trouble Reports from the receipt of the Customer Trouble Report to the time the trouble report is cleared.

Exclusions

- Trouble tickets canceled at the CLEC request.
- BellSouth trouble reports associated with internal or administrative service.
- Customer Provided Equipment (CPE) troubles or CLEC Equipment Trouble.

Business Rules

For Average Duration the clock starts on the date and time of the receipt of the correct report information, i.e. correct telephone number, correct circuit identification, trouble description, etc. for the repair request. The clock stops on the date and time the service is restored and the BellSouth or CLEC customer is notified (when the technician completes the trouble ticket on his/her CAT or work systems).

Calculation

Maintenance Duration = (a - b)

- a = Date and Time of Service Restoration
- b = Date and Time Customer Trouble Ticket was Opened

Average Maintenance Duration = (c / d)

- c = Total of all maintenance durations in the reporting period
- d = Total Closed Customer Troubles in the reporting period

Report Structure

- Dispatch/Non-Dispatch
- CLEC Specific
- CLEC Aggregate
- BellSouth Aggregate
- Geographic Scope
  - State
  - Region

Data Retained

Relating to CLEC Experience

- Report Month
- Total Tickets (LINE_NBR)
- CLEC Company Name
- Ticket Submission Date and Time (TICKET_ID)
- Ticket Completion Date (CMPLTN_DT)
- Service Type (CLASS_SVC_DESC)
- Disposition and Cause (CAUSE_CD & CAUSE_DESC)

Note: Code in parentheses is the corresponding header found in the raw data file.

Relating to BellSouth Performance

- Report Month
- Total Tickets
- BellSouth Company Code
- Ticket Submission Date
- Ticket Submission Time
- Ticket Completion Date
- Ticket Completion Time
- Total Duration Time
- Service Type
- Disposition and Cause (Non-Design/Non-Special Only)
- Trouble Code (Design and Trunking Services)

SQM Disaggregation - Analog/Benchmark

SQM Level of Disaggregation	SQM Analog/Benchmark
Resale Residence	Retail Residence
Resale Business	Retail Business
Resale Design	Retail Design
Resale PBX	Retail PBX
Resale Centrex	Retail Centrex
Resale ISDN	Retail ISDN
2W Analog Loop Design	Retail Residence and Business Dispatch
2W Analog Loop Non – Design	Retail Residence and Business (POTS) (Exclusion of Switch-based feature troubles)
UNE Digital Loop < DS1	Retail Digital Loop < DS1
UNE Digital Loop >= DS1	Retail Digital Loop >= DS1
UNE Loop + Port Combinations	Retail Residence and Business
UNE Switch ports	Retail Residence and Business (POTS)
UNE Combo Other	Retail Residence, Business & Design Dispatch
UNE xDSL (HDSL, ADSL and UCL)	ADSL Provided to Retail
UNE ISDN	Retail ISDN – BRI
UNE Line Sharing	ADSL Provided to Retail
UNE Other Design	Retail Design
UNE Other Non-Design	Retail Residence and Business
Local Transport (Unbundled Interoffice Transport)	Retail DS1/DS3 Interoffice
Local Interconnection Trunks	Parity with Retail

SEEM Measure

SEEM	Tier I	Tier II
Yes	X	X

SEEM Disaggregation - Analog/Benchmark

SEEM Disaggregation	SEEM Analog/Benchmark
Resale Residence	Retail Residence
Resale Business	Retail Business
Resale Design	Retail Design
Resale PBX	Retail PBX
Resale Centrex	Retail Centrex
Resale ISDN	Retail ISDN
2W Analog Loop Design	Retail Residence and Business Dispatch
2W Analog Loop Non – Design	Retail Residence and Business (POTS) (Exclusion of Switch-based feature troubles)
UNE Digital Loop < DS1	Retail Digital Loop < DS1

- UNE Digital Loop >= DS1 ..... Retail Digital Loop >= DS1
- UNE Loop + Port Combinations ..... Retail Residence and Business
- UNE Switch ports ..... Retail Residence and Business (POTS)
- UNE Combo Other ..... Retail Residence, Business and Design Dispatch
- UNE xDSL (HDSL, ADSL and UCL) ..... ADSL Provided to Retail
- UNE ISDN ..... Retail ISDN – BRI
- UNE Line Sharing ..... ADSL Provided to Retail
- UNE Other Design ..... Retail Design
- UNE Other Non-Design ..... Retail Residence and Business
- Local Transport (Unbundled Interoffice Transport) ..... Retail DS1/DS3 Interoffice
- Local Interconnection Trunks ..... Parity with Retail

M&R-4: Percent Repeat Troubles within 30 Days

Definition

Percent Customer Repeat Troubles within 30 Days measures the percent of customer troubles, during the current reporting period, that had at least one prior trouble ticket on the same line/circuit, anytime in the proceeding 30 calendar days from the receipt of the current trouble report.

Exclusions

- Trouble tickets canceled at the CLEC request.
- BellSouth trouble reports associated with internal or administrative service.
- Customer Provided Equipment (CPE) troubles or CLEC Equipment Trouble.

Business Rules

This measure includes Customer trouble reports on the same line/circuit, received within 30 days of an original Customer trouble report, using the 'cleared date' of the first trouble and the 'received date' of the next trouble.

Calculation

Percent Repeat Customer Troubles within 30 Days = (a / b) X 100

- a = Count of Customer Troubles using the 'received date' where more than one trouble report was logged for the same service line/circuit, within a continuous 30 days
- b = Count of Total Customer Trouble Reports using the 'cleared date', in the Reporting Period

Report Structure

- Dispatch/Non-Dispatch
- CLEC Specific
- CLEC Aggregate
- BellSouth Aggregate
- Geographic Scope
  - State
  - Region

Data Retained

Relating to CLEC Experience

- Report Month
- Total Tickets (LINE_NBR)
- CLEC Company Name
- Ticket Submission Date and Time (TICKET_ID)
- Ticket Completion Date (CMPLTN_DT)
- Total and Percent Repeat Customer Trouble Reports within 30 Days (TOT_REPEAT)
- Service Type
- Disposition and Cause (CAUSE_CD & CAUSE_DESC)

Note: Code in parentheses is the corresponding header found in the raw data file.

Relating to BellSouth Performance

- Report Month

- Total Tickets
- BellSouth Company Code
- Ticket Submission Date
- Ticket Submission Time
- Ticket Completion Date
- Ticket Completion Time
- Total and Percent Repeat Customer Trouble Reports within 30 Days
- Service Type
- Disposition and Cause (Non-Design /Non-Special Only)
- Trouble Code (Design and Trunking Services)

SQM Disaggregation - Analog/Benchmark

SQM Level of Disaggregation	SQM Analog/Benchmark
Resale Residence	Retail Residence
Resale Business	Retail Business
Resale Design	Retail Design
Resale PBX	Retail PBX
Resale Centrex	Retail Centrex
Resale ISDN	Retail ISDN
2W Analog Loop Design	Retail Residence and Business Dispatch
2W Analog Loop Non – Design	Retail Residence and Business (POTS) (Exclusion of Switch-based feature troubles)
UNE Digital Loop < DS1	Retail Digital Loop < DS1
UNE Digital Loop >= DS1	Retail Digital Loop >= DS1
UNE Loop + Port Combinations	Retail Residence and Business
UNE Switch ports	Retail Residence and Business (POTS)
UNE Combo Other	Retail Residence, Business and Design Dispatch
UNE xDSL (HDSL, ADSL and UCL)	ADSL Provided to Retail
UNE ISDN	Retail ISDN – BRI
UNE Line Sharing	ADSL Provided to Retail
UNE Other Design	Retail Design
UNE Other Non-Design	Retail Residence and Business
Local Transport (Unbundled Interoffice Transport)	Retail DS1/DS3 Interoffice
Local Interconnection Trunks	Parity with Retail

SEEM Measure

SEEM	Tier I	Tier II
Yes	X	X

SEEM Disaggregation - Analog/Benchmark

SEEM Disaggregation	SEEM Analog/Benchmark
Resale Residence	Retail Residence
Resale Business	Retail Business
Resale Design	Retail Design
Resale PBX	Retail PBX
Resale Centrex	Retail Centrex
Resale ISDN	Retail ISDN
2W Analog Loop Design	Retail Residence and Business Dispatch
2W Analog Loop Non – Design	Retail Residence and Business (POTS) (Exclusion of Switch-based feature troubles)
UNE Digital Loop < DS1	Retail Digital Loop < DS1
UNE Digital Loop >= DS1	Retail Digital Loop >= DS1
UNE Loop + Port Combinations	Retail Residence and Business
UNE Switch ports	Retail Residence and Business (POTS)
UNE Combo Other	Retail Residence, Business and Design Dispatch

- UNE xDSL (HDSL, ADSL and UCL) ..... ADSL Provided to Retail
- UNE ISDN ..... Retail ISDN – BRI
- UNE Line Sharing..... ADSL Provided to Retail
- UNE Other Design..... Retail Design
- UNE Other Non-Design ..... Retail Residence and Business
- Local Transport (Unbundled Interoffice Transport) ..... Retail DS1/DS3 Interoffice
- Local Interconnection Trunks ..... Parity with Retail

M&R-5: Out of Service (OOS) > 24 Hours

Definition

For Out of Service Customer Troubles (no dial tone, cannot be called or cannot call out) the percentage of Total OOS Customer Troubles cleared in excess of 24 hours. (All design services are considered to be out of service).

Exclusions

- Trouble Reports canceled at the CLEC request
- BellSouth Trouble Reports associated with administrative service
- Customer Provided Equipment (CPE) Troubles or CLEC Equipment Troubles.

Business Rules

Customer Trouble reports that are out of service and cleared in excess of 24 hours. The clock begins when the customer trouble report is created in LMOS/WFA and the customer trouble is counted if the elapsed time exceeds 24 hours.

Calculation

Out of Service (OOS) > 24 hours = (a / b) X 100

- a = Total Cleared Customer Troubles OOS > 24 Hours
- b = Total OOS Customer Troubles in Reporting Period

Report Structure

- Dispatch/Non-Dispatch
- CLEC Specific
- BellSouth Aggregate
- CLEC Aggregate
- Geographic Scope
  - State
  - Region

Data Retained

Relating to CLEC Experience

- Report Month
- Total Tickets
- CLEC Company Name
- Ticket Submission Date and Time (TICKET_ID)
- Ticket Completion Date (CMPLTN_DT
- Percentage of Customer Troubles out of Service > 24 Hours (OOS>24_FLAG)
- Service type (CLASS_SVC_DESC)
- Disposition and Cause (CAUSE_CD & CAUSE-DESC)

Note: Code in parentheses is the corresponding header found in the raw data file.

Relating to BellSouth Performance

- Report Month
- Total Tickets
- BellSouth Company Code
- Ticket Submission Date
- Ticket Submission time
- Ticket Completion Date
- Ticket Completion Time
- Percent of Customer Troubles out of Service > 24 Hours
- Service Type
- Disposition and Cause (Non-Design/Non-Special only)
- Trouble Code (Design and Trunking Services)

SQM Disaggregation - Analog/Benchmark

SQM Level of Disaggregation	SQM Analog/Benchmark
Resale Residence	Retail Residence
Resale Business	Retail Business
Resale Design	Retail Design
Resale PBX	Retail PBX
Resale Centrex	Retail Centrex
Resale ISDN	Retail ISDN
2W Analog Loop Design	Retail Residence and Business Dispatch
2W Analog Loop Non – Design	Retail Residence and Business (POTS) (Exclusion of Switch-based feature troubles)
UNE Digital Loop < DS1	Retail Digital Loop < DS1
UNE Digital Loop >= DS1	Retail Digital Loop >= DS1
UNE Loop + Port Combinations	Retail Residence and Business
UNE Switch ports	Retail Residence and Business (POTS)
UNE Combo Other	Retail Residence, Business and Design Dispatch
UNE xDSL (HDSL, ADSL and UCL)	ADSL provided to Retail
UNE ISDN	Retail ISDN – BRI
UNE Line Sharing	ADSL Provided to Retail
UNE Other Design	Retail Design
UNE Other Non-Design	Retail Residence and Business
Local Transport (Unbundled Interoffice Transport)	Retail DS1/DS3 Interoffice
Local Interconnection Trunks	Parity with Retail

SEEM Measure

SEEM	Tier I	Tier II
Yes	X	X

SEEM Disaggregation - Analog/Benchmark

SEEM Disaggregation	SEEM Analog/Benchmark
Resale Residence	Retail Residence
Resale Business	Retail Business
Resale Design	Retail Design
Resale PBX	Retail PBX
Resale Centrex	Retail Centrex
Resale ISDN	Retail ISDN
2W Analog Loop Design	Retail Residence and Business Dispatch
2W Analog Loop Non – Design	Retail Residence and Business (POTS) (Exclusion of Switch-based feature troubles)
UNE Digital Loop < DS1	Retail Digital Loop < DS1

- UNE Digital Loop >= DS1 ..... Retail Digital Loop >= DS1
- UNE Loop + Port Combinations ..... Retail Residence and Business
- UNE Switch Ports ..... Retail Residence and Business (POTS)
- UNE Combo Other ..... Retail Residence, Business and Design Dispatch
- UNE xDSL (HDSL, ADSL and UCL) ..... ADSL Provided to Retail
- UNE ISDN ..... Retail ISDN – BRI
- UNE Line Sharing ..... ADSL Provided to Retail
- UNE Other Design ..... Retail Design
- UNE Other Non-Design ..... Retail Residence and Business
- Local Transport (Unbundled Interoffice Transport) ..... Retail DS1/DS3 Interoffice
- Local Interconnection Trunks ..... Parity with Retail

M&R-6: Average Answer Time – Repair Centers

Definition

This report measures the average time a customer is in queue when calling a BellSouth Repair Center.

Exclusions

- Abandoned Calls

Business Rules

The clock starts when a CLEC Representative or BellSouth customer makes a choice on the Repair Center's menu and is put in queue for the next repair attendant. The clock stops when the repair attendant answers the call.

Note: The Total Column is a combined BellSouth Residence and Business number.

Calculation

Answer Time for BellSouth Repair Centers = (a - b)

- a = Time BellSouth Repair Attendant Answers Call
- b = Time of entry into queue after ACD Selection

Average Answer Time for BellSouth Repair Centers = (c / d)

- c = Sum of all Answer Times
- d = Total number of calls by reporting period

Report Structure

- CLEC Aggregate
- BellSouth Aggregate
- Geographic Scope
  - Region

Data Retained

Relating to CLEC Experience

- CLEC Average Answer Time

Relating to BellSouth Performance

- BellSouth Average Answer Time

SQM Disaggregation - Analog/Benchmark

SQM Level of Disaggregation

- Region. CLEC/BellSouth Service Centers and BellSouth Repair Centers are regional.

SQM Analog/Benchmark

- For CLEC, Average Answer Times in UNE Center and BRMC are comparable to the Average Answer Times in the BellSouth Repair Centers.

SEEM Measure

SEEM	Tier I	Tier II
No		

SEEM Disaggregation - Analog/Benchmark

SEEM Disaggregation	SEEM Analog/Benchmark
• Not Applicable	Not Applicable

M&R-7: Mean Time To Notify CLEC of Network Outages

Definition

BellSouth will inform the CLEC and appropriate BellSouth personnel of any Network outages (customer impacting).

Exclusions

None

Business Rules

The time it takes for the Network Management Center (NMC) to notify the CLEC and appropriate BellSouth personnel of a customer impacting network incident in equipment that may be utilized by the CLEC. When BellSouth becomes aware of a network incident, the CLEC and appropriate BellSouth personnel will be notified electronically. The notification time for each outage will be measured in minutes and divided by the number of outages for the reporting period. The CLECs will be notified the same way and at the same time as BellSouth personnel. These are broadcast messages. It is up to those receiving the message to determine if they have customers affected by the incident.

Calculation

Time to Notify = (a - b)

- a = Date and Time NMC Notified
- b = Date and Time NMC detected network incident

Mean Time to Notify = (c / d)

- c = Sum of all Times to Notify
- d = Count of all Network Incidents

Report Structure

- BellSouth Aggregate
- CLEC Aggregate
- CLEC Specific
- Geographic Scope
  - Region

Data Retained

Relating to CLEC Experience

- Report Month
- Major Network Events
- Date/Time of Incident
- Date/Time of Notification

Relating to BellSouth Performance

- Report Month
- Major Network Events
- Date/Time of Incident
- Date/Time of Notification

SQM Disaggregation - Analog/Benchmark

SQM Level of Disaggregation	SQM Analog/Benchmark
• BellSouth Aggregate	Parity with Retail
• CLEC Aggregate	Parity with Retail
• CLEC Specific	Parity with Retail

SEEM Measure

SEEM	Tier I	Tier II
No		

SEEM Disaggregation - Analog/Benchmark

SEEM Disaggregation	SEEM Analog/Benchmark
• Not Applicable	Not Applicable

Section 5: Billing

B-1: Invoice Accuracy

Definition

This measure provides the percentage of accuracy of the billing invoices rendered to CLECs during the current month.

Exclusions

- Adjustments not related to billing errors (e.g., credits for service outage, special promotion credits, adjustments to satisfy the customer)
- Test Accounts

Business Rules

The accuracy of billing invoices delivered by BellSouth to the CLEC must enable them to provide a degree of billing accuracy comparative to BellSouth bills rendered to retail customers of BellSouth. CLECs request adjustments on bills determined to be incorrect. The BellSouth Billing verification process includes manually analyzing a sample of local bills from each bill period. The bill verification process draws from a mix of different customer billing options and types of service. An end-to-end auditing process is performed for new products and services. Internal measurements and controls are maintained on all billing processes. The CLEC-specific raw data file (which is available on the PMAP web site) will contain the number of bills and adjustments for the reporting month. The number of bills and bill adjustments will be displayed by OCN and/or ACNA.

Calculation

Invoice Accuracy = [(a - b) / a] X 100

- a = Absolute Value of Total Billed Revenues during current month
- b = Absolute Value of Total Billing Related Adjustments during current month

Measure of Adjustments = [(c-d) / c] X 100

- c = Number of Bills in current month
- d = Number of Billing-related Adjustments in current month

Report Structure

- CLEC Specific
- CLEC Aggregate
- BellSouth Aggregate
- Geographic Scope
  - State
  - Region
- Number of Adjustments

Data Retained

Relating to CLEC Experience

- Report Month
- Invoice Type
  - UNE
  - Resale
  - Interconnection

- Total Billed Revenue
- Total Billing Related Adjustments
- Number of Bills
- Number of Adjustments

Relating to BellSouth Performance

- Report Month
- Retail Type
  - CRIS
  - CABS
- Total Billed Revenue
- Total Billing Related Adjustments

SQM Disaggregation - Analog/Benchmark

SQM Level of Disaggregation	SQM Analog/Benchmark
• Product/Invoice Type - Resale - UNE - Interconnection	Parity with BellSouth Retail Aggregate

SEEM Measure

SEEM	Tier I	Tier II
Yes	X	X

SEEM Disaggregation - Analog/Benchmark

SEEM Disaggregation	SEEM Analog/Benchmark
• Resale	Parity with Retail
• UNE	
• Interconnection	

B-2: Mean Time to Deliver Invoices

Definition

This report measures the mean interval for timeliness of billing invoices sent to CLECs in an agreed upon format. CRIS-based invoices are measured in business days, and CABS-based invoices in calendar days.

Exclusions

None

Business Rules

Bill Distribution is calculated as follows: CRIS BILLS-The number of workdays is reported for CRIS bills. This is calculated by counting the Bill Period date as the first workday. Weekends and holidays are excluded when counting workdays. J/N Bills are counted in the CRIS work day category for the purposes of the measurement since their billing account number (Q account) is provided from the CRIS system.

CABS BILLS-The number of calendar days is reported for CABS bills. This is calculated by counting the day following the Bill Period date as the first calendar day. Weekends and holidays are included when counting the calendar days.

Calculation

Invoice Timeliness = (a - b)

- a = Invoice Transmission Date
- b = Close Date of Scheduled Bill Cycle

Mean Time To Deliver Invoices = (c / d)

- c = Sum of all Invoice Timeliness intervals
- d = Count of Invoices Transmitted in Reporting Period

Report Structure

- CLEC Specific
- CLEC Aggregate
- BellSouth Aggregate
- Geographic Scope
  - State
  - Region

Data Retained

Relating to CLEC Experience

- Report Month
- Invoice Type
  - UNE
  - Resale
  - Interconnection
  - State
- Invoice Transmission Count
- Date of Scheduled Bill Close

Relating to BellSouth Performance

- Report Month
- Invoice Type
  - CRIS
  - CABS
- Invoice Transmission Count
- Date of Scheduled Bill Close

SQM Disaggregation - Analog/Benchmark

SQM Level of Disaggregation

Product/Invoice Type

- Resale
- UNE
- Interconnection
- State

SQM Analog/Benchmark

- CLEC Average Delivery Intervals for both CRIS and CABS Invoices are comparable to BellSouth Average delivery for both systems.

SEEM Measure

SEEM	Tier I	Tier II
Yes	X	X

SEEM Disaggregation - Analog/Benchmark

SEEM Disaggregation	SEEM Analog/Benchmark
CLEC State - CRIS - CABS	Parity with Retail
BST-State	

B-3: Usage Data Delivery Accuracy

Definition

This measurement captures the percentage of recorded usage that is delivered error free and in an acceptable format to the appropriate Competitive Local Exchange Carrier (CLEC). These percentages will provide the necessary data for use as a comparative measurement for BellSouth performance. This measurement captures Data Delivery Accuracy rather than the accuracy of the individual usage recording.

Exclusions

None

Business Rules

The accuracy of the data delivery of usage records delivered by BellSouth to the CLEC must enable them to provide a degree of accuracy comparative to BellSouth bills rendered to their retail customers. If errors are detected in the delivery process, they are investigated, evaluated and documented. Errors are corrected and the data retransmitted to the CLEC.

Calculation

Usage Data Delivery Accuracy (Packs) = (a - b) / a X 100 **(This calculation not ordered by the FPSC)**

- a = Total number of usage data packs sent during current month
- b = Total number of usage data packs requiring retransmission during current month

Usage Data Delivery Accuracy (Records) = (c - d) / c X 100

- c = Total number of usage records sent during current month
- d = Total number of usage records requiring retransmission during current month

Report Structure

- CLEC Aggregate
- BellSouth Aggregate
- Geographic Scope
  - Region

Data Retained

Relating to CLEC Experience

- Report Month
- Record Type
  - BellSouth Recorded
  - Non-BellSouth Recorded
- Number of Records
- Packs

Relating to BellSouth Performance

- Report Month
- Record Type
- Number of Records
- Packs

SQM Disaggregation - Analog/Benchmark

SQM Level of Disaggregation	SQM Analog/Benchmark
• Region	Parity With Retail

SEEM Measure

SEEM	Tier I	Tier II
Yes	X	X

SEEM Disaggregation - Analog/Benchmark

SEEM Disaggregation	SEEM Analog/Benchmark
• CLEC State (In Florida, SEEM is based on records)	Parity with Retail
• BellSouth Region	

B-4: Usage Data Delivery Completeness

Definition

This measurement provides percentage of complete and accurately recorded usage data (usage recorded by BellSouth and usage recorded by other companies and sent to BellSouth for billing) that is processed and transmitted to the CLEC within thirty (30) days of the message recording date. A parity measure is also provided showing completeness of BellSouth messages processed and transmitted via CMDS. BellSouth delivers its own retail usage from recording location to billing location via CMDS as well as delivering billing data to other companies. Timeliness, Completeness and Mean Time to Deliver Usage measures are reported on the same report.

Exclusions

None

Business Rules

The purpose of these measurements is to demonstrate the level of quality of usage data delivered to the appropriate CLEC. Method of delivery is at the option of the CLEC.

Calculation

Usage Data Delivery Completeness = (a / b) X 100

- a = Total number of Recorded usage records delivered during current month that are within thirty (30) days of the message recording date
- b = Total number of Recorded usage records delivered during the current month

Report Structure

- CLEC Specific
- CLEC Aggregate
- Region

Data Retained

Relating to CLEC Experience

- Report Month
- Record Type
  - BellSouth Recorded
  - Non-BellSouth Recorded

Relating to BellSouth Performance

- None

SQM Disaggregation - Analog/Benchmark

SQM Level of Disaggregation	SQM Analog/Benchmark
Region	>= 98% within 30 Calendar Days

SEEM Measure

SEEM	Tier I	Tier II
No		

SEEM Disaggregation - Analog/Benchmark

SEEM Disaggregation	SEEM Analog/Benchmark
• Not Applicable	Not Applicable

B-5: Usage Data Delivery Timeliness

Definition

This measurement provides a percentage of recorded usage data (usage recorded by BellSouth and usage recorded by other companies and sent to BellSouth for billing) that is delivered to the appropriate CLEC within six (6) calendar days from the receipt of the initial recording. A parity measure is also provided showing timeliness of BellSouth messages processed and transmitted via CMDS. Timeliness, Completeness and Mean Time to Deliver Usage measures are reported on the same report.

Exclusions

None

Business Rules

The purpose of this measurement is to demonstrate the level of timeliness for processing and transmission of usage data delivered to the appropriate CLEC. The usage data will be mechanically transmitted or mailed to the CLEC data processing center once daily. The Timeliness interval of usage recorded by other companies is measured from the date BellSouth receives the records to the date BellSouth distributes to the CLEC. Method of delivery is at the option of the CLEC

Calculation

Usage Data Delivery Timeliness Current month = (a / b) X 100

- a = Total number of usage records sent within six (6) calendar days from initial recording/receipt
- b = Total number of usage records sent

Report Structure

- CLEC Aggregate
- CLEC Specific
- Region

Data Retained

Relating to CLEC Experience

- Report Month
- Record Type
  - BellSouth Recorded
  - Non-BellSouth Recorded

Relating to BellSouth Performance

- None

SQM Level of Disaggregation - Analog/Benchmark

SQM Level of Disaggregation	SQM Analog/Benchmark
• Region	>= 95% Delivered within 6 Calendar Days

SEEM Measure

SEEM	Tier I	Tier II
No		

SEEM Disaggregation - Analog/Benchmark

SEEM Disaggregation	SEEM Analog/Benchmark
• Not Applicable	Not Applicable

B-6: Mean Time to Deliver Usage

Definition

This measurement provides the average time it takes to deliver Usage Records to a CLEC. A parity measure is also provided showing timeliness of BellSouth messages processed and transmitted via CMDS. Timeliness, Completeness and Mean Time to Deliver Usage measures are reported on the same report.

Exclusions

None

Business Rules

The purpose of this measure is to calculate the average number of days it takes BellSouth to deliver usage data to the appropriate CLEC. The calculation reflects the differences between the date the data is transmitted or mailed to the CLEC and the date the data is generated by Customer divided by the total record volume delivery.

Each delivery record is calculated as the time, in days, between when the customer generates the call and when BellSouth delivers the usage data to the CLEC. Each delivery record is categorized by the resulting number of days.

An estimated interval is calculated for each category by taking the total number of usage data records delivered for that period and multiplying it by the total number of days in that period. The mean (average) time to deliver the usage data is calculated by summing all estimated intervals and dividing by the total number of records delivered.

> **Note:** Any usage record falling in the 30+ day interval will be added using an average figure of 31.5 days.

Usage data is mechanically transmitted or mailed to the CLEC data processing center once daily. Method of delivery is at the option of the CLEC.

Calculation

Delivery Interval Record = (a - b)

- a = Date BellSouth delivers the usage data
- b = Date usage data is generated by the customer

Estimated Interval = (c X d)

- c = Number of records delivered in each category
- d = Number of days to deliver for the category

Mean Time to Deliver Usage = (e / f)

- e = Sum of all estimated intervals
- f = Total number of records delivered

Report Structure

- CLEC Aggregate
- CLEC Specific
- Region

Data Retained

Relating to CLEC Experience

- Report Month
- Record Type
  - BellSouth Recorded
  - Non-BellSouth Recorded

Relating to BellSouth Performance

- None

SQM Level of Disaggregation - Analog/Benchmark

SQM Level of Disaggregation	SQM Analog/Benchmark
• Region	<= 6 Days

SEEM Measure

SEEM	Tier I	Tier II
No		

SEEM Disaggregation - Analog/Benchmark

SEEM Disaggregation	SEEM Analog/Benchmark
• Not Applicable	Not Applicable

B-7: Recurring Charge Completeness

Definition

This measure captures percentage of fractional recurring charges appearing on the correct bill.

Exclusions

None

Business Rules

The effective date of the recurring charge must be within 30 days of the bill date for the charge to appear on the correct bill. The count of fractional recurring charges in the calculation refers to a sum of absolute total dollar values either billed on the correct bill or absolute value of total fractional recurring charges on the bill.

Calculation

Recurring Charge Completeness = (a / b) X 100

- a = Count of fractional recurring charges that are on the correct bill[1]
- b = Total count of fractional recurring charges that are on the bill

[1]Correct bill = next available bill

Report Structure

- CLEC Specific
- CLEC Aggregate
- BellSouth Aggregate

Data Retained

Relating to CLEC Experience

- Report Month
- Invoice Type
- Total Recurring Charges Billed
- Total Billed On Time

Relating to BellSouth Performance

- Report Month
- Retail Analog
- Total Recurring Charges Billed
- Total Billed On Time

SQM Level of Disaggregation - Analog/Benchmark

SQM Level of Disaggregation	SQM Analog/Benchmark
Product/Invoice Type	
• Resale	Parity
• UNE	Benchmark 90%
• Interconnection	Benchmark 90%

SEEM Measure

SEEM	Tier I	Tier II
No		

SEEM Disaggregation - Analog/Benchmark

SEEM Disaggregation	SEEM Analog/Benchmark
• Not Applicable	Not Applicable

B-8: Non-Recurring Charge Completeness

Definition

This measure captures percentage of non-recurring charges appearing on the correct bill.

Exclusions

None

Business Rules

The effective date of the non-recurring charge must be within 30 days of the bill date for the charge to appear on the correct bill. The count of non-recurring charges in the calculation refers to a sum of absolute total dollar values either billed on the correct bill or absolute value of total non-recurring charges on the bill.

Calculation

Non-Recurring Charge Completeness = (a / b) X 100

- a = Count of non-recurring charges that are on the correct bill[1]
- b = Total count of non-recurring charges that are on the bill

[1]Correct bill = next available bill

Report Structure

- CLEC Specific
- CLEC Aggregate
- BellSouth Aggregate
- Geographic Scope
  - State

Data Retained

Relating to CLEC Experience

- Report Month
- Invoice Type
- Total Non-Recurring Charges Billed
- Total Billed On Time

Relating to BellSouth Performance

- Report Month
- Retail Analog
- Total Non-Recurring Charges Billed
- Total Billed On Time

SQM Level of Disaggregation - Analog/Benchmark

SQM Level of Disaggregation	SQM Analog/Benchmark
Product/Invoice Type	
• Resale	Parity
• UNE	Benchmark 90%
• Interconnection	Benchmark 90%

SEEM Measure

SEEM	Tier I	Tier II
No		

SEEM Disaggregation - Analog/Benchmark

SEEM Disaggregation	SEEM Analog/Benchmark
• Not Applicable	Not Applicable

B-9: Percent Daily Usage Feed Errors Corrected in "X" Business Days

Definition

Measures the timely correction of Daily Usage Feed (DUF) errors in record information and Pack formats measured separately. Errors included (1) Pack Failure errors and (2) EMI content errors in records.

Exclusions

- Usage that cannot be corrected and resent or usage that the CLEC doesn't want Retransmitted.
- CLEC Problem/Issue/File Retransmission forms disputed by BellSouth SMEs that do not result in an EMI error.
- CLEC notification received by BellSouth > 10 business days from transmission date of errored messages or packs.

Business Rules

This measure will provide the % of errors corrected in "X" Business days.

Pack Failure errors are defined as a DUF header/trailer error containing one or more of the following conditions: Grand total records not equal to records in pack or sequence/invoice numbers for a from RAO is not sequential

EMI content errors are defined as those records with errors contained in the EMI detail records that cause a message to be unbillable by the CLEC

Only notification received via the CLEC Problem/Issue/File Retransmission form will be included in this measure. To locate the form, go to the PMAP web site (http://pmap.bellsouth.com/) and click the Documentation/Exhibits link, then select the "CLEC Problem/Issue/File Retransmission form."

When circumstances arise for multiple content errors it is not necessary for the form to be filled out in its entirety, the CLECs agree to provide sufficient information for content error research so that a thorough investigation and resolution can be completed.

For each type error condition, a new CLEC Problem/Issue/File Retransmission form should be submitted.

EMI content errors should be attached in a separate file from the CLEC Problem/Issue/File Retransmission form

Elapsed time is measured in business days.

The clock starts when BellSouth receives CLEC's Problem/Issue/File Retransmission form.

The clock stops when BellSouth provides the corrected usage to the CLEC using the predesignated DUF delivery method.

This measure applies only to CLECs that are ODUF and ADUF participants

Calculation

Timeliness of Daily Usage EMI Content Errors Corrected = (a / b) X 100

- a = Total number of Daily Usage Records with EMI Content Errors Corrected in the reporting month within 10 Business Days.
- b = Total number of Daily Usage Records with EMI Content Errors corrected in reporting month.

Timeliness of Daily Usage Pack Format Errors Corrected = (c / d) X 100

- c = Total number of Daily Usage Packs with Format Errors Corrected in the reporting month within 4 Business Days.
- d = Total number of Daily Usage Packs with Format Errors corrected in reporting month

Report Structure

- CLEC Specific
  - Total number of BST disputed Daily Usage Records with EMI Content Errors received in reporting month.
  - Total number of Daily Usage Records with EMI Content Errors received in reporting month.
  - Total number of BST disputed Daily Usage Packs with Format Errors received in reporting month
  - Total number of Daily Usage Packs with Format Errors received in reporting month
- CLEC Aggregate
- Geographic Scope
  - Region

Data Retained

Relating to CLEC Experience

- Report Month
  - BellSouth Recorded
  - Non-BellSouth Recorded

Relating to BellSouth Performance

- None

SQM Level of Disaggregation - Analog/Benchmark

SQM Level of Disaggregation	SQM Analog/Benchmark
• Region	Diagnostic

SEEM Measure

SEEM	Tier I	Tier II
No		

SEEM Disaggregation - Analog/Benchmark

SEEM Disaggregation	SEEM Analog/Benchmark
• Not Applicable	Not Applicable

B-10: Percent Billing Errors Corrected in "X" Business Days

Definition

Measures timely carrier bill adjustments.

Exclusions

Adjustments that are initiated by BellSouth

Business Rules

This measure applies to CLEC wholesale bill adjustment requests. IXC Access billing adjustment requests are not reflected in this measure. Elapsed time is measured in business days. The clock starts when BellSouth receives the CLEC Billing Adjustment Request (BAR) form and the clock stops when BellSouth either makes an adjustment through BOCRIS or ACATS (generally next CLEC bill unless adjustment request after middle of the month) or BellSouth denies the request in BDATS or ACATS and BellSouth notifies the CLEC of the BAR resolution. BellSouth will report separately those adjustment requests that are disputed by BellSouth. (BAR form and instructions are found at www.interconnection.bellsouth.com/forms/html/billing&collections.html).

Calculation

Percent Billing Errors Corrected in 45 Business Days = (a / b) X 100

- a = Number of BAR resolutions sent in 45 Business Days
- b = Total Number of BAR resolutions due in Reporting Period

Report Structure

- CLEC Specific
- CLEC Aggregate
- Geographic Scope
  - State
  - Region

Data Retained

Relating to CLEC Experience

- Number of BellSouth Adjustments in 45 Business Days
- Total number of Billing Adjustment Requests in Reporting Period
- Number of Adjustments disputed by BellSouth (reported separately)

Relating to BellSouth Performance

- None

SQM Disaggregation - Retail Analog/Benchmark

SQM Level of Disaggregation	SQM Analog/Benchmark
• State	90% Billing Disputes <= 45 Business Days

SEEM Measure

SEEM	Tier I	Tier II
Yes	X	X

SEEM Disaggregation - Analog/Benchmark

SEEM Disaggregation	SEEM Analog/Benchmark
• State	90% Billing Disputes <= 45 Business Days

Note: In order to set an appropriate penalty provision, staff recommends deferring implementation of the penalty until conclusion of the commission proceeding on the remedy structure of the SEEM Plan, or 120 days, whichever comes first.

Section 6: Operator Services and Directory Assistance

OS-1: Speed to Answer Performance/Average Speed to Answer – Toll

Definition

Measurement of the average time in seconds calls wait before answered by a toll operator.

Exclusions

None

Business Rules

The clock starts when the customer enters the queue and the clock stops when a BellSouth representative answers the call or the customer abandons the call. The length of each call is determined by measuring, using a scanning technique, and accumulating the elapsed time from the entry of a customer call into the BellSouth call management system queue until the customer call is abandoned or transferred to BellSouth personnel assigned to handle calls for assistance. The system makes no distinction between CLEC customers and BellSouth customers.

Calculation

Speed to Answer Performance/Average Speed to Answer – Toll = a / b

- a = Total queue time
- b = Total calls answered

Note: Total queue time includes time that answered calls wait in queue as well as time abandoned calls wait in queue prior to abandonment.

Report Structure

- Reported for the aggregate of BellSouth and CLECs
  - State

Data Retained (on Aggregate Basis)

- For the items below, BellSouth's Performance Measurement Analysis Platform (PMAP) receives a final computation; therefore, no raw data file is available in PMAP
- Month
- Call Type (Toll)
- Average Speed of Answer

SQM Disaggregation - Analog/Benchmark

SQM Level of Disaggregation	SQM Analog/Benchmark
None	Parity by Design

SEEM Measure

SEEM	Tier I	Tier II
No		

SEEM Disaggregation - Analog/Benchmark

SEEM Disaggregation	SEEM Analog/Benchmark
• Not Applicable	Not Applicable

OS-2: Speed to Answer Performance/Percent Answered within "X" Seconds – Toll

Definition

Measurement of the percent of toll calls that are answered in less than ten seconds

Exclusions

None

Business Rules

The clock starts when the customer enters the queue and the clock stops when a BellSouth representative answers the call or the customer abandons the call. The length of each call is determined by measuring, using a scanning technique, and accumulating the elapsed time from the entry of a customer call into the BellSouth call management system queue until the customer call is abandoned or transferred to BellSouth personnel assigned to handle calls for assistance. The system makes no distinction between CLEC customers and BellSouth customers.

Calculation

The Percent Answered within "X" Seconds measurement for toll is derived by using the BellCore Statistical Answer Conversion Tables, to convert the Average Speed to Answer measure into a percent of calls answered within "X" seconds. The BellCore Conversion Tables are specific to the defined parameters of work time, number of operators, max queue size and call abandonment rates.

Report Structure

- Reported for the aggregate of BellSouth and CLECs
  - State

Data Retained (on Aggregate Basis)

- For the items below, BellSouth's Performance Measurement Analysis Platform (PMAP) receives a final computation; therefore, no raw data file is available in PMAP
- Month
- Call Type (Toll)
- Average Speed of Answer

SQM Disaggregation - Analog/Benchmark

SQM Level of Disaggregation:	SQM Analog/Benchmark
None	Parity by Design

SEEM Measure

SEEM	Tier I	Tier II
No		

SEEM Disaggregation - Analog/Benchmark

SEEM Disaggregation	SEEM Analog/Benchmark
• Not Applicable	Not Applicable

DA-1: Speed to Answer Performance/Average Speed to Answer – Directory Assistance (DA)

Definition

Measurement of the average time in seconds calls wait before answered by a DA operator.

Exclusions

None

Business Rules

The clock starts when the customer enters the queue and the clock stops when a BellSouth representative answers the call or the customer abandons the call. The length of each call is determined by measuring, using a scanning technique, and accumulating the elapsed time from the entry of a customer call into the BellSouth call management system queue until the customer call is abandoned or transferred to BellSouth personnel assigned to handle calls for assistance. The system makes no distinction between CLEC customers and BellSouth customers.

Calculation

Speed to Answer Performance/Average Speed to Answer – Directory Assistance (DA) = a / b

- a = Total queue time
- b = Total calls answered

Note: Total queue time includes time that answered calls wait in queue as well as time abandoned calls wait in queue prior to abandonment.

Report Structure

- Reported for the aggregate of BellSouth and CLECs
  - State

Data Retained (on Aggregate Basis)

- For the items below, BellSouth's Performance Measurement Analysis Platform (PMAP) receives a final computation; therefore, no raw data file is available in PMAP
- Month
- Call Type (DA)
- Average Speed of Answer

SQM Level of Disaggregation - Analog/Benchmark

SQM Level of Disaggregation	SQM Analog/Benchmark
None	Parity by Design

SEEM Measure

SEEM	Tier I	Tier II
No		

SEEM Disaggregation - Analog/Benchmark

SEEM Disaggregation	SEEM Analog/Benchmark
• Not Applicable	Not Applicable

DA-2: Speed to Answer Performance/Percent Answered within "X" Seconds – Directory Assistance (DA)

Definition

Measurement of the percent of DA calls that are answered in less than twelve seconds.

Exclusions

None

Business Rules

The clock starts when the customer enters the queue and the clock stops when a BellSouth representative answers the call or the customer abandons the call. The length of each call is determined by measuring, using a scanning technique, and accumulating the elapsed time from the entry of a customer call into the BellSouth call management system queue until the customer call is abandoned or transferred to BellSouth personnel assigned to handle calls for assistance. The system makes no distinction between CLEC customers and BellSouth customers.

Calculation

The Percent Answered within "X" Seconds measurement for DA is derived by using the BellCore Statistical Answer Conversion Tables, to convert the Average Speed to Answer measure into a percent of calls answered within "X" seconds. The BellCore Conversion Tables are specific to the defined parameters of work time, number of operators, max queue size and call abandonment rates.

Report Structure

- Reported for the aggregate of BellSouth and CLECs
  - State

Data Retained (on Aggregate Basis)

- For the items below, BellSouth's Performance Measurement Analysis Platform (PMAP) receives a final computation; therefore, no raw data file is available in PMAP.
- Month
- Call Type (DA)
- Average Speed of Answer

SQM Disaggregation - Analog/Benchmark

SQM Level of Disaggregation	SQM Analog/Benchmark
None	Parity by Design

SEEM Measure

SEEM	Tier I	Tier II
No		

SEEM Disaggregation - Analog/Benchmark

SEEM Disaggregation	SEEM Analog/Benchmark
• Not Applicable	Not Applicable

Section 7: Database Update Information

D-1: Average Database Update Interval

Definition

This report measures the interval from receipt of the database change request to the completion of the update to the database for Line Information Database (LIDB), Directory Assistance and Directory Listings.

Exclusions

- Updates Canceled by the CLEC
- Initial update when supplemented by CLEC
- BellSouth updates associated with internal or administrative use of local services.

Business Rules

The interval for this measure begins with the date and time stamp when a service order is completed and the completion notice is released to all systems to be updated with the order information including Directory Assistance, Directory Listings, and Line Information Database (LIDB). The end time stamp is the date and time of completion of updates to the system. This metric includes updates from stand-alone directory listing orders.

For BellSouth Results:

The BellSouth computation is identical to that for the CLEC with the clarifications noted below.

Other Clarifications and Qualification:

- For LIDB, the elapsed time for a BellSouth update is measured from the point in time when the BellSouth file maintenance process makes the LIDB update information available until the date and time reported by BellSouth that database updates are completed.
- Results for the CLECs are captured and reported at the update level by Reporting Dimension (see below).
- The Completion Date is the date upon which BellSouth issues the Update Completion Notice to the CLEC.
- If the CLEC initiates a supplement to the originally submitted update and the supplement reflects changes in customer requirements (rather than responding to BellSouth initiated changes), then the update submission date and time will be the date and time of BellSouth receipt of a syntactically correct update supplement. Update activities responding to BellSouth initiated changes will not result in changes to the update submission date and time used for the purposes of computing the update completion interval.
- Elapsed time is measured in hours and hundredths of hours rounded to the nearest tenth of an hour.
- Because this should be a highly automated process, the accumulation of elapsed time continues through off-schedule, weekends and holidays; however, scheduled maintenance windows are excluded.

Calculation

Update Interval = (a - b)

- a = Completion Date and Time of Database Update
- b = Submission Date and Time of Database Change

Average Update Interval = (c / d)

- c = Sum of all Update Intervals
- d = Total Number of Updates Completed During Reporting Period

Report Structure

- CLEC Specific (Under development)
- CLEC Aggregate
- BellSouth Aggregate
- Geographic Scope
  - Region

Data Retained

Relating to CLEC Experience

- Database File Submission Time
- Database File Update Completion Time
- CLEC Number of Submissions
- Total Number of Updates

Relating to BellSouth Performance

- Database File Submission Time
- Database File Update Completion Time
- BellSouth Number of Submissions
- Total Number of Updates

SQM Disaggregation - Analog/Benchmark

SQM Level of Disaggregation	SQM Analog/Benchmark
• Database Type	Parity by Design
• LIDB	
• Directory Listings	
• Directory Assistance	

SEEM Measure

SEEM	Tier I	Tier II
No		

SEEM Disaggregation - Analog/Benchmark

SEEM Disaggregation	SEEM Analog/Benchmark
• Not Applicable	Not Applicable

D-2: Percent Database Update Accuracy

Definition

This report measures the accuracy of database updates by BellSouth for Line Information Database (LIDB) Directory Assistance and Directory Listings using a statistically valid sample of completed CLEC Service Orders in a manual review. This manual review is not conducted on BellSouth Service Orders.

Exclusions

- Updates canceled by the CLEC
- Initial update when supplemented by CLEC
- CLEC orders that had CLEC errors
- BellSouth updates associated with internal or administrative use of local services.

Business Rules

For each update reviewed during the reporting period, the original update that the CLEC sent to BellSouth is compared to the database following completion of the update by BellSouth. An update is "completed without error" if the database completely and accurately reflects the activity specified on the original and supplemental update (e.g., orders) submitted by the CLEC. Each database (e.g., LIDB, Directory Assistance and Directory Listings) should be separately tracked and reported.

A statistically valid sample of completed CLEC Service Orders is pulled each month. This metric includes updates from stand-alone directory listing orders.

Calculation

Percent Update Accuracy = (a / b) X 100

- a = Number of Updates Completed Without Error
- b = Number Updates Completed

Report Structure

- CLEC Aggregate
- CLEC Specific (not available in this report)
- BellSouth Aggregate (not available in this report)
- Geographic Scope
  - Region

Data Retained

Relating to CLEC Experience

- Report Month
- CLEC Order Number (so_nbr) and PON (PON)
- Local Service Request (LSR)
- Order Submission Date
- Number of Orders Reviewed

Note: Code in parentheses is the corresponding header found in the raw data file.

Relating to BellSouth Performance

- Not Applicable

SQM Disaggregation - Analog/Benchmark

SQM Level of Disaggregation	SQM Analog/Benchmark
• Database Type - LIDB - Directory Listings - Directory Assistance	95% Accurate

SEEM Measure

SEEM	Tier I	Tier II
No		

SEEM Disaggregation - Analog/Benchmark

SEEM Disaggregation	SEEM Analog/Benchmark
• Not Applicable	Not Applicable

D-3: Percent NXXs and LRNs Loaded by the LERG Effective Date

Definition

Measurement of the percent of NXX(s) and Location Routing Numbers LRN(s) loaded and tested in new end office and/or tandem switches by the Local Exchange Routing Guide (LERG) effective date when facilities are in place. BellSouth has a single provisioning process for both NXX(s) and LRN(s). In this measure BellSouth will identify whether or not a particular NXX has been flagged as LNP capable (set triggers for dips) by the LERG effective date.

Exclusions

- Activation requests where the CLEC's interconnection arrangements and facilities are not in place by the LERG effective date.
- Expedite requests

Business Rules

Data for the initial NXX(s) and LRN(s) in a local calling area will be based on the LERG effective date or completion of the initial interconnection trunk group(s), whichever is longer. Data for additional NXX(s) in the local calling area will be based on the LERG effective date. The LERG effective date is loaded into the system at the request of the CLEC. It is contingent upon the CLEC to engineer, order, and install interconnection arrangements and facilities prior to that date.

The total Count of NXX(s) and LRN(s) that were scheduled to be loaded and those that were loaded by the LERG effective date in BellSouth switches will be captured in the Work Force Administration - Dispatch In database.

An LRN is assigned by the owner of the switch and is placed into the software translations for every switch to be used as an administrative pointer to route NXX(s) in LNP capable switches. The LRN is a result of Local Number Porting and is housed in a national database provided by the Number Portability Administration Center (NPAC). The switch owner is responsible for notifying NPAC and requesting the effective date that will be reflected in the LERG. The national database downloads routing tables into BellSouth's Service Control Point (SCP) regional databases, which are queried by switches when routing ported numbers.

The basic NXX routing process includes the addition of all NXX(s) in the response translations. This addition to response translations is what supports LRN routing. Routing instructions for all NXX(s), including LRN(s), are received from the Advance Routing & Trunking System (ARTS) and all routing, including response, is established based on the information contained in the Translation Work Instructions (TWINs) document.

Calculation

Percent NXXs/LRNs Loaded and Tested Prior to the LERG Effective Date = (a / b) X 100

- a = Count of NXXs and LRNs loaded by the LERG effective date
- b = Total NXXs and LRNs to be scheduled and loaded by the LERG effective date

Report Structure

- CLEC Specific
- CLEC Aggregate
- BellSouth (Not Applicable)
- Geographic Scope
  - Region

Data Retained

Relating to CLEC Experience

- Company Name
- Company Code
- NPA/NXX
- LERG Effective Date
- Loaded Date

Relating to BellSouth Performance

- Not Applicable

SQM Disaggregation - Analog/Benchmark

SQM Level of Disaggregation	SQM Analog/Benchmark
• Geographic Scope - Region	100% by LERG Effective Date

SEEM Measure

SEEM	Tier I	Tier II
No		

SEEM Disaggregation - Analog/Benchmark

SEEM Disaggregation	SEEM Analog/Benchmark
• Not Applicable	Not Applicable

Section 8: E911

E-1: Timeliness

Definition

Measures the percent of batch orders for E911 database updates (to CLEC resale and BellSouth retail records) processed successfully within a 24-hour period.

Exclusions

- Any resale order canceled by a CLEC
- Facilities-based CLEC orders

Business Rules

The 24-hour processing period is calculated based on the date and time processing starts on the batch orders and the date and time processing stops on the batch orders. Mechanical processing starts when SCC (the BellSouth E911 vendor) receives E911 files containing batch orders extracted from the BellSouth Service Order Control System (SOCS). Processing stops when SCC loads the individual records to the E911 database. The E911 database includes updates to the Automatic Location Identification (ALI) database. The system makes no distinction between CLEC resale records and BellSouth retail records.

Calculation

E911 Timeliness = (a / b) X 100

- a = Number of batch orders processed within 24 hours
- b = Total number of batch orders submitted

Report Structure

Reported for the aggregate of CLEC resale updates and BellSouth retail updates

- State
- Region

Data Retained

- Report Month
- Aggregate Data

SQM Disaggregation - Analog/Benchmark

SQM Level of Disaggregation	SQM Analog/Benchmark
None	Parity by Design

SEEM Measure

SEEM	Tier I	Tier II
No		

SEEM Disaggregation - Analog/Benchmark

SEEM Disaggregation	SEEM Analog/Benchmark
• Not Applicable	Not Applicable

E-2: Accuracy

Definition

Measures the percent of E911 telephone number (TN) record updates (to CLEC resale and BellSouth retail records) processed successfully for E911 (including the Automatic Location Identification (ALI) database).

Exclusions

- Any resale order canceled by a CLEC
- Facilities-based CLEC orders

Business Rules

Accuracy is based on the number of records processed without error at the conclusion of the processing cycle. Mechanical processing starts when SCC (the BellSouth E911 vendor) receives E911 files containing telephone number (TN) records extracted from BellSouth's Service Order Control System (SOCS). The system makes no distinction between CLEC resale records and BellSouth retail records.

Calculation

E911 Accuracy = (a / b) X 100

- a = Number of record individual updates processed with no errors
- b = Total number of individual record updates

Report Structure

Reported for the aggregate of CLEC resale updates and BellSouth retail updates

- State
- Region

Data Retained

- Report Month
- Aggregate Data

SQM Disaggregation - Analog/Benchmark

SQM Level of Disaggregation	SQM Analog/Benchmark
None	Parity by Design

SEEM Measure

SEEM	Tier I	Tier II
No		

SEEM Disaggregation - Analog/Benchmark

SEEM Disaggregation	SEEM Analog/Benchmark
Not Applicable	Not Applicable

E-3: Mean Interval

Definition

Measures the mean interval processing of E911 batch orders (to update CLEC resale and BellSouth retail records) including processing against the Automatic Location Identification (ALI) database.

Exclusions

- Any resale order canceled by a CLEC
- Facilities-based CLEC orders

Business Rules

The processing period is calculated based on the date and time processing starts on the batch orders and the date and time processing stops on the batch orders. Data is posted is 4-hour increments up to and beyond 24 hours. The system makes no distinction between CLEC resale records and BellSouth retail records.

Calculation

E911 Interval = (a - b)

- a = Date and time of batch order completion
- b = Date and time of batch order submission

E911 Mean Interval = (c / d)

- c = Sum of all E911 Intervals
- d = Number of batch orders completed

Report Structure

Reported for the aggregate of CLEC resale updates and BellSouth retail updates

- State
- Region

Data Retained

- Report Month
- Aggregate Data

SQM Disaggregation - Analog/Benchmark

SQM Level of Disaggregation	SQM Analog/Benchmark
None	Parity by Design

SEEM Measure

SEEM	Tier I	Tier II
No		

SEEM Disaggregation - Analog/Benchmark

SEEM Disaggregation	SEEM Analog/Benchmark
• Not Applicable	Not Applicable

Section 9: Trunk Group Performance

TGP-1: Trunk Group Performance-Aggregate

Definition

The Trunk Group Performance report displays, over a reporting cycle, aggregate, average trunk group blocking data for each hour of each day of the reporting cycle, for both CLEC affecting and BellSouth affecting trunk groups.

Exclusions

- Trunk Groups blocked due to unanticipated significant increase in CLEC traffic
- Orders that are delayed or refused by CLEC
- Trunk Groups for which there was no valid data available for an entire study period
- Duplicate trunk group information
- Trunk Groups blocked due to CLEC network/equipment failure
- Final Groups actually overflowing, not blocked

Business Rules

The purpose of the Trunk Group Performance Report is to provide trunk blocking measurements on CLEC and BellSouth trunk groups for comparison only. It is not the intent of the report that it be used for network management and/or engineering. BellSouth should notify the CLEC when such blocking meets this exclusion criteria (orders that are delayed or refused by the CLEC) and report the results, both with and without the exclusions. An unanticipated significant increase in traffic is indicated by a 20% increase for small trunk groups or 1800 CCS for large groups over the previous months traffic when the increase was not forecasted by the CLEC.

Monthly Average Blocking:

- The reporting cycle includes both business and non-business days in a calendar month.
- Monthly average blocking values are calculated for each trunk group for each of the 24 time consistent hours across a reporting cycle.

Aggregate Monthly Blocking:

- Used to compare aggregate blocking across trunk groups which terminate traffic at CLEC points of presence versus BellSouth switches.
- Aggregate monthly blocking data is calculated for each hour of the day across all trunk groups assigned to a category.

Trunk Categorization:

- This report displays, over a reporting cycle, aggregate, average blocking data for each hour of a day. Therefore, for each reporting cycle, 24 blocking data points are generated for two aggregate groups of selected trunk groups. These groups are CLEC affecting and BellSouth affecting trunk groups. In order to assign trunk groups to each aggregate group, all trunk groups are first assigned to a category. A trunk group's end points and the type of traffic that is transmitted on it define a category. Selected categories of trunk groups are assigned to the aggregate groups so that trunk reports can be generated. The categories to which trunk groups have been assigned for this report are as follows.

CLEC Affecting Categories:

	Point A	Point B
Category 1:	BellSouth End Office	BellSouth Access Tandem
Category 3:	BellSouth End Office	CLEC Switch
Category 4:	BellSouth Local Tandem	CLEC Switch
Category 5:	BellSouth Access Tandem	CLEC Switch

Category 10:..... BellSouth End Office..... BellSouth Local Tandem

Category 16:..... BellSouth Tandem..... BellSouth Tandem

BellSouth Affecting Categories:

	Point A	Point B
Category 1:	BellSouth End Office	BellSouth Access Tandem
Category 9:	BellSouth End Office	BellSouth End Office
Category 10:	BellSouth End Office	BellSouth Local Tandem
Category 16:	BellSouth Tandem	BellSouth Tandem

Calculation

Monthly Average Blocking:

- For each hour of the day, each day's raw data are summed across all valid measurements days in a report cycle for blocked and attempted calls.
- The sum of the blocked calls is divided by the total number of calls attempted in a reporting period.

Aggregate Monthly Blocking:

- For each hour of the day, the monthly sums of the blocked and attempted calls from each trunk group are separately aggregated over all trunk groups within each assigned category.
- The total blocked calls is divided by the total call attempts within a group to calculate an aggregate monthly blocking for each assigned group.
- The result is an aggregate monthly average blocking value for each of the 24 hours by group.
- The difference between the CLEC and BellSouth affecting trunk groups are also calculated for each hour.

Report Structure

- CLEC Aggregate
- BellSouth Aggregate
  - State
- With and Without Exclusion for Orders Delayed or Refused by CLEC

Data Retained

Relating to CLEC Experience

- Report Month
- Total Trunk Groups
- Number of Trunk Groups by CLEC
- Hourly Blocking Per Trunk Group
- Hourly Usage Per Trunk Group
- Hourly Call Attempts Per Trunk Group

Related to BellSouth Performance

- Report Month
- Total Trunk Groups
- Aggregate Hourly Blocking Per Trunk Group
- Hourly Usage Per Trunk Group
- Hourly Call Attempts Per Trunk Group

SQM Disaggregation - Analog/Benchmark

SQM Level of Disaggregation	SQM Analog/Benchmark
• CLEC Aggregate	Any consecutive 2 hour period in 24 hours where CLEC blockage exceeds BellSouth blockage by more than 0.5% using trunk groups 1, 3, 4, 5, 10, 16 for CLECs and 9 for BellSouth
• BellSouth Aggregate	

SEEM Measure

SEEM	Tier I	Tier II
Yes		X

SEEM Disaggregation - Analog/Benchmark

SEEM Disaggregation	SEEM Analog/Benchmark
• CLEC Aggregate	Any consecutive 2 hour period in 24 hours where CLEC blockage exceeds BellSouth blockage by more than 0.5% using trunk groups 1,3,4,5,10,16 for CLECs and 9 for BellSouth
• BellSouth Aggregate	

TGP-2: Trunk Group Performance – CLEC Specific

Definition

The Trunk Group Performance report displays, over a reporting cycle, CLEC specific, average trunk group blocking data for each hour of each day of the reporting cycle, for both CLEC affecting and BellSouth affecting trunk groups.

Exclusions

- Trunk Groups blocked due to unanticipated significant increase in CLEC traffic
- Orders that are delayed or refused by CLEC
- Trunk Groups for which there was no valid data available for an entire study period
- Duplicate trunk group information
- Trunk Groups blocked due to CLEC network/equipment failure
- Final Groups actually overflowing not blocked

Business Rules

The purpose of the Trunk Group Performance Report is to provide trunk blocking measurements on CLEC and BellSouth trunk groups for comparison only. It is not the intent of the report that it be used for network management and/or engineering. BellSouth should notify the CLEC when such blocking meets this exclusion criteria (orders that are delayed or refused by the CLEC) and report the results, both with and without the exclusions. An unanticipated significant increase in traffic is indicated by a 20% increase for small trunk groups or 1800 CCS for large groups over the previous months traffic when the increase was not forecasted by the CLEC.

Monthly Average Blocking:

- The reporting cycle includes both business and non-business days in a calendar month.
- Monthly average blocking values are calculated for each trunk group for each of the 24 time consistent hours across a reporting cycle.

Aggregate Monthly Blocking:

- Used to compare aggregate blocking across trunk groups which terminate traffic at CLEC points of presence versus BellSouth switches.
- Aggregate monthly blocking data is calculated for each hour of the day across all trunk groups assigned to a category.

Trunk Categorization:

- This report displays, over a reporting cycle, aggregate, average blocking data for each hour of a day. Therefore, for each reporting cycle, 24 blocking data points are generated for two aggregate groups of selected trunk groups. These groups are CLEC affecting and BellSouth affecting trunk groups. In order to assign trunk groups to each aggregate group, all trunk groups are first assigned to a category. A trunk group's end points and the type of traffic that is transmitted on it define a category. Selected categories of trunk groups are assigned to the aggregate groups so that trunk reports can be generated. The categories to which trunk groups have been assigned for this report are as follows.

CLEC Affecting Categories:

	Point A	Point B
Category 1:	BellSouth End Office	BellSouth Access Tandem
Category 3:	BellSouth End Office	CLEC Switch
Category 4:	BellSouth Local Tandem	CLEC Switch
Category 5:	BellSouth Access Tandem	CLEC Switch
Category 10:	BellSouth End Office	BellSouth Local Tandem

Category 16:..... BellSouth Tandem..... BellSouth Tandem

BellSouth Affecting Categories:

	Point A	Point B
Category 1:	BellSouth End Office	BellSouth Access Tandem
Category 9:	BellSouth End Office	BellSouth End Office
Category 10:	BellSouth End Office	BellSouth Local Tandem
Category 16:	BellSouth Tandem	BellSouth Tandem

Calculation

Monthly Average Blocking:

- For each hour of the day, each day's raw data are summed across all valid measurements days in a report cycle for blocked and attempted calls.
- The sum of the blocked calls is divided by the total number of calls attempted in a reporting period.

Aggregate Monthly Blocking:

- For each hour of the day, the monthly sums of the blocked and attempted calls from each trunk group are separately aggregated over all trunk groups within each assigned category.
- The total blocked calls is divided by the total call attempts within a group to calculate an aggregate monthly blocking for each assigned group.
- The result is an aggregate monthly average blocking value for each of the 24 hours by group.
- The difference between the CLEC and BellSouth affecting trunk groups are also calculated for each hour.

Report Structure

- CLEC Specific
  - State
- With and Without Exclusion for Orders Delayed or Refused by CLEC

Data Retained

Relating to CLEC Experience

- Report Month
- Total Trunk Groups
- Number of Trunk Groups by CLEC
- Hourly Blocking Per Trunk Group
- Hourly Usage Per Trunk Group
- Hourly Call Attempts Per Trunk Group

Relating to BellSouth Performance

- Report Month
- Total Trunk Groups
- Aggregate Hourly Blocking Per Trunk Group
- Hourly Usage Per Trunk Group
- Hourly Call Attempts Per Trunk Group

SQM Disaggregation - Analog/Benchmark

SQM Level of Disaggregation	SQM Analog/Benchmark
• CLEC Trunk Group	Any 2 consecutive hour period in 24 hours where CLEC blockage exceeds BellSouth blockage by more than 0.5% using trunk groups 1, 3, 4, 5, 10, 16 for CLECs and 9 for BellSouth

SEEM Measure

SEEM	Tier I	Tier II
Yes	X	

SEEM Disaggregation - Analog/Benchmark

SEEM Disaggregation	SEEM Analog/Benchmark
• CLEC Trunk Group	Any 2 consecutive hour period in 24 hours where CLEC blockage exceeds BellSouth blockage by more than 0.5% using trunk groups 1, 3, 4, 5, 10, 16 for CLECs and 9 for BellSouth
• BellSouth Trunk Group	

Section 10: Collocation

C-1: Collocation Average Response Time

Definition

Measures the average time (counted in calendar days) from the receipt of a complete and accurate collocation application (including receipt of application fee if required) to the date BellSouth returns a response electronically or in writing. Within the number of calendar days as designated by the Collocation order after having received a bona fide application for physical collocation, BellSouth must respond with space availability and a price quote.

Exclusions

Any application canceled by the CLEC

Business Rules

The clock starts on the date that BellSouth receives a complete and accurate collocation application accompanied by the appropriate application fee if required. The clock stops on the date that BellSouth returns a response. The clock will restart upon receipt of changes to the original application request.

Calculation

Response Time = (a - b)

- a = Request Response Date
- b = Request Submission Date

Average Response Time = (c / d)

- c = Sum of all Response Times
- d = Count of Responses Returned within Reporting Period

Report Structure

- Individual CLEC (alias) aggregate
- Aggregate of all CLECs
- Geographic Scope
  - State

Data Retained

- Report period
- Aggregate data

SQM Disaggregation - Analog/Benchmark

SQM Level of Disaggregation	SQM Analog/Benchmark
State	Virtual - 15 Calendar Days
Virtual-Initial	Physical Caged - 15 Calendar Days
Virtual-Augment	Physical Cageless - 15 Calendar Days
Physical Caged-Initial	
Physical Caged-Augment	
Physical-Cageless-Initial	
Physical Cageless-Augment	

SEEM Measure

SEEM	Tier I	Tier II
No		

SEEM Disaggregation - Analog/Benchmark

SEEM Disaggregation	SEEM Analog/Benchmark
• Not Applicable	Not Applicable

C-2: Collocation Average Arrangement Time

Definition

Measures the average time (counted in calendar days) from receipt of a complete and accurate Bona Fide firm order (including receipt of appropriate fee if required) to the date BellSouth completes the collocation arrangement and notifies the CLEC.

Exclusions

Any Bona Fide firm order canceled by the CLEC

Business Rules

The clock starts on the date that BellSouth receives a complete and accurate Bone Fide firm order accompanied by the appropriate fee. The clock stops on the date that BellSouth completes the collocation arrangement and notifies the CLEC. The cable assignments associated with the specific collocation request will be provided prior to completion of the arrangement.

Calculation

Arrangement Time = (a - b)

- a = Date Collocation Arrangement is Complete
- b = Date Order for Collocation Arrangement Submitted

Average Arrangement Time = (c / d)

- c = Sum of all Arrangement Times
- d = Total Number of Collocation Arrangements Completed during Reporting Period

Report Structure

- Individual CLEC (alias) Aggregate
- Aggregate of all CLECs
- Geographic Scope
  - State

Data Retained

- Report Period
- Aggregate Data

SQM Disaggregation - Analog/Benchmark

SQM Level of Disaggregation	SQM Analog/Benchmark
• State	Virtual - 60 Calendar Days
• Virtual-Initial	Virtual-Augment - 60 Calendar Days (Without Space Increase)
• Virtual-Augment	Virtual-Augment - 60 Calendar Days (With Space Increase)
• Physical Caged-Initial	Physical Caged - 90 Calendar Days (Ordinary)
• Physical Caged-Augment	Physical Caged-Augment - 45 Calendar Days (Without Space Increase)
• Physical Cageless-Initial	Physical Caged-Augment - 90 Calendar Days (With Space Increase)
• Physical Cageless-Augment	Physical Cageless - 90 Calendar Days Physical Cagedless-Augment - 45 Calendar Days (Without

Space Increase)
Physical Cagedless-Augment - 90 Calendar Days (With Space Increase)

SEEM Measure

SEEM	Tier I	Tier II
No		

SEEM Disaggregation - Analog/Benchmark

SEEM Disaggregation	SEEM Analog/Benchmark
• Not Applicable	Not Applicable

C-3: Collocation Percent of Due Dates Missed

Definition

Measures the percent of missed due dates for both virtual and physical collocation arrangements

Exclusions

Any Bona Fide firm order canceled by the CLEC

Business Rules

Percent Due Dates Missed is the percent of total collocation arrangements which BellSouth is unable to complete by end of the BellSouth committed due date. The arrangement is considered a missed due date if it is not completed on or before the committed due date.

Calculation

% of Due Dates Missed = (a / b) X 100

- a = Number of Completed Orders that were not completed by BellSouth Committed Due Date during Reporting Period
- b = Number of Orders Completed in Reporting Period

Report Structure

- Individual CLEC (alias) aggregate
- Aggregate of all CLECs
- Geographic Scope
  - State

Data Retained

- Report Period
- Aggregate Data

SQM Disaggregation - Analog/Benchmark

SQM Level of Disaggregation	SQM Analog/Benchmark
State	>= 95% on time
Virtual-Initial	
Virtual- Augment	
Physical Caged- Initial	
Physical Caged- Augment	
Physical Cageless- Initial	
Physical Cageless- Augment	

SEEM Measure

SEEM	Tier I	Tier II
Yes	X	X

SEEM Disaggregation - Analog/Benchmark

SEEM Disaggregation	SEEM Analog/Benchmark
• All Collocation Arrangements	>= 95% on time

Section 11: Change Management

CM-1: Timeliness of Change Management Notices

Definition

Measures whether CLECs receive required software release notices on time to prepare for BellSouth interface/system changes so CLEC interfaces are not impaired by change.

Exclusions

- Changes to release dates for reasons outside BellSouth control, such as the system software vendor changes. For example: a patch to fix a software problem.
- Type 6 Change Requests (Defects/Expedites), as defined by the Change Control Process (CCP)

Business Rules

This metric is designed to measure the percent of change management notices sent to the CLECs according to notification standards and time frames set forth in the Change Control Process. The CCP is used by BellSouth and the CLECs to manage requested changes to the BellSouth Local Interfaces.

The clock starts on the notification date. The clock stops on the software release date. When project events occur (scope changes, analysis information, etc.), the software release date may change. A revised notification would be required and the clock would restart. Based on release constraints for defects/expedites, notification may be less than the agreed upon interval in the CCP for new features.

Calculation

Timeliness of Change Management Notices = (a / b) X 100

- a = Total number of Change Management Notifications Sent Within Required Time frames
- b = Total Number of Change Management Notifications Sent

Report Structure

- BellSouth Aggregate
- Geographic Scope
  - Region

Data Retained

- Report Period
- Notice Date
- Release Date

SQM Disaggregation - Analog/Benchmark

SQM Level of Disaggregation	SQM Analog/Benchmark
• Region	98% on time

SEEM Measure

SEEM	Tier I	Tier II
Yes		X

SEEM Disaggregation - Analog/Benchmark

SEEM Disaggregation	SEEM Analog/Benchmark
• Region	98% on time

CM-2: Change Management Notice Average Delay Days

Definition

Measures the average delay days for change management system release notices sent outside the time frame set forth in the Change Control Process.

Exclusions

- Changes to release dates for reasons outside BellSouth control, such as the system vendor
- Type 6 Change Requests (Defects/Expedites), as defined by the Change Control Process

Business Rules

This metric is designed to compute the average delay days for change management notices sent to the CLECs outside the time frames set forth in the Change Control Process. The CCP is used by BellSouth and the CLECs to manage requested changes to the BellSouth Local Interfaces.

The clock starts on the notification due date. The clock stops on the software release date. When project events occur (scope changes, analysis information, etc.), the software release date may change. A revised notification would be required and the clock would restart. Based on release constraints for defects/expedites, notification may be less than the agreed upon interval in the CCP for new features

Calculation

Change Management Notice Delay Days = (a - b)

- a = Date Notice Sent
- b = Date Notice Due

Change Management Notice Average Delay Days = (c / d)

- c = Sum of all Change Management Notice Delay Days
- d = Total Number of Notices Sent Late

Report Structure

- BellSouth Aggregate
- Geographic Scope
  - Region

Data Retained

- Report Period
- Notice Date
- Release Date

SQM Disaggregation - Analog/Benchmark

SQM Level of Disaggregation	SQM Analog/Benchmark
• Region	<= 5 Days

SEEM Measure

SEEM	Tier I	Tier II
No		

SEEM Disaggregation - Analog/Benchmark

SEEM Disaggregation	SEEM Analog/Benchmark
• Not Applicable	Not Applicable

CM-3: Timeliness of Documents Associated with Change

Definition

Measures whether CLECs received requirements or business rule documentation on time to prepare for BellSouth interface/system changes so CLEC interfaces are not impaired by change.

Exclusions

- Documentation for release dates that slip less than 30 days for a change mandated by regulatory or legal entities (Federal Communications Commission [FCC], a state commission/authority, or state and federal courts) or CLEC request.
- Type 6 Change Requests (Defects/Expedites), as defined by the Change Control Process.

Business Rules

This metric is designed to measure the percent of requirements or business rule documentation sent to the CLECs according to documentation standards and time frames set forth in the Change Control Process, a copy of which can be found at http://www.interconnection.bellsouth.com/markets/lec/ccp_live/index.html. The CCP is used by BellSouth and the CLECs to manage requested changes to the BellSouth Local Interfaces.

The clock starts on the business rule documentation release date. The clock stops on the software release date. When project events occur (scope changes, analysis information, etc.), the software release date may change. Revisions to documentation could be required and the clock would restart.

Calculation

Timeliness of Documents Associated with Change = (a / b) X 100

- a = Change Management Documentation Sent Within Required Time frames after Notices
- b = Total Number of Change Management Documentation Sent

Report Structure

- BellSouth Aggregate
- Geographic Scope
  - Region

Data Retained

- Report Period
- Notice Date
- Release Date

SQM Disaggregation - Analog/Benchmark

SQM Level of Disaggregation	SQM Analog/Benchmark
• Region	98% on Time

SEEM Measure

SEEM	Tier I	Tier II
Yes		X

SEEM Disaggregation - Analog/Benchmark

SEEM Disaggregation	SEEM Analog/Benchmark
• Region	98% on Time

CM-4: Change Management Documentation Average Delay Days

Definition

Measures the average delay days for requirements or business rule documentation sent outside the time frames set forth in the Change Control Process.

Exclusions

- Documentation for release dates that slip less than 30 days for reasons outside BellSouth control, such as changes due to Regulatory mandate or CLEC request.
- Type 6 Change Requests (Defects/Expedites), as defined by the Change Control Process.

Business Rules

This metric is designed to compute the average delay days for business rule documentation sent to the CLECs outside the time frames set forth in the Change Control Process. The CCP is used by BellSouth and the CLECs to manage requested changes to the BellSouth Local Interfaces.

The clock starts on the business rule documentation release date. The clock stops on the software release date. When project events occur (scope changes, analysis information, etc.), the software release date may change. Revisions to documentation could be required and the clock would restart.

Calculation

Change Management Documentation Delay Days = (a - b)

- a = Date Documentation Provided
- b = Date Documentation Due

Change Management Documentation Average Delay Days = (c / d)

- c = Sum of all CM Documentation Delay Days
- d = Total Change Management Documents Sent

Report Structure

- BellSouth Aggregate
- Geographic Scope
  - Region

Data Retained

- Report Period
- Notice Date
- Release Date

SQM Disaggregation - Analog/Benchmark

SQM Level of Disaggregation	SQM Analog/Benchmark
• Region	<= 5 Days

SEEM Measure

SEEM	Tier I	Tier II
No		

SEEM Disaggregation - Analog/Benchmark

SEEM Disaggregation	SEEM Analog/Benchmark
• Not Applicable	Not Applicable

CM-5: Notification of CLEC Interface Outages

Definition

Measures the time it takes BellSouth to notify the CLEC of an outage of an interface.

Exclusions

None

Business Rules

This metric measures the process of notifying CLECs of an interface outage as defined by the Change Control Process Documentation. BellSouth has 15 minutes to notify the CLECs via email, once the Help Desk has verified the existence of an outage. An outage is verified to exist when on or more of the following conditions occur:

1. BellSouth can duplicate a CLEC reported error.
2. BellSouth finds an error message within the system error log that identifiably matches a CLEC reported outage.
3. When 3 or more CLECs report the identical type of outage.
4. BellSouth detects a problem due to the loss of functionality for users of a system.

Note: The 15 minute clock begins once a CLEC reported or a BellSouth detected outage has lasted for 20 minutes and has been verified. If the outage is not verified within 20 minutes, the clock begins at the point of verification.

This metric will be expressed as a percentage.

Calculation

Notification of CLEC Interface Outages = (a / b) X 100

- a = Number of Interface Outages where CLECs are notified within 15 minutes
- b = Total Number of Interface Outages

Report Structure

- CLEC Aggregate
- Geographic Scope
  - Region

Data Retained

Relating to CLEC Experience

- Number of Interface Outages
- Number of Notifications <= 15 minutes

Relating to BellSouth Performance

- Not Applicable

SQM Disaggregation - Analog/Benchmark

SQM Level of Disaggregation	SQM Analog/Benchmark
• By interface type for all interfaces accessed by CLECs	97% <= 15 Minutes

Interface	Applicable to
EDI	CLEC
CSOTS	CLEC
LENS	CLEC
TAG	CLEC
ECTA	CLEC
TAFI	CLEC/BellSouth

SEEM Measure

SEEM	Tier I	Tier II
No		

SEEM Disaggregation - Analog/Benchmark

SEEM Disaggregation	SEEM Analog/Benchmark
• Not Applicable	Not Applicable

CM-6: Percent of Software Errors Corrected in "X" (10, 30, 45) Business Days

Definition

Measures the percent of all outstanding Software Errors due and overdue to be corrected by BellSouth in "X" (10, 30, 45) business days within the monthly report period.

Exclusions

- Software Corrections having implementation intervals that are longer than those defined in this measure and agreed upon by the CLECs
- Rejected or reclassified software errors (BellSouth must report the number of rejected or reclassified software errors disputed by the CLECs)

Business Rules

This metric is designed to measure BellSouth's performance each month in correcting identified Software Errors within the specified interval. The clock starts when a Software Error validated per the Change Control Process, a copy of which can be found at http://www.interconnection.bellsouth.com/markets/lec/ccp_live/index.html, and stops when the error is corrected and notice posted to the Change Control Website. The monthly report should include all defects due and overdue to be corrected within the report period. Software defects are defined as Type 6 Change Requests in the Change Control Process.

Calculation

Percent of Software Errors Corrected in "X" (10, 30, 45) Business Days = (a / b) X 100

- a = Total number of Software Errors Corrected where "X" = 10, 30, or 45 Business Days.
- b = Total number of Software Errors requiring correction where "X" = 10, 30, or 45 Business Days.

Report Structure

- Severity 2 = 10 Business Days
- Severity 3 = 30 Business Days
- Severity 4 = 45 Business Days

Data Retained

- Report Period
- Total Completed
- Total Completed within "X" Business Days
- Disputed, Rejected or Reclassified Software Errors

SQM Level of Disaggregation - Analog/Benchmark

SQM Level of Disaggregation	SQM Analog/Benchmark
• Region	95% within interval

SEEM Measure

SEEM	Tier I	Tier II
Yes		X

SEEM Disaggregation - Analog/Benchmark

SEEM Disaggregation	SEEM Analog/Benchmark
• Region	95% within interval

CM-7: Percent of Change Requests Accepted or Rejected within 10 Days

Definition

Measures the percent of Change Requests other than Type 1 or Type 6 Change Requests, submitted by CLECs that are Accepted or Rejected by BellSouth in 10 business days within the report period.

Exclusions

- Change Requests that are canceled or withdrawn before a response from BellSouth is due.

Business Rules

The Acceptance/Rejection interval starts when the acknowledgement is due to the CLEC per the Change Control Process, a copy of which can be found at http://www.interconnection.bellsouth.com/markets/lec/ccp_live/index.html. The clock ends when BellSouth issues an acceptance or rejection notice to the CLEC. This metric includes all change requests not subject to the above exclusions, not just those received and accepted or rejected in the reporting period.

Calculation

Percent of Change Requests Accepted or Rejected within 10 Business Days = (a / b) X 100

- a = Total number of Change Requests accepted or rejected within 10 business days
- b = Total number of Change Requests submitted in the reporting period

Report Structure

- BellSouth Aggregate

Data Retained

- Report Period
- Requests Accepted or Rejected
- Total Requests

SQM Level of Disaggregation - Analog/Benchmark

SQM Level of Disaggregation	SQM Analog/Benchmark
• Region	95% within interval

SEEM Measure

SEEM	Tier I	Tier II
Yes		X

SEEM Disaggregation - Analog/Benchmark

SEEM Disaggregation	SEEM Analog/Benchmark
• Region	95% within interval

CM-8: Percent Change Requests Rejected

Definition

Measures the percent of Change Requests (other than Type 1 or Type 6 Change Requests) submitted by CLECs that are rejected by reason within the report period.

Exclusions

- Change Requests that are canceled or withdrawn before a response from BellSouth is due.

Business Rules

This metric includes any rejected change requests in the reporting period, regardless of whether received early or late. The metric will be disaggregated by major categories of rejections per the Change Control Process, a copy of which can be found at http://www.interconnection.bellsouth.com/markets/lec/ccp_live/index.html. These reasons are: Cost, Technical Feasibility, and Industry Direction. This metric includes all change requests not subject to the above exclusions, not just those received and accepted or rejected in the same reporting period.

Calculation

Percent Change Requests Rejected = (a / b) X 100

- a = Total number of Change Requests rejected
- b = Total number of Change Requests submitted within the report period

Report Structure

- BellSouth Aggregate
- Cost
- Technical Feasibility

Data Retained

- Report Period
- Requests Rejected
- Total Requests

SQM Level of Disaggregation - Analog/Benchmark

SQM Level of Disaggregation	SQM Analog/Benchmark
Region	Diagnostic
Reason – Cost	
Reason – Technical Feasibility	
Reason – Industry Direction	

SEEM Measure

SEEM	Tier I	Tier II
No		

SEEM Disaggregation - Analog/Benchmark

SEEM Disaggregation	SEEM Analog/Benchmark
• Not Applicable	Not Applicable

CM-9: Number of Defects in Production Releases (Type 6 CR)

Definition

Measures the number of defects in Production Releases. This measure will be presented as the number of Type 6 Severity 1 defects, the number of Type 6 Severity 2 defects without a mechanized work around, and the number of Type 6 Severity 3 defects resulting within a three week period from a Production Release date. The definition of Type 6 Change Requests (CR) and Severity 1, Severity 2, and Severity 3 defects can be found in the Change Control Process Document.

Exclusions

None

Business Rules

This metric measures the number of Type 6 Severity 1 defects, the number of Type 6 Severity 2 defects without a mechanized work around, and the number of Type 6 Severity 3 defects resulting within a three week period from a Production Release date. The definitions of Type 6 Change Requests (CR) and Severity 1, 2, and 3 defects can be found in the Change Control Process, which can be found at http://www.interconnection.bellsouth.com/markets/lec/ccp_live/index.html.

Calculation

The number of Type 6 Severity 1 Defects, the number of Type 6 Severity 2 Defects without a mechanized work around, and the number of Type 6 Severity 3 defects.

Report Structure

- Production Releases
- Number of Type 6 Severity 1 defects
- Number of Type 6 Severity 2 defects without a mechanized work around
- Number of Type 6 Severity 3 defects

Data Retained

- Region
- Report Period
- Production Releases
- Number of Type 6 Severity 1 defects
- Number of Type 6 Severity 2 defects without a mechanized work around
- Number of Type 6 Severity 3 defects

SQM Level of Disaggregation - Analog/Benchmark

SQM Level of Disaggregation	SQM Analog/Benchmark
Region—Number of Type 6 Severity 1 Defects	0 Defects
Region—Number of Type 6 Severity 2 Defects	0 Defects without a mechanized work around
Region—Number of Type 6 Severity 3 Defects	0 Defects

SEEM Measure

SEEM	Tier I	Tier II
No		

SEEM Disaggregation **SEEM Analog/Benchmark**

- Not Applicable ..... Not Applicable

CM-10: Software Validation

Definition

Measures software validation test results for Production Releases of BellSouth Local Interfaces.

Exclusions

None

Business Rules

BellSouth maintains a test deck of transactions that are used to validate that functionality in software Production Releases work as designed. Each transaction in the test deck is assigned a weight factor, which is based on the weights that have been assigned to the metrics. Within the software validation metric weight factors will be allocated among transaction types (e.g., Pre-Order, Order Resale, Order UNE, Order UNE-P) and then equally distributed across transactions within the specific type.

BellSouth will begin to execute the software validation test deck within one (1) business day following a Production Release. Test deck transactions will be executed using Production Release software in the CAVE environment. Within seven (7) business days following completion of the Production Release software validation test in CAVE, BellSouth will report the number of test deck transactions that failed. Each failed transaction will be multiplied by the transaction's weight factor.

A transaction is considered failed if the request cannot be submitted or processed, or results in incorrect or improperly formatted data.

The test deck scenario weight table can be found in the Change Control Process, a copy of which can be found at http://www.interconnection.bellsouth.com/markets/lec/ccp_live/index.html.

Calculation

This software validation metric is defined as the ratio of the sum of the weights of failed transactions using Production Release software in CAVE to the sum of the weights of all transactions in the test deck.

- Numerator = Sum of weights of failed transactions
- Denominator = Sum of weights of all transactions in the test deck

Report Structure

- BellSouth Aggregate

Data Retained

- Report Period
- Production Release Number
- Test Deck Weights
- % Test Deck Weight Failure

SQM Level of Disaggregation - Analog/Benchmark

SQM Level of Disaggregation	SQM Analog/Benchmark
• Region	<= 5%

SEEM Measure

SEEM	Tier I	Tier II
No		

SEEM Disaggregation	SEEM Analog/Benchmark
• Not Applicable	Not Applicable

CM-11: Percent of Change Requests Implemented within 60 Weeks of Prioritization

Definition

Measures whether BellSouth provides CLECs timely implementation of prioritized change requests.

Exclusions

- Change requests that are implemented later than 60 weeks with the consent of the CLECs
- Change requests for which BellSouth has regulatory authority to exceed the interval

Business Rules

This metric is designed to measure BellSouth's monthly performance in implementing prioritized change requests. The clock starts when a change request has first been prioritized as described in the Change Control Process. The clock stops when the change request has been implemented by BellSouth and made available to the CLECs. BellSouth will begin reporting this monthly measure with the next release for diagnostic purposes, and will be measured for SEEM purposes 60 weeks from first prioritization meeting following Commission approval of this measure.

Calculation

Percent of Type 5 CLEC initiated Change Requests implemented on time = (a / b) X 100

- a = Total number of prioritized Type 5 Change Requests implemented each month that are less than or equal to 60 weeks of age from the date of their first prioritization plus all other prioritized change requests existing at the end of the month that are less than or equal to 60 weeks of age from prioritization.

- b = All entries in "a" above plus all Type 5 Change Requests prioritized more than 60 weeks before the end of the monthly reporting period.

Percent of Type 4 BellSouth initiated Change Requests implemented on time = (a / b) X 100

- a = Total number of prioritized Type 4 Change Requests implemented each month that are less than or equal to 60 weeks of age from the date of the release prioritization list plus all other Type 4 prioritized change requests existing at the end of the month that are less than or equal to 60 weeks of age from prioritization.

- b = All entries in "a" above plus all Type 4 Change Requests prioritized more than 60 weeks before the end of the monthly reporting period.

Report Structure

- BellSouth Aggregate
- Type 4 requests implemented
- Type 5 requests implemented
- % implemented within 16, 32, 48, and 60 weeks

Data Retained

- Region
- Report Month
- Total implemented by type
- Total implemented within 60 weeks

SQM Level of Disaggregation - Analog/Benchmark

SQM Level of Disaggregation	SQM Analog/Benchmark
• Region	95% within interval
• Type 4 requests implemented	95% within interval
• Type 5 requests implemented	95% within interval

SEEM Measure

SEEM	Tier I	Tier II	Tier III
Yes		X	

SEEM Disaggregation	SEEM Analog/Benchmark
• Region	95% within interval

Appendix A: Reporting Scope

A-1: Standard Service Groupings

See individual reports in the body of the SQM.

A-2: Standard Service Order Activities

These are the generic BellSouth/CLEC service order activities which are included in the Pre-Ordering, Ordering, and Provisioning sections of this document. It is not meant to indicate specific reporting categories.

Service Order Activity Types

- Service Migrations Without Changes
- Service Migrations With Changes
- Move and Change Activities
- Service Disconnects (Unless noted otherwise)
- New Service Installations

Pre-Ordering Query Types

- Address
- Telephone Number
- Appointment Scheduling
- Customer Service Record
- Feature Availability
- Service Inquiry

Maintenance Query Types

TAFI - TAFI queries the systems below

- CRIS
- March
- Predictor
- LMOS
  - DLR
  - DLETH
  - LMOSupd
- LNP
- NIW
- OSPCM
- SOCS

Report Levels

- CLEC RESH
- CLEC State
- CLEC Region
- Aggregate CLEC State
- Aggregate CLEC Region
- BellSouth State
- BellSouth Region

Appendix B: Glossary of Acronyms and Terms

Symbols used in calculations

Σ
A mathematical symbol representing the sum of a series of values following the symbol.

-
A mathematical operator representing subtraction.

+
A mathematical operator representing addition.

/
A mathematical operator representing division.

<
A mathematical symbol that indicates the metric on the left of the symbol is less than the metric on the right.

<=
A mathematical symbol that indicates the metric on the left of the symbol is less than or equal to the metric on the right.

>
A mathematical symbol that indicates the metric on the left of the symbol is greater than the metric on the right.

>=
A mathematical symbol that indicates the metric on the left of the symbol is greater than or equal to the metric on the right.

( )
Parentheses, used to group mathematical operations which are completed before operations outside the parentheses.

A

ACD
Automatic Call Distributor - A service that provides status monitoring of agents in a call center and routes high volume incoming telephone calls to available agents while collecting management information on both callers and attendants.

Aggregate
Sum total of all items in like category, e.g. CLEC aggregate equals the sum total of all CLECs' data for a given reporting level.

ALEC
Alternative Local Exchange Company = FL CLEC

ADSL
Asymmetrical Digital Subscriber Line

ASR
Access Service Request - A request for access service terminating delivery of carrier traffic into a Local Exchange Carrier's network.

ATLAS

Application for Telephone Number Load Administration System - The BellSouth Operations System used to administer the pool of available telephone numbers and to reserve selected numbers from the pool for use on pending service requests/service orders.

ATLASTN
ATLAS software contract for Telephone Number.

Auto Clarification
The number of LSRs that were electronically rejected from LESOG and electronically returned to the CLEC for correction.

B

BFR:
Bona Fied Request

BILLING
The process and functions by which billing data is collected and by which account information is processed in order to render accurate and timely billing.

BOCRIS
Business Office Customer Record Information System (Front-end to the CRIS database.)

BRI
Basic Rate ISDN

BRC
Business Repair Center – The BellSouth Business Systems trouble receipt center which serves large business and CLEC customers.

BellSouth
BellSouth Telecommunications, Inc.

C

CABS
Carrier Access Billing System

CCC
Coordinated Customer Conversions

CCP
Change Control Process

Centrex
A business telephone service, offered by local exchange carriers, which is similar to a Private Branch Exchange (PBX) but the switching equipment is located in the telephone company Central Office (CO).

CKTID
A unique identifier for elements combined in a service configuration

CLEC
Competitive Local Exchange Carrier

CLP
Competitive Local Provider = NC CLEC

CM
Change Management

CMDS
Centralized Message Distribution System - Telcordia administered national system used to transfer specially formatted messages among companies.

COFFI
Central Office Feature File Interface - Provides information about USOCs and class of service. COFFI is a part of DOE/SONGS. It indicates all services available to a customer.

CRIS
Customer Record Information System - This system is used to retain customer information and render bills for telecommunications service.

CRSACCTS
CRIS software contract for CSR information

CRSG
Complex Resale Support Group

C-SOTS
CLEC Service Order Tracking System

CSR
Customer Service Record

CTTG
Common Transport Trunk Group - Final trunk groups between BellSouth & Independent end offices and the BellSouth access tandems.

D

DA
Directory Assistance

DESIGN
Design Service is defined as any Special or Plain Old Telephone Service Order which requires BellSouth Design Engineering Activities.

DISPOSITION & CAUSE
Types of trouble conditions, e.g. No Trouble Found, Central Office Equipment, Customer Premises Equipment, etc.

DLETH
Display Lengthy Trouble History - A history report that gives all activity on a line record for trouble reports in LMOS.

DLR
Detail Line Record - A report that gives detailed line record information on records maintained in LMOS

DS-0
The worldwide standard speed for one digital voice signal (64000 bps).

DS-1
24 DS-0s (1.544Mb/sec., i.e. carrier systems)

DOE
Direct Order Entry System - An internal BellSouth service order entry system used by BellSouth Service Representatives to input business service orders in BellSouth format.

DSAP
DOE (Direct Order Entry) Support Application - The BellSouth Operations System which assists a Service Representative or similar carrier agent in negotiating service provisioning commitments for non-designed services and Unbundled Network Elements.

DSAPDDI
DSAP software contract for schedule information.

DSL
Digital Subscriber Line

DUI
Database Update Information

E

E911
Provides callers access to the applicable emergency services bureau by dialing a 3-digit universal telephone number.

EDI
Electronic Data Interchange - The computer-to-computer exchange of inter and/or intra-company business documents in a public standard format.

ESSX
BellSouth Centrex Service

F G

Fatal Reject
The number of LSRs that were electronically rejected from LEO, which checks to see of the LSR has all the required fields correctly populated.

Flow-Through
In the context of this document, LSRs submitted electronically via the CLEC mechanized ordering process that flow through to the BellSouth OSS without manual or human intervention.

FOC
Firm Order Confirmation - A notification returned to the CLEC confirming that the LSR has been received and accepted, including the specified commitment date.

FX
Foreign Exchange

H

HAL
“Hands Off” Assignment Logic - Front end access and error resolution logic used in interfacing BellSouth Operations Systems such as ATLAS, BOCRIS, LMOS, PSIMS, RSAG and SOCS.

HALCRIS
HAL software contract for CSR information

HDSL
High Density Subscriber Loop/Line

I J K

ILEC
Incumbent Local Exchange Company

INP
Interim Number Portability

ISDN
Integrated Services Digital Network

IPC
Interconnection Purchasing Center

L

LAN
Local Area Network

LAUTO
The automatic processor in the LNP Gateway that validates LSRs and issues service orders.

LCSC
Local Carrier Service Center - The BellSouth center which is dedicated to handling CLEC LSRs, ASRs, and Preordering transactions along with associated expedite requests and escalations.

Legacy System
Term used to refer to BellSouth Operations Support Systems (see OSS)

LENS
Local Exchange Negotiation System - The BellSouth LAN/web server/OS application developed to provide both preordering and ordering electronic interface functions for CLECs.

LEO
Local Exchange Ordering - A BellSouth system which accepts the output of EDI, applies edit and formatting checks, and reformats the Local Service Requests in BellSouth Service Order format.

LERG
Local Exchange Routing Guide

LESOG
Local Exchange Service Order Generator - A BellSouth system which accepts the service order output of LEO and enters the Service Order into the Service Order Control System using terminal emulation technology.

LFACS
Loop Facilities Assessment and Control System

LIDB
Line Information Database

LMOS
Loop Maintenance Operations System - A system that provides a mechanized means of maintaining customer line records and for entering, processing, and tracking trouble reports.

LMOS HOST

LMOS host computer

LMOSupd
LMOS update allows trouble tickets on line records to be entered into LMOS.

LMU
Loop Make-up

LMUS
Loop Make-up Service Inquiry

LNP
Local Number Portability - In the context of this document, the capability for a subscriber to retain his current telephone number as he transfers to a different local service provider.

LNP Gateway
Local Number Portability (gateway)- A system that provides both internal and external communications with various interfaces and process including:

(1). Linking BellSouth to the Number Portability Administration Center (NPAC).

(2). Allowing for inter-company communications between BellSouth and the CLECs for electronic ordering.

(3). Providing interface between NPAC and AIN SMS for LNP routing processes.

LOOPS
Transmission paths from the central office to the customer premises.

LRN
Location Routing Number

LSR
Local Service Request – A request for local resale service or unbundled network elements from a CLEC.

M

Maintenance & Repair
The process and function by which trouble reports are passed to BellSouth and by which the related service problems are resolved.

MARCH
A memory administration system that translates line-related service order data into switch provisioning messages and automatically transmits the messages to targeted stored program control system switches.

N

NBR
New Business Request

NC
“No Circuits” - All circuits busy announcement.

NIW
Network Information Warehouse - A system that stores central office blockage data for use in processing trouble reports.

NMLI
Native Mode LAN Interconnection

NPA
Numbering Plan Area

NXX
The "exchange" portion of a telephone number.

O

OASIS
Obtain Availability Services Information System - A BellSouth front-end processor, which acts as an interface between COFFI and RNS. This system takes the USOCs in COFFI and translates them to English for display in RNS.

OASISBSN
OASIS software contract for feature/service

OASISNET
OASIS software contract for feature/service

OASISOCP
OASIS software contract for feature/service

ORDERING
The process and functions by which resale services or unbundled network elements are ordered from BellSouth as well as the process by which an LSR or ASR is placed with BellSouth.

Order Types
The following order types are used in this document:

(1). T - The "to" portion of a change of address. This Order Type is used to connect main service at a new address when a customer moves from one address to another in any of the nine states within the BellSouth region. A "T" Order Type is always pared with an "F" Order Type which will have the same telephone number following the "F" Order Type Code unless the orders are within different states.

(2). N - Orders establishing a new account. Also, this Order Type Code is occasionally used when changing from one type of system to another such as when changing from PBX to Centrex.

(3). C - Order Type used for the following conditions: changes or partial connections or disconnections of service or equipment; change of telephone number, grade or class of main line, additional lines, auxiliary lines, PBX trunks and stations; addition of trunks or lines to existing accounts; move of equipment (other than change of address); temporary suspension and restoration of service at customer's request.

(4). R - Order Type used for the following conditions: additions, removals or changes in directory listings; responsibility change orders, addition, removal or changes in directory and billing information; other record corrections where no "field work" is involved.

OSPCM
Outside Plant Contract Management System - A system that provides scheduling and completion information on outside plant construction activities.

OSS
Operations Support System - A support system or database which is used to mechanize the flow or performance of work. The term is used to refer to the overall system consisting of hardware complex, computer operating system(s), and

application which is used to provide the support functions.

OUT OF SERVICE
Customer has no dial tone and cannot call out.

P Q

PMAP
Performance Measurement Analysis Platform

PON
Purchase Order Number

POTS
Plain Old Telephone Service

PREDICTOR
A system which is used to administer proactive maintenance and rehabilitation activities on outside plant facilities, provide access to selected work groups to Mechanized Loop Testing and switching system I/O ports.

Preordering
The process and functions by which vital information is obtained, verified, or validated prior to placing a service request.

PRI
Primary Rate ISDN

Provisioning
The process and functions by which necessary work is performed to activate a service requested via an LSR or ASR and to initiate the proper billing and accounting functions.

PSIMS
Product/Service Inventory Management System - A BellSouth database Operations System which contains availability information on switching system features and capabilities and on BellSouth service availability. This database is used to verify the availability of a feature or service in an NXX prior to making a commitment to the customer.

PSIMSORB
PSIMS software contract for feature/service.

R

RNS
Regional Negotiation System - An internal BellSouth service order entry system used by BellSouth Consumer Services to input service orders in BellSouth format.

ROS
Regional Ordering System

RRC
Residence Repair Center - The BellSouth Consumer Services trouble receipt center which serves residential customers.

RSAG
Regional Street Address Guide - The BellSouth database, which contains street addresses validated to be accurate with state and local governments.

RSAGADDR
RSAG software contract for address search.

RSAGTN
RSAG software contract for telephone number search.

S

SAC
Service Advocacy Center

SEEM
Self Effectuating Enforcement Mechanism

SOCS
Service Order Control System - A system which routes service order images among BellSouth drop points and BellSouth OSS during the service provisioning process.

SOIR
Service Order Interface Record - any change effecting activity to a customer account by service order that impacts 911/E911

SONGS
Service Order Negotiation and Generation System.

Syntactically Incorrect Query
A query that cannot be fulfilled due to insufficient or incorrect input data from the end user. For example, A CLEC would like to query the legacy system for the following address: 1234 Main ST. Entering "1234 Main ST" will be considered syntactically correct because valid characters were used in the address field. However, entering "AB34 Main ST" will be considered syntactically incorrect because invalid characters (i.e., alpha characters were entered in numeric slots) were used in the address field.

T

TAFI
Trouble Analysis Facilitation Interface - The BellSouth Operations System that supports trouble receipt center personnel in taking and handling customer trouble reports.

TAG
Telecommunications Access Gateway – TAG was designed to provide an electronic interface, or machine-to-machine interface for the bi-directional flow of information between BellSouth's OSSs and participating CLECs.

TN
Telephone Number

Total Manual Fallout
The number of LSRs which are entered electronically but require manual entering into a service order generator.

U V

UNE
Unbundled Network Element

UCL
Unbundled Copper Link

USOC
Universal Service Order Code

W X Y Z

WATS
Wide Area Telephone Service

WFA
Work Force Administration

WMC
Work Management Center

WTN
Working Telephone Number.

Appendix C: BellSouth Audit Policy

C-1: BellSouth's Internal Audit Policy

BellSouth's internal efforts to make certain that the reports produced by the PMAP platform are of the highest accuracy has been formalized into a Performance Measurements Quality Assurance Plan (PMQAP) that documents and augments existing quality assurance processes integral to the production and validation of Performance Measurements data.

The plan consists of three sections:

1. Change Control addresses the quality assurance steps involved in the introduction of new measurements and changes to existing measurements.
2. Production addresses the quality assurance steps used to create monthly SQM reports.
3. Monthly Validation addresses the quality assurance steps used to ensure accurate posting of monthly results.

The BellSouth PMQAP will ensure that BellSouth effectively and consistently provides accurate performance measurements data for the activities included in the SQM. The BellSouth Internal Audit department will audit this plan and its quality assurance steps annually, beginning in 4Q01.

C-2: BellSouth's External Audit Policy

BellSouth currently provides many CLECs with audit rights as a part of their individual interconnection agreements. BellSouth has developed a proposed Audit Plan for use by the parties to an audit. If requested by a Public Service Commission or by a CLEC exercising contractual audit rights, BellSouth will agree to undergo a comprehensive audit of the current year aggregate level reports for both BellSouth and the CLECs for each of the next five (5) years (2001 - 2005), to be conducted by an independent third party auditor jointly selected by BellSouth and the CLEC. The results of audits will be made available to all the parties subject to proper safeguards to protect proprietary information. Requested audits include the following specifications:

1. The cost shall be borne by BellSouth.
2. The independent third party auditor shall be selected with input from BellSouth, the PSC, if applicable, and the CLEC(s).
3. BellSouth, the PSC and the CLECs shall jointly determine the scope of the audit.

These comprehensive audits are intended to provide the basis for the PSCs and CLECs to determine that the SQM, PMAP and SEEM produce accurate data that reflects each States Order for performance measurements. Once this has been verified by an initial audit, the BellSouth PMQAP will provide the basis for future audits.

Appendix D: OSS Tables

OSS-1: Average Response Interval and Percent Within Interval (Pre-Ordering/Ordering)

Table 1: Legacy System Access Times For RNS

System	Contract	Data	< 2.3 sec.	> 6 sec.	<= 6.3 sec.	Avg. Sec.	# of Calls
RSAG	RSAG-TN	Address	x	x	x	x	x
RSAG	RSAG-ADDR	Address	x	x	x	x	x
ATLAS	ATLAS-TN	TN	x	x	x	x	x
DSAP	DSAP-DDI	Schedule	x	x	x	x	x
CRIS	CRSACCTS	CSR	x	x	x	x	x
OASIS	OASISBIG	Feature/Service	x	x	x	x	x

Table 2: Legacy System Access Times For R0S

System	Contract	Data	< 2.3 sec.	> 6 sec.	<= 6.3 sec.	Avg. sec.	# of Calls
RSAG	RSAG-TN	Address	x	x	x	x	x
RSAG	RSAG-ADDR	Address	x	x	x	x	x
ATLAS	ATLAS-TN	TN	x	x	x	x	x
DSAP	DSAP-DDI	Schedule	x	x	x	x	x
CRIS	CRSOCSR	CSR	x	x	x	x	x
OASIS	OASISBIG	Feature/Service	x	x	x	x	x

Table 3: Legacy System Access Times For LENS

System	Contract	Data	< 2.3 sec.	> 6 sec.	<= 6.3 sec.	Avg. sec.	# of Calls
RSAG	RSAG-TN	Address	x	x	x	x	x
RSAG	RSAG-ADDR	Address	x	x	x	x	x
ATLAS	ATLAS-TN	TN	x	x	x	x	x
DSAP	DSAP	Schedule	x	x	x	x	x
CRIS	CRSECSRL	CSR	x	x	x	x	x
COFFI	COFFI/USOC	Feature/Service	x	x	x	x	x
P/SIMS	PSIMS/ORB	Feature/Service	x	x	x	x	x

Table 4: Legacy System Access Times For TAG

System	Contract	Data	< 2.3 sec.	> 6 sec.	<= 6.3 sec.	Avg. sec.	# of Calls
RSAG	RSAG-TN	Address	x	x	x	x	x
RSAG	RSAG-ADDR	Address	x	x	x	x	x
ATLAS	ATLAS-TN	TN	x	x	x	x	x
ATLAS	ATLAS-MLH	TN	x	x	x	x	x
ATLAS	ATLAS-DID	TN	x	x	x	x	x
DSAP	DSAP-DDI	Schedule	x	x	x	x	x
CRIS	TAG-CSR	CSR	x	x	x	x	x
P/SIMS	PSIM/ORB	Feature/Service	x	x	x	x	x

OSS-1: Average Response Interval and Percent Within Interval (Pre-Ordering/Ordering)

SEEM OSS Legacy System

System	BellSouth	CLEC
Telephone Number/Address		
RSAG-ADDR	RNS, ROS	TAG, LENS
RSAG-TN	RNS, ROS	TAG, LENS
Atlas	RNS,ROS	TAG. LENS
Appointment Scheduling		
DSAP	RNS, ROS	TAG, LENS
CSR Data		
CRSACCTS	RNS	
CRSOCSR	ROS	
CRSECSRL		LENS
TAG-CSR		TAG
Service/Feature Availability		
OASISBIG	RNS, ROS	
PSIMS/ORB, COFFI		LENS, TAG

OSS-2: OSS Availability (Pre-Ordering/Ordering)

OSS Availability

OSS Interface	Applicable to	% Availability
EDI	CLEC	x
LENS	CLEC	x
LEO	CLEC	x
LESOG	CLEC	x
PSIMS	CLEC	x
TAG	CLEC	x
LNP Gateway	CLEC	x
COG	CLEC	x
SOG	CLEC	x

DOM	CLEC	x
DOE	CLEC/BellSouth	x
CRIS	CLEC/BellSouth	x
ATLAS/COFFI	CLEC/BellSouth	x
BOCRIS	CLEC/BellSouth	x
DSAP	CLEC/BellSouth	x
RSAG	CLEC/BellSouth	x
SOCS	CLEC/BellSouth	x
SONGS	CLEC/BellSouth	x
RNS	BellSouth	x
ROS	BellSouth	x

OSS-2: OSS Availability (Pre-Ordering/Ordering)

SEEM OSS Availability

OSS Interface	Applicable to	% Availability
EDI	CLEC	x
LENS	CLEC	x
LEO	CLEC	x
LESOG	CLEC	x
PSIMS	CLEC	x
TAG	CLEC	x
LNP Gateway	CLEC	x
COG	CLEC	x
SOG	CLEC	x
DOM	CLEC	x

OSS-3: OSS Availability (Maintenance & Repair)

OSS Availability (M&R)

OSS Interface	% Availability
BellSouth TAFI	x
CLEC TAFI	x
CLEC ECTA	x
BellSouth & CLEC	
CRIS	x
LMOS HOST	x
LNP Gateway	x
MARCH	x
OSPCM	x
PREDICTOR	x
SOCS	x

OSS-3: OSS Availability (Maintenance & Repair)

SEEM OSS Availability (M&R)

OSS Interface	% Availability
CLEC TAFI	x
CLEC ECTA	x

OSS-4: Response Interval (Maintenance & Repair)

Legacy System Access Times for M&R

System	BellSouth & CLEC	Count <= 4	> 4 <= 10	<= 10	> 10	> 30	Avg. Int.
CRIS	x	x	x	x	x	x	x
DLETH	x	x	x	x	x	x	x
DLR	x	x	x	x	x	x	x
LMOS	x	x	x	x	x	x	x
LMOSupd	x	x	x	x	x	x	x
LNP	x	x	x	x	x	x	x
MARCH	x	x	x	x	x	x	x
OSPCM	x	x	x	x	x	x	x
Predictor	x	x	x	x	x	x	x
SOCS	x	x	x	x	x	x	x
NIW	x	x	x	x	x	x	x

TAFI

System	Open Trouble Ticket	Status Trouble Ticket	Mechanized Line Testing	Close Trouble Ticket
CRIS	x			
DLETH	x			
DLR	x			
LMOS	x	x		x
LMOSSupd	x	x	x	x
LNP	x			
MARCH	x			
OSPCM	x	x		
Predictor	x	x		
SOCS	x	x		
NIW	x			

Note: Depending on the type of customer report multiple systems maybe touched in one transaction.

Product	PRODUCT TYPE	REQTYPE	ACT TYPE	F/T[3]	COMPLEX SERVICE	COMPLEX ORDER	PLANNED FALLOUT FOR MANUAL HANDLING[1]	EDI	TAG[2]	LENS[4]	COMMENTS
2 wire analog DID trunk port	U	F	N	No	UNE	Yes	NA	N	N	N	
2 wire analog port	U	F	N	No	UNE	No	Yes	Y	Y	Y	
2 wire ISDN digital line	U	A	N,T	No	UNE	Yes	NA	N	N	N	
2 wire ISDN digital loop	U	A	N,C,D	Yes	UNE	Yes	No	Y	Y	N	
2 wire ISDN digital loop - LNP	U	B	V,P,Q	Yes	UNE	Yes	No	Y	Y	N	
3 Way Calling	R,B	E,M	N,C,V,W,P,Q,T	Yes	No	No	No	Y	Y	Y	
3rd Party Call Block	R,B	E,M	N,C,V,W,D,P,Q,T	Yes	No	No	No	Y	Y	Y	
4 wire analog voice grade loop	U	A	T	No	UNE	Yes	Yes	Y	Y	N	
4 wire analog voice grade loop	U	A	N	Yes	UNE	Yes	No	Y	Y	N	
4 wire DS1 & PRI digital loop	U	A	N,T	No	UNE	Yes	NA	N	N	N	
4 wire DSO & PRI digital loop	U	A	N,T	No	UNE	Yes	NA	N	N	N	
4 wire ISDN DSI digital trunk ports	U	A	N,T	No	UNE	Yes	NA	N	N	N	
4-WIRE DS1 LOOP WITH CHANNELIZATION WITH PORT DS1	C	M	N,C,D,V	No	Yes	Yes	NA	N	N	N	
4-WIRE DS1 LOOP WITH CHANNELIZATION WITH PORT TRUNK SERVICE	C	M	N,C,D,V	No	Yes	Yes	NA	N	N	N	
900 Call Block	R,B	E,M	N,C,V,W,D,P,Q,T	Yes	No	No	No	Y	Y	Y	
Accupulse	C	E	N,C,T,V,W	No	Yes	Yes	NA	N	N	N	
ADSL	R,B,C	E	V,W,D	Yes	C/S	C/S	No	Y	Y	Y	NOTE THIS PRODUCT CAN BE ORDERED FOR RES/BUS AND CENTREX
Analog Data/Private Line	C	E	N,C,T,V,W,D	No	Yes	Yes	NA	N	N	N	
Area Plus	R,B	E,M	N,C,V,W,P,Q,T	Yes	No	No	No	Y	Y	Y	
ATM (ASYNCHRONOUS TRANFER MODE)	C	E	N,C,V,W,D	No	Yes	Yes	NA	N	N	N	
Basic Rate ISDN *Unbundled	U	A	T	No	Yes	Yes	Yes	Y	Y	N	
Basic Rate ISDN *Unbundled	U	A	N,V,D	Yes	UNE	Yes	No	Y	Y	Y	
Basic Rate ISDN *Unbundled	U	A	C,T	No	UNE	Yes	Yes	Y	Y	Y	
Basic Rate ISDN 2 Wire UNE P	C	M	N,C,D,V	No	Yes	Yes	NA	N	N	N	Manual
Basic Rate ISDN 2 Wire	C	E	N,C, D,T,V,P,Q	No	Yes	Yes	Yes	Y	Y	Y	

Product	PRODUCT TYPE	REQTYPE	ACT TYPE	F/T[3]	COMPLEX SERVICE	COMPLEX ORDER	PLANNED FALLOUT FOR MANUAL HANDLING[1]	EDI	TAG[2]	LENS[4]	COMMENTS
BELLSOUTH CHANNELIZED TRUNKS	C	E	N,C,D,T,V,W,P,Q	No	Yes	Yes	NA	N	N	N	
Call Block	R,B	E,M	N,C,V,W,P,Q,T	Yes	No	No	No	Y	Y	Y	
Call Forwarding	R,B	E,M	N,C,V,W,P,Q,T	Yes	No	No	No	Y	Y	Y	
Call Return	R,B	E,M	N,C,V,W,P,Q,T	Yes	No	No	No	Y	Y	Y	
Call Selector	R,B	E,M	N,C,V,W,P,Q,T	Yes	No	No	No	Y	Y	Y	
Call Tracing	R,B	E,M	N,C,V,W,P,Q,T	Yes	No	No	No	Y	Y	Y	
Call Waiting	R,B	E,M	N,C,V,W,P,Q,T	Yes	No	No	No	Y	Y	Y	
Call Waiting Deluxe	R,B	E,M	N,C,V,W,P,Q,T	Yes	No	No	No	Y	Y	Y	
Caller ID	R,B	E,M	N,C,V,W,P,Q,T	Yes	No	No	No	Y	Y	Y	
BELLSOUTH CENTREX*	C	P	N,C,D,W,T,S,B,L,V,P	No	Yes	Yes	NA	N	N	N	
UNE P CENTREX	C	M	N,C,D,V	No	Yes	Yes	NA	N	N	N	
Collect Call Block	R,B	E,M	N,C,V,W,D,P,Q,T	Yes	No	No	No	Y	Y	Y	
DID	C	N	N,C,D,V,W,T,P,Q	No	Yes	Yes	Yes	Y	Y	Y	
2-WIRE DIRECT INWARD DIAL (DID) TRUNK PORT AND VOICE GRADE LOOP COMBINATION	C	M	N,C,D,V	No	Yes	Yes	NA	N	N	N	
Digital Data Transport	U	E	N,C,T,V,W	No	UNE	Yes	NA	N	N	N	
DIGITAL DIRECT INTEGRATION TERMINATION SERVICES (DDITS) DS1	C	M	N,C,D,V	No	Yes	Yes	NA	N	N	N	
DIGITAL DIRECT INTEGRATION TERMINATION SERVICES (DDITS) TRUNK SERVICE	C	M	N,C,D,V	No	Yes	Yes	NA	N	N	N	
Directory Listing Indentions	B,U	B,C,E,F,J,M,N	N,C,T,R,V,W,P,Q	No	No	No	Yes	Y	Y	Y	
Directory Listings (simple)	R,B,U	B,C,E,F,J,M,N	N,C,R,V,W,P,Q	Yes	No	No	No	Y	Y	Y	
Directory Listings (simple)	R,B,U	B,C,E,F,J,M,N	T	No	No	No	Yes	Y	Y	N	
Directory Listings Captions	R,B,U	B,C,E,F,J,M,N	N,C,T,R,V,W,P,Q	No	No	Yes	Yes	Y	Y	Y	
DIFFERENT PREMISE ADDRESS (DPA)	C	E	N,C,D,V,W,T	No	Yes	Yes	NA	N	N	N	
DS1Loop	U	A	N,D,V	Yes	UNE	Yes	No	Y	Y	Y	
DS3	U	A	N,C,V	No	UNE	Yes	NA	N	N	N	
DSO Loop	U	A	N,D,V	Yes	UNE	Yes	No	Y	Y	Y	
DSO Loop	U	A	C,T	No	No	No	Yes	Y	Y	Y	
Enhanced Caller ID	R,B	E	C,D,N,V,W,P,Q,T	Yes	No	No	No	Y	Y	Y	

Product	PRODUCT TYPE	REQTYPE	ACT TYPE	F/T[3]	COMPLEX SERVICE	COMPLEX ORDER	PLANNED FALLOUT FOR MANUAL HANDLING[1]	EDI	TAG[2]	LENS[4]	COMMENTS
Enhanced Extended Links (EELS)	U	A	C,D,N,T,V	Yes	No	No	No	Y	Y	Y	
ESSX	C	P	C,D,T,V,S,B,W,L,P,Q	No	Yes	Yes	NA	N	N	N	
Flat Rate/Business	B	E, M	C,D,N,V,W,T Y,B,L,S,D,T,P,Q	Yes	No	No	No	Y	Y	Y	
Flat Rate/Residence	R	E, M	C,D,N,V,W,T Y,B,L,S,D,T,P,Q	Yes	No	No	No	Y	Y	Y	
FLEXSERV	C	E	N,C,D,T,V,W,P,Q	No	Yes	Yes	NA	N	N	N	
Frame Relay	C	E	N,C,D,V,W	No	Yes	Yes	NA	N	N	N	
FX/FCO	C	E	N,C,D,T,V,W,P,Q	No	Yes	Yes	NA	N	N	N	
UNE P FX/FCO (RES,BUS,PBX) (NOTE: THIS PRODUCT WILL NOT BE AVAILABLE UNTIL 08--01-02	C	M	N,C,V,D,T,S,B,L,W,Y,P,Q	No	Yes	Yes	NA	N	N	N	
Ga. Community Calling	R,B	M	C,D,N,V,W,P,Q	No	No	No	NA	N	N	N	
Ga. Community Calling	R,B	E	T	No	No	No	Yes	Y	Y	N	
HDSL	U	A	T	No	UNE	No	Yes	Y	Y	N	
HDSL	U	A	N,C,D,V	Yes	UNE	No	No	Y	Y	Y	
Hunting MLH	R,B	E, M	C,D,N,T,V,W	No	C/S[4]	C/S	Yes	Y	Y	N	
Hunting Series Completion	R,B	E, M	C,D,N,V,W	Yes	C/S	C/S	No	Y	Y	Y	
Hunting Series Completion	R,B	E, M	T	No	No	No	Yes	Y	Y	N	
INP to LNP Conversion	U	C	C	No	UNE	Yes	Yes	Y	Y	N	
LightGate	C	E	N,C,D,T,V,W,P,Q	No	Yes	Yes	NA	N	N	N	
Line Sharing	U	A	N,C,D,V,P,Q	Yes	UNE	No	No	Y	Y	Y	
Line Splitting	U	A	N,C,D	Yes	UNE	No	No	Y	Y	Y	
LNP With Complex Listing	U	C	P,V,Q	No	UNE	Yes	Yes	Y	Y	N	
LNP with Complex Services	U	C	P,V,Q	No	UNE	Yes	Yes	Y	Y	N	
LNP with Partial Migration	U	C	P,V,Q	No	UNE	Yes	Yes	Y	Y	N	
LNP	U	C	P,V,Q	Yes	UNE	Yes	No	Y	Y	N	
Local Number Portability (INP to LNP)	U	C	C	No	UNE	No	Yes	Y	Y	N	
INP	U	B,C	D	No	UNE	No	Yes	Y	Y	N	
Loop+LNP	U	B	V,P,Q	Yes	UNE	No	No	Y	Y	N	
Measured Rate/Bus	R,B	E,M	C,D,N,V,W,P,Q,T Y,B,L,S,D	Yes	No	No	No	Y	Y	Y	

Product	PRODUCT TYPE	REQTYPE	ACT TYPE	F/T[3]	COMPLEX SERVICE	COMPLEX ORDER	PLANNED FALLOUT FOR MANUAL HANDLING[1]	EDI	TAG[2]	LENS[4]	COMMENTS
Measured Rate/Res	R,B	E,M	C,D,N,V,W,P,Q,T Y,B,L,S,D	Yes	No	No	No	Y	Y	Y	
Megalink POINT TO POINT	C	E	N,V,W,T,D,C,P,Q	No	Yes	Yes	NA	N	N	N	
Megalink CHANNELIZED	C	E	N,V,W,T,D,C,P,Q	No	Yes	Yes	NA	N	N	N	
Memory Call	R,B	E, M	C,D,N,V,W,P,Q,T	Yes	No	No	No	Y	Y	Y	
Memory Call Ans. Svc.	R,B	E, M	C,D,N,V,W,P,Q,T	Yes	No	No	No	Y	Y	Y	
Multiserv	C	P	N,C,D,T,V,S,B,W,L,P,Q	No	Yes	Yes	NA	N	N	N	
Native Mode LAN Interconnection (NMLI)	C	E	N,C,D,V,W	No	Yes	Yes	NA	N	N	N	
Off-Prem Stations	C	E	N,C,D,V,W,T,P,Q	No	Yes	Yes	NA	N	N	N	
Optional Calling Plan	R,B	E, M	N,V,P,Q,W	Yes	No	No	No	Y	Y	Y	
Package/Complete Choice and Area Plus	R,B	E, M	N,C,V,W,P,Q	Yes	No	No	No	Y	Y	Y	
Package/Complete Choice and Area Plus	R,B	E, M	T	No	No	No	Yes	Y	Y	N	
Pathlink/ Primary Rate ISDN	C	E	N,C,D,T,V,W,P,Q	No	Yes	Yes	NA	N	N	N	
4-WIRE ISDN PRI UNE COMBO	C	M	N,C,D,V	No	Yes	Yes	NA	N	N	N	
Pay Phone Provider	B	E,M	C,D,T,N,V,W,P,Q	Yes	No	No	No	Y	Y	Y	
PBX Standalone Port	C	F	N,C,D	No	Yes	Yes	Yes	Y	Y	N	
PBX Trunks	C	E	N,C,D,V,W,T,P,Q	No	Yes	Yes	Yes	Y	Y	N	
PIC/LPIC Change	R,B,C	E,M	C,V,P,Q,T	Yes	No	No	No	Y	Y	Y	
PIC/LPIC Freeze	R,B,C	E,M	N,C,V,P,Q,T	Yes	No	No	No	Y	Y	Y	
PORT/LOOP COMBO 2-WIRE PBX	C	M	N,C,D,V	No	No	No	Yes	Y	Y	N	
Port/Loop Simple	U	M	N,C,D,V	Yes	No	No	No	Y	Y	Y	
Preferred Call Forward	R,B,U	E,M	C,D,N,V,W,P,Q,T	Yes	No	No	No	Y	Y	Y	
RCF Basic	R,B	E,M	N,D,W,V,P,Q,T	No	No	No	Yes	Y	Y	N	
Remote Access to CF	R,B	E,M	C,D,N,V,W,P,Q,T	No	No	No	NA	Y	Y	N	
Repeat Dialing	R,B	E,M	C,D,N,V,W,P,Q,T	Yes	No	No	No	Y	Y	Y	
Ringmaster	R,B	E,M	C,D,N,V,W,P,Q,T	Yes	No	No	No	Y	Y	Y	
Smartpath	R,B	E	C,D,T,N,V,W	No	Yes	Yes	NA	N	N	N	
SmartRING	C	E	N,D,C,V,W	No	Yes	Yes	NA	N	N	N	
Speed Calling	R,B	E,M	C,D,N,V,W,P,Q,T	Yes	No	No	No	Y	Y	Y	
Synchronet	C	E	N,D,C,V,W	No	Yes	Yes	Yes	Y	Y	N	
Three Way Call Block	R,B	E,M	C,D,N,V,W,P,Q,T	Yes	No	No	No	Y	Y	N	

Product	PRODUCT TYPE	REQTYPE	ACT TYPE	F/T[3]	COMPLEX SERVICE	COMPLEX ORDER	PLANNED FALLOUT FOR MANUAL HANDLING[1]	EDI	TAG[2]	LENS[4]	COMMENTS
Tie Lines	C	E	N,C,D,V,W,T,P,Q	No	Yes	Yes	NA	N	N	N	
TOLL FREE DIALING (TFD)	C	E	N,C,D,V,W	No	Yes	Yes	NA	N	N	N	
Touchtone	R,B	E	C,D,N,V,W,P,Q,T	Yes	No	No	No	Y	Y	Y	
Unbundled Loop-Analog 2W, SL1, SL2	U	A,B	D,N,V	Yes	UNE	No	No	Y	Y	Y	
Unbundled Loop-Analog 2W, SL1,SL2	U	A,B	C **	Yes	UNE	No	Yes	Y	Y	Y	
Unbundled Universal Digital Channel (UDC) Loop	U	A	N,D	Yes	UNE	No	No	Y	Y	Y	
WATS*	C	E	W,D,N,C,V	No	Yes	Yes	NA	N	N	N	
XDSL	U	A,B	N,C,V,D	Yes	UNE	No	No	Y	Y	Y	
XDSL	U	A,B	T	No	No	No	Yes	Y	Y	N	

Product: U-UNE; C-Complex; B-Business; R-Residence

Reqtype: A-Loop; B-Loop with LNP/INP; C-LNP/INP; E-Resale; F-Port; J-Directory Listing and Directory Assistance; M–UNE-P; N-DID Resale; P-Centrex Resale, ACT: N-New installation-; C-Change an existing account; D-Disconnection; T-Outside move of end user location; R-Record activity is for ordering administrative changes; V-Conversion of service to new LSP as specified; W-Conversion of service to new LSP "as is"; S-Suspend; B-Restore; Y-Deny; L-Seasonal Suspend; P-Partial Migration (initial); Q-Partial Migration (subsequent)

Note 1: Planned Fallout for Manual Handling denotes those services that are electronically submitted and are not intended to flow-through due to the complexity of the service.

Note 2: The TAG column includes thse LSRs submitted via Robo TAG.

Note 3: For all services that indicate 'No' for flow-through, the following reasons, in addition to complex services or complex order, also prompt manual handling: Expedites from CLECs, special pricing plans, partial migrations (although conversions-as-is flow through for issue 9 unless migrating the main TN and a new TN must be assigned), class of service invalid in certain states with some TOS e.g. government, or cannot be changed when changing main TN on C activity, pnding order review required (Example: Any pending service order (PSO) not related to current PON, pending service order (PSO) with multiple service orders pending realted to current PON and SUP received), more than 25 business lines and more than 15 loops, CSR inaccuracies such as invalid or missing CSR data in CRIS, Directory listings with Indentions or Captions, , transfer of calls option for CLEC end user – new TN not yet posted to CRIS.

Note 4: Services with C/S in the Complex Service and/or the Complex Order columns can be either complex or simple.

Note 5: The following list of items will not FT:

LSRs with Project or RPON fields populated

**SL1 REQTYP A, ACT C, LNA N, C, or D

**SL2 REQTYP A, ACT C, LNA C

REQTYP B, C, ACT P when migrating main telephone number

REQTYP B, C ACT V with Complex

REQTYP E, M, N and P; ACT = V, LNA = V (LNP to Resale/UNE Switched Combinations)

Attachment 10

BellSouth Disaster Recovery Plan

CONTENTS

PAGE

1.0	Purpose	2
2.0	Single Point of Contact	2
3.0	Identifying the Problem	2
3.1	Site Control	3
3.2	Environmental Concerns	4
4.0	The Emergency Control Center (ECC)	4
5.0	Recovery Procedures	5
5.1	CLEC Outage	5
5.2	BellSouth Outage	5
5.2.1	Loss of Central Office	6
5.2.2	Loss of a Central Office with Serving Wire Center Functions	6
5.2.3	Loss of a Central Office with Tandem Functions	6
5.2.4	Loss of a Facility Hub	7
5.3	Combined Outage (CLEC and BellSouth Equipment)	7
6.0	T1 Identification Procedures	7
7.0	Acronyms	8

1.0 PURPOSE

In the unlikely event of a disaster occurring that affects BellSouth's long-term ability to deliver traffic to a Competitive Local Exchange Carrier (CLEC), general procedures have been developed by BellSouth to hasten the recovery process in accordance with the Telecommunications Service Priority (TSP) Program established by the Federal Communications Commission to identify and prioritize telecommunication services that support national security or emergency preparedness (NS/EP) missions. Since each location is different and could be affected by an assortment of potential problems, a detailed recovery plan is impractical. However, in the process of reviewing recovery activities for specific locations, some basic procedures emerge that appear to be common in most cases.

These general procedures should apply to any disaster that affects the delivery of traffic for an extended time period. Each CLEC will be given the same consideration during an outage, and service will be restored as quickly as possible.

This document will cover the basic recovery procedures that would apply to every CLEC.

2.0 SINGLE POINT OF CONTACT

When a problem is experienced, regardless of the severity, the BellSouth Network Management Center (NMC) will observe traffic anomalies and begin monitoring the situation. Controls will be appropriately applied to insure the sanity of BellSouth's network; and, in the event that a switch or facility node is lost, the NMC will attempt to circumvent the failure using available reroutes.

BellSouth's NMC will remain in control of the restoration efforts until the problem has been identified as being a long-term outage. At that time, the NMC will contact BellSouth's Emergency Control Center (ECC) and relinquish control of the recovery efforts. Even though the ECC may take charge of the situation, the NMC will continue to monitor the circumstances and restore traffic as soon as damaged network elements are revitalized.

The telephone number for the BellSouth Network Management Center in Atlanta, as published in Telcordia's National Network Management Directory, is 404-321-2516.

3.0 IDENTIFYING THE PROBLEM

During the early stages of problem detection, the NMC will be able to tell which CLECs are affected by the catastrophe. Further analysis and/or first hand observation will determine if the disaster has affected CLEC equipment only, BellSouth equipment only or a combination. The initial restoration activity will be largely determined by the equipment that is affected.

Once the nature of the disaster is determined and after verifying the cause of the problem, the NMC will initiate reroutes and/or transfers that are jointly agreed upon by the affected CLECs' Network Management Center and the BellSouth NMC. The type and percentage of controls used will depend upon available network capacity. Controls necessary to stabilize the situation will be invoked and the NMC will attempt to re-establish as much traffic as possible.

For long-term outages, recovery efforts will be coordinated by the Emergency Control Center (ECC). Traffic controls will continue to be applied by the NMC until facilities are re-established. As equipment is made available for service, the ECC will instruct the NMC to begin removing the controls and allow traffic to resume.

3.1 SITE CONTROL

In the total loss of building use scenario, what likely exists will be a smoking pile of rubble. This rubble will contain many components that could be dangerous. It could also contain any personnel on the premises at the time of the disaster. For these reasons, the local fire marshal with the assistance of the police will control the site until the building is no longer a threat to surrounding properties and the companies have secured the site from the general public.

During this time, the majority owner of the building should be arranging for a demolition contractor to mobilize to the site with the primary objective of reaching the cable entrance facility for a damage assessment. The results of this assessment would then dictate immediate plans for restoration, both short term and permanent.

In a less catastrophic event, i.e., the building is still standing and the cable entrance facility is usable, the situation is more complex. The site will initially be controlled by local authorities until the threat to adjacent property has diminished. Once the site is returned to the control of the companies, the following events should occur.

An initial assessment of the main building infrastructure systems (mechanical, electrical, fire and life safety, elevators, and others) will establish building needs. Once these needs are determined, the majority owner should lead the building restoration efforts. There may be situations where the site will not be totally restored within the confines of the building. The companies must individually determine their needs and jointly assess the cost of permanent restoration to determine the overall plan of action.

Multiple restoration trailers from each company will result in the need for designated space and installation order. This layout and control is required to maximize the amount of restoration equipment that can be placed at the site, and the priority of placements.

Care must be taken in this planning to ensure other restoration efforts have logistical access to the building. Major components of telephone and building equipment will need to be removed and replaced. A priority for this equipment must also be jointly established to facilitate overall site restoration. (Example: If the AC switchgear has sustained damage, this would be of the highest priority in order to regain power, lighting, and HVAC throughout the building.)

If the site will not accommodate the required restoration equipment, the companies would then need to quickly arrange with local authorities for street closures, rights of way or other possible options available.

3.2 ENVIRONMENTAL CONCERNS

In the worse case scenario, many environmental concerns must be addressed. Along with the police and fire marshal, the state environmental protection department will be on site to monitor the situation.

Items to be concerned with in a large central office building could include:

1. Emergency engine fuel supply. Damage to the standby equipment and the fuel handling equipment could have created "spill" conditions that have to be handled within state and federal regulations.

2. Asbestos-containing materials that may be spread throughout the wreckage. Asbestos could be in many components of building, electrical, mechanical, outside plant distribution, and telephone systems.

3. Lead and acid. These materials could be present in potentially large quantities depending upon the extent of damage to the power room.

4. Mercury and other regulated compounds resident in telephone equipment.

5. Other compounds produced by the fire or heat.

Once a total loss event occurs at a large site, local authorities will control immediate clean up (water placed on the wreckage by the fire department) and site access.

At some point, the companies will become involved with local authorities in the overall planning associated with site clean up and restoration. Depending on the clean up approach taken, delays in the restoration of several hours to several days may occur.

In a less severe disaster, items listed above are more defined and can be addressed individually depending on the damage.

In each case, the majority owner should coordinate building and environmental restoration as well as maintain proper planning and site control.

4.0 THE EMERGENCY CONTROL CENTER (ECC)

The ECC is located in the Midtown 1 Building in Atlanta, Georgia. During an emergency, the ECC staff will convene a group of pre-selected experts to inventory the damage and initiate corrective actions. These experts have regional access to BellSouth's personnel and equipment and will assume control of the restoration activity anywhere in the nine-state area.

In the past, the ECC has been involved with restoration activities resulting from hurricanes, ice storms and floods. They have demonstrated their capabilities during these calamities as well as

during outages caused by human error or equipment failures. This group has an excellent record of restoring service as quickly as possible.

During a major disaster, the ECC may move emergency equipment to the affected location, direct recovery efforts of local personnel and coordinate service restoration activities with the CLECs. The ECC will attempt to restore service as quickly as possible using whatever means is available, leaving permanent solutions, such as the replacement of damaged buildings or equipment, for local personnel to administer.

Part of the ECC's responsibility, after temporary equipment is in place, is to support the NMC efforts to return service to the CLECs. Once service has been restored, the ECC will return control of the network to normal operational organizations. Any long-term changes required after service is restored will be made in an orderly fashion and will be conducted as normal activity.

5.0 RECOVERY PROCEDURES

The nature and severity of any disaster will influence the recovery procedures. One crucial factor in determining how BellSouth will proceed with restoration is whether or not BellSouth's equipment is incapacitated. Regardless of whose equipment is out of service, BellSouth will move as quickly as possible to aid with service recovery; however, the approach that will be taken may differ depending upon the location of the problem.

5.1 CLEC OUTAGE

For a problem limited to one CLEC (or a building with multiple CLECs), BellSouth has several options available for restoring service quickly. For those CLECs that have agreements with other CLECs, BellSouth can immediately start directing traffic to a provisional CLEC for completion. This alternative is dependent upon BellSouth having concurrence from the affected CLECs.

Whether or not the affected CLECs have requested a traffic transfer to another CLEC will not impact BellSouth's resolve to re-establish traffic to the original destination as quickly as possible.

5.2 BELLSOUTH OUTAGE

Because BellSouth's equipment has varying degrees of impact on the service provided to the CLECs, restoring service from damaged BellSouth equipment is different. The outage will probably impact a number of Carriers simultaneously. However, the ECC will be able to initiate immediate actions to correct the problem.

A disaster involving any of BellSouth's equipment locations could impact the CLECs, some more than others. A disaster at a Central Office (CO) would only impact the delivery of traffic to and from that one location, but the incident could affect many Carriers. If the Central Office is a Serving Wire Center (SWC), then traffic from the entire area to those Carriers served from that switch would also be impacted. If the switch functions as an Access Tandem, or there is a tandem in the building, traffic from every CO to every CLEC could be interrupted. A disaster that destroys a facility hub could disrupt various traffic flows, even though the switching equipment may be unaffected.

The NMC would be the first group to observe a problem involving BellSouth's equipment. Shortly after a disaster, the NMC will begin applying controls and finding re-routes for the

completion of as much traffic as possible. These reroutes may involve delivering traffic to alternate Carriers upon receiving approval from the CLECs involved. In some cases, changes in translations will be required. If the outage is caused by the destruction of equipment, then the ECC will assume control of the restoration.

5.2.1 Loss of a Central Office

When BellSouth loses a Central Office, the ECC will

a) Place specialists and emergency equipment on notice;

b) Inventory the damage to determine what equipment and/or functions are lost;

c) Move containerized emergency equipment and facility equipment to the stricken area, if necessary;

d) Begin reconnecting service on a parity basis for Hospitals, Police and other emergency agencies or End Users served by BellSouth or CLEC in accordance with the TSP priority restoration coding scheme entered in the BellSouth Maintenance database immediately prior to the emergency.

5.2.2 Loss of a Central Office with Serving Wire Center Functions

The loss of a Central Office that also serves as a Serving Wire Center (SWC) will be restored as described in Section 5.2.1.

5.2.3 Loss of a Central Office with Tandem Functions

When BellSouth loses a Central Office building that serves as an Access Tandem and as a SWC, the ECC will

a) Place specialists and emergency equipment on notice;

b) Inventory the damage to determine what equipment and/or functions are lost;

c) Move containerized emergency equipment and facility equipment to the stricken area, if necessary;

d) Begin reconnecting service on a parity basis for Hospitals, Police and other emergency agencies or End Users served by BellSouth or CLEC in accordance with the TSP priority restoration coding scheme entered in the BellSouth Maintenance database immediately prior to the emergency;

e) Re-direct as much traffic as possible to the alternate access tandem (if available) for delivery to those CLECs utilizing a different location as a SWC;

f) Begin aggregating traffic to a location near the damaged building. From this location, begin re-establishing trunk groups to the CLECs for the delivery of traffic normally found on the direct trunk groups. (This aggregation point may be the alternate access tandem location or another CO on a primary facility route.)

5.2.4 Loss of a Facility Hub

In the event that BellSouth loses a facility hub, the recovery process is much the same as above. Once the NMC has observed the problem and administered the appropriate controls, the ECC will assume authority for the repairs. The recovery effort will include

a) Placing specialists and emergency equipment on notice;

b) Inventorying the damage to determine what equipment and/or functions are lost;

c) Moving containerized emergency equipment to the stricken area, if necessary;

d) Reconnecting service on a parity basis for Hospitals, Police and other emergency agencies or End Users served by BellSouth or CLEC in accordance with the TSP priority restoration coding scheme entered in the BellSouth Maintenance database immediately prior to the emergency; and

e) If necessary, BellSouth will aggregate the traffic at another location and build temporary facilities. This alternative would be viable for a location that is destroyed and building repairs are required.

5.3 COMBINED OUTAGE (CLEC AND BELLSOUTH EQUIPMENT)

In some instances, a disaster may impact BellSouth's equipment as well as the CLECs'. This situation will be handled in much the same way as described in Section 5.2.3. Since BellSouth and the CLECs will be utilizing temporary equipment, close coordination will be required.

6.0 T1 IDENTIFICATION PROCEDURES

During the restoration of service after a disaster, BellSouth may be forced to aggregate traffic for delivery to a CLEC. During this process, T1 traffic may be consolidated onto DS3s and may become unidentifiable to the Carrier. Because resources will be limited, BellSouth may be forced to "package" this traffic entirely differently than normally received by the CLECs. Therefore, a method for identifying the T1 traffic on the DS3s and providing the information to the Carriers is required.

7.0 ACRONYMS

CLEC	-	Competitive Local Exchange Carrier
CO	-	Central Office (BellSouth)
DS3	-	Facility that carries 28 T1s (672 circuits)
ECC	-	Emergency Control Center (BellSouth)
NMC	-	Network Management Center
SWC	-	Serving Wire Center (BellSouth switch)
T1	-	Facility that carries 24 circuits
TSP	-	Telecommunications Service Priority

Hurricane Information

During a hurricane, BellSouth will make every effort to keep CLECs updated on the status of our network. Information centers will be set up throughout BellSouth Telecommunications. These centers are not intended to be used for escalations, but rather to keep the CLEC informed of network related issues, area damages and dispatch conditions, etc.

Hurricane-related information can also be found on line at http://www.interconnection.bellsouth.com/network/disaster/dis_resp.htm. Information concerning Mechanized Disaster Reports can also be found at this website by clicking on CURRENT MDR REPORTS or by going directly to http://www.interconnection.bellsouth.com/network/disaster/mdrs.htm.

BST Disaster Management Plan

BellSouth maintenance centers have geographical and redundant communication capabilities. In the event of a disaster removing any maintenance center from service another geographical center would assume maintenance responsibilities. The contact numbers will not change and the transfer will be transparent to the CLEC.

Attachment 11

Bona Fide Request and New Business Request Process

BONA FIDE REQUEST AND NEW BUSINESS REQUEST PROCESS

1.0 The Parties agree that BLC Management is entitled to order any Unbundled Network Element, Interconnection option, service option or Resale Service required to be made available by FCC or Commission requirements pursuant to the Communications Act of 1934, as modified by the Telecommunications Act of 1996 (the "Act"). BLC Management also shall be permitted to request the development of new or revised facilities or service options which are not required by the Act. Procedures applicable to requesting the addition of such facilities or service options are specified in this Attachment 11.

2.0 BONA FIDE REQUEST

2.1 A Bona Fide Request (BFR) is to be used when BLC Management makes a request of BellSouth to provide a new or modified Unbundled Network Element, Interconnection option, or other service option (Requested Services) pursuant to the Act that was not previously included in this Agreement.

2.2 A BFR shall be submitted in writing by BLC Management and shall specifically identify the requested service date, technical requirements, space requirements and/or such other specifications that clearly define the request such that BellSouth has sufficient information to analyze and prepare a response. Such a request shall also include BLC Management's designation of the request as being pursuant to the Telecommunications Act of 1996 (i.e. a BFR). The request shall be sent to BLC Management's designated BellSouth Sales contact.

2.3 If BellSouth determines that the preliminary analysis of the requested BFR is of such complexity that it will cause BellSouth to expend inordinate resources to evaluate the BFR, BellSouth shall notify BLC Management within ten (10) business days of BellSouth's receipt of BFR that a fee will be required prior to the evaluation of the BFR. BLC Management shall submit such fee within thirty (30) business days of BellSouth's notice that a fee is required. Within thirty (30) business days of BellSouth's receipt of the fee, BellSouth shall respond to BLC Management by providing a preliminary analysis of such Requested Services that are the subject of the BFR. The preliminary analysis shall either confirm that BellSouth will offer access to the Requested Services or confirm that BellSouth will not offer the Requested Services. If the preliminary analysis states that BellSouth will not offer the Requested Services, BellSouth will provide an

explanation of why the request is not technically feasible, does not qualify as a BFR for the Requested Services or is otherwise not required to be provided under the Act. If preliminary analysis of the requested BFR is not of such complexity that it will cause BellSouth to expend inordinate resources to evaluate the BFR, within thirty (30) business days of its receipt of the BFR, BellSouth shall respond to BLC Management by providing a preliminary analysis of such Requested Services that are the subject of the BFR. The preliminary analysis shall either confirm that BellSouth will offer access to the Requested Services or confirm that BellSouth will not offer the Requested Services. If the preliminary analysis states that BellSouth will not offer the Requested Services, BellSouth will provide an explanation of why the request is not technically feasible, does not qualify as a BFR for the Requested Services or is otherwise not required to be provided under the Act.

2.4 BLC Management may cancel a BFR at any time. If BLC Management cancels the request more than ten (10) business days after submitting the BFR request, BLC Management shall pay BellSouth's reasonable and demonstrable costs of processing and/or implementing the BFR up to the date of cancellation in addition to any fee submitted in accordance with Section 2.3 above.

2.5 BLC Management will have thirty (30) business days from receipt of preliminary analysis to accept the preliminary analysis or cancel the BFR as set forth in Section 2.4. Acceptance of the preliminary analysis must be in writing and accompanied by all nonrecurring charges quoted in the preliminary analysis. The nonrecurring charges as stated in the preliminary analysis cover the initial work required to develop the project plan, create the design parameters, and establish all activities and resources required to complete the BFR (Development Costs). Development costs are non-refundable. If BLC Management fails to respond within this 30-day period, the BFR will be deemed cancelled.

2.5.1 BellSouth shall propose a firm price quote and a detailed implementation plan within thirty (30) business days of receipt of BLC Management's acceptance of the preliminary analysis.

2.5.2 BLC Management shall have thirty (30) business days from receipt of firm price quote to accept or deny the firm price quote and submit any additional nonrecurring, non-refundable fees quoted in the firm price quote.

2.6 Unless BLC Management agrees otherwise, all prices shall be consistent with the pricing principles of the Act, FCC and/or the Commission.

2.7 If BLC Management believes that BellSouth's firm price quote is not consistent with the requirements of the Act, or if either Party believes that the other is not acting in good faith in requesting, negotiating or processing the BFR, either Party may seek FCC or Commission arbitration, as appropriate, to resolve the dispute. Any such arbitration applicable to Unbundled Network Elements and/or Interconnection shall be conducted in accordance with standards prescribed in Section 252 of the Act.

2.8 Upon agreement to the rates, terms and conditions of a BFR, an amendment to this Agreement may be required.

3.0 NEW BUSINESS REQUEST

3.1 A New Business Request (NBR) is to be used by BLC Management to make a request of BellSouth for a new or modified feature or capability of an existing product or service, a new product or service that is not deployed within the BellSouth network or operations and business support systems, or a new or modified service option that was not previously included in this Agreement (Requested Enhanced Services).

3.2 An NBR shall be submitted in writing by BLC Management and shall specifically identify the requested service date, technical requirements, space requirements and/or such specifications that clearly define the request such that BellSouth has sufficient information to analyze and prepare a response. The request shall be sent to BLC Management's designated BellSouth Sales contact.

3.3 If BellSouth determines that the preliminary analysis of the requested NBR is of such complexity that it will cause BellSouth to expend inordinate resources to evaluate the NBR, BellSouth shall notify BLC Management that a fee will be required prior to the evaluation of the NBR. BLC Management shall submit such fee within ten (10) business days of BellSouth's notice that a fee is required. BellSouth shall use reasonable efforts to respond to the NBR within (30) business days following BellSouth's receipt of the fee by providing a preliminary analysis of such Requested Enhanced Services that are the subject of the NBR. The preliminary analysis shall either confirm that BellSouth will offer access to the Requested Enhanced Services or confirm that BellSouth will not offer the Requested Enhanced Services. If the preliminary analysis states that BellSouth will not offer the Requested Services, BellSouth will provide an explanation of why the request is not technically feasible, does not qualify as an NBR for the Requested Services or is otherwise not required to be provided under the Act. If preliminary analysis of the requested NBR is not of such complexity that it will cause BellSouth to

expend inordinate resources to evaluate the NBR, BellSouth will use reasonable efforts to respond to BLC Management within thirty (30) business days of its receipt of an NBR by providing a preliminary analysis of such Requested Services that are the subject of the NBR. The preliminary analysis shall either confirm that BellSouth will offer access to the Requested Enhanced Services or confirm that BellSouth will not offer the Requested Enhanced Services. If the preliminary analysis states that BellSouth will not offer the Requested Services, BellSouth will provide an explanation of why the request is not technically feasible, does not qualify as an NBR for the Requested Services or is otherwise not required to be provided under the Act.

3.4 BLC Management may cancel an NBR at any time. If BLC Management cancels the request more than ten (10) business days after submitting it, BLC Management shall pay BellSouth's reasonable and demonstrable costs of processing and/or implementing the NBR up to the date of cancellation in addition to any fee submitted in accordance with Section 3.3 above.

3.5 BLC Management will have thirty (30) business days from receipt of preliminary analysis to accept the preliminary analysis or cancel the NBR as set forth in section 3.4. Acceptance of the preliminary analysis must be in writing and accompanied by all nonrecurring charges quoted in the preliminary analysis. The nonrecurring charges as stated in the preliminary analysis cover the initial work required to develop the project plan, create the design parameters, and establish all activities and resources required to complete the NBR. If BLC Management fails to respond within this 30-day period, the NBR will be deemed cancelled.

3.6 If BLC Management accepts the preliminary analysis, BellSouth shall propose a firm price quote and a detailed implementation plan within sixty (60) business days of receipt of BLC Management's acceptance of the preliminary analysis and nonrecurring fees quoted in the preliminary analysis.

3.7 BLC Management shall have thirty (30) business days from receipt of the firm price quote to accept or deny the firm price quote and submit any additional nonrecurring, non-refundable fees quoted in the firm price quote.

3.8 Upon agreement to the terms of a NBR, an amendment to this Agreement, or a separate agreement, may be required.

AMENDMENT TO
INTERCONNECTION AGREEMENT UNDER SECTIONS 251 AND 252 OF THE TELECOMMUNICATIONS ACT OF 1996
BETWEEN
BELLSOUTH TELECOMMUNICATIONS, INC.
d/b/a AT&T ALABAMA, AT&T FLORIDA, AT&T GEORGIA, AT&T KENTUCKY, AT&T LOUISIANA, AT&T MISSISSIPPI, AT&T NORTH CAROLINA, AT&T SOUTH CAROLINA AND AT&T TENNESSEE
AND
BLC MANAGEMENT LLC DBA ANGLES COMMUNICATION SOLUTIONS

The Interconnection Agreement dated February 29, 2004 by and between BellSouth Telecommunications, Inc. d/b/a AT&T Alabama, AT&T Florida, AT&T Georgia, AT&T Kentucky, AT&T Louisiana, AT&T Mississippi, AT&T North Carolina, AT&T South Carolina and AT&T Tennessee ("AT&T") and BLC Management LLC dba Angles Communication Solutions ("BLC Management") ("Agreement") effective in the state(s) of Alabama, Florida, Georgia, Kentucky, Louisiana, Mississippi, North Carolina, South Carolina and Tennessee is hereby amended as follows:

1. Section 2.1 of the General Terms and Conditions is amended by adding the following section:

   2.1.1 Notwithstanding anything to the contrary in this section 2.1, the original expiration date of this Agreement, as modified by this Amendment, will be extended for a period of three (3) years, from February 28, 2007 until February 28, 2010 (the "Extended Expiration Date"). The Agreement shall expire on the Extended Expiration Date; provided, however, that during the period from the effective date of this Amendment until the Extended Expiration Date, the Agreement may be terminated earlier either by written notice from BLC Management, by AT&T pursuant to the Agreement's early termination provisions, or by mutual agreement of the parties.

2. The Agreement is also amended as follows to reflect prior changes of law, and (ii) BLC Management acknowledges and agrees that it will promptly amend the Agreement to reflect future changes of law as and when they may arise.

3. The Parties hereby agree to delete and replace in its entirety the rates, terms and conditions set forth in Attachment 2.

4. EXCEPT AS MODIFIED HEREIN, ALL OTHER TERMS AND CONDITIONS OF THE UNDERLYING AGREEMENT SHALL REMAIN UNCHANGED AND IN FULL FORCE AND EFFECT.

5. In entering into this Amendment neither Party waives, and each Party expressly reserves, any rights, remedies or arguments it may have at law or under the intervening law or regulatory change provisions in the underlying Agreement (including intervening law rights asserted by either Party via written notice predating this Amendment) with respect to any orders, decisions, legislation or proceedings and any remands thereof, which the Parties have not yet fully incorporated into this Agreement or which may be the subject of further review.

6. This Amendment shall be filed with and is subject to approval by the Commission and shall become effective thirty (30) days after the last signature executing the Amendment.

IN WITNESS WHEREOF, the Parties have executed this Agreement the day and year written below.

BLC Management LLC dba Angles Communication Solutions

By: Brian Cox

Name: BRIAN COX
(Print or Type)

Title: CEO
(Print or Type)

Date: 10/08/07

BellSouth Telecommunications, Inc. d/b/a AT&T Alabama, AT&T Florida, AT&T Georgia, AT&T Kentucky, AT&T Louisiana, AT&T Mississippi, AT&T North Carolina, AT&T South Carolina and AT&T Tennessee

By: Kristen E. Shore

Name: Kristen E. Shore

Title: Director

Date: 10/11/07

FACILITIES-BASED OCN # 038D

ACNA _____

Version: 10/08/07

Attachment 2

Network Elements and Other Services

TABLE OF CONTENTS

1 Introduction **3**

2 Loops **11**

3 Line Splitting **33**

4 Unbundled Network Element Combinations **36**

5 Dedicated Transport and Dark Fiber Transport **40**

6 Automatic Location Identification/Data Management System (ALI/DMS) **47**

7 White Pages Listings **50**

Rates ..... **Exhibit A**

Rates ..... **Exhibit B**

ACCESS TO NETWORK ELEMENTS AND OTHER SERVICES

1 Introduction

1.1 Except as set forth in Exhibit 1 hereto, this Attachment sets forth rates, terms and conditions for unbundled network elements (Network Elements) and combinations of Network Elements (Combinations) that AT&T offers to BLC Management for BLC Management's provision of Telecommunications Services in accordance with its obligations under Section 251(c)(3) of the Act. Additionally, this Attachment sets forth the rates, terms and conditions for other facilities and services AT&T makes available to BLC Management (Other Services). Additionally, the provision of a particular Network Element or Other Service may require BLC Management to purchase other Network Elements or services. In the event of a conflict between this Attachment and any other section or provision of this Agreement, the provisions of this Attachment shall control.

1.2 The rates for Network Elements, Combinations and Other Services are set forth in Exhibits A and B. If no rate is identified in this Agreement, the rate will be as set forth in the applicable AT&T tariff or as negotiated by the Parties upon request by either Party. If BLC Management purchases service(s) from a tariff, all terms and conditions and rates as set forth in such tariff shall apply. A one-month minimum billing period shall apply to all Network Elements, Combinations and Other Services.

1.3 In some cases, Commissions have ordered AT&T to separate its disconnect costs and its installation costs into two separate nonrecurring charges. Accordingly, unless otherwise noted in this Agreement, the Commission ordered disconnect charges will be applied at the time the disconnect activity is performed by AT&T, regardless of whether or not a disconnect order is issued by BLC Management. Disconnect charges are set forth in the rate exhibit of this Attachment. BLC Management may purchase and use Network Elements and Other Services from AT&T in accordance with 47 C.F.R § 51.309.

1.4 The Parties shall comply with the requirements as set forth in the technical references within this Attachment 2.

1.5 BLC Management shall not obtain a Network Element for the exclusive provision of mobile wireless services or interexchange services.

1.6 <u>Conversion of Wholesale Services to Network Elements or Network Elements to Wholesale Services.</u> Upon request, AT&T shall convert a wholesale service, or group of wholesale services, to the equivalent Network Element or Combination that is available to BLC Management pursuant to Section 251 of the Act and under this Agreement or convert a Network Element or Combination that is available to BLC Management pursuant to Section 251 of the Act and under this Agreement to

an equivalent wholesale service or group of wholesale services offered by AT&T (collectively "Conversion"). AT&T shall charge the applicable nonrecurring switch-as-is rates for Conversions to specific Network Elements or Combinations found in Exhibit A. AT&T shall also charge the same nonrecurring switch-as-is rates when converting from Network Elements or Combinations. Any rate change resulting from the Conversion will be effective as of the next billing cycle following AT&T's receipt of a complete and accurate Conversion request from BLC Management. A Conversion shall be considered termination for purposes of any volume and/or term commitments and/or grandfathered status between BLC Management and AT&T. Any change from a wholesale service/group of wholesale services to a Network Element/Combination, or from a Network Element/Combination to a wholesale service/group of wholesale services, that requires a physical rearrangement will not be considered to be a Conversion for purposes of this Agreement. AT&T will not require physical rearrangements if the Conversion can be completed through record changes only. Orders for Conversions will be handled in accordance with the guidelines set forth in the Ordering Guidelines and Processes and CLEC Information Packages as referenced in Sections 1.13.1 and 1.13.2 below.

1.7 Except to the extent expressly provided otherwise in this Attachment, in all states, BLC Management may not maintain unbundled network elements or combinations of unbundled network elements, that are no longer offered pursuant to this Agreement (collectively "Arrangements"). In the event AT&T determines that BLC Management has in place any Arrangements after the Effective Date of this Agreement, AT&T will identify such Arrangements and provide BLC Management with thirty (30) days written notice to disconnect or convert such Arrangements. For orders submitted by BLC Management within such thirty (30) day period, AT&T will charge the applicable switch-as-is charge set forth in Exhibit A. If BLC Management fails to submit orders to disconnect or convert such Arrangements within such thirty (30) day period, AT&T will transition such circuits to the equivalent tariffed AT&T service(s), and shall charge BLC Management all applicable disconnect charges as set forth in this Agreement and the full nonrecurring charges for installation of the equivalent tariffed AT&T service as set forth in AT&T's tariffs. For all transitions pursuant to this Section 1.7 that require a physical rearrangement, AT&T shall charge any applicable nonrecurring installation charges. To the extent no tariff equivalent service exists, AT&T shall disconnect such facility or Arrangement. The applicable recurring tariff charge shall apply to each circuit as of the Effective Date of this Agreement.

1.7.1 In addition to the foregoing, for the state of Florida, the applicable recurring tariff charges shall apply to each circuit beginning the day following the thirty (30) day notice period.

1.7.2 Notwithstanding the foregoing, for the state of Georgia, those circuits for which BLC Management failed to submit a disconnect or conversion order within such thirty (30) day period and are subsequently transitioned by AT&T pursuant to this Section 1.7.2 shall be subject to the applicable switch-as-is charges set forth in Exhibit A. If an equivalent service is set forth in Exhibit 1, AT&T shall transition to such service. Otherwise, AT&T shall transition to the equivalent tariff service. To the extent no tariff equivalent service exists and no equivalent service is set forth in Exhibit 1, AT&T shall disconnect such facility or Arrangement. The applicable recurring 271 rate, resale or tariffed charge shall apply to each circuit as of March 11, 2006.

1.7.3 Notwithstanding the foregoing, for the state of North Carolina, those circuits for which BLC Management failed to submit a disconnect or conversion order within such thirty (30) day period and are subsequently transitioned by AT&T pursuant to this Section 1.7.3 shall be subject to applicable switch-as-is charges.

1.7.4 Notwithstanding the foregoing, for the state of Alabama, the written notice provided by AT&T, as described in Section 1.7, must identify by circuit identification number the specific Arrangements to be converted or disconnected. If BLC Management fails to dispute AT&T's identified Arrangements or fails to submit orders to disconnect or convert such Arrangements within the established thirty (30) day period, AT&T will transition such circuits to the equivalent tariffed AT&T service(s) subject to the Commission-established switch-as-is rate. The full nonrecurring charges for installation of the equivalent tariffed AT&T service as set forth in AT&T's tariffs will not apply to such conversions. However, the applicable recurring tariff charges shall apply to each circuit upon conversion.

1.7.5 Notwithstanding the foregoing, for the state of Louisiana, AT&T will provide BLC Management with written notice identifying the specific Arrangements which must be converted or disconnected. BLC Management shall have thirty (30) days from the date of the notice to submit orders to disconnect or convert the Arrangements. Those circuits to be converted to other AT&T services shall be subject to nonrecurring charges associated with that conversion. If BLC Management disputes AT&T's identification of Arrangements to be disconnected or converted, BLC Management shall send written notice of its dispute within thirty (30) days of AT&T's notice. AT&T shall not disconnect the disputed Arrangements while the dispute is being resolved. If the Parties are unable to reach a voluntary resolution of the dispute, they may petition the Commission for assistance. If BLC Management does not dispute AT&T's identification of Arrangements and fails to submit orders to disconnect or convert such Arrangements within the established thirty (30) day period, AT&T will transition such circuits to the equivalent tariffed AT&T services subject to the full nonrecurring charges for installation of the equivalent tariffed AT&T services as

set forth in AT&T's tariffs. The applicable recurring tariff charges shall apply to each circuit upon conversion.

1.8 AT&T's Master List of Unimpaired Wire Centers as Approved by State Commissions in its Region (Master List of Unimpaired Wire Centers), located on the AT&T Interconnection Web site designates those wire centers that, in accordance with state Commission orders, met the FCC's established criteria for non-impairment, as of March 11, 2005, where certain high capacity (DS1 and above) Loops and high capacity Dedicated Transport are no longer available as Network Elements. AT&T's List of Unimpaired Wire Centers in Kentucky and Tennessee (AT&T's List of Unimpaired Wire Centers), also located on the AT&T Interconnection Web site, are those wire centers that AT&T proposed met the FCC's established criteria for non-impairment as of March 11, 2005 but have not yet been approved by these respective Commissions. The Master List of Unimpaired Wire Centers and AT&T's List of Unimpaired Wire Centers shall be subject to modification and/or the addition of wire centers without amendment to this Agreement upon subsequent orders from state Commissions in the respective generic dockets establishing the wire centers that as of March 11, 2005, were unimpaired. Notification of such modification, addition or deletion of wire centers shall be made via AT&T's Carrier Notification process on AT&T's Interconnection Web site. Upon the Effective Date of this Agreement, BLC Management may not place any new orders for high capacity Dedicated Transport or high capacity Loops, as applicable, in those wire centers listed on the Master List of Unimpaired Wire Centers. In those wire centers set forth on AT&T's List of Unimpaired Wire Centers, BLC Management may place new orders for high capacity Loops and high capacity Dedicated Transport pursuant to Section 1.8.1 (self-certification) until such wire centers are approved by the Commissions. To the extent BLC Management placed orders after March 10, 2005 for high capacity Loops or high capacity Dedicated Transport in wire centers designated on the Master List of Unimpaired Wire Centers, as amended as specified above, within thirty (30) days after the Effective Date of this Agreement, or in the case of additions to the Master List of Unimpaired Wire Centers, within thirty (30) days after the notice of such addition, BLC Management shall submit an LSR(s) or spreadsheet(s), as applicable, identifying those non-compliant circuits to be disconnected or converted to the equivalent AT&T tariffed service or, in the state of Georgia, to the equivalent 271 service set forth in Exhibit 1. AT&T shall bill BLC Management the difference between the UNE recurring rates for such circuits pursuant to this Agreement and the applicable recurring charges for the equivalent AT&T tariffed service or 271 service in the state of Georgia from the date UNE circuit was installed in the unimpaired wire center to the date the circuit is disconnected or transitioned to the equivalent AT&T tariffed service. If BLC Management fails to submit an LSR or spreadsheet identifying such de-listed circuits within thirty (30) days as set forth above, AT&T will identify such circuits and convert them to the equivalent AT&T tariffed service, and charge BLC

Management applicable disconnect charges for the UNE circuit and the difference between the UNE recurring rate billed for such circuit and the full non-recurring and recurring charges for the tariffed service from the date the UNE circuit was installed in the unimpaired wire center to the date the circuit is transitioned to the equivalent AT&T tariffed service. To the extent there is no equivalent AT&T tariffed service for the de-listed UNE circuit, AT&T will disconnect the circuit and bill BLC Management full disconnect charges.

1.8.1 Prior to submitting an order pursuant to this Agreement for high capacity Dedicated Transport or high capacity Loops, BLC Management shall undertake a reasonably diligent inquiry to determine whether BLC Management is entitled to unbundled access to such Network Elements in accordance with the terms of this Agreement. By submitting any such order, BLC Management self-certifies that to the best of BLC Management's knowledge, the high capacity Dedicated Transport or high capacity Loop requested is available as a Network Element pursuant to this Agreement. Upon receiving such order, except in wire centers set forth on the Master List of Unimpaired Wire Centers, or AT&T's List of Unimpaired Wire Centers, AT&T shall process the request in reliance upon BLC Management's self-certification. To the extent AT&T believes that such request does not comply with the terms of this Agreement, AT&T shall seek dispute resolution in accordance with the General Terms and Conditions of this Agreement. In the event such dispute is resolved in AT&T's favor, AT&T shall bill BLC Management the difference between the rates for such circuits pursuant to this Agreement and the applicable nonrecurring and recurring charges for the equivalent tariffed service from the date of installation to the date the circuit is transitioned to the equivalent tariffed service. Within thirty (30) days following a decision finding in AT&T's favor, BLC Management shall submit an LSR(s) or spreadsheet(s) identifying those non-compliant circuits to be transitioned to tariffed services or disconnected.

1.8.2 In the event that (1) AT&T designated a wire center as unimpaired as set forth on the Master List of Unimpaired Wire Centers on the AT&T Interconnection Web site, or AT&T's List of Unimpaired Wire Centers, (2) as a result of such designation, BLC Management converted high capacity Dedicated Transport or high capacity Loops to other services or ordered new services as services other than high capacity Dedicated Transport or high capacity Loop Network Elements subsequent to March 10, 2005, (3) BLC Management otherwise would have been entitled to high capacity Dedicated Transport or high capacity Loops in such wire center at the time such alternative services were provisioned, and (4) AT&T acknowledges, or a state or federal regulatory body with authority determines, that, at the time AT&T designated such wire center as unimpaired, such wire center did not meet the FCC's unimpairment criteria, then upon request of BLC Management consistent with the applicable ordering processes as reflected in the Guides located on AT&T's Interconnection Web site no later than sixty (60) days after AT&T acknowledges or the state or federal regulatory body issues an order

making such a finding, AT&T shall transition to high capacity Dedicated Transport or high capacity Loops, as appropriate, any alternative services in such wire center that were established after such wire center was designated as unimpaired. In such instances, AT&T shall refund to BLC Management the difference between the rate paid by BLC Management for such services and the applicable rates set forth herein for high capacity Dedicated Transport or high capacity Loops, including but not limited to any charges associated with the Conversion (as defined in Section 1.6 above) from high capacity Dedicated Transport or high capacity Loops to other wholesale services, if applicable, for the period from the later of March 11, 2005, or the date the circuit became a wholesale service to the date the circuit is transitioned to high capacity Dedicated Transport or high capacity Loop as described in this Section.

1.9 BLC Management may utilize Network Elements and Other Services to provide services in accordance with this Agreement, as long as such services are consistent with industry standards and applicable AT&T Technical References.

1.10 AT&T will perform Routine Network Modifications (RNM) in accordance with FCC 47 C.F.R. § 51.319 (a)(7) and (e)(4) for Loops and Dedicated Transport provided under this Attachment. If AT&T has anticipated such RNM and performs them during normal operations and has recovered the costs for performing such modifications through the rates set forth in Exhibit A, then AT&T shall perform such RNM at no additional charge. RNM shall be performed within the intervals established for the Network Element and subject to the service quality measurements and associated remedies set forth in Attachment 9 to the extent such RNM were anticipated in the setting of such intervals. If AT&T has not anticipated a requested network modification as being a RNM and has not recovered the costs of such RNM in the rates set forth in Exhibit A, then such request will be handled as a project on an individual case basis. AT&T will provide a price quote for the request and, upon receipt of payment from BLC Management, AT&T shall perform the RNM.

1.10.1 Notwithstanding the foregoing, for the states of Alabama and Georgia, AT&T shall perform RNM at no additional charge, provided however, for any RNM performed by AT&T for which costs are not recovered through existing rates, AT&T can seek resolution from the Commission.

1.11 <u>Commingling of Services</u>

1.11.1 Commingling means the connecting, attaching, or otherwise linking of a Network Element, or a Combination, to one or more Telecommunications Services or facilities that BLC Management has obtained at wholesale from AT&T, or the combining of a Network Element or Combination with one or more such wholesale Telecommunications Services or facilities. BLC Management must

comply with all rates, terms or conditions applicable to such wholesale Telecommunications Services or facilities.

1.11.2 Subject to the limitations set forth elsewhere in this Attachment, AT&T shall not deny access to a Network Element or a Combination on the grounds that one or more of the elements: (1) is connected to, attached to, linked to, or combined with such a facility or service obtained from AT&T; or (2) shares part of AT&T's network with access services or inputs for mobile wireless services and/or interexchange services.

1.11.3 Except for the state of Georgia, notwithstanding any other provision of this Agreement, AT&T shall not be obligated to commingle or combine, pursuant to this Agreement, Network Elements or Combinations with any service, network element or other offering that it is obligated to make available pursuant only to Section 271 of the Act.

1.11.4 Unless otherwise agreed to by the Parties, the Network Element portion of a commingled circuit will be billed at the rates set forth in this Agreement and the remainder of the circuit or service will be billed in accordance with AT&T's tariffed rates, rates set forth in a separate agreement between the Parties, or in the state of Georgia only, in accordance with the rates set forth in Exhibit 1 of this Attachment, as applicable.

1.11.5 When multiplexing equipment is attached to a commingled circuit, the multiplexing equipment will be billed from the same agreement or tariff as the higher bandwidth circuit. Central Office Channel Interfaces (COCI) will be billed from the same agreement or tariff as the lower bandwidth circuit.

1.11.6 The Commingling process and requirements will be handled in accordance with the guidelines set forth in the Ordering Guidelines and Processes and CLEC Information Packages as referenced in Sections 1.13.1 and 1.13.2 below.

1.12 Terms and conditions for order cancellation charges and Service Date Advancement Charges will apply in accordance with Attachment 6 and are incorporated herein by this reference. The charges shall be as set forth in Exhibit A.

1.13 <u>Ordering Guidelines and Processes</u>

1.13.1 For information regarding Ordering Guidelines and Processes for various Network Elements, Combinations and Other Services, BLC Management should refer to the "Guides" section of the AT&T Interconnection Web site.

1.13.2 Additional information may also be found in the individual CLEC Information Packages, located at the "CLEC UNE Products" on AT&T's Interconnection Web site.

1.13.3 The provisioning of Network Elements, Combinations and Other Services to BLC Management's Collocation Space will require cross-connections within the central office to connect the Network Element, Combinations or Other Services to the demarcation point associated with BLC Management's Collocation Space. These cross-connects are separate components that are not considered a part of the Network Element, Combinations or Other Services and, thus, have a separate charge pursuant to Attachment 4.

1.13.4 Testing/Trouble Reporting

1.13.4.1 BLC Management will be responsible for testing and isolating troubles on Network Elements. BLC Management must test and isolate trouble to the AT&T network before reporting the trouble to the Network Elements Customer Wholesale Interconnection Network Services (CWINS) Center. Upon request from AT&T at the time of the trouble report, BLC Management will be required to provide the results of the BLC Management test which indicate a problem on the AT&T network.

1.13.4.2 Once BLC Management has isolated a trouble to the AT&T network, and has issued a trouble report to AT&T, AT&T will take the actions necessary to repair the Network Element when trouble is found. AT&T will repair its network facilities to its wholesale customers in the same time frames that AT&T repairs similar services to its retail customers.

1.13.4.3 If BLC Management reports a trouble on an AT&T Network Element and no trouble is found in AT&T's network, AT&T will charge BLC Management a Maintenance of Service Charge for any dispatching and testing (both inside and outside the CO) required by AT&T in order to confirm the Network Element's working status. AT&T will assess the applicable Maintenance of Service rates from BellSouth's FCC No.1 Tariff, Section 13.3.1.

1.13.4.4 In the event AT&T must dispatch to the customer's location more than once due to incorrect or incomplete information provided by BLC Management (e.g., incomplete address, incorrect contact name/number, etc.), AT&T will bill BLC Management for each additional dispatch required to repair the Network Element due to the incorrect/incomplete information provided. AT&T will assess the applicable Maintenance of Service rates from BellSouth's FCC No.1 Tariff, Section 13.3.1.

2 Loops

2.1 General. The local loop Network Element is defined as a transmission facility that AT&T provides pursuant to this Attachment between a distribution frame (or its equivalent) in AT&T's central office and the loop demarcation point at a customer premises (Loop). Facilities that do not terminate at a demarcation point at a customer premises, including, by way of example, but not limited to, facilities that terminate to another carrier's switch or premises, a cell site, Mobile Switching Center or base station, do not constitute local Loops. The Loop Network Element includes all features, functions, and capabilities of the transmission facilities, including the network interface device, and attached electronics (except those used for the provision of advanced services, such as Digital Subscriber Line Access Multiplexers (DSLAMs)), optronics and intermediate devices (including repeaters and load coils) used to establish the transmission path to the customer's premises, including inside wire owned or controlled by AT&T. BLC Management shall purchase the entire bandwidth of the Loop and, except as required herein or as otherwise agreed to by the Parties, AT&T shall not subdivide the frequency of the Loop.

2.1.1 The Loop does not include any packet switched features, functions or capabilities.

2.1.2 Fiber to the Home (FTTH) loops are local loops consisting entirely of fiber optic cable, whether dark or lit, serving a customer's premises or, in the case of predominantly residential multiple dwelling units (MDUs), a fiber optic cable, whether dark or lit, that extends to the MDU minimum point of entry (MPOE). Fiber to the Curb (FTTC) loops are local loops consisting of fiber optic cable connecting to a copper distribution plant that is not more than five hundred (500) feet from the customer's premises or, in the case of predominantly residential MDUs, not more than five hundred (500) feet from the MDU's MPOE. The fiber optic cable in a FTTC loop must connect to a copper distribution plant at a serving area interface from which every other copper distribution subloop also is not more than five hundred (500) feet from the respective customer's premises.

2.1.2.1 In new build (Greenfield) areas, where AT&T has only deployed FTTH/FTTC facilities, AT&T is under no obligation to provide Loops. FTTH facilities include fiber loops deployed to the MPOE of a MDU that is predominantly residential regardless of the ownership of the inside wiring from the MPOE to each customer in the MDU.

2.1.2.2 In FTTH/FTTC overbuild situations where AT&T also has copper Loops, AT&T will make those copper Loops available to BLC Management on an unbundled basis, until such time as AT&T chooses to retire those copper Loops using the FCC's network disclosure requirements. In these cases, AT&T will offer a sixty-four (64) kilobits per second (kbps) voice grade channel over its FTTH/FTTC facilities.

2.1.2.3 Notwithstanding the foregoing, in the states of Alabama and Louisiana, AT&T shall make available DS1 and DS3 Loops in any wire center where AT&T is required to provide such Loop facilities. In the states of North Carolina and South Carolina, AT&T shall make available DS1 Loops in any wire center where AT&T is required to provide such Loop facilities.

2.1.2.4 Furthermore, in FTTH/FTTC overbuild areas where AT&T has not yet retired copper facilities, AT&T is not obligated to ensure that such copper Loops in that area are capable of transmitting signals prior to receiving a request for access to such Loops by BLC Management. If a request is received by AT&T for a copper Loop, and the copper facilities have not yet been retired, AT&T will restore the copper Loop to serviceable condition if technically feasible. Except for the state of Georgia, in these instances of Loop orders in an FTTH/FTTC overbuild area, AT&T's standard Loop provisioning interval will not apply, and the order will be handled on a project basis by which the Parties will negotiate the applicable provisioning interval. For the state of Georgia, in these instances of Loop orders in an FTTH/FTTC overbuild area, AT&T's standard Loop provisioning interval will apply.

2.1.3 A hybrid Loop is a local Loop, composed of both fiber optic cable, usually in the feeder plant, and copper twisted wire or cable, usually in the distribution plant. AT&T shall provide BLC Management access to hybrid Loops pursuant to the requirements of 47 C.F.R. § 51.319(a)(2). AT&T is not required to provide access to the packet switched features, functions and capabilities of its hybrid Loops.

2.1.3.1 AT&T shall not engineer the transmission capabilities of its network in a manner, or engage in any policy, practice, or procedure, that disrupts or degrades access to a local Loop or Subloop, including the time division multiplexing-based features, functions and capabilities of a hybrid Loop, for which a requesting telecommunications carrier may obtain or has obtained access pursuant to this Attachment.

2.1.4 <u>DS1 and DS3 Loop Requirements</u>

2.1.4.1 For purposes of this Section 2, a Business Line is defined in 47 C.F.R. § 51.5.

2.1.4.2 For purposes of this Section 2, a "Fiber-Based Collocator" is defined in 47 C.F.R. § 51.5.

2.1.4.3 Notwithstanding anything to the contrary in this Agreement, AT&T shall make available DS1 and DS3 Loops as described in this Agreement, except in any wire center meeting the criteria described below:

2.1.4.3.1 DS1 Loops at any location within the service area of a wire center containing sixty thousand (60,000) or more Business Lines and four (4) or more fiber-based collocators.

2.1.4.3.2 DS3 Loops at any location within the service area of a wire center containing thirty-eight thousand (38,000) or more Business Lines and four (4) or more fiber-based collocators.

2.1.4.4 The Master List of Unimpaired Wire Centers and AT&T's List of Unimpaired Wire Centers as described in Section 1.8 sets forth the list of wire centers meeting the criteria set forth in Sections 2.1.4.3.1 and 2.1.4.3.2 above as of March 11, 2005.

2.1.4.5 Once any wire center exceeds both of the thresholds set forth in Section 2.1.4.3.1 above, no future DS1 Loop unbundling will be required in that wire center.

2.1.4.6 Once any wire center exceeds both of the thresholds set forth in Section 2.1.4.3.2 above, no future DS3 Loop unbundling will be required in that wire center.

2.1.4.7 <u>Modifications and Updates to the Wire Center Lists and Subsequent Transition Periods</u>

2.1.4.7.1 In the event AT&T identifies additional wire centers that meet the criteria set forth in Section 2.1.4.3 above but that were not included in the Master List of Unimpaired Wire Centers and AT&T's List of Unimpaired Wire Centers, AT&T shall include such additional wire centers in a carrier notification letter (CNL). Each such list of additional wire centers shall be considered a "Subsequent Wire Center List". AT&T will follow any notification procedures set forth in applicable Commission orders.

2.1.4.7.2 BLC Management shall have thirty (30) business days to dispute the additional wire centers listed on AT&T's CNL. Absent such dispute, effective thirty (30) business days after the date of an AT&T CNL providing a Subsequent Wire Center List, AT&T shall not be required to unbundle DS1 and/or DS3 Loops, as applicable, in such additional wire center(s), except pursuant to the self-certification process as set forth in Section 1.8 of this Attachment.

2.1.4.7.2.1 For purposes of Section 2.1.4.7 above, AT&T shall make available DS1 and DS3 Loops that were in service for BLC Management in a wire center on the Subsequent Wire Center List as of the thirtieth (30th) business day after the date of AT&T's CNL identifying the Subsequent Wire Center List (Subsequent Embedded Base) until one hundred eighty (180) days after the thirtieth (30th) business day from the date of AT&T's CNL identifying the Subsequent Wire Center List (Subsequent Transition Period).

2.1.4.7.2.2 The rates set forth in Exhibit B shall apply to the Subsequent Embedded Base during the Subsequent Transition Period.

2.1.4.7.2.3 No later than one hundred eighty (180) days from AT&T's CNL identifying the Subsequent Wire Center List, BLC Management shall submit an LSR(s) or spreadsheet(s) as applicable, identifying the Subsequent Embedded Base of circuits to be disconnected or converted to other AT&T services.

2.1.4.7.2.3.1 In the case of disconnection, the applicable disconnect charges set forth in this Agreement shall apply.

2.1.4.7.2.3.2 If BLC Management fails to submit the LSR(s) or spreadsheet(s) for all of its Subsequent Embedded Base by one hundred eighty (180) days after the date of AT&T's CNL identifying the Subsequent Wire Center List, AT&T will identify BLC Management's remaining Subsequent Embedded Base, if any, and will transition such circuits to the equivalent tariffed AT&T service(s), or in the case of Georgia, to the equivalent 271 service(s) set forth in Exhibit 1. In the states of Florida, Mississippi and South Carolina, those circuits identified and transitioned by AT&T shall be subject to the applicable disconnect charges as set forth in this Agreement and the full nonrecurring charges for installation of the equivalent tariffed AT&T service as set forth in AT&T's tariffs. In the states of Alabama, Georgia, and North Carolina, those circuits identified and transitioned by AT&T shall be subject to the applicable switch-as-is rates set forth in Exhibit A of Attachment 2. In the state of Louisiana, those circuits identified and transitioned by AT&T shall be subject to the full nonrecurring charges for installation of the equivalent tariffed AT&T service as set forth in AT&T's tariffs.

2.1.4.7.2.3.3 For Subsequent Embedded Base circuits converted pursuant to Section 2.1.4.7.2.3 above or transitioned pursuant to Section 2.1.4.7.2.3.2 above, the applicable recurring tariff charges shall apply as of the earlier of the date each circuit is converted or transitioned, as applicable, or the first day after the end of the Subsequent Transition Period.

2.1.5 Where facilities are available, AT&T will install Loops in compliance with AT&T's Products and Services Interval Guide available at AT&T's Interconnection Web site. For orders of fifteen (15) or more Loops, the installation and any applicable Order Coordination (OC) as described below will be handled on a project basis, and the intervals will be set by the AT&T project manager for that order. When Loops require a Service Inquiry (SI) prior to issuing the order to determine if facilities are available, the interval for the SI process is separate from the installation interval.

2.1.6 The Loop shall be provided to BLC Management in accordance with AT&T's TR73600 Unbundled Local Loop Technical Specification and applicable industry standard technical references.

2.1.7 AT&T will only provision, maintain and repair the Loops to the standards that are consistent with the type of Loop ordered.

2.1.7.1 When an AT&T technician is required to be dispatched to provision the Loop, AT&T will tag the Loop with the Circuit ID number and the name of the ordering CLEC. When a dispatch is not required to provision the Loop, AT&T will tag the Loop on the next required visit to the customer's location. If BLC Management wants to ensure the Loop is tagged during the provisioning process for Loops that may not require a dispatch (e.g., UVL-SL1, UVL-SL2, and UCL-ND), BLC Management may order Loop Tagging. Rates for Loop Tagging are as set forth in Exhibit A.

2.1.7.2 For voice grade Loop orders (or orders for Loops intended to provide voice grade services), BLC Management shall have dial-tone available for that Loop forty-eight (48) hours prior to the Loop order completion due date. This applies to all conversions from one provider to another provider as well as Service Rearrangements as set forth in Section 2.1.12. Where BLC Management dial-tone is not available on the conversion date the Loop will not be cut over and the Loop order will be returned to BLC Management for rescheduling.

2.1.8 <u>OC and Order Coordination-Time Specific (OC-TS)</u>

2.1.8.1 OC allows AT&T and BLC Management to coordinate the installation of the SL2 Loops, Unbundled Digital Loops (UDL) and other Loops where OC may be purchased as an option, to BLC Management's facilities to limit customer service outage. OC is available when the Loop is provisioned over an existing circuit that is currently providing service to the customer. OC for physical conversions will be scheduled at AT&T's discretion during normal working hours on the committed due date. OC shall be provided in accordance with the chart set forth below.

2.1.8.2 OC-TS allows BLC Management to order a specific time for OC to take place. AT&T will make commercially reasonable efforts to accommodate BLC Management's specific conversion time request. However, AT&T reserves the right to negotiate with BLC Management a conversion time based on load and appointment control when necessary. This OC-TS is a chargeable option for all Loops except Unbundled Copper Loops (UCL) and is billed in addition to the OC charge. BLC Management may specify a time between 9:00 a.m. and 4:00 p.m. (location time) Monday through Friday (excluding holidays). If BLC Management specifies a time outside this window, or selects a time or quantity of Loops that requires AT&T technicians to work outside normal work hours, overtime charges will apply in addition to the OC and OC-TS charges. Overtime charges will be applied based on the amount of overtime worked and in accordance with the rates established in AT&T's intrastate Access Services Tariff, Section E13.2, for each state. The OC-TS charges for an order due on the same day at the same location will be applied on a per LSR basis.

2.1.9

	Order Coordination (OC)	Order Coordination – Time Specific (OC-TS)	Test Points	DLR	Charge for Dispatch and Testing if No Trouble Found
SL-1 **(Non-Designed)**	Chargeable Option	Chargeable Option	Not available	Chargeable Option – ordered as Engineering Information Document	Charged for Dispatch inside and outside Central Office
UCL-ND **(Non-Designed)**	Chargeable Option	Not Available	Not Available	Chargeable Option – ordered as Engineering Information Document	Charged for Dispatch inside and outside Central Office
Unbundled Voice Loops - SL-2 (including 2- and 4-wire UVL) (Designed)	Included	Chargeable Option	Included	Included	Charged for Dispatch outside Central Office
Unbundled Digital Loop (Designed)	Included	Chargeable Option	Included (where appropriate)	Included	Charged for Dispatch outside Central Office
Unbundled Copper Loop (Designed)	Chargeable in accordance with Section 2	Not available	Included	Included	Charged for Dispatch outside Central Office
For UVL-SL1 and UCLs, BLC Management must order and will be billed for both OC and OC-TS if requesting OC-TS.					

2.1.10 <u>CLEC to CLEC Conversions for Unbundled Loops</u>

2.1.10.1 The CLEC to CLEC conversion process for Loops may be used by BLC Management when converting an existing Loop from another CLEC for the same customer. The Loop type being converted must be included in BLC Management's Agreement before requesting a conversion.

2.1.10.2 To utilize the CLEC to CLEC conversion process, the Loop being converted must be the same Loop type with no requested changes to the Loop, must serve the same customer location from the same serving wire center, and must not require an outside dispatch to provision.

2.1.10.3 The Loops converted to BLC Management pursuant to the CLEC to CLEC conversion process shall be provisioned in the same manner and with the same functionality and options as described in this Agreement for the specific Loop type.

2.1.11 Bulk Migration

2.1.11.1 AT&T will make available to BLC Management a Bulk Migration process pursuant to which BLC Management may request to migrate port/loop combinations, provisioned pursuant to a separate agreement between the parties, to Loops (UNE-L). The Bulk Migration process may be used if such loop/port combinations are (1) associated with two (2) or more Existing Account Telephone Numbers (EATNs); and (2) located in the same Central Office. The terms and conditions for use of the Bulk Migration process are described in the AT&T CLEC Information Package. The CLEC Information Package is located on AT&T's Interconnection Web site. The rates for the Bulk Migration process shall be the nonrecurring rates associated with the Loop type being requested on the Bulk Migration, as set forth in Exhibit A. Additionally, OSS charges will also apply. Loops connected to Integrated Digital Loop Carrier (IDLC) systems will be migrated pursuant to Section 2.6 below.

2.1.11.2 Should BLC Management request migration for two (2) or more EATNs containing fifteen (15) or more circuits, BLC Management must use the Bulk Migration process referenced in 2.1.11.1 above.

2.1.12 Unbundled Loop (DS1 and below) Service Rearrangements

2.1.12.1 The Unbundled Loop Service Rearrangement processes will allow changes to be made to a working Loop facility assignment within the same end-user serving wire center. Service Rearrangements will result in service outages to the customer during the time the Loop is being moved.

2.1.12.2 An Unbundled Loop Service Rearrangement connecting facility change (CFC) allows BLC Management to change its installed Loop from one working facility assignment to another facility assignment. CFC includes Connecting Facility Assignment (CFA) and Cable ID & Pair changes within same collocation arrangement or from collocation to collocation. CFA changes are allowed within the same multiplexer or from one multiplexer to another multiplexer. For a CFC, the Loop class of service, Loop type and the customer must remain the same.

2.1.12.3 An Unbundled Loop Service Rearrangement connecting facility move (CFM) allows BLC Management to move the Loop facility assignment from a collocation arrangement to a multiplexer or from a multiplexer to a collocation arrangement. CFMs require a change to the Loop basic class of service. The Loop type and the customer must remain the same.

2.1.12.4 For Unbundled Loop Service Rearrangements, AT&T shall charge the applicable "Service Rearrangement change in Loop facility" rate found in Exhibit A.

2.1.12.5 The Unbundled Loop Service Rearrangement process and requirements will be handled in accordance with the guidelines set forth in the Ordering Guidelines and CLEC Information Packages as referenced in Sections 1.13.1 and 1.13.2 above.

2.1.13 <u>EEL to Loop Retermination</u>

2.1.13.1 BLC Management may utilize the EEL to Loop Retermination process to disconnect an EEL circuit and reterminate the Loop portion of the former EEL circuit to a collocation arrangement in the end-user's Serving Wire Center (EU SWC).

2.1.13.2 This process is available when the existing Loop portion of the EEL will be re-used and the resulting Loop will be subject to the rates, terms and conditions for that particular Loop as set forth in this Attachment. This process will apply only to EELs that include as a part of its combination a DS1 Loop, UVL-SL2 Loop, 4-Wire UDL Loop (64, 56 kbs) and a 2-Wire ISDN Loop.

2.1.13.3 AT&T shall charge the applicable EEL to Loop Retermination rates found in Exhibit A. BLC Management shall also be charged applicable manual service order, collocation cross-connect and EEL (including the Transport and Loop portions of the EEL) disconnect charges as set forth in Exhibit A of this Attachment.

2.1.13.4 The EEL to Loop Retermination process is not available when a dispatch outside the serving wire center where the Loop terminates is required. If an outside dispatch is required, or if the Loop portion of the EEL is not one of the Loop types referenced in Section 2.1.13.2 above, or if BLC Management elects not to utilize the EEL to Loop Retermination process, BLC Management must submit an LSR to disconnect the entire EEL circuit, and must submit a separate LSR for the requested standalone Loop. In such cases, BLC Management will be charged the EEL disconnect charges and the full nonrecurring rates for installation of a new Loop, as set forth in Exhibit A.

2.1.13.5 The EEL to Loop Retermination process and requirements will be handled in accordance with the guidelines set forth in the Ordering Guidelines and CLEC Information Packages as referenced in Sections 1.13.1 and 1.13.2 above.

2.2 Unbundled Voice Loops (UVLs)

2.2.1 AT&T shall make available the following UVLs:

2.2.1.1 2-wire Analog Voice Grade Loop – SL1 (Non-Designed);

2.2.1.2 2-wire Analog Voice Grade Loop – SL2 (Designed); or

2.2.1.3 4-wire Analog Voice Grade Loop (Designed).

2.2.2 UVL may be provisioned using any type of facility that will support voice grade services. This may include loaded copper, non-loaded copper, digital loop carrier systems, fiber/copper combination (hybrid loop) or a combination of any of these facilities. AT&T, in the normal course of maintaining, repairing, and configuring its network, may also change the facilities that are used to provide any given voice grade circuit. This change may occur at any time. In these situations, AT&T will only ensure that the newly provided facility will support voice grade services. AT&T will not guarantee that BLC Management will be able to continue to provide any advanced services over the new facility. AT&T will offer UVL in two different service levels - Service Level One (SL1) and Service Level Two (SL2).

2.2.3 Unbundled Voice Loop - SL1 (UVL-SL1). Loops are 2-wire loop start circuits, will be non-designed, and will not have remote access test points. OC will be offered as a chargeable option on SL1 Loops when reuse of existing facilities has been requested by BLC Management, however, OC is always required on UCLs that involve the reuse of facilities that are currently providing service. BLC Management may also order OC-TS when a specified conversion time is requested. OC-TS is a chargeable option for any coordinated order and is billed in addition to the OC charge. An Engineering Information (EI) document can be ordered as a chargeable option. The EI document provides Loop Make-Up information which is similar to the information normally provided in a Design Layout Record (DLR). Upon issuance of a non-coordinated order in the service order system, SL1 Loops will be activated on the due date in the same manner and time frames that AT&T normally activates POTS-type Loops for its customers.

2.2.4 For an additional charge AT&T will make available Loop Testing so that BLC Management may request further testing on new UVL-SL1 Loops. Rates for Loop Testing are as set forth in Exhibit A.

2.2.5 Unbundled Voice Loop – SL2 (UVL-SL2). Loops may be 2-wire or 4-wire circuits, shall have remote access test points, and will be designed with a DLR provided to BLC Management. SL2 circuits can be provisioned with loop start, ground start or reverse battery signaling. OC is provided as a standard feature on SL2 Loops. The OC feature will allow BLC Management to coordinate the installation of the Loop with the disconnect of an existing customer's service

and/or number portability service. In these cases, AT&T will perform the order conversion with standard order coordination at its discretion during normal work hours.

2.3 Unbundled Digital Loops

2.3.1 AT&T will offer UDLs. UDLs are service specific, will be designed, will be provisioned with test points (where appropriate), and will come standard with OC and a DLR. The various UDLs are intended to support a specific digital transmission scheme or service.

2.3.2 AT&T shall make available the following UDLs, subject to restrictions set forth herein:

2.3.2.1 2-wire Unbundled ISDN Digital Loop;

2.3.2.2 2-wire Unbundled ADSL Compatible Loop;

2.3.2.3 2-wire Unbundled HDSL Compatible Loop;

2.3.2.4 4-wire Unbundled HDSL Compatible Loop;

2.3.2.5 4-wire Unbundled DS1 Digital Loop;

2.3.2.6 4-wire Unbundled Digital Loop/DS0 – 64 kbps, 56 kbps and below;

2.3.2.7 DS3 Loop; or

2.3.2.8 STS-1 Loop.

2.3.3 2-wire Unbundled ISDN Digital Loops. These will be provisioned according to industry standards for 2-Wire Basic Rate ISDN services and will come standard with a test point, OC, and a DLR. BLC Management will be responsible for providing AT&T with a Service Profile Identifier (SPID) associated with a particular ISDN-capable Loop and customer. With the SPID, AT&T will be able to adequately test the circuit and ensure that it properly supports ISDN service.

2.3.4 2-wire ADSL-Compatible Loop. This is a designed Loop that is provisioned according to Revised Resistance Design (RRD) criteria and may be up to eighteen thousand (18,000) feet long and may have up to six thousand (6,000) feet of bridged tap (inclusive of Loop length). The Loop is a 2-wire circuit and will come standard with a test point, OC, and a DLR.

2.3.5 2-wire or 4-wire HDSL-Compatible Loop. This is a designed Loop that meets Carrier Serving Area (CSA) specifications, may be up to twelve thousand (12,000) feet long and may have up to twenty-five hundred (2,500) feet of bridged tap

(inclusive of Loop length). It may be a 2-wire or 4-wire circuit and will come standard with a test point, OC, and a DLR.

2.3.6 4-wire Unbundled DS1 Digital Loop.

2.3.6.1 This is a designed 4-wire Loop that is provisioned according to industry standards for DS1 or Primary Rate ISDN services and will come standard with a test point, OC, and a DLR. A DS1 Loop may be provisioned over a variety of loop transmission technologies including copper, HDSL-based technology or fiber optic transport systems. It will include a 4-wire DS1 Network Interface at the customer's location. For the purposes of AT&T's unbundling obligations pursuant to this Agreement, for the states of Alabama, Florida, Georgia, Mississippi and South Carolina, DS1 Loops include 2-wire and 4-wire copper Loops capable of providing high-bit rate digital subscriber line services, such as 2-wire and 4-wire HDSL Compatible Loops. For the state of Louisiana, DS1 Loops include 2-wire and 4-wire HDSL-Compatible Loops to which the necessary electronics have been added to provide service speeds of 1.544 megabytes per second.

2.3.6.2 AT&T shall not provide more than ten (10) unbundled DS1 Loops to BLC Management at any single building in which DS1 Loops are available as unbundled Loops.

2.3.7 4-wire Unbundled Digital/DS0 Loop. These are designed 4-wire Loops that may be configured as sixty-four (64)kbps, fifty-six (56)kbps, nineteen (19)kbps, and other sub-rate speeds associated with digital data services and will come standard with a test point, OC, and a DLR.

2.3.8 DS3 Loop. DS3 Loop is a two-point digital transmission path which provides for simultaneous two-way transmission of serial, bipolar, return-to-zero isochronous digital electrical signals at a transmission rate of forty-four point seven thirty-six (44.736) megabits per second (Mbps) that is dedicated to the use of the ordering CLEC. It may provide transport for twenty-eight (28) DS1 channels, each of which provides the digital equivalent of twenty-four (24) analog voice grade channels. The interface to unbundled dedicated DS3 transport is a metallic-based electrical interface. For the purpose of AT&T's unbundling obligations pursuant to this Agreement, DS3 Loops include STS-1 Loops.

2.3.9 STS-1 Loop. STS-1 Loop is a high-capacity digital transmission path with SONET VT1.5 mapping that is dedicated for the use of the ordering customer. It is a two-point digital transmission path which provides for simultaneous two-way transmission of serial bipolar return-to-zero synchronous digital electrical signals at a transmission rate of fifty-one point eighty-four (51.84) Mbps. It may provide transport for twenty-eight (28) DS1 channels, each of which provides the digital equivalent of twenty-four (24) analog voice grade channels. The interface to unbundled dedicated STS-1 transport is a metallic-based electrical interface.

2.3.10 Both DS3 Loop and STS-1 Loop require a SI in order to ascertain availability.

2.3.11 DS3 services come with a test point and a DLR. Mileage is airline miles, rounded up and a minimum of one (1) mile applies. AT&T's TR73501 LightGate®Service Interface and Performance Specifications, Issue D, June 1995 applies to DS3 services.

2.3.12 BLC Management may obtain a maximum of a single Unbundled DS3 Loop to any single building in which DS3 Loops are available as Unbundled Loops.

2.4 Unbundled Copper Loops (UCL).

2.4.1 AT&T shall make available UCLs. The UCL is a copper twisted pair Loop that is unencumbered by any intervening equipment (e.g., filters, load coils, range extenders, digital loop carrier, or repeaters) and is not intended to support any particular telecommunications service. The UCL will be offered in two (2) types – Designed and Non-Designed.

2.4.2 Unbundled Copper Loop – Designed (UCL-D)

2.4.2.1 The UCL-D will be provisioned as a dry copper twisted pair (2-wire or 4-wire) Loop that is unencumbered by any intervening equipment (e.g., filters, load coils, range extenders, digital loop carrier, or repeaters).

2.4.2.2 A UCL-D will be eighteen thousand (18,000) feet or less in length and is provisioned according to Resistance Design parameters, may have up to six thousand (6,000) feet of bridged tap and will have up to thirteen hundred (1300) Ohms of resistance.

2.4.2.3 The UCL-D is a designed circuit, is provisioned with a test point, and comes standard with a DLR. OC is a chargeable option for a UCL-D; however, OC is always required on UCLs where a reuse of existing facilities has been requested by BLC Management.

2.4.2.4 These Loops are not intended to support any particular services and may be utilized by BLC Management to provide a wide-range of telecommunications services as long as those services do not adversely affect AT&T's network. This facility will include a Network Interface Device (NID) at the customer's location for the purpose of connecting the Loop to the customer's inside wire.

2.4.3 Unbundled Copper Loop – Non-Designed (UCL-ND)

2.4.3.1 The UCL–ND is provisioned as a dedicated 2-wire metallic transmission facility from AT&T's Main Distribution Frame (MDF) to a customer's premises (including the NID). The UCL-ND will be a "dry copper" facility in that it will not

have any intervening equipment such as load coils, repeaters, or digital access main lines (DAMLs), and may have up to six thousand (6,000) feet of bridged tap between the customer's premises and the serving wire center. The UCL-ND typically will be thirteen hundred (1300) Ohms resistance and in most cases will not exceed eighteen thousand (18,000) feet in length, although the UCL-ND will not have a specific length limitation. For Loops less than eighteen thousand (18,000) feet and with less than thirteen hundred (1300) Ohms resistance, the Loop will provide a voice grade transmission channel suitable for loop start signaling and the transport of analog voice grade signals. The UCL-ND will not be designed and will not be provisioned with either a DLR or a test point.

2.4.3.2 The UCL-ND facilities may be mechanically assigned using AT&T's assignment systems. Therefore, the Loop Makeup (LMU) process is not required to order and provision the UCL-ND. However, BLC Management can request LMU for which additional charges would apply.

2.4.3.3 For an additional charge, AT&T also will make available Loop Testing so that BLC Management may request further testing on the UCL-ND. Rates for Loop Testing are as set forth in Exhibit A.

2.4.3.4 UCL-ND Loops are not intended to support any particular service and may be utilized by BLC Management to provide a wide-range of telecommunications services as long as those services do not adversely affect AT&T's network. The UCL-ND will include a NID at the customer's location for the purpose of connecting the Loop to the customer's inside wire.

2.4.3.5 OC will be provided as a chargeable option and may be utilized when the UCL-ND provisioning is associated with the reuse of AT&T facilities. OC-TS does not apply to this product.

2.4.3.6 BLC Management may use AT&T's Unbundled Loop Modification (ULM) offering to remove excessive bridged taps and/or load coils from any copper Loop within the AT&T network. Therefore, some Loops that would not qualify as UCL-ND could be transformed into Loops that do qualify, using the ULM process.

2.5 <u>Unbundled Loop Modifications (Line Conditioning)</u>

2.5.1 Line Conditioning is defined as routine network modification that AT&T regularly undertakes to provide xDSL services to its own customers. This may include the removal of any device, from a copper Loop or copper Subloop that may diminish the capability of the Loop or Subloop to deliver high-speed switched wireline telecommunications capability, including xDSL service. Such devices include, load coils, excessive bridged taps, low pass filters, and range extenders. Excessive bridged taps are bridged taps that serves no network design purpose and that are

beyond the limits set according to industry standards and/or the AT&T's TR 73600 Unbundled Local Loop Technical Specification. AT&T shall provide Line Conditioning on Loops, as requested by BLC Management, even in instances where AT&T does not provide advanced services to the end user on that Loop.

2.5.2 AT&T will remove load coils only on copper Loops that are equal to or less than eighteen thousand (18,000) feet in length. AT&T will remove load coils on copper Subloops where the total loop distance (feeder plus distribution) from the AT&T central office to the end user is equal to or less than 18,000 feet or, if there is no copper feeder, the distance from the remote terminal (RT) to the end user is equal to or less than 18,000 feet.

2.5.3 For any copper loop being ordered by BLC Management which has over six thousand (6,000) feet of combined bridged tap will be modified, upon request from BLC Management, so that the loop will have a maximum of six thousand (6,000) feet of bridged tap. This modification will be performed at no additional charge to BLC Management. Loop conditioning orders that require the removal of bridged tap that serves no network design purpose on a copper Loop that will result in a combined total of bridged tap between two thousand five hundred (2,500) and six thousand (6,000) feet will be performed at the rates set forth in Exhibit A.

2.5.4 BLC Management may request removal of any unnecessary and non-excessive bridged tap (bridged tap between zero (0) and two thousand five hundred (2,500) feet which serves no network design purpose), at rates pursuant to AT&T's SC Process as mutually agreed to by the Parties.

2.5.5 Rates for ULM are as set forth in Exhibit A.

2.5.6 AT&T will not modify a Loop in such a way that it no longer meets the technical parameters of the original Loop type (e.g., voice grade, ADSL, etc.) being ordered.

2.5.7 If BLC Management requests ULM on a reserved facility for a new Loop order, AT&T may perform a pair change and provision a different Loop facility in lieu of the reserved facility with ULM if feasible. The Loop provisioned will meet or exceed specifications of the requested Loop facility as modified. BLC Management will not be charged for ULM if a different Loop is provisioned. For Loops that require a DLR or its equivalent, AT&T will provide LMU detail of the Loop provisioned.

2.5.8 BLC Management shall request Loop make up information pursuant to this Attachment prior to submitting a service inquiry and/or a LSR for the Loop type that BLC Management desires AT&T to condition.

2.5.9 When requesting ULM for a Loop that AT&T has previously provisioned for BLC Management, BLC Management will submit a SI to AT&T. If a spare Loop facility that meets the Loop modification specifications requested by BLC Management is available at the location for which the ULM was requested, BLC Management will have the option to change the Loop facility to the qualifying spare facility rather than to provide ULM. In the event that AT&T changes the Loop facility in lieu of providing ULM, BLC Management will not be charged for ULM but will only be charged the service order charges for submitting an order.

2.6 Loop Provisioning Involving IDLC

2.6.1 Where BLC Management has requested an Unbundled Loop and AT&T uses IDLC systems to provide the local service to the customer and AT&T has a suitable alternate facility available, AT&T will make such alternative facilities available to BLC Management. If a suitable alternative facility is not available, then to the extent it is technically feasible, AT&T will implement one of the following alternative arrangements for BLC Management (e.g., hairpinning):

1. Roll the circuit(s) from the IDLC to any spare copper that exists to the customer premises.
2. Roll the circuit(s) from the IDLC to an existing DLC that is not integrated.
3. If capacity exists, provide "side-door" porting through the switch.
4. If capacity exists, provide "Digital Access Cross-Connect System (DACS)-door" porting (if the IDLC routes through a DACS prior to integration into the switch).

2.6.2 Arrangements 3 and 4 above require the use of a designed circuit. Therefore, non-designed Loops such as the SL1 voice grade and UCL-ND may not be ordered in these cases.

2.6.2.1 If no alternate facility is available, and upon request from BLC Management, and if agreed to by both Parties, AT&T may utilize its SC process to determine the additional costs required to provision facilities. BLC Management will then have the option of paying the one-time SC rates to place the Loop.

2.7 Network Interface Device

2.7.1 The NID is defined as any means of interconnection of the customer's customer premises wiring to AT&T's distribution plant, such as a cross-connect device used for that purpose. The NID is a single line termination device or that portion of a multiple line termination device required to terminate a single line or circuit at the premises. The NID features two (2) independent chambers or divisions that separate the service provider's network from the customer's premises wiring. Each chamber or division contains the appropriate connection points or posts to which the service provider and the customer each make their connections. The

NID provides a protective ground connection and is capable of terminating cables such as twisted pair cable.

2.7.2 AT&T shall permit BLC Management to connect BLC Management's Loop facilities to the customer's customer premises wiring through the AT&T NID or at any other technically feasible point.

2.7.3 Access to NID

2.7.3.1 BLC Management may access the customer's premises wiring by any of the following means and BLC Management shall not disturb the existing form of electrical protection and shall maintain the physical integrity of the NID:

2.7.3.1.1 AT&T shall allow BLC Management to connect its Loops directly to AT&T's multi-line residential NID enclosures that have additional space and are not used by AT&T or any other telecommunications carriers to provide service to the premises;

2.7.3.1.2 Where an adequate length of the customer's customer premises wiring is present and environmental conditions permit, either Party may remove the customer premises wiring from the other Party's NID and connect such wiring to that Party's own NID;

2.7.3.1.3 Either Party may enter the subscriber access chamber or dual chamber NID enclosures for the purpose of extending a cross-connect or spliced jumper wire from the customer premises wiring through a suitable "punch-out" hole of such NID enclosures; or

2.7.3.1.4 BLC Management may request AT&T to make other rearrangements to the customer premises wiring terminations or terminal enclosure on a time and materials cost basis.

2.7.3.2 In no case shall either Party remove or disconnect the other Party's loop facilities from either Party's NIDs, enclosures, or protectors unless the applicable Commission has expressly permitted the same and the disconnecting Party provides prior notice to the other Party. In such cases, it shall be the responsibility of the Party disconnecting loop facilities to leave undisturbed the existing form of electrical protection and to maintain the physical integrity of the NID. It will be BLC Management's responsibility to ensure there is no safety hazard, and BLC Management will hold AT&T harmless for any liability associated with the removal of the AT&T Loop from the AT&T NID. Furthermore, it shall be the responsibility of the disconnecting Party, once the other Party's loop has been disconnected from the NID, to reconnect the disconnected loop to a nationally recognized testing laboratory listed station protector, which has been grounded as per Article 800 of the National Electrical Code. If no spare station protector exists

in the NID, the disconnected loop must be appropriately cleared, capped and stored.

2.7.3.3 BLC Management shall not remove or disconnect ground wires from AT&T's NIDs, enclosures, or protectors.

2.7.3.4 BLC Management shall not remove or disconnect NID modules, protectors, or terminals from AT&T's NID enclosures.

2.7.3.5 Due to the wide variety of NID enclosures and outside plant environments, AT&T will work with BLC Management to develop specific procedures to establish the most effective means of implementing this section if the procedures set forth herein do not apply to the NID in question.

2.7.4 Technical Requirements

2.7.4.1 The NID shall provide an accessible point of interconnection and shall maintain a connection to ground.

2.7.4.2 If an existing NID is accessed, it shall be capable of transferring electrical analog or digital signals between the customer's customer premises and the distribution media and/or cross-connect to BLC Management's NID.

2.7.4.3 Existing AT&T NIDs will be operational and provided in "as is" condition. BLC Management may request AT&T to do additional work to the NID on a time and material basis. When BLC Management deploys its own local loops in a multiple-line termination device, BLC Management shall specify the quantity of NID connections that it requires within such device.

2.8 Subloop Distribution Elements.

2.8.1 Where facilities permit, AT&T shall offer access to its Unbundled Subloop Distribution (USLD) elements in accordance with 47 C.F.R. § 51.319(b) as specified herein.

2.8.2 Unbundled Subloop Distribution

2.8.2.1 The USLD facility is a dedicated transmission facility that AT&T provides from a customer's point of demarcation to an AT&T cross-connect device. The AT&T cross-connect device may be located within a remote terminal (RT) or a stand-alone cross-box in the field or in the equipment room of a building. The USLD media is a copper twisted pair that can be provisioned as a 2-wire or 4-wire facility. AT&T will make available the following subloop distribution offerings where facilities exist:

USLD – Voice Grade (USLD-VG)

Unbundled Copper Subloop (UCSL)
USLD – Intrabuilding Network Cable (USLD-INC (aka riser cable))

2.8.2.2 USLD-VG is a copper subloop facility from the cross-box in the field up to and including the point of demarcation at the customer's premises and may have load coils.

2.8.2.3 UCSL is a copper facility eighteen thousand (18,000) feet or less in length provided from the cross-box in the field up to and including the customer's point of demarcation. If available, this facility will not have any intervening equipment such as load coils between the customer and the cross-box.

2.8.2.3.1 If BLC Management requests a UCSL and it is not available, BLC Management may request the copper Subloop facility be modified pursuant to the ULM process to remove load coils and/or excessive bridged taps. If load coils and/or excessive bridged taps are removed, the facility will be classified as a UCSL.

2.8.2.4 USLD-INC is the distribution facility owned or controlled by AT&T inside a building or between buildings on the same property that is not separated by a public street or road. USLD-INC includes the facility from the cross-connect device in the building equipment room up to and including the point of demarcation at the customer's premises.

2.8.2.4.1 Upon request for USLD-INC from BLC Management, AT&T will install a cross-connect panel in the building equipment room for the purpose of accessing USLD-INC pairs from a building equipment room. The cross-connect panel will function as a single point of interconnection (SPOI) for USLD-INC and will be accessible by multiple carriers as space permits. AT&T will place cross-connect blocks in twenty five (25) pair increments for BLC Management's use on this cross-connect panel. BLC Management will be responsible for connecting its facilities to the twenty five (25) pair cross-connect block(s).

2.8.2.5 For access to Voice Grade USLD and UCSL, BLC Management shall install a cable to the AT&T cross-box pursuant to the terms and conditions for physical collocation for remote sites set forth in Attachment 4. This cable would be connected by an AT&T technician within the AT&T cross-box during the set-up process. BLC Management's cable pairs can then be connected to AT&T's USL within the AT&T cross-box by the AT&T technician.

2.8.2.6 Through the SI process, AT&T will determine whether access to USLs at the location requested by BLC Management is technically feasible and whether sufficient capacity exists in the cross-box. If existing capacity is sufficient to meet BLC Management's request, then AT&T will perform the site set-up as described in the CLEC Information Package, located at AT&T's Interconnection Web site.

2.8.2.7 The site set-up must be completed before BLC Management can order Subloop pairs. For the site set-up in an AT&T cross-connect box in the field, AT&T will perform the necessary work to splice BLC Management's cable into the cross-connect box. For the site set-up inside a building equipment room, AT&T will perform the necessary work to install the cross-connect panel and the connecting block(s) that will be used to provide access to the requested USLs.

2.8.2.8 Once the site set-up is complete, BLC Management will request Subloop pairs through submission of a LSR form to the LCSC. OC is required with USL pair provisioning when BLC Management requests reuse of an existing facility, and the OC charge shall be billed in addition to the USL pair rate. For expedite requests by BLC Management for Subloop pairs, expedite charges will apply for intervals less than five (5) days.

2.8.2.9 USLs will be provided in accordance with AT&T's TR 73600 Unbundled Local Loop Technical Specifications.

2.8.3 Unbundled Network Terminating Wire (UNTW)

2.8.3.1 UNTW is unshielded twisted copper wiring that is used to extend circuits from an intra-building network cable terminal or from a building entrance terminal to an individual customer's point of demarcation. It is the final portion of the Loop that in multi-subscriber configurations represents the point at which the network branches out to serve individual subscribers.

2.8.3.2 This element will be provided in MDUs and/or Multi-Tenants Units (MTUs) where either Party owns wiring all the way to the customer's premises. Neither Party will provide this element in locations where the property owner provides its own wiring to the customer's premises, where a third party owns the wiring to the customer's premises.

2.8.3.3 Requirements

2.8.3.3.1 On a multi-unit premises, upon request of the other Party (Requesting Party), the Party owning the network terminating wire (Provisioning Party) will provide access to UNTW pairs on an Access Terminal that is suitable for use by multiple carriers at each Garden Terminal or Wiring Closet.

2.8.3.3.2 The Provisioning Party shall not be required to install new or additional NTW beyond existing NTW to provision the services of the Requesting Party.

2.8.3.3.3 In existing MDUs and/or MTUs in which AT&T does not own or control wiring (INC/NTW) to the customers premises, and BLC Management does own or control such wiring, BLC Management will install UNTW Access Terminals for

AT&T under the same terms and conditions as AT&T provides UNTW Access Terminals to BLC Management.

2.8.3.3.4 In situations in which AT&T activates a UNTW pair, AT&T will compensate BLC Management for each pair activated commensurate to the price specified in BLC Management's Agreement.

2.8.3.3.5 Upon receipt of the UNTW SI requesting access to the Provisioning Party's UNTW pairs at a multi-unit premises, representatives of both Parties will participate in a meeting at the site of the requested access. The purpose of the site visit will include discussion of the procedures for installation and location of the Access Terminals. By request of the Requesting Party, an Access Terminal will be installed either adjacent to each of the Provisioning Party's Garden Terminal or inside each Wiring Closet. The Requesting Party will deliver and connect its central office facilities to the UNTW pairs within the Access Terminal. The Requesting Party may access any available pair on an Access Terminal. A pair is available when a pair is not being utilized to provide service or where the customer has requested a change in its local service provider to the Requesting Party. Prior to connecting the Requesting Party's service on a pair previously used by the Provisioning Party, the Requesting Party is responsible for ensuring the customer is no longer using the Provisioning Party's service or another CLEC's service before accessing UNTW pairs.

2.8.3.3.6 Access Terminal installation intervals will be established on an individual case basis.

2.8.3.3.7 The Requesting Party is responsible for obtaining the property owner's permission for the Provisioning Party to install an Access Terminal(s) on behalf of the Requesting Party. The submission of the SI by the Requesting Party will serve as certification by the Requesting Party that such permission has been obtained. If the property owner objects to Access Terminal installations that are in progress or within thirty (30) days after completion and demands removal of Access Terminals, the Requesting Party will be responsible for costs associated with removing Access Terminals and restoring the property to its original state prior to Access Terminals being installed.

2.8.3.3.8 The Requesting Party shall indemnify and hold harmless the Provisioning Party against any claims of any kind that may arise out of the Requesting Party's failure to obtain the property owner's permission. The Requesting Party will be billed for nonrecurring and recurring charges for accessing UNTW pairs at the time the Requesting Party activates the pair(s). The Requesting Party will notify the Provisioning Party within five (5) business days of activating UNTW pairs using the LSR form.

2.8.3.3.9 If a trouble exists on a UNTW pair, the Requesting Party may use an alternate spare pair that serves that customer if a spare pair is available. In such cases, the Requesting Party will re-terminate its existing jumper from the defective pair to the spare pair. Alternatively, the Requesting Party will isolate and report troubles in the manner specified by the Provisioning Party. The Requesting Party must tag the UNTW pair that requires repair. If the Provisioning Party dispatches a technician on a reported trouble call and no UNTW trouble is found, the Provisioning Party will charge Requesting Party for time spent on the dispatch and testing the UNTW pair(s).

2.8.3.3.10 If the Requesting Party initiates the Access Terminal installation and the Requesting Party has not activated at least ten percent (10%) of the capacity of the Access Terminal installed pursuant to the Requesting Party's request for an Access Terminal within six (6) months of installation of the Access Terminal, the Provisioning Party will bill the Requesting Party a nonrecurring charge equal to the actual cost of provisioning the Access Terminal.

2.8.3.3.11 If the Provisioning Party determines that the Requesting Party is using the UNTW pairs without reporting the activation of the pairs, the Requesting Party will be billed for the use of that pair back to the date the customer began receiving service from the Requesting Party at that location. Upon request, the Requesting Party will provide copies of its billing record to substantiate such date. If the Requesting Party fails to provide such records, then the Provisioning Party will bill the Requesting Party back to the date of the Access Terminal installation.

2.9 Loop Makeup

2.9.1 Description of Service

2.9.1.1 AT&T shall make available to BLC Management LMU information with respect to Loops that are required to be unbundled under this Agreement so that BLC Management can make an independent judgment about whether the Loop is capable of supporting the advanced services equipment BLC Management intends to install and the services BLC Management wishes to provide. LMU is a preordering transaction, distinct from BLC Management ordering any other service(s). Loop Makeup Service Inquiries (LMUSI) and mechanized LMU queries for preordering LMU are likewise unique from other preordering functions with associated SIs as described in this Agreement.

2.9.1.2 AT&T will provide BLC Management LMU information consisting of the composition of the Loop material (copper/fiber); the existence, location and type of equipment on the Loop, including but not limited to digital loop carrier or other remote concentration devices, feeder/distribution interfaces, bridged taps, load coils, pair-gain devices; the Loop length; the wire gauge and electrical parameters.

2.9.1.3 AT&T's LMU information is provided to BLC Management as it exists either in AT&T's databases or in its hard copy facility records. AT&T does not guarantee accuracy or reliability of the LMU information provided.

2.9.1.4 AT&T's provisioning of LMU information to the requesting CLEC for facilities is contingent upon either AT&T or the requesting CLEC controlling the Loop(s) that serve the service location for which LMU information has been requested by the CLEC. The requesting CLEC is not authorized to receive LMU information on a facility used or controlled by another CLEC unless AT&T receives a LOA from the voice CLEC (owner) or its authorized agent on the LMUSI submitted by the requesting CLEC.

2.9.1.5 BLC Management may choose to use equipment that it deems will enable it to provide a certain type and level of service over a particular AT&T Loop as long as that equipment does not disrupt other services on the AT&T network. The determination shall be made solely by BLC Management and AT&T shall not be liable in any way for the performance of the advanced data services provisioned over said Loop. The specific Loop type (e.g., ADSL, HDSL, or otherwise) ordered on the LSR must match the LMU of the Loop reserved taking into consideration any requisite line conditioning. The LMU data is provided for informational purposes only and does not guarantee BLC Management's ability to provide advanced data services over the ordered Loop type. Furthermore, the LMU information for Loops other than copper-only Loops (e.g., ADSL, UCL-ND, etc.) that support xDSL services, is subject to change at any time due to modifications and/or upgrades to AT&T's network. Except as set forth in Section 2.9.1.6 below, copper-only Loops will not be subject to change due to modification and/or upgrades to AT&T's network and will remain on copper facilities until the Loop is disconnected by BLC Management or the customer, or until AT&T retires the copper facilities via the FCC's and any applicable Commission's requirements. BLC Management is fully responsible for any of its service configurations that may differ from AT&T's technical standard for the Loop type ordered.

2.9.1.6 If AT&T retires its copper facilities using 47 C.F.R § 51.325(a) requirements; or is required by a governmental agency or regulatory body to move or replace copper facilities as a maintenance procedure, AT&T will notify BLC Management, according to the applicable network disclosure requirements. It will be BLC Management's responsibility to move any service it may provide over such facilities to alternative facilities. If BLC Management fails to move the service to alternative facilities by the date in the network disclosure notice, AT&T may terminate the service to complete the network change.

2.9.2 Submitting LMUSI

2.9.2.1 BLC Management may obtain LMU information and reserve facilities by submitting a mechanized LMU query or a manual LMUSI according to the terms and conditions as described in the LMU CLEC Information Package, incorporated herein by reference as it may be amended from time to time. The CLEC Information Package is located at the "CLEC UNE Product" on AT&T's Interconnection Web site. After obtaining the Loop information from the mechanized LMU process, if BLC Management needs further Loop information in order to determine Loop service capability, BLC Management may initiate a separate Manual SI for a separate nonrecurring charge as set forth in Exhibit A.

2.9.2.2 All LSRs issued for reserved facilities shall reference the facility reservation number as provided by AT&T. BLC Management will not be billed any additional LMU charges for the Loop ordered on such LSR. If, however, BLC Management does not reserve facilities upon an initial LMUSI, BLC Management's placement of an order for an advanced data service type facility will incur the appropriate billing charges to include SI and reservation per Exhibit A.

2.9.2.3 Where BLC Management has reserved multiple Loop facilities on a single reservation, BLC Management may not specify which facility shall be provisioned when submitting the LSR. For those occasions, AT&T will assign to BLC Management, subject to availability, a facility that meets the AT&T technical standards of the AT&T type Loop as ordered by BLC Management.

2.9.2.4 Charges for preordering manual LMUSI or mechanized LMU are separate from any charges associated with ordering other services from AT&T.

3 Line Splitting

3.1 Line splitting shall mean that a provider of data services (a Data LEC) and a provider of voice services (a Voice CLEC) to deliver voice and data service to customers over the same Loop. The Voice CLEC and Data LEC may be the same or different carriers. AT&T will provide Line Splitting over a Loop (UNE-L) purchased by BLC Management pursuant to this Agreement.

3.2 Line Splitting – UNE-L. In the event BLC Management provides its own switching or obtains switching from a third party, BLC Management may engage in line splitting arrangements with another CLEC using a splitter, provided by BLC Management, in a Collocation Space at the central office where the loop terminates into a distribution frame or its equivalent.

3.3 AT&T must make all necessary network modifications, including providing nondiscriminatory access to OSS necessary for pre-ordering, ordering, provisioning, maintenance and repair, and billing for Loops used in line splitting

arrangements. The Parties may use the Change Control Process to address necessary OSS modifications.

3.4 Provisioning Line Splitting – UNE-L

3.4.1 The Voice CLEC provides the splitter when providing Line Splitting with UNE-L. When BLC Management owns the splitter, Line Splitting requires the following: a loop from NID at the customer's location to the serving wire center and terminating into a distribution frame or its equivalent.

3.4.2 An unloaded 2-wire copper Loop must serve the customer. The meet point for the Voice CLEC and the Data LEC is the point of termination on the MDF for the Data LEC's cable and pairs.

3.4.3 To order Line Splitting utilizing UNE-L on a particular Loop, BLC Management must have a DSLAM collocated in the central office that serves the customer of such Loop.

3.4.4 BLC Management may purchase, install and maintain central office POTS splitters in its collocation arrangements. BLC Management may use such splitters for access to its customers and to provide digital line subscriber services to its customers using the high frequency spectrum of the UNE-L. Existing Collocation rules and procedures and the terms and conditions relating to Collocation set forth in Attachment 4-Central Office shall apply.

3.5 Maintenance – Line Splitting – UNE-L

3.5.1 AT&T will be responsible for repairing voice troubles and the troubles with the physical loop between the NID at the customer's premises and the termination point.

3.5.2 BLC Management shall indemnify, defend and hold harmless AT&T from and against any claims, losses, actions, causes of action, suits, demands, damages, injury, and costs including reasonable attorney fees, which arise out of actions related to the other service provider, except to the extent caused by AT&T's gross negligence or willful misconduct.

3.5.3 For the state of Alabama, the following rights are in addition to the general indemnification rights set forth above:

3.5.3.1 PROVIDED, HOWEVER, that all amounts advanced in respect of such claims, losses and costs shall be repaid to BLC Management by AT&T if it shall ultimately be determined in a final judgment without further appeal by a court of appropriate jurisdiction that AT&T is not entitled to be indemnified for such claims, losses and

costs because the Claims, Losses and Costs arose as a result of AT&T's gross negligence or willful misconduct.

3.5.3.2 AT&T will indemnify, defend and hold harmless BLC Management from and against any Claims, Losses and Costs which arise out of actions related to the other service provider (i.e. CLEC party to the line splitting arrangement who is not BLC Management brought against BLC Management to the extent such Claim alleges that the cause of Claim, Loss and Cost was found to be the result of AT&T's gross negligence or willful misconduct.

3.5.3.3 PROVIDED, HOWEVER, that AT&T shall have no obligation to indemnify BLC Management under this section unless BLC Management provides AT&T with prompt written notice of any such Claim; BLC Management permits AT&T to assume and control the defense to such action, with counsel chosen by AT&T; and AT&T does not enter into any settlement or compromise of such Claim.

3.5.3.4 PROVIDED, HOWEVER, that all amounts advanced in respect of such Claims, Losses and Costs shall be repaid to AT&T by BLC Management if it shall ultimately be determined in a final judgment without further appeal by a court of appropriate jurisdiction that BLC Management is not entitled to be indemnified for such Claims, Losses and Costs because the Claims, Losses and Costs did not arises as a result of AT&T's gross negligence or willful misconduct.

3.5.3.5 Definitions:

3.5.3.5.1 "Claim" means any threatened, pending or completed action, suit or proceeding, or any inquiry or investigation that AT&T or BLC Management in good faith believes might lead to the institution of any such action, suit or proceeding.

3.5.3.5.2 "Loss" means any and all damages, injuries, judgments, fines penalties, amounts paid or payable in settlement, deficiencies, and expenses (including all interest, assessments, and other charges paid or payable in connection with or respect of such Losses) incurred in connection with the Claim.

3.5.3.5.3 "Costs" means all reasonable attorney's fees and all other reasonable fees, expenses and obligations paid or incurred in connection with the Claim or related matters, including without limitation, investigating, defending, or participating (as a party, witness or otherwise) in (including on appeal), or preparing to defend or participate in any Claim.

3.6 <u>Line Splitting – Loop and Port for the states of Georgia and North Carolina only</u>

3.6.1 To the extent BLC Management is using a commingled arrangement that consists of a Loop purchased pursuant to this Agreement and Local Switching provided by AT&T pursuant to Section 271, AT&T will permit BLC Management to utilize

Line Splitting. AT&T shall charge the applicable line splitting rates set forth in Exhibit A of this Agreement.

3.6.2 BLC Management shall provide AT&T with a signed LOA between it and the third party CLEC (Data CLEC or Voice CLEC) with which it desires to provision Line Splitting services, where BLC Management will not provide voice and data services.

3.6.3 Provisioning Line Splitting and Splitter Space – Loop and Port

3.6.3.1 The Data LEC, Voice CLEC, or a third party may provide the splitter. When BLC Management or its authorized agent owns the splitter, Line Splitting requires the following: a non-designed analog Loop from the serving wire center to the NID at the customer's location; a collocation cross-connection connecting the Loop to the collocation space; and a second collocation cross-connection from the collocation space connected to a voice port.

3.6.3.2 An unloaded 2-wire copper Loop must serve the customer. The meet point for the Voice CLEC and the Data CLEC is the point of termination on the MDF for the Data CLEC's cable and pairs.

3.6.4 CLEC Provided Splitter – Line Splitting – Loop and Port

3.6.4.1 BLC Management or its authorized agent may purchase, install and maintain central office line splitters in its collocation arrangements. BLC Management or its authorized agent may use such splitters for access to its customers and to provide digital line subscriber services to its customers using the High Frequency Spectrum. Existing collocation rules and procedures and the terms and conditions relating to collocation set forth in Attachment 4-Central Office shall apply.

3.6.4.2 Any splitters installed by BLC Management or its authorized agent in its collocation arrangement shall comply with ANSI T1.413, Annex E, or any future ANSI splitter standards. BLC Management or its authorized agent may install any splitters that AT&T deploys or permits to be deployed for itself or any AT&T affiliate.

3.6.5 Maintenance – Line Splitting – Loop and Port

3.6.5.1 AT&T will be responsible for repairing troubles with the physical Loop between the NID at the customer's premises and the termination point.

4 Unbundled Network Element Combinations

4.1 For purposes of this Section, references to "Currently Combined" Network Elements shall mean that the particular Network Elements requested by BLC Management are in fact already combined by AT&T in the AT&T network.

References to "Ordinarily Combined" Network Elements shall mean that the particular Network Elements requested by BLC Management are not already combined by AT&T in the location requested by BLC Management but are elements that are typically combined in AT&T's network. References to "Not Typically Combined" Network Elements shall mean that the particular Network Elements requested by BLC Management are not elements that AT&T combines for its use in its network.

4.1.1 Except as otherwise set forth in this Agreement, upon request, AT&T shall perform the functions necessary to combine Network Elements that AT&T is required to provide under this Agreement in any manner, even if those elements are not ordinarily combined in AT&T's network, provided that such Combination is technically feasible and will not undermine the ability of other carriers to obtain access to Network Elements or to interconnect with AT&T's network.

4.1.2 To the extent BLC Management requests a Combination for which AT&T does not have methods and procedures in place to provide such Combination, rates and/or methods or procedures for such Combination will be developed pursuant to the BFR process.

4.2 Rates

4.2.1 The rates for the Currently Combined Network Elements specifically set forth in Exhibit A shall be the rates associated with such Combinations. Where a Currently Combined Combination is not specifically set forth in Exhibit A, the rate for such Currently Combined Combination shall be the sum of the recurring rates for those individual Network Elements as set forth in Exhibit A and/or Exhibit B in addition to the applicable nonrecurring switch-as-is charge set forth in Exhibit A.

4.2.2 The rates for the Ordinarily Combined Network Elements specifically set forth in Exhibit A shall be the nonrecurring and recurring charges for those Combinations. Where an Ordinarily Combined Combination is not specifically set forth in Exhibit A, the rate for such Ordinarily Combined Combination shall be the sum of the recurring rates for those individual Network Elements as set forth in Exhibit A and/or Exhibit B and nonrecurring rates for those individual Network Elements as set forth in Exhibit A.

4.2.3 The rates for Not Typically Combined Combinations shall be developed pursuant to the BFR process upon request of BLC Management.

4.3 Enhanced Extended Links (EELs)

4.3.1 EELs are combinations of Loops and Dedicated Transport as defined in this Attachment, together with any facilities, equipment, or functions necessary to combine those Network Elements. AT&T shall provide BLC Management with

EELs where the underlying Network Element are available and are required to be provided pursuant to this Agreement and in all instances where the requesting carrier meets the eligibility requirements, if applicable.

4.3.2 High-capacity EELs are (1) combinations of Loop and Dedicated Transport, (2) Dedicated Transport commingled with a wholesale loop, or (3) a loop commingled with wholesale transport at the DS1 and/or DS3 level as described in 47 C.F.R. § 51.318(b).

4.3.3 By placing an order for a high-capacity EEL, BLC Management thereby certifies that the service eligibility criteria set forth herein are met for access to a converted high-capacity EEL, a new high-capacity EEL, or part of a high-capacity commingled EEL as a Network Element. AT&T shall have the right to audit BLC Management's high-capacity EELs as specified below.

4.3.4 <u>Service Eligibility Criteria</u>

4.3.4.1 High capacity EELs must comply with the following service eligibility requirements. BLC Management must certify for each high-capacity EEL that all of the following service eligibility criteria are met:

4.3.4.1.1 BLC Management has received state certification to provide local voice service in the area being served;

4.3.4.2 For each combined circuit, including each DS1 circuit, each DS1 EEL, and each DS1-equivalent circuit on a DS3 EEL:

4.3.4.2.1 1) Each circuit to be provided to each customer will be assigned a local number prior to the provision of service over that circuit;

4.3.4.2.2 2) Each DS1-equivalent circuit on a DS3 EEL must have its own local number assignment so that each DS3 must have at least twenty-eight (28) local voice numbers assigned to it;

4.3.4.2.3 3) Each circuit to be provided to each customer will have 911 or E911 capability prior to provision of service over that circuit;

4.3.4.2.4 4) Each circuit to be provided to each customer will terminate in a collocation arrangement that meets the requirements of 47 C.F.R. § 51.318(c);

4.3.4.2.5 5) Each circuit to be provided to each customer will be served by an interconnection trunk over which BLC Management will transmit the calling party's number in connection with calls exchanged over the trunk;

4.3.4.2.6 6) For each twenty-four (24) DS1 EELs or other facilities having equivalent capacity, BLC Management will have at least one (1) active DS1 local service

interconnection trunk over which BLC Management will transmit the calling party's number in connection with calls exchanged over the trunk; and

4.3.4.2.7 7) Each circuit to be provided to each customer will be served by a switch capable of switching local voice traffic.

4.3.4.3 AT&T may, on an annual basis, audit BLC Management's records in order to verify compliance with the qualifying service eligibility criteria. To invoke the audit, AT&T will send a Notice of Audit to BLC Management. Such Notice of Audit will be delivered to BLC Management no less than thirty (30) days prior to the date upon which AT&T seeks to commence an audit.

4.3.4.3.1 Such Notice of Audit to BLC Management shall state AT&T's concern that BLC Management is not complying with the service eligibility requirements as set forth above and a concise statement of the reasons therefor. AT&T is not required to provide documentation, as distinct from a statement of concern, to support its basis for an audit, or seek the concurrence of the requesting carrier before selecting the location of the audit. AT&T may select the independent auditor without the prior approval of BLC Management or the Commission. Challenges to the independence of the auditor may be filed with the Commission only after the audit has been concluded.

4.3.4.3.2 For the state of Alabama, BLC Management may, however, challenge the legal qualifications of the auditor selected by filing an objection to that effect with the Commission within 10 days of receiving AT&T's Notice of Audit.

4.3.4.3.3 For the state of Louisiana, AT&T's notice to BLC Management shall include a listing of the circuits for which AT&T alleges noncompliance, including all supporting documentation and a list of three auditors from which BLC Management may choose one to conduct the audit.

4.3.4.4 The audit shall be conducted by a third party independent auditor, and the audit must be performed in accordance with the standards established by the American Institute for Certified Public Accountants (AICPA) which will require the auditor to perform an "examination engagement" and issue a report regarding BLC Management's compliance with the high capacity EEL eligibility criteria. AICPA standards and other AICPA requirements will be used to determine the independence of an auditor. The independent auditor's report will conclude whether BLC Management complied in all material respects with the applicable service eligibility criteria. Consistent with standard auditing practices, such audits require compliance testing designed by the independent auditor.

4.3.4.5 To the extent the independent auditor's report concludes that BLC Management failed to comply with the service eligibility criteria, BLC Management must true-up any difference in payments, convert all noncompliant circuits to the

appropriate service, and make the correct payments on a going-forward basis. In the event the auditor's report concludes that BLC Management did not comply in any material respect with the service eligibility criteria, BLC Management shall reimburse AT&T for the cost of the independent auditor. To the extent the auditor's report concludes that BLC Management did comply in all material respects with the service eligibility criteria, AT&T will reimburse BLC Management for its reasonable and demonstrable costs associated with the audit. BLC Management will maintain appropriate documentation to support its certifications. The Parties shall provide such reimbursement within thirty (30) days of receipt of a statement of such costs.

4.3.4.5.1 For the state of Alabama, BLC Management will maintain appropriate documentation to support its certifications and may dispute any portion of the findings of an audit by petitioning the Commission for a review within twenty (20) days of receiving the reported findings of the auditor.

4.3.4.6 In the event BLC Management converts special access services to Network Elements, BLC Management shall be subject to the termination liability provisions in the applicable special access tariffs, if any.

5 Dedicated Transport and Dark Fiber Transport

5.1 Dedicated Transport. Dedicated Transport is defined as AT&T's transmission facilities between wire centers or switches owned by AT&T, or between wire centers or switches owned by AT&T and switches owned by BLC Management, including but not limited to DS1, DS3 and OCn level services, as well as dark fiber, dedicated to BLC Management. AT&T shall not be required to provide access to OCn level Dedicated Transport under any circumstances pursuant to this Agreement.

5.2 DS1 and DS3 Dedicated Transport Requirements

5.2.1 For purposes of this Section 5.2, a Business Line is as defined in 47 C.F.R. § 51.5.

5.2.2 Notwithstanding anything to the contrary in this Agreement, AT&T shall make available Dedicated Transport as described in this Agreement, except in any wire center meeting the criteria described below:

5.2.2.1 DS1 Dedicated Transport where both wire centers at the end points of the route contain thirty-eight thousand (38,000) or more Business Lines or four (4) or more fiber-based collocators.

5.2.2.2 DS3 Dedicated Transport where both wire centers at the end points of the route contain twenty-four thousand (24,000) or more Business Lines or three (3) or more fiber-based collocators.

5.2.2.3 The Master List of Unimpaired Wire Centers and AT&T's List of Unimpaired Wire Centers, as described in Section 1.8, sets forth the list of wire centers meeting the criteria set forth in Sections 5.2.2.1 and 5.2.2.2 above as of March 11, 2005.

5.2.2.4 Once a wire center meets or exceeds either of the thresholds set forth in Section 5.2.2.1 above, no future DS1 Dedicated Transport unbundling will be required between that wire center and any other wire center exceeding these same thresholds.

5.2.2.5 Once a wire center meets or exceeds either of the thresholds set forth in Section 5.2.2.2 above, no future DS3 Dedicated Transport will be required between that wire center and any other wire center meeting or exceeding these same thresholds.

5.2.2.6 Modifications and Updates to the Wire Center List and Subsequent Transition Periods

5.2.2.6.1 In the event AT&T identifies additional wire centers that meet the criteria set forth in Sections 5.2.2.1 or 5.2.2.2 above, but that were not included in the Master List of Unimpaired Wire Centers or AT&T's List of Unimpaired Wire Centers, AT&T shall include such additional wire centers in a CNL. Each such list of additional wire centers shall be considered a Subsequent Wire Center List. AT&T will follow any notification procedures set forth in applicable Commission orders.

5.2.2.6.2 BLC Management shall have thirty (30) business days to dispute the additional wire centers listed on AT&T's CNL. Absent such dispute, effective thirty (30) business days after the date of an AT&T CNL providing a Subsequent Wire Center List, AT&T shall not be required to provide DS1 and DS3 Dedicated Transport, as applicable, in such additional wire center(s), except pursuant to the self-certification process as set forth in Section 1.8 of this Attachment.

5.2.2.6.3 For purposes of Section 5.2.2.6 above, AT&T shall make available DS1 and DS3 Dedicated Transport that were in service for BLC Management in a wire center on the Subsequent Wire Center List as of the thirtieth (30th) business day after the date of AT&T's CNL identifying the Subsequent Wire Center List (Subsequent Embedded Base) until one hundred eighty (180) days after the thirtieth (30th) business day from the date of AT&T's CNL identifying the Subsequent Wire Center List (Subsequent Transition Period).

5.2.2.6.4 The rates set forth in Exhibit B shall apply to the Subsequent Embedded Base during the Subsequent Transition Period.

5.2.2.6.5 No later than one hundred eighty (180) days from AT&T's CNL identifying the Subsequent Wire Center List, BLC Management shall submit an LSR(s) or

spreadsheet(s) as applicable, identifying the Subsequent Embedded Base of circuits to be disconnected or converted to other AT&T services.

5.2.2.6.6 In the case of disconnection, the applicable disconnect charges set forth in this Agreement shall apply.

5.2.2.6.6.1 If BLC Management fails to submit the LSR(s) or spreadsheet(s) for all of its Subsequent Embedded Base by one hundred eighty (180) days after the date of AT&T's CNL identifying the Subsequent Wire Center List, AT&T will identify BLC Management's remaining Subsequent Embedded Base, if any, and will transition such circuits to the equivalent tariffed AT&T service(s), or in the case of Georgia, to the equivalent 271 service(s) set forth in Exhibit 1. In the states of Florida, Mississippi and South Carolina, those circuits identified and transitioned by AT&T shall be subject to the applicable disconnect charges as set forth in this Agreement and the full nonrecurring charges for installation of the equivalent tariffed AT&T service as set forth in AT&T's tariffs. In the states of Alabama, Georgia and North Carolina, those circuits identified and transitioned by AT&T shall be subject to the applicable switch-as-is rates set forth in Exhibit A of Attachment 2. For the state of Louisiana, those circuits identified and transitioned by AT&T shall be subject to the applicable switch-as-is rates set forth in AT&T's tariffs.

5.2.2.6.7 For Subsequent Embedded Base circuits converted pursuant to Section 5.2.2.6.5 above or transitioned pursuant to Section 5.2.2.6.6.1 above, the applicable recurring tariff charges shall apply as of the earlier of the date each circuit is converted or transitioned, as applicable, or the first day after the end of the Subsequent Transition Period.

5.2.3 AT&T shall:

5.2.4 Provide BLC Management exclusive use of Dedicated Transport to a particular customer or carrier;

5.2.5 Provide all technically feasible features, functions, and capabilities of Dedicated Transport as outlined within the technical requirements of this section;

5.2.6 Permit, to the extent technically feasible, BLC Management to connect Dedicated Transport to equipment designated by BLC Management, including but not limited to, BLC Management's collocated facilities; and

5.2.7 Permit, to the extent technically feasible, BLC Management to obtain the functionality provided by AT&T's digital cross-connect systems.

5.3 AT&T shall offer Dedicated Transport:

5.3.1 As capacity on a shared facility; and

5.3.2 As a circuit (i.e., DS0, DS1, DS3, STS-1) dedicated to BLC Management.

5.4 Dedicated Transport may be provided over facilities such as optical fiber, copper twisted pair, and coaxial cable, and shall include transmission equipment such as line terminating equipment, amplifiers, and regenerators.

5.5 BLC Management may obtain a maximum of twelve (12) unbundled DS3 Dedicated Transport circuits on each Route where DS3 Dedicated Transport is available as a Network Element, and a maximum of ten (10) unbundled DS1 Dedicated Transport circuits on each Route where there is no 251(c)(3) unbundling obligation for DS3 Dedicated Transport, but for which impairment exists for DS1 Dedicated Transport. For purposes of this Section 5, a "Route" is defined in 47 C.F.R. § 51.319 (e) as a transmission path between one of an incumbent LEC's wire centers or switches and another of the incumbent LECs wire centers or switches. A route between two (2) points (e.g. wire center or switch "A" and wire center or switch "Z") may pass through one or more intermediate wire centers or switches (e.g. wire center or switch "X"). Transmission paths between the same end points (e.g. wire center or switch "A" and wire center or switch "Z") are the same "route", irrespective of whether they pass through the same intermediate wire centers or switches, if any.

5.6 Technical Requirements

5.6.1 AT&T shall offer DS0 equivalent interface transmission rates for DS0 or voice grade Dedicated Transport. For DS1 or DS3 circuits, Dedicated Transport shall at a minimum meet the performance, availability, jitter, and delay requirements specified for Customer Interface to Central Office (CI to CO) connections in the applicable industry standards.

5.6.2 AT&T shall offer the following interface transmission rates for Dedicated Transport:

5.6.2.1 DS0 Equivalent;

5.6.2.2 DS1;

5.6.2.3 DS3;

5.6.2.4 STS-1; and

5.6.2.5 SDH (Synchronous Digital Hierarchy) Standard interface rates are in accordance with International Telecommunications Union (ITU) Recommendation G.707 and Plesiochronous Digital Hierarchy (PDH) rates per ITU Recommendation G.704.

5.6.3 AT&T shall design Dedicated Transport according to its network infrastructure. BLC Management shall specify the termination points for Dedicated Transport.

5.6.4 At a minimum, Dedicated Transport shall meet each of the requirements set forth in the applicable industry technical references and AT&T Technical References;

5.6.4.1 Telcordia TR-TSY-000191 Alarm Indication Signals Requirements and Objectives, Issue 1, May 1986.

5.6.4.2 AT&T's TR73501 LightGate®Service Interface and Performance Specifications, Issue D, June 1995.

5.6.4.3 AT&T's TR73525 MegaLink®Service, MegaLink Channel Service and MegaLink Plus Service Interface and Performance Specifications, Issue C, May 1996.

5.7 Unbundled Channelization (Multiplexing)

5.7.1 To the extent BLC Management is purchasing DS1 or DS3 or STS-1 Dedicated Transport pursuant to this Agreement, Unbundled Channelization (UC) provides the optional multiplexing capability that will allow a DS1 (1.544 Mbps) or DS3 (44.736 Mbps) or STS-1 (51.84 Mbps) Network Elements to be multiplexed or channelized at an AT&T central office. Channelization can be accomplished through the use of a multiplexer or a digital cross-connect system at the discretion of AT&T. Once UC has been installed, BLC Management may request channel activation on a channelized facility and AT&T shall connect the requested facilities via COCIs. The COCI must be compatible with the lower capacity facility and ordered with the lower capacity facility. This service is available as defined in NECA 4.

5.7.2 AT&T shall make available the following channelization systems and interfaces:

5.7.2.1 DS1 Channelization System: channelizes a DS1 signal into a maximum of twenty-four (24) DS0s. The following COCI are available: Voice Grade, Digital Data and ISDN.

5.7.2.2 DS3 Channelization System: channelizes a DS3 signal into a maximum of twenty-eight (28) DS1s. A DS1 COCI is available with this system.

5.7.2.3 STS-1 Channelization System: channelizes a STS-1 signal into a maximum of twenty-eight (28) DS1s. A DS1 COCI is available with this system.

5.7.3 Technical Requirements. In order to assure proper operation with AT&T provided central office multiplexing functionality, BLC Management's channelization equipment must adhere strictly to form and protocol standards. BLC Management must also adhere to such applicable industry standards for the

multiplex channel bank, for voice frequency encoding, for various signaling schemes, and for sub rate digital access.

5.8 Dark Fiber Transport. Dark Fiber Transport is defined as Dedicated Transport that consists of unactivated optical interoffice transmission facilities without attached signal regeneration, multiplexing, aggregation or other electronics.

5.8.1 Dark Fiber Transport Requirements

5.8.1.1 For purposes of this Section 5.8, a Business Line is as defined in 47 C.F.R. § 51.5.

5.8.1.2 Notwithstanding anything to the contrary in this Agreement, AT&T shall make available Dark Fiber Transport as described in this Agreement, except in any wire center meeting the criteria described below:

5.8.1.2.1 Dark Fiber Transport where both wire centers at the end points of the route contain twenty-four thousand (24,000) or more Business Lines or three (3) or more fiber-based collocators.

5.8.1.3 The Master List of Unimpaired Wire Centers or AT&T's List of Unimpaired Wire Centers, as described in Section 1.8, sets forth the list of wire centers meeting the criteria set forth in Section 5.8.1.2.1 above as of March 11, 2005.

5.8.1.4 Once any wire center exceeds either of the thresholds set forth in Section 5.8.1.2.1 above, no future Dark Fiber Transport unbundling will be required in that wire center.

5.8.1.5 Modifications and Updates to the Wire Center List and Subsequent Transition Periods

5.8.1.5.1 In the event AT&T identifies additional wire centers that meet the criteria set forth in Section 5.8.1.2.1 above, but that were not included in the Master List of Unimpaired Wire Centers or AT&T's List of Unimpaired Wire Centers, AT&T shall include such additional wire centers in a CNL. Each such list of additional wire centers shall be considered a "Subsequent Wire Center List". AT&T will follow any notification procedures in applicable Commission orders.

5.8.1.5.2 BLC Management shall have thirty (30) business days to dispute the additional wire centers listed on AT&T's CNL. Absent such dispute, effective thirty (30) business days after the date of an AT&T CNL providing a Subsequent Wire Center List, AT&T shall not be required to provide unbundled access to Dark Fiber Transport, as applicable, in such additional wire center(s), except pursuant to the self-certification process as set forth in Section 1.8 of this Attachment.

5.8.1.5.3 For purposes of Section 5.8.1.5 above, AT&T shall make available Dark Fiber Transport that was in service for BLC Management in a wire center on the

Subsequent Wire Center List as of the thirtieth (30) business day after the date of AT&T's CNL identifying the Subsequent Wire Center List (Subsequent Embedded Base) until one hundred eighty (180) days after the thirtieth (30th) business day from the date of AT&T's CNL identifying the Subsequent Wire Center List (Subsequent Transition Period).

5.8.1.5.4 The rates set forth in Exhibit B shall apply to the Subsequent Embedded Base during the Subsequent Transition Period.

5.8.1.5.5 No later than one hundred eighty (180) days from AT&T's CNL identifying the Subsequent Wire Center List, BLC Management shall submit an LSR(s) or spreadsheet(s) as applicable, identifying the Subsequent Embedded Base of circuits to be disconnected or converted to other AT&T services.

5.8.1.5.6 In the case of disconnection, the applicable disconnect charges set forth in this Agreement shall apply.

5.8.1.5.6.1 If BLC Management fails to submit the LSR(s) or spreadsheet(s) for all of its Subsequent Embedded Base by one hundred eighty (180) days after the date of AT&T's CNL identifying the Subsequent Wire Center List, AT&T will identify BLC Management's remaining Subsequent Embedded Base, if any, and will transition such circuits to the equivalent tariffed AT&T service(s), or in the case of Georgia, to the equivalent 271 service set forth in Exhibit 1.

5.8.1.5.6.2 In the states of Florida, Mississippi and South Carolina, those circuits identified and transitioned by AT&T shall be subject to the applicable disconnect charges as set forth in this Agreement and the full nonrecurring charges for installation of the equivalent tariffed AT&T service as set forth in AT&T's tariffs. In the states of Alabama, Georgia and South Carolina, those circuits identified and transitioned by AT&T shall be subject to the applicable switch-as-is rates set forth in Exhibit A of Attachment 2. In the state of Louisiana, those circuits identified and transitioned by AT&T shall be subject to the full nonrecurring charges for installation of the equivalent tariffed AT&T service as set forth in AT&T's tariffs.

5.8.1.5.6.3 For Subsequent Embedded Base circuits converted pursuant to Section 5.8.1.5.5 above or transitioned pursuant to Section 5.8.1.5.6.1 above, the applicable recurring tariff charges shall apply as of the earlier of the date each circuit is converted or transitioned, as applicable, or the first day after the end of the Subsequent Transition Period.

5.9 <u>Rearrangements</u>

5.9.1 A request to move a working BLC Management Dedicated Transport circuit or a Combination including Dedicated Transport from one connecting facility assignment (CFA) to another CFA in the same AT&T Central Office (Change in

CFA), shall not constitute the establishment of new service. The applicable Rearrangement rates for the Change in CFA are set forth in Exhibit A.

5.9.2 A request to reterminate one end of a Dedicated Transport facility that is not a Change in CFA and thus results in retermination in a different AT&T Central Office (Retermination) shall constitute disconnection of existing service and the establishment of new service. Disconnect charges and full nonrecurring charges for establishment of service, as set forth in Exhibit A, shall apply.

5.9.3 Upon request of BLC Management, AT&T shall project manage the Change in CFA or Retermination of Dedicated Transport and Combinations that include Dedicated Transport as described in Sections 5.9.1 and 5.9.2 above and BLC Management may request OC-TS for such orders.

5.9.4 AT&T shall accept a LOA between BLC Management and another carrier that will allow BLC Management, in connection with a Change in CFA or Retermination, to connect Dedicated Transport or a Combination that includes Dedicated Transport, via a CFA, to the other carrier's collocation space or to another carrier's Multiplexer.

6 Automatic Location Identification/Data Management System (ALI/DMS)

6.1 911 and E911 Databases

6.1.1 AT&T shall provide BLC Management with nondiscriminatory access to 911 and E911 databases on an unbundled basis, in accordance with 47 C.F.R. § 51.319 (f).

6.1.2 The ALI/DMS database contains end user information (including name, address, telephone information, and sometimes special information from the local service provider or end user) used to determine to which PSAP to route the call. The ALI/DMS database is used to provide enhanced routing flexibility for E911. BLC Management will be required to provide the AT&T 911 database vendor daily service order updates to E911 database in accordance with Section 6.2.1 below.

6.2 Technical Requirements

6.2.1 AT&T's 911 database vendor shall provide BLC Management the capability of providing updates to the ALI/DMS database through a specified electronic interface. BLC Management shall contact AT&T's 911 database vendor directly to request interface. BLC Management shall provide updates directly to AT&T's 911 database vendor on a daily basis. Updates shall be the responsibility of BLC Management and AT&T shall not be liable for the transactions between BLC Management and AT&T's 911 database vendor.

6.2.2 It is BLC Management's responsibility to retrieve and confirm statistical data and to correct errors obtained from AT&T's 911 database vendor on a daily basis. All errors will be assigned a unique error code and the description of the error and the corrective action is described in the CLEC Users Guide for Facility Based Providers that is found on the AT&T Interconnection Web site.

6.2.3 BLC Management shall conform to the AT&T standards as described in the CLEC Users Guide to E911 for Facilities Based Providers that is located on the AT&T Interconnection Web site.

6.2.4 Stranded Unlocks are defined as end user records in AT&T's ALI/DMS database that have not been migrated for over ninety (90) days to BLC Management, as a new provider of local service to the end user. Stranded Unlocks are those end user records that have been "unlocked" by the previous local exchange carrier that provided service to the end user and are open for BLC Management to assume responsibility for such records.

6.2.4.1 Based upon end user record ownership information available in the NPAC database, AT&T shall provide a Stranded Unlock annual report to BLC Management that reflects all Stranded Unlocks that remain in the ALI/DMS database for over ninety (90) days. BLC Management shall review the Stranded Unlock report, identify its end user records and request to either delete such records or migrate the records to BLC Management within two (2) months following the date of the Stranded Unlock report provided by AT&T. BLC Management shall reimburse AT&T for any charges AT&T's database vendor imposes on AT&T for the deletion of BLC Management's records.

6.3 <u>911 PBX Locate Service®.</u> 911 PBX Locate Service is comprised of a database capability and a separate transport component.

6.3.1 <u>Description of Product.</u> The transport component provides a dedicated trunk path from a Private Branch Exchange (PBX) switch to the appropriate AT&T 911 tandem.

6.3.1.1 The database capability allows BLC Management to offer an E911 service to its PBX end users that identifies to the PSAP the physical location of the BLC Management PBX 911 end user station telephone number for the 911 call that is placed by the end user.

6.3.2 BLC Management may order either the database capability or the transport component as desired or BLC Management may order both components of the service.

6.3.3 <u>911 PBX Locate Database Capability.</u> BLC Management's end user or BLC Management's end user's database management agent (DMA) must provide the

end user PBX station telephone numbers and corresponding address and location data to AT&T's 911 database vendor. The data will be loaded and maintained in AT&T's ALI database.

6.3.4 Ordering, provisioning, testing and maintenance shall be provided by BLC Management pursuant to the 911 PBX Locate Marketing Service Description (MSD) that is located on the AT&T Interconnection Web site.

6.3.5 BLC Management's end user, or BLC Management's end user DMA must provide ongoing updates to AT&T's 911 database vendor within a commercially reasonable timeframe of all PBX station telephone number adds, moves and deletions. It will be the responsibility of BLC Management to ensure that the end user or DMA maintain the data pertaining to each end user's extension managed by the 911 PBX Locate Service product. BLC Management should not submit telephone number updates for specific PBX station telephone numbers that are submitted by BLC Management's end user, or BLC Management's end user DMA under the terms of 911 PBX Locate product.

6.3.5.1 BLC Management must provision all PBX station numbers in the same LATA as the E911 tandem.

6.3.6 BLC Management agrees to release, indemnify, defend and hold harmless AT&T from any and all loss, claims, demands, suits, or other action, or any liability whatsoever, whether suffered, made, instituted or asserted by BLC Management's end user or by any other party or person, for any personal injury to or death of any person or persons, or for any loss, damage or destruction of any property, whether owned by BLC Management or others, or for any infringement or invasion of the right of privacy of any person or persons, caused or claimed to have been caused, directly or indirectly, by the installation, operation, failure to operate, maintenance, removal, presence, condition, location or use of PBX Locate Service features or by any services which are or may be furnished by AT&T in connection therewith, including but not limited to the identification of the telephone number, address or name associated with the telephone used by the party or parties accessing 911 services using 911 PBX Locate Service hereunder, except to the extent caused by AT&T's gross negligence or wilful misconduct. BLC Management is responsible for assuring that its authorized end users comply with the provisions of these terms and that unauthorized persons do not gain access to or use the 911 PBX Locate Service through user names, passwords, or other identifiers assigned to BLC Management's end user or DMA pursuant to these terms. Specifically, BLC Management's end user or DMA must keep and protect from use by any unauthorized individual identifiers, passwords, and any other security token(s) and devices that are provided for access to this product.

6.3.7 BLC Management may only use AT&T PBX Locate Service solely for the purpose of validating and correcting 911 related data for BLC Management's end users' telephone numbers for which it has direct management authority.

6.3.8 911 PBX Locate Transport Component. The 911 PBX Locate Service transport component requires BLC Management to order a CAMA type dedicated trunk from BLC Management's end user premise to the appropriate AT&T 911 tandem pursuant to the following provisions.

6.3.8.1 Except as otherwise set forth below, a minimum of two (2) end user specific, dedicated 911 trunks are required between the BLC Management's end user premise and the AT&T 911 tandem as described in AT&T's TR 73576 and in accordance with the 911 PBX Locate Marketing Service Description located on the AT&T Interconnection Web site. BLC Management is responsible for connectivity between the end user's PBX and BLC Management's switch or POP location. BLC Management will then order 911 trunks from their switch or POP location to the AT&T 911 tandem. The dedicated trunks shall be, at a minimum, DS0 level trunks configured as part of a digital interface (delivered over a BLC Management purchased DS1 facility that hands off at a DS1 or higher level digital or optical interface). BLC Management is responsible for ensuring that the PBX switch is capable of sending the calling station's Direct Inward Dial (DID) telephone number to the AT&T 911 tandem in a specified Multi-frequency (MF) Address Signaling Protocol. If the PBX switch supports Primary Rate ISDN (PRI) and the calling stations are DID numbers, then the 911 call can be transmitted using PRI, and there will be no requirement for the PBX Locate Transport component.

6.3.9 Ordering and Provisioning. BLC Management will submit an Access Service Request (ASR) to AT&T to order a minimum of two (2) end user specific 911 trunks from its switch or POP location to the AT&T 911 tandem.

6.3.9.1 Testing and maintenance shall be provided by BLC Management pursuant to the 911 PBX Locate Marketing Service description that is located on the AT&T Interconnection Web site.

6.3.10 Rates. Rates for the 911 PBX Locate Service database component are set forth in Exhibit A. Trunks and facilities for 911 PBX Locate transport component may be ordered by BLC Management pursuant to the terms and conditions set forth in Attachment 3.

7 White Pages Listings

7.1 AT&T shall provide BLC Management and its customers access to white pages directory listings under the following terms:

7.1.1 Listings. BLC Management shall provide all new, changed and deleted listings on a timely basis and AT&T or its agent will include BLC Management residential and business customer listings in the appropriate White Pages (residential and business) or alphabetical directories in the geographic areas covered by this Agreement. Directory listings will make no distinction between BLC Management and AT&T customers. BLC Management shall provide listing information in accordance with the procedures set forth in The AT&T Business Rules for Local Ordering found at AT&T's Interconnection Services Web site.

7.1.2 Unlisted/Non-Published Customers. BLC Management will be required to provide to AT&T the names, addresses and telephone numbers of all BLC Management customers who wish to be omitted from directories. Unlisted/Non-Published listings will be subject to the rates as set forth in AT&T's GSST and shall not be subject to wholesale discount.

7.1.3 Inclusion of BLC Management Customers in Directory Assistance Database. AT&T will include and maintain BLC Management customer listings in AT&T's DA databases. BLC Management shall provide such Directory Assistance listings to AT&T at no charge.

7.1.4 Listing Information Confidentiality. AT&T will afford BLC Management's directory listing information the same level of confidentiality that AT&T affords its own directory listing information.

7.1.5 Additional and Designer Listings. Additional and designer listings will be offered by AT&T at tariffed rates as set forth in AT&T's GSST and shall not be subject to the wholesale discount.

7.1.6 Rates. So long as BLC Management provides listing information to AT&T as set forth in Section 7.1.2 above, AT&T shall provide to BLC Management one (1) basic White Pages directory listing per BLC Management customer at no charge other than applicable service order charges as set forth in AT&T's tariffs. Except in the case of a LSR submitted solely to port a number from AT&T, if such listing is requested on the initial LSR associated with the request for services, a single manual service order charge or electronic service order charge, as appropriate, as described in Attachment 6, will apply to both the request for service and the request for the directory listing. Where a subsequent LSR is placed solely to request a directory listing, or is placed to port a number and request a directory listing, separate service order charges as set forth in AT&T's tariffs shall apply, as well as the manual service order charge or the electronic service order charge, as appropriate, as described in Attachment 6.

7.2 Directories. AT&T or its agent shall make available White Pages directories to BLC Management customer at no charge or as specified in a separate agreement between BLC Management and AT&T's agent.

7.3 Procedures for submitting BLC Management Subscriber Listing Information (SLI) are found in The AT&T Business Rules for Local Ordering found at AT&T's Interconnection Services Web site.

7.3.1 BLC Management authorizes AT&T to release all BLC Management SLI provided to AT&T by BLC Management to qualifying third parties. Such BLC Management SLI shall be intermingled with AT&T's own customer listings and listings of any other CLEC that has authorized a similar release of SLI.

7.3.2 No compensation shall be paid to BLC Management for AT&T's receipt of BLC Management SLI, or for the subsequent release to third parties of such SLI. In addition, to the extent AT&T incurs costs to modify its systems to enable the release of BLC Management's SLI, or costs on an ongoing basis to administer the release of BLC Management SLI, BLC Management shall pay to AT&T its proportionate share of the reasonable costs associated therewith. At any time that costs may be incurred to administer the release of BLC Management's SLI, BLC Management will be notified. If BLC Management does not wish to pay its proportionate share of these reasonable costs, BLC Management may instruct AT&T that it does not wish to release its SLI to independent publishers, and BLC Management shall amend this Agreement accordingly. BLC Management will be liable for all costs incurred until the effective date of the agreement.

7.3.3 Neither AT&T nor any agent shall be liable for the content or accuracy of any SLI provided by BLC Management under this Agreement. BLC Management shall indemnify, except to the extent caused by AT&T's gross negligence or willful misconduct, hold harmless and defend AT&T and its agents from and against any damages, losses, liabilities, demands, claims, suits, judgments, costs and expenses (including but not limited to reasonable attorneys' fees and expenses) arising from AT&T's tariff obligations or otherwise and resulting from or arising out of any third party's claim of inaccurate BLC Management listings or use of the SLI provided pursuant to this Agreement. AT&T may forward to BLC Management any complaints received by AT&T relating to the accuracy or quality of BLC Management listings.

7.3.4 Listings and subsequent updates will be released consistent with AT&T system changes and/or update scheduling requirements.

Georgia 271 Requirements

1. This Exhibit sets forth terms and conditions for de-listed network elements that AT&T is required to offer pursuant to the Georgia Public Service Commission's Order in Docket No. 19341-U ("Order") to BLC Management for BLC Management's provision of Telecommunications Services in accordance with its obligations under Section 271 of the Act ("271").

1.1 To the extent DS1 and/or DS3 Loops, DS1 and/or DS3 Dedicated Transport and Multiplexing are unavailable as a UNE pursuant to this Agreement, these services will be made available by AT&T pursuant to Section 271 of the Act on the same terms and conditions set forth elsewhere in the Agreement, except as otherwise provided in this Exhibit 1, and at the rates set forth in Exhibit B to this Agreement. Notwithstanding the foregoing, the Parties agree that those provisions applicable to DS1 and DS3 Loops or DS1 and DS3 transport provided pursuant to Section 251 of the Act relating to transition of Embedded Base circuits, limitations on the number of circuits available at a particular location or Building, and limitations relating to use for mobile and long distance service shall not apply to the equivalent services available pursuant to this Exhibit 1.

1.2 For information regarding Ordering Guidelines and Processes for 271 elements in the state of Georgia, BLC Management should refer to the Guides section of AT&T's Interconnection Web site.

2. 271 Dark Fiber Loops, 271 DS1 and DS3 Entrance Facilities, and 271 Dark Fiber Transport Facilities are unavailable pursuant to this Agreement and, but are available at the rates, terms, and conditions set forth in the applicable AT&T tariff.

2.1 Under no circumstance shall AT&T be required to (1) combine 271 elements with other 271 elements offered pursuant to this Exhibit, or (2) 271 elements combined with tariffed services or other wholesale services provided by AT&T. Additionally, AT&T shall not be required to commingle or combine 271 elements offered pursuant to this Exhibit with tariffed services. Further, under no circumstance shall AT&T be required to convert 271 elements offered pursuant to this Agreement to equivalent tariffed services, or to convert tariffed services to 271 elements offered pursuant to this Agreement.

3. Line Sharing

3.1 General. Line Sharing is defined as the process by which BLC Management provides digital subscriber line service ("xDSL") over the same copper Loop that AT&T uses to provide retail voice service, with AT&T using the low frequency portion of the Loop and BLC Management using the high frequency spectrum (as defined below) of the Loop.

3.2 Line Sharing arrangements in service as of October 1, 2003 will be billed at the rates set forth in the Parties' Amendment to the Agreement to implement the Georgia Public Service Commission's Letter Order dated March 2, 2006 in Docket No. 14361-U.

3.3 For Line Sharing arrangements placed in service between October 2, 2003, and October 1, 2004 the rates will be as set forth in the Parties' Amendment to the Agreement to implement the Georgia Public Service Commission's Letter Order dated March 2, 2006 in Docket No. 14361-U.

3.4 For Line Sharing arrangements placed on or after October 2, 2004 (whether under this Agreement only, or under this Agreement and a prior Agreement), the rates will be the full copper loop rate as set forth in the Parties' Amendment to the Agreement to implement the Georgia Public Service Commission's Letter Order dated March 2, 2006 in Docket No. 14361-U.

3.5 As of October 2, 2006, the rates for Line Sharing arrangements shall be as set forth in Exhibit B to this Amendment.

3.6 The High Frequency Spectrum is defined as the frequency range above the voiceband on a copper Loop facility carrying analog circuit-switched voiceband transmissions. Access to the High Frequency Spectrum is intended to allow BLC Management the ability to provide xDSL data services to the End User for which AT&T provides voice services.

3.7 The High Frequency Spectrum shall be available for any version of xDSL complying with Spectrum Management Class 5 of ANSI TI.417, American National Standard for Telecommunications, Spectrum Management for Loop Transmission Systems. AT&T will continue to have access to the low frequency portion of the Loop spectrum (from 300 Hertz to at least 3000 Hertz, and potentially up to 3400 Hertz, depending on equipment and facilities) for the purposes of providing voice service. BLC Management shall only use xDSL technology that is within the PSD mask for Spectrum Management Class 5 as found in the abovementioned document.

3.8 Access to the High Frequency Spectrum requires an unloaded, 2-wire copper Loop. An unloaded Loop is a copper Loop with no load coils, lowpass filters, range extenders, DAMLs, or similar devices and minimal bridged taps consistent with ANSI T1.413 and TI .601.

3.9 AT&T will provide Loop Modification to BLC Management on an existing Loop for Line Sharing in accordance with procedures as specified in Attachment 2 of this Agreement. AT&T is not required to modify a Loop for access to the High Frequency spectrum if modification of that Loop significantly degrades AT&T's voice service. If BLC Management requests that AT&T modify a Loop and such modification significantly degrades the voice services on the Loop, BLC Management shall pay for the Loop to be restored to its original state.

3.10 Line Sharing shall only be available on Loops on which AT&T is also providing, and continues to provide, analog voice service directly to the End User. In the event the End User terminates its AT&T provided voice service for any reason, or in the event AT&T disconnects the End User's voice service pursuant to its tariffs or applicable law, and BLC Management desires to continue providing xDSL service on such Loop, BLC Management or the new voice provider, or both, shall be required to purchase a full stand-alone Loop. In those cases in which AT&T no longer provides voice service to the End User and BLC Management purchases the full stand-alone Loop, BLC Management may elect the type of Loop it will purchase. BLC Management will pay the appropriate recurring and nonrecurring rates for such Loop as set forth in the Parties' Amendment to the Agreement to implement the Georgia Public Service Commission's Letter Order dated March 2, 2006 in Docket No. 14361-U. In the event BLC Management purchases a voice grade Loop, BLC Management acknowledges that such Loop may not remain xDSL compatible.

3.11 Only one CLEC shall be permitted access to the High Frequency Spectrum of any particular Loop.

3.12 <u>Provisioning of Line Sharing and Splitter Space.</u> AT&T will provide BLC Management with access to the High Frequency Spectrum as follows:

3.12.1 To order High Frequency Spectrum on a particular Loop, BLC Management must have a Digital Subscriber Line Access Multiplexer (DSLAM) collocated in the central office that serves the End User of such Loop.

3.12.2 BLC Management may provide its own splitters or may order splitters in a central office once it has installed its DSLAM in that central office. AT&T will install splitters within thirty-six (36) calendar days of BLC

Management's submission of an error free Line Splitter Ordering Document (LSOD) to the AT&T Complex Resale Support Group.

3.12.3 Once a splitter is installed on behalf of BLC Management in a central office in which BLC Management is located, BLC Management shall be entitled to order the High Frequency Spectrum on lines served out of that central office. AT&T will bill and BLC Management shall pay the electronic or manual ordering charges, as set forth in Exhibit A of Attachment 2 of the Agreement, as applicable when BLC Management orders High Frequency Spectrum for End User service.

3.12.4 Once AT&T has placed cross-connects on behalf of BLC Management to provide BLC Management access to the High Frequency Spectrum and chooses to rearrange its splitter or CLEC pairs, BLC Management may order the rearrangement of its splitter or cable pairs via "Subsequent Activity". Subsequent Activity is any rearrangement of BLC Management's cable pairs or splitter ports after AT&T has placed cross-connection to provide BLC Management access to the High Frequency Spectrum. AT&T shall bill and BLC Management shall pay the Subsequent Activity charges as set forth in Exhibit B of this Amendment.

3.13 AT&T Provided Splitter – Line Sharing. AT&T will select, purchase, install, and maintain a central office POTS splitter and provide BLC Management access to data ports on the splitter. The splitter will route the High Frequency Spectrum on the circuit to BLC Management's xDSL equipment in BLC Management's collocation space. At least thirty (30) calendar days before making a change in splitter suppliers, AT&T will provide BLC Management with a carrier notification letter, informing BLC Management of change. BLC Management shall purchase ports on the splitter in increments of eight (8), twenty-four (24), or ninety-six (96) ports.

3.14 AT&T will install the splitter in (i) a common area close to BLC Management's collocation area, if possible; or (ii) in a AT&T relay rack as close to BLC Management's DS0 termination point as possible. For purposes of this section, a common area is defined as an area in the central office in which both Parties have access to a common test access point. A Termination Point is defined as the point of termination for BLC Management on the main distributing frame in the central office and is not the demarcation point set forth in Attachment 4 of this Agreement. AT&T will cross-connect the splitter data ports to a specified BLC Management DS0 at such time that a BLC Management End User's service is established.

3.15 CLEC Provided Splitter – Line Sharing. BLC Management may at its option purchase, install and maintain central office POTS splitters in its collocation arrangements. BLC Management may use such splitters to provide xDSL services to its End Users using the High Frequency Spectrum. Existing Collocation rules and procedures and the terms and conditions relating to Collocation set forth in Attachment 4-Central Office shall apply.

3.16 Any splitters installed by BLC Management in its collocation arrangement shall comply with ANSI T1.413, Annex E, or any future ANSI splitter Standards. BLC Management may install any splitters that AT&T deploys or permits to be deployed for itself or any AT&T affiliate.

3.17 Ordering – Line Sharing. BLC Management shall use AT&T's LSOD to order splitters from AT&T and to activate and deactivate DS0 Collocation Connecting Facility Assignments (CFA) for use with High Frequency Spectrum.

3.18 AT&T's Local Ordering Handbook (LOH) will provide BLC Management the LSR format to be used when ordering disconnections of the High Frequency Spectrum or Subsequent Activity.

3.19 AT&T will provision High Frequency Spectrum in compliance with AT&T's Products and Services Interval Guide available at AT&T's Interconnection Web site.

3.20 AT&T shall test the data portion of the Loop to ensure the continuity of the wiring for BLC Management's data.

3.21 AT&T will provide BLC Management access to Preordering LMU in accordance with the terms of this Agreement. AT&T shall bill and BLC Management shall pay the rates for such services, as described in Exhibit B of this Amendment.

3.22 Maintenance and Repair - Line Sharing. BLC Management shall have access for repair and maintenance purposes to any Loop for which it has access to the High Frequency Spectrum. BLC Management may test from the collocation space, the Termination Point, or the NID. AT&T will be responsible for repairing voice services and the physical line between the NID at the End User's premises and the Termination Point. BLC Management will be responsible for repairing its data services. Each Party will be responsible for maintaining its own equipment.

3.23 BLC Management shall inform its End Users to direct data problems to BLC Management, unless both voice and data services are impaired, in

which event BLC Management should direct the End Users to contact AT&T. Once a Party has isolated a trouble to the other Party's portion of the Loop, the Party isolating the trouble shall notify the End User that the trouble is on the other Party's portion of the Loop.

3.24 If BLC Management reports a trouble on the High Frequency Spectrum of a Loop and no trouble actually exists on the AT&T portion, or AT&T isolates the trouble to the physical collocation arrangement belonging to BLC Management, AT&T will charge BLC Management for any dispatching and testing (both inside and outside the CO) required by AT&T in order to confirm the working status. The rates charged for no trouble found (NTF) shall be as set forth in Exhibit B of this Amendment.

UNBUNDLED NETWORK ELEMENTS - Alabama

Att: 2 Exh: A

CATEGORY	RATE ELEMENTS	Interim	Zone	BCS	USOC	RATES($) Rec	Nonrecurring First	Nonrecurring Add'l	Nonrecurring Disconnect First	Nonrecurring Disconnect Add'l	Svc Order Submitted Elec per LSR	Svc Order Submitted Manually per LSR	Incremental Charge - Manual Svc Order vs. Electronic- 1st	Incremental Charge - Manual Svc Order vs. Electronic- Add'l	Incremental Charge - Manual Svc Order vs. Electronic- Disc 1st	Incremental Charge - Manual Svc Order vs. Electronic- Disc Add'l
											OSS Rates($)					
							First	Add'l	First	Add'l	SOMEC	SOMAN	SOMAN	SOMAN	SOMAN	SOMAN
	The "Zone" shown in the sections for stand-alone loops or loops as part of a combination refers to Geographically Deaveraged UNE Zones. To view Geographically Deaveraged UNE Zone Designations by Central Office, refer to internet Website: http://www.interconnection.bellsouth.com/become_a_clec/html/interconnection.htm															
OPERATIONS SUPPORT SYSTEMS (OSS) - "REGIONAL RATES"																
	NOTE: (1) CLEC should contact its contract negotiator if it prefers the "state specific" OSS charges as ordered by the State Commissions. The OSS charges currently contained in this rate exhibit are the AT&T "regional" service ordering charges. CLEC may elect either the state specific Commission ordered rates for the service ordering charges, or CLEC may elect the regional service ordering charge, however, CLEC can not obtain a mixture of the two regardless if CLEC has a interconnection contract established in each of the 9 states.															
	NOTE: (2) Any element that can be ordered electronically will be billed according to the SOMEC rate listed in this category. Please refer to AT&T's Local Ordering Handbook (LOH) to determine if a product can be ordered electronically. For those elements that cannot be ordered electronically at present per the LOH, the listed SOMEC rate in this category reflects the charge that would be billed to a CLEC once electronic ordering capabilities come on-line for that element. Otherwise, the manual ordering charge, SOMAN, will be applied to a CLECs bill when it submits an LSR to AT&T.															
	OSS - Electronic Service Order Charge, Per Local Service Request (LSR) - UNE Only				SOMEC		3.50	0.00	3.50	0.00						
	OSS - Manual Service Order Charge, Per Local Service Request (LSR) - UNE Only				SOMAN		15.66	0.00	1.97	0.00						
UNE SERVICE DATE ADVANCEMENT CHARGE																
	NOTE: The Expedite charge will be maintained commensurate with BellSouth's FCC No.1 Tariff, Section 5 as applicable.															
	UNE Expedite Charge per Circuit or Line Assignable USOC, per Day			UAL, UEANL, UCL, UEF, UDF, UEQ, UDL, UENTW, UDN, UEA, UHL, ULC, USL, U1T12, U1T48, U1TD1, U1TD3, U1TDX, U1TO3, U1TS1, U1TVX, UC1BC, UC1BL, UC1CC, UC1CL, UC1DC, UC1DL, UC1EC, UC1EL, UC1FC, UC1FL, UC1GC, UC1GL, UC1HC, UC1HL, UDL12, UDL48, UDLO3, UDLSX, UE3, ULD12, ULD48, ULDD1, ULDD3, ULDDX, ULDO3, ULDS1, ULDVX, UNC1X, UNC3X, UNCDX, UNCNX, UNCSX, UNCVX, UNLD1, UNLD3, UXTD1, UXTD3, UXTS1, U1TUC, U1TUD, U1TUB, U1TUA, NTCVG, NTCUD, NTCD1	SDASP		200.00									
ORDER MODIFICATION CHARGE																
	Order Modification Charge (OMC)						35.13	0.00	0.00	0.00						
	Order Modification Additional Dispatch Charge (OMCAD)						150.00	0.00	0.00	0.00						
UNBUNDLED EXCHANGE ACCESS LOOP																
	2-WIRE ANALOG VOICE GRADE LOOP															
	2-Wire Analog Voice Grade Loop - Service Level 1- Zone 1		1	UEANL	UEAL2	12.58	37.81	17.56	23.49	5.30						
	2-Wire Analog Voice Grade Loop - Service Level 1- Zone 2		2	UEANL	UEAL2	21.05	37.81	17.56	23.49	5.30						
	2-Wire Analog Voice Grade Loop - Service Level 1- Zone 3		3	UEANL	UEAL2	34.34	37.81	17.56	23.49	5.30						
	2-Wire Analog Voice Grade Loop - Service Level 1- Zone 1		1	UEANL	UEASL	12.58	37.81	17.56	23.49	5.30						
	2-Wire Analog Voice Grade Loop - Service Level 1- Zone 2		2	UEANL	UEASL	21.05	37.81	17.56	23.49	5.30						
	2-Wire Analog Voice Grade Loop - Service Level 1- Zone 3		3	UEANL	UEASL	34.34	37.81	17.56	23.49	5.30						
	Tag Loop at End User Premise			UEANL	URETL		8.93	0.88								
	Loop Testing - Basic 1st Half Hour			UEANL	URET1		34.16	0.00								
	Loop Testing - Basic Additional Half Hour			UEANL	URETA		19.85	19.85								
	Manual Order Coordination for UVL-SL1s (per loop)			UEANL	UEAMC		8.15	8.15								
	Order Coordination for Specified Conversion Time for UVL-SL1 (per LSR)			UEANL	OCOSL		18.09									

UNBUNDLED NETWORK ELEMENTS - Alabama

Att: 2 Exh: A

CATEGORY	RATE ELEMENTS	Interim	Zone	BCS	USOC	RATES($)					Svc Order Submitted Elec per LSR	Svc Order Submitted Manually per LSR	Incremental Charge - Manual Svc Order vs. Electronic-1st	Incremental Charge - Manual Svc Order vs. Electronic-Add'l	Incremental Charge - Manual Svc Order vs. Electronic-Disc 1st	Incremental Charge - Manual Svc Order vs. Electronic-Disc Add'l
						Rec	Nonrecurring		Nonrecurring Disconnect		OSS Rates($)					
							First	Add'l	First	Add'l	SOMEC	SOMAN	SOMAN	SOMAN	SOMAN	SOMAN
	Unbundled Non-Design Voice Loop, billing for AT&T providing make-up (Engineering Information - E.I.)			UEANL	UEANM		13.44									
	Unbundled Loop Service Rearrangement, change in loop facility, per circuit			UEANL	UREWO		15.78	8.94	23.49	5.30						
	Bulk Migration, per 2 Wire Voice Loop-SL1			UEANL	UREPN		37.81	17.56	23.49	5.30						
	Bulk Migration Order Coordination, per 2 Wire Voice Loop-SL1			UEANL	UREPM		8.15	8.15								
2-WIRE Unbundled COPPER LOOP																
	2-Wire Unbundled Copper Loop - Non-Designed Zone 1		1	UEQ	UEQ2X	11.20	34.14	15.10	21.25	4.15						
	2 Wire Unbundled Copper Loop - Non-Designed - Zone 2		2	UEQ	UEQ2X	13.27	34.14	15.10	21.25	4.15						
	2 Wire Unbundled Copper Loop - Non-Designed - Zone 3		3	UEQ	UEQ2X	15.07	34.14	15.10	21.25	4.15						
	Tag Loop at End User Premise			UEQ	URETL		8.93	0.88								
	Loop Testing - Basic 1st Half Hour			UEQ	URET1		34.16	0.00								
	Loop Testing - Basic Additional Half Hour			UEQ	URETA		19.85	19.85								
	Manual Order Coordination 2 Wire Unbundled Copper Loop - Non-Designed (per loop)			UEQ	USBMC		8.15	8.15								
	Unbundled Copper Loop - Non-Designed, billing for AT&T providing make-up (Engineering Information - E.I.)			UEQ	UEQMU		13.44									
	Unbundled Loop Service Rearrangement, change in loop facility, per circuit			UEQ	UREWO		14.27	7.43	21.25	4.15						
	Bulk Migration, per 2 Wire UCL-ND			UEQ	UREPN		34.14	15.10	21.25	4.15						
	Bulk Migration Order Coordination, per 2 Wire UCL-ND			UEQ	UREPM		8.15	8.15								
UNBUNDLED EXCHANGE ACCESS LOOP																
2-WIRE ANALOG VOICE GRADE LOOP																
	2-Wire Analog Voice Grade Loop - Service Level 2 w/Loop or Ground Start Signaling - Zone 1		1	UEA	UEAL2	14.38	88.00	55.00	47.24	7.44						
	2-Wire Analog Voice Grade Loop - Service Level 2 w/Loop or Ground Start Signaling - Zone 2		2	UEA	UEAL2	22.85	88.00	55.00	47.24	7.44						
	2-Wire Analog Voice Grade Loop - Service Level 2 w/Loop or Ground Start Signaling - Zone 3		3	UEA	UEAL2	36.14	88.00	55.00	47.24	7.44						
	2-Wire Analog Voice Grade Loop - Service Level 2 w/Reverse Battery Signaling - Zone 1		1	UEA	UEAR2	14.38	88.00	55.00	47.24	7.44						
	2-Wire Analog Voice Grade Loop - Service Level 2 w/Reverse Battery Signaling - Zone 2		2	UEA	UEAR2	22.85	88.00	55.00	47.24	7.44						
	2-Wire Analog Voice Grade Loop - Service Level 2 w/Reverse Battery Signaling - Zone 3		3	UEA	UEAR2	36.14	88.00	55.00	47.24	7.44						
	Switch-As-Is Conversion rate per UNE Loop, Single LSR, (per DS0)			UEA	URESL		5.59	5.59								
	Switch-As-Is Conversion rate per UNE Loop, Spreadsheet (per DS0)			UEA	URESP		5.59	5.59								
	Unbundled Loop Service Rearrangement, change in loop facility, per circuit			UEA	UREWO		87.72	36.36								
	Loop Tagging - Service Level 2 (SL2)			UEA	URETL		11.21	1.10								
	Bulk Migration, per 2 Wire Voice Loop-SL2			UEA	UREPN		88.00	55.00								
	Bulk Migration Order Coordination, per 2 Wire Voice Loop-SL2			UEA	UREPM		0.00	0.00								
4-WIRE ANALOG VOICE GRADE LOOP																
	4-Wire Analog Voice Grade Loop - Zone 1		1	UEA	UEAL4	25.34	131.97	94.51	59.14	14.50						
	4-Wire Analog Voice Grade Loop - Zone 2		2	UEA	UEAL4	38.58	131.97	94.51	59.14	14.50						
	4-Wire Analog Voice Grade Loop - Zone 3		3	UEA	UEAL4	60.02	131.97	94.51	59.14	14.50						
	Switch-As-Is Conversion rate per UNE Loop, Single LSR, (per DS0)			UEA	URESL		5.59	5.59								
	Switch-As-Is Conversion rate per UNE Loop, Spreadsheet, (per DS0)			UEA	URESP		5.59	5.59								
	Unbundled Loop Service Rearrangement, change in loop facility, per circuit			UEA	UREWO		87.72	36.36								
2-WIRE ISDN DIGITAL GRADE LOOP																
	2-Wire ISDN Digital Grade Loop - Zone 1		1	UDN	U1L2X	21.88	117.24	79.77	52.88	10.54						
	2-Wire ISDN Digital Grade Loop - Zone 2		2	UDN	U1L2X	32.85	117.24	79.77	52.88	10.54						
	2-Wire ISDN Digital Grade Loop - Zone 3		3	UDN	U1L2X	48.55	117.24	79.77	52.88	10.54						
	Unbundled Loop Service Rearrangement, change in loop facility, per circuit			UDN	UREWO		91.63	44.16								
2-WIRE ASYMMETRICAL DIGITAL SUBSCRIBER LINE (ADSL) COMPATIBLE LOOP																
	2 Wire Unbundled ADSL Loop including manual service inquiry & facility reservation - Zone 1		1	UAL	UAL2X	11.01	110.00	68.00	47.24	7.44						

CATEGORY	RATE ELEMENTS	Interim	Zone	BCS	USOC	RATES($)					Svc Order Submitted Elec per LSR	Svc Order Submitted Manually per LSR	Incremental Charge - Manual Svc Order vs. Electronic-1st	Incremental Charge - Manual Svc Order vs. Electronic-Add'l	Incremental Charge - Manual Svc Order vs. Electronic-Disc 1st	Incremental Charge - Manual Svc Order vs. Electronic-Disc Add'l
						Rec	Nonrecurring		Nonrecurring Disconnect		OSS Rates($)					
							First	Add'l	First	Add'l	SOMEC	SOMAN	SOMAN	SOMAN	SOMAN	SOMAN
	2 Wire Unbundled ADSL Loop including manual service inquiry & facility reservation - Zone 2		2	UAL	UAL2X	12.73	110.00	68.00	47.24	7.44						
	2 Wire Unbundled ADSL Loop including manual service inquiry & facility reservation - Zone 3		3	UAL	UAL2X	14.30	110.00	68.00	47.24	7.44						
	2 Wire Unbundled ADSL Loop without manual service inquiry & facility reservaton - Zone 1		1	UAL	UAL2W	11.01	90.00	57.00	47.24	7.44						
	2 Wire Unbundled ADSL Loop without manual service inquiry & facility reservaton - Zone 2		2	UAL	UAL2W	12.73	90.00	57.00	47.24	7.44						
	2 Wire Unbundled ADSL Loop without manual service inquiry & facility reservaton - Zone 3		3	UAL	UAL2W	14.30	90.00	57.00	47.24	7.44						
	Unbundled Loop Service Rearrangement, change in loop facility, per circuit			UAL	UREWO		86.20	40.40								
	2-WIRE HIGH BIT RATE DIGITAL SUBSCRIBER LINE (HDSL) COMPATIBLE LOOP															
	2 Wire Unbundled HDSL Loop including manual service inquiry & facility reservation - Zone 1		1	UHL	UHL2X	8.74	110.00	68.00	47.24	7.44						
	2 Wire Unbundled HDSL Loop including manual service inquiry & facility reservation - Zone 2		2	UHL	UHL2X	10.17	110.00	68.00	47.24	7.44						
	2 Wire Unbundled HDSL Loop including manual service inquiry & facility reservation - Zone 3		3	UHL	UHL2X	11.44	110.00	68.00	47.24	7.44						
	2 Wire Unbundled HDSL Loop without manual service inquiry and facility reservation - Zone 1		1	UHL	UHL2W	8.74	90.00	57.00	47.24	7.44						
	2 Wire Unbundled HDSL Loop without manual service inquiry and facility reservation - Zone 2		2	UHL	UHL2W	10.17	90.00	57.00	47.24	7.44						
	2 Wire Unbundled HDSL Loop without manual service inquiry and facility reservation - Zone 3		3	UHL	UHL2W	11.44	90.00	57.00	47.24	7.44						
	Unbundled Loop Service Rearrangement, change in loop facility, per circuit			UHL	UREWO		86.14	40.40								
	4-WIRE HIGH BIT RATE DIGITAL SUBSCRIBER LINE (HDSL) COMPATIBLE LOOP															
	4 Wire Unbundled HDSL Loop including manual service inquiry and facility reservation - Zone 1		1	UHL	UHL4X	13.95	148.36	68.00	51.70	9.73						
	4-Wire Unbundled HDSL Loop including manual service inquiry and facility reservation - Zone 2		2	UHL	UHL4X	15.56	148.36	68.00	51.70	9.73						
	4-Wire Unbundled HDSL Loop including manual service inquiry and facility reservation - Zone 3		3	UHL	UHL4X	15.25	148.36	68.00	51.70	9.73						
	4-Wire Unbundled HDSL Loop without manual service inquiry and facility reservation - Zone 1		1	UHL	UHL4W	13.95	94.00	57.00	51.70	9.73						
	4-Wire Unbundled HDSL Loop without manual service inquiry and facility reservation - Zone 2		2	UHL	UHL4W	15.56	94.00	57.00	51.70	9.73						
	4-Wire Unbundled HDSL Loop without manual service inquiry and facility reservation - Zone 3		3	UHL	UHL4W	15.25	94.00	57.00	51.70	9.73						
	Unbundled Loop Service Rearrangement, change in loop facility, per circuit			UHL	UREWO		86.14	40.40								
	4-WIRE DS1 DIGITAL LOOP															
	4-Wire DS1 Digital Loop - Zone 1		1	USL	USLXX	82.55	252.47	157.54	44.70	11.71						
	4-Wire DS1 Digital Loop - Zone 2		2	USL	USLXX	154.18	252.47	157.54	44.70	11.71						
	4-Wire DS1 Digital Loop - Zone 3		3	USL	USLXX	314.52	252.47	157.54	44.70	11.71						
	Switch-As-Is Conversion rate per UNE Loop, single LSR, (per DS1)			USL	URESL		5.59	5.59								
	Switch-As-Is Conversion rate per UNE Loop, Spreadsheet, (per DS1)			USL	URESP		5.59	5.59								
	Unbundled Loop Service Rearrangement, change in loop facility, per circuit			USL	UREWO		101.09	43.05								
	4-WIRE 19.2, 56 OR 64 KBPS DIGITAL GRADE LOOP															
	4 Wire Unbundled Digital Loop 2.4 Kbps - Zone 1		1	UDL	UDL2X	26.09	126.27	88.80	59.14	14.50						
	4 Wire Unbundled Digital Loop 2.4 Kbps - Zone 2		2	UDL	UDL2X	35.95	126.27	88.80	59.14	14.50						
	4 Wire Unbundled Digital Loop 2.4 Kbps - Zone 3		3	UDL	UDL2X	37.88	126.27	88.80	59.14	14.50						
	4 Wire Unbundled Digital Loop 4.8 Kbps - Zone 1		1	UDL	UDL4X	26.09	126.27	88.80	59.14	14.50						
	4 Wire Unbundled Digital Loop 4.8 Kbps - Zone 2		2	UDL	UDL4X	35.95	126.27	88.80	59.14	14.50						
	4 Wire Unbundled Digital Loop 4.8 Kbps - Zone 3		3	UDL	UDL4X	37.88	126.27	88.80	59.14	14.50						
	4 Wire Unbundled Digital Loop 9.6 Kbps - Zone 1		1	UDL	UDL9X	26.09	126.27	88.80	59.14	14.50						
	4 Wire Unbundled Digital Loop 9.6 Kbps - Zone 2		2	UDL	UDL9X	35.95	126.27	88.80	59.14	14.50						
	4 Wire Unbundled Digital Loop 9.6 Kbps - Zone 3		3	UDL	UDL9X	37.88	126.27	88.80	59.14	14.50						
	4 Wire Unbundled Digital 19.2 Kbps - Zone 1		1	UDL	UDL19	26.09	126.27	88.80	59.14	14.50						
	4 Wire Unbundled Digital 19.2 Kbps - Zone 2		2	UDL	UDL19	35.95	126.27	88.80	59.14	14.50						

UNBUNDLED NETWORK ELEMENTS - Alabama

Att: 2 Exh: A

CATEGORY	RATE ELEMENTS	Interim	Zone	BCS	USOC	RATES($)					Svc Order Submitted Elec per LSR	Svc Order Submitted Manually per LSR	Incremental Charge - Manual Svc Order vs. Electronic-1st	Incremental Charge - Manual Svc Order vs. Electronic-Add'l	Incremental Charge - Manual Svc Order vs. Electronic-Disc 1st	Incremental Charge - Manual Svc Order vs. Electronic-Disc Add'l
						Rec	Nonrecurring		Nonrecurring Disconnect		OSS Rates($)					
							First	Add'l	First	Add'l	SOMEC	SOMAN	SOMAN	SOMAN	SOMAN	SOMAN
	4 Wire Unbundled Digital 19.2 Kbps - Zone 3		3	UDL	UDL19	37.88	126.27	88.80	59.14	14.50						
	4 Wire Unbundled Digital Loop 56 Kbps - Zone 1		1	UDL	UDL56	26.09	126.27	88.80	59.14	14.50						
	4 Wire Unbundled Digital Loop 56 Kbps - Zone 2		2	UDL	UDL56	35.95	126.27	88.80	59.14	14.50						
	4 Wire Unbundled Digital Loop 56 Kbps - Zone 3		3	UDL	UDL56	37.88	126.27	88.80	59.14	14.50						
	4 Wire Unbundled Digital Loop 64 Kbps - Zone 1		1	UDL	UDL64	26.09	126.27	88.80	59.14	14.50						
	4 Wire Unbundled Digital Loop 64 Kbps - Zone 2		2	UDL	UDL64	35.95	126.27	88.80	59.14	14.50						
	4 Wire Unbundled Digital Loop 64 Kbps - Zone 3		3	UDL	UDL64	37.88	126.27	88.80	59.14	14.50						
	Switch-As-Is Conversion rate per UNE Loop, single LSR, (per DS0)			UDL	URESL		5.59	5.59								
	Switch-As-Is Conversion rate per UNE Loop, Spreadsheet, (per DS0)			UDL	URESP		5.59	5.59								
	Unbundled Loop Service Rearrangement, change in loop facility, per circuit			UDL	UREWO		102.13	49.75								
2-WIRE Unbundled COPPER LOOP																
	2-Wire Unbundled Copper Loop-Designed including manual service inquiry & facility reservation - Zone 1		1	UCL	UCLPB	11.01	112.46	65.30	47.24	7.44						
	2-Wire Unbundled Copper Loop-Designed including manual service inquiry & facility reservation - Zone 2		2	UCL	UCLPB	12.73	112.46	65.30	47.24	7.44						
	2 Wire Unbundled Copper Loop-Designed including manual service inquiry & facility reservation - Zone 3		3	UCL	UCLPB	14.30	112.46	65.30	47.24	7.44						
	2-Wire Unbundled Copper Loop-Designed without manual service inquiry and facility reservation - Zone 1		1	UCL	UCLPW	11.01	91.46	54.30	47.24	7.44						
	2-Wire Unbundled Copper Loop-Designed without manual service inquiry and facility reservation - Zone 2		2	UCL	UCLPW	12.73	91.46	54.30	47.24	7.44						
	2-Wire Unbundled Copper Loop-Designed without manual service inquiry and facility reservation - Zone 3		3	UCL	UCLPW	14.30	91.46	54.30	47.24	7.44						
	Order Coordination for Unbundled Copper Loops (per loop)			UCL	UCLMC		8.15	8.15								
	Unbundled Loop Service Rearrangement, change in loop facility, per circuit			UCL	UREWO		97.23	42.48								
4-WIRE COPPER LOOP																
	4-Wire Copper Loop-Designed including manual service inquiry and facility reservation - Zone 1		1	UCL	UCL4S	17.36	135.21	88.05	51.70	9.73						
	4-Wire Copper Loop-Designed including manual service inquiry and facility reservation - Zone 2		2	UCL	UCL4S	20.76	135.21	88.05	51.70	9.73						
	4-Wire Copper Loop-Designed including manual service inquiry and facility reservation - Zone 3		3	UCL	UCL4S	28.21	135.21	88.05	51.70	9.73						
	4-Wire Copper Loop-Designed without manual service inquiry and facility reservation - Zone 1		1	UCL	UCL4W	17.36	114.21	67.05	51.70	9.73						
	4-Wire Copper Loop-Designed without manual service inquiry and facility reservation - Zone 2		2	UCL	UCL4W	20.76	114.21	67.05	51.70	9.73						
	4-Wire Copper Loop-Designed without manual service inquiry and facility reservation - Zone 3		3	UCL	UCL4W	28.21	114.21	67.05	51.70	9.73						
	Order Coordination for Unbundled Copper Loops (per loop)			UCL	UCLMC		8.15	8.15								
	Unbundled Loop Service Rearrangement, change in loop facility, per circuit			UCL	UREWO		97.23	42.48								
	Order Coordination for Specified Conversion Time (per LSR)			UEA, UDN, UAL, UHL, UDL, USL	OCOSL		18.90									
Rearrangements																
	EEL to UNE-L Retermination, per 2 Wire Unbundled Voice Loop-SL2			UEA	UREEL		87.72	36.36								
	EEL to UNE-L Retermination, per 4 Wire Unbundled Voice Loop			UEA	UREEL		87.72	36.36								
	EEL to UNE-L Retermination, per 2 Wire ISDN Loop			UDN	UREEL		91.63	44.16								
	EEL to UNE-L Retermination, per 4 Wire Unbundled Digital Loop			UDL	UREEL		102.13	49.75								
	EEL to UNE-L Retermination, per 4 Wire Unbundled DS1 Loop			USL	UREEL		101.09	43.05								
UNE LOOP COMMINGLING																
2-WIRE ANALOG VOICE GRADE LOOP - COMMINGLING																
	2-Wire Analog Voice Grade Loop - Service Level 2 w/Loop or Ground Start Signaling - Zone 1		1	NTCVG	UEAL2	14.38	88.00	55.00	47.24	7.44						
	2-Wire Analog Voice Grade Loop - Service Level 2 w/Loop or Ground Start Signaling - Zone 2		2	NTCVG	UEAL2	22.85	88.00	55.00	47.24	7.44						
	2-Wire Analog Voice Grade Loop - Service Level 2 w/Loop or Ground Start Signaling - Zone 3		3	NTCVG	UEAL2	36.14	88.00	55.00	47.24	7.44						

UNBUNDLED NETWORK ELEMENTS - Alabama

Att: 2 Exh: A

CATEGORY	RATE ELEMENTS	Interim	Zone	BCS	USOC	RATES($)					Svc Order Submitted Elec per LSR	Svc Order Submitted Manually per LSR	Incremental Charge - Manual Svc Order vs. Electronic-1st	Incremental Charge - Manual Svc Order vs. Electronic-Add'l	Incremental Charge - Manual Svc Order vs. Electronic-Disc 1st	Incremental Charge - Manual Svc Order vs. Electronic-Disc Add'l
						Rec	Nonrecurring		Nonrecurring Disconnect		OSS Rates($)					
							First	Add'l	First	Add'l	SOMEC	SOMAN	SOMAN	SOMAN	SOMAN	SOMAN
	2-Wire Analog Voice Grade Loop - Service Level 2 w/Reverse Battery Signaling - Zone 1		1	NTCVG	UEAR2	14.38	88.00	55.00	47.24	7.44						
	2-Wire Analog Voice Grade Loop - Service Level 2 w/Reverse Battery Signaling - Zone 2		2	NTCVG	UEAR2	22.85	88.00	55.00	47.24	7.44						
	2-Wire Analog Voice Grade Loop - Service Level 2 w/Reverse Battery Signaling - Zone 3		3	NTCVG	UEAR2	36.14	88.00	55.00	47.24	7.44						
	Switch-As-Is Conversion rate per UNE Loop, Single LSR, (per DS0)			NTCVG	URESL		5.59	5.59								
	Switch-As-Is Conversion rate per UNE Loop, Spreadsheet (per DS0)			NTCVG	URESP		5.59	5.59								
	Unbundled Loop Service Rearrangement, change in loop facility, per circuit			NTCVG	UREWO		87.72	36.36								
	Loop Tagging - Service Level 2 (SL2)			NTCVG	URETL		11.21	1.10								
4-WIRE ANALOG VOICE GRADE LOOP - COMMINGLING																
	4-Wire Analog Voice Grade Loop - Zone 1		1	NTCVG	UEAL4	25.34	131.97	94.51	59.14	14.50						
	4-Wire Analog Voice Grade Loop - Zone 2		2	NTCVG	UEAL4	38.58	131.97	94.51	59.14	14.50						
	4-Wire Analog Voice Grade Loop - Zone 3		3	NTCVG	UEAL4	60.02	131.97	94.51	59.14	14.50						
	Switch-As-Is Conversion rate per UNE Loop, Single LSR, (per DS0)			NTCVG	URESL		5.59	5.59								
	Switch-As-Is Conversion rate per UNE Loop, Spreadsheet, (per DS0)			NTCVG	URESP		5.59	5.59								
	Unbundled Loop Service Rearrangement, change in loop facility, per circuit			NTCVG	UREWO		87.72	36.36								
4-WIRE DS1 DIGITAL LOOP - COMMINGLING																
	4-Wire DS1 Digital Loop - Zone 1		1	NTCD1	USLXX	82.55	252.47	157.54	44.70	11.71						
	4-Wire DS1 Digital Loop - Zone 2		2	NTCD1	USLXX	154.18	252.47	157.54	44.70	11.71						
	4-Wire DS1 Digital Loop - Zone 3		3	NTCD1	USLXX	314.52	252.47	157.54	44.70	11.71						
	Switch-As-Is Conversion rate per UNE Loop, single LSR, (per DS1)			NTCD1	URESL		5.59	5.59								
	Switch-As-Is Conversion rate per UNE Loop, Spreadsheet, (per DS1)			NTCD1	URESP		5.59	5.59								
	Unbundled Loop Service Rearrangement, change in loop facility, per circuit			NTCD1	UREWO		101.09	43.05								
4-WIRE 19.2, 56 OR 64 KBPS DIGITAL GRADE LOOP - COMMINGLING																
	4 Wire Unbundled Digital Loop 2.4 Kbps - Zone 1		1	NTCUD	UDL2X	26.09	126.27	88.80	59.14	14.50						
	4 Wire Unbundled Digital Loop 2.4 Kbps - Zone 2		2	NTCUD	UDL2X	35.95	126.27	88.80	59.14	14.50						
	4 Wire Unbundled Digital Loop 2.4 Kbps - Zone 3		3	NTCUD	UDL2X	37.88	126.27	88.80	59.14	14.50						
	4 Wire Unbundled Digital Loop 4.8 Kbps - Zone 1		1	NTCUD	UDL4X	26.09	126.27	88.80	59.14	14.50						
	4 Wire Unbundled Digital Loop 4.8 Kbps - Zone 2		2	NTCUD	UDL4X	35.95	126.27	88.80	59.14	14.50						
	4 Wire Unbundled Digital Loop 4.8 Kbps - Zone 3		3	NTCUD	UDL4X	37.88	126.27	88.80	59.14	14.50						
	4 Wire Unbundled Digital Loop 9.6 Kbps - Zone 1		1	NTCUD	UDL9X	26.09	126.27	88.80	59.14	14.50						
	4 Wire Unbundled Digital Loop 9.6 Kbps - Zone 2		2	NTCUD	UDL9X	35.95	126.27	88.80	59.14	14.50						
	4 Wire Unbundled Digital Loop 9.6 Kbps - Zone 3		3	NTCUD	UDL9X	37.88	126.27	88.80	59.14	14.50						
	4 Wire Unbundled Digital 19.2 Kbps - Zone 1		1	NTCUD	UDL19	26.09	126.27	88.80	59.14	14.50						
	4 Wire Unbundled Digital 19.2 Kbps - Zone 2		2	NTCUD	UDL19	35.95	126.27	88.80	59.14	14.50						
	4 Wire Unbundled Digital 19.2 Kbps - Zone 3		3	NTCUD	UDL19	37.88	126.27	88.80	59.14	14.50						
	4 Wire Unbundled Digital Loop 56 Kbps - Zone 1		1	NTCUD	UDL56	26.09	126.27	88.80	59.14	14.50						
	4 Wire Unbundled Digital Loop 56 Kbps - Zone 2		2	NTCUD	UDL56	35.95	126.27	88.80	59.14	14.50						
	4 Wire Unbundled Digital Loop 56 Kbps - Zone 3		3	NTCUD	UDL56	37.88	126.27	88.80	59.14	14.50						
	4 Wire Unbundled Digital Loop 64 Kbps - Zone 1		1	NTCUD	UDL64	26.09	126.27	88.80	59.14	14.50						
	4 Wire Unbundled Digital Loop 64 Kbps - Zone 2		2	NTCUD	UDL64	35.95	126.27	88.80	59.14	14.50						
	4 Wire Unbundled Digital Loop 64 Kbps - Zone 3		3	NTCUD	UDL64	37.88	126.27	88.80	59.14	14.50						
	Switch-As-Is Conversion rate per UNE Loop, single LSR, (per DS0)			NTCUD	URESL		5.59	5.59								
	Switch-As-Is Conversion rate per UNE Loop, Spreadsheet, (per DS0)			NTCUD	URESP		5.59	5.59								
	Unbundled Loop Service Rearrangement, change in loop facility, per circuit			NTCUD	UREWO		102.13	49.75								
	Order Coordination for Specified Conversion Time (per LSR)			NTCVG, NTCUD, NTCD1	OCOSL		18.90									
MAINTENANCE OF SERVICE																

UNBUNDLED NETWORK ELEMENTS - Alabama																	Att: 2 Exh: A
CATEGORY		RATE ELEMENTS	Interim	Zone	BCS	USOC	RATES($)					Svc Order Submitted Elec per LSR	Svc Order Submitted Manually per LSR	Incremental Charge - Manual Svc Order vs. Electronic-1st	Incremental Charge - Manual Svc Order vs. Electronic-Add'l	Incremental Charge - Manual Svc Order vs. Electronic-Disc 1st	Incremental Charge - Manual Svc Order vs. Electronic-Disc Add'l
							Rec	Nonrecurring		Nonrecurring Disconnect		OSS Rates($)					
								First	Add'l	First	Add'l	SOMEC	SOMAN	SOMAN	SOMAN	SOMAN	SOMAN
		Maintenance of Service Charge, Basic Time, per half hour			UDC, UEA, UDL, UDN, USL, UAL, UHL, UCL, NTCVG, NTCUD, NTCD1, U1TD1, U1TD3, U1TDX, U1TS1, U1TVX, UDF, UDFCX, UDLSX, UE3, ULDD1, ULDD3, ULDDX, ULDS1, ULDVX, UNC1X, UNC3X, UNCDX, UNCSX, UNCVX, ULS	MVVBT		80.00	55.00								
		Maintenance of Service Charge, Overtime, per half hour			UDC, UEA, UDL, UDN, USL, UAL, UHL, UCL, NTCVG, NTCUD, NTCD1, U1TD1, U1TD3, U1TDX, U1TS1, U1TVX, UDF, UDFCX, UDLSX, UE3, ULDD1, ULDD3, ULDDX, ULDS1, ULDVX, UNC1X, UNC3X, UNCDX, UNCSX, UNCVX, ULS	MVVOT		90.00	65.00								
		Maintenance of Service Charge, Premium, per half hour			UDC, UEA, UDL, UDN, USL, UAL, UHL, UCL, NTCVG, NTCUD, NTCD1, U1TD1, U1TD3, U1TDX, U1TS1, U1TVX, UDF, UDFCX, UDLSX, UE3, ULDD1, ULDD3, ULDDX, ULDS1, ULDVX, UNC1X, UNC3X, UNCDX, UNCSX, UNCVX, ULS	MVVPT		100.00	75.00								
LOOP MODIFICATION																	
		Unbundled Loop Modification, Removal of Load Coils - 2 Wire pair less than or equal to 18k ft. per Unbundled Loop			UAL, UHL, UCL, UEQ, UEA, UEANL, UEPSR, UEPSB	ULM2L		0.00	0.00								
		Unbundled Loop Modification Removal of Load Coils - 4 Wire less than or equal to 18K ft, per Unbundled Loop			UHL, UCL, UEA	ULM4L		0.00	0.00								
		Unbundled Loop Modification Removal of Bridged Tap Removal, per unbundled loop			UAL, UHL, UCL, UEQ, UEA, UEANL, UEPSR, UEPSB	ULMBT		32.41	32.41								
SUB-LOOPS																	
	Sub-Loop Distribution																
		Sub-Loop - Per Cross Box Location - CLEC Feeder Facility Set-Up			UEANL, UEF	USBSA		244.42									
		Sub-Loop - Per Cross Box Location - Per 25 Pair Panel Set-Up			UEANL, UEF	USBSB		22.64									
		Sub-Loop - Per Building Equipment Room - CLEC Feeder Facility Set-Up			UEANL	USBSC		177.45									
		Sub-Loop - Per Building Equipment Room - Per 25 Pair Panel Set-Up			UEANL	USBSD		55.15									

UNBUNDLED NETWORK ELEMENTS - Alabama																	Att: 2 Exh: A
CATEGORY		RATE ELEMENTS	Interim	Zone	BCS	USOC	RATES($)					Svc Order Submitted Elec per LSR	Svc Order Submitted Manually per LSR	Incremental Charge - Manual Svc Order vs. Electronic-1st	Incremental Charge - Manual Svc Order vs. Electronic-Add'l	Incremental Charge - Manual Svc Order vs. Electronic-Disc 1st	Incremental Charge - Manual Svc Order vs. Electronic-Disc Add'l
							Rec	Nonrecurring		Nonrecurring Disconnect		OSS Rates($)					
								First	Add'l	First	Add'l	SOMEC	SOMAN	SOMAN	SOMAN	SOMAN	SOMAN
		Sub-Loop Distribution Per 2-Wire Analog Voice Grade Loop - Zone 1		1	UEANL	USBN2	11.21	65.80	30.96	45.25	6.70						
		Sub-Loop Distribution Per 2-Wire Analog Voice Grade Loop - Zone 2		2	UEANL	USBN2	11.94	65.80	30.96	45.25	6.70						
		Sub-Loop Distribution Per 2-Wire Analog Voice Grade Loop - Zone 3		3	UEANL	USBN2	16.86	65.80	30.96	45.25	6.70						
		Order Coordination for Unbundled Sub-Loops, per sub-loop pair			UEANL	USBMC		8.15	8.15								
		Sub-Loop Distribution Per 4-Wire Analog Voice Grade Loop - Zone 1		1	UEANL	USBN4	8.46	79.03	44.19	49.71	9.07						
		Sub-Loop Distribution Per 4-Wire Analog Voice Grade Loop - Zone 2		2	UEANL	USBN4	16.67	79.03	44.19	49.71	9.07						
		Sub-Loop Distribution Per 4-Wire Analog Voice Grade Loop - Zone 3		3	UEANL	USBN4	32.57	79.03	44.19	49.71	9.07						
		Order Coordination for Unbundled Sub-Loops, per sub-loop pair			UEANL	USBMC		8.15	8.15								
		Sub-Loop 2-Wire Intrabuilding Network Cable (INC)			UEANL	USBR2	2.27	53.01	18.17	45.25	6.70						
		Order Coordination for Unbundled Sub-Loops, per sub-loop pair			UEANL	USBMC		8.15	8.15								
		Sub-Loop 4-Wire Intrabuilding Network Cable (INC)			UEANL	USBR4	5.16	59.25	24.41	49.71	9.07						
		Order Coordination for Unbundled Sub-Loops, per sub-loop pair			UEANL	USBMC		8.15	8.15								
		Loop Testing - Basic 1st Half Hour			UEANL	URET1		34.16	0.00								
		Loop Testing - Basic Additional Half Hour			UEANL	URETA		19.85	19.85								
		2 Wire Copper Unbundled Sub-Loop Distribution - Zone 1		1	UEF	UCS2X	6.22	65.80	30.96	45.25	6.70						
		2 Wire Copper Unbundled Sub-Loop Distribution - Zone 2		2	UEF	UCS2X	8.76	65.80	30.96	45.25	6.70						
		2 Wire Copper Unbundled Sub-Loop Distribution - Zone 3		3	UEF	UCS2X	11.27	65.80	30.96	45.25	6.70						
		Order Coordination for Unbundled Sub-Loops, per sub-loop pair			UEF	USBMC		8.15	8.15								
		4 Wire Copper Unbundled Sub-Loop Distribution - Zone 1		1	UEF	UCS4X	6.11	79.03	44.19	49.71	9.07						
		4 Wire Copper Unbundled Sub-Loop Distribution - Zone 2		2	UEF	UCS4X	12.61	79.03	44.19	49.71	9.07						
		4 Wire Copper Unbundled Sub-Loop Distribution - Zone 3		3	UEF	UCS4X	15.36	79.03	44.19	49.71	9.07						
		Order Coordination for Unbundled Sub-Loops, per sub-loop pair			UEF	USBMC		8.15	8.15								
		Loop Tagging Service Level 1, Unbundled Copper Loop, Non-Designed and Distribution Subloops			UEF, UEANL	URETL		8.93	0.88								
		Loop Testing - Basic 1st Half Hour			UEF	URET1		34.16	0.00								
		Loop Testing - Basic Additional Half Hour			UEF	URETA		19.85	19.85								
	Unbundled Sub-Loop Modification																
		Unbundled Sub-Loop Modification - 2-W Copper Dist Load Coil/Equip Removal per 2-W PR			UEF	ULM2X		175.78	5.10								
		Unbundled Sub-loop Modification - 4-W Copper Dist Load Coil/Equip Removal per 4-W PR			UEF	ULM4X		175.78	5.10								
		Unbundled Loop Modification, Removal of Bridge Tap, per unbundled loop			UEF	ULMBT		278.20	6.11								
	Unbundled Network Terminating Wire (UNTW)																
		Unbundled Network Terminating Wire (UNTW) per Pair			UENTW	UENPP	0.40	30.01									
	Network Interface Device (NID)																
		Network Interface Device (NID) - 1-2 lines			UENTW	UND12		43.23	28.38								
		Network Interface Device (NID) - 1-6 lines			UENTW	UND16		63.97	49.11								
		Network Interface Device Cross Connect - 2 W			UENTW	UNDC2		5.87	5.87								
		Network Interface Device Cross Connect - 4W			UENTW	UNDC4		5.87	5.87								
UNE OTHER, PROVISIONING ONLY - NO RATE																	
		Unbundled Contact Name, Provisioning Only - no rate			UAL, UCL, UDC, UDL, UDN, UEA, UHL, UEANL, UEF, UEQ, UENTW, NTCVG, NTCUD, NTCD1, USL	UNECN	0.00	0.00									
		Unbundled DS1 Loop - Superframe Format Option - no rate			USL, NTCD1	CCOSF		0.00									
		Unbundled DS1 Loop - Expanded Superframe Format option - no rate			USL, NTCD1	CCOEF		0.00									
		NID - Dispatch and Service Order for NID installation			UENTW	UNDBX	0.00	0.00									
		UNTW Circuit Establishment, Provisioning Only - No Rate			UENTW	UENCE	0.00	0.00									

UNBUNDLED NETWORK ELEMENTS - Alabama

Att: 2 Exh: A

CATEGORY	RATE ELEMENTS	Interim	Zone	BCS	USOC	RATES($) Rec	Nonrecurring First	Nonrecurring Add'l	Nonrecurring Disconnect First	Nonrecurring Disconnect Add'l	Svc Order Submitted Elec per LSR	Svc Order Submitted Manually per LSR	Incremental Charge - Manual Svc Order vs. Electronic-1st	Incremental Charge - Manual Svc Order vs. Electronic-Add'l	Incremental Charge - Manual Svc Order vs. Electronic-Disc 1st	Incremental Charge - Manual Svc Order vs. Electronic-Disc Add'l
											OSS Rates($)					
							First	Add'l	First	Add'l	SOMEC	SOMAN	SOMAN	SOMAN	SOMAN	SOMAN
LOOP MAKE-UP																
	Loop Makeup - Preordering Without Reservation, per working or spare facility queried (Manual).			UMK	UMKLW		20.00	20.00								
	Loop Makeup - Preordering With Reservation, per spare facility queried (Manual).			UMK	UMKLP		21.00	21.00								
	Loop Makeup--With or Without Reservation, per working or spare facility queried (Mechanized)			UMK	UMKMQ		0.59	0.59								
LINE SPLITTING																
	END USER ORDERING-CENTRAL OFFICE BASED															
	Line Splitting - per line activation DLEC owned splitter			UEPSR UEPSB	UREOS	0.61										
	Line Splitting - per line activation AT&T owned - physical			UEPSR UEPSB	UREBP	0.61	37.01	21.19	20.02	9.83						
	Line Splitting - per line activation AT&T owned - virtual			UEPSR UEPSB	UREBV	0.61	37.01	21.19	20.02	9.83						
	END USER ORDERING - REMOTE SITE LINE SPLITTING															
	UNBUNDLED EXCHANGE ACCESS LOOP															
	2-WIRE ANALOG VOICE GRADE LOOP															
	2 Wire Analog Voice Grade Loop-Service Level 1-Line Splitting-Zone 1		1	UEPSR UEPSB	UEALS	12.58	37.81	17.56	23.49	5.30						
	2 Wire Analog Voice Grade Loop-Service Level 1-Line Splitting-Zone 1		1	UEPSR UEPSB	UEABS	12.58	37.81	17.56	23.49	5.30						
	2 Wire Analog Voice Grade Loop- Service Level 1-Line Splitting-Zone 2		2	UEPSR UEPSB	UEALS	21.05	37.81	17.56	23.49	5.30						
	2 Wire Analog Voice Grade Loop- Service Level 1-Line Splitting-Zone 2		2	UEPSR UEPSB	UEABS	21.05	37.81	17.56	23.49	5.30						
	2 Wire Analog Voice Grade Loop-Service Level 1-Line Splitting-Zone 3		3	UEPSR UEPSB	UEALS	34.34	37.81	17.56	23.49	5.30						
	2 Wire Analog Voice Grade Loop-Service Level 1-Line Splitting-Zone 3		3	UEPSR UEPSB	UEABS	34.34	37.81	17.56	23.49	5.30						
	PHYSICAL COLLOCATION															
	Physical Collocation-2 Wire Cross Connects (Loop) for Line Splitting			UEPSR UEPSB	PE1LS	0.03	12.30	11.80	6.03	5.44						
	VIRTUAL COLLOCATION															
	Virtual Collocation-2 Wire Cross Connects (Loop) for Line Splitting			UEPSR UEPSB	VE1LS	0.03	12.30	11.80	6.03	5.44						
UNBUNDLED DEDICATED TRANSPORT																
	INTEROFFICE CHANNEL - DEDICATED TRANSPORT															
	Interoffice Channel - 2-Wire Voice Grade - per mile			U1TVX	1L5XX	0.008838										
	Interoffice Channel - 2-Wire Voice Grade - Facility Termination			U1TVX	U1TV2	21.13	40.54	27.41	16.74	6.90						
	Interoffice Channel - 2-Wire Voice Grade Rev Bat. - per mile			U1TVX	1L5XX	0.008838										
	Interoffice Channel - 2-Wire VG Rev Bat. - Facility Termination			U1TVX	U1TR2	21.13	40.54	27.41	16.74	6.90						
	Interoffice Channel - 4-Wire Voice Grade - per mile			U1TVX	1L5XX	0.008838										
	Interoffice Channel - 4- Wire Voice Grade - Facility Termination			U1TVX	U1TV4	18.73	40.54	27.41	16.74	6.90						
	Interoffice Channel - 56 kbps - per mile			U1TDX	1L5XX	0.008838										
	Interoffice Channel - 56 kbps - Facility Termination			U1TDX	U1TD5	15.12	40.54	27.41	16.74	6.90						
	Interoffice Channel - 64 kbps - per mile			U1TDX	1L5XX	0.008838										
	Interoffice Channel - 64 kbps - Facility Termination			U1TDX	U1TD6	15.12	40.54	27.41	16.74	6.90						
	Interoffice Channel - DS1 - per mile			U1TD1	1L5XX	0.18										
	Interoffice Channel - DS1 - Facility Termination			U1TD1	U1TF1	60.16	89.27	81.81	16.35	14.44						
	Interoffice Channel - DS3 - per mile			U1TD3	1L5XX	4.09										
	Interoffice Channel - DS3 - Facility Termination			U1TD3	U1TF3	703.52	278.75	162.76	60.20	58.46						
	Interoffice Channel - STS-1 - per mile			U1TS1	1L5XX	4.09										
	Interoffice Channel - STS-1 - Facility Termination			U1TS1	U1TFS	701.37	278.75	162.76	60.20	58.46						
	UNBUNDLED DARK FIBER - Stand Alone or in Combination															
	Dark Fiber - Interoffice Transport, Per Four Fiber Strands, Per Route Mile Or Fraction Thereof			UDF, UDFCX	1L5DF	22.34										
	Dark Fiber - Interoffice Transport, Per Four Fiber Strands, Per Route Mile Or Fraction Thereof			UDF, UDFCX	UDF14		639.09	137.87	317.06	197.66						
HIGH CAPACITY UNBUNDLED LOCAL LOOP																
	DS-3/STS-1 UNBUNDLED LOCAL LOOP - Stand Alone															
	DS3 Unbundled Local Loop - per mile			UE3	1L5ND	8.38										
	DS3 Unbundled Local Loop - Facility Termination			UE3	UE3PX	308.08	451.52	263.94	119.49	83.58						
	STS-1Unbundled Local Loop - per mile			UDLSX	1L5ND	8.38										
	STS-1 Unbundled Local Loop - Facility Termination			UDLSX	UDLS1	319.83	451.52	263.94	119.49	83.58						

UNBUNDLED NETWORK ELEMENTS - Alabama

Att: 2 Exh: A

CATEGORY	RATE ELEMENTS	Interim	Zone	BCS	USOC	RATES($)					Svc Order Submitted Elec per LSR	Svc Order Submitted Manually per LSR	Incremental Charge - Manual Svc Order vs. Electronic-1st	Incremental Charge - Manual Svc Order vs. Electronic-Add'l	Incremental Charge - Manual Svc Order vs. Electronic-Disc 1st	Incremental Charge - Manual Svc Order vs. Electronic-Disc Add'l
						Rec	Nonrecurring		Nonrecurring Disconnect		OSS Rates($)					
							First	Add'l	First	Add'l	SOMEC	SOMAN	SOMAN	SOMAN	SOMAN	SOMAN
ENHANCED EXTENDED LINK (EELs)																
	Network Elements Used in Combinations															
	2-Wire VG Loop (SL2) in Combination - Zone 1		1	UNCVX	UEAL2	14.38	88.00	55.00	47.24	7.44						
	2-Wire VG Loop (SL2) in Combination - Zone 2		2	UNCVX	UEAL2	22.85	88.00	55.00	47.24	7.44						
	2-Wire VG Loop (SL2) in Combination - Zone 3		3	UNCVX	UEAL2	36.14	88.00	55.00	47.24	7.44						
	4-Wire Analog Voice Grade Loop in Combination - Zone 1		1	UNCVX	UEAL4	25.34	131.97	94.51	59.14	14.50						
	4-Wire Analog Voice Grade Loop in Combination - Zone 2		2	UNCVX	UEAL4	38.58	131.97	94.51	59.14	14.50						
	4-Wire Analog Voice Grade Loop in Combination - Zone 3		3	UNCVX	UEAL4	60.02	131.97	94.51	59.14	14.50						
	2-Wire ISDN Loop in Combination - Zone 1		1	UNCNX	U1L2X	21.88	117.24	79.77	52.88	10.54						
	2-Wire ISDN Loop in Combination - Zone 2		2	UNCNX	U1L2X	32.85	117.24	79.77	52.88	10.54						
	2-Wire ISDN Loop in Combination - Zone 3		3	UNCNX	U1L2X	48.55	117.24	79.77	52.88	10.54						
	4-Wire 56Kbps Digital Grade Loop in Combination - Zone 1		1	UNCDX	UDL56	26.09	126.27	88.80	59.14	14.50						
	4-Wire 56Kbps Digital Grade Loop in Combination - Zone 2		2	UNCDX	UDL56	35.95	126.27	88.80	59.14	14.50						
	4-Wire 56Kbps Digital Grade Loop in Combination - Zone 3		3	UNCDX	UDL56	37.88	126.27	88.80	59.14	14.50						
	4-Wire 64Kbps Digital Grade Loop in Combination - Zone 1		1	UNCDX	UDL64	26.09	126.27	88.80	59.14	14.50						
	4-Wire 64Kbps Digital Grade Loop in Combination - Zone 2		2	UNCDX	UDL64	35.95	126.27	88.80	59.14	14.50						
	4-Wire 64Kbps Digital Grade Loop in Combination - Zone 3		3	UNCDX	UDL64	37.88	126.27	88.80	59.14	14.50						
	4-Wire DS1 Digital Loop in Combination - Zone 1		1	UNC1X	USLXX	82.55	252.47	157.54	44.70	11.71						
	4-Wire DS1 Digital Loop in Combination - Zone 2		2	UNC1X	USLXX	154.18	252.47	157.54	44.70	11.71						
	4-Wire DS1 Digital Loop in Combination - Zone 3		3	UNC1X	USLXX	314.52	252.47	157.54	44.70	11.71						
	DS3 Local Loop in combination - per mile			UNC3X	1L5ND	8.38										
	DS3 Local Loop in combination - Facility Termination			UNC3X	UE3PX	308.08	451.52	263.94	119.49	83.58						
	STS-1 Local Loop in combination - per mile			UNCSX	1L5ND	8.38										
	STS-1 Local Loop in combination - Facility Termination			UNCSX	UDLS1	319.83	451.52	263.94	119.49	83.58						
	Interoffice Channel in combination - 2-wire VG - per mile			UNCVX	1L5XX	0.008838										
	Interoffice Channel in combination - 2-wire VG - Facility Termination			UNCVX	U1TV2	21.13	40.54	27.41	16.74	6.90						
	Interoffice Channel in combination - 4-wire VG - per mile			UNCVX	1L5XX	0.008838										
	Interoffice Channel in combination - 4-wire VG - Facility Termination			UNCVX	U1TV4	18.73	40.54	27.41	16.74	6.90						
	Interoffice Channel in combination - 4-wire 56 kbps - per mile			UNCDX	1L5XX	0.008838										
	Interoffice Channel in combination - 4-wire 56 kbps - Facility Termination			UNCDX	U1TD5	15.12	40.54	27.41	16.74	6.90						
	Interoffice Channel in combination - 4-wire 64 kbps - per mile			UNCDX	1L5XX	0.008838										
	Interoffice Channel in combination - 4-wire 64 kbps - Facility Termination			UNCDX	U1TD6	15.12	40.54	27.41	16.74	6.90						
	Interoffice Channel in combination - DS1 - per mile			UNC1X	1L5XX	0.18										
	Interoffice Channel in combination - DS1 Facility Termination			UNC1X	U1TF1	60.16	89.27	81.81	16.35	14.44						
	Interoffice Channel in combination - DS3 - per mile			UNC3X	1L5XX	4.09										
	Interoffice Channel in combination - DS3 - Facility Termination			UNC3X	U1TF3	703.52	278.75	162.76	60.20	58.46						
	Interoffice Channel in combination - STS-1 - per mile			UNCSX	1L5XX	4.09										
	Interoffice Channel in combination - STS-1 Facility Termination			UNCSX	U1TFS	701.37	278.75	162.76	60.20	58.46						
ADDITIONAL NETWORK ELEMENTS																
	Optional Features & Functions:															
	Clear Channel Capability Extended Frame Option - per DS1	I		U1TD1, ULDD1,UNC1X	CCOEF		0.00									
	Clear Channel Capability Super FrameOption - per DS1	I		U1TD1, ULDD1,UNC1X	CCOSF		0.00									
	Clear Channel Capability (SF/ESF) Option - Subsequent Activity - per DS1	I		ULDD1, U1TD1, UNC1X, USL	NRCCC		184.85	23.81	1.99	0.7741						
	C-bit Parity Option - Subsequent Activity - per DS3	i		U1TD3, ULDD3, UE3, UNC3X	NRCC3		219.13	7.67	0.7355	0.00						
	DS1/DS0 Channel System			UNC1X	MQ1	107.19	91.04	62.57	10.54	9.79						
	DS3/DS1Channel System			UNC3X, UNCSX	MQ3	176.20	178.14	93.97	33.26	31.83						
	Voice Grade COCI in combination			UNCVX	1D1VG	0.56	6.58	4.72								
	Voice Grade COCI - for 2W-SL2 & 4W Voice Grade Local Loop			UEA	1D1VG	0.56	6.58	4.72								
	Voice Grade COCI - for connection to a channelized DS1 Local Channel in the same SWC as collocation			U1TUC	1D1VG	0.56	6.58	4.72								
	OCU-DP COCI (2.4-64kbs) in combination			UNCDX	1D1DD	2.41	6.58	4.72								
	OCU-DP COCI (2.4-64kbs) - for Unbundled Digital Loop			UDL	1D1DD	2.41	6.58	4.72								
	OCU-DP COCI (2.4-64kbs) - for connection to a channelized DS1 Local Channel in the same SWC as collocation			U1TUD	1D1DD	2.41	6.58	4.72								
	2-wire ISDN COCI (BRITE) in combination			UNCNX	UC1CA	1.19	6.58	4.72								

UNBUNDLED NETWORK ELEMENTS - Alabama																	Att: 2 Exh: A
CATEGORY		RATE ELEMENTS	Interim	Zone	BCS	USOC	RATES($)					Svc Order Submitted Elec per LSR	Svc Order Submitted Manually per LSR	Incremental Charge - Manual Svc Order vs. Electronic-1st	Incremental Charge - Manual Svc Order vs. Electronic-Add'l	Incremental Charge - Manual Svc Order vs. Electronic-Disc 1st	Incremental Charge - Manual Svc Order vs. Electronic-Disc Add'l
							Rec	Nonrecurring		Nonrecurring Disconnect		OSS Rates($)					
								First	Add'l	First	Add'l	SOMEC	SOMAN	SOMAN	SOMAN	SOMAN	SOMAN
		2-wire ISDN COCI (BRITE) - for a Local Loop			UDN	UC1CA	1.19	6.58	4.72								
		2-wire ISDN COCI (BRITE) - for connection to a channelized DS1 Local Channel in the same SWC as collocation			U1TUB	UC1CA	1.19	6.58	4.72								
		DS1 COCI in combination			UNC1X	UC1D1	13.47	6.58	4.72								
		DS1 COCI - for Stand Alone Local Channel			ULDD1	UC1D1	13.47	6.58	4.72								
		DS1 COCI - for Stand Alone Interoffice Channel			U1TD1	UC1D1	13.47	6.58	4.72								
		DS1 COCI - for DS1 Local Loop			USL, NTCD1	UC1D1	13.47	6.58	4.72								
		DS1 COCI - for connection to a channelized DS1 Local Channel in the same SWC as collocation			U1TUA	UC1D1	13.47	6.58	4.72								
		Wholesale - UNE, Switch-As-Is Conversion Charge			UNCVX, UNCDX, UNC1X, UNC3X, UNCSX, UDFCX, XDH1X, HFQC6, XDD2X, XDV6X, XDDFX, XDD4X, HFRST, UNCNX	UNCCC		5.59	5.59								
		Unbundled Misc Rate Element, SNE SAI, Single Network Element - Switch As Is Non-recurring Charge, per circuit (LSR)	I		U1TVX, U1TDX, U1TD1, U1TD3, U1TS1, UDF, UE3	URESL		5.59	5.59								
		Unbundled Misc Rate Element, SNE SAI, Single Network Element - Switch As Is Non-recurring Charge, incremental charge per circuit on a spreadsheet	i		U1TVX, U1TDX, U1TD1, U1TD3, U1TS1, UDF, UE3	URESP		5.59	5.59								
	Access to DCS - Customer Reconfiguration (FlexServ)																
		Customer Reconfiguration Establishment						1.48		1.84							
		DS1 DCS Termination with DS0 Switching					29.46	25.55	19.66	16.63	13.38						
		DS1 DCS Termination with DS1 Switching					9.94	18.47	12.58	12.21	8.96						
		DS3 DCS Termination with DS1 Switching					105.16	25.55	19.66	16.63	13.38						
	Node (SynchroNet)																
		Node per month			UNCDX	UNCNT	15.77										
	Service Rearrangements																
		NRC - Change in Facility Assignment per circuit Service Rearrangement	I		U1TVX, U1TDX, U1TUC, U1TUD, U1TUB, ULDVX, ULDDX, UNCVX, UNCDX, UNC1X	URETD		101.09	43.05								
		NRC - Change in Facility Assignment per circuit Project Management (added to CFA per circuit if project managed)	I		U1TVX, U1TDX, U1TUC, U1TUD, U1TUB, ULDVX, ULDDX, UNCVX, UNCDX, UNC1X	URETB		3.16	3.16								
		NRC - Order Coordination Specific Time - Dedicated Transport	I		UNC1X, UNC3X	OCOSR		18.93	18.93								
COMMINGLING																	
		Commingling Authorization			UNCVX, UNCDX, UNC1X, UNC3X, UNCSX, U1TD1, U1TD3, U1TS1, UE3, UDLSX, U1TVX, U1TDX, U1TUB, ULDVX, ULDD1, ULDD3, ULDS1	CMGAU	0.00	0.00	0.00	0.00	0.00						
	Commingled (UNE part of single bandwidth circuit)																
		Commingled VG COCI			XDV2X	1D1VG	0.56	6.58	4.72								
		Commingled Digital COCI			XDV6X	1D1DD	1.19	6.58	4.72								
		Commingled ISDN COCI			XDD4X	UC1CA	2.41	6.58	4.72								
		Commingled 2-wire VG Interoffice Channel			XDV2X	U1TV2	21.13	40.54	27.41	16.74	6.90						
		Commingled 4-wire VG Interoffice Channel			XDV6X	U1TV4	18.73	40.54	27.41	16.74	6.90						
		Commingled 56kbps Interoffice Channel			XDD4X	U1TD5	15.12	40.54	27.41	16.74	6.90						
		Commingled 64kbps Interoffice Channel			XDD4X	U1TD6	15.12	40.54	27.41	16.74	6.90						
		Commingled VG/DS0 Interoffice Channel Mileage			XDV2X, XDV6X, XDD4X	1L5XX	0.008838										
		Commingled 2-wire Local Loop Zone 1		1	XDV2X	UEAL2	14.38	88.00	55.00	47.24	7.44						
		Commingled 2-wire Local Loop Zone 2		2	XDV2X	UEAL2	22.85	88.00	55.00	47.24	7.44						
		Commingled 2-wire Local Loop Zone 3		3	XDV2X	UEAL2	36.14	88.00	55.00	47.24	7.44						

UNBUNDLED NETWORK ELEMENTS - Alabama

Att: 2 Exh: A

CATEGORY	RATE ELEMENTS	Interim	Zone	BCS	USOC	RATES($)					Svc Order Submitted Elec per LSR	Svc Order Submitted Manually per LSR	Incremental Charge - Manual Svc Order vs. Electronic-1st	Incremental Charge - Manual Svc Order vs. Electronic-Add'l	Incremental Charge - Manual Svc Order vs. Electronic-Disc 1st	Incremental Charge - Manual Svc Order vs. Electronic-Disc Add'l
						Rec	Nonrecurring		Nonrecurring Disconnect		OSS Rates($)					
							First	Add'l	First	Add'l	SOMEC	SOMAN	SOMAN	SOMAN	SOMAN	SOMAN
	Commingled 4-wire Local Loop Zone 1		1	XDV6X	UEAL4	25.34	131.97	94.51	59.14	14.50						
	Commingled 4-wire Local Loop Zone 2		2	XDV6X	UEAL4	38.58	131.97	94.51	59.14	14.50						
	Commingled 4-wire Local Loop Zone 3		3	XDV6X	UEAL4	60.02	131.97	94.51	59.14	14.50						
	Commingled 56kbps Local Loop Zone 1		1	XDD4X	UDL56	26.09	126.27	88.80	59.14	14.50						
	Commingled 56kbps Local Loop Zone 2		2	XDD4X	UDL56	35.95	126.27	88.80	59.14	14.50						
	Commingled 56kbps Local Loop Zone 3		3	XDD4X	UDL56	37.88	126.27	88.80	59.14	14.50						
	Commingled 64kbps Local Loop Zone 1		1	XDD4X	UDL64	26.09	126.27	88.80	59.14	14.50						
	Commingled 64kbps Local Loop Zone 2		2	XDD4X	UDL64	35.95	126.27	88.80	59.14	14.50						
	Commingled 64kbps Local Loop Zone 3		3	XDD4X	UDL64	37.88	126.27	88.80	59.14	14.50						
	Commingled ISDN Local Loop Zone 1		1	XDD4X	U1L2X	21.88	117.24	79.77	52.88	10.54						
	Commingled ISDN Local Loop Zone 2		2	XDD4X	U1L2X	32.85	117.24	79.77	52.88	10.54						
	Commingled ISDN Local Loop Zone 3		3	XDD4X	U1L2X	48.55	117.24	79.77	52.88	10.54						
	Commingled DS1 COCI			XDH1X	UC1D1	13.47	6.58	4.72								
	Commingled DS1 Interoffice Channel			XDH1X	U1TF1	60.16	89.27	81.81	16.35	14.44						
	Commingled DS1 Interoffice Channel Mileage			XDH1X	1L5XX	0.18										
	Commingled DS1/DS0 Channel System			XDH1X	MQ1	107.19	91.04	62.57	10.54	9.79						
	Commingled DS1 Local Loop Zone 1		1	XDH1X	USLXX	82.55	252.47	157.54	44.70	11.71						
	Commingled DS1 Local Loop Zone 2		2	XDH1X	USLXX	154.18	252.47	157.54	44.70	11.71						
	Commingled DS1 Local Loop Zone 3		3	XDH1X	USLXX	314.52	252.47	157.54	44.70	11.71						
	Commingled DS3 Local Loop			HFQC6	UE3PX	308.08	451.52	263.94	119.49	83.58						
	Commingled DS3/STS-1 Local Loop Mileage			HFQC6, HFRST	1L5ND	8.38										
	Commingled STS-1 Local Loop			HFRST	UDLS1	319.83	451.52	263.94	119.49	83.58						
	Commingled DS3/DS1 Channel System			HFQC6	MQ3	176.20	178.14	93.97	33.26	31.83						
	Commingled DS3 Interoffice Channel			HFQC6	U1TF3	703.52	278.75	162.76	60.20	58.46						
	Commingled DS3 Interoffice Channel Mileage			HFQC6	1L5XX	4.09										
	Commingled STS-1Interoffice Channel			HFRST	U1TFS	701.37	278.75	162.76	60.20	58.46						
	Commingled STS-1Interoffice Channel Mileage			HFRST	1L5XX	4.09										
	Commingled Dark Fiber - Interoffice Transport, Per Four Fiber Strands, Per Route Mile Or Fraction Thereof			HEQDL	1L5DF	22.34										
	Commingled Dark Fiber - Interoffice Transport, Per Four Fiber Strands, Per Route Mile Or Fraction Thereof			HEQDL	UDF14		639.09	137.87	317.06	197.66						
	UNE to Commingled Conversion Tracking			XDH1X, HFQC6	CMGUN	0.00	0.00	0.00	0.00	0.00						
	SPA to Commingled Conversion Tracking			XDH1X, HFQC6	CMGSP	0.00	0.00	0.00	0.00	0.00						
LNP Query Service																
	LNP Charge Per query					0.000757										
	LNP Service Establishment Manual						12.52		11.51							
	LNP Service Provisioning with Point Code Establishment						593.49	303.20	268.93	197.74						
911 PBX LOCATE																
	911 PBX LOCATE DATABASE CAPABILITY															
	Service Establishment per CLEC per End User Account			9PBDC	9PBEU		1,813.00									
	Changes to TN Range or Customer Profile			9PBDC	9PBTN		181.44									
	Per Telephone Number (Monthly)			9PBDC	9PBMM	0.07										
	Change Company (Service Provider) ID			9PBDC	9PBPC		532.60									
	PBX Locate Service Support per CLEC (Monthlt)			9PBDC	9PBMR	181.33										
	Service Order Charge			9PBDC	9PBSC		15.66									
	911 PBX LOCATE TRANSPORT COMPONENT															
	See Att 3															
	Note: Rates displaying an "I" in Interim column are interim as a result of a Commission order.															

UNBUNDLED NETWORK ELEMENTS - Florida																	Att: 2 Exh: A
CATEGORY		RATE ELEMENTS	Interim	Zone	BCS	USOC	RATES($)					Svc Order Submitted Elec per LSR	Svc Order Submitted Manually per LSR	Incremental Charge - Manual Svc Order vs. Electronic-1st	Incremental Charge - Manual Svc Order vs. Electronic-Add'l	Incremental Charge - Manual Svc Order vs. Electronic-Disc 1st	Incremental Charge - Manual Svc Order vs. Electronic-Disc Add'l
							Rec	Nonrecurring		Nonrecurring Disconnect		OSS Rates($)					
								First	Add'l	First	Add'l	SOMEC	SOMAN	SOMAN	SOMAN	SOMAN	SOMAN
	The "Zone" shown in the sections for stand-alone loops or loops as part of a combination refers to Geographically Deaveraged UNE Zones. To view Geographically Deaveraged UNE Zone Designations by Central Office, refer to internet Website: http://www.interconnection.bellsouth.com/become_a_clec/html/interconnection.htm																
OPERATIONS SUPPORT SYSTEMS (OSS) - "REGIONAL RATES"																	
	NOTE: (1) CLEC should contact its contract negotiator if it prefers the "state specific" OSS charges as ordered by the State Commissions. The OSS charges currently contained in this rate exhibit are the AT&T "regional" service ordering charges. CLEC may elect either the state specific Commission ordered rates for the service ordering charges, or CLEC may elect the regional service ordering charge, however, CLEC can not obtain a mixture of the two regardless if CLEC has a interconnection contract established in each of the 9 states.																
	NOTE: (2) Any element that can be ordered electronically will be billed according to the SOMEC rate listed in this category. Please refer to AT&T's Local Ordering Handbook (LOH) to determine if a product can be ordered electronically. For those elements that cannot be ordered electronically at present per the LOH, the listed SOMEC rate in this category reflects the charge that would be billed to a CLEC once electronic ordering capabilities come on-line for that element. Otherwise, the manual ordering charge, SOMAN, will be applied to a CLECs bill when it submits an LSR to AT&T.																
		OSS - Electronic Service Order Charge, Per Local Service Request (LSR) - UNE Only				SOMEC		3.50	0.00	3.50	0.00						
		OSS - Manual Service Order Charge, Per Local Service Request (LSR) - UNE Only				SOMAN		11.90	0.00	1.83	0.00						
UNE SERVICE DATE ADVANCEMENT CHARGE																	
	NOTE: The Expedite charge will be maintained commensurate with BellSouth's FCC No.1 Tariff, Section 5 as applicable.																
		UNE Expedite Charge per Circuit or Line Assignable USOC, per Day			UAL, UEANL, UCL, UEF, UDF, UEQ, UDL, UENTW, UDN, UEA, UHL, ULC, USL, U1T12, U1T48, U1TD1, U1TD3, U1TDX, U1TO3, U1TS1, U1TVX, UC1BC, UC1BL, UC1CC, UC1CL, UC1DC, UC1DL, UC1EC, UC1EL, UC1FC, UC1FL, UC1GC, UC1GL, UC1HC, UC1HL, UDL12, UDL48, UDLO3, UDLSX, UE3, ULD12, ULD48, ULDD1, ULDD3, ULDDX, ULDO3, ULDS1, ULDVX, UNC1X, UNC3X, UNCDX, UNCNX, UNCSX, UNCVX, UNLD1, UNLD3, UXTD1, UXTD3, UXTS1, U1TUC, U1TUD, U1TUB, U1TUA,NTCVG, NTCUD, NTCD1	SDASP		200.00									
ORDER MODIFICATION CHARGE																	
		Order Modification Charge (OMC)						26.21	0.00	0.00	0.00						
		Order Modification Additional Dispatch Charge (OMCAD)						150.00	0.00	0.00	0.00						
UNBUNDLED EXCHANGE ACCESS LOOP																	
	2-WIRE ANALOG VOICE GRADE LOOP																
		2-Wire Analog Voice Grade Loop - Service Level 1- Zone 1		1	UEANL	UEAL2	10.69	49.57	22.83	25.62	6.57						
		2-Wire Analog Voice Grade Loop - Service Level 1- Zone 2		2	UEANL	UEAL2	15.20	49.57	22.83	25.62	6.57						
		2-Wire Analog Voice Grade Loop - Service Level 1- Zone 3		3	UEANL	UEAL2	26.97	49.57	22.83	25.62	6.57						
		2-Wire Analog Voice Grade Loop - Service Level 1- Zone 1		1	UEANL	UEASL	10.69	49.57	22.83	25.62	6.57						
		2-Wire Analog Voice Grade Loop - Service Level 1- Zone 2		2	UEANL	UEASL	15.20	49.57	22.83	25.62	6.57						
		2-Wire Analog Voice Grade Loop - Service Level 1- Zone 3		3	UEANL	UEASL	26.97	49.57	22.83	25.62	6.57						
		Tag Loop at End User Premise			UEANL	URETL		8.93	0.88								
		Loop Testing - Basic 1st Half Hour			UEANL	URET1		77.09	0.00								
		Loop Testing - Basic Additional Half Hour			UEANL	URETA		33.12	33.12								
		Manual Order Coordination for UVL-SL1s (per loop)			UEANL	UEAMC		9.00	9.00								
		Order Coordination for Specified Conversion Time for UVL-SL1 (per LSR)			UEANL	OCOSL		23.02									

UNBUNDLED NETWORK ELEMENTS - Florida														Att: 2 Exh: A			
CATEGORY		RATE ELEMENTS	Interim	Zone	BCS	USOC	RATES($)					Svc Order Submitted Elec per LSR	Svc Order Submitted Manually per LSR	Incremental Charge - Manual Svc Order vs. Electronic-1st	Incremental Charge - Manual Svc Order vs. Electronic-Add'l	Incremental Charge - Manual Svc Order vs. Electronic-Disc 1st	Incremental Charge - Manual Svc Order vs. Electronic-Disc Add'l
							Rec	Nonrecurring		Nonrecurring Disconnect		OSS Rates($)					
								First	Add'l	First	Add'l	SOMEC	SOMAN	SOMAN	SOMAN	SOMAN	SOMAN
		Unbundled Non-Design Voice Loop, billing for AT&T providing make-up (Engineering Information - E.I.)			UEANL	UEANM		13.49									
		Unbundled Loop Service Rearrangement, change in loop facility, per circuit			UEANL	UREWO		15.78	8.94	25.62	6.57						
		Bulk Migration, per 2 Wire Voice Loop-SL1			UEANL	UREPN		49.57	22.83	25.62	6.57						
		Bulk Migration Order Coordination, per 2 Wire Voice Loop-SL1			UEANL	UREPM		9.00	9.00								
	2-WIRE Unbundled COPPER LOOP																
		2-Wire Unbundled Copper Loop - Non-Designed Zone 1		1	UEQ	UEQ2X	7.69	44.98	20.90	24.88	6.45						
		2 Wire Unbundled Copper Loop - Non-Designed - Zone 2		2	UEQ	UEQ2X	10.92	44.98	20.90	24.88	6.45						
		2 Wire Unbundled Copper Loop - Non-Designed - Zone 3		3	UEQ	UEQ2X	19.38	44.98	20.90	24.88	6.45						
		Tag Loop at End User Premise			UEQ	URETL		8.93	0.88								
		Loop Testing - Basic 1st Half Hour			UEQ	URET1		48.65	0.00								
		Loop Testing - Basic Additional Half Hour			UEQ	URETA		23.95	23.95								
		Manual Order Coordination 2 Wire Unbundled Copper Loop - Non-Designed (per loop)			UEQ	USBMC		9.00	9.00								
		Unbundled Copper Loop - Non-Design, billing for AT&T providing make-up (Engineering Information - E.I.)			UEQ	UEQMU		13.49									
		Unbundled Loop Service Rearrangement, change in loop facility, per circuit			UEQ	UREWO		14.27	7.43	24.88	6.45						
		Bulk Migration, per 2 Wire UCL-ND			UEQ	UREPN		44.98	20.90	24.88	6.45						
		Bulk Migration Order Coordination, per 2 Wire UCL-ND			UEQ	UREPM		9.00	9.00								
UNBUNDLED EXCHANGE ACCESS LOOP																	
	2-WIRE ANALOG VOICE GRADE LOOP																
		2-Wire Analog Voice Grade Loop - Service Level 2 w/Loop or Ground Start Signaling - Zone 1		1	UEA	UEAL2	12.24	135.75	82.47	63.53	12.01						
		2-Wire Analog Voice Grade Loop - Service Level 2 w/Loop or Ground Start Signaling - Zone 2		2	UEA	UEAL2	17.40	135.75	82.47	63.53	12.01						
		2-Wire Analog Voice Grade Loop - Service Level 2 w/Loop or Ground Start Signaling - Zone 3		3	UEA	UEAL2	30.87	135.75	82.47	63.53	12.01						
		2-Wire Analog Voice Grade Loop - Service Level 2 w/Reverse Battery Signaling - Zone 1		1	UEA	UEAR2	12.24	135.75	82.47	63.53	12.01						
		2-Wire Analog Voice Grade Loop - Service Level 2 w/Reverse Battery Signaling - Zone 2		2	UEA	UEAR2	17.40	135.75	82.47	63.53	12.01						
		2-Wire Analog Voice Grade Loop - Service Level 2 w/Reverse Battery Signaling - Zone 3		3	UEA	UEAR2	30.87	135.75	82.47	63.53	12.01						
		Switch-As-Is Conversion rate per UNE Loop, Single LSR, (per DS0)			UEA	URESL		8.98	8.98								
		Switch-As-Is Conversion rate per UNE Loop, Spreadsheet, (per DS0)			UEA	URESP		8.98	8.98								
		Unbundled Loop Service Rearrangement, change in loop facility, per circuit			UEA	UREWO		87.71	36.35								
		Loop Tagging - Service Level 2 (SL2)			UEA	URETL		11.21	1.10								
		Bulk Migration, per 2 Wire Voice Loop-SL2			UEA	UREPN		135.75	82.47								
		Bulk Migration Order Coordination, per 2 Wire Voice Loop-SL2			UEA	UREPM		0.00	0.00								
	4-WIRE ANALOG VOICE GRADE LOOP																
		4-Wire Analog Voice Grade Loop - Zone 1		1	UEA	UEAL4	18.89	167.86	115.15	67.08	15.56						
		4-Wire Analog Voice Grade Loop - Zone 2		2	UEA	UEAL4	26.84	167.86	115.15	67.08	15.56						
		4-Wire Analog Voice Grade Loop - Zone 3		3	UEA	UEAL4	47.62	167.86	115.15	67.08	15.56						
		Switch-As-Is Conversion rate per UNE Loop, Single LSR, (per DS0)			UEA	URESL		8.98	8.98								
		Switch-As-Is Conversion rate per UNE Loop, Spreadsheet, (per DS0)			UEA	URESP		8.98	8.98								
		Unbundled Loop Service Rearrangement, change in loop facility, per circuit			UEA	UREWO		87.71	36.35								
	2-WIRE ISDN DIGITAL GRADE LOOP																
		2-Wire ISDN Digital Grade Loop - Zone 1		1	UDN	U1L2X	19.28	147.69	94.41	62.23	10.71						
		2-Wire ISDN Digital Grade Loop - Zone 2		2	UDN	U1L2X	27.40	147.69	94.41	62.23	10.71						
		2-Wire ISDN Digital Grade Loop - Zone 3		3	UDN	U1L2X	48.62	147.69	94.41	62.23	10.71						
		Unbundled Loop Service Rearrangement, change in loop facility, per circuit			UDN	UREWO		91.61	44.15								
	2-WIRE ASYMMETRICAL DIGITAL SUBSCRIBER LINE (ADSL) COMPATIBLE LOOP																
		2 Wire Unbundled ADSL Loop including manual service inquiry & facility reservation - Zone 1		1	UAL	UAL2X	8.30	149.53	103.85	75.05	15.63						

CATEGORY	RATE ELEMENTS	Interim	Zone	BCS	USOC	RATES($)					Svc Order Submitted Elec per LSR	Svc Order Submitted Manually per LSR	Incremental Charge - Manual Svc Order vs. Electronic-1st	Incremental Charge - Manual Svc Order vs. Electronic-Add'l	Incremental Charge - Manual Svc Order vs. Electronic-Disc 1st	Incremental Charge - Manual Svc Order vs. Electronic-Disc Add'l
						Rec	Nonrecurring		Nonrecurring Disconnect		OSS Rates($)					
							First	Add'l	First	Add'l	SOMEC	SOMAN	SOMAN	SOMAN	SOMAN	SOMAN
	2 Wire Unbundled ADSL Loop including manual service inquiry & facility reservation - Zone 2		2	UAL	UAL2X	11.80	149.53	103.85	75.05	15.63						
	2 Wire Unbundled ADSL Loop including manual service inquiry & facility reservation - Zone 3		3	UAL	UAL2X	20.94	149.53	103.85	75.05	15.63						
	2 Wire Unbundled ADSL Loop without manual service inquiry & facility reservaton - Zone 1		1	UAL	UAL2W	8.30	124.83	71.12	60.64	9.12						
	2 Wire Unbundled ADSL Loop without manual service inquiry & facility reservaton - Zone 2		2	UAL	UAL2W	11.80	124.83	71.12	60.64	9.12						
	2 Wire Unbundled ADSL Loop without manual service inquiry & facility reservaton - Zone 3		3	UAL	UAL2W	20.94	124.83	71.12	60.64	9.12						
	Unbundled Loop Service Rearrangement, change in loop facility, per circuit			UAL	UREWO		86.19	40.39								
	2-WIRE HIGH BIT RATE DIGITAL SUBSCRIBER LINE (HDSL) COMPATIBLE LOOP															
	2 Wire Unbundled HDSL Loop including manual service inquiry & facility reservation - Zone 1		1	UHL	UHL2X	7.22	159.09	113.41	75.05	15.63						
	2 Wire Unbundled HDSL Loop including manual service inquiry & facility reservation - Zone 2		2	UHL	UHL2X	10.26	159.09	113.41	75.05	15.63						
	2 Wire Unbundled HDSL Loop including manual service inquiry & facility reservation - Zone 3		3	UHL	UHL2X	18.21	159.09	113.41	75.05	15.63						
	2 Wire Unbundled HDSL Loop without manual service inquiry and facility reservation - Zone 1		1	UHL	UHL2W	7.22	134.40	80.69	60.64	9.12						
	2 Wire Unbundled HDSL Loop without manual service inquiry and facility reservation - Zone 2		2	UHL	UHL2W	10.26	134.40	80.69	60.64	9.12						
	2 Wire Unbundled HDSL Loop without manual service inquiry and facility reservation - Zone 3		3	UHL	UHL2W	18.21	134.40	80.69	60.64	9.12						
	Unbundled Loop Service Rearrangement, change in loop facility, per circuit			UHL	UREWO		86.12	40.39								
	4-WIRE HIGH BIT RATE DIGITAL SUBSCRIBER LINE (HDSL) COMPATIBLE LOOP															
	4 Wire Unbundled HDSL Loop including manual service inquiry and facility reservation - Zone 1		1	UHL	UHL4X	10.86	193.31	138.98	77.15	12.61						
	4-Wire Unbundled HDSL Loop including manual service inquiry and facility reservation - Zone 2		2	UHL	UHL4X	15.44	193.31	138.98	77.15	12.61						
	4-Wire Unbundled HDSL Loop including manual service inquiry and facility reservation - Zone 3		3	UHL	UHL4X	27.39	193.31	138.98	77.15	12.61						
	4-Wire Unbundled HDSL Loop without manual service inquiry and facility reservation - Zone 1		1	UHL	UHL4W	10.86	168.62	115.47	62.74	11.22						
	4-Wire Unbundled HDSL Loop without manual service inquiry and facility reservation - Zone 2		2	UHL	UHL4W	15.44	168.62	115.47	62.74	11.22						
	4-Wire Unbundled HDSL Loop without manual service inquiry and facility reservation - Zone 3		3	UHL	UHL4W	27.39	168.62	115.47	62.74	11.22						
	Unbundled Loop Service Rearrangement, change in loop facility, per circuit			UHL	UREWO		86.12	40.39								
	4-WIRE DS1 DIGITAL LOOP															
	4-Wire DS1 Digital Loop - Zone 1		1	USL	USLXX	70.74	313.75	181.48	61.22	13.53						
	4-Wire DS1 Digital Loop - Zone 2		2	USL	USLXX	100.54	313.75	181.48	61.22	13.53						
	4-Wire DS1 Digital Loop - Zone 3		3	USL	USLXX	178.39	313.75	181.48	61.22	13.53						
	Switch-As-Is Conversion rate per UNE Loop, Single LSR, (per DS1)			USL	URESL		8.98	8.98								
	Switch-As-Is Conversion rate per UNE Loop, Spreadsheet, (per DS1)			USL	URESP		8.98	8.98								
	Unbundled Loop Service Rearrangement, change in loop facility, per circuit			USL	UREWO		101.07	43.04								
	4-WIRE 19.2, 56 OR 64 KBPS DIGITAL GRADE LOOP															
	4 Wire Unbundled Digital Loop 2.4 Kbps - Zone 1		1	UDL	UDL2X	22.20	161.56	108.85	67.08	15.56						
	4 Wire Unbundled Digital Loop 2.4 Kbps - Zone 2		2	UDL	UDL2X	31.56	161.56	108.85	67.08	15.56						
	4 Wire Unbundled Digital Loop 2.4 Kbps - Zone 3		3	UDL	UDL2X	55.99	161.56	108.85	67.08	15.56						
	4 Wire Unbundled Digital Loop 4.8 Kbps - Zone 1		1	UDL	UDL4X	22.20	161.56	108.85	67.08	15.56						
	4 Wire Unbundled Digital Loop 4.8 Kbps - Zone 2		2	UDL	UDL4X	31.56	161.56	108.85	67.08	15.56						
	4 Wire Unbundled Digital Loop 4.8 Kbps - Zone 3		3	UDL	UDL4X	55.99	161.56	108.85	67.08	15.56						
	4 Wire Unbundled Digital Loop 9.6 Kbps - Zone 1		1	UDL	UDL9X	22.20	161.56	108.85	67.08	15.56						
	4 Wire Unbundled Digital Loop 9.6 Kbps - Zone 2		2	UDL	UDL9X	31.56	161.56	108.85	67.08	15.56						
	4 Wire Unbundled Digital Loop 9.6 Kbps - Zone 3		3	UDL	UDL9X	55.99	161.56	108.85	67.08	15.56						
	4 Wire Unbundled Digital 19.2 Kbps - Zone 1		1	UDL	UDL19	22.20	161.56	108.85	67.08	15.56						
	4 Wire Unbundled Digital 19.2 Kbps - Zone 2		2	UDL	UDL19	31.56	161.56	108.85	67.08	15.56						

UNBUNDLED NETWORK ELEMENTS - Florida																	Att: 2 Exh: A
CATEGORY		RATE ELEMENTS	Interim	Zone	BCS	USOC	RATES($)					Svc Order Submitted Elec per LSR	Svc Order Submitted Manually per LSR	Incremental Charge - Manual Svc Order vs. Electronic-1st	Incremental Charge - Manual Svc Order vs. Electronic-Add'l	Incremental Charge - Manual Svc Order vs. Electronic-Disc 1st	Incremental Charge - Manual Svc Order vs. Electronic-Disc Add'l
							Rec	Nonrecurring		Nonrecurring Disconnect		OSS Rates($)					
								First	Add'l	First	Add'l	SOMEC	SOMAN	SOMAN	SOMAN	SOMAN	SOMAN
		4 Wire Unbundled Digital 19.2 Kbps - Zone 3		3	UDL	UDL19	55.99	161.56	108.85	67.08	15.56						
		4 Wire Unbundled Digital Loop 56 Kbps - Zone 1		1	UDL	UDL56	22.20	161.56	108.85	67.08	15.56						
		4 Wire Unbundled Digital Loop 56 Kbps - Zone 2		2	UDL	UDL56	31.56	161.56	108.85	67.08	15.56						
		4 Wire Unbundled Digital Loop 56 Kbps - Zone 3		3	UDL	UDL56	55.99	161.56	108.85	67.08	15.56						
		4 Wire Unbundled Digital Loop 64 Kbps - Zone 1		1	UDL	UDL64	22.20	161.56	108.85	67.08	15.56						
		4 Wire Unbundled Digital Loop 64 Kbps - Zone 2		2	UDL	UDL64	31.56	161.56	108.85	67.08	15.56						
		4 Wire Unbundled Digital Loop 64 Kbps - Zone 3		3	UDL	UDL64	55.99	161.56	108.85	67.08	15.56						
		Switch-As-Is Conversion rate per UNE Loop, Single LSR, (per DS0)			UDL	URESL		8.98	8.98								
		Switch-As-Is Conversion rate per UNE Loop, Spreadsheet, (per DS0)			UDL	URESP		8.98	8.98								
		Unbundled Loop Service Rearrangement, change in loop facility, per circuit			UDL	UREWO		102.11	49.74								
	2-WIRE Unbundled COPPER LOOP																
		2-Wire Unbundled Copper Loop-Designed including manual service inquiry & facility reservation - Zone 1		1	UCL	UCLPB	8.30	148.50	102.82	75.05	15.63						
		2-Wire Unbundled Copper Loop-Designed including manual service inquiry & facility reservation - Zone 2		2	UCL	UCLPB	11.80	148.50	102.82	75.05	15.63						
		2 Wire Unbundled Copper Loop-Designed including manual service inquiry & facility reservation - Zone 3		3	UCL	UCLPB	20.94	148.50	102.82	75.05	15.63						
		2-Wire Unbundled Copper Loop-Designed without manual service inquiry and facility reservation - Zone 1		1	UCL	UCLPW	8.30	123.81	70.09	60.64	9.12						
		2-Wire Unbundled Copper Loop-Designed without manual service inquiry and facility reservation - Zone 2		2	UCL	UCLPW	11.80	123.81	70.09	60.64	9.12						
		2-Wire Unbundled Copper Loop-Designed without manual service inquiry and facility reservation - Zone 3		3	UCL	UCLPW	20.94	123.81	70.09	60.64	9.12						
		CLEC to CLEC Conversion Charge without outside dispatch (UCL -Des)			UCL	UREWO		97.21	42.47								
		Unbundled Loop Service Rearrangement, change in loop facility, per circuit			UCL	UCLMC		9.00	9.00								
	4-WIRE COPPER LOOP																
		4-Wire Copper Loop-Designed including manual service inquiry and facility reservation - Zone 1		1	UCL	UCL4S	11.83	177.87	132.76	77.15	17.73						
		4-Wire Copper Loop-Designed including manual service inquiry and facility reservation - Zone 2		2	UCL	UCL4S	16.81	177.87	132.76	77.15	17.73						
		4-Wire Copper Loop-Designed including manual service inquiry and facility reservation - Zone 3		3	UCL	UCL4S	29.82	177.87	132.76	77.15	17.73						
		4-Wire Copper Loop-Designed without manual service inquiry and facility reservation - Zone 1		1	UCL	UCL4W	11.83	153.18	100.03	62.74	11.22						
		4-Wire Copper Loop-Designed without manual service inquiry and facility reservation - Zone 2		2	UCL	UCL4W	16.81	153.18	100.03	62.74	11.22						
		4-Wire Copper Loop-Designed without manual service inquiry and facility reservation - Zone 3		3	UCL	UCL4W	29.82	153.18	100.03	62.74	11.22						
		Order Coordination for Unbundled Copper Loops (per loop)			UCL	UCLMC		9.00	9.00								
		Unbundled Loop Service Rearrangement, change in loop facility, per circuit			UCL	UREWO		97.21	42.47								
		Order Coordination for Specified Conversion Time (per LSR)			UEA, UDN, UAL, UHL, UDL,USL	OCOSL		23.02									
	Rearrangements																
		EEL to UNE-L Retermination, per 2 Wire Unbundled Voice Loop-SL2			UEA	UREEL		87.71	36.35								
		EEL to UNE-L Retermination, per 4 Wire Unbundled Voice Loop			UEA	UREEL		87.71	36.35								
		EEL to UNE-L Retermination, per 2 Wire ISDN Loop			UDN	UREEL		91.61	44.15								
		EEL to UNE-L Retermination, per 4 Wire Unbundled Digital Loop			UDL	UREEL		102.11	49.74								
		EEL to UNE-L Retermination, per 4 Wire Unbundled DS1 Loop			USL	UREEL		101.07	43.04								
UNE LOOP COMMINGLING																	
	2-WIRE ANALOG VOICE GRADE LOOP - COMMINGLING																
		2-Wire Analog Voice Grade Loop - Service Level 2 w/Loop or Ground Start Signaling - Zone 1		1	NTCVG	UEAL2	12.24	135.75	82.47	63.53	12.01						
		2-Wire Analog Voice Grade Loop - Service Level 2 w/Loop or Ground Start Signaling - Zone 2		2	NTCVG	UEAL2	17.40	135.75	82.47	63.53	12.01						

UNBUNDLED NETWORK ELEMENTS - Florida																	Att: 2 Exh: A
CATEGORY		RATE ELEMENTS	Interim	Zone	BCS	USOC	RATES($)					Svc Order Submitted Elec per LSR	Svc Order Submitted Manually per LSR	Incremental Charge - Manual Svc Order vs. Electronic-1st	Incremental Charge - Manual Svc Order vs. Electronic-Add'l	Incremental Charge - Manual Svc Order vs. Electronic-Disc 1st	Incremental Charge - Manual Svc Order vs. Electronic-Disc Add'l
							Rec	Nonrecurring		Nonrecurring Disconnect		OSS Rates($)					
								First	Add'l	First	Add'l	SOMEC	SOMAN	SOMAN	SOMAN	SOMAN	SOMAN
		2-Wire Analog Voice Grade Loop - Service Level 2 w/Loop or Ground Start Signaling - Zone 3		3	NTCVG	UEAL2	30.87	135.75	82.47	63.53	12.01						
		2-Wire Analog Voice Grade Loop - Service Level 2 w/Reverse Battery Signaling - Zone 1		1	NTCVG	UEAR2	12.24	135.75	82.47	63.53	12.01						
		2-Wire Analog Voice Grade Loop - Service Level 2 w/Reverse Battery Signaling - Zone 2		2	NTCVG	UEAR2	17.40	135.75	82.47	63.53	12.01						
		2-Wire Analog Voice Grade Loop - Service Level 2 w/Reverse Battery Signaling - Zone 3		3	NTCVG	UEAR2	30.87	135.75	82.47	63.53	12.01						
		Switch-As-Is Conversion rate per UNE Loop, Single LSR, (per DS0)			NTCVG	URESL		8.98	8.98								
		Switch-As-Is Conversion rate per UNE Loop, Spreadsheet, (per DS0)			NTCVG	URESP		8.98	8.98								
		Unbundled Loop Service Rearrangement, change in loop facility, per circuit			NTCVG	UREWO		87.71	36.35								
		Loop Tagging - Service Level 2 (SL2)			NTCVG	URETL		11.21	1.10								
	4-WIRE ANALOG VOICE GRADE LOOP - COMMINGLING																
		4-Wire Analog Voice Grade Loop - Zone 1		1	NTCVG	UEAL4	18.89	167.86	115.15	67.08	15.56						
		4-Wire Analog Voice Grade Loop - Zone 2		2	NTCVG	UEAL4	26.84	167.86	115.15	67.08	15.56						
		4-Wire Analog Voice Grade Loop - Zone 3		3	NTCVG	UEAL4	47.62	167.86	115.15	67.08	15.56						
		Switch-As-Is Conversion rate per UNE Loop, Single LSR, (per DS0)			NTCVG	URESL		8.98	8.98								
		Switch-As-Is Conversion rate per UNE Loop, Spreadsheet, (per DS0)			NTCVG	URESP		8.98	8.98								
		Unbundled Loop Service Rearrangement, change in loop facility, per circuit			NTCVG	UREWO		87.71	36.35								
	4-WIRE DS1 DIGITAL LOOP - COMMINGLING																
		4-Wire DS1 Digital Loop - Zone 1		1	NTCD1	USLXX	70.74	313.75	181.48	61.22	13.53						
		4-Wire DS1 Digital Loop - Zone 2		2	NTCD1	USLXX	100.54	313.75	181.48	61.22	13.53						
		4-Wire DS1 Digital Loop - Zone 3		3	NTCD1	USLXX	178.39	313.75	181.48	61.22	13.53						
		Switch-As-Is Conversion rate per UNE Loop, Single LSR, (per DS1)			NTCD1	URESL		8.98	8.98								
		Switch-As-Is Conversion rate per UNE Loop, Spreadsheet, (per DS1)			NTCD1	URESP		8.98	8.98								
		Unbundled Loop Service Rearrangement, change in loop facility, per circuit			NTCD1	UREWO		101.07	43.04								
	4-WIRE 19.2, 56 OR 64 KBPS DIGITAL GRADE LOOP - COMMINGLING																
		3 Wire Unbundled Digital Loop 2.4 Kbps - Zone 1		1	NTCUD	UDL2X	22.20	161.56	108.85	67.08	15.56						
		4 Wire Unbundled Digital Loop 2.4 Kbps - Zone 2		2	NTCUD	UDL2X	31.56	161.56	108.85	67.08	15.56						
		4 Wire Unbundled Digital Loop 2.4 Kbps - Zone 3		3	NTCUD	UDL2X	55.99	161.56	108.85	67.08	15.56						
		4 Wire Unbundled Digital Loop 4.8 Kbps - Zone 1		1	NTCUD	UDL4X	22.20	161.56	108.85	67.08	15.56						
		4 Wire Unbundled Digital Loop 4.8 Kbps - Zone 2		2	NTCUD	UDL4X	31.56	161.56	108.85	67.08	15.56						
		4 Wire Unbundled Digital Loop 4.8 Kbps - Zone 3		3	NTCUD	UDL4X	55.99	161.56	108.85	67.08	15.56						
		4 Wire Unbundled Digital Loop 9.6 Kbps - Zone 1		1	NTCUD	UDL9X	22.20	161.56	108.85	67.08	15.56						
		4 Wire Unbundled Digital Loop 9.6 Kbps - Zone 2		2	NTCUD	UDL9X	31.56	161.56	108.85	67.08	15.56						
		4 Wire Unbundled Digital Loop 9.6 Kbps - Zone 3		3	NTCUD	UDL9X	55.99	161.56	108.85	67.08	15.56						
		4 Wire Unbundled Digital 19.2 Kbps - Zone 1		1	NTCUD	UDL19	22.20	161.56	108.85	67.08	15.56						
		4 Wire Unbundled Digital 19.2 Kbps - Zone 2		2	NTCUD	UDL19	31.56	161.56	108.85	67.08	15.56						
		4 Wire Unbundled Digital 19.2 Kbps - Zone 3		3	NTCUD	UDL19	55.99	161.56	108.85	67.08	15.56						
		4 Wire Unbundled Digital Loop 56 Kbps - Zone 1		1	NTCUD	UDL56	22.20	161.56	108.85	67.08	15.56						
		4 Wire Unbundled Digital Loop 56 Kbps - Zone 2		2	NTCUD	UDL56	31.56	161.56	108.85	67.08	15.56						
		4 Wire Unbundled Digital Loop 56 Kbps - Zone 3		3	NTCUD	UDL56	55.99	161.56	108.85	67.08	15.56						
		4 Wire Unbundled Digital Loop 64 Kbps - Zone 1		1	NTCUD	UDL64	22.20	161.56	108.85	67.08	15.56						
		4 Wire Unbundled Digital Loop 64 Kbps - Zone 2		2	NTCUD	UDL64	31.56	161.56	108.85	67.08	15.56						
		4 Wire Unbundled Digital Loop 64 Kbps - Zone 3		3	NTCUD	UDL64	55.99	161.56	108.85	67.08	15.56						
		Switch-As-Is Conversion rate per UNE Loop, Single LSR, (per DS0)			NTCUD	URESL		8.98	8.98								
		Switch-As-Is Conversion rate per UNE Loop, Spreadsheet, (per DS0)			NTCUD	URESP		8.98	8.98								
		Unbundled Loop Service Rearrangement, change in loop facility, per circuit			NTCUD	UREWO		102.11	49.74								
		Order Coordination for Specified Conversion Time (per LSR)			NTCVG, NTCUD, NTCD1	OCOSL		23.02									
MAINTENANCE OF SERVICE																	

UNBUNDLED NETWORK ELEMENTS - Florida																	Att: 2 Exh: A
CATEGORY		RATE ELEMENTS	Interim	Zone	BCS	USOC	RATES($)					Svc Order Submitted Elec per LSR	Svc Order Submitted Manually per LSR	Incremental Charge - Manual Svc Order vs. Electronic-1st	Incremental Charge - Manual Svc Order vs. Electronic-Add'l	Incremental Charge - Manual Svc Order vs. Electronic-Disc 1st	Incremental Charge - Manual Svc Order vs. Electronic-Disc Add'l
							Rec	Nonrecurring		Nonrecurring Disconnect		OSS Rates($)					
								First	Add'l	First	Add'l	SOMEC	SOMAN	SOMAN	SOMAN	SOMAN	SOMAN
		Maintenance of Service Charge, Basic Time, per half hour			UDC, UEA, UDL, UDN, USL, UAL, UHL, UCL, NTCVG, NTCUD, NTCD1, U1TD1, U1TD3, U1TDX, U1TS1, U1TVX, UDF, UDFCX, UDLSX, UE3, ULDD1, ULDD3, ULDDX, ULDS1, ULDVX, UNC1X, UNC3X, UNCDX, UNCSX, UNCVX, ULS	MVVBT		80.00	55.00								
		Maintenance of Service Charge, Overtime, per half hour			UDC, UEA, UDL, UDN, USL, UAL, UHL, UCL, NTCVG, NTCUD, NTCD1, U1TD1, U1TD3, U1TDX, U1TS1, U1TVX, UDF, UDFCX, UDLSX, UE3, ULDD1, ULDD3, ULDDX, ULDS1, ULDVX, UNC1X, UNC3X, UNCDX, UNCSX, UNCVX, ULS	MVVOT		90.00	65.00								
		Maintenance of Service Charge, Premium, per half hour			UDC, UEA, UDL, UDN, USL, UAL, UHL, UCL, NTCVG, NTCUD, NTCD1, U1TD1, U1TD3, U1TDX, U1TS1, U1TVX, UDF, UDFCX, UDLSX, UE3, ULDD1, ULDD3, ULDDX, ULDS1, ULDVX, UNC1X, UNC3X, UNCDX, UNCSX, UNCVX, ULS	MVVPT		100.00	75.00								
LOOP MODIFICATION																	
		Unbundled Loop Modification, Removal of Load Coils - 2 Wire pair less than or equal to 18k ft, per Unbundled Loop			UAL, UHL, UCL, UEQ, ULS, UEA, UEANL, UEPSR, UEPSB	ULM2L		0.00	0.00								
		Unbundled Loop Modification Removal of Load Coils - 4 Wire less than or equal to 18K ft, per Unbundled Loop			UHL, UCL, UEA	ULM4L		0.00	0.00								
		Unbundled Loop Modification Removal of Bridged Tap Removal, per unbundled loop			UAL, UHL, UCL, UEQ, ULS, UEA, UEANL, UEPSR, UEPSB	ULMBT		10.52	10.52								
SUB-LOOPS																	
	Sub-Loop Distribution																
		Sub-Loop - Per Cross Box Location - CLEC Feeder Facility Set-Up			UEANL, UEF	USBSA		487.23									
		Sub-Loop - Per Cross Box Location - Per 25 Pair Panel Set-Up			UEANL, UEF	USBSB		6.25									
		Sub-Loop - Per Building Equipment Room - CLEC Feeder Facility Set-Up			UEANL	USBSC		169.25									
		Sub-Loop - Per Building Equipment Room - Per 25 Pair Panel Set-Up			UEANL	USBSD		38.65									

UNBUNDLED NETWORK ELEMENTS - Florida																	Att: 2 Exh: A
CATEGORY		RATE ELEMENTS	Interim	Zone	BCS	USOC	RATES($)					Svc Order Submitted Elec per LSR	Svc Order Submitted Manually per LSR	Incremental Charge - Manual Svc Order vs. Electronic-1st	Incremental Charge - Manual Svc Order vs. Electronic-Add'l	Incremental Charge - Manual Svc Order vs. Electronic-Disc 1st	Incremental Charge - Manual Svc Order vs. Electronic-Disc Add'l
							Rec	Nonrecurring		Nonrecurring Disconnect		OSS Rates($)					
								First	Add'l	First	Add'l	SOMEC	SOMAN	SOMAN	SOMAN	SOMAN	SOMAN
		Sub-Loop Distribution Per 2-Wire Analog Voice Grade Loop - Zone 1		1	UEANL	USBN2	6.46	60.19	21.78	47.50	5.26						
		Sub-Loop Distribution Per 2-Wire Analog Voice Grade Loop - Zone 2		2	UEANL	USBN2	9.18	60.19	21.78	47.50	5.26						
		Sub-Loop Distribution Per 2-Wire Analog Voice Grade Loop - Zone 3		3	UEANL	USBN2	16.29	60.19	21.78	47.50	5.26						
		Order Coordination for Unbundled Sub-Loops, per sub-loop pair			UEANL	USBMC		9.00	9.00								
		Sub-Loop Distribution Per 4-Wire Analog Voice Grade Loop - Zone 1		1	UEANL	USBN4	7.37	68.83	30.42	49.71	6.60						
		Sub-Loop Distribution Per 4-Wire Analog Voice Grade Loop - Zone 2		2	UEANL	USBN4	10.47	68.83	30.42	49.71	6.60						
		Sub-Loop Distribution Per 4-Wire Analog Voice Grade Loop - Zone 3		3	UEANL	USBN4	18.58	68.83	30.42	49.71	6.60						
		Order Coordination for Unbundled Sub-Loops, per sub-loop pair			UEANL	USBMC		9.00	9.00								
		Sub-Loop 2-Wire Intrabuilding Network Cable (INC)			UEANL	USBR2	3.96	51.84	13.44	47.50	5.26						
		Order Coordination for Unbundled Sub-Loops, per sub-loop pair			UEANL	USBMC		9.00	9.00								
		Sub-Loop 4-Wire Intrabuilding Network Cable (INC)			UEANL	USBR4	9.37	55.91	17.51	49.71	6.60						
		Order Coordination for Unbundled Sub-Loops, per sub-loop pair			UEANL	USBMC		9.00	9.00								
		Loop Testing - Basic 1st Half Hour			UEANL	URET1		77.09	0.00								
		Loop Testing - Basic Additional Half Hour			UEANL	URETA		33.12	33.12								
		2 Wire Copper Unbundled Sub-Loop Distribution - Zone 1		1	UEF	UCS2X	5.15	60.19	21.78	47.50	5.26						
		2 Wire Copper Unbundled Sub-Loop Distribution - Zone 2		2	UEF	UCS2X	7.31	60.19	21.78	47.50	5.26						
		2 Wire Copper Unbundled Sub-Loop Distribution - Zone 3		3	UEF	UCS2X	12.98	60.19	21.78	47.50	5.26						
		Order Coordination for Unbundled Sub-Loops, per sub-loop pair			UEF	USBMC		9.00	9.00								
		4 Wire Copper Unbundled Sub-Loop Distribution - Zone 1		1	UEF	UCS4X	5.36	68.83	30.42	49.71	6.60						
		4 Wire Copper Unbundled Sub-Loop Distribution - Zone 2		2	UEF	UCS4X	7.61	68.83	30.42	49.71	6.60						
		4 Wire Copper Unbundled Sub-Loop Distribution - Zone 3		3	UEF	UCS4X	13.51	68.83	30.42	49.71	6.60						
		Order Coordination for Unbundled Sub-Loops, per sub-loop pair			UEF	USBMC		9.00	9.00								
		Loop Tagging Service Level 1, Unbundled Copper Loop, Non-Designed and Distribution Subloops			UEF, UEANL	URETL		8.93	0.88								
		Loop Testing - Basic 1st Half Hour			UEF	URET1		48.65	0.00								
		Loop Testing - Basic Additional Half Hour			UEF	URETA		23.95	23.95								
	Unbundled Sub-Loop Modification																
		Unbundled Sub-Loop Modification - 2-W Copper Dist Load Coil/Equip Removal per 2-W PR			UEF	ULM2X		10.11	10.11								
		Unbundled Sub-loop Modification - 4-W Copper Dist Load Coil/Equip Removal per 4-W PR			UEF	ULM4X		10.11	10.11								
		Unbundled Loop Modification, Removal of Bridge Tap, per unbundled loop			UEF	ULMBT		15.58	15.58								
	Unbundled Network Terminating Wire (UNTW)																
		Unbundled Network Terminating Wire (UNTW) per Pair			UENTW	UENPP	0.4572	18.02									
	Network Interface Device (NID)																
		Network Interface Device (NID) - 1-2 lines			UENTW	UND12		71.49	48.87								
		Network Interface Device (NID) - 1-6 lines			UENTW	UND16		113.89	89.07								
		Network Interface Device Cross Connect - 2 W			UENTW	UNDC2		7.63	7.63								
		Network Interface Device Cross Connect - 4W			UENTW	UNDC4		7.63	7.63								
UNE OTHER, PROVISIONING ONLY - NO RATE																	
		Unbundled Contact Name, Provisioning Only - no rate			UAL, UCL, UDC, UDL, UDN, UEA, UHL, UEANL, UEF, UEQ, UENTW, NTCVG, NTCUD, NTCD1, USL	UNECN	0.00	0.00									
		Unbundled DS1 Loop - Superframe Format Option - no rate			USL, NTCD1	CCOSF		0.00									
		Unbundled DS1 Loop - Expanded Superframe Format option - no rate			USL, NTCD1	CCOEF		0.00									
		NID - Dispatch and Service Order for NID installation			UENTW	UNDBX	0.00	0.00									
		UNTW Circuit Establishment, Provisioning Only - No Rate			UENTW	UENCE	0.00	0.00									

UNBUNDLED NETWORK ELEMENTS - Florida

Att: 2 Exh: A

CATEGORY	RATE ELEMENTS	Interim	Zone	BCS	USOC	RATES($) Rec	Nonrecurring First	Nonrecurring Add'l	Nonrecurring Disconnect First	Nonrecurring Disconnect Add'l	Svc Order Submitted Elec per LSR	Svc Order Submitted Manually per LSR	Incremental Charge - Manual Svc Order vs. Electronic-1st	Incremental Charge - Manual Svc Order vs. Electronic-Add'l	Incremental Charge - Manual Svc Order vs. Electronic-Disc 1st	Incremental Charge - Manual Svc Order vs. Electronic-Disc Add'l
											OSS Rates($)					
							First	Add'l	First	Add'l	SOMEC	SOMAN	SOMAN	SOMAN	SOMAN	SOMAN
LOOP MAKE-UP																
	Loop Makeup - Preordering Without Reservation, per working or spare facility queried (Manual).			UMK	UMKLW		52.17	52.17								
	Loop Makeup - Preordering With Reservation, per spare facility queried (Manual).			UMK	UMKLP		55.07	55.07								
	Loop Makeup--With or Without Reservation, per working or spare facility queried (Mechanized)			UMK	UMKMQ		0.6784	0.6784								
LINE SPLITTING																
	END USER ORDERING-CENTRAL OFFICE BASED															
	Line Splitting - per line activation DLEC owned splitter			UEPSR UEPSB	UREOS	0.61										
	Line Splitting - per line activation AT&T owned - physical			UEPSR UEPSB	UREBP	0.61	29.68	21.28	19.57	9.61						
	Line Splitting - per line activation AT&T owned - virtual			UEPSR UEPSB	UREBV	1.134	29.68	21.28	19.57	9.61						
	END USER ORDERING - REMOTE SITE LINE SPLITTING															
	UNBUNDLED EXCHANGE ACCESS LOOP															
	2-WIRE ANALOG VOICE GRADE LOOP															
	2 Wire Analog Voice Grade Loop-Service Level 1-Line Splitting-Zone 1		1	UEPSR UEPSB	UEALS	10.69	49.57	22.83	25.62	6.57						
	2 Wire Analog Voice Grade Loop-Service Level 1-Line Splitting-Zone 1		1	UEPSR UEPSB	UEABS	10.69	49.57	22.83	25.62	6.57						
	2 Wire Analog Voice Grade Loop- Service Level 1-Line Splitting-Zone 2		2	UEPSR UEPSB	UEALS	15.20	49.57	22.83	25.62	6.57						
	2 Wire Analog Voice Grade Loop- Service Level 1-Line Splitting-Zone 2		2	UEPSR UEPSB	UEABS	15.20	49.57	22.83	25.62	6.57						
	2 Wire Analog Voice Grade Loop-Service Level 1-Line Splitting-Zone 3		3	UEPSR UEPSB	UEALS	26.97	49.57	22.83	25.62	6.57						
	2 Wire Analog Voice Grade Loop-Service Level 1-Line Splitting-Zone 3		3	UEPSR UEPSB	UEABS	26.97	49.57	22.83	25.62	6.57						
	PHYSICAL COLLOCATION															
	Physical Collocation-2 Wire Cross Connects (Loop) for Line Splitting			UEPSR UEPSB	PE1LS	0.0276	8.22	7.22	5.74	4.58						
	VIRTUAL COLLOCATION															
	Virtual Collocation-2 Wire Cross Connects (Loop) for Line Splitting			UEPSR UEPSB	VE1LS	0.0502	11.57	11.57	0.00	0.00						
UNBUNDLED DEDICATED TRANSPORT																
	INTEROFFICE CHANNEL - DEDICATED TRANSPORT															
	Interoffice Channel - 2-Wire Voice Grade - per mile			U1TVX	1L5XX	0.0091										
	Interoffice Channel - 2-Wire Voice Grade - Facility Termination			U1TVX	U1TV2	25.32	47.35	31.78	18.31	7.03						
	Interoffice Channel - 2-Wire Voice Grade Rev Bat. - per mile			U1TVX	1L5XX	0.0091										
	Interoffice Channel - 4-Wire Voice Grade - per mile			U1TVX	1L5XX	0.0091										
	Interoffice Channel - 4- Wire Voice Grade - Facility Termination			U1TVX	U1TV4	22.58	47.35	31.78	18.31	7.03						
	Interoffice Channel - 56 kbps - per mile			U1TDX	1L5XX	0.0091										
	Interoffice Channel - 56 kbps - Facility Termination			U1TDX	U1TD5	18.44	47.35	31.78	18.31	7.03						
	Interoffice Channel - 64 kbps - per mile			U1TDX	1L5XX	0.0091										
	Interoffice Channel - 64 kbps - Facility Termination			U1TDX	U1TD6	18.44	47.35	31.78	18.31	7.03						
	Interoffice Channel - DS1 - per mile			U1TD1	1L5XX	0.1856										
	Interoffice Channel - DS1 - Facility Termination			U1TD1	U1TF1	88.44	105.54	98.47	21.47	19.05						
	Interoffice Channel - DS3 - per mile			U1TD3	1L5XX	3.87										
	Interoffice Channel - DS3 - Facility Termination			U1TD3	U1TF3	1,071.00	335.46	219.28	72.03	70.56						
	Interoffice Channel - STS-1 - per mile			U1TS1	1L5XX	3.87										
	Interoffice Channel - STS-1 - Facility Termination			U1TS1	U1TFS	1,056.00	335.46	219.28	72.03	70.56						
	UNBUNDLED DARK FIBER - Stand Alone or in Combination															
	Dark Fiber - Interoffice Transport, Per Four Fiber Strands, Per Route Mile Or Fraction Thereof			UDF, UDFCX	1L5DF	26.85										
	Dark Fiber - Interoffice Transport, Per Four Fiber Strands, Per Route Mile Or Fraction Thereof			UDF, UDFCX	UDF14		751.34	193.88								
HIGH CAPACITY UNBUNDLED LOCAL LOOP																
	DS-3/STS-1 UNBUNDLED LOCAL LOOP - Stand Alone															
	DS3 Unbundled Local Loop - per mile			UE3	1L5ND	10.92										
	DS3 Unbundled Local Loop - Facility Termination			UE3	UE3PX	386.88	556.37	343.01	139.13	96.84						
	STS-1Unbundled Local Loop - per mile			UDLSX	1L5ND	10.92										
	STS-1 Unbundled Local Loop - Facility Termination			UDLSX	UDLS1	426.60	556.37	343.01	139.13	96.84						
ENHANCED EXTENDED LINK (EELs)																
	Network Elements Used in Combinations															

UNBUNDLED NETWORK ELEMENTS - Florida

Att: 2 Exh: A

CATEGORY	RATE ELEMENTS	Interim	Zone	BCS	USOC	RATES($)					Svc Order Submitted Elec per LSR	Svc Order Submitted Manually per LSR	Incremental Charge - Manual Svc Order vs. Electronic-1st	Incremental Charge - Manual Svc Order vs. Electronic-Add'l	Incremental Charge - Manual Svc Order vs. Electronic-Disc 1st	Incremental Charge - Manual Svc Order vs. Electronic-Disc Add'l
						Rec	Nonrecurring		Nonrecurring Disconnect		OSS Rates($)					
							First	Add'l	First	Add'l	SOMEC	SOMAN	SOMAN	SOMAN	SOMAN	SOMAN
	2-Wire VG Loop (SL2) in Combination - Zone 1		1	UNCVX	UEAL2	12.24	127.59	60.54	48.00	6.31						
	2-Wire VG Loop (SL2) in Combination - Zone 2		2	UNCVX	UEAL2	17.40	127.59	60.54	48.00	6.31						
	2-Wire VG Loop (SL2) in Combination - Zone 3		3	UNCVX	UEAL2	30.87	127.59	60.54	48.00	6.31						
	4-Wire Analog Voice Grade Loop in Combination - Zone 1		1	UNCVX	UEAL4	18.89	127.59	60.54	48.00	6.31						
	4-Wire Analog Voice Grade Loop in Combination - Zone 2		2	UNCVX	UEAL4	26.84	127.59	60.54	48.00	6.31						
	4-Wire Analog Voice Grade Loop in Combination - Zone 3		3	UNCVX	UEAL4	47.62	127.59	60.54	48.00	6.31						
	2-Wire ISDN Loop in Combination - Zone 1		1	UNCNX	U1L2X	19.28	127.59	60.54	48.00	6.31						
	2-Wire ISDN Loop in Combination - Zone 2		2	UNCNX	U1L2X	27.40	127.59	60.54	48.00	6.31						
	2-Wire ISDN Loop in Combination - Zone 3		3	UNCNX	U1L2X	48.62	127.59	60.54	48.00	6.31						
	4-Wire 56Kbps Digital Grade Loop in Combination - Zone 1		1	UNCDX	UDL56	22.20	127.59	60.54	48.00	6.31						
	4-Wire 56Kbps Digital Grade Loop in Combination - Zone 2		2	UNCDX	UDL56	31.56	127.59	60.54	48.00	6.31						
	4-Wire 56Kbps Digital Grade Loop in Combination - Zone 3		3	UNCDX	UDL56	55.99	127.59	60.54	48.00	6.31						
	4-Wire 64Kbps Digital Grade Loop in Combination - Zone 1		1	UNCDX	UDL64	22.20	127.59	60.54	48.00	6.31						
	4-Wire 64Kbps Digital Grade Loop in Combination - Zone 2		2	UNCDX	UDL64	31.56	127.59	60.54	48.00	6.31						
	4-Wire 64Kbps Digital Grade Loop in Combination - Zone 3		3	UNCDX	UDL64	55.99	127.59	60.54	48.00	6.31						
	4-Wire DS1 Digital Loop in Combination - Zone 1		1	UNC1X	USLXX	70.74	217.75	121.62	51.44	14.45						
	4-Wire DS1 Digital Loop in Combination - Zone 2		2	UNC1X	USLXX	100.54	217.75	121.62	51.44	14.45						
	4-Wire DS1 Digital Loop in Combination - Zone 3		3	UNC1X	USLXX	178.39	217.75	121.62	51.44	14.45						
	DS3 Local Loop in combination - per mile			UNC3X	1L5ND	10.92										
	DS3 Local Loop in combination - Facility Termination			UNC3X	UE3PX	386.88	244.42	154.73	67.10	26.27						
	STS-1 Local Loop in combination - per mile			UNCSX	1L5ND	10.92										
	STS-1 Local Loop in combination - Facility Termination			UNCSX	UDLS1	426.60	244.42	154.73	67.10	26.27						
	Interoffice Channel in combination - 2-wire VG - per mile			UNCVX	1L5XX	0.0091										
	Interoffice Channel in combination - 2-wire VG - Facility Termination			UNCVX	U1TV2	25.32	94.70	52.59	45.28	18.03						
	Interoffice Channel in combination - 4-wire VG - per mile			UNCVX	1L5XX	0.0091										
	Interoffice Channel in combination - 4-wire VG - Facility Termination			UNCVX	U1TV4	22.58	94.70	52.59	45.28	18.03						
	Interoffice Channel in combination - 4-wire 56 kbps - per mile			UNCDX	1L5XX	0.0091										
	Interoffice Channel in combination - 4-wire 56 kbps - Facility Termination			UNCDX	U1TD5	18.44	94.70	52.59	45.28	18.03						
	Interoffice Channel in combination - 4-wire 64 kbps - per mile			UNCDX	1L5XX	0.0091										
	Interoffice Channel in combination - 4-wire 64 kbps - Facility Termination			UNCDX	U1TD6	18.44	94.70	52.59	45.28	18.03						
	Interoffice Channel in combination - DS1 - per mile			UNC1X	1L5XX	0.1856										
	Interoffice Channel in combination - DS1 Facility Termination			UNC1X	U1TF1	88.44	174.46	122.46	45.61	17.95						
	Interoffice Channel in combination - DS3 - per mile			UNC3X	1L5XX	3.87										
	Interoffice Channel in combination - DS3 - Facility Termination			UNC3X	U1TF3	1,071.00	320.00	138.20	38.60	18.81						
	Interoffice Channel in combination - STS-1 - per mile			UNCSX	1L5XX	3.87										
	Interoffice Channel in combination - STS-1 Facility Termination			UNCSX	U1TFS	1,056.00	320.00	138.20	38.60	18.81						
ADDITIONAL NETWORK ELEMENTS																
	Optional Features & Functions:															
	Clear Channel Capability Extended Frame Option - per DS1	I		U1TD1, ULDD1,UNC1X	CCOEF		0.00									
	Clear Channel Capability Super FrameOption - per DS1	I		U1TD1, ULDD1,UNC1X	CCOSF		0.00									
	Clear Channel Capability (SF/ESF) Option - Subsequent Activity - per DS1	I		ULDD1, U1TD1, UNC1X, USL	NRCCC		184.92	23.82	2.07	0.80						
	C-bit Parity Option - Subsequent Activity - per DS3	i		U1TD3, ULDD3, UE3, UNC3X	NRCC3		219.09	7.67	0.773	0.00						
	DS1/DS0 Channel System			UNC1X	MQ1	146.77	57.28	14.74	1.50	1.34						
	DS3/DS1Channel System			UNC3X, UNCSX	MQ3	211.19	115.60	56.54	12.16	4.26						
	Voice Grade COCI in combination			UNCVX	1D1VG	1.38	6.71	4.84								
	Voice Grade COCI - for 2W-SL2 & 4W Voice Grade Local Loop			UEA	1D1VG	1.38	6.71	4.84	0.00	0.00						
	Voice Grade COCI - for connection to a channelized DS1 Local Channel in the same SWC as collocation			U1TUC	1D1VG	1.38	6.71	4.84	0.00	0.00						
	OCU-DP COCI (2.4-64kbs) in combination			UNCDX	1D1DD	2.10	6.71	4.84	0.00	0.00						
	OCU-DP COCI (2.4-64kbs) - for Unbundled Digital Loop			UDL	1D1DD	2.10	6.71	4.84	0.00	0.00						
	OCU-DP COCI (2.4-64kbs) - for connection to a channelized DS1 Local Channel in the same SWC as collocation			U1TUD	1D1DD	2.10	6.71	4.84	0.00	0.00						
	2-wire ISDN COCI (BRITE) in combination			UNCNX	UC1CA	3.66	6.71	4.84	0.00	0.00						
	2-wire ISDN COCI (BRITE) - for a Local Loop			UDN	UC1CA	3.66	6.71	4.84	0.00	0.00						

UNBUNDLED NETWORK ELEMENTS - Florida																	Att: 2 Exh: A
CATEGORY		RATE ELEMENTS	Interim	Zone	BCS	USOC	RATES($)					Svc Order Submitted Elec per LSR	Svc Order Submitted Manually per LSR	Incremental Charge - Manual Svc Order vs. Electronic-1st	Incremental Charge - Manual Svc Order vs. Electronic-Add'l	Incremental Charge - Manual Svc Order vs. Electronic-Disc 1st	Incremental Charge - Manual Svc Order vs. Electronic-Disc Add'l
							Rec	Nonrecurring		Nonrecurring Disconnect		OSS Rates($)					
								First	Add'l	First	Add'l	SOMEC	SOMAN	SOMAN	SOMAN	SOMAN	SOMAN
		2-wire ISDN COCI (BRITE) - for connection to a channelized DS1 Local Channel in the same SWC as collocation			U1TUB	UC1CA	3.66	6.71	4.84	0.00	0.00						
		DS1 COCI in combination			UNC1X	UC1D1	13.76	6.71	4.84	0.00	0.00						
		DS1 COCI - for Stand Alone Local Channel			ULDD1	UC1D1	13.76	6.71	4.84	0.00	0.00						
		DS1 COCI - for Stand Alone Interoffice Channel			U1TD1	UC1D1	13.76	6.71	4.84	0.00	0.00						
		DS1 COCI - for DS1 Local Loop			USL, NTCD1	UC1D1	13.76	6.71	4.84	0.00	0.00						
		DS1 COCI - for connection to a channelized DS1 Local Channel in the same SWC as collocation			U1TUA	UC1D1	13.76	6.71	4.84	0.00	0.00						
		Wholesale - UNE, Switch-As-Is Conversion Charge			UNCVX, UNCDX, UNC1X, UNC3X, UNCSX, UDFCX, XDH1X, HFQC6, XDD2X, XDV6X, XDDFX, XDD4X, HFRST, UNCNX	UNCCC		8.98	8.98								
		Unbundled Misc Rate Element, SNE SAI, Single Network Element - Switch As Is Non-recurring Charge, per circuit (LSR)			U1TVX, U1TDX, U1TD1, U1TD3, U1TS1, UDF, UE3	URESL		8.98	8.98								
		Unbundled Misc Rate Element, SNE SAI, Single Network Element - Switch As Is Non-recurring Charge, incremental charge per circuit on a spreadsheet			U1TVX, U1TDX, U1TD1, U1TD3, U1TS1, UDF, UE3	URESP		8.98	8.98								
	Access to DCS - Customer Reconfiguration (FlexServ)																
		Customer Reconfiguration Establishment						1.63		1.63							
		DS1 DCS Termination with DS0 Switching					27.39	32.89	23.58	16.96	12.77						
		DS1 DCS Termination with DS1 Switching					11.70	25.07	15.76	13.05	8.86						
		DS3 DCS Termination with DS1 Switching					146.81	32.89	23.58	16.96	12.77						
	Node (SynchroNet)																
		Node per month			UNCDX	UNCNT	16.35										
	Service Rearrangements																
		NRC - Change in Facility Assignment per circuit Service Rearrangement	I		U1TVX, U1TDX, U1TUC, U1TUD, U1TUB, ULDVX, ULDDX, UNCVX, UNCDX, UNC1X	URETD		101.07	43.04								
		NRC - Change in Facility Assignment per circuit Project Management (added to CFA per circuit if project managed)	I		U1TVX, U1TDX, U1TUC, U1TUD, U1TUB, ULDVX, ULDDX, UNCVX, UNCDX, UNC1X	URETB		3.67	3.67								
		NRC - Order Coordination Specific Time - Dedicated Transport	I		UNC1X, UNC3X	OCOSR		18.90	18.90								
COMMINGLING																	
		Commingling Authorization			UNCVX, UNCDX, UNC1X, UNC3X, UNCSX, U1TD1, U1TD3, U1TS1, UE3, UDLSX, U1TVX, U1TDX, U1TUB, ULDVX, ULDD1, ULDD3, ULDS1	CMGAU	0.00	0.00	0.00	0.00	0.00						
	Commingled (UNE part of single bandwidth circuit)																
		Commingled VG COCI			XDV2X	1D1VG	1.38	6.71	4.84	0.00	0.00						
		Commingled Digital COCI			XDV6X	1D1DD	2.10	6.71	4.84	0.00	0.00						
		Commingled ISDN COCI			XDD4X	UC1CA	3.66	6.71	4.84	0.00	0.00						
		Commingled 2-wire VG Interoffice Channel			XDV2X	U1TV2	25.32	94.70	52.59	45.28	18.03						
		Commingled 4-wire VG Interoffice Channel			XDV6X	U1TV4	22.58	94.70	52.59	45.28	18.03						
		Commingled 56kbps Interoffice Channel			XDD4X	U1TD5	18.44	94.70	52.59	45.28	18.03						
		Commingled 64kbps Interoffice Channel			XDD4X	U1TD6	18.44	94.70	52.59	45.28	18.03						
		Commingled VG/DS0 Interoffice Channel Mileage			XDV2X, XDV6X, XDD4X	1L5XX	0.0091										
		Commingled 2-wire Local Loop Zone 1		1	XDV2X	UEAL2	12.24	127.59	60.54	48.00	6.31						
		Commingled 2-wire Local Loop Zone 2		2	XDV2X	UEAL2	17.40	127.59	60.54	48.00	6.31						
		Commingled 2-wire Local Loop Zone 3		3	XDV2X	UEAL2	30.87	127.59	60.54	48.00	6.31						
		Commingled 4-wire Local Loop Zone 1		1	XDV6X	UEAL4	18.89	127.59	60.54	48.00	6.31						

UNBUNDLED NETWORK ELEMENTS - Florida																	Att: 2 Exh: A
CATEGORY		RATE ELEMENTS	Interim	Zone	BCS	USOC	RATES($)					Svc Order Submitted Elec per LSR	Svc Order Submitted Manually per LSR	Incremental Charge - Manual Svc Order vs. Electronic-1st	Incremental Charge - Manual Svc Order vs. Electronic-Add'l	Incremental Charge - Manual Svc Order vs. Electronic-Disc 1st	Incremental Charge - Manual Svc Order vs. Electronic-Disc Add'l
							Rec	Nonrecurring		Nonrecurring Disconnect		OSS Rates($)					
								First	Add'l	First	Add'l	SOMEC	SOMAN	SOMAN	SOMAN	SOMAN	SOMAN
		Commingled 4-wire Local Loop Zone 2		2	XDV6X	UEAL4	26.84	127.59	60.54	48.00	6.31						
		Commingled 4-wire Local Loop Zone 3		3	XDV6X	UEAL4	47.62	127.59	60.54	48.00	6.31						
		Commingled 56kbps Local Loop Zone 1		1	XDD4X	UDL56	22.20	127.59	60.54	48.00	6.31						
		Commingled 56kbps Local Loop Zone 2		2	XDD4X	UDL56	31.56	127.59	60.54	48.00	6.31						
		Commingled 56kbps Local Loop Zone 3		3	XDD4X	UDL56	55.99	127.59	60.54	48.00	6.31						
		Commingled 64kbps Local Loop Zone 1		1	XDD4X	UDL64	22.20	127.59	60.54	48.00	6.31						
		Commingled 64kbps Local Loop Zone 2		2	XDD4X	UDL64	31.56	127.59	60.54	48.00	6.31						
		Commingled 64kbps Local Loop Zone 3		3	XDD4X	UDL64	55.99	127.59	60.54	48.00	6.31						
		Commingled ISDN Local Loop Zone 1		1	XDD4X	U1L2X	19.28	127.59	60.54	48.00	6.31						
		Commingled ISDN Local Loop Zone 2		2	XDD4X	U1L2X	27.40	127.59	60.54	48.00	6.31						
		Commingled ISDN Local Loop Zone 3		3	XDD4X	U1L2X	48.62	127.59	60.54	48.00	6.31						
		Commingled DS1 COCI			XDH1X	UC1D1	13.76	6.71	4.84	0.00	0.00						
		Commingled DS1 Interoffice Channel			XDH1X	U1TF1	88.44	174.46	122.46	45.61	17.95						
		Commingled DS1 Interoffice Channel Mileage			XDH1X	1L5XX	0.1856										
		Commingled DS1/DS0 Channel System			XDH1X	MQ1	146.77	57.28	14.74	1.50	1.34						
		Commingled DS1 Local Loop Zone 1		1	XDH1X	USLXX	70.74	217.75	121.62	51.44	14.45						
		Commingled DS1 Local Loop Zone 2		2	XDH1X	USLXX	100.54	217.75	121.62	51.44	14.45						
		Commingled DS1 Local Loop Zone 3		3	XDH1X	USLXX	178.39	217.75	121.62	51.44	14.45						
		Commingled DS3 Local Loop			HFQC6	UE3PX	386.88	244.42	154.73	67.10	26.27						
		Commingled DS3/STS-1 Local Loop Mileage			HFQC6, HFRST	1L5ND	10.92										
		Commingled STS-1 Local Loop			HFRST	UDLS1	426.60	244.42	154.73	67.10	26.27						
		Commingled DS3/DS1 Channel System			HFQC6	MQ3	211.19	115.60	56.54	12.16	4.26						
		Commingled DS3 Interoffice Channel			HFQC6	U1TF3	1,071.00	320.00	138.20	38.60	18.81						
		Commingled DS3 Interoffice Channel Mileage			HFQC6	1L5XX	3.87										
		Commingled STS-1Interoffice Channel			HFRST	U1TFS	1,056.00	320.00	138.20	38.60	18.81						
		Commingled STS-1Interoffice Channel Mileage			HFRST	1L5XX	3.87										
		Commingled Dark Fiber - Interoffice Transport, Per Four Fiber Strands, Per Route Mile Or Fraction Thereof			HEQDL	1L5DF	26.85										
		Commingled Dark Fiber - Interoffice Transport, Per Four Fiber Strands, Per Route Mile Or Fraction Thereof			HEQDL	UDF14		751.34	193.88								
		UNE to Commingled Conversion Tracking			XDH1X, HFQC6	CMGUN	0.00	0.00	0.00	0.00	0.00						
		SPA to Commingled Conversion Tracking			XDH1X, HFQC6	CMGSP	0.00	0.00	0.00	0.00	0.00						
LNP Query Service																	
		LNP Charge Per query					0.000852										
		LNP Service Establishment Manual						13.83	13.83	12.71	12.71						
		LNP Service Provisioning with Point Code Establishment						655.50	334.88	297.03	218.40						
911 PBX LOCATE																	
	911 PBX LOCATE DATABASE CAPABILITY																
		Service Establishment per CLEC per End User Account			9PBDC	9PBEU		1,820.00									
		Changes to TN Range or Customer Profile			9PBDC	9PBTN		182.14									
		Per Telephone Number (Monthly)			9PBDC	9PBMM	0.07										
		Change Company (Service Provider) ID			9PBDC	9PBPC		534.66									
		PBX Locate Service Support per CLEC (Monthlt)			9PBDC	9PBMR	178.80										
		Service Order Charge			9PBDC	9PBSC		11.90									
	911 PBX LOCATE TRANSPORT COMPONENT																
	See Att 3																
	Note: Rates displaying an "I" in Interim column are interim as a result of a Commission order.																

UNBUNDLED NETWORK ELEMENTS - Georgia																	Att: 2 Exh: A
CATEGORY		RATE ELEMENTS	Interim	Zone	BCS	USOC	RATES($)					Svc Order Submitted Elec per LSR	Svc Order Submitted Manually per LSR	Incremental Charge - Manual Svc Order vs. Electronic-1st	Incremental Charge - Manual Svc Order vs. Electronic-Add'l	Incremental Charge - Manual Svc Order vs. Electronic-Disc 1st	Incremental Charge - Manual Svc Order vs. Electronic-Disc Add'l
							Rec	Nonrecurring		Nonrecurring Disconnect		OSS Rates($)					
								First	Add'l	First	Add'l	SOMEC	SOMAN	SOMAN	SOMAN	SOMAN	SOMAN
	The "Zone" shown in the sections for stand-alone loops or loops as part of a combination refers to Geographically Deaveraged UNE Zones. To view Geographically Deaveraged UNE Zone Designations by Central Office, refer to internet Website: http://www.interconnection.bellsouth.com/become_a_clec/html/interconnection.htm																
OPERATIONS SUPPORT SYSTEMS (OSS) - "REGIONAL RATES"																	
	NOTE: (1) CLEC should contact its contract negotiator if it prefers the "state specific" OSS charges as ordered by the State Commissions. The OSS charges currently contained in this rate exhibit are the AT&T "regional" service ordering charges. CLEC may elect either the state specific Commission ordered rates for the service ordering charges, or CLEC may elect the regional service ordering charge, however, CLEC can not obtain a mixture of the two regardless if CLEC has a interconnection contract established in each of the 9 states.																
	NOTE: (2) Any element that can be ordered electronically will be billed according to the SOMEC rate listed in this category. Please refer to AT&T's Local Ordering Handbook (LOH) to determine if a product can be ordered electronically. For those elements that cannot be ordered electronically at present per the LOH, the listed SOMEC rate in this category reflects the charge that would be billed to a CLEC once electronic ordering capabilities come on-line for that element. Otherwise, the manual ordering charge, SOMAN, will be applied to a CLECs bill when it submits an LSR to AT&T.																
		OSS - Electronic Service Order Charge, Per Local Service Request (LSR) - UNE Only				SOMEC		3.50	0.00	3.50	0.00						
		OSS - Manual Service Order Charge, Per Local Service Request (LSR) - UNE Only				SOMAN		11.71	0.00	6.13	0.00						
		OSS - Electronic Service Order Charge, Per Local Service Request (LSR) - UNE Only Per First 1000 Orders Per Month			SSOSS	SOMGA	0.00										
UNE SERVICE DATE ADVANCEMENT CHARGE																	
	NOTE: The Expedite charge will be maintained commensurate with BellSouth's FCC No.1 Tariff, Section 5 as applicable.																
		UNE Expedite Charge per Circuit or Line Assignable USOC, per Day			UAL, UEANL, UCL, UEF, UDC, UDF, UEQ, UDL, UENTW, UDN, UEA, UHL, ULC, USL, U1T12, U1T48, U1TD1, U1TD3, U1TDX, U1TO3, U1TS1, U1TVX, UC1BC, UC1BL, UC1CC, UC1CL, UC1DC, UC1DL, UC1EC, UC1EL, UC1FC, UC1FL, UC1GC, UC1GL, UC1HC, UC1HL, UDL12, UDL48, UDLO3, UDLSX, UE3, ULD12, ULD48, ULDD1, ULDD3, ULDDX, ULDO3, ULDS1, ULDVX, UNC1X, UNC3X, UNCDX, UNCNX, UNCSX, UNCVX, UNLD1, UNLD3, UXTD1, UXTD3, UXTS1, U1TUC, U1TUD, U1TUB, U1TUA,NTCVG, NTCUD, NTCD1	SDASP		200.00									
ORDER MODIFICATION CHARGE																	
		Order Modification Charge (OMC)						26.21	0.00	0.00	0.00						
		Order Modification Additional Dispatch Charge (OMCAD)						150.00	0.00	0.00	0.00						
UNBUNDLED EXCHANGE ACCESS LOOP																	
	2-WIRE ANALOG VOICE GRADE LOOP																
		2-Wire Analog Voice Grade Loop - Service Level 1- Zone 1		1	UEANL	UEAL2	12.08	39.98	9.98	5.61	1.72						
		2-Wire Analog Voice Grade Loop - Service Level 1- Zone 2		2	UEANL	UEAL2	17.43	39.98	9.98	5.61	1.72						
		2-Wire Analog Voice Grade Loop - Service Level 1- Zone 3		3	UEANL	UEAL2	35.09	39.98	9.98	5.61	1.72						
		2-Wire Analog Voice Grade Loop - Service Level 1- Zone 1		1	UEANL	UEASL	12.08	39.98	9.98	5.61	1.72						
		2-Wire Analog Voice Grade Loop - Service Level 1- Zone 2		2	UEANL	UEASL	17.43	39.98	9.98	5.61	1.72						
		2-Wire Analog Voice Grade Loop - Service Level 1- Zone 3		3	UEANL	UEASL	35.09	39.98	9.98	5.61	1.72						
		Tag Loop at End User Premise			UEANL	URETL		8.92	0.88								
		Loop Testing - Basic 1st Half Hour			UEANL	URET1		26.64	0.00								
		Loop Testing - Basic Additional Half Hour			UEANL	URETA		15.15	15.15								

UNBUNDLED NETWORK ELEMENTS - Georgia																	Att: 2 Exh: A
CATEGORY		RATE ELEMENTS	Interim	Zone	BCS	USOC	RATES($)					Svc Order Submitted Elec per LSR	Svc Order Submitted Manually per LSR	Incremental Charge - Manual Svc Order vs. Electronic-1st	Incremental Charge - Manual Svc Order vs. Electronic-Add'l	Incremental Charge - Manual Svc Order vs. Electronic-Disc 1st	Incremental Charge - Manual Svc Order vs. Electronic-Disc Add'l
							Rec	Nonrecurring		Nonrecurring Disconnect		OSS Rates($)					
								First	Add'l	First	Add'l	SOMEC	SOMAN	SOMAN	SOMAN	SOMAN	SOMAN
		Manual Order Coordiantion for UVL-SL1s (per loop)			UEANL	UEAMC		18.90	18.90	5.61	1.72						
		Order Coordination for Specified Conversion Time for UVL-SL1 (per LSR)			UEANL	OCOSL		57.73									
		Unbundled Non-Design Voice Loop, billing for AT&T providing make-up (Engineering Information - E.I.)			UEANL	UEANM		7.29	7.29								
		Unbundled Loop Service Rearrangement, change in loop facility, per circuit			UEANL	UREWO		15.75	8.92	5.61	1.72						
		Bulk Migration, per 2 Wire Voice Loop-SL1			UEANL	UREPN		39.98	9.98	5.61	1.72						
		Bulk Migration Order Coordination, per 2 Wire Voice Loop-SL1			UEANL	UREPM		18.90	18.90								
	2-WIRE UNBUNDLED COPPER LOOP - NON-DESIGNED																
		2 Wire Unbundled Copper Loop Non-Designed- Zone 1		1	UEQ	UEQ2X	11.02	44.69	22.40								
		2 Wire Unbundled Copper Loop Non-Designed- Zone 2		2	UEQ	UEQ2X	12.72	44.69	22.40								
		2 Wire Unbundled Copper Loop Non-Designed-Zone 3		3	UEQ	UEQ2X	20.22	44.69	22.40								
		Tag Loop at End User Premise			UEQ	URETL		8.92	0.88								
		Loop Testing - Basic 1st Half Hour			UEQ	URET1		26.64	0.00								
		Loop Testing - Basic Additional Half Hour			UEQ	URETA		15.15	15.15								
		Manual Order Coordination 2 Wire Unbundled Copper Loop - Non-Designed (per loop)			UEQ	USBMC		18.90	18.90								
		Unbundled Copper Loop - Non-Design, billing for AT&T providing make-up (Engineering Information - E.I.)			UEQ	UEQMU		7.29	7.29								
		Unbundled Loop Service Rearrangement, change in loop facility, per circuit			UEQ	UREWO		14.25	7.42								
		Bulk Migration, per 2 Wire UCL-ND			UEQ	UREPN		44.69	22.40								
		Bulk Migration Order Coordination, per 2 Wire UCL-ND			UEQ	UREPM		18.90	18.90								
UNBUNDLED EXCHANGE ACCESS LOOP																	
	2-WIRE ANALOG VOICE GRADE LOOP																
		2-Wire Analog Voice Grade Loop - Service Level 2 w/Loop or Ground Start Signaling - Zone 1		1	UEA	UEAL2	13.32	79.78	24.62	18.90	7.86						
		2-Wire Analog Voice Grade Loop - Service Level 2 w/Loop or Ground Start Signaling - Zone 2		2	UEA	UEAL2	18.66	79.78	24.62	18.90	7.86						
		2-Wire Analog Voice Grade Loop - Service Level 2 w/Loop or Ground Start Signaling - Zone 3		3	UEA	UEAL2	36.33	79.78	24.62	18.90	7.86						
		2-Wire Analog Voice Grade Loop - Service Level 2 w/Reverse Battery Signaling - Zone 1		1	UEA	UEAR2	13.32	79.78	24.62	18.90	7.86						
		2-Wire Analog Voice Grade Loop - Service Level 2 w/Reverse Battery Signaling - Zone 2		2	UEA	UEAR2	18.66	79.78	24.62	18.90	7.86						
		2-Wire Analog Voice Grade Loop - Service Level 2 w/Reverse Battery Signaling - Zone 3		3	UEA	UEAR2	36.33	79.78	24.62	18.90	7.86						
		Switch-As-Is Conversion rate per UNE Loop, Single LSR, (per DS0)			UEA	URESL		6.54	6.54								
		Switch-As-Is Conversion rate per UNE Loop, Spreadsheet, (per DS0)			UEA	URESP		6.54	6.54								
		Unbundled Loop Service Rearrangement, change in loop facility, per circuit			UEA	UREWO		87.72	36.36								
		Loop Tagging - Service Level 2 (SL2)			UEA	URETL		11.19	1.10								
		Bulk Migration, per 2 Wire Voice Loop-SL2			UEA	UREPN		79.78	24.62								
		Bulk Migration Order Coordination, per 2 Wire Voice Loop-SL2			UEA	UREPM		0.00	0.00								
	4-WIRE ANALOG VOICE GRADE LOOP																
		4-Wire Analog Voice Grade Loop - Zone 1		1	UEA	UEAL4	21.04	92.92	28.14	19.50	8.12						
		4-Wire Analog Voice Grade Loop - Zone 2		2	UEA	UEAL4	24.49	92.92	28.14	19.50	8.12						
		4-Wire Analog Voice Grade Loop - Zone 3		3	UEA	UEAL4	33.40	92.92	28.14	19.50	8.12						
		Switch-As-Is Conversion rate per UNE Loop, Single LSR, (per DS0)			UEA	URESL		6.54	6.54								
		Switch-As-Is Conversion rate per UNE Loop, Spreadsheet, (per DS0)			UEA	URESP		6.54	6.54								
		Unbundled Loop Service Rearrangement, change in loop facility, per circuit			UEA	UREWO		87.72	36.36								
	2-WIRE ISDN DIGITAL GRADE LOOP																
		2-Wire ISDN Digital Grade Loop - Zone 1		1	UDN	U1L2X	21.89	180.06	35.25	18.23	6.97						
		2-Wire ISDN Digital Grade Loop - Zone 2		2	UDN	U1L2X	25.27	180.06	35.25	18.23	6.97						
		2-Wire ISDN Digital Grade Loop - Zone 3		3	UDN	U1L2X	40.17	180.06	35.25	18.23	6.97						
		Unbundled Loop Service Rearrangement, change in loop facility, per circuit			UDN	UREWO		120.98	33.04								
	2-WIRE ASYMMETRICAL DIGITAL SUBSCRIBER LINE (ADSL) COMPATIBLE LOOP																

UNBUNDLED NETWORK ELEMENTS - Georgia																	Att: 2 Exh: A
CATEGORY		RATE ELEMENTS	Interim	Zone	BCS	USOC	RATES($)					Svc Order Submitted Elec per LSR	Svc Order Submitted Manually per LSR	Incremental Charge - Manual Svc Order vs. Electronic-1st	Incremental Charge - Manual Svc Order vs. Electronic-Add'l	Incremental Charge - Manual Svc Order vs. Electronic-Disc 1st	Incremental Charge - Manual Svc Order vs. Electronic-Disc Add'l
							Rec	Nonrecurring		Nonrecurring Disconnect		OSS Rates($)					
								First	Add'l	First	Add'l	SOMEC	SOMAN	SOMAN	SOMAN	SOMAN	SOMAN
		2 Wire Unbundled ADSL Loop including manual service inquiry & facility reservation - Zone 1		1	UAL	UAL2X	11.23	44.69	31.55	0.00	0.00						
		2 Wire Unbundled ADSL Loop including manual service inquiry & facility reservation - Zone 2		2	UAL	UAL2X	12.97	44.69	31.55	0.00	0.00						
		2 Wire Unbundled ADSL Loop including manual service inquiry & facility reservation - Zone 3		3	UAL	UAL2X	20.62	44.69	31.55	0.00	0.00						
		2 Wire Unbundled ADSL Loop without manual service inquiry & facility reservaton - Zone 1		1	UAL	UAL2W	11.23	44.69	31.55	0.00	0.00						
		2 Wire Unbundled ADSL Loop without manual service inquiry & facility reservaton - Zone 2		2	UAL	UAL2W	12.97	44.69	31.55	0.00	0.00						
		2 Wire Unbundled ADSL Loop without manual service inquiry & facility reservaton - Zone 3		3	UAL	UAL2W	20.62	44.69	31.55	0.00	0.00						
		Unbundled Loop Service Rearrangement, change in loop facility, per circuit			UAL	UREWO		44.69	29.29								
	2-WIRE HIGH BIT RATE DIGITAL SUBSCRIBER LINE (HDSL) COMPATIBLE LOOP																
		2 Wire Unbundled HDSL Loop including manual service inquiry & facility reservation - Zone 1		1	UHL	UHL2X	7.88	44.69	31.55	0.00	0.00						
		2 Wire Unbundled HDSL Loop including manual service inquiry & facility reservation - Zone 2		2	UHL	UHL2X	9.09	44.69	31.55	0.00	0.00						
		2 Wire Unbundled HDSL Loop including manual service inquiry & facility reservation - Zone 3		3	UHL	UHL2X	14.48	44.69	31.55	0.00	0.00						
		2 Wire Unbundled HDSL Loop without manual service inquiry and facility reservation - Zone 1		1	UHL	UHL2W	7.88	44.69	31.55	0.00	0.00						
		2 Wire Unbundled HDSL Loop without manual service inquiry and facility reservation - Zone 2		2	UHL	UHL2W	9.09	44.69	31.55	0.00	0.00						
		2 Wire Unbundled HDSL Loop without manual service inquiry and facility reservation - Zone 3		3	UHL	UHL2W	14.48	44.69	31.55	0.00	0.00						
		Unbundled Loop Service Rearrangement, change in loop facility, per circuit			UHL	UREWO		44.69	31.55								
	4-WIRE HIGH BIT RATE DIGITAL SUBSCRIBER LINE (HDSL) COMPATIBLE LOOP																
		4 Wire Unbundled HDSL Loop including manual service inquiry and facility reservation - Zone 1		1	UHL	UHL4X	10.39	44.69	31.55	0.00	0.00						
		4-Wire Unbundled HDSL Loop including manual service inquiry and facility reservation - Zone 2		2	UHL	UHL4X	12.00	44.69	31.55	0.00	0.00						
		4-Wire Unbundled HDSL Loop including manual service inquiry and facility reservation - Zone 3		3	UHL	UHL4X	19.07	44.69	31.55	0.00	0.00						
		4-Wire Unbundled HDSL Loop without manual service inquiry and facility reservation - Zone 1		1	UHL	UHL4W	10.39	44.69	31.55	0.00	0.00						
		4-Wire Unbundled HDSL Loop without manual service inquiry and facility reservation - Zone 2		2	UHL	UHL4W	12.00	44.69	31.55	0.00	0.00						
		4-Wire Unbundled HDSL Loop without manual service inquiry and facility reservation - Zone 3		3	UHL	UHL4W	19.07	44.69	31.55	0.00	0.00						
		Unbundled Loop Service Rearrangement, change in loop facility, per circuit			UHL	UREWO		44.69	31.55								
	4-WIRE DS1 DIGITAL LOOP																
		4-Wire DS1 Digital Loop - Zone 1		1	USL	USLXX	49.41	211.72	72.42	38.20	7.19						
		4-Wire DS1 Digital Loop - Zone 2		2	USL	USLXX	52.55	211.72	72.42	38.20	7.19						
		4-Wire DS1 Digital Loop - Zone 3		3	USL	USLXX	68.40	211.72	72.42	38.20	7.19						
		Switch-As-Is Conversion rate per UNE Loop, Single LSR, (per DS1)			USL	URESL		6.54	6.54								
		Switch-As-Is Conversion rate per UNE Loop, Spreadsheet, (per DS1)			USL	URESP		6.54	6.54								
		Unbundled Loop Service Rearrangement, change in loop facility, per circuit			USL	UREWO		100.91	42.97								
		271 - 4-Wire DS1 Digital Loop - Zone 1		1	USL	271UC	85.97	211.72	72.42	38.20	7.19						
		271 - 4-Wire DS1 Digital Loop - Zone 2		2	USL	271UC	81.27	211.72	72.42	38.20	7.19						
		271 - 4-Wire DS1 Digital Loop - Zone 3		3	USL	271UC	128.28	211.72	72.42	38.20	7.19						
	4-WIRE 19.2, 56 OR 64 KBPS DIGITAL GRADE LOOP																
		4 Wire Unbundled Digital Loop 2.4 Kbps - Zone 1		1	UDL	UDL2X	25.81	196.47	36.96	18.80	7.19						
		4 Wire Unbundled Digital Loop 2.4 Kbps - Zone 2		2	UDL	UDL2X	31.54	196.47	36.96	18.80	7.19						
		4 Wire Unbundled Digital Loop 2.4 Kbps - Zone 3		3	UDL	UDL2X	42.38	196.47	36.96	18.80	7.19						
		4 Wire Unbundled Digital Loop 4.8 Kbps - Zone 1		1	UDL	UDL4X	25.81	196.47	36.96	18.80	7.19						
		4 Wire Unbundled Digital Loop 4.8 Kbps - Zone 2		2	UDL	UDL4X	31.54	196.47	36.96	18.80	7.19						
		4 Wire Unbundled Digital Loop 4.8 Kbps - Zone 3		3	UDL	UDL4X	42.38	196.47	36.96	18.80	7.19						

UNBUNDLED NETWORK ELEMENTS - Georgia																	Att: 2 Exh: A
CATEGORY		RATE ELEMENTS	Interim	Zone	BCS	USOC	RATES($)					Svc Order Submitted Elec per LSR	Svc Order Submitted Manually per LSR	Incremental Charge - Manual Svc Order vs. Electronic-1st	Incremental Charge - Manual Svc Order vs. Electronic-Add'l	Incremental Charge - Manual Svc Order vs. Electronic-Disc 1st	Incremental Charge - Manual Svc Order vs. Electronic-Disc Add'l
							Rec	Nonrecurring		Nonrecurring Disconnect		OSS Rates($)					
								First	Add'l	First	Add'l	SOMEC	SOMAN	SOMAN	SOMAN	SOMAN	SOMAN
		4 Wire Unbundled Digital Loop 9.6 Kbps - Zone 1		1	UDL	UDL9X	25.81	196.47	36.96	18.80	7.19						
		4 Wire Unbundled Digital Loop 9.6 Kbps - Zone 2		2	UDL	UDL9X	31.54	196.47	36.96	18.80	7.19						
		4 Wire Unbundled Digital Loop 9.6 Kbps - Zone 3		3	UDL	UDL9X	42.38	196.47	36.96	18.80	7.19						
		4 Wire Unbundled Digital 19.2 Kbps - Zone 1		1	UDL	UDL19	25.81	196.47	36.96	18.80	7.19						
		4 Wire Unbundled Digital 19.2 Kbps - Zone 2		2	UDL	UDL19	31.54	196.47	36.96	18.80	7.19						
		4 Wire Unbundled Digital 19.2 Kbps - Zone 3		3	UDL	UDL19	42.38	196.47	36.96	18.80	7.19						
		4 Wire Unbundled Digital Loop 56 Kbps - Zone 1		1	UDL	UDL56	25.81	196.47	36.96	18.80	7.19						
		4 Wire Unbundled Digital Loop 56 Kbps - Zone 2		2	UDL	UDL56	31.54	196.47	36.96	18.80	7.19						
		4 Wire Unbundled Digital Loop 56 Kbps - Zone 3		3	UDL	UDL56	42.38	196.47	36.96	18.80	7.19						
		4 Wire Unbundled Digital Loop 64 Kbps - Zone 1		1	UDL	UDL64	25.81	196.47	36.96	18.80	7.19						
		4 Wire Unbundled Digital Loop 64 Kbps - Zone 2		2	UDL	UDL64	31.54	196.47	36.96	18.80	7.19						
		4 Wire Unbundled Digital Loop 64 Kbps - Zone 3		3	UDL	UDL64	42.38	196.47	36.96	18.80	7.19						
		Switch-As-Is Conversion rate per UNE Loop, Single LSR, (per DS0)			UDL	URESL		6.54	6.54								
		Switch-As-Is Conversion rate per UNE Loop, Spreadsheet, (per DS0)			UDL	URESP		6.54	6.54								
		Unbundled Loop Service Rearrangement, change in loop facility, per circuit			UDL	UREWO		101.95	49.66								
	2-WIRE Unbundled COPPER LOOP																
		2-Wire Unbundled Copper Loop-Designed including manual service inquiry & facility reservation - Zone 1		1	UCL	UCLPB	12.02	44.69	31.55	0.00	0.00						
		2-Wire Unbundled Copper Loop-Designed including manual service inquiry & facility reservation - Zone 2		2	UCL	UCLPB	13.88	44.69	31.55	0.00	0.00						
		2 Wire Unbundled Copper Loop-Designed including manual service inquiry & facility reservation - Zone 3		3	UCL	UCLPB	22.07	44.69	31.55	0.00	0.00						
		2-Wire Unbundled Copper Loop-Designed without manual service inquiry and facility reservation - Zone 1		1	UCL	UCLPW	12.02	44.69	31.55	0.00	0.00						
		2-Wire Unbundled Copper Loop-Designed without manual service inquiry and facility reservation - Zone 2		2	UCL	UCLPW	13.88	44.69	31.55	0.00	0.00						
		2-Wire Unbundled Copper Loop-Designed without manual service inquiry and facility reservation - Zone 3		3	UCL	UCLPW	22.07	44.69	31.55	0.00	0.00						
		Order Coordination for Unbundled Copper Loops (per loop)			UCL	UCLMC		18.90	18.90								
		Unbundled Loop Service Rearrangement, change in loop facility, per circuit			UCL	UREWO		44.69	31.55								
	4-WIRE COPPER LOOP																
		4-Wire Copper Loop-Designed including manual service inquiry and facility reservation - Zone 1		1	UCL	UCL4S	16.65	44.69	31.55	0.00	0.00						
		4-Wire Copper Loop-Designed including manual service inquiry and facility reservation - Zone 2		2	UCL	UCL4S	19.22	44.69	31.55	0.00	0.00						
		4-Wire Copper Loop-Designed including manual service inquiry and facility reservation - Zone 3		3	UCL	UCL4S	30.55	44.69	31.55	0.00	0.00						
		4-Wire Copper Loop-Designed without manual service inquiry and facility reservation - Zone 1		1	UCL	UCL4W	16.65	44.69	31.55	0.00	0.00						
		4-Wire Copper Loop-Designed without manual service inquiry and facility reservation - Zone 2		2	UCL	UCL4W	19.22	44.69	31.55	0.00	0.00						
		4-Wire Copper Loop-Designed without manual service inquiry and facility reservation - Zone 3		3	UCL	UCL4W	30.55	44.69	31.55	0.00	0.00						
		Order Coordination for Unbundled Copper Loops (per loop)			UCL	UCLMC		18.90	18.90								
		Unbundled Loop Service Rearrangement, change in loop facility, per circuit			UCL	UREWO		44.69	31.55								
		Order Coordination for Specified Conversion Time (per LSR)			UEA, UDN, UAL, UHL, UDL, USL	OCOSL		57.73									
	Rearrangements																
		EEL to UNE-L Retermination, per 2 Wire Unbundled Voice Loop-SL2			UEA	UREEL		79.85	24.65								
		EEL to UNE-L Retermination, per 4 Wire Unbundled Voice Loop			UEA	UREEL		79.85	24.65								
		EEL to UNE-L Retermination, per 2 Wire ISDN Loop			UDN	UREEL		120.98	33.02								
		EEL to UNE-L Retermination, per 4 Wire Unmbundled Digital Loop			UDL	UREEL		101.95	49.66								
		EEL to UNE-L Retermination, per 4 Wire Unbundled DS1 Loop			USL	UREEL		100.91	42.97								
UNE LOOP COMMINGLING																	
	2-WIRE ANALOG VOICE GRADE LOOP - COMMINGLING																

UNBUNDLED NETWORK ELEMENTS - Georgia																	Att: 2 Exh: A
CATEGORY		RATE ELEMENTS	Interim	Zone	BCS	USOC	RATES($)					Svc Order Submitted Elec per LSR	Svc Order Submitted Manually per LSR	Incremental Charge - Manual Svc Order vs. Electronic-1st	Incremental Charge - Manual Svc Order vs. Electronic-Add'l	Incremental Charge - Manual Svc Order vs. Electronic-Disc 1st	Incremental Charge - Manual Svc Order vs. Electronic-Disc Add'l
							Rec	Nonrecurring		Nonrecurring Disconnect		OSS Rates($)					
								First	Add'l	First	Add'l	SOMEC	SOMAN	SOMAN	SOMAN	SOMAN	SOMAN
		2-Wire Analog Voice Grade Loop - Service Level 2 w/Loop or Ground Start Signaling - Zone 1		1	NTCVG	UEAL2	13.32	79.78	24.62	18.90	7.86						
		2-Wire Analog Voice Grade Loop - Service Level 2 w/Loop or Ground Start Signaling - Zone 2		2	NTCVG	UEAL2	18.66	79.78	24.62	18.90	7.86						
		2-Wire Analog Voice Grade Loop - Service Level 2 w/Loop or Ground Start Signaling - Zone 3		3	NTCVG	UEAL2	36.33	79.78	24.62	18.90	7.86						
		2-Wire Analog Voice Grade Loop - Service Level 2 w/Reverse Battery Signaling - Zone 1		1	NTCVG	UEAR2	13.32	79.78	24.62	18.90	7.86						
		2-Wire Analog Voice Grade Loop - Service Level 2 w/Reverse Battery Signaling - Zone 2		2	NTCVG	UEAR2	18.66	79.78	24.62	18.90	7.86						
		2-Wire Analog Voice Grade Loop - Service Level 2 w/Reverse Battery Signaling - Zone 3		3	NTCVG	UEAR2	36.33	79.78	24.62	18.90	7.86						
		Switch-As-Is Conversion rate per UNE Loop, Single LSR, (per DS0)			NTCVG	URESL		6.54	6.54								
		Switch-As-Is Conversion rate per UNE Loop, Spreadsheet, (per DS0)			NTCVG	URESP		6.54	6.54								
		Unbundled Loop Service Rearrangement, change in loop facility, per circuit			NTCVG	UREWO		87.72	36.36								
		Loop Tagging - Service Level 2 (SL2)			NTCVG	URETL		11.19	1.10								
	4-WIRE ANALOG VOICE GRADE LOOP																
		4-Wire Analog Voice Grade Loop - Zone 1		1	NTCVG	UEAL4	21.04	92.92	28.14	19.50	8.12						
		4-Wire Analog Voice Grade Loop - Zone 2		2	NTCVG	UEAL4	24.49	92.92	28.14	19.50	8.12						
		4-Wire Analog Voice Grade Loop - Zone 3		3	NTCVG	UEAL4	33.40	92.92	28.14	19.50	8.12						
		Switch-As-Is Conversion rate per UNE Loop, Single LSR, (per DS0)			NTCVG	URESL		6.54	6.54								
		Switch-As-Is Conversion rate per UNE Loop, Spreadsheet, (per DS0)			NTCVG	URESP		6.54	6.54								
		Unbundled Loop Service Rearrangement, change in loop facility, per circuit			NTCVG	UREWO		87.72	36.36								
	4-WIRE DS1 DIGITAL LOOP - COMMINGLING																
		4-Wire DS1 Digital Loop - Zone 1		1	NTCD1	USLXX	49.41	211.72	72.42	38.20	7.19						
		4-Wire DS1 Digital Loop - Zone 2		2	NTCD1	USLXX	52.55	211.72	72.42	38.20	7.19						
		4-Wire DS1 Digital Loop - Zone 3		3	NTCD1	USLXX	68.40	211.72	72.42	38.20	7.19						
		Switch-As-Is Conversion rate per UNE Loop, Single LSR, (per DS1)			NTCD1	URESL		6.54	6.54								
		Switch-As-Is Conversion rate per UNE Loop, Spreadsheet, (per DS1)			NTCD1	URESP		6.54	6.54								
		Unbundled Loop Service Rearrangement, change in loop facility, per circuit			NTCD1	UREWO		100.91	42.97								
	4-WIRE 19.2, 56 OR 64 KBPS DIGITAL GRADE LOOP - COMMINGLING																
		4 Wire Unbundled Digital Loop 2.4 Kbps - Zone 1		1	NTCUD	UDL2X	25.81	196.47	36.96	18.80	7.19						
		4 Wire Unbundled Digital Loop 2.4 Kbps - Zone 2		2	NTCUD	UDL2X	31.54	196.47	36.96	18.80	7.19						
		4 Wire Unbundled Digital Loop 2.4 Kbps - Zone 3		3	NTCUD	UDL2X	42.38	196.47	36.96	18.80	7.19						
		4 Wire Unbundled Digital Loop 4.8 Kbps - Zone 1		1	NTCUD	UDL4X	25.81	196.47	36.96	18.80	7.19						
		4 Wire Unbundled Digital Loop 4.8 Kbps - Zone 2		2	NTCUD	UDL4X	31.54	196.47	36.96	18.80	7.19						
		4 Wire Unbundled Digital Loop 4.8 Kbps - Zone 3		3	NTCUD	UDL4X	42.38	196.47	36.96	18.80	7.19						
		4 Wire Unbundled Digital Loop 9.6 Kbps - Zone 1		1	NTCUD	UDL9X	25.81	196.47	36.96	18.80	7.19						
		4 Wire Unbundled Digital Loop 9.6 Kbps - Zone 2		2	NTCUD	UDL9X	31.54	196.47	36.96	18.80	7.19						
		4 Wire Unbundled Digital Loop 9.6 Kbps - Zone 3		3	NTCUD	UDL9X	42.38	196.47	36.96	18.80	7.19						
		4 Wire Unbundled Digital 19.2 Kbps - Zone 1		1	NTCUD	UDL19	25.81	196.47	36.96	18.80	7.19						
		4 Wire Unbundled Digital 19.2 Kbps - Zone 2		2	NTCUD	UDL19	31.54	196.47	36.96	18.80	7.19						
		4 Wire Unbundled Digital 19.2 Kbps - Zone 3		3	NTCUD	UDL19	42.38	196.47	36.96	18.80	7.19						
		4 Wire Unbundled Digital Loop 56 Kbps - Zone 1		1	NTCUD	UDL56	25.81	196.47	36.96	18.80	7.19						
		4 Wire Unbundled Digital Loop 56 Kbps - Zone 2		2	NTCUD	UDL56	31.54	196.47	36.96	18.80	7.19						
		4 Wire Unbundled Digital Loop 56 Kbps - Zone 3		3	NTCUD	UDL56	42.38	196.47	36.96	18.80	7.19						
		4 Wire Unbundled Digital Loop 64 Kbps - Zone 1		1	NTCUD	UDL64	25.81	196.47	36.96	18.80	7.19						
		4 Wire Unbundled Digital Loop 64 Kbps - Zone 2		2	NTCUD	UDL64	31.54	196.47	36.96	18.80	7.19						
		4 Wire Unbundled Digital Loop 64 Kbps - Zone 3		3	NTCUD	UDL64	42.38	196.47	36.96	18.80	7.19						
		Switch-As-Is Conversion rate per UNE Loop, Single LSR, (per DS0)			NTCUD	URESL		6.54	6.54								
		Switch-As-Is Conversion rate per UNE Loop, Spreadsheet, (per DS0)			NTCUD	URESP		6.54	6.54								
		Unbundled Loop Service Rearrangement, change in loop facility, per circuit			NTCUD	UREWO		101.95	49.66								

UNBUNDLED NETWORK ELEMENTS - Georgia																	Att: 2 Exh: A
CATEGORY		RATE ELEMENTS	Interim	Zone	BCS	USOC	RATES($)					Svc Order Submitted Elec per LSR	Svc Order Submitted Manually per LSR	Incremental Charge - Manual Svc Order vs. Electronic-1st	Incremental Charge - Manual Svc Order vs. Electronic-Add'l	Incremental Charge - Manual Svc Order vs. Electronic-Disc 1st	Incremental Charge - Manual Svc Order vs. Electronic-Disc Add'l
							Rec	Nonrecurring		Nonrecurring Disconnect		OSS Rates($)					
								First	Add'l	First	Add'l	SOMEC	SOMAN	SOMAN	SOMAN	SOMAN	SOMAN
		Order Coordination for Specified Conversion Time (per LSR)			NTCVG, NTCUD, NTCD1	OCOSL		57.73									
End-to-End Testing																	
MAINTENANCE OF SERVICE																	
		Maintenance of Service Charge, Basic Time, per half hour			UDC, UEA, UDL, UDN, USL, UAL, UHL, UCL, NTCVG, NTCUD, NTCD1, U1TD1, U1TD3, U1TDX, U1TS1, U1TVX, UDF, UDFCX, UDLSX, UE3, ULDD1, ULDD3, ULDDX, ULDS1, ULDVX, UNC1X, UNC3X, UNCDX, UNCSX, UNCVX, ULS	MVVBT		80.00	55.00								
		Maintenance of Service Charge, Overtime, per half hour			UDC, UEA, UDL, UDN, USL, UAL, UHL, UCL, NTCVG, NTCUD, NTCD1, U1TD1, U1TD3, U1TDX, U1TS1, U1TVX, UDF, UDFCX, UDLSX, UE3, ULDD1, ULDD3, ULDDX, ULDS1, ULDVX, UNC1X, UNC3X, UNCDX, UNCSX, UNCVX, ULS	MVVOT		90.00	65.00								
		Maintenance of Service Charge, Premium, per half hour			UDC, UEA, UDL, UDN, USL, UAL, UHL, UCL, NTCVG, NTCUD, NTCD1, U1TD1, U1TD3, U1TDX, U1TS1, U1TVX, UDF, UDFCX, UDLSX, UE3, ULDD1, ULDD3, ULDDX, ULDS1, ULDVX, UNC1X, UNC3X, UNCDX, UNCSX, UNCVX, ULS	MVVPT		100.00	75.00								
LOOP MODIFICATION																	
		Unbundled Loop Modification, Removal of Load Coils - 2 Wire pair less than or equal to 18k ft, per Unbundled Loop			UAL, UHL, UCL, UEQ, ULS, UEA, UEANL, UEPSR, UEPSB	ULM2L		29.97									
		Unbundled Loop Modification Removal of Load Coils - 4 Wire less than or equal to 18K ft, per Unbundled Loop			UHL, UCL, UEA	ULM4L		68.11									
		Unbundled Loop Modification Removal of Bridged Tap Removal, per Unbundled Loop			UAL, UHL, UCL, UEQ, ULS, UEA, UEANL, UEPSR, UEPSB	ULMBT		17.91									
SUB-LOOPS																	
	Sub-Loop Distribution																
		Sub-Loop - Per Cross Box Location - CLEC Feeder Facility Set-Up			UEANL, UEF	USBSA		255.51									
		Sub-Loop - Per Cross Box Location - Per 25 Pair Panel Set-Up			UEANL, UEF	USBSB		7.29									

UNBUNDLED NETWORK ELEMENTS - Georgia																	Att: 2 Exh: A
CATEGORY		RATE ELEMENTS	Interim	Zone	BCS	USOC	RATES($)					Svc Order Submitted Elec per LSR	Svc Order Submitted Manually per LSR	Incremental Charge - Manual Svc Order vs. Electronic-1st	Incremental Charge - Manual Svc Order vs. Electronic-Add'l	Incremental Charge - Manual Svc Order vs. Electronic-Disc 1st	Incremental Charge - Manual Svc Order vs. Electronic-Disc Add'l
							Rec	Nonrecurring		Nonrecurring Disconnect		OSS Rates($)					
								First	Add'l	First	Add'l	SOMEC	SOMAN	SOMAN	SOMAN	SOMAN	SOMAN
		Sub-Loop - Per Building Equipment Room - CLEC Feeder Facility Set-Up			UEANL	USBSC		174.92									
		Sub-Loop - Per Building Equipment Room - Per 25 Pair Panel Set-Up			UEANL	USBSD		51.56									
		Unbundled Sub-Loops, Riser Cable, 2-Wire per Loop, Working and Spare Loop Activation			UEANL	USBRC	3.71	28.43	3.85	2.20	0.01						
		Unbundled Sub-Loops, Riser Cable, 4-Wire per Loop, Working and Spare Loop Activation			UEANL	USBRD	7.90	31.04	4.79	2.27	0.01						
		Sub-Loop Distribution Per 2-Wire Analog Voice Grade Loop - Zone 1		1	UEANL	USBN2	7.45	28.43	3.85	2.20	0.01						
		Sub-Loop Distribution Per 2-Wire Analog Voice Grade Loop - Zone 2		2	UEANL	USBN2	11.18	28.43	3.85	2.20	0.01						
		Sub-Loop Distribution Per 2-Wire Analog Voice Grade Loop - Zone 3		3	UEANL	USBN2	21.46	28.43	3.85	2.20	0.01						
		Sub-Loop Distribution Per 4-Wire Analog Voice Grade Loop - Zone 1		1	UEANL	USBN4	6.91	31.04	4.79	2.27	0.01						
		Sub-Loop Distribution Per 4-Wire Analog Voice Grade Loop - Zone 2		2	UEANL	USBN4	10.98	31.04	4.79	2.27	0.01						
		Sub-Loop Distribution Per 4-Wire Analog Voice Grade Loop - Zone 3		3	UEANL	USBN4	20.32	31.04	4.79	2.27	0.01						
		Order Coordination for Unbundled Sub-Loops, per sub-loop pair			UEANL	USBMC		18.90	18.90								
		Sub-Loop 2-Wire Intrabuilding Network Cable (INC)			UEANL	USBR2	3.71	28.43	3.85	2.20	0.01						
		Order Coordination for Unbundled Sub-Loops, per sub-loop pair			UEANL	USBMC		18.90	18.90								
		Sub-Loop 4-Wire Intrabuilding Network Cable (INC)			UEANL	USBR4	7.90	31.04	4.79	2.27	0.01						
		Order Coordination for Unbundled Sub-Loops, per sub-loop pair			UEANL	USBMC		18.90	18.90								
		Loop Testing - Basic 1st Half Hour			UEANL	URET1		26.64	0.00								
		Loop Testing - Basic Additional Half Hour			UEANL	URETA		15.15	15.15								
		2 Wire Copper Unbundled Sub-Loop Distribution - Zone 1		1	UEF	UCS2X	6.88	28.43	3.85	2.20	0.01						
		2 Wire Copper Unbundled Sub-Loop Distribution - Zone 2		2	UEF	UCS2X	8.32	28.43	3.85	2.20	0.01						
		2 Wire Copper Unbundled Sub-Loop Distribution - Zone 3		3	UEF	UCS2X	10.26	28.43	3.85	2.20	0.01						
		Order Coordination for Unbundled Sub-Loops, per sub-loop pair			UEF	USBMC		18.90	18.90								
		4 Wire Copper Unbundled Sub-Loop Distribution - Zone 1		1	UEF	UCS4X	7.55	31.04	4.79	2.27	0.01						
		4 Wire Copper Unbundled Sub-Loop Distribution - Zone 2		2	UEF	UCS4X	7.12	31.04	4.79	2.27	0.01						
		4 Wire Copper Unbundled Sub-Loop Distribution - Zone 3		3	UEF	UCS4X	10.26	31.04	4.79	2.27	0.01						
		Order Coordination for Unbundled Sub-Loops, per sub-loop pair			UEF	USBMC		18.90	18.90								
		Loop tagging Service Level 1, Unbundled Copper Loop, Non-Designed and Distribution Subloops			UEF, UEANL	URETL		8.92	0.88								
		Loop Testing - Basic 1st Half Hour			UEF	URET1		26.64	0.00								
		Loop Testing - Basic Additional Half Hour			UEF	URETA		15.15	15.15								
	Unbundled Sub-Loop Modification																
		Unbundled Sub-Loop Modification - 2-W Copper Dist Load Coil/Equip Removal per 2-W PR			UEF	ULM2X		0.00	0.00								
		Unbundled Sub-loop Modification - 4-W Copper Dist Load Coil/Equip Removal per 4-W PR			UEF	ULM4X		0.00	0.00								
		Unbundled Loop Modification, Removal of bridge Tap, per unbundled loop			UEF	ULMBT		0.00	0.00								
	Unbundled Network Terminating Wire (UNTW)																
		Unbundled Network Terminating Wire (UNTW) per Pair			UENTW	UENPP	0.5325	25.10	12.27								
	Network Interface Device (NID)																
		Network Interface Device (NID) - 1-2 lines			UENTW	UND12		32.82	20.67								
		Network Interface Device (NID) - 1-6 lines			UENTW	UND16		55.97	43.82								
		Network Interface Device Cross Connect - 2 W			UENTW	UNDC2		2.45	2.45								
		Network Interface Device Cross Connect - 4W			UENTW	UNDC4		2.45	2.45								
UNE OTHER, PROVISIONING ONLY - NO RATE																	

UNBUNDLED NETWORK ELEMENTS - Georgia																	Att: 2 Exh: A
CATEGORY		RATE ELEMENTS	Interim	Zone	BCS	USOC	RATES($)					Svc Order Submitted Elec per LSR	Svc Order Submitted Manually per LSR	Incremental Charge - Manual Svc Order vs. Electronic-1st	Incremental Charge - Manual Svc Order vs. Electronic-Add'l	Incremental Charge - Manual Svc Order vs. Electronic-Disc 1st	Incremental Charge - Manual Svc Order vs. Electronic-Disc Add'l
							Rec	Nonrecurring		Nonrecurring Disconnect		OSS Rates($)					
								First	Add'l	First	Add'l	SOMEC	SOMAN	SOMAN	SOMAN	SOMAN	SOMAN
		Unbundled Contact Name, Provisioning Only - no rate			UAL, UCL, UDC, UDL, UDN, UEA, UHL, UEANL, UEF, UEQ, UENTW, NTCVG, NTCUD, NTCD1, USL,	UNECN	0.00	0.00									
		Unbundled DS1 Loop - Superframe Format Option - no rate			USL, NTCD1	CCOSF		0.00									
		Unbundled DS1 Loop - Expanded Superframe Format option - no rate			USL, NTCD1	CCOEF		0.00									
		NID - Dispatch and Service Order for NID installation			UENTW	UNDBX	0.00	0.00									
		UNTW Circuit Establishment, Provisioning Only - No Rate			UENTW	UENCE	0.00	0.00									
LOOP MAKE-UP																	
		Loop Makeup - Preordering Without Reservation, per working or spare facility queried (Manual).			UMK	UMKLW		15.18	15.18								
		Loop Makeup - Preordering With Reservation, per spare facility queried (Manual).			UMK	UMKLP		19.83	19.83								
		Loop Makeup--With or Without Reservation, per working or spare facility queried (Mechanized)			UMK	UMKMQ		0.823	0.823								
LINE SPLITTING																	
	END USER ORDERING-CENTRAL OFFICE BASED																
		Line Splitting - per line activation DLEC owned splitter			UEPSR UEPSB	UREOS	0.61										
		Line Splitting - per line activation AT&T owned - physical			UEPSR UEPSB	UREBP	0.0197	34.43	22.35	10.38	7.34						
		Line Splitting - per line activation AT&T owned - virtual			UEPSR UEPSB	UREBV	0.0188	34.43	22.35	10.38	7.34						
	END USER ORDERING - REMOTE SITE LINE SPLITTING																
		Remote Site Shared Loop Line Activation for End Users - CLEC Owned Splitter			UEPSR UEPSB	URERS	0.61	57.13	23.12	7.11	7.11						
		Remote Site Shared Loop - Subsequent Activity - CLEC Owned Splitter			UEPSR UEPSB	URERA		54.10	21.46								
	UNBUNDLED EXCHANGE ACCESS LOOP																
	2-WIRE ANALOG VOICE GRADE LOOP																
		Remote Site 2 Wire Analog Voice Grade Loop -Service Level 1-Line Splitting - CLEC Owned Splitter - Zone 1		1	UEPSR UEPSB	UEARS	6.52	28.46	3.85	2.20	0.01						
		Remote Site 2 Wire Analog Voice Grade Loop -Service Level 1-Line Splitting - CLEC Owned Splitter - Zone 2		2	UEPSR UEPSB	UEARS	10.18	28.46	3.85	2.20	0.01						
		Remote Site 2 Wire Analog Voice Grade Loop -Service Level 1-Line Splitting - CLEC Owned Splitter - Zone 3		3	UEPSR UEPSB	UEARS	19.51	28.46	3.85	2.20	0.01						
	UNE Loop Rates for Line Splitting (In Ga. PSC ordered the line splitting loop USOCs match the lower port- loop combo rates UEPLX)																
		2-Wire Voice Grade Loop (SL1) for Line Splitting - Zone 1	I	1	UEPSR UEPSB	UEALS	10.98	10.04	7.35	1.37	1.28						
		2-Wire Voice Grade Loop (SL1) for Line Splitting - Zone 1	I	1	UEPSR UEPSB	UEABS	10.98	10.04	7.35	1.37	1.28						
		2-Wire Voice Grade Loop (SL1) for Line Splitting - Zone 2	I	2	UEPSR UEPSB	UEALS	16.30	10.04	7.35	1.37	1.28						
		2-Wire Voice Grade Loop (SL1) for Line Splitting - Zone 2	I	2	UEPSR UEPSB	UEABS	16.30	10.04	7.35	1.37	1.28						
		2-Wire Voice Grade Loop (SL1)for Line Splitting - Zone 3	I	3	UEPSR UEPSB	UEALS	34.73	10.04	7.35	1.37	1.28						
		2-Wire Voice Grade Loop (SL1)for Line Splitting - Zone 3	I	3	UEPSR UEPSB	UEABS	34.73	10.04	7.35	1.37	1.28						
	PHYSICAL COLLOCATION																
		Physical Collocation-2 Wire Cross Connects (Loop) for Line Splitting			UEPSR UEPSB	PE1LS	0.0202	0.00	0.00								
	VIRTUAL COLLOCATION																
		Virtual Collocation-2 Wire Cross Connects (Loop) for Line Splitting			UEPSR UEPSB	VE1LS	0.0192	0.00	0.00	0.00	0.00						
	LINE SHARING																
	NOTE: The Line Sharing monthly recurring rates for all installations completed on or after October 02, 2003 shall be billed as follows:																
	SPLITTERS-CENTRAL OFFICE BASED																
		Line Sharing Splitter, per System 96 Line Capacity			ULS	ULSDA	117.18	243.66	0.00	90.11	0.00						
		Line Sharing Splitter, per System 24 Line Capacity			ULS	ULSDB	29.30	243.66	0.00	90.11	0.00						
		Line Sharing Splitter, Per System, 8 Line Capacity			ULS	ULSD8	9.77	243.66	0.00	90.11	0.00						
		Line Sharing-DLEC Owned Splitter in CO-CFA activaton-deactivation (per LSOD)			ULS	ULSDG		72.34	0.00	68.76	0.00						
LINE SHARING																	
	END USER ORDERING-CENTRAL OFFICE BASED LINE SHARING																
		Line Sharing - per Line Activation (AT&T Owned splitter)			ULS	ULSDC	0.61	10.51	7.70	7.00	4.20						
		Line Sharing - per Line Activation (AT&T Owned splitter)			ULS	ULSDT	6.50	24.53	0.00	12.26	0.00						
		Line Sharing - per Subsequent Activity per Line Rearrangement(AT&T Owned Splitter			ULS	ULSDS		48.91	17.86	22.87	2.28						

UNBUNDLED NETWORK ELEMENTS - Georgia																	Att: 2 Exh: A
CATEGORY		RATE ELEMENTS	Interim	Zone	BCS	USOC	RATES($)					Svc Order Submitted Elec per LSR	Svc Order Submitted Manually per LSR	Incremental Charge - Manual Svc Order vs. Electronic-1st	Incremental Charge - Manual Svc Order vs. Electronic-Add'l	Incremental Charge - Manual Svc Order vs. Electronic-Disc 1st	Incremental Charge - Manual Svc Order vs. Electronic-Disc Add'l
							Rec	Nonrecurring		Nonrecurring Disconnect		OSS Rates($)					
								First	Add'l	First	Add'l	SOMEC	SOMAN	SOMAN	SOMAN	SOMAN	SOMAN
		Line Sharing - per Subsequent Activity per Line Rearrangement(AT&T Owned Splitter			ULS	ULSCS		36.23	13.23	16.94	1.69						
		Line Sharing - per Line Activation (DLEC owned Splitter)			ULS	ULSCC		29.88	16.28	12.08	7.34						
		Line Sharing - per Line Activation (DLEC owned Splitter)			ULS	ULSCT		29.88	16.28	12.08	7.34						
	REMOTE SITE HIGH FREQUENCY SPECTRUM																
	SPLITTERS-REMOTE SITE																
		Remote Site Line Share AT&T Owned Splitter, 24 Port			ULS	ULSRB	31.64	90.65		64.74							
		Remote Site Line Share Line Activationfor End User Served at RS, AT&T Splitter			ULS	ULSRT		43.54	17.28	6.82	3.82						
		Remote Site Line Share Cable Pair Activation CLEC Owned at RS and Deactivation			ULS	ULSTG		75.02		47.17							
		MAINTENANCE															
		No Trouble Found - per 1/2 hour increments - Basic						80.00	0.00								
		No Trouble Found - per 1/2 hour increments - Overtime						120.00	0.00								
		No Trouble Found - per 1/2 hour increments - Premium						160.00	0.00								
UNBUNDLED DEDICATED TRANSPORT																	
	INTEROFFICE CHANNEL - DEDICATED TRANSPORT																
		Interoffice Channel - 2-Wire Voice Grade - per mile			U1TVX	1L5XX	0.0059										
		Interoffice Channel - 2-Wire Voice Grade - Facility Termination			U1TVX	U1TV2	13.15	48.41	19.46	16.56	4.99						
		Interoffice Channel - 2-Wire Voice Grade Rev Bat. - per mile			U1TVX	1L5XX	0.0059										
		Interoffice Channel - 2-Wire VG Rev Bat. - Facility Termination			U1TVX	U1TR2	13.15	48.41	19.46	16.56	4.99						
		Interoffice Channel - 4-Wire Voice Grade - per mile			U1TVX	1L5XX	0.0059										
		Interoffice Channel - 4- Wire Voice Grade - Facility Termination			U1TVX	U1TV4	11.01	48.41	19.46	16.56	4.99						
		Interoffice Channel - 56 kbps - per mile			U1TDX	1L5XX	0.0059										
		Interoffice Channel - 56 kbps - Facility Termination			U1TDX	U1TD5	8.00	48.41	19.46	16.56	4.99						
		Interoffice Channel - 64 kbps - per mile			U1TDX	1L5XX	0.0059										
		Interoffice Channel - 64 kbps - Facility Termination			U1TDX	U1TD6	8.00	48.41	19.46	16.56	4.99						
		Interoffice Channel - DS1 - per mile			U1TD1	1L5XX	0.1199										
		Interoffice Channel - DS1 - Facility Termination			U1TD1	U1TF1	34.93	110.92	80.20	31.33	21.71						
		Interoffice Channel - DS3 - per mile			U1TD3	1L5XX	2.63										
		Interoffice Channel - DS3 - Facility Termination			U1TD3	U1TF3	349.42	320.16	86.24	66.71	52.76						
		Interoffice Channel - STS-1 - per mile			U1TS1	1L5XX	2.63										
		Interoffice Channel - STS-1 - Facility Termination			U1TS1	U1TFS	366.43	320.16	86.24	66.71	52.76						
	UNBUNDLED DARK FIBER																
		Dark Fiber - Interoffice Transport, Per Four Fiber Strands, Per Route Mile Or Fraction Thereof			UDF, UDFCX	1L5DF	24.17										
		Dark Fiber - Interoffice Transport, Per Four Fiber Strands, Per Route Mile Or Fraction Thereof			UDF, UDFCX	UDF14		1,774.79	89.66	73.57	18.69						
HIGH CAPACITY UNBUNDLED LOCAL LOOP																	
	DS-3/STS-1 UNBUNDLED LOCAL LOOP - Stand Alone																
		DS3 Unbundled Local Loop - per mile			UE3	1L5ND	11.40										
		DS3 Unbundled Local Loop - Facility Termination			UE3	UE3PX	258.44	1,751.51	131.77	112.80	75.81						
		STS-1Unbundled Local Loop - per mile			UDLSX	1L5ND	11.40										
		STS-1 Unbundled Local Loop - Facility Termination			UDLSX	UDLS1	349.42	1,751.51	131.77	112.80	75.81						
ENHANCED EXTENDED LINK (EELs)																	
	Network Elements Used in Combinations																
		2-Wire VG Loop (SL2) in Combination - Zone 1		1	UNCVX	UEAL2	13.32	195.75	36.35	18.40	6.86						
		2-Wire VG Loop (SL2) in Combination - Zone 2		2	UNCVX	UEAL2	18.66	195.75	36.35	18.40	6.86						
		2-Wire VG Loop (SL2) in Combination - Zone 3		3	UNCVX	UEAL2	36.33	195.75	36.35	18.40	6.86						
		4-Wire Analog Voice Grade Loop in Combination - Zone 1		1	UNCVX	UEAL4	21.04	195.75	36.35	18.40	6.86						
		4-Wire Analog Voice Grade Loop in Combination - Zone 2		2	UNCVX	UEAL4	24.49	195.75	36.35	18.40	6.86						
		4-Wire Analog Voice Grade Loop in Combination - Zone 3		3	UNCVX	UEAL4	33.40	195.75	36.35	18.40	6.86						
		2-Wire ISDN Loop in Combination - Zone 1		1	UNCNX	U1L2X	22.73	195.75	36.35	18.40	6.86						
		2-Wire ISDN Loop in Combination - Zone 2		2	UNCNX	U1L2X	29.11	195.75	36.35	18.40	6.86						
		2-Wire ISDN Loop in Combination - Zone 3		3	UNCNX	U1L2X	46.42	195.75	36.35	18.40	6.86						
		4-Wire 56Kbps Digital Grade Loop in Combination - Zone 1		1	UNCDX	UDL56	25.81	195.75	36.35	18.40	6.86						
		4-Wire 56Kbps Digital Grade Loop in Combination - Zone 2		2	UNCDX	UDL56	31.54	195.75	36.35	18.40	6.86						
		4-Wire 56Kbps Digital Grade Loop in Combination - Zone 3		3	UNCDX	UDL56	42.38	195.75	36.35	18.40	6.86						
		4-Wire 64Kbps Digital Grade Loop in Combination - Zone 1		1	UNCDX	UDL64	25.81	195.75	36.35	18.40	6.86						
		4-Wire 64Kbps Digital Grade Loop in Combination - Zone 2		2	UNCDX	UDL64	31.54	195.75	36.35	18.40	6.86						
		4-Wire 64Kbps Digital Grade Loop in Combination - Zone 3		3	UNCDX	UDL64	42.38	195.75	36.35	18.40	6.86						
		4-Wire DS1 Digital Loop in Combination - Zone 1		1	UNC1X	USLXX	49.41	209.25	70.37	37.87	6.86						

UNBUNDLED NETWORK ELEMENTS - Georgia

Att: 2 Exh: A

CATEGORY		RATE ELEMENTS	Interim	Zone	BCS	USOC	RATES($)					Svc Order Submitted Elec per LSR	Svc Order Submitted Manually per LSR	Incremental Charge - Manual Svc Order vs. Electronic-1st	Incremental Charge - Manual Svc Order vs. Electronic-Add'l	Incremental Charge - Manual Svc Order vs. Electronic-Disc 1st	Incremental Charge - Manual Svc Order vs. Electronic-Disc Add'l
							Rec	Nonrecurring		Nonrecurring Disconnect		OSS Rates($)					
								First	Add'l	First	Add'l	SOMEC	SOMAN	SOMAN	SOMAN	SOMAN	SOMAN
		4-Wire DS1 Digital Loop in Combination - Zone 2		2	UNC1X	USLXX	52.55	209.25	70.37	37.87	6.86						
		4-Wire DS1 Digital Loop in Combination - Zone 3		3	UNC1X	USLXX	68.40	209.25	70.37	37.87	6.86						
		DS3 Local Loop in combination - per mile			UNC3X	1L5ND	11.40										
		DS3 Local Loop in combination - Facility Termination			UNC3X	UE3PX	258.44	1,259.23	628.22	41.49	20.74						
		STS-1 Local Loop in combination - per mile			UNCSX	1L5ND	11.40										
		STS-1 Local Loop in combination - Facility Termination			UNCSX	UDLS1	349.42	1,259.23	628.22	41.49	20.74						
		Interoffice Channel in combination - 2-wire VG - per mile			UNCVX	1L5XX	0.0059										
		Interoffice Channel in combination - 2-wire VG - Facility Termination			UNCVX	U1TV2	13.15	66.47	33.57	43.38	27.57						
		Interoffice Channel in combination - 4-wire VG - per mile			UNCVX	1L5XX	0.0059										
		Interoffice Channel in combination - 4-wire VG - Facility Termination			UNCVX	U1TV4	10.78	66.47	33.57	43.38	27.57						
		Interoffice Channel in combination - 4-wire 56 kbps - per mile			UNCDX	1L5XX	0.0059										
		Interoffice Channel in combination - 4-wire 56 kbps - Facility Termination			UNCDX	U1TD5	8.00	66.47	33.57	43.38	27.57						
		Interoffice Channel in combination - 4-wire 64 kbps - per mile			UNCDX	1L5XX	0.0059										
		Interoffice Channel in combination - 4-wire 64 kbps - Facility Termination			UNCDX	U1TD6	8.00	66.47	33.57	43.38	27.57						
		Interoffice Channel in combination - DS1 - per mile			UNC1X	1L5XX	0.1199										
		Interoffice Channel in combination - DS1 Facility Termination			UNC1X	U1TF1	34.93	87.67	45.69	43.76	27.95						
		Interoffice Channel in combination - DS3 - per mile			UNC3X	1L5XX	2.63										
		Interoffice Channel in combination - DS3 - Facility Termination			UNC3X	U1TF3	349.42	325.59	76.99	49.51	32.85						
		Interoffice Channel in combination - STS-1 - per mile			UNCSX	1L5XX	2.63										
		Interoffice Channel in combination - STS-1 Facility Termination			UNCSX	U1TFS	366.43	325.59	76.99	49.51	32.85						
ADDITIONAL NETWORK ELEMENTS																	
	Optional Features & Functions:																
		Clear Channel Capability Extended Frame Option - per DS1	I		U1TD1, ULDD1,UNC1X	CCOEF		0.00									
		Clear Channel Capability Super FrameOption - per DS1	I		U1TD1, ULDD1,UNC1X	CCOSF		0.00									
		Clear Channel Capability (SF/ESF) Option - Subsequent Activity - per DS1	I		ULDD1, U1TD1, UNC1X, USL	NRCCC		184.62	23.78	2.03	0.79						
		C-bit Parity Option - Subsequent Activity - per DS3	i		U1TD3, ULDD3, UE3, UNC3X	NRCC3		218.74	7.66	0.7591	0.00						
		DS1/DS0 Channel System			UNC1X	MQ1	71.23	86.01	0.00	0.00	0.00						
		DS3/DS1Channel System			UNC3X, UNCSX	MQ3	124.39	0.00	0.00	0.00	0.00						
		Voice Grade COCI in combination			UNCVX	1D1VG	0.479	27.30	2.90	16.85	1.04						
		Voice Grade COCI - for 2W-SL2 & 4W Voice Grade Local Loop			UEA	1D1VG	0.479	27.30	2.90	16.85	1.04						
		Voice Grade COCI - for connection to a channelized DS1 Local Channel in the same SWC as collocation			U1TUC	1D1VG	0.479	27.30	2.90	16.85	1.04						
		OCU-DP COCI (2.4-64kbs) in combination			UNCDX	1D1DD	1.02	27.30	2.90	16.85	1.04						
		OCU-DP COCI (2.4-64kbs) - for Unbundled Digital Loop			UDL	1D1DD	1.02	27.30	2.90	16.85	1.04						
		OCU-DP COCI (2.4-64kbs) - for connection to a channelized DS1 Local Channel in the same SWC as collocation			U1TUD	1D1DD	1.02	27.30	2.90	16.85	1.04						
		2-wire ISDN COCI (BRITE) in combination			UNCNX	UC1CA	1.70	27.30	2.90	16.85	1.04						
		2-wire ISDN COCI (BRITE) - for a Local Loop			UDN	UC1CA	1.70	27.30	2.90	16.85	1.04						
		2-wire ISDN COCI (BRITE) - for connection to a channelized DS1 Local Channel in the same SWC as collocation			U1TUB	UC1CA	1.70	27.30	2.90	16.85	1.04						
		DS1 COCI in combination			UNC1X	UC1D1	7.50	27.30	2.90	16.85	1.04						
		DS1 COCI - for Stand Alone Local Channel			ULDD1	UC1D1	7.50	27.30	2.90	16.85	1.04						
		DS1 COCI - for Stand Alone Interoffice Channel			U1TD1	UC1D1	7.50	27.30	2.90	16.85	1.04						
		DS1 COCI - for DS1 Local Loop			USL, NTCD1	UC1D1	7.50	27.30	2.90	16.85	1.04						
		DS1 COCI - for connection to a channelized DS1 Local Channel in the same SWC as collocation			U1TUA	UC1D1	7.50	27.30	2.90	16.85	1.04						
		Wholesale - UNE, Switch-As-Is Conversion Charge			UNCVX, UNCDX, UNC1X, UNC3X, UNCSX, UDFCX, XDH1X, HFQC6, XDD2X, XDV6X, XDDFX, XDD4X, HFRST, UNCNX	UNCCC		5.69	5.69	6.60	6.60						

UNBUNDLED NETWORK ELEMENTS - Georgia

Att: 2 Exh: A

CATEGORY	RATE ELEMENTS	Interim	Zone	BCS	USOC	RATES($) Rec	Nonrecurring First	Nonrecurring Add'l	Nonrecurring Disconnect First	Nonrecurring Disconnect Add'l	Svc Order Submitted Elec per LSR	Svc Order Submitted Manually per LSR	Incremental Charge - Manual Svc Order vs. Electronic- 1st	Incremental Charge - Manual Svc Order vs. Electronic- Add'l	Incremental Charge - Manual Svc Order vs. Electronic- Disc 1st	Incremental Charge - Manual Svc Order vs. Electronic- Disc Add'l
											OSS Rates($)					
							First	Add'l	First	Add'l	SOMEC	SOMAN	SOMAN	SOMAN	SOMAN	SOMAN
	Unbundled Misc Rate Element, SNE SAI, Single Network Element - Switch As Is Non-recurring Charge, per circuit (LSR)	I		U1TVX, U1TDX, U1TD1, U1TD3, U1TS1, UDF, UE3	URESL		5.69	5.69	6.60	6.60						
	Unbundled Misc Rate Element, SNE SAI, Single Network Element - Switch As Is Non-recurring Charge, incremental charge per circuit on a spreadsheet	i		U1TVX, U1TDX, U1TD1, U1TD3, U1TS1, UDF, UE3	URESP		5.69	5.69	6.60	6.60						
	Access to DCS - Customer Reconfiguration (FlexServ)															
	Customer Reconfiguration Establishment						1.40		1.63							
	DS1 DCS Termination with DS0 Switching					20.08	24.87	18.91	15.02	11.94						
	DS1 DCS Termination with DS1 Switching					7.24	18.16	12.19	11.13	8.05						
	DS3 DCS Termination with DS1 Switching					128.34	24.87	18.91	15.02	11.94						
	Node (SynchroNet)															
	Node per month			UNCDX	UNCNT	13.98										
	Service Rearrangements															
	NRC - Change in Facility Assignment per circuit Service Rearrangement	I		U1TVX, U1TDX, U1TUC, U1TUD, U1TUB, ULDVX, ULDDX, UNCVX, UNCDX, UNC1X	URETD		100.91	42.97								
	NRC - Change in Facility Assignment per circuit Project Management (added to CFA per circuit if project managed)	I		U1TVX, U1TDX, U1TUC, U1TUD, U1TUB, ULDVX, ULDDX, UNCVX, UNCDX, UNC1X	URETB		3.68	3.68								
	NRC - Order Coordination Specific Time - Dedicated Transport	I		UNC1X, UNC3X	OCOSR		18.89	18.89								
COMMINGLING																
	Commingling Authorization			UNCVX, UNCDX, UNC1X, UNC3X, UNCSX, U1TD1, U1TD3, U1TS1, UE3, UDLSX, U1TVX, U1TDX, U1TUB, ULDVX, ULDD1, ULDD3, ULDS1	CMGAU	0.00	0.00	0.00	0.00	0.00						
	Commingled (UNE part of single bandwidth circuit and interfaces)															
	Commingled VG COCI			XDV2X	1D1VG	0.479	27.30	2.90	16.85	1.04						
	Commingled Digital COCI			XDV6X	1D1DD	1.02	27.30	2.90	16.85	1.04						
	Commingled ISDN COCI			XDD4X	UC1CA	1.70	27.30	2.90	16.85	1.04						
	Commingled 2-wire VG Interoffice Channel			XDV2X	U1TV2	13.15	66.47	33.57	43.38	27.57						
	Commingled 4-wire VG Interoffice Channel			XDV6X	U1TV4	10.78	66.47	33.57	43.38	27.57						
	Commingled 56kbps Interoffice Channel			XDD4X	U1TD5	8.00	66.47	33.57	43.38	27.57						
	Commingled 64kbps Interoffice Channel			XDD4X	U1TD6	8.00	66.47	33.57	43.38	27.57						
	Commingled VG/DS0 Interoffice Channel Mileage			XDV2X, XDV6X, XDD4X	1L5XX	0.0059										
	Commingled 2-wire Local Loop Zone 1		1	XDV2X	UEAL2	13.32	195.75	36.35	18.40	6.86						
	Commingled 2-wire Local Loop Zone 2		2	XDV2X	UEAL2	18.66	195.75	36.35	18.40	6.86						
	Commingled 2-wire Local Loop Zone 3		3	XDV2X	UEAL2	36.33	195.75	36.35	18.40	6.86						
	Commingled 4-wire Local Loop Zone 1		1	XDV6X	UEAL4	21.04	195.75	36.35	18.40	6.86						
	Commingled 4-wire Local Loop Zone 2		2	XDV6X	UEAL4	24.49	195.75	36.35	18.40	6.86						
	Commingled 4-wire Local Loop Zone 3		3	XDV6X	UEAL4	33.40	195.75	36.35	18.40	6.86						
	Commingled 56kbps Local Loop Zone 1		1	XDD4X	UDL56	25.81	195.75	36.35	18.40	6.86						
	Commingled 56kbps Local Loop Zone 2		2	XDD4X	UDL56	31.54	195.75	36.35	18.40	6.86						
	Commingled 56kbps Local Loop Zone 3		3	XDD4X	UDL56	42.38	195.75	36.35	18.40	6.86						
	Commingled 64kbps Local Loop Zone 1		1	XDD4X	UDL64	25.81	195.75	36.35	18.40	6.86						
	Commingled 64kbps Local Loop Zone 2		2	XDD4X	UDL64	31.54	195.75	36.35	18.40	6.86						
	Commingled 64kbps Local Loop Zone 3		3	XDD4X	UDL64	42.38	195.75	36.35	18.40	6.86						
	Commingled ISDN Local Loop Zone 1		1	XDD4X	U1L2X	22.73	195.75	36.35	18.40	6.86						
	Commingled ISDN Local Loop Zone 2		2	XDD4X	U1L2X	29.11	195.75	36.35	18.40	6.86						
	Commingled ISDN Local Loop Zone 3		3	XDD4X	U1L2X	46.42	195.75	36.35	18.40	6.86						
	Commingled DS1 COCI			XDH1X	UC1D1	7.50	27.30	2.90	16.85	1.04						
	Commingled DS1 Interoffice Channel			XDH1X	U1TF1	34.93	87.67	45.69	43.76	27.95						
	Commingled DS1 Interoffice Channel Mileage			XDH1X	1L5XX	0.1199										
	Commingled DS1/DS0 Channel System			XDH1X	MQ1	71.23	86.01	0.00	0.00	0.00						

UNBUNDLED NETWORK ELEMENTS - Georgia

Att: 2 Exh: A

CATEGORY	RATE ELEMENTS	Interim	Zone	BCS	USOC	RATES($)					Svc Order Submitted Elec per LSR	Svc Order Submitted Manually per LSR	Incremental Charge - Manual Svc Order vs. Electronic-1st	Incremental Charge - Manual Svc Order vs. Electronic-Add'l	Incremental Charge - Manual Svc Order vs. Electronic-Disc 1st	Incremental Charge - Manual Svc Order vs. Electronic-Disc Add'l
						Rec	Nonrecurring		Nonrecurring Disconnect		OSS Rates($)					
							First	Add'l	First	Add'l	SOMEC	SOMAN	SOMAN	SOMAN	SOMAN	SOMAN
	Commingled DS1 Local Loop Zone 1		1	XDH1X	USLXX	49.41	209.25	70.37	37.87	6.86						
	Commingled DS1 Local Loop Zone 2		2	XDH1X	USLXX	52.55	209.25	70.37	37.87	6.86						
	Commingled DS1 Local Loop Zone 3		3	XDH1X	USLXX	68.40	209.25	70.37	37.87	6.86						
	Commingled DS3 Local Loop			HFQC6	UE3PX	258.44	1,751.51	131.77	112.80	75.81						
	Commingled DS3/STS-1 Local Loop Mileage			HFQC6, HFRST	1L5ND	11.40										
	Commingled STS-1 Local Loop			HFRST	UDLS1	349.42	1,751.51	131.77	112.80	75.81						
	Commingled DS3/DS1 Channel System			HFQC6	MQ3	124.39	0.00	0.00	0.00	0.00						
	Commingled DS3 Interoffice Channel			HFQC6	U1TF3	349.42	325.59	76.99	49.51	32.85						
	Commingled DS3 Interoffice Channel Mileage			HFQC6	1L5XX	2.63										
	Commingled STS-1Interoffice Channel			HFRST	U1TFS	366.43	325.59	76.99	49.51	32.85						
	Commingled STS-1Interoffice Channel Mileage			HFRST	1L5XX	2.63										
	Commingled Dark Fiber - Interoffice Transport, Per Four Fiber Strands, Per Route Mile Or Fraction Thereof			HEQDL	1L5DF	24.17										
	Commingled Dark Fiber - Interoffice Transport, Per Four Fiber Strands, Per Route Mile Or Fraction Thereof			HEQDL	UDF14		1,774.79	89.66	73.57	18.69						
	UNE to Commingled Conversion Tracking			XDH1X, HFQC6	CMGUN	0.00	0.00	0.00	0.00	0.00						
	SPA to Commingled Conversion Tracking			XDH1X, HFQC6	CMGSP	0.00	0.00	0.00	0.00	0.00						
271 DS1 LOOP																
	4-WIRE DS1 DIGITAL LOOP - COMMINGLING															
	4-Wire DS1 Digital Loop - Zone 1		1	271CX	271UC	85.97	211.72	72.42	38.20	7.19						
	4-Wire DS1 Digital Loop - Zone 2		2	271CX	271UC	81.27	211.72	72.42	38.20	7.19						
	4-Wire DS1 Digital Loop - Zone 3		3	271CX	271UC	128.28	211.72	72.42	38.20	7.19						
	Central Office Interface Channel			271CX	271UK	9.50	27.30	2.90	16.85	1.04						
	Switch As Is conversion - single LSR			271CX	URESL		6.54	6.54								
	Switch As Is conversion - Spreadsheet			271CX	URESP		6.54	6.54								
	Extended Superframe			271CX	CCOEF		0.00									
	Superframe			271CX	CCOSF		0.00									
	Order Coordination Time Specific			271CX	OCOSL	25.00										
	Contact Name			271CX	UNECN		0.00									
LNP Query Service																
	LNP Charge Per query					0.0008227										
	LNP Service Establishment Manual						12.47		11.07							
	LNP Service Provisioning with Point Code Establishment						574.31	293.39	251.23	184.73						
911 PBX LOCATE																
	911 PBX LOCATE DATABASE CAPABILITY															
	Service Establishment per CLEC per End User Account			9PBDC	9PBEU		1,825.00									
	Changes to TN Range or Customer Profile			9PBDC	9PBTN		182.67									
	Per Telephone Number (Monthly)			9PBDC	9PBMM	0.07										
	Change Company (Service Provider) ID			9PBDC	9PBPC		536.23									
	PBX Locate Service Support per CLEC (Monthlt)			9PBDC	9PBMR	176.96										
	Service Order Charge			9PBDC	9PBSC		11.73									
	911 PBX LOCATE TRANSPORT COMPONENT															
	See Att 3															
GA 271																
	DS1 Interoffice Channel Facility Termination (271 standalone)			U1TD1	271UA	44.04	110.92	80.20	31.33	21.71						
	DS1 Interoffice Channel per mile (271 standalone)			U1TD1	1L5UB	0.1417										
	DS3 Interoffice Channel Facility Termination (271 standalone)			U1TD3	271NA	440.53	320.16	86.24	66.71	52.76						
	DS3 Interoffice Channel per mile (271 standalone)			U1TD3	1L5NB	3.11										
	DS3 Local Loop Facility Termination (271 standalone)			UE3	271NC	323.53	1,751.51	131.77	112.80	75.81						
	DS3 Local Loop per mile (271 standalone)			UE3	1L5NG	13.47										
	DS1 Interoffice Channel Facility Termination (271 part combination)			UNC1X	271UA	44.04	110.92	80.20	31.33	21.71						
	DS1 Interoffice Channel per mile (271 part in combination)			UNC1X	1L5UB	0.1417										
	DS3 Interoffice Channel Facility Termination (271 part in combination)			UNC3X	271NA	440.53	320.16	86.24	66.71	52.76						
	DS3 Interoffice Channel per mile (271 part in combination)			UNC3X	1L5NB	3.11										
	DS3/DS1 Channel System (271 part in combination)			UNC3X	271BS	157.48	0.00	0.00	0.00	0.00						
	DS3 Local Loop Facility Termination (271 part in combination)			UNC3X	271NC	323.53	1,751.51	131.77	112.80	75.81						
	DS3 Local Loop per mile (271 part in combination)			UNC3X	1L5NG	13.47										
	DS1 Local Loop in combination (271 part in combination)		1	UNC1X	271UC	85.97	209.25	70.37	37.87	6.86						
	DS1 Local Loop in combination (271 part in combination)		2	UNC1X	271UC	81.27	209.25	70.37	37.87	6.86						
	DS1 Local Loop in combination (271 part in combination)		3	UNC1X	271UC	128.28	209.25	70.37	37.87	6.86						
	DS1 COCI (271 part in combination)			UNC1X	271UK	9.50	27.30	2.90	16.85	1.04						

UNBUNDLED NETWORK ELEMENTS - Georgia																	Att: 2 Exh: A			
CATEGORY		RATE ELEMENTS	Interim	Zone	BCS	USOC	RATES($)					Svc Order Submitted Elec per LSR	Svc Order Submitted Manually per LSR	Incremental Charge - Manual Svc Order vs. Electronic-1st	Incremental Charge - Manual Svc Order vs. Electronic-Add'l	Incremental Charge - Manual Svc Order vs. Electronic-Disc 1st	Incremental Charge - Manual Svc Order vs. Electronic-Disc Add'l
							Rec	Nonrecurring		Nonrecurring Disconnect		OSS Rates($)					
								First	Add'l	First	Add'l	SOMEC	SOMAN	SOMAN	SOMAN	SOMAN	SOMAN
	Note: Rates displaying an "I" in Interim column are interim as a result of a Commission order.																

UNBUNDLED NETWORK ELEMENTS - Kentucky																	Att: 2 Exh: A
CATEGORY		RATE ELEMENTS	Interim	Zone	BCS	USOC	RATES($)					Svc Order Submitted Elec per LSR	Svc Order Submitted Manually per LSR	Incremental Charge - Manual Svc Order vs. Electronic-1st	Incremental Charge - Manual Svc Order vs. Electronic-Add'l	Incremental Charge - Manual Svc Order vs. Electronic-Disc 1st	Incremental Charge - Manual Svc Order vs. Electronic-Disc Add'l
							Rec	Nonrecurring		Nonrecurring Disconnect		OSS Rates($)					
								First	Add'l	First	Add'l	SOMEC	SOMAN	SOMAN	SOMAN	SOMAN	SOMAN
	The "Zone" shown in the sections for stand-alone loops or loops as part of a combination refers to Geographically Deaveraged UNE Zones. To view Geographically Deaveraged UNE Zone Designations by Central Office, refer to internet Website: http://www.interconnection.bellsouth.com/become_a_clec/html/interconnection.htm																
OPERATIONS SUPPORT SYSTEMS (OSS) - "REGIONAL RATES"																	
	NOTE: (1) CLEC should contact its contract negotiator if it prefers the "state specific" OSS charges as ordered by the State Commissions. The OSS charges currently contained in this rate exhibit are the AT&T "regional" service ordering charges. CLEC may elect either the state specific Commission ordered rates for the service ordering charges, or CLEC may elect the regional service ordering charge, however, CLEC can not obtain a mixture of the two regardless if CLEC has a interconnection contract established in each of the 9 states.																
	NOTE: (2) Any element that can be ordered electronically will be billed according to the SOMEC rate listed in this category. Please refer to AT&T's Local Ordering Handbook (LOH) to determine if a product can be ordered electronically. For those elements that cannot be ordered electronically at present per the LOH, the listed SOMEC rate in this category reflects the charge that would be billed to a CLEC once electronic ordering capabilities come on-line for that element. Otherwise, the manual ordering charge, SOMAN, will be applied to a CLECs bill when it submits an LSR to AT&T.																
		OSS - Electronic Service Order Charge, Per Local Service Request (LSR) - UNE Only				SOMEC		3.50	0.00	3.50	0.00						
		OSS - Manual Service Order Charge, Per Local Service Request (LSR) - UNE Only				SOMAN		7.86	0.00	0.99	0.00						
UNE SERVICE DATE ADVANCEMENT CHARGE																	
	NOTE: The Expedite charge will be maintained commensurate with BellSouth's FCC No.1 Tariff, Section 5 as applicable.																
		UNE Expedite Charge per Circuit or Line Assignable USOC, per Day			UAL, UEANL, UCL, UEF, UDF, UEQ, UDL, UENTW, UDN, UEA, UHL, ULC, USL, U1T12, U1T48, U1TD1, U1TD3, U1TDX, U1TO3, U1TS1, U1TVX, UC1BC, UC1BL, UC1CC, UC1CL, UC1DC, UC1DL, UC1EC, UC1EL, UC1FC, UC1FL, UC1GC, UC1GL, UC1HC, UC1HL, UDL12, UDL48, UDLO3, UDLSX, UE3, ULD12, ULD48, ULDD1, ULDD3, ULDDX, ULDO3, ULDS1, ULDVX, UNC1X, UNC3X, UNCDX, UNCNX, UNCSX, UNCVX, UNLD1, UNLD3, UXTD1, UXTD3, UXTS1, U1TUC, U1TUD, U1TUB, U1TUA,NTCVG, NTCUD, NTCD1	SDASP		200.00									
ORDER MODIFICATION CHARGE																	
		Order Modification Charge (OMC)						33.37	0.00	0.00	0.00						
		Order Modification Additional Dispatch Charge (OMCAD)						150.00	0.00	0.00	0.00						
UNBUNDLED EXCHANGE ACCESS LOOP																	
	2-WIRE ANALOG VOICE GRADE LOOP																
		2-Wire Analog Voice Grade Loop - Service Level 1- Zone 1		1	UEANL	UEAL2	10.56	46.66	22.57	26.65	7.65						
		2-Wire Analog Voice Grade Loop - Service Level 1- Zone 2		2	UEANL	UEAL2	15.34	46.66	22.57	26.65	7.65						
		2-Wire Analog Voice Grade Loop - Service Level 1- Zone 3		3	UEANL	UEAL2	31.11	46.66	22.57	26.65	7.65						
		2-Wire Analog Voice Grade Loop - Service Level 1- Zone 1		1	UEANL	UEASL	10.56	46.66	22.57	26.65	7.65						
		2-Wire Analog Voice Grade Loop - Service Level 1- Zone 2		2	UEANL	UEASL	15.34	46.66	22.57	26.65	7.65						
		2-Wire Analog Voice Grade Loop - Service Level 1- Zone 3		3	UEANL	UEASL	31.11	46.66	22.57	26.65	7.65						
		Tag Loop at End User Premise			UEANL	URETL		8.93	0.88								
		Loop Testing - Basic 1st Half Hour			UEANL	URET1		46.88	0.00								
		Loop Testing - Basic Additional Half Hour			UEANL	URETA		24.16	24.16								
		Manual Order Coordination for UVL-SL1s (per loop)			UEANL	UEAMC		9.00	9.00								
		Order Coordination for Specified Conversion Time for UVL-SL1 (per LSR)			UEANL	OCOSL		23.01	23.01								

UNBUNDLED NETWORK ELEMENTS - Kentucky

Att: 2 Exh: A

CATEGORY	RATE ELEMENTS	Interim	Zone	BCS	USOC	RATES($)					Svc Order Submitted Elec per LSR	Svc Order Submitted Manually per LSR	Incremental Charge - Manual Svc Order vs. Electronic-1st	Incremental Charge - Manual Svc Order vs. Electronic-Add'l	Incremental Charge - Manual Svc Order vs. Electronic-Disc 1st	Incremental Charge - Manual Svc Order vs. Electronic-Disc Add'l
						Rec	Nonrecurring		Nonrecurring Disconnect		OSS Rates($)					
							First	Add'l	First	Add'l	SOMEC	SOMAN	SOMAN	SOMAN	SOMAN	SOMAN
	Unbundled Non-Design Voice Loop, billing for AT&T providing make-up (Engineering Information - E.I.)			UEANL	UEANM		13.49	13.49								
	Unbundled Loop Service Rearrangement, change in loop facility, per circuit			UEANL	UREWO		15.78	8.94	26.65	7.65						
	Bulk Migration, per 2 Wire Voice Loop-SL1			UEANL	UREPN		46.66	22.57	26.65	7.65						
	Bulk Migration Order Coordination, per 2 Wire Voice Loop-SL1			UEANL	UREPM		9.00	9.00								
2-WIRE Unbundled COPPER LOOP																
	2-Wire Unbundled Copper Loop - Non-Designed Zone 1		1	UEQ	UEQ2X	10.58	44.97	20.89	25.64	6.65						
	2 Wire Unbundled Copper Loop - Non-Designed - Zone 2		2	UEQ	UEQ2X	11.51	44.97	20.89	25.64	6.65						
	2 Wire Unbundled Copper Loop - Non-Designed - Zone 3		3	UEQ	UEQ2X	13.19	44.97	20.89	25.64	6.65						
	Tag Loop at End User Premise			UEQ	URETL		8.93	0.88								
	Loop Testing - Basic 1st Half Hour			UEQ	URET1		46.88	0.00								
	Loop Testing - Basic Additional Half Hour			UEQ	URETA		24.16	24.16								
	Manual Order Coordination 2 Wire Unbundled Copper Loop - Non-Designed (per loop)			UEQ	USBMC		9.00	9.00								
	Unbundled Copper Loop - Non-Design, billing for AT&T providing make-up (Engineering Information - E.I.)			UEQ	UEQMU		13.49	13.49								
	Unbundled Loop Service Rearrangement, change in loop facility, per circuit			UEQ	UREWO		14.27	7.43	25.64	6.65						
	Bulk Migration, per 2 Wire UCL-ND			UEQ	UREPN		44.97	20.89	25.64	6.65						
	Bulk Migration Order Coordination, per 2 Wire UCL-ND			UEQ	UREPM		9.00	9.00								
UNBUNDLED EXCHANGE ACCESS LOOP																
2-WIRE ANALOG VOICE GRADE LOOP																
	2-Wire Analog Voice Grade Loop - Service Level 2 w/Loop or Ground Start Signaling - Zone 1		1	UEA	UEAL2	12.67	134.89	81.87	73.65	14.88						
	2-Wire Analog Voice Grade Loop - Service Level 2 w/Loop or Ground Start Signaling - Zone 2		2	UEA	UEAL2	17.45	134.89	81.87	73.65	14.88						
	2-Wire Analog Voice Grade Loop - Service Level 2 w/Loop or Ground Start Signaling - Zone 3		3	UEA	UEAL2	33.22	134.89	81.87	73.65	14.88						
	2-Wire Analog Voice Grade Loop - Service Level 2 w/Reverse Battery Signaling - Zone 1		1	UEA	UEAR2	12.67	134.89	81.87	73.65	14.88						
	2-Wire Analog Voice Grade Loop - Service Level 2 w/Reverse Battery Signaling - Zone 2		2	UEA	UEAR2	17.45	134.89	81.87	73.65	14.88						
	2-Wire Analog Voice Grade Loop - Service Level 2 w/Reverse Battery Signaling - Zone 3		3	UEA	UEAR2	33.22	134.89	81.87	73.65	14.88						
	Switch-As-Is Conversion rate per UNE Loop, Single LSR, (per DS0)			UEA	URESL		24.96	3.52								
	Switch-As-Is Conversion rate per UNE Loop, Spreadsheet, (per DS0)			UEA	URESP		26.44	5.01								
	Unbundled Loop Service Rearrangement, change in loop facility, per circuit			UEA	UREWO		87.72	36.36								
	Loop Tagging - Service Level 2 (SL2)			UEA	URETL		11.21	1.10								
	Bulk Migration, per 2 Wire Voice Loop-SL2			UEA	UREPN		134.89	81.87								
	Bulk Migration Order Coordination, per 2 Wire Voice Loop-SL2			UEA	UREPM		0.00	0.00								
4-WIRE ANALOG VOICE GRADE LOOP																
	4-Wire Analog Voice Grade Loop - Zone 1		1	UEA	UEAL4	29.26	164.11	112.36	78.91	18.66						
	4-Wire Analog Voice Grade Loop - Zone 2		2	UEA	UEAL4	34.25	164.11	112.36	78.91	18.66						
	4-Wire Analog Voice Grade Loop - Zone 3		3	UEA	UEAL4	85.06	164.11	112.36	78.91	18.66						
	Switch-As-Is Conversion rate per UNE Loop, Single LSR, (per DS0)			UEA	URESL		24.96	3.52								
	Switch-As-Is Conversion rate per UNE Loop, Spreadsheet, (per DS0)			UEA	URESP		26.44	5.01								
	Unbundled Loop Service Rearrangement, change in loop facility, per circuit			UEA	UREWO		87.72	36.36								
2-WIRE ISDN DIGITAL GRADE LOOP																
	2-Wire ISDN Digital Grade Loop - Zone 1		1	UDN	U1L2X	18.44	146.77	95.02	71.38	13.83						
	2-Wire ISDN Digital Grade Loop - Zone 2		2	UDN	U1L2X	25.08	146.77	95.02	71.38	13.83						
	2-Wire ISDN Digital Grade Loop - Zone 3		3	UDN	U1L2X	42.87	146.77	95.02	71.38	13.83						
	Unbundled Loop Service Rearrangement, change in loop facility, per circuit			UDN	UREWO		91.63	44.16								
2-WIRE ASYMMETRICAL DIGITAL SUBSCRIBER LINE (ADSL) COMPATIBLE LOOP																
	2 Wire Unbundled ADSL Loop including manual service inquiry & facility reservation - Zone 1		1	UAL	UAL2X	10.82	141.98	79.73	69.02	11.47						

CATEGORY	RATE ELEMENTS	Interim	Zone	BCS	USOC	RATES($)					Svc Order Submitted Elec per LSR	Svc Order Submitted Manually per LSR	Incremental Charge - Manual Svc Order vs. Electronic-1st	Incremental Charge - Manual Svc Order vs. Electronic-Add'l	Incremental Charge - Manual Svc Order vs. Electronic-Disc 1st	Incremental Charge - Manual Svc Order vs. Electronic-Disc Add'l
						Rec	Nonrecurring		Nonrecurring Disconnect		OSS Rates($)					
							First	Add'l	First	Add'l	SOMEC	SOMAN	SOMAN	SOMAN	SOMAN	SOMAN
	2 Wire Unbundled ADSL Loop including manual service inquiry & facility reservation - Zone 2		2	UAL	UAL2X	11.79	141.98	79.73	69.02	11.47						
	2 Wire Unbundled ADSL Loop including manual service inquiry & facility reservation - Zone 3		3	UAL	UAL2X	12.87	141.98	79.73	69.02	11.47						
	2 Wire Unbundled ADSL Loop without manual service inquiry & facility reservaton - Zone 1		1	UAL	UAL2W	10.82	121.18	69.00	69.09	11.54						
	2 Wire Unbundled ADSL Loop without manual service inquiry & facility reservaton - Zone 2		2	UAL	UAL2W	11.79	121.18	69.00	69.09	11.54						
	2 Wire Unbundled ADSL Loop without manual service inquiry & facility reservaton - Zone 3		3	UAL	UAL2W	12.87	121.18	69.00	69.09	11.54						
	Unbundled Loop Service Rearrangement, change in loop facility, per circuit			UAL	UREWO		86.20	40.40								
	2-WIRE HIGH BIT RATE DIGITAL SUBSCRIBER LINE (HDSL) COMPATIBLE LOOP															
	2 Wire Unbundled HDSL Loop including manual service inquiry & facility reservation - Zone 1		1	UHL	UHL2X	8.75	151.54	89.29	69.09	11.54						
	2 Wire Unbundled HDSL Loop including manual service inquiry & facility reservation - Zone 2		2	UHL	UHL2X	9.56	151.54	89.29	69.09	11.54						
	2 Wire Unbundled HDSL Loop including manual service inquiry & facility reservation - Zone 3		3	UHL	UHL2X	10.61	151.54	89.29	69.09	11.54						
	2 Wire Unbundled HDSL Loop without manual service inquiry and facility reservation - Zone 1		1	UHL	UHL2W	8.75	130.74	78.56	69.09	11.54						
	2 Wire Unbundled HDSL Loop without manual service inquiry and facility reservation - Zone 2		2	UHL	UHL2W	9.56	130.74	78.56	69.09	11.54						
	2 Wire Unbundled HDSL Loop without manual service inquiry and facility reservation - Zone 3		3	UHL	UHL2W	10.61	130.74	78.56	69.09	11.54						
	Unbundled Loop Service Rearrangement, change in loop facility, per circuit			UHL	UREWO		86.14	40.40								
	4-WIRE HIGH BIT RATE DIGITAL SUBSCRIBER LINE (HDSL) COMPATIBLE LOOP															
	4 Wire Unbundled HDSL Loop including manual service inquiry and facility reservation - Zone 1		1	UHL	UHL4X	13.95	185.75	123.50	74.95	14.69						
	4-Wire Unbundled HDSL Loop including manual service inquiry and facility reservation - Zone 2		2	UHL	UHL4X	15.68	185.75	123.50	74.95	14.69						
	4-Wire Unbundled HDSL Loop including manual service inquiry and facility reservation - Zone 3		3	UHL	UHL4X	16.98	185.75	123.50	74.95	14.69						
	4-Wire Unbundled HDSL Loop without manual service inquiry and facility reservation - Zone 1		1	UHL	UHL4W	13.95	164.95	114.04	77.32	15.80						
	4-Wire Unbundled HDSL Loop without manual service inquiry and facility reservation - Zone 2		2	UHL	UHL4W	15.68	164.95	114.04	77.32	15.80						
	4-Wire Unbundled HDSL Loop without manual service inquiry and facility reservation - Zone 3		3	UHL	UHL4W	16.98	164.95	114.04	77.32	15.80						
	Unbundled Loop Service Rearrangement, change in loop facility, per circuit			UHL	UREWO		86.14	40.40								
	4-WIRE DS1 DIGITAL LOOP															
	4-Wire DS1 Digital Loop - Zone 1		1	USL	USLXX	86.47	306.69	174.44	65.83	14.55						
	4-Wire DS1 Digital Loop - Zone 2		2	USL	USLXX	114.10	306.69	174.44	65.83	14.55						
	4-Wire DS1 Digital Loop - Zone 3		3	USL	USLXX	297.76	306.69	174.44	65.83	14.55						
	Switch-As-Is Conversion rate per UNE Loop, Single LSR, (per DS1)			USL	URESL		24.96	3.52								
	Switch-As-Is Conversion rate per UNE Loop, Spreadsheet, (per DS1)			USL	URESP		26.44	5.01								
	Unbundled Loop Service Rearrangement, change in loop facility, per circuit			USL	UREWO		101.09	43.04								
	4-WIRE 19.2, 56 OR 64 KBPS DIGITAL GRADE LOOP															
	4 Wire Unbundled Digital Loop 2.4 Kbps - Zone 1		1	UDL	UDL2X	27.59	157.81	106.06	78.91	18.66						
	4 Wire Unbundled Digital Loop 2.4 Kbps - Zone 2		2	UDL	UDL2X	32.48	157.81	106.06	78.91	18.66						
	4 Wire Unbundled Digital Loop 2.4 Kbps - Zone 3		3	UDL	UDL2X	36.37	157.81	106.06	78.91	18.66						
	4 Wire Unbundled Digital Loop 4.8 Kbps - Zone 1		1	UDL	UDL4X	27.59	157.81	106.06	78.91	18.66						
	4 Wire Unbundled Digital Loop 4.8 Kbps - Zone 2		2	UDL	UDL4X	32.48	157.81	106.06	78.91	18.66						
	4 Wire Unbundled Digital Loop 4.8 Kbps - Zone 3		3	UDL	UDL4X	36.37	157.81	106.06	78.91	18.66						
	4 Wire Unbundled Digital Loop 9.6 Kbps - Zone 1		1	UDL	UDL9X	27.59	157.81	106.06	78.91	18.66						
	4 Wire Unbundled Digital Loop 9.6 Kbps - Zone 2		2	UDL	UDL9X	32.48	157.81	106.06	78.91	18.66						
	4 Wire Unbundled Digital Loop 9.6 Kbps - Zone 3		3	UDL	UDL9X	36.37	157.81	106.06	78.91	18.66						
	4 Wire Unbundled Digital 19.2 Kbps - Zone 1		1	UDL	UDL19	27.59	157.81	106.06	78.91	18.66						
	4 Wire Unbundled Digital 19.2 Kbps - Zone 2		2	UDL	UDL19	32.48	157.81	106.06	78.91	18.66						

UNBUNDLED NETWORK ELEMENTS - Kentucky																	Att: 2 Exh: A
CATEGORY		RATE ELEMENTS	Interim	Zone	BCS	USOC	RATES($)					Svc Order Submitted Elec per LSR	Svc Order Submitted Manually per LSR	Incremental Charge - Manual Svc Order vs. Electronic-1st	Incremental Charge - Manual Svc Order vs. Electronic-Add'l	Incremental Charge - Manual Svc Order vs. Electronic-Disc 1st	Incremental Charge - Manual Svc Order vs. Electronic-Disc Add'l
							Rec	Nonrecurring		Nonrecurring Disconnect		OSS Rates($)					
								First	Add'l	First	Add'l	SOMEC	SOMAN	SOMAN	SOMAN	SOMAN	SOMAN
		4 Wire Unbundled Digital 19.2 Kbps - Zone 3		3	UDL	UDL19	36.37	157.81	106.06	78.91	18.66						
		4 Wire Unbundled Digital Loop 56 Kbps - Zone 1		1	UDL	UDL56	27.59	157.81	106.06	78.91	18.66						
		4 Wire Unbundled Digital Loop 56 Kbps - Zone 2		2	UDL	UDL56	32.48	157.81	106.06	78.91	18.66						
		4 Wire Unbundled Digital Loop 56 Kbps - Zone 3		3	UDL	UDL56	36.37	157.81	106.06	78.91	18.66						
		4 Wire Unbundled Digital Loop 64 Kbps - Zone 1		1	UDL	UDL64	27.59	157.81	106.06	78.91	18.66						
		4 Wire Unbundled Digital Loop 64 Kbps - Zone 2		2	UDL	UDL64	32.48	157.81	106.06	78.91	18.66						
		4 Wire Unbundled Digital Loop 64 Kbps - Zone 3		3	UDL	UDL64	36.37	157.81	106.06	78.91	18.66						
		Switch-As-Is Conversion rate per UNE Loop, Single LSR, (per DS0)			UDL	URESL		24.96	3.52								
		Switch-As-Is Conversion rate per UNE Loop, Spreadsheet, (per DS0)			UDL	URESP		26.44	5.01								
		Unbundled Loop Service Rearrangement, change in loop facility, per circuit			UDL	UREWO		102.13	49.75								
	2-WIRE Unbundled COPPER LOOP																
		2-Wire Unbundled Copper Loop-Designed including manual service inquiry & facility reservation - Zone 1		1	UCL	UCLPB	10.82	140.95	78.70	69.09	11.54						
		2-Wire Unbundled Copper Loop-Designed including manual service inquiry & facility reservation - Zone 2		2	UCL	UCLPB	11.79	140.95	78.70	69.09	11.54						
		2 Wire Unbundled Copper Loop-Designed including manual service inquiry & facility reservation - Zone 3		3	UCL	UCLPB	12.87	140.95	78.70	69.09	11.54						
		2-Wire Unbundled Copper Loop-Designed without manual service inquiry and facility reservation - Zone 1		1	UCL	UCLPW	10.82	120.15	67.97	69.09	11.54						
		2-Wire Unbundled Copper Loop-Designed without manual service inquiry and facility reservation - Zone 2		2	UCL	UCLPW	11.79	120.15	67.97	69.09	11.54						
		2-Wire Unbundled Copper Loop-Designed without manual service inquiry and facility reservation - Zone 3		3	UCL	UCLPW	12.87	120.15	67.97	69.09	11.54						
		Order Coordination for Unbundled Copper Loops (per loop)			UCL	UCLMC		9.00	9.00								
		CLEC to CLEC Conversion Charge without outside dispatch (UCL-Des)			UCL	UREWO		97.23	42.48								
	4-WIRE COPPER LOOP																
		4-Wire Copper Loop-Designed including manual service inquiry and facility reservation - Zone 1		1	UCL	UCL4S	16.92	170.31	108.06	74.95	14.69						
		4-Wire Copper Loop-Designed including manual service inquiry and facility reservation - Zone 2		2	UCL	UCL4S	17.36	170.31	108.06	74.95	14.69						
		4-Wire Copper Loop-Designed including manual service inquiry and facility reservation - Zone 3		3	UCL	UCL4S	28.10	170.31	108.06	74.95	14.69						
		4-Wire Copper Loop-Designed without manual service inquiry and facility reservation - Zone 1		1	UCL	UCL4W	16.92	149.52	97.33	74.95	14.69						
		4-Wire Copper Loop-Designed without manual service inquiry and facility reservation - Zone 2		2	UCL	UCL4W	17.36	149.52	97.33	74.95	14.69						
		4-Wire Copper Loop-Designed without manual service inquiry and facility reservation - Zone 3		3	UCL	UCL4W	28.10	149.52	97.33	74.95	14.69						
		Order Coordination for Unbundled Copper Loops (per loop)			UCL	UCLMC		9.00	9.00								
		Unbundled Loop Service Rearrangement, change in loop facility, per circuit			UCL	UREWO		97.23	42.48								
		Order Coordination for Specified Conversion Time (per LSR)			UEA, UDN, UAL, UHL, UDL, USL	OCOSL		23.01									
	Rearrangements																
		EEL to UNE-L Retermination, per 2 Wire Unbundled Voice Loop-SL2			UEA	UREEL		87.72	36.36								
		EEL to UNE-L Retermination, per 4 Wire Unbundled Voice Loop			UEA	UREEL		87.72	36.36								
		EEL to UNE-L Retermination, per 2 Wire ISDN Loop			UDN	UREEL		91.63	44.16								
		EEL to UNE-L Retermination, per 4 Wire Unbundled Digital Loop			UDL	UREEL		102.13	49.75								
		EEL to UNE-L Retermination, per 4 Wire Unbundled DS1 Loop			USL	UREEL		101.09	43.04								
UNE LOOP COMMINGLING																	
	2-WIRE ANALOG VOICE GRADE LOOP - COMMINGLING																
		2-Wire Analog Voice Grade Loop - Service Level 2 w/Loop or Ground Start Signaling - Zone 1		1	NTCVG	UEAL2	12.67	134.89	81.87	73.65	14.88						
		2-Wire Analog Voice Grade Loop - Service Level 2 w/Loop or Ground Start Signaling - Zone 2		2	NTCVG	UEAL2	17.45	134.89	81.87	73.65	14.88						
		2-Wire Analog Voice Grade Loop - Service Level 2 w/Loop or Ground Start Signaling - Zone 3		3	NTCVG	UEAL2	33.22	134.89	81.87	73.65	14.88						

CATEGORY	RATE ELEMENTS	Interim	Zone	BCS	USOC	RATES($)					Svc Order Submitted Elec per LSR	Svc Order Submitted Manually per LSR	Incremental Charge - Manual Svc Order vs. Electronic-1st	Incremental Charge - Manual Svc Order vs. Electronic-Add'l	Incremental Charge - Manual Svc Order vs. Electronic-Disc 1st	Incremental Charge - Manual Svc Order vs. Electronic-Disc Add'l
						Rec	Nonrecurring		Nonrecurring Disconnect		OSS Rates($)					
							First	Add'l	First	Add'l	SOMEC	SOMAN	SOMAN	SOMAN	SOMAN	SOMAN
	2-Wire Analog Voice Grade Loop - Service Level 2 w/Reverse Battery Signaling - Zone 1		1	NTCVG	UEAR2	12.67	134.89	81.87	73.65	14.88						
	2-Wire Analog Voice Grade Loop - Service Level 2 w/Reverse Battery Signaling - Zone 2		2	NTCVG	UEAR2	17.45	134.89	81.87	73.65	14.88						
	2-Wire Analog Voice Grade Loop - Service Level 2 w/Reverse Battery Signaling - Zone 3		3	NTCVG	UEAR2	33.22	134.89	81.87	73.65	14.88						
	Switch-As-Is Conversion rate per UNE Loop, Single LSR, (per DS0)			NTCVG	URESL		24.96	3.52								
	Switch-As-Is Conversion rate per UNE Loop, Spreadsheet, (per DS0)			NTCVG	URESP		26.44	5.01								
	Unbundled Loop Service Rearrangement, change in loop facility, per circuit			NTCVG	UREWO		87.72	36.36								
	Loop Tagging - Service Level 2 (SL2)			NTCVG	URETL		11.21	1.10								
4-WIRE ANALOG VOICE GRADE LOOP - COMMINGLING																
	4-Wire Analog Voice Grade Loop - Zone 1		1	NTCVG	UEAL4	29.26	164.11	112.36	78.91	18.66						
	4-Wire Analog Voice Grade Loop - Zone 2		2	NTCVG	UEAL4	34.25	164.11	112.36	78.91	18.66						
	4-Wire Analog Voice Grade Loop - Zone 3		3	NTCVG	UEAL4	85.06	164.11	112.36	78.91	18.66						
	Switch-As-Is Conversion rate per UNE Loop, Single LSR, (per DS0)			NTCVG	URESL		24.96	3.52								
	Switch-As-Is Conversion rate per UNE Loop, Spreadsheet, (per DS0)			NTCVG	URESP		26.44	5.01								
	Unbundled Loop Service Rearrangement, change in loop facility, per circuit			NTCVG	UREWO		87.72	36.36								
4-WIRE DS1 DIGITAL LOOP - COMMINGLING																
	4-Wire DS1 Digital Loop - Zone 1		1	NTCD1	USLXX	86.47	306.69	174.44	65.83	14.55						
	4-Wire DS1 Digital Loop - Zone 2		2	NTCD1	USLXX	114.10	306.69	174.44	65.83	14.55						
	4-Wire DS1 Digital Loop - Zone 3		3	NTCD1	USLXX	297.76	306.69	174.44	65.83	14.55						
	Switch-As-Is Conversion rate per UNE Loop, Single LSR, (per DS1)			NTCD1	URESL		24.96	3.52								
	Switch-As-Is Conversion rate per UNE Loop, Spreadsheet, (per DS1)			NTCD1	URESP		26.44	5.01								
	Unbundled Loop Service Rearrangement, change in loop facility, per circuit			NTCD1	UREWO		101.09	43.04								
4-WIRE 19.2, 56 OR 64 KBPS DIGITAL GRADE LOOP - COMMINGLING																
	4 Wire Unbundled Digital Loop 2.4 Kbps - Zone 1		1	NTCUD	UDL2X	27.59	157.81	106.06	78.91	18.66						
	4 Wire Unbundled Digital Loop 2.4 Kbps - Zone 2		2	NTCUD	UDL2X	32.48	157.81	106.06	78.91	18.66						
	4 Wire Unbundled Digital Loop 2.4 Kbps - Zone 3		3	NTCUD	UDL2X	36.37	157.81	106.06	78.91	18.66						
	4 Wire Unbundled Digital Loop 4.8 Kbps - Zone 1		1	NTCUD	UDL4X	27.59	157.81	106.06	78.91	18.66						
	4 Wire Unbundled Digital Loop 4.8 Kbps - Zone 2		2	NTCUD	UDL4X	32.48	157.81	106.06	78.91	18.66						
	4 Wire Unbundled Digital Loop 4.8 Kbps - Zone 3		3	NTCUD	UDL4X	36.37	157.81	106.06	78.91	18.66						
	4 Wire Unbundled Digital Loop 9.6 Kbps - Zone 1		1	NTCUD	UDL9X	27.59	157.81	106.06	78.91	18.66						
	4 Wire Unbundled Digital Loop 9.6 Kbps - Zone 2		2	NTCUD	UDL9X	32.48	157.81	106.06	78.91	18.66						
	4 Wire Unbundled Digital Loop 9.6 Kbps - Zone 3		3	NTCUD	UDL9X	36.37	157.81	106.06	78.91	18.66						
	4 Wire Unbundled Digital 19.2 Kbps - Zone 1		1	NTCUD	UDL19	27.59	157.81	106.06	78.91	18.66						
	4 Wire Unbundled Digital 19.2 Kbps - Zone 2		2	NTCUD	UDL19	32.48	157.81	106.06	78.91	18.66						
	4 Wire Unbundled Digital 19.2 Kbps - Zone 3		3	NTCUD	UDL19	36.37	157.81	106.06	78.91	18.66						
	4 Wire Unbundled Digital Loop 56 Kbps - Zone 1		1	NTCUD	UDL56	27.59	157.81	106.06	78.91	18.66						
	4 Wire Unbundled Digital Loop 56 Kbps - Zone 2		2	NTCUD	UDL56	32.48	157.81	106.06	78.91	18.66						
	4 Wire Unbundled Digital Loop 56 Kbps - Zone 3		3	NTCUD	UDL56	36.37	157.81	106.06	78.91	18.66						
	4 Wire Unbundled Digital Loop 64 Kbps - Zone 1		1	NTCUD	UDL64	27.59	157.81	106.06	78.91	18.66						
	4 Wire Unbundled Digital Loop 64 Kbps - Zone 2		2	NTCUD	UDL64	32.48	157.81	106.06	78.91	18.66						
	4 Wire Unbundled Digital Loop 64 Kbps - Zone 3		3	NTCUD	UDL64	36.37	157.81	106.06	78.91	18.66						
	Switch-As-Is Conversion rate per UNE Loop, Single LSR, (per DS0)			NTCUD	URESL		24.96	3.52								
	Switch-As-Is Conversion rate per UNE Loop, Spreadsheet, (per DS0)			NTCUD	URESP		26.44	5.01								
	Unbundled Loop Service Rearrangement, change in loop facility, per circuit			NTCUD	UREWO		102.13	49.75								
	Order Coordination for Specified Conversion Time (per LSR)			NTCVG, NTCUD, NTCD1	OCOSL		23.01									
MAINTENANCE OF SERVICE																

UNBUNDLED NETWORK ELEMENTS - Kentucky																	Att: 2 Exh: A
CATEGORY		RATE ELEMENTS	Interim	Zone	BCS	USOC	RATES($)					Svc Order Submitted Elec per LSR	Svc Order Submitted Manually per LSR	Incremental Charge - Manual Svc Order vs. Electronic-1st	Incremental Charge - Manual Svc Order vs. Electronic-Add'l	Incremental Charge - Manual Svc Order vs. Electronic-Disc 1st	Incremental Charge - Manual Svc Order vs. Electronic-Disc Add'l
							Rec	Nonrecurring		Nonrecurring Disconnect		OSS Rates($)					
								First	Add'l	First	Add'l	SOMEC	SOMAN	SOMAN	SOMAN	SOMAN	SOMAN
		Maintenance of Service Charge, Basic Time, per half hour			UDC, UEA, UDL, UDN, USL, UAL, UHL, UCL, NTCVG, NTCUD, NTCD1, U1TD1, U1TD3, U1TDX, U1TS1, U1TVX, UDF, UDFCX, UDLSX, UE3, ULDD1, ULDD3, ULDDX, ULDS1, ULDVX, UNC1X, UNC3X, UNCDX, UNCSX, UNCVX, ULS	MVVBT		80.00	55.00								
		Maintenance of Service Charge, Overtime, per half hour			UDC, UEA, UDL, UDN, USL, UAL, UHL, UCL, NTCVG, NTCUD, NTCD1, U1TD1, U1TD3, U1TDX, U1TS1, U1TVX, UDF, UDFCX, UDLSX, UE3, ULDD1, ULDD3, ULDDX, ULDS1, ULDVX, UNC1X, UNC3X, UNCDX, UNCSX, UNCVX, ULS	MVVOT		90.00	65.00								
		Maintenance of Service Charge, Premium, per half hour			UDC, UEA, UDL, UDN, USL, UAL, UHL, UCL, NTCVG, NTCUD, NTCD1, U1TD1, U1TD3, U1TDX, U1TS1, U1TVX, UDF, UDFCX, UDLSX, UE3, ULDD1, ULDD3, ULDDX, ULDS1, ULDVX, UNC1X, UNC3X, UNCDX, UNCSX, UNCVX, ULS	MVVPT		100.00	75.00								
LOOP MODIFICATION																	
		Unbundled Loop Modification, Removal of Load Coils - 2 Wire pair less than or equal to 18k ft, per Unbundled Loop			UAL, UHL, UCL, UEQ, ULS, UEA, UEANL, UEPSR, UEPSB	ULM2L		9.24	9.24								
		Unbundled Loop Modification Removal of Load Coils - 4 Wire less than or equal to 18K ft, per Unbundled Loop			UHL, UCL, UEA	ULM4L		9.24	9.24								
		Unbundled Loop Modification Removal of Bridged Tap Removal, per unbundled loop			UAL, UHL, UCL, UEQ, ULS, UEA, UEANL, UEPSR, UEPSB	ULMBT		10.47	10.47								
SUB-LOOPS																	
	Sub-Loop Distribution																
		Sub-Loop - Per Cross Box Location - CLEC Feeder Facility Set-Up			UEANL, UEF	USBSA		207.91	207.91								
		Sub-Loop - Per Cross Box Location - Per 25 Pair Panel Set-Up			UEANL, UEF	USBSB		12.50	12.50								
		Sub-Loop - Per Building Equipment Room - CLEC Feeder Facility Set-Up			UEANL	USBSC		80.87	80.87								
		Sub-Loop - Per Building Equipment Room - Per 25 Pair Panel Set-Up			UEANL	USBSD		45.04	45.04								

UNBUNDLED NETWORK ELEMENTS - Kentucky																	Att: 2 Exh: A
CATEGORY		RATE ELEMENTS	Interim	Zone	BCS	USOC	RATES($)					Svc Order Submitted Elec per LSR	Svc Order Submitted Manually per LSR	Incremental Charge - Manual Svc Order vs. Electronic-1st	Incremental Charge - Manual Svc Order vs. Electronic-Add'l	Incremental Charge - Manual Svc Order vs. Electronic-Disc 1st	Incremental Charge - Manual Svc Order vs. Electronic-Disc Add'l
							Rec	Nonrecurring		Nonrecurring Disconnect		OSS Rates($)					
								First	Add'l	First	Add'l	SOMEC	SOMAN	SOMAN	SOMAN	SOMAN	SOMAN
		Sub-Loop Distribution Per 2-Wire Analog Voice Grade Loop - Zone 1		1	UEANL	USBN2	6.34	85.03	39.05	59.81	7.90						
		Sub-Loop Distribution Per 2-Wire Analog Voice Grade Loop - Zone 2		2	UEANL	USBN2	9.06	85.03	39.05	59.81	7.90						
		Sub-Loop Distribution Per 2-Wire Analog Voice Grade Loop - Zone 3		3	UEANL	USBN2	14.82	85.03	39.05	59.81	7.90						
		Order Coordination for Unbundled Sub-Loops, per sub-loop pair			UEANL	USBMC		9.00	9.00								
		Sub-Loop Distribution Per 4-Wire Analog Voice Grade Loop - Zone 1		1	UEANL	USBN4	8.14	102.31	56.32	65.24	10.88						
		Sub-Loop Distribution Per 4-Wire Analog Voice Grade Loop - Zone 2		2	UEANL	USBN4	8.63	102.31	56.32	65.24	10.88						
		Sub-Loop Distribution Per 4-Wire Analog Voice Grade Loop - Zone 3		3	UEANL	USBN4	25.60	102.31	56.32	65.24	10.88						
		Order Coordination for Unbundled Sub-Loops, per sub-loop pair			UEANL	USBMC		9.00	9.00								
		Sub-Loop 2-Wire Intrabuilding Network Cable (INC)			UEANL	USBR2	2.57	68.35	22.36	59.81	7.90						
		Order Coordination for Unbundled Sub-Loops, per sub-loop pair			UEANL	USBMC		9.00	9.00								
		Sub-Loop 4-Wire Intrabuilding Network Cable (INC)			UEANL	USBR4	4.98	76.49	30.51	65.24	10.88						
		Order Coordination for Unbundled Sub-Loops, per sub-loop pair			UEANL	USBMC		9.00	9.00								
		Loop Testing - Basic 1st Half Hour			UEANL	URET1		46.88	0.00								
		Loop Testing - Basic Additional Half Hour			UEANL	URETA		24.16	24.16								
		2 Wire Copper Unbundled Sub-Loop Distribution - Zone 1		1	UEF	UCS2X	5.45	85.03	39.05	59.81	7.90						
		2 Wire Copper Unbundled Sub-Loop Distribution - Zone 2		2	UEF	UCS2X	7.06	85.03	39.05	59.81	7.90						
		2 Wire Copper Unbundled Sub-Loop Distribution - Zone 3		3	UEF	UCS2X	9.67	85.03	39.05	59.81	7.90						
		Order Coordination for Unbundled Sub-Loops, per sub-loop pair			UEF	USBMC		9.00	9.00								
		4 Wire Copper Unbundled Sub-Loop Distribution - Zone 1		1	UEF	UCS4X	7.09	102.31	56.32	65.24	10.88						
		4 Wire Copper Unbundled Sub-Loop Distribution - Zone 2		2	UEF	UCS4X	8.66	102.31	56.32	65.24	10.88						
		4 Wire Copper Unbundled Sub-Loop Distribution - Zone 3		3	UEF	UCS4X	19.40	102.31	56.32	65.24	10.88						
		Order Coordination for Unbundled Sub-Loops, per sub-loop pair			UEF	USBMC		9.00	9.00								
		Loop Tagging Service Level 1, Unbundled Copper Loop, Non-Designed and Distribution Subloops			UEF, UEANL	URETL		8.93	0.88								
		Loop Testing - Basic 1st Half Hour			UEF	URET1		46.88	0.00								
		Loop Testing - Basic Additional Half Hour			UEF	URETA		24.16	24.16								
	Unbundled Sub-Loop Modification																
		Unbundled Sub-Loop Modification - 2-W Copper Dist Load Coil/Equip Removal per 2-W PR			UEF	ULM2X		5.23	5.23								
		Unbundled Sub-loop Modification - 4-W Copper Dist Load Coil/Equip Removal per 4-W PR			UEF	ULM4X		5.23	5.23								
		Unbundled Loop Modification, Removal of Bridge Tap, per unbundled loop			UEF	ULMBT		7.97	7.97								
	Unbundled Network Terminating Wire (UNTW)																
		Unbundled Network Terminating Wire (UNTW) per Pair			UENTW	UENPP	0.53	23.51	23.51								
	Network Interface Device (NID)																
		Network Interface Device (NID) - 1-2 lines			UENTW	UND12		73.53	49.47								
		Network Interface Device (NID) - 1-6 lines			UENTW	UND16		115.96	91.91								
		Network Interface Device Cross Connect - 2 W			UENTW	UNDC2		8.56	8.56								
		Network Interface Device Cross Connect - 4W			UENTW	UNDC4		8.56	8.56								
UNE OTHER, PROVISIONING ONLY - NO RATE																	
		Unbundled Contact Name, Provisioning Only - no rate			UAL, UCL, UDC, UDL, UDN, UEA, UHL, UEANL, UEF, UEQ, UENTW, NTCVG, NTCUD, NTCD1, USL	UNECN	0.00	0.00									
		Unbundled DS1 Loop - Superframe Format Option - no rate			USL, NTCD1	CCOSF		0.00									
		Unbundled DS1 Loop - Expanded Superframe Format option - no rate			USL, NTCD1	CCOEF		0.00									
		NID - Dispatch and Service Order for NID installation			UENTW	UNDBX	0.00	0.00									
		UNTW Circuit Establishment, Provisioning Only - No Rate			UENTW	UENCE	0.00	0.00									

UNBUNDLED NETWORK ELEMENTS - Kentucky																	Att: 2 Exh: A
CATEGORY		RATE ELEMENTS	Interim	Zone	BCS	USOC	RATES($)					Svc Order Submitted Elec per LSR	Svc Order Submitted Manually per LSR	Incremental Charge - Manual Svc Order vs. Electronic-1st	Incremental Charge - Manual Svc Order vs. Electronic-Add'l	Incremental Charge - Manual Svc Order vs. Electronic-Disc 1st	Incremental Charge - Manual Svc Order vs. Electronic-Disc Add'l
							Rec	Nonrecurring		Nonrecurring Disconnect		OSS Rates($)					
								First	Add'l	First	Add'l	SOMEC	SOMAN	SOMAN	SOMAN	SOMAN	SOMAN
LOOP MAKE-UP																	
		Loop Makeup - Preordering Without Reservation, per working or spare facility queried (Manual).			UMK	UMKLW		23.40	23.40								
		Loop Makeup - Preordering With Reservation, per spare facility queried (Manual).			UMK	UMKLP		24.85	24.85								
		Loop Makeup--With or Without Reservation, per working or spare facility queried (Mechanized)			UMK	UMKMQ		0.67	0.67								
LINE SPLITTING																	
	END USER ORDERING-CENTRAL OFFICE BASED																
		Line Splitting - per line activation DLEC owned splitter			UEPSR UEPSB	UREOS	0.61										
		Line Splitting - per line activation AT&T owned - physical			UEPSR UEPSB	UREBP	0.61	37.02	21.20	21.10	9.87						
		Line Splitting - per line activation AT&T owned - virtual			UEPSR UEPSB	UREBV	0.61	37.02	21.20	21.10	9.87						
	END USER ORDERING - REMOTE SITE LINE SPLITTING																
		Remote Site Shared Loop Line Activation for End Users - CLEC Owned Splitter			UEPSR UEPSB	URERS	0.61	56.73	22.96	7.20	7.20						
		Remote Site Shared Loop - Subsequent Activity - CLEC Owned Splitter			UEPSR UEPSB	URERA		53.73	21.31								
	UNBUNDLED EXCHANGE ACCESS LOOP																
	2-WIRE ANALOG VOICE GRADE LOOP																
		2 Wire Analog Voice Grade Loop-Service Level 1-Line Splitting-Zone 1		1	UEPSR UEPSB	UEALS	10.56	46.66	22.57	26.65	7.65						
		2 Wire Analog Voice Grade Loop-Service Level 1-Line Splitting-Zone 1		1	UEPSR UEPSB	UEABS	10.56	46.66	22.57	26.65	7.65						
		2 Wire Analog Voice Grade Loop- Service Level 1-Line Splitting-Zone 2		2	UEPSR UEPSB	UEALS	15.34	46.66	22.57	26.65	7.65						
		2 Wire Analog Voice Grade Loop- Service Level 1-Line Splitting-Zone 2		2	UEPSR UEPSB	UEABS	15.34	46.66	22.57	26.65	7.65						
		2 Wire Analog Voice Grade Loop-Service Level 1-Line Splitting-Zone 3		3	UEPSR UEPSB	UEALS	31.11	46.66	22.57	26.65	7.65						
		2 Wire Analog Voice Grade Loop-Service Level 1-Line Splitting-Zone 3		3	UEPSR UEPSB	UEABS	31.11	46.66	22.57	26.65	7.65						
		Remote Site 2 Wire Analog Voice Grade Loop -Service Level 1-Line Splitting - CLEC Owned Splitter - Zone 1		1	UEPSR UEPSB	UEARS	6.34	85.03	39.05	59.81	7.90						
		Remote Site 2 Wire Analog Voice Grade Loop -Service Level 1-Line Splitting - CLEC Owned Splitter - Zone 2		2	UEPSR UEPSB	UEARS	9.06	85.03	39.05	59.81	7.90						
		Remote Site 2 Wire Analog Voice Grade Loop -Service Level 1-Line Splitting - CLEC Owned Splitter - Zone 3		3	UEPSR UEPSB	UEARS	14.82	85.03	39.05	59.81	7.90						
	PHYSICAL COLLOCATION																
		Physical Collocation-2 Wire Cross Connects (Loop) for Line Splitting			UEPSR UEPSB	PE1LS	0.0333	24.68	23.68	12.14	10.95						
	VIRTUAL COLLOCATION																
		Virtual Collocation-2 Wire Cross Connects (Loop) for Line Splitting			UEPSR UEPSB	VE1LS	0.0309	24.68	23.68	12.14	10.95						
UNBUNDLED DEDICATED TRANSPORT																	
	INTEROFFICE CHANNEL - DEDICATED TRANSPORT																
		Interoffice Channel - 2-Wire Voice Grade - per mile			U1TVX	1L5XX	0.01										
		Interoffice Channel - 2-Wire Voice Grade - Facility Termination			U1TVX	U1TV2	29.11	47.34	31.78	22.77	8.75						
		Interoffice Channel - 2-Wire Voice Grade Rev Bat. - per mile			U1TVX	1L5XX	0.01										
		Interoffice Channel - 2-Wire VG Rev Bat. - Facility Termination			U1TVX	U1TR2	29.11	47.34	31.78	22.77	8.75						
		Interoffice Channel - 4-Wire Voice Grade - per mile			U1TVX	1L5XX	0.01										
		Interoffice Channel - 4- Wire Voice Grade - Facility Termination			U1TVX	U1TV4	25.86	47.34	31.78	22.77	8.75						
		Interoffice Channel - 56 kbps - per mile			U1TDX	1L5XX	0.0115										
		Interoffice Channel - 56 kbps - Facility Termination			U1TDX	U1TD5	20.97	47.34	31.78	22.77	8.75						
		Interoffice Channel - 64 kbps - per mile			U1TDX	1L5XX	0.0115										
		Interoffice Channel - 64 kbps - Facility Termination			U1TDX	U1TD6	20.97	47.34	31.78	22.77	8.75						
		Interoffice Channel - DS1 - per mile			U1TD1	1L5XX	0.23										
		Interoffice Channel - DS1 - Facility Termination			U1TD1	U1TF1	96.04	105.52	98.46	23.09	20.49						
		Interoffice Channel - DS3 - per mile			U1TD3	1L5XX	4.97										
		Interoffice Channel - DS3 - Facility Termination			U1TD3	U1TF3	1,175.15	335.40	219.24	89.57	87.75						
		Interoffice Channel - STS-1 - per mile			U1TS1	1L5XX	4.97										
		Interoffice Channel - STS-1 - Facility Termination			U1TS1	U1TFS	1,149.51	335.40	219.24	89.57	87.75						
	UNBUNDLED DARK FIBER																

UNBUNDLED NETWORK ELEMENTS - Kentucky																	Att: 2 Exh: A
CATEGORY		RATE ELEMENTS	Interim	Zone	BCS	USOC	RATES($)					Svc Order Submitted Elec per LSR	Svc Order Submitted Manually per LSR	Incremental Charge - Manual Svc Order vs. Electronic-1st	Incremental Charge - Manual Svc Order vs. Electronic-Add'l	Incremental Charge - Manual Svc Order vs. Electronic-Disc 1st	Incremental Charge - Manual Svc Order vs. Electronic-Disc Add'l
							Rec	Nonrecurring		Nonrecurring Disconnect		OSS Rates($)					
								First	Add'l	First	Add'l	SOMEC	SOMAN	SOMAN	SOMAN	SOMAN	SOMAN
		Dark Fiber - Interoffice Transport, Per Four Fiber Strands, Per Route Mile Or Fraction Thereof			UDF, UDFCX	1L5DF	30.74										
		Dark Fiber - Interoffice Transport, Per Four Fiber Strands, Per Route Mile Or Fraction Thereof			UDF, UDFCX	UDF14		732.53	192.67	377.27	241.67						
HIGH CAPACITY UNBUNDLED LOCAL LOOP																	
	DS-3/STS-1 UNBUNDLED LOCAL LOOP - Stand Alone																
		DS3 Unbundled Local Loop - per mile			UE3	1L5ND	9.25										
		DS3 Unbundled Local Loop - Facility Termination			UE3	UE3PX	308.31	551.38	338.08	173.00	120.42						
		STS-1Unbundled Local Loop - per mile			UDLSX	1L5ND	9.25										
		STS-1 Unbundled Local Loop - Facility Termination			UDLSX	UDLS1	320.51	551.38	338.08	173.00	120.42						
ENHANCED EXTENDED LINK (EELs)																	
	Network Elements Used in Combinations																
		2-Wire VG Loop (SL2) in Combination - Zone 1		1	UNCVX	UEAL2	12.67	125.22	60.48	59.69	7.84						
		2-Wire VG Loop (SL2) in Combination - Zone 2		2	UNCVX	UEAL2	17.45	125.22	60.48	59.69	7.84						
		2-Wire VG Loop (SL2) in Combination - Zone 3		3	UNCVX	UEAL2	33.22	125.22	60.48	59.69	7.84						
		4-Wire Analog Voice Grade Loop in Combination - Zone 1		1	UNCVX	UEAL4	29.26	125.22	60.48	59.69	7.84						
		4-Wire Analog Voice Grade Loop in Combination - Zone 2		2	UNCVX	UEAL4	34.25	125.22	60.48	59.69	7.84						
		4-Wire Analog Voice Grade Loop in Combination - Zone 3		3	UNCVX	UEAL4	85.06	125.22	60.48	59.69	7.84						
		2-Wire ISDN Loop in Combination - Zone 1		1	UNCNX	U1L2X	18.44	125.22	60.48	59.69	7.84						
		2-Wire ISDN Loop in Combination - Zone 2		2	UNCNX	U1L2X	25.08	125.22	60.48	59.69	7.84						
		2-Wire ISDN Loop in Combination - Zone 3		3	UNCNX	U1L2X	42.87	125.22	60.48	59.69	7.84						
		4-Wire 56Kbps Digital Grade Loop in Combination - Zone 1		1	UNCDX	UDL56	27.59	125.22	60.48	59.69	7.84						
		4-Wire 56Kbps Digital Grade Loop in Combination - Zone 2		2	UNCDX	UDL56	32.48	125.22	60.48	59.69	7.84						
		4-Wire 56Kbps Digital Grade Loop in Combination - Zone 3		3	UNCDX	UDL56	36.37	125.22	60.48	59.69	7.84						
		4-Wire 64Kbps Digital Grade Loop in Combination - Zone 1		1	UNCDX	UDL64	27.59	125.22	60.48	59.69	7.84						
		4-Wire 64Kbps Digital Grade Loop in Combination - Zone 2		2	UNCDX	UDL64	32.48	125.22	60.48	59.69	7.84						
		4-Wire 64Kbps Digital Grade Loop in Combination - Zone 3		3	UNCDX	UDL64	36.37	125.22	60.48	59.69	7.84						
		4-Wire DS1 Digital Loop in Combination - Zone 1		1	UNC1X	USLXX	86.47	210.70	114.60	63.96	17.97						
		4-Wire DS1 Digital Loop in Combination - Zone 2		2	UNC1X	USLXX	114.10	210.70	114.60	63.96	17.97						
		4-Wire DS1 Digital Loop in Combination - Zone 3		3	UNC1X	USLXX	297.76	210.70	114.60	63.96	17.97						
		DS3 Local Loop in combination - per mile			UNC3X	1L5ND	9.25										
		DS3 Local Loop in combination - Facility Termination			UNC3X	UE3PX	308.31	237.36	147.69	83.43	32.67						
		STS-1 Local Loop in combination - per mile			UNCSX	1L5ND	9.25										
		STS-1 Local Loop in combination - Facility Termination			UNCSX	UDLS1	320.51	237.36	147.69	83.43	32.67						
		Interoffice Channel in combination - 2-wire VG - per mile			UNCVX	1L5XX	0.01										
		Interoffice Channel in combination - 2-wire VG - Facility Termination			UNCVX	U1TV2	23.95	98.09	53.67	56.31	22.42						
		Interoffice Channel in combination - 4-wire VG - per mile			UNCVX	1L5XX	0.01										
		Interoffice Channel in combination - 4-wire VG - Facility Termination			UNCVX	U1TV4	21.28	98.09	53.67	56.31	22.42						
		Interoffice Channel in combination - 4-wire 56 kbps - per mile			UNCDX	1L5XX	0.01										
		Interoffice Channel in combination - 4-wire 56 kbps - Facility Termination			UNCDX	U1TD5	17.25	98.09	53.67	56.31	22.42						
		Interoffice Channel in combination - 4-wire 64 kbps - per mile			UNCDX	1L5XX	0.01										
		Interoffice Channel in combination - 4-wire 64 kbps - Facility Termination			UNCDX	U1TD6	17.25	98.09	53.67	56.31	22.42						
		Interoffice Channel in combination - DS1 - per mile			UNC1X	1L5XX	0.19										
		Interoffice Channel in combination - DS1 Facility Termination			UNC1X	U1TF1	79.02	181.24	123.53	56.72	22.32						
		Interoffice Channel in combination - DS3 - per mile			UNC3X	1L5XX	4.09										
		Interoffice Channel in combination - DS3 - Facility Termination			UNC3X	U1TF3	966.89	350.56	141.58	48.00	23.39						
		Interoffice Channel in combination - STS-1 - per mile			UNCSX	1L5XX	4.09										
		Interoffice Channel in combination - STS-1 Facility Termination			UNCSX	U1TFS	945.79	350.56	141.58	48.00	23.39						
ADDITIONAL NETWORK ELEMENTS																	
	Optional Features & Functions:																
		Clear Channel Capability Extended Frame Option - per DS1	I		U1TD1, ULDD1,UNC1X	CCOEF		0.00	0.00	0.00	0.00						
		Clear Channel Capability Super FrameOption - per DS1	I		U1TD1, ULDD1,UNC1X	CCOSF		0.00	0.00	0.00	0.00						
		Clear Channel Capability (SF/ESF) Option - Subsequent Activity - per DS1	I		ULDD1, U1TD1, UNC1X, USL	NRCCC		184.91	23.82	1.99	0.78						
		C-bit Parity Option - Subsequent Activity - per DS3	i		U1TD3, ULDD3, UE3, UNC3X	NRCC3		205.70	7.20	0.6924	0.00						
		DS1/DS0 Channel System			UNC1X	MQ1	113.33	57.26	14.74	1.86	1.67						
		DS3/DS1Channel System			UNC3X, UNCSX	MQ3	158.20	115.48	56.53	15.12	5.30						

UNBUNDLED NETWORK ELEMENTS - Kentucky

Att: 2 Exh: A

CATEGORY	RATE ELEMENTS	Interim	Zone	BCS	USOC	RATES($)					Svc Order Submitted Elec per LSR	Svc Order Submitted Manually per LSR	Incremental Charge - Manual Svc Order vs. Electronic-1st	Incremental Charge - Manual Svc Order vs. Electronic-Add'l	Incremental Charge - Manual Svc Order vs. Electronic-Disc 1st	Incremental Charge - Manual Svc Order vs. Electronic-Disc Add'l
						Rec	Nonrecurring		Nonrecurring Disconnect		OSS Rates($)					
							First	Add'l	First	Add'l	SOMEC	SOMAN	SOMAN	SOMAN	SOMAN	SOMAN
	Voice Grade COCI in combination			UNCVX	1D1VG	0.6228	6.71	4.84								
	Voice Grade COCI - for 2W-SL2 & 4W Voice Grade Local Loop			UEA	1D1VG	0.6228	6.71	4.84								
	Voice Grade COCI - for connection to a channelized DS1 Local Channel in the same SWC as collocation			U1TUC	1D1VG	0.6228	6.71	4.84								
	OCU-DP COCI (2.4-64kbs) in combination			UNCDX	1D1DD	1.32	6.71	4.84								
	OCU-DP COCI (2.4-64kbs) - for Unbundled Digital Loop			UDL	1D1DD	1.32	6.71	4.84								
	OCU-DP COCI (2.4-64kbs) - for connection to a channelized DS1 Local Channel in the same SWC as collocation			U1TUD	1D1DD	1.32	6.71	4.84								
	2-wire ISDN COCI (BRITE) in combination			UNCNX	UC1CA	2.84	6.71	4.84								
	2-wire ISDN COCI (BRITE) - for a Local Loop			UDN	UC1CA	2.84	6.71	4.84								
	2-wire ISDN COCI (BRITE) - for connection to a channelized DS1 Local Channel in the same SWC as collocation			U1TUB	UC1CA	2.84	6.71	4.84								
	DS1 COCI in combination			UNC1X	UC1D1	11.80	6.71	4.84								
	DS1 COCI - for Stand Alone Local Channel			ULDD1	UC1D1	11.80	6.71	4.84								
	DS1 COCI - for Stand Alone Interoffice Channel			U1TD1	UC1D1	11.80	6.71	4.84								
	DS1 COCI - for DS1 Local Loop			USL, NTCD1	UC1D1	11.80	6.71	4.84								
	DS1 COCI - for connection to a channelized DS1 Local Channel in the same SWC as collocation			U1TUA	UC1D1	11.80	6.71	4.84								
	Wholesale - UNE, Switch-As-Is Conversion Charge			UNCVX, UNCDX, UNC1X, UNC3X, UNCSX, UDFCX, XDH1X, HFQC6, XDD2X, XDV6X, XDDFX, XDD4X, HFRST, UNCNX	UNCCC		8.98	8.98								
	Unbundled Misc Rate Element, SNE SAI, Single Network Element - Switch As Is Non-recurring Charge, per circuit (LSR)	i		U1TVX, U1TDX, U1TD1, U1TD3, U1TS1, UDF, UE3	URESL		36.80	16.10								
	Unbundled Misc Rate Element, SNE SAI, Single Network Element - Switch As Is Non-recurring Charge, incremental charge per circuit on a spreadsheet	i		U1TVX, U1TDX, U1TD1, U1TD3, U1TS1, UDF, UE3	URESP		1.49	1.49								
	Access to DCS - Customer Reconfiguration (FlexServ)															
	Customer Reconfiguration Establishment						1.63		2.03							
	DS1 DCS Termination with DS0 Switching					25.69	32.88	23.58	21.09	15.88						
	DS1 DCS Termination with DS1 Switching					12.41	25.07	15.76	16.23	11.02						
	DS3 DCS Termination with DS1 Switching					154.20	32.88	23.58	21.09	15.88						
	Node (SynchroNet)															
	Node per month			UNCDX	UNCNT											
	Service Rearrangements															
	NRC - Change in Facility Assignment per circuit Service Rearrangement	I		U1TVX, U1TDX, U1TUC, U1TUD, U1TUB, ULDVX, ULDDX, UNCVX, UNCDX, UNC1X	URETD		101.09	43.04								
	NRC - Change in Facility Assignment per circuit Project Management (added to CFA per circuit if project managed)	I		U1TVX, U1TDX, U1TUC, U1TUD, U1TUB, ULDVX, ULDDX, UNCVX, UNCDX, UNC1X	URETB		3.67	3.67								
	NRC - Order Coordination Specific Time - Dedicated Transport	I		UNC1X, UNC3X	OCOSR		18.87	18.87								
COMMINGLING																
	Commingling Authorization			UNCVX, UNCDX, UNC1X, UNC3X, UNCSX, U1TD1, U1TD3, U1TS1, UE3, UDLSX, U1TVX, U1TDX, U1TUB, ULDVX, ULDD1, ULDD3, ULDS1	CMGAU	0.00	0.00	0.00	0.00	0.00						
	Commingled (UNE part of single bandwidth circuit)															
	Commingled VG COCI			XDV2X	1D1VG	0.6228	6.71	4.84								
	Commingled Digital COCI			XDV6X	1D1DD	1.32	6.71	4.84								

UNBUNDLED NETWORK ELEMENTS - Kentucky																	Att: 2 Exh: A
CATEGORY		RATE ELEMENTS	Interim	Zone	BCS	USOC	RATES($)					Svc Order Submitted Elec per LSR	Svc Order Submitted Manually per LSR	Incremental Charge - Manual Svc Order vs. Electronic-1st	Incremental Charge - Manual Svc Order vs. Electronic-Add'l	Incremental Charge - Manual Svc Order vs. Electronic-Disc 1st	Incremental Charge - Manual Svc Order vs. Electronic-Disc Add'l
							Rec	Nonrecurring		Nonrecurring Disconnect		OSS Rates($)					
								First	Add'l	First	Add'l	SOMEC	SOMAN	SOMAN	SOMAN	SOMAN	SOMAN
		Commingled ISDN COCI			XDD4X	UC1CA	2.84	6.71	4.84								
		Commingled 2-wire VG Interoffice Channel			XDV2X	U1TV2	23.95	98.09	53.67	56.31	22.42						
		Commingled 4-wire VG Interoffice Channel			XDV6X	U1TV4	21.28	98.09	53.67	56.31	22.42						
		Commingled 56kbps Interoffice Channel			XDD4X	U1TD5	20.97	98.09	53.67	56.31	22.42						
		Commingled 64kbps Interoffice Channel			XDD4X	U1TD6	17.25	98.09	53.67	56.31	22.42						
		Commingled VG/DS0 Interoffice Channel Mileage			XDV2X, XDV6X, XDD4X	1L5XX	0.01										
		Commingled 2-wire Local Loop Zone 1		1	XDV2X	UEAL2	12.67	125.22	60.48	59.69	7.84						
		Commingled 2-wire Local Loop Zone 2		2	XDV2X	UEAL2	17.45	125.22	60.48	59.69	7.84						
		Commingled 2-wire Local Loop Zone 3		3	XDV2X	UEAL2	33.22	125.22	60.48	59.69	7.84						
		Commingled 4-wire Local Loop Zone 1		1	XDV6X	UEAL4	29.26	125.22	60.48	59.69	7.84						
		Commingled 4-wire Local Loop Zone 2		2	XDV6X	UEAL4	34.25	125.22	60.48	59.69	7.84						
		Commingled 4-wire Local Loop Zone 3		3	XDV6X	UEAL4	85.06	125.22	60.48	59.69	7.84						
		Commingled 56kbps Local Loop Zone 1		1	XDD4X	UDL56	27.59	125.22	60.48	59.69	7.84						
		Commingled 56kbps Local Loop Zone 2		2	XDD4X	UDL56	32.48	125.22	60.48	59.69	7.84						
		Commingled 56kbps Local Loop Zone 3		3	XDD4X	UDL56	36.37	125.22	60.48	59.69	7.84						
		Commingled 64kbps Local Loop Zone 1		1	XDD4X	UDL64	27.59	125.22	60.48	59.69	7.84						
		Commingled 64kbps Local Loop Zone 2		2	XDD4X	UDL64	32.48	125.22	60.48	59.69	7.84						
		Commingled 64kbps Local Loop Zone 3		3	XDD4X	UDL64	36.37	125.22	60.48	59.69	7.84						
		Commingled ISDN Local Loop Zone 1		1	XDD4X	U1L2X	18.44	125.22	60.48	59.69	7.84						
		Commingled ISDN Local Loop Zone 2		2	XDD4X	U1L2X	25.08	125.22	60.48	59.69	7.84						
		Commingled ISDN Local Loop Zone 3		3	XDD4X	U1L2X	42.87	125.22	60.48	59.69	7.84						
		Commingled DS1 COCI			XDH1X	UC1D1	11.80	6.71	4.84								
		Commingled DS1 Interoffice Channel			XDH1X	U1TF1	79.02	181.24	123.53	56.72	22.32						
		Commingled DS1 Interoffice Channel Mileage			XDH1X	1L5XX	0.19										
		Commingled DS1/DS0 Channel System			XDH1X	MQ1	113.33	57.26	14.74	1.86	1.67						
		Commingled DS1 Local Loop Zone 1		1	XDH1X	USLXX	86.47	210.70	114.60	63.96	17.97						
		Commingled DS1 Local Loop Zone 2		2	XDH1X	USLXX	114.10	210.70	114.60	63.96	17.97						
		Commingled DS1 Local Loop Zone 3		3	XDH1X	USLXX	297.76	210.70	114.60	63.96	17.97						
		Commingled DS3 Local Loop			HFQC6	UE3PX	308.31										
		Commingled DS3/STS-1 Local Loop Mileage			HFQC6, HFRST	1L5ND	9.25										
		Commingled STS-1 Local Loop			HFRST	UDLS1	320.51	237.36	147.69	83.43	32.67						
		Commingled DS3/DS1 Channel System			HFQC6	MQ3	158.20	115.48	56.53	15.12	5.30						
		Commingled DS3 Interoffice Channel			HFQC6	U1TF3	966.89	350.56	141.58	48.00	23.39						
		Commingled DS3 Interoffice Channel Mileage			HFQC6	1L5XX	4.09										
		Commingled STS-1Interoffice Channel			HFRST	U1TFS	945.79	350.56	141.58	48.00	23.39						
		Commingled STS-1Interoffice Channel Mileage			HFRST	1L5XX	4.09										
		Commingled Dark Fiber - Interoffice Transport, Per Four Fiber Strands, Per Route Mile Or Fraction Thereof			HEQDL	1L5DF	30.74										
		Commingled Dark Fiber - Interoffice Transport, Per Four Fiber Strands, Per Route Mile Or Fraction Thereof			HEQDL	UDF14		732.53	192.67	377.27	241.67						
		UNE to Commingled Conversion Tracking			XDH1X, HFQC6	CMGUN	0.00	0.00	0.00	0.00	0.00						
		SPA to Commingled Conversion Tracking			XDH1X, HFQC6	CMGSP	0.00	0.00	0.00	0.00	0.00						
LNP Query Service																	
		LNP Charge Per query					0.0008695										
		LNP Service Establishment Manual						13.82	13.82	12.71	12.71						
		LNP Service Provisioning with Point Code Establishment						953.27	487.00	431.95	317.61						
911 PBX LOCATE																	
	911 PBX LOCATE DATABASE CAPABILITY																
		Service Establishment per CLEC per End User Account			9PBDC	9PBEU		1,814.00									
		Changes to TN Range or Customer Profile			9PBDC	9PBTN		181.57									
		Per Telephone Number (Monthly)			9PBDC	9PBMM	0.07										
		Change Company (Service Provider) ID			9PBDC	9PBPC		533.00									
		PBX Locate Service Support per CLEC (Monthlt)			9PBDC	9PBMR	179.88										
		Service Order Charge			9PBDC	9PBSC		7.86									
	911 PBX LOCATE TRANSPORT COMPONENT																
	See Att 3																
	Note: Rates displaying an "I" in Interim column are interim as a result of a Commission order.																

UNBUNDLED NETWORK ELEMENTS - Louisiana																	Att: 2 Exh: A
CATEGORY		RATE ELEMENTS	Interim	Zone	BCS	USOC	RATES($)					Svc Order Submitted Elec per LSR	Svc Order Submitted Manually per LSR	Incremental Charge - Manual Svc Order vs. Electronic-1st	Incremental Charge - Manual Svc Order vs. Electronic-Add'l	Incremental Charge - Manual Svc Order vs. Electronic-Disc 1st	Incremental Charge - Manual Svc Order vs. Electronic-Disc Add'l
							Rec	Nonrecurring		Nonrecurring Disconnect		OSS Rates($)					
								First	Add'l	First	Add'l	SOMEC	SOMAN	SOMAN	SOMAN	SOMAN	SOMAN
	The "Zone" shown in the sections for stand-alone loops or loops as part of a combination refers to Geographically Deaveraged UNE Zones. To view Geographically Deaveraged UNE Zone Designations by Central Office, refer to internet Website: http://www.interconnection.bellsouth.com/become_a_clec/html/interconnection.htm																
OPERATIONS SUPPORT SYSTEMS (OSS) - "REGIONAL RATES"																	
	NOTE: (1) CLEC should contact its contract negotiator if it prefers the "state specific" OSS charges as ordered by the State Commissions. The OSS charges currently contained in this rate exhibit are the AT&T "regional" service ordering charges. CLEC may elect either the state specific Commission ordered rates for the service ordering charges, or CLEC may elect the regional service ordering charge, however, CLEC can not obtain a mixture of the two regardless if CLEC has a interconnection contract established in each of the 9 states.																
	NOTE: (2) Any element that can be ordered electronically will be billed according to the SOMEC rate listed in this category. Please refer to AT&T's Local Ordering Handbook (LOH) to determine if a product can be ordered electronically. For those elements that cannot be ordered electronically at present per the LOH, the listed SOMEC rate in this category reflects the charge that would be billed to a CLEC once electronic ordering capabilities come on-line for that element. Otherwise, the manual ordering charge, SOMAN, will be applied to a CLECs bill when it submits an LSR to AT&T.																
		OSS - Electronic Service Order Charge, Per Local Service Request (LSR) - UNE Only				SOMEC		3.50	0.00	3.50	0.00						
		OSS - Manual Service Order Charge, Per Local Service Request (LSR) - UNE Only				SOMAN		15.20	0.00	15.20	0.00						
UNE SERVICE DATE ADVANCEMENT CHARGE																	
	NOTE: The Expedite charge will be maintained commensurate with BellSouth's FCC No.1 Tariff, Section 5 as applicable.																
		UNE Expedite Charge per Circuit or Line Assignable USOC, per Day			UAL, UEANL, UCL, UEF, UDF, UEQ, UDL, UENTW, UDN, UEA, UHL, ULC, USL, U1T12, U1T48, U1TD1, U1TD3, U1TDX, U1TO3, U1TS1, U1TVX, UC1BC, UC1BL, UC1CC, UC1CL, UC1DC, UC1DL, UC1EC, UC1EL, UC1FC, UC1FL, UC1GC, UC1GL, UC1HC, UC1HL, UDL12, UDL48, UDLO3, UDLSX, UE3, ULD12, ULD48, ULDD1, ULDD3, ULDDX, ULDO3, ULDS1, ULDVX, UNC1X, UNC3X, UNCDX, UNCNX, UNCSX, UNCVX, UNLD1, UNLD3, UXTD1, UXTD3, UXTS1, U1TUC, U1TUD, U1TUB, U1TUA,NTCVG, NTCUD, NTCD1	SDASP		200.00									
ORDER MODIFICATION CHARGE																	
		Order Modification Charge (OMC)						26.21	0.00	0.00	0.00						
		Order Modification Additional Dispatch Charge (OMCAD)						150.00	0.00	0.00	0.00						
UNBUNDLED EXCHANGE ACCESS LOOP																	
	2-WIRE ANALOG VOICE GRADE LOOP																
		2-Wire Analog Voice Grade Loop - Service Level 1- Zone 1		1	UEANL	UEAL2	12.90	36.54	16.87								
		2-Wire Analog Voice Grade Loop - Service Level 1- Zone 2		2	UEANL	UEAL2	23.33	36.54	16.87								
		2-Wire Analog Voice Grade Loop - Service Level 1- Zone 3		3	UEANL	UEAL2	48.43	36.54	16.87								
		2-Wire Analog Voice Grade Loop - Service Level 1- Zone 1		1	UEANL	UEASL	12.90	36.54	16.87								
		2-Wire Analog Voice Grade Loop - Service Level 1- Zone 2		2	UEANL	UEASL	23.33	36.54	16.87								
		2-Wire Analog Voice Grade Loop - Service Level 1- Zone 3		3	UEANL	UEASL	48.43	36.54	16.87								
		Tag Loop at End User Premise			UEANL	URETL		8.92	0.88								
		Loop Testing - Basic 1st Half Hour			UEANL	URET1		33.17	0.00								
		Loop Testing - Basic Additional Half Hour			UEANL	URETA		19.28	19.28								
		Manual Order Coordination for UVL-SL1s (per loop)			UEANL	UEAMC		7.92	7.92								
		Order Coordination for Specified Conversion Time for UVL-SL1 (per LSR)			UEANL	OCOSL		17.56	17.56								

CATEGORY	RATE ELEMENTS	Interim	Zone	BCS	USOC	RATES($)					Svc Order Submitted Elec per LSR	Svc Order Submitted Manually per LSR	Incremental Charge - Manual Svc Order vs. Electronic-1st	Incremental Charge - Manual Svc Order vs. Electronic-Add'l	Incremental Charge - Manual Svc Order vs. Electronic-Disc 1st	Incremental Charge - Manual Svc Order vs. Electronic-Disc Add'l
						Rec	Nonrecurring		Nonrecurring Disconnect		OSS Rates($)					
							First	Add'l	First	Add'l	SOMEC	SOMAN	SOMAN	SOMAN	SOMAN	SOMAN
	Unbundled Non-Design Voice Loop, billing for AT&T providing make-up (Engineering Information - E.I.)			UEANL	UEANM		13.04	13.04								
	Unbundled Loop Service Rearrangement, change in loop facility, per circuit			UEANL	UREWO		15.75	8.93								
	Bulk Migration, per 2 Wire Voice Loop-SL1			UEANL	UREPN		36.54	16.87								
	Bulk Migration Order Coordination, per 2 Wire Voice Loop-SL1			UEANL	UREPM		7.92	7.92								
	2-WIRE Unbundled COPPER LOOP															
	2-Wire Unbundled Copper Loop - Non-Designed Zone 1	I	1	UEQ	UEQ2X	12.40	35.27	15.60								
	2 Wire Unbundled Copper Loop - Non-Designed - Zone 2	I	2	UEQ	UEQ2X	14.32	35.27	15.60								
	2 Wire Unbundled Copper Loop - Non-Designed - Zone 3	I	3	UEQ	UEQ2X	16.87	35.27	15.60								
	Unbundled Miscellaneous Rate Element, Tag Loop at End User Premise			UEQ	URETL		8.92	0.88								
	Loop Testing - Basic 1st Half Hour			UEQ	URET1		33.17	0.00								
	Loop Testing - Basic Additional Half Hour			UEQ	URETA		19.28	19.28								
	Manual Order Coordination 2 Wire Unbundled Copper Loop - Non-Designed (per loop)			UEQ	USBMC		7.92	7.92								
	Unbundled Copper Loop - Non-Design, billing for AT&T providing make-up (Engineering Information - E.I.)			UEQ	UEQMU		13.04	13.04								
	Unbundled Loop Service Rearrangement, change in loop facility, per circuit			UEQ	UREWO		14.25	7.42								
	Bulk Migration, per 2 Wire UCL-ND			UEQ	UREPN		35.27	15.60								
	Bulk Migration Order Coordination, per 2 Wire UCL-ND			UEQ	UREPM		7.92	7.92								
UNBUNDLED EXCHANGE ACCESS LOOP																
	2-WIRE ANALOG VOICE GRADE LOOP															
	2-Wire Analog Voice Grade Loop - Service Level 2 w/Loop or Ground Start Signaling - Zone 1		1	UEA	UEAL2	14.93	102.10	65.72								
	2-Wire Analog Voice Grade Loop - Service Level 2 w/Loop or Ground Start Signaling - Zone 2		2	UEA	UEAL2	25.35	102.10	65.72								
	2-Wire Analog Voice Grade Loop - Service Level 2 w/Loop or Ground Start Signaling - Zone 3		3	UEA	UEAL2	50.46	102.10	65.72								
	2-Wire Analog Voice Grade Loop - Service Level 2 w/Reverse Battery Signaling - Zone 1		1	UEA	UEAR2	14.93	102.10	65.72								
	2-Wire Analog Voice Grade Loop - Service Level 2 w/Reverse Battery Signaling - Zone 2		2	UEA	UEAR2	25.35	102.10	65.72								
	2-Wire Analog Voice Grade Loop - Service Level 2 w/Reverse Battery Signaling - Zone 3		3	UEA	UEAR2	50.46	102.10	65.72								
	Switch-As-Is Conversion rate per UNE Loop, Single LSR, (per DS0)			UEA	URESL		24.98	3.52								
	Switch-As-Is Conversion rate per UNE Loop, Spreadsheet, (per DS0)			UEA	URESP		26.47	5.01								
	Unbundled Loop Service Rearrangement, change in loop facility, per circuit			UEA	UREWO		87.59	36.30								
	Loop Tagging - Service Level 2 (SL2)			UEA	URETL		11.20	1.10								
	Bulk Migration, per 2 Wire Voice Loop-SL2			UEA	UREPN		102.10	65.72								
	Bulk Migration Order Coordination, per 2 Wire Voice Loop-SL2			UEA	UREPM		0.00	0.00								
	4-WIRE ANALOG VOICE GRADE LOOP															
	4-Wire Analog Voice Grade Loop - Zone 1		1	UEA	UEAL4	30.81	127.40	91.02								
	4-Wire Analog Voice Grade Loop - Zone 2		2	UEA	UEAL4	38.32	127.40	91.02								
	4-Wire Analog Voice Grade Loop - Zone 3		3	UEA	UEAL4	60.39	127.40	91.02								
	Switch-As-Is Conversion rate per UNE Loop, Single LSR, (per DS0)			UEA	URESL		24.98	3.52								
	Switch-As-Is Conversion rate per UNE Loop, Spreadsheet, (per DS0)			UEA	URESP		26.47	5.01								
	Unbundled Loop Service Rearrangement, change in loop facility, per circuit			UEA	UREWO		87.59	36.30								
	2-WIRE ISDN DIGITAL GRADE LOOP															
	2-Wire ISDN Digital Grade Loop - Zone 1		1	UDN	U1L2X	22.09	113.34	76.96								
	2-Wire ISDN Digital Grade Loop - Zone 2		2	UDN	U1L2X	35.28	113.34	76.96								
	2-Wire ISDN Digital Grade Loop - Zone 3		3	UDN	U1L2X	65.18	113.34	76.96								
	Unbundled Loop Service Rearrangement, change in loop facility, per circuit			UDN	UREWO		91.49	44.09								
	2-WIRE ASYMMETRICAL DIGITAL SUBSCRIBER LINE (ADSL) COMPATIBLE LOOP															
	2 Wire Unbundled ADSL Loop including manual service inquiry & facility reservation - Zone 1		1	UAL	UAL2X	12.29	117.08	68.36								

CATEGORY	RATE ELEMENTS	Interim	Zone	BCS	USOC	RATES($)					Svc Order Submitted Elec per LSR	Svc Order Submitted Manually per LSR	Incremental Charge - Manual Svc Order vs. Electronic-1st	Incremental Charge - Manual Svc Order vs. Electronic-Add'l	Incremental Charge - Manual Svc Order vs. Electronic-Disc 1st	Incremental Charge - Manual Svc Order vs. Electronic-Disc Add'l
						Rec	Nonrecurring		Nonrecurring Disconnect		OSS Rates($)					
							First	Add'l	First	Add'l	SOMEC	SOMAN	SOMAN	SOMAN	SOMAN	SOMAN
	2 Wire Unbundled ADSL Loop including manual service inquiry & facility reservation - Zone 2		2	UAL	UAL2X	14.09	117.08	68.36								
	2 Wire Unbundled ADSL Loop including manual service inquiry & facility reservation - Zone 3		3	UAL	UAL2X	15.75	117.08	68.36								
	2 Wire Unbundled ADSL Loop without manual service inquiry & facility reservaton - Zone 1		1	UAL	UAL2W	12.29	92.83	56.02								
	2 Wire Unbundled ADSL Loop without manual service inquiry & facility reservaton - Zone 2		2	UAL	UAL2W	14.09	92.83	56.02								
	2 Wire Unbundled ADSL Loop without manual service inquiry & facility reservaton - Zone 3		3	UAL	UAL2W	15.75	92.83	56.02								
	Unbundled Loop Service Rearrangement, change in loop facility, per circuit			UAL	UREWO		86.07	40.34								
2-WIRE HIGH BIT RATE DIGITAL SUBSCRIBER LINE (HDSL) COMPATIBLE LOOP																
	2 Wire Unbundled HDSL Loop including manual service inquiry & facility reservation - Zone 1		1	UHL	UHL2X	9.79	125.50	76.77								
	2 Wire Unbundled HDSL Loop including manual service inquiry & facility reservation - Zone 2		2	UHL	UHL2X	11.52	125.50	76.77								
	2 Wire Unbundled HDSL Loop including manual service inquiry & facility reservation - Zone 3		3	UHL	UHL2X	12.74	125.50	76.77								
	2 Wire Unbundled HDSL Loop without manual service inquiry and facility reservation - Zone 1		1	UHL	UHL2W	9.79	101.24	64.43								
	2 Wire Unbundled HDSL Loop without manual service inquiry and facility reservation - Zone 2		2	UHL	UHL2W	11.52	101.24	64.43								
	2 Wire Unbundled HDSL Loop without manual service inquiry and facility reservation - Zone 3		3	UHL	UHL2W	12.74	101.24	64.43								
	Unbundled Loop Service Rearrangement, change in loop facility, per circuit			UHL	UREWO		86.00	40.34								
4-WIRE HIGH BIT RATE DIGITAL SUBSCRIBER LINE (HDSL) COMPATIBLE LOOP																
	4 Wire Unbundled HDSL Loop including manual service inquiry and facility reservation - Zone 1		1	UHL	UHL4X	16.24	153.26	104.54								
	4-Wire Unbundled HDSL Loop including manual service inquiry and facility reservation - Zone 2		2	UHL	UHL4X	16.65	153.26	104.54								
	4-Wire Unbundled HDSL Loop including manual service inquiry and facility reservation - Zone 3		3	UHL	UHL4X	17.34	153.26	104.54								
	4-Wire Unbundled HDSL Loop without manual service inquiry and facility reservation - Zone 1		1	UHL	UHL4W	16.24	129.00	92.20								
	4-Wire Unbundled HDSL Loop without manual service inquiry and facility reservation - Zone 2		2	UHL	UHL4W	16.65	129.00	92.20								
	4-Wire Unbundled HDSL Loop without manual service inquiry and facility reservation - Zone 3		3	UHL	UHL4W	17.34	129.00	92.20								
	Unbundled Loop Service Rearrangement, change in loop facility, per circuit			UHL	UREWO		86.00	40.34								
4-WIRE DS1 DIGITAL LOOP																
	4-Wire DS1 Digital Loop - Zone 1		1	USL	USLXX	85.70	245.16	152.98								
	4-Wire DS1 Digital Loop - Zone 2		2	USL	USLXX	194.96	245.16	152.98								
	4-Wire DS1 Digital Loop - Zone 3		3	USL	USLXX	491.94	245.16	152.98								
	Switch-As-Is Conversion rate per UNE Loop, Single LSR, (per DS1)			USL	URESL		24.98	3.52								
	Switch-As-Is Conversion rate per UNE Loop, Spreadsheet, (per DS1)			USL	URESP		26.47	5.01								
	Unbundled Loop Service Rearrangement, change in loop facility, per circuit			USL	UREWO		100.93	42.98								
4-WIRE 19.2, 56 OR 64 KBPS DIGITAL GRADE LOOP																
	4 Wire Unbundled Digital Loop 2.4 Kbps - Zone 1		1	UDL	UDL2X	30.99	121.86	85.48								
	4 Wire Unbundled Digital Loop 2.4 Kbps - Zone 2		2	UDL	UDL2X	36.78	121.86	85.48								
	4 Wire Unbundled Digital Loop 2.4 Kbps - Zone3		3	UDL	UDL2X	38.92	121.86	85.48								
	4 Wire Unbundled Digital Loop 4.8 Kbps -Zone 1		1	UDL	UDL4X	30.99	121.86	85.48								
	4 Wire Unbundled Digital Loop 4.8 Kbps - Zone 2		2	UDL	UDL4X	36.78	121.86	85.48								
	4 Wire Unbundled Digital Loop 4.8 Kbps - Zone 3		3	UDL	UDL4X	38.92	121.86	85.48								
	4 Wire Unbundled Digital Loop 9.6 Kbps - Zone 1		1	UDL	UDL9X	30.99	121.86	85.48								
	5 Wire Unbundled Digital Loop 9.6 Kbps - Zone 2		2	UDL	UDL9X	36.78	121.86	85.48								
	6 Wire Unbundled Digital Loop 9.6 Kbps - Zone 3		3	UDL	UDL9X	38.92	121.86	85.48								
	4 Wire Unbundled Digital 19.2 Kbps - Zone 1		1	UDL	UDL19	30.99	121.86	85.48								
	4 Wire Unbundled Digital 19.2 Kbps - Zone 2		2	UDL	UDL19	36.78	121.86	85.48								

UNBUNDLED NETWORK ELEMENTS - Louisiana																	Att: 2 Exh: A
CATEGORY		RATE ELEMENTS	Interim	Zone	BCS	USOC	RATES($)					Svc Order Submitted Elec per LSR	Svc Order Submitted Manually per LSR	Incremental Charge - Manual Svc Order vs. Electronic-1st	Incremental Charge - Manual Svc Order vs. Electronic-Add'l	Incremental Charge - Manual Svc Order vs. Electronic-Disc 1st	Incremental Charge - Manual Svc Order vs. Electronic-Disc Add'l
							Rec	Nonrecurring		Nonrecurring Disconnect		OSS Rates($)					
								First	Add'l	First	Add'l	SOMEC	SOMAN	SOMAN	SOMAN	SOMAN	SOMAN
		4 Wire Unbundled Digital 19.2 Kbps - Zone 3		3	UDL	UDL19	38.92	121.86	85.48								
		4 Wire Unbundled Digital Loop 56 Kbps - Zone 1		1	UDL	UDL56	30.99	121.86	85.48								
		4 Wire Unbundled Digital Loop 56 Kbps - Zone 2		2	UDL	UDL56	36.78	121.86	85.48								
		4 Wire Unbundled Digital Loop 56 Kbps - Zone 3		3	UDL	UDL56	38.92	121.86	85.48								
		4 Wire Unbundled Digital Loop 64 Kbps - Zone 1		1	UDL	UDL64	30.99	121.86	85.48								
		4 Wire Unbundled Digital Loop 64 Kbps - Zone 2		2	UDL	UDL64	36.78	121.86	85.48								
		4 Wire Unbundled Digital Loop 64 Kbps - Zone 3		3	UDL	UDL64	38.92	121.86	85.48								
		Switch-As-Is Conversion rate per UNE Loop, Single LSR, (per DS0)			UDL	URESL		24.98	3.52								
		Switch-As-Is Conversion rate per UNE Loop, Spreadsheet, (per DS0)			UDL	URESP		26.47	5.01								
		Unbundled Loop Service Rearrangement, change in loop facility, per circuit			UDL	UREWO		101.97	49.67								
	2-WIRE Unbundled COPPER LOOP																
		2-Wire Unbundled Copper Loop-Designed including manual service inquiry & facility reservation - Zone 1		1	UCL	UCLPB	12.29	116.18	67.46								
		2-Wire Unbundled Copper Loop-Designed including manual service inquiry & facility reservation - Zone 2		2	UCL	UCLPB	14.09	116.18	67.46								
		2 Wire Unbundled Copper Loop-Designed including manual service inquiry & facility reservation - Zone 3		3	UCL	UCLPB	15.75	116.18	67.46								
		2-Wire Unbundled Copper Loop-Designed without manual service inquiry and facility reservation - Zone 1		1	UCL	UCLPW	12.29	91.92	55.12								
		2-Wire Unbundled Copper Loop-Designed without manual service inquiry and facility reservation - Zone 2		2	UCL	UCLPW	14.09	91.92	55.12								
		2-Wire Unbundled Copper Loop-Designed without manual service inquiry and facility reservation - Zone 3		3	UCL	UCLPW	15.75	91.92	55.12								
		Order Coordination for Unbundled Copper Loops (per loop)			UCL	UCLMC		7.92	7.92								
		Unbundled Loop Service Rearrangement, change in loop facility, per circuit			UCL	UREWO		91.92	42.47								
	4-WIRE COPPER LOOP																
		4-Wire Copper Loop-Designed including manual service inquiry and facility reservation - Zone 1		1	UCL	UCL4S	22.27	139.69	90.96								
		4-Wire Copper Loop-Designed including manual service inquiry and facility reservation - Zone 2		2	UCL	UCL4S	18.95	139.69	90.96								
		4-Wire Copper Loop-Designed including manual service inquiry and facility reservation - Zone 3		3	UCL	UCL4S	10.99	139.69	90.96								
		4-Wire Copper Loop-Designed without manual service inquiry and facility reservation - Zone 1		1	UCL	UCL4W	22.27	115.43	78.63								
		4-Wire Copper Loop-Designed without manual service inquiry and facility reservation - Zone 2		2	UCL	UCL4W	18.95	115.43	78.63								
		4-Wire Copper Loop-Designed without manual service inquiry and facility reservation - Zone 3		3	UCL	UCL4W	10.99	115.43	78.63								
		Order Coordination for Unbundled Copper Loops (per loop)			UCL	UCLMC		7.92	7.92								
		Unbundled Loop Service Rearrangement, change in loop facility, per circuit			UCL	UREWO		91.92	42.47								
		Order Coordination for Specified Conversion Time (per LSR)			UEA, UDN, UAL, UHL, UDL, USL	OCOSL		17.56									
	Rearrangements																
		EEL to UNE-L Retermination, per 2 Wire Unbundled Voice Loop-SL2			UEA	UREEL		87.59	36.30								
		EEL to UNE-L Retermination, per 4 Wire Unbundled Voice Loop			UEA	UREEL		87.59	36.30								
		EEL to UNE-L Retermination, per 2 Wire ISDN Loop			UDN	UREEL		91.49	44.09								
		EEL to UNE-L Retermination, per 4 Wire Unbundled Digital Loop			UDL	UREEL		101.97	49.67								
		EEL to UNE-L Retermination, per 4 Wire Unbundled DS1 Loop			USL	UREEL		100.93	42.98								
UNE LOOP COMMINGLING																	
	2-WIRE ANALOG VOICE GRADE LOOP - COMMINGLING																
		2-Wire Analog Voice Grade Loop - Service Level 2 w/Loop or Ground Start Signaling - Zone 1		1	NTCVG	UEAL2	14.93	102.10	65.72								
		2-Wire Analog Voice Grade Loop - Service Level 2 w/Loop or Ground Start Signaling - Zone 2		2	NTCVG	UEAL2	25.35	102.10	65.72								
		2-Wire Analog Voice Grade Loop - Service Level 2 w/Loop or Ground Start Signaling - Zone 3		3	NTCVG	UEAL2	50.46	102.10	65.72								

UNBUNDLED NETWORK ELEMENTS - Louisiana																	Att: 2 Exh: A
CATEGORY		RATE ELEMENTS	Interim	Zone	BCS	USOC	RATES($)					Svc Order Submitted Elec per LSR	Svc Order Submitted Manually per LSR	Incremental Charge - Manual Svc Order vs. Electronic-1st	Incremental Charge - Manual Svc Order vs. Electronic-Add'l	Incremental Charge - Manual Svc Order vs. Electronic-Disc 1st	Incremental Charge - Manual Svc Order vs. Electronic-Disc Add'l
							Rec	Nonrecurring		Nonrecurring Disconnect		OSS Rates($)					
								First	Add'l	First	Add'l	SOMEC	SOMAN	SOMAN	SOMAN	SOMAN	SOMAN
		2-Wire Analog Voice Grade Loop - Service Level 2 w/Reverse Battery Signaling - Zone 1		1	NTCVG	UEAR2	14.93	102.10	65.72								
		2-Wire Analog Voice Grade Loop - Service Level 2 w/Reverse Battery Signaling - Zone 2		2	NTCVG	UEAR2	25.35	102.10	65.72								
		2-Wire Analog Voice Grade Loop - Service Level 2 w/Reverse Battery Signaling - Zone 3		3	NTCVG	UEAR2	50.46	102.10	65.72								
		Switch-As-Is Conversion rate per UNE Loop, Single LSR, (per DS0)			NTCVG	URESL		24.98	3.52								
		Switch-As-Is Conversion rate per UNE Loop, Spreadsheet, (per DS0)			NTCVG	URESP		26.47	5.01								
		Unbundled Loop Service Rearrangement, change in loop facility, per circuit			NTCVG	UREWO		87.59	36.30								
		Loop Tagging - Service Level 2 (SL2)			NTCVG	URETL		11.20	1.10								
	4-WIRE ANALOG VOICE GRADE LOOP																
		4-Wire Analog Voice Grade Loop - Zone 1		1	NTCVG	UEAL4	30.81	127.40	91.02	0.00	0.00						
		4-Wire Analog Voice Grade Loop - Zone 2		2	NTCVG	UEAL4	38.32	127.40	91.02	0.00	0.00						
		4-Wire Analog Voice Grade Loop - Zone 3		3	NTCVG	UEAL4	60.39	127.40	91.02	0.00	0.00						
		Switch-As-Is Conversion rate per UNE Loop, Single LSR, (per DS0)			NTCVG	URESL		24.98	3.52								
		Switch-As-Is Conversion rate per UNE Loop, Spreadsheet, (per DS0)			NTCVG	URESP		26.47	5.01								
		Unbundled Loop Service Rearrangement, change in loop facility, per circuit			NTCVG	UREWO		87.59	36.30								
	4-WIRE DS1 DIGITAL LOOP																
		4-Wire DS1 Digital Loop - Zone 1		1	NTCD1	USLXX	85.70	245.16	152.98								
		4-Wire DS1 Digital Loop - Zone 2		2	NTCD1	USLXX	194.96	245.16	152.98								
		4-Wire DS1 Digital Loop - Zone 3		3	NTCD1	USLXX	491.94	245.16	152.98								
		Switch-As-Is Conversion rate per UNE Loop, Single LSR, (per DS1)			NTCD1	URESL		24.98	3.52								
		Switch-As-Is Conversion rate per UNE Loop, Spreadsheet, (per DS1)			NTCD1	URESP		26.47	5.01								
		Unbundled Loop Service Rearrangement, change in loop facility, per circuit			NTCD1	UREWO		100.93	42.98								
	4-WIRE 19.2, 56 OR 64 KBPS DIGITAL GRADE LOOP																
		4 Wire Unbundled Digital Loop 2.4 Kbps - Zone 1		1	NTCUD	UDL2X	30.99	121.86	85.48								
		4 Wire Unbundled Digital Loop 2.4 Kbps - Zone 2		2	NTCUD	UDL2X	36.78	121.86	85.48								
		4 Wire Unbundled Digital Loop 2.4 Kbps - Zone3		3	NTCUD	UDL2X	38.92	121.86	85.48								
		4 Wire Unbundled Digital Loop 4.8 Kbps -Zone 1		1	NTCUD	UDL4X	30.99	121.86	85.48								
		4 Wire Unbundled Digital Loop 4.8 Kbps - Zone 2		2	NTCUD	UDL4X	36.78	121.86	85.48								
		4 Wire Unbundled Digital Loop 4.8 Kbps - Zone 3		3	NTCUD	UDL4X	38.92	121.86	85.48								
		4 Wire Unbundled Digital Loop 9.6 Kbps - Zone 1		1	NTCUD	UDL9X	30.99	121.86	85.48								
		5 Wire Unbundled Digital Loop 9.6 Kbps - Zone 2		2	NTCUD	UDL9X	36.78	121.86	85.48								
		6 Wire Unbundled Digital Loop 9.6 Kbps - Zone 3		3	NTCUD	UDL9X	38.92	121.86	85.48								
		4 Wire Unbundled Digital 19.2 Kbps - Zone 1		1	NTCUD	UDL19	30.99	121.86	85.48								
		4 Wire Unbundled Digital 19.2 Kbps - Zone 2		2	NTCUD	UDL19	36.78	121.86	85.48								
		4 Wire Unbundled Digital 19.2 Kbps - Zone 3		3	NTCUD	UDL19	38.92	121.86	85.48								
		4 Wire Unbundled Digital Loop 56 Kbps - Zone 1		1	NTCUD	UDL56	30.99	121.86	85.48								
		4 Wire Unbundled Digital Loop 56 Kbps - Zone 2		2	NTCUD	UDL56	36.78	121.86	85.48								
		4 Wire Unbundled Digital Loop 56 Kbps - Zone 3		3	NTCUD	UDL56	38.92	121.86	85.48								
		4 Wire Unbundled Digital Loop 64 Kbps - Zone 1		1	NTCUD	UDL64	30.99	121.86	85.48								
		4 Wire Unbundled Digital Loop 64 Kbps - Zone 2		2	NTCUD	UDL64	36.78	121.86	85.48								
		4 Wire Unbundled Digital Loop 64 Kbps - Zone 3		3	NTCUD	UDL64	38.92	121.86	85.48								
		Switch-As-Is Conversion rate per UNE Loop, Single LSR, (per DS0)			NTCUD	URESL		24.98	3.52								
		Switch-As-Is Conversion rate per UNE Loop, Spreadsheet, (per DS0)			NTCUD	URESP		26.47	5.01								
		Unbundled Loop Service Rearrangement, change in loop facility, per circuit			NTCUD	UREWO		101.97	49.67								
		Order Coordination for Specified Conversion Time (per LSR)			NTCVG, NTCUD, NTCD1	OCOSL		17.56									
MAINTENANCE OF SERVICE																	

UNBUNDLED NETWORK ELEMENTS - Louisiana																	Att: 2 Exh: A
CATEGORY		RATE ELEMENTS	Interim	Zone	BCS	USOC	RATES($)					Svc Order Submitted Elec per LSR	Svc Order Submitted Manually per LSR	Incremental Charge - Manual Svc Order vs. Electronic-1st	Incremental Charge - Manual Svc Order vs. Electronic-Add'l	Incremental Charge - Manual Svc Order vs. Electronic-Disc 1st	Incremental Charge - Manual Svc Order vs. Electronic-Disc Add'l
							Rec	Nonrecurring		Nonrecurring Disconnect		OSS Rates($)					
								First	Add'l	First	Add'l	SOMEC	SOMAN	SOMAN	SOMAN	SOMAN	SOMAN
		Maintenance of Service Charge, Basic Time, per half hour			UDC, UEA, UDL, UDN, USL, UAL, UHL, UCL, NTCVG, NTCUD, NTCD1, U1TD1, U1TD3, U1TDX, U1TS1, U1TVX, UDF, UDFCX, UDLSX, UE3, ULDD1, ULDD3, ULDDX, ULDS1, ULDVX, UNC1X, UNC3X, UNCDX, UNCSX, UNCVX, ULS	MVVBT		80.00	55.00								
		Maintenance of Service Charge, Overtime, per half hour			UDC, UEA, UDL, UDN, USL, UAL, UHL, UCL, NTCVG, NTCUD, NTCD1, U1TD1, U1TD3, U1TDX, U1TS1, U1TVX, UDF, UDFCX, UDLSX, UE3, ULDD1, ULDD3, ULDDX, ULDS1, ULDVX, UNC1X, UNC3X, UNCDX, UNCSX, UNCVX, ULS	MVVOT		90.00	65.00								
		Maintenance of Service Charge, Premium, per half hour			UDC, UEA, UDL, UDN, USL, UAL, UHL, UCL, NTCVG, NTCUD, NTCD1, U1TD1, U1TD3, U1TDX, U1TS1, U1TVX, UDF, UDFCX, UDLSX, UE3, ULDD1, ULDD3, ULDDX, ULDS1, ULDVX, UNC1X, UNC3X, UNCDX, UNCSX, UNCVX, ULS	MVVPT		100.00	75.00								
LOOP MODIFICATION																	
		Unbundled Loop Modification, Removal of Load Coils - 2 Wire pair less than or equal to 18k ft, per Unbundled Loop			UAL, UHL, UCL, UEQ, ULS, UEA, UEANL, UEPSR, UEPSB	ULM2L		0.00	0.00								
		Unbundled Loop Modification Removal of Load Coils - 4 Wire less than or equal to 18K ft, per Unbundled Loop			UHL, UCL, UEA	ULM4L		0.00	0.00								
		Unbundled Loop Modification Removal of Bridged Tap Removal, per unbundled loop			UAL, UHL, UCL, UEQ, ULS, UEA, UEANL, UEPSR, UEPSB	ULMBT		12.15	12.15								
SUB-LOOPS																	
	Sub-Loop Distribution																
		Sub-Loop - Per Cross Box Location - CLEC Feeder Facility Set-Up			UEANL, UEF	USBSA		144.09	144.09								
		Sub-Loop - Per Cross Box Location - Per 25 Pair Panel Set-Up			UEANL, UEF	USBSB		10.99	10.99								
		Sub-Loop - Per Building Equipment Room - CLEC Feeder Facility Set-Up			UEANL	USBSC		86.16	86.16								
		Sub-Loop - Per Building Equipment Room - Per 25 Pair Panel Set-Up			UEANL	USBSD		27.13	27.13								

UNBUNDLED NETWORK ELEMENTS - Louisiana																	Att: 2 Exh: A
CATEGORY		RATE ELEMENTS	Interim	Zone	BCS	USOC	RATES($)					Svc Order Submitted Elec per LSR	Svc Order Submitted Manually per LSR	Incremental Charge - Manual Svc Order vs. Electronic-1st	Incremental Charge - Manual Svc Order vs. Electronic-Add'l	Incremental Charge - Manual Svc Order vs. Electronic-Disc 1st	Incremental Charge - Manual Svc Order vs. Electronic-Disc Add'l
							Rec	Nonrecurring		Nonrecurring Disconnect		OSS Rates($)					
								First	Add'l	First	Add'l	SOMEC	SOMAN	SOMAN	SOMAN	SOMAN	SOMAN
		Sub-Loop Distribution Per 2-Wire Analog Voice Grade Loop - Zone 1		1	UEANL	USBN2	7.57	63.89	30.06								
		Sub-Loop Distribution Per 2-Wire Analog Voice Grade Loop - Zone 2		2	UEANL	USBN2	12.75	63.89	30.06								
		Sub-Loop Distribution Per 2-Wire Analog Voice Grade Loop - Zone 3		3	UEANL	USBN2	21.45	63.89	30.06								
		Order Coordination for Unbundled Sub-Loops, per sub-loop pair			UEANL	USBMC		7.92	7.92								
		Sub-Loop Distribution Per 4-Wire Analog Voice Grade Loop - Zone 1		1	UEANL	USBN4	11.76	76.75	42.92								
		Sub-Loop Distribution Per 4-Wire Analog Voice Grade Loop - Zone 2		2	UEANL	USBN4	16.84	76.75	42.92								
		Sub-Loop Distribution Per 4-Wire Analog Voice Grade Loop - Zone 3		3	UEANL	USBN4	19.27	76.75	42.92								
		Order Coordination for Unbundled Sub-Loops, per sub-loop pair			UEANL	USBMC		7.92	7.92								
		Sub-Loop 2-Wire Intrabuilding Network Cable (INC)			UEANL	USBR2	2.91	51.48	17.65								
		Order Coordination for Unbundled Sub-Loops, per sub-loop pair			UEANL	USBMC		7.92	7.92								
		Sub-Loop 4-Wire Intrabuilding Network Cable (INC)			UEANL	USBR4	6.58	57.54	23.71								
		Order Coordination for Unbundled Sub-Loops, per sub-loop pair			UEANL	USBMC		7.92	7.92								
		Loop Testing - Basic 1st Half Hour			UEANL	URET1		33.17	0.00								
		Loop Testing - Basic Additional Half Hour			UEANL	URETA		19.28	19.28								
		2 Wire Copper Unbundled Sub-Loop Distribution - Zone 1		1	UEF	UCS2X	6.26	63.89	30.06								
		2 Wire Copper Unbundled Sub-Loop Distribution - Zone 2		2	UEF	UCS2X	10.07	63.89	30.06								
		2 Wire Copper Unbundled Sub-Loop Distribution - Zone 3		3	UEF	UCS2X	12.70	63.89	30.06								
		Order Coordination for Unbundled Sub-Loops, per sub-loop pair			UEF	USBMC		7.92	7.92								
		4 Wire Copper Unbundled Sub-Loop Distribution - Zone 1		1	UEF	UCS4X	8.03	76.75	42.92								
		4 Wire Copper Unbundled Sub-Loop Distribution - Zone 2		2	UEF	UCS4X	10.71	76.75	42.92								
		4 Wire Copper Unbundled Sub-Loop Distribution - Zone 3		3	UEF	UCS4X	6.08	76.75	42.92								
		Order Coordination for Unbundled Sub-Loops, per sub-loop pair			UEF	USBMC		7.92	7.92								
		Loop Tagging Service Level 1, Unbundled Copper Loop, Non-Designed and Distribution Subloops			UEF, UEANL	URETL		8.92	0.88								
		Loop Testing - Basic 1st Half Hour			UEF	URET1		33.17	0.00								
		Loop Testing - Basic Additional Half Hour			UEF	URETA		19.28	19.28								
	Unbundled Sub-Loop Modification																
		Unbundled Sub-Loop Modification - 2-W Copper Dist Load Coil/Equip Removal per 2-W PR			UEF	ULM2X		0.00	0.00								
		Unbundled Sub-loop Modification - 4-W Copper Dist Load Coil/Equip Removal per 4-W PR			UEF	ULM4X		0.00	0.00								
		Unbundled Loop Modification, Removal of Bridge Tap, per unbundled loop			UEF	ULMBT		224.55	4.29								
	Unbundled Network Terminating Wire (UNTW)																
		Unbundled Network Terminating Wire (UNTW) per Pair			UENTW	UENPP	0.3454	14.72	14.72								
	Network Interface Device (NID)																
		Network Interface Device (NID) - 1-2 lines			UENTW	UND12		42.26	27.83								
		Network Interface Device (NID) - 1-6 lines			UENTW	UND16		62.86	48.43								
		Network Interface Device Cross Connect - 2 W			UENTW	UNDC2		5.73	5.73								
		Network Interface Device Cross Connect - 4W			UENTW	UNDC4		5.73	5.73								
UNE OTHER, PROVISIONING ONLY - NO RATE																	
		Unbundled Contact Name, Provisioning Only - no rate			UAL, UCL, UDC, UDL, UDN, UEA, UHL, UEANL, UEF, UEQ, UENTW, NTCVG, NTCUD, NTCD1, USL	UNECN	0.00	0.00									
		Unbundled DS1 Loop - Superframe Format Option - no rate			USL, NTCD1	CCOSF		0.00									
		Unbundled DS1 Loop - Expanded Superframe Format option - no rate			USL, NTCD1	CCOEF		0.00									
		NID - Dispatch and Service Order for NID installation			UENTW	UNDBX	0.00	0.00									
		UNTW Circuit Establishment, Provisioning Only - No Rate			UENTW	UENCE	0.00	0.00									

UNBUNDLED NETWORK ELEMENTS - Louisiana																	Att: 2 Exh: A
CATEGORY		RATE ELEMENTS	Interim	Zone	BCS	USOC	RATES($)					Svc Order Submitted Elec per LSR	Svc Order Submitted Manually per LSR	Incremental Charge - Manual Svc Order vs. Electronic-1st	Incremental Charge - Manual Svc Order vs. Electronic-Add'l	Incremental Charge - Manual Svc Order vs. Electronic-Disc 1st	Incremental Charge - Manual Svc Order vs. Electronic-Disc Add'l
							Rec	Nonrecurring		Nonrecurring Disconnect		OSS Rates($)					
								First	Add'l	First	Add'l	SOMEC	SOMAN	SOMAN	SOMAN	SOMAN	SOMAN
LOOP MAKE-UP																	
		Loop Makeup - Preordering Without Reservation, per working or spare facility queried (Manual).			UMK	UMKLW		23.29	23.29								
		Loop Makeup - Preordering With Reservation, per spare facility queried (Manual).			UMK	UMKLP		24.70	24.70								
		Loop Makeup--With or Without Reservation, per working or spare facility queried (Mechanized)			UMK	UMKMQ		0.19	0.19								
LINE SPLITTING																	
	END USER ORDERING-CENTRAL OFFICE BASED																
		Line Splitting - per line activation DLEC owned splitter			UEPSR UEPSB	UREOS	0.61										
		Line Splitting - per line activation AT&T owned - physical			UEPSR UEPSB	UREBP	0.61	17.97	10.29								
		Line Splitting - per line activation AT&T owned - virtual			UEPSR UEPSB	UREBV	0.61	17.97	10.29								
	END USER ORDERING - REMOTE SITE LINE SPLITTING																
		Remote Site Shared Loop Line Activation for End Users - CLEC Owned Splitter			UEPSR UEPSB	URERS	0.61	56.83	23.00	7.19	7.19						
		Remote Site Shared Loop - Subsequent Activity - CLEC Owned Splitter			UEPSR UEPSB	URERA		53.82	21.35								
	UNBUNDLED EXCHANGE ACCESS LOOP																
	2-WIRE ANALOG VOICE GRADE LOOP																
		2 Wire Analog Voice Grade Loop-Service Level 1-Line Splitting-Zone 1		1	UEPSR UEPSB	UEALS	12.90	36.54	16.87	0.00	0.00						
		2 Wire Analog Voice Grade Loop-Service Level 1-Line Splitting-Zone 1		1	UEPSR UEPSB	UEABS	12.90	36.54	16.87	0.00	0.00						
		2 Wire Analog Voice Grade Loop- Service Level 1-Line Splitting-Zone 2		2	UEPSR UEPSB	UEALS	23.33	36.54	16.87	0.00	0.00						
		2 Wire Analog Voice Grade Loop- Service Level 1-Line Splitting-Zone 2		2	UEPSR UEPSB	UEABS	23.33	36.54	16.87	0.00	0.00						
		2 Wire Analog Voice Grade Loop-Service Level 1-Line Splitting-Zone 3		3	UEPSR UEPSB	UEALS	48.43	36.54	16.87	0.00	0.00						
		2 Wire Analog Voice Grade Loop-Service Level 1-Line Splitting-Zone 3		3	UEPSR UEPSB	UEABS	48.43	36.54	16.87	0.00	0.00						
		Remote Site 2 Wire Analog Voice Grade Loop -Service Level 1-Line Splitting - CLEC Owned Splitter - Zone 1		1	UEPSR UEPSB	UEARS	7.57	63.89	30.06	0.00	0.00						
		Remote Site 2 Wire Analog Voice Grade Loop -Service Level 1-Line Splitting - CLEC Owned Splitter - Zone 2		2	UEPSR UEPSB	UEARS	12.75	63.89	30.06	0.00	0.00						
		Remote Site 2 Wire Analog Voice Grade Loop -Service Level 1-Line Splitting - CLEC Owned Splitter - Zone 3		3	UEPSR UEPSB	UEARS	21.45	63.89	30.06	0.00	0.00						
	PHYSICAL COLLOCATION																
		Physical Collocation-2 Wire Cross Connects (Loop) for Line Splitting			UEPSR UEPSB	PE1LS	0.0318	11.94	11.46	0.00	0.00						
	VIRTUAL COLLOCATION																
		Virtual Collocation-2 Wire Cross Connects (Loop) for Line Splitting			UEPSR UEPSB	VE1LS	0.0296	11.94	11.46	0.00	0.00						
UNBUNDLED DEDICATED TRANSPORT																	
	INTEROFFICE CHANNEL - DEDICATED TRANSPORT																
		Interoffice Channel - 2-Wire Voice Grade - per mile			U1TVX	1L5XX	0.013										
		Interoffice Channel - 2-Wire Voice Grade - Facility Termination			U1TVX	U1TV2	22.60	39.36	26.62								
		Interoffice Channel - 2-Wire Voice Grade Rev Bat. - per mile			U1TVX	1L5XX	0.013										
		Interoffice Channel - 2-Wire VG Rev Bat. - Facility Termination			U1TVX	U1TR2	22.60	39.36	26.62								
		Interoffice Channel - 4-Wire Voice Grade - per mile			U1TVX	1L5XX	0.013										
		Interoffice Channel - 4- Wire Voice Grade - Facility Termination			U1TVX	U1TV4	19.81	39.36	26.62								
		Interoffice Channel - 56 kbps - per mile			U1TDX	1L5XX	0.013										
		Interoffice Channel - 56 kbps - Facility Termination			U1TDX	U1TD5	15.61	39.36	26.62								
		Interoffice Channel - 64 kbps - per mile			U1TDX	1L5XX	0.013										
		Interoffice Channel - 64 kbps - Facility Termination			U1TDX	U1TD6	15.61	39.36	26.62								
		Interoffice Channel - DS1 - per mile			U1TD1	1L5XX	0.2652										
		Interoffice Channel - DS1 - Facility Termination			U1TD1	U1TF1	70.47	86.69	79.44								
		Interoffice Channel - DS3 - per mile			U1TD3	1L5XX	6.04										
		Interoffice Channel - DS3 - Facility Termination			U1TD3	U1TF3	850.45	270.69	158.05								
		Interoffice Channel - STS-1 - per mile			U1TS1	1L5XX	6.04										
		Interoffice Channel - STS-1 - Facility Termination			U1TS1	U1TFS	830.19	270.69	158.05								
	UNBUNDLED DARK FIBER																

CATEGORY		RATE ELEMENTS	Interim	Zone	BCS	USOC	RATES($)					Svc Order Submitted Elec per LSR	Svc Order Submitted Manually per LSR	Incremental Charge - Manual Svc Order vs. Electronic-1st	Incremental Charge - Manual Svc Order vs. Electronic-Add'l	Incremental Charge - Manual Svc Order vs. Electronic-Disc 1st	Incremental Charge - Manual Svc Order vs. Electronic-Disc Add'l
							Rec	Nonrecurring		Nonrecurring Disconnect		OSS Rates($)					
								First	Add'l	First	Add'l	SOMEC	SOMAN	SOMAN	SOMAN	SOMAN	SOMAN
		Dark Fiber - Interoffice Transport, Per Four Fiber Strands, Per Route Mile Or Fraction Thereof			UDF, UDFCX	1L5DF	25.28										
		Dark Fiber - Interoffice Transport, Per Four Fiber Strands, Per Route Mile Or Fraction Thereof			UDF, UDFCX	UDF14		620.60	133.88								
HIGH CAPACITY UNBUNDLED LOCAL LOOP																	
	DS-3/STS-1 UNBUNDLED LOCAL LOOP - Stand Alone																
		DS3 Unbundled Local Loop - per mile			UE3	1L5ND	10.04										
		DS3 Unbundled Local Loop - Facility Termination			UE3	UE3PX	362.34	438.46	256.30								
		STS-1Unbundled Local Loop - per mile			UDLSX	1L5ND	10.04										
		STS-1 Unbundled Local Loop - Facility Termination			UDLSX	UDLS1	374.56	438.46	256.30								
ENHANCED EXTENDED LINK (EELs)																	
	Network Elements Used in Combinations																
		2-Wire VG Loop (SL2) in Combination - Zone 1		1	UNCVX	UEAL2	14.93	94.21	45.09								
		2-Wire VG Loop (SL2) in Combination - Zone 2		2	UNCVX	UEAL2	25.35	94.21	45.09								
		2-Wire VG Loop (SL2) in Combination - Zone 3		3	UNCVX	UEAL2	50.46	94.21	45.09								
		4-Wire Analog Voice Grade Loop in Combination - Zone 1		1	UNCVX	UEAL4	30.81	94.21	45.09								
		4-Wire Analog Voice Grade Loop in Combination - Zone 2		2	UNCVX	UEAL4	38.32	94.21	45.09								
		4-Wire Analog Voice Grade Loop in Combination - Zone 3		3	UNCVX	UEAL4	60.39	94.21	45.09								
		2-Wire ISDN Loop in Combination - Zone 1		1	UNCNX	U1L2X	22.09	94.21	45.09								
		2-Wire ISDN Loop in Combination - Zone 2		2	UNCNX	U1L2X	35.28	94.21	45.09								
		2-Wire ISDN Loop in Combination - Zone 3		3	UNCNX	U1L2X	65.18	94.21	45.09								
		4-Wire 56Kbps Digital Grade Loop in Combination - Zone 1		1	UNCDX	UDL56	30.99	94.21	45.09								
		4-Wire 56Kbps Digital Grade Loop in Combination - Zone 2		2	UNCDX	UDL56	36.78	94.21	45.09								
		4-Wire 56Kbps Digital Grade Loop in Combination - Zone 3		3	UNCDX	UDL56	38.92	94.21	45.09								
		4-Wire 64Kbps Digital Grade Loop in Combination - Zone 1		1	UNCDX	UDL64	30.99	94.21	45.09								
		4-Wire 64Kbps Digital Grade Loop in Combination - Zone 2		2	UNCDX	UDL64	36.78	94.21	45.09								
		4-Wire 64Kbps Digital Grade Loop in Combination - Zone 3		3	UNCDX	UDL64	38.92	94.21	45.09								
		4-Wire DS1 Digital Loop in Combination - Zone 1		1	UNC1X	USLXX	85.70	169.22	100.89								
		4-Wire DS1 Digital Loop in Combination - Zone 2		2	UNC1X	USLXX	194.96	169.22	100.89								
		4-Wire DS1 Digital Loop in Combination - Zone 3		3	UNC1X	USLXX	491.94	169.22	100.89								
		DS3 Local Loop in combination - per mile			UNC3X	1L5ND	10.04										
		DS3 Local Loop in combination - Facility Termination			UNC3X	UE3PX	362.34	188.45	125.51								
		STS-1 Local Loop in combination - per mile			UNCSX	1L5ND	10.04										
		STS-1 Local Loop in combination - Facility Termination			UNCSX	UDLS1	374.56	188.45	125.51								
		Interoffice Channel in combination - 2-wire VG - per mile			UNCVX	1L5XX	0.013										
		Interoffice Channel in combination - 2-wire VG - Facility Termination			UNCVX	U1TV2	22.60	72.60	41.75								
		Interoffice Channel in combination - 4-wire VG - per mile			UNCVX	1L5XX	0.013										
		Interoffice Channel in combination - 4-wire VG - Facility Termination			UNCVX	U1TV4	19.81	72.60	41.75								
		Interoffice Channel in combination - 4-wire 56 kbps - per mile			UNCDX	1L5XX	0.013										
		Interoffice Channel in combination - 4-wire 56 kbps - Facility Termination			UNCDX	U1TD5	15.61	72.60	41.75								
		Interoffice Channel in combination - 4-wire 64 kbps - per mile			UNCDX	1L5XX	0.013										
		Interoffice Channel in combination - 4-wire 64 kbps - Facility Termination			UNCDX	U1TD6	15.61	72.60	41.75								
		Interoffice Channel in combination - DS1 - per mile			UNC1X	1L5XX	0.2652										
		Interoffice Channel in combination - DS1 Facility Termination			UNC1X	U1TF1	70.47	143.58	103.88								
		Interoffice Channel in combination - DS3 - per mile			UNC3X	1L5XX	6.04										
		Interoffice Channel in combination - DS3 - Facility Termination			UNC3X	U1TF3	850.45	296.68	121.16								
		Interoffice Channel in combination - STS-1 - per mile			UNCSX	1L5XX	6.04										
		Interoffice Channel in combination - STS-1 Facility Termination			UNCSX	U1TFS	830.19	296.68	121.16								
ADDITIONAL NETWORK ELEMENTS																	
	Optional Features & Functions:																
		Clear Channel Capability Extended Frame Option - per DS1	I		U1TD1, ULDD1,UNC1X	CCOEF		0.00	0.00	0.00	0.00						
		Clear Channel Capability Super FrameOption - per DS1	I		U1TD1, ULDD1,UNC1X	CCOSF		0.00	0.00	0.00	0.00						
		Clear Channel Capability (SF/ESF) Option - Subsequent Activity - per DS1	I		ULDD1, U1TD1, UNC1X, USL	NRCCC		184.65	23.79	1.97	0.77						
		C-bit Parity Option - Subsequent Activity - per DS3	i		U1TD3, ULDD3, UE3, UNC3X	NRCC3		218.78	7.66	0.7263	0.00						
		DS1/DS0 Channel System			UNC1X	MQ1	105.09	59.97	12.96								
		DS3/DS1Channel System			UNC3X, UNCSX	MQ3	201.48	107.05	48.07								

UNBUNDLED NETWORK ELEMENTS - Louisiana																	Att: 2 Exh: A
CATEGORY		RATE ELEMENTS	Interim	Zone	BCS	USOC	RATES($)					Svc Order Submitted Elec per LSR	Svc Order Submitted Manually per LSR	Incremental Charge - Manual Svc Order vs. Electronic-1st	Incremental Charge - Manual Svc Order vs. Electronic-Add'l	Incremental Charge - Manual Svc Order vs. Electronic-Disc 1st	Incremental Charge - Manual Svc Order vs. Electronic-Disc Add'l
							Rec	Nonrecurring		Nonrecurring Disconnect		OSS Rates($)					
								First	Add'l	First	Add'l	SOMEC	SOMAN	SOMAN	SOMAN	SOMAN	SOMAN
		Voice Grade COCI in combination			UNCVX	1D1VG	0.6497	5.91	4.26								
		Voice Grade COCI - for 2W-SL2 & 4W Voice Grade Local Loop			UEA	1D1VG	0.6497	5.91	4.26								
		Voice Grade COCI - for connection to a channelized DS1 Local Channel in the same SWC as collocation			U1TUC	1D1VG	0.6497	5.91	4.26								
		OCU-DP COCI (2.4-64kbs) in combination			UNCDX	1D1DD	1.38	5.91	4.26								
		OCU-DP COCI (2.4-64kbs) - for Unbundled Digital Loop			UDL	1D1DD	1.38	5.91	4.26								
		OCU-DP COCI (2.4-64kbs) - for connection to a channelized DS1 Local Channel in the same SWC as collocation			U1TUD	1D1DD	1.38	5.91	4.26								
		2-wire ISDN COCI (BRITE) in combination			UNCNX	UC1CA	2.96	6.39	4.58								
		2-wire ISDN COCI (BRITE) - for a Local Loop			UDN	UC1CA	2.96	6.39	4.58								
		2-wire ISDN COCI (BRITE) - for connection to a channelized DS1 Local Channel in the same SWC as collocation			U1TUB	UC1CA	2.96	6.39	4.58								
		DS1 COCI in combination			UNC1X	UC1D1	11.78	5.91	4.26								
		DS1 COCI - for Stand Alone Local Channel			ULDD1	UC1D1	11.78	5.91	4.26								
		DS1 COCI - for Stand Alone Interoffice Channel			U1TD1	UC1D1	11.78	5.91	4.26								
		DS1 COCI - for DS1 Local Loop			USL, NTCD1	UC1D1	11.78	5.91	4.26								
		DS1 COCI - for connection to a channelized DS1 Local Channel in the same SWC as collocation			U1TUA	UC1D1	11.78	5.91	4.26								
		Wholesale - UNE, Switch-As-Is Conversion Charge			UNCVX, UNCDX, UNC1X, UNC3X, UNCSX, UDFCX, XDH1X, HFQC6, XDD2X, XDV6X, XDDFX, XDD4X, HFRST, UNCNX	UNCCC		5.43	5.43								
		Unbundled Misc Rate Element, SNE SAI, Single Network Element - Switch As Is Non-recurring Charge, per circuit (LSR)	I		U1TVX, U1TDX, U1TD1, U1TD3, U1TS1, UDF, UE3	URESL		36.83	16.12								
		Unbundled Misc Rate Element, SNE SAI, Single Network Element - Switch As Is Non-recurring Charge, incremental charge per circuit on a spreadsheet	i		U1TVX, U1TDX, U1TD1, U1TD3, U1TS1, UDF, UE3	URESP		1.49	1.49								
	Access to DCS - Customer Reconfiguration (FlexServ)																
		Customer Reconfiguration Establishment						1.43									
		DS1 DCS Termination with DS0 Switching					19.58	24.81	19.09								
		DS1 DCS Termination with DS1 Switching					10.95	17.93	12.22								
		DS3 DCS Termination with DS1 Switching					149.41	24.81	19.09								
	Node (SynchroNet)																
		Node per month			UNCDX	UNCNT	15.43										
	Service Rearrangements																
		NRC - Change in Facility Assignment per circuit Service Rearrangement	I		U1TVX, U1TDX, U1TUC, U1TUD, U1TUB, ULDVX, ULDDX, UNCVX, UNCDX, UNC1X	URETD		100.93	42.98								
		NRC - Change in Facility Assignment per circuit Project Management (added to CFA per circuit if project managed)	I		U1TVX, U1TDX, U1TUC, U1TUD, U1TUB, ULDVX, ULDDX, UNCVX, UNCDX, UNC1X	URETB		3.67	3.67								
		NRC - Order Coordination Specific Time - Dedicated Transport	I		UNC1X, UNC3X	OCOSR		18.85	18.85								
COMMINGLING																	
		Commingling Authorization			UNCVX, UNCDX, UNC1X, UNC3X, UNCSX, U1TD1, U1TD3, U1TS1, UE3, UDLSX, U1TVX, U1TDX, U1TUB, ULDVX, ULDD1, ULDD3, ULDS1	CMGAU	0.00	0.00	0.00								
	Commingled (UNE part of single bandwidth circuit)																
		Commingled VG COCI			XDV2X	1D1VG	0.6497	5.91	4.26								
		Commingled Digital COCI			XDV6X	1D1DD	1.38	5.91	4.26								

UNBUNDLED NETWORK ELEMENTS - Louisiana																	Att: 2 Exh: A
CATEGORY		RATE ELEMENTS	Interim	Zone	BCS	USOC	RATES($)					Svc Order Submitted Elec per LSR	Svc Order Submitted Manually per LSR	Incremental Charge - Manual Svc Order vs. Electronic-1st	Incremental Charge - Manual Svc Order vs. Electronic-Add'l	Incremental Charge - Manual Svc Order vs. Electronic-Disc 1st	Incremental Charge - Manual Svc Order vs. Electronic-Disc Add'l
							Rec	Nonrecurring		Nonrecurring Disconnect		OSS Rates($)					
								First	Add'l	First	Add'l	SOMEC	SOMAN	SOMAN	SOMAN	SOMAN	SOMAN
		Commingled ISDN COCI			XDD4X	UC1CA	2.96	6.39	4.58								
		Commingled 2-wire VG Interoffice Channel			XDV2X	U1TV2	22.60	72.60	41.75								
		Commingled 4-wire VG Interoffice Channel			XDV6X	U1TV4	19.81	72.60	41.75								
		Commingled 56kbps Interoffice Channel			XDD4X	U1TD5	15.61	72.60	41.75								
		Commingled 64kbps Interoffice Channel			XDD4X	U1TD6	15.61	72.60	41.75								
		Commingled VG/DS0 Interoffice Channel Mileage			XDV2X, XDV6X, XDD4X	1L5XX	0.013										
		Commingled 2-wire Local Loop Zone 1		1	XDV2X	UEAL2	14.93	94.21	45.09								
		Commingled 2-wire Local Loop Zone 2		2	XDV2X	UEAL2	25.35	94.21	45.09								
		Commingled 2-wire Local Loop Zone 3		3	XDV2X	UEAL2	50.46	94.21	45.09								
		Commingled 4-wire Local Loop Zone 1		1	XDV6X	UEAL4	30.81	94.21	45.09								
		Commingled 4-wire Local Loop Zone 2		2	XDV6X	UEAL4	38.32	94.21	45.09								
		Commingled 4-wire Local Loop Zone 3		3	XDV6X	UEAL4	60.39	94.21	45.09								
		Commingled 56kbps Local Loop Zone 1		1	XDD4X	UDL56	30.99	94.21	45.09								
		Commingled 56kbps Local Loop Zone 2		2	XDD4X	UDL56	36.78	94.21	45.09								
		Commingled 56kbps Local Loop Zone 3		3	XDD4X	UDL56	38.92	94.21	45.09								
		Commingled 64kbps Local Loop Zone 1		1	XDD4X	UDL64	30.99	94.21	45.09								
		Commingled 64kbps Local Loop Zone 2		2	XDD4X	UDL64	36.78	94.21	45.09								
		Commingled 64kbps Local Loop Zone 3		3	XDD4X	UDL64	38.92	94.21	45.09								
		Commingled ISDN Local Loop Zone 1		1	XDD4X	U1L2X	22.09	94.21	45.09								
		Commingled ISDN Local Loop Zone 2		2	XDD4X	U1L2X	35.28	94.21	45.09								
		Commingled ISDN Local Loop Zone 3		3	XDD4X	U1L2X	65.18	94.21	45.09								
		Commingled DS1 COCI			XDH1X	UC1D1	11.78	5.91	4.26								
		Commingled DS1 Interoffice Channel			XDH1X	U1TF1	70.47	143.58	103.88								
		Commingled DS1 Interoffice Channel Mileage			XDH1X	1L5XX	0.2652										
		Commingled DS1/DS0 Channel System			XDH1X	MQ1	105.09	59.97	12.96								
		Commingled DS1 Local Loop Zone 1		1	XDH1X	USLXX	85.70	169.22	100.89								
		Commingled DS1 Local Loop Zone 2		2	XDH1X	USLXX	194.96	169.22	100.89								
		Commingled DS1 Local Loop Zone 3		3	XDH1X	USLXX	491.94	169.22	100.89								
		Commingled DS3 Local Loop			HFQC6	UE3PX	362.34	188.45	125.51								
		Commingled DS3/STS-1 Local Loop Mileage			HFQC6, HFRST	1L5ND	10.04										
		Commingled STS-1 Local Loop			HFRST	UDLS1	374.56	188.45	125.51								
		Commingled DS3/DS1 Channel System			HFQC6	MQ3	201.48	107.05	48.07								
		Commingled DS3 Interoffice Channel			HFQC6	U1TF3	850.45	296.68	121.16								
		Commingled DS3 Interoffice Channel Mileage			HFQC6	1L5XX	6.04										
		Commingled STS-1Interoffice Channel			HFRST	U1TFS	830.19	296.68	121.16								
		Commingled STS-1Interoffice Channel Mileage			HFRST	1L5XX	6.04										
		Commingled Dark Fiber - Interoffice Transport, Per Four Fiber Strands, Per Route Mile Or Fraction Thereof			HEQDL	1L5DF	25.28										
		Commingled Dark Fiber - Interoffice Transport, Per Four Fiber Strands, Per Route Mile Or Fraction Thereof			HEQDL	UDF14		620.60	133.88								
		UNE to Commingled Conversion Tracking			XDH1X, HFQC6	CMGUN	0.00	0.00	0.00	0.00	0.00						
		SPA to Commingled Conversion Tracking			XDH1X, HFQC6	CMGSP	0.00	0.00	0.00	0.00	0.00						
LNP Query Service																	
		LNP Charge Per query					0.0008559										
		LNP Service Establishment Manual						12.16									
		LNP Service Provisioning with Point Code Establishment						576.33	294.43								
911 PBX LOCATE																	
	911 PBX LOCATE DATABASE CAPABILITY																
		Service Establishment per CLEC per End User Account			9PBDC	9PBEU		1,819.00									
		Changes to TN Range or Customer Profile			9PBDC	9PBTN		181.99									
		Per Telephone Number (Monthly)			9PBDC	9PBMM	0.07										
		Change Company (Service Provider) ID			9PBDC	9PBPC		534.22									
		PBX Locate Service Support per CLEC (Monthlt)			9PBDC	9PBMR	178.58										
		Service Order Charge			9PBDC	9PBSC		15.20									
	911 PBX LOCATE TRANSPORT COMPONENT																
	See Att 3																
	Note: Rates displaying an "I" in Interim column are interim as a result of a Commission order.																

UNBUNDLED NETWORK ELEMENTS - Mississippi																	Att: 2 Exh: A
CATEGORY		RATE ELEMENTS	Interim	Zone	BCS	USOC	RATES($)					Svc Order Submitted Elec per LSR	Svc Order Submitted Manually per LSR	Incremental Charge - Manual Svc Order vs. Electronic-1st	Incremental Charge - Manual Svc Order vs. Electronic-Add'l	Incremental Charge - Manual Svc Order vs. Electronic-Disc 1st	Incremental Charge - Manual Svc Order vs. Electronic-Disc Add'l
							Rec	Nonrecurring		Nonrecurring Disconnect		OSS Rates($)					
								First	Add'l	First	Add'l	SOMEC	SOMAN	SOMAN	SOMAN	SOMAN	SOMAN
	The "Zone" shown in the sections for stand-alone loops or loops as part of a combination refers to Geographically Deaveraged UNE Zones. To view Geographically Deaveraged UNE Zone Designations by Central Office, refer to internet Website: http://www.interconnection.bellsouth.com/become_a_clec/html/interconnection.htm																
OPERATIONS SUPPORT SYSTEMS (OSS) - "REGIONAL RATES"																	
	NOTE: (1) CLEC should contact its contract negotiator if it prefers the "state specific" OSS charges as ordered by the State Commissions. The OSS charges currently contained in this rate exhibit are the AT&T "regional" service ordering charges. CLEC may elect either the state specific Commission ordered rates for the service ordering charges, or CLEC may elect the regional service ordering charge, however, CLEC can not obtain a mixture of the two regardless if CLEC has a interconnection contract established in each of the 9 states.																
	NOTE: (2) Any element that can be ordered electronically will be billed according to the SOMEC rate listed in this category. Please refer to AT&T's Local Ordering Handbook (LOH) to determine if a product can be ordered electronically. For those elements that cannot be ordered electronically at present per the LOH, the listed SOMEC rate in this category reflects the charge that would be billed to a CLEC once electronic ordering capabilities come on-line for that element. Otherwise, the manual ordering charge, SOMAN, will be applied to a CLECs bill when it submits an LSR to AT&T.																
		OSS - Electronic Service Order Charge, Per Local Service Request (LSR) - UNE Only				SOMEC		3.50	0.00	3.50	0.00						
		OSS - Manual Service Order Charge, Per Local Service Request (LSR) - UNE Only				SOMAN		15.75	0.00	1.97	0.00						
UNE SERVICE DATE ADVANCEMENT CHARGE																	
	NOTE: The Expedite charge will be maintained commensurate with BellSouth's FCC No.1 Tariff, Section 5 as applicable.																
		UNE Expedite Charge per Circuit or Line Assignable USOC, per Day			UAL, UEANL, UCL, UEF, UDF, UEQ, UDL, UENTW, UDN, UEA, UHL, ULC, USL, U1T12, U1T48, U1TD1, U1TD3, U1TDX, U1TO3, U1TS1, U1TVX, UC1BC, UC1BL, UC1CC, UC1CL, UC1DC, UC1DL, UC1EC, UC1EL, UC1FC, UC1FL, UC1GC, UC1GL, UC1HC, UC1HL, UDL12, UDL48, UDLO3, UDLSX, UE3, ULD12, ULD48, ULDD1, ULDD3, ULDDX, ULDO3, ULDS1, ULDVX, UNC1X, UNC3X, UNCDX, UNCNX, UNCSX, UNCVX, UNLD1, UNLD3, UXTD1, UXTD3, UXTS1, U1TUC, U1TUD, U1TUB, U1TUA,NTCVG, NTCUD, NTCD1	SDASP		200.00									
ORDER MODIFICATION CHARGE																	
		Order Modification Charge (OMC)						26.21	0.00	0.00	0.00						
		Order Modification Additional Dispatch Charge (OMCAD)						150.00	0.00	0.00	0.00						
UNBUNDLED EXCHANGE ACCESS LOOP																	
	2-WIRE ANALOG VOICE GRADE LOOP																
		2-Wire Analog Voice Grade Loop - Service Level 1- Zone 1		1	UEANL	UEAL2	12.03	37.92	17.55	23.48	5.25						
		2-Wire Analog Voice Grade Loop - Service Level 1- Zone 2		2	UEANL	UEAL2	16.87	37.92	17.55	23.48	5.25						
		2-Wire Analog Voice Grade Loop - Service Level 1- Zone 3		3	UEANL	UEAL2	25.68	37.92	17.55	23.48	5.25						
		2-Wire Analog Voice Grade Loop - Service Level 1-Zone 4		4	UEANL	UEAL2	43.85	37.92	17.55	23.48	5.25						
		2-Wire Analog Voice Grade Loop - Service Level 1- Zone 1		1	UEANL	UEASL	12.03	37.92	17.55	23.48	5.25						
		2-Wire Analog Voice Grade Loop - Service Level 1- Zone 2		2	UEANL	UEASL	16.87	37.92	17.55	23.48	5.25						
		2-Wire Analog Voice Grade Loop - Service Level 1- Zone 3		3	UEANL	UEASL	25.68	37.92	17.55	23.48	5.25						
		2-Wire Analog Voice Grade Loop - Service Level 1-Zone 4		4	UEANL	UEASL	43.85	37.92	17.55	23.48	5.25						
		Tag Loop at End User Premise			UEANL	URETL		8.92	0.88								
		Loop Testing - Basic 1st Half Hour			UEANL	URET1		34.36	0.00								
		Loop Testing - Basic Additional Half Hour			UEANL	URETA		19.97	19.97								
		Manual Order Coordination for UVL-SL1s (per loop)			UEANL	UEAMC		8.20	8.20								

UNBUNDLED NETWORK ELEMENTS - Mississippi																	Att: 2 Exh: A
CATEGORY		RATE ELEMENTS	Interim	Zone	BCS	USOC	RATES($)					Svc Order Submitted Elec per LSR	Svc Order Submitted Manually per LSR	Incremental Charge - Manual Svc Order vs. Electronic-1st	Incremental Charge - Manual Svc Order vs. Electronic-Add'l	Incremental Charge - Manual Svc Order vs. Electronic-Disc 1st	Incremental Charge - Manual Svc Order vs. Electronic-Disc Add'l
							Rec	Nonrecurring		Nonrecurring Disconnect		OSS Rates($)					
								First	Add'l	First	Add'l	SOMEC	SOMAN	SOMAN	SOMAN	SOMAN	SOMAN
		Order Coordination for Specified Conversion Time for UVL-SL1 (per LSR)			UEANL	OCOSL		18.19	18.19								
		Unbundled Non-Design Voice Loop, billing for AT&T providing make-up (Engineering Information - E.I.)			UEANL	UEANM		13.51	13.51								
		Unbundled Loop Service Rearrangement, change in loop facility, per circuit			UEANL	UREWO		15.75	8.92	23.48	5.25						
		Bulk Migration, per 2 Wire Voice Loop-SL1			UEANL	UREPN		37.92	17.55	23.48	5.25						
		Bulk Migration Order Coordination, per 2 Wire Voice Loop-SL1			UEANL	UREPM		8.20	8.20								
	2-WIRE Unbundled COPPER LOOP																
		2-Wire Unbundled Copper Loop - Non-Designed Zone 1	I	1	UEQ	UEQ2X	11.01	36.53	16.16	22.66	4.42						
		2 Wire Unbundled Copper Loop - Non-Designed - Zone 2	I	2	UEQ	UEQ2X	11.51	36.53	16.16	22.66	4.42						
		2 Wire Unbundled Copper Loop - Non-Designed - Zone 3	I	3	UEQ	UEQ2X	11.57	36.53	16.16	22.66	4.42						
		2 Wire Unbundled Copper Loop - Non-Designed - Zone 4	I	4	UEQ	UEQ2X	13.10	36.53	16.16	22.66	4.42						
		Tag Loop at End User Premise			UEQ	URETL		8.92	0.88								
		Loop Testing - Basic 1st Half Hour			UEQ	URET1		34.36	0.00								
		Loop Testing - Basic Additional Half Hour			UEQ	URETA		19.97	19.97								
		Manual Order Coordination 2 Wire Unbundled Copper Loop - Non-Designed (per loop)			UEQ	USBMC		8.20	8.20								
		Unbundled Copper Loop - Non-Design, billing for AT&T providing make-up (Engineering Information - E.I.)			UEQ	UEQMU		13.51	13.51								
		Unbundled Loop Service Rearrangement, change in loop facility, per circuit			UEQ	UREWO		14.24	7.42	22.66	4.42						
		Bulk Migration, per 2 Wire UCL-ND			UEQ	UREPN		36.53	16.16	22.66	4.42						
		Bulk Migration Order Coordination, per 2 Wire UCL-ND			UEQ	UREPM		8.20	8.20								
UNBUNDLED EXCHANGE ACCESS LOOP																	
	2-WIRE ANALOG VOICE GRADE LOOP																
		2-Wire Analog Voice Grade Loop - Service Level 2 w/Loop or Ground Start Signaling - Zone 1		1	UEA	UEAL2	13.89	105.96	68.28	52.82	10.37						
		2-Wire Analog Voice Grade Loop - Service Level 2 w/Loop or Ground Start Signaling - Zone 2		2	UEA	UEAL2	18.75	105.96	68.28	52.82	10.37						
		2-Wire Analog Voice Grade Loop - Service Level 2 w/Loop or Ground Start Signaling - Zone 3		3	UEA	UEAL2	27.55	105.96	68.28	52.82	10.37						
		2-Wire Analog Voice Grade Loop - Service Level 2 w/Loop or Ground Start Signaling - Zone 4		4	UEA	UEAL2	45.72	105.96	68.28	52.82	10.37						
		2-Wire Analog Voice Grade Loop - Service Level 2 w/Reverse Battery Signaling - Zone 1		1	UEA	UEAR2	13.89	105.96	68.28	52.82	10.37						
		2-Wire Analog Voice Grade Loop - Service Level 2 w/Reverse Battery Signaling - Zone 2		2	UEA	UEAR2	18.75	105.96	68.28	52.82	10.37						
		2-Wire Analog Voice Grade Loop - Service Level 2 w/Reverse Battery Signaling - Zone 3		3	UEA	UEAR2	27.55	105.96	68.28	52.82	10.37						
		2-Wire Analog Voice Grade Loop - Service Level 2 w/Reverse Battery Signaling - Zone 4		4	UEA	UEAR2	45.72	105.96	68.28	52.82	10.37						
		Switch-As-Is Conversion rate per UNE Loop, Single LSR, (per DS0)			UEA	URESL		25.01	3.53								
		Switch-As-Is Conversion rate per UNE Loop, Spreadsheet, (per DS0)			UEA	URESP		26.50	5.02								
		Unbundled Loop Service Rearrangement, change in loop facility, per circuit			UEA	UREWO		87.56	36.29								
		Loop Tagging - Service Level 2 (SL2)			UEA	URETL		11.19	1.10								
		Bulk Migration, per 2 Wire Voice Loop-SL2			UEA	UREPN		105.96	68.28								
		Bulk Migration Order Coordination, per 2 Wire Voice Loop-SL2			UEA	UREPM		0.00	0.00								
	4-WIRE ANALOG VOICE GRADE LOOP																
		4-Wire Analog Voice Grade Loop - Zone 1		1	UEA	UEAL4	27.47	132.27	94.59	60.68	14.64						
		4-Wire Analog Voice Grade Loop - Zone 2		2	UEA	UEAL4	38.26	132.27	94.59	60.68	14.64						
		4-Wire Analog Voice Grade Loop - Zone 3		3	UEA	UEAL4	50.03	132.27	94.59	60.68	14.64						
		4-Wire Analog Voice Grade Loop - Zone 4		4	UEA	UEAL4	50.03	132.27	94.59	60.68	14.64						
		Switch-As-Is Conversion rate per UNE Loop, Single LSR, (per DS0)			UEA	URESL		25.01	3.53								
		Switch-As-Is Conversion rate per UNE Loop, Spreadsheet, (per DS0)			UEA	URESP		26.50	5.02								
		Unbundled Loop Service Rearrangement, change in loop facility, per circuit			UEA	UREWO		87.56	36.29								
	2-WIRE ISDN DIGITAL GRADE LOOP																
		2-Wire ISDN Digital Grade Loop - Zone 1		1	UDN	U1L2X	21.01	117.61	79.92	52.82	10.37						

UNBUNDLED NETWORK ELEMENTS - Mississippi																	Att: 2 Exh: A
CATEGORY		RATE ELEMENTS	Interim	Zone	BCS	USOC	RATES($)					Svc Order Submitted Elec per LSR	Svc Order Submitted Manually per LSR	Incremental Charge - Manual Svc Order vs. Electronic-1st	Incremental Charge - Manual Svc Order vs. Electronic-Add'l	Incremental Charge - Manual Svc Order vs. Electronic-Disc 1st	Incremental Charge - Manual Svc Order vs. Electronic-Disc Add'l
							Rec	Nonrecurring		Nonrecurring Disconnect		OSS Rates($)					
								First	Add'l	First	Add'l	SOMEC	SOMAN	SOMAN	SOMAN	SOMAN	SOMAN
		2-Wire ISDN Digital Grade Loop - Zone 2		2	UDN	U1L2X	27.59	117.61	79.92	52.82	10.37						
		2-Wire ISDN Digital Grade Loop - Zone 3		3	UDN	U1L2X	37.34	117.61	79.92	52.82	10.37						
		2-Wire ISDN Digital Grade Loop - Zone 4		4	UDN	U1L2X	59.18	117.61	79.92	52.82	10.37						
		Unbundled Loop Service Rearrangement, change in loop facility, per circuit			UDN	UREWO		91.46	44.07								
	2-WIRE ASYMMETRICAL DIGITAL SUBSCRIBER LINE (ADSL) COMPATIBLE LOOP																
		2 Wire Unbundled ADSL Loop including manual service inquiry & facility reservation - Zone 1		1	UAL	UAL2X	11.11	121.27	70.81	50.38	7.93						
		2 Wire Unbundled ADSL Loop including manual service inquiry & facility reservation - Zone 2		2	UAL	UAL2X	11.47	121.27	70.81	50.38	7.93						
		2 Wire Unbundled ADSL Loop including manual service inquiry & facility reservation - Zone 3		3	UAL	UAL2X	11.74	121.27	70.81	50.38	7.93						
		2 Wire Unbundled ADSL Loop including manual service inquiry & facility reservation - Zone 4		4	UAL	UAL2X	12.69	121.27	70.81	50.38	7.93						
		2 Wire Unbundled ADSL Loop without manual service inquiry & facility reservaton - Zone 1		1	UAL	UAL2W	11.11	96.15	58.03	50.38	7.93						
		2 Wire Unbundled ADSL Loop without manual service inquiry & facility reservaton - Zone 2		2	UAL	UAL2W	11.47	96.15	58.03	50.38	7.93						
		2 Wire Unbundled ADSL Loop without manual service inquiry & facility reservaton - Zone 3		3	UAL	UAL2W	11.74	96.15	58.03	50.38	7.93						
		2 Wire Unbundled ADSL Loop without manual service inquiry & facility reservaton - Zone 4		4	UAL	UAL2W	12.69	96.15	58.03	50.38	7.93						
		Unbundled Loop Service Rearrangement, change in loop facility, per circuit			UAL	UREWO		86.04	40.33								
	2-WIRE HIGH BIT RATE DIGITAL SUBSCRIBER LINE (HDSL) COMPATIBLE LOOP																
		2 Wire Unbundled HDSL Loop including manual service inquiry & facility reservation - Zone 1		1	UHL	UHL2X	8.75	129.98	79.52	50.38	7.93						
		2 Wire Unbundled HDSL Loop including manual service inquiry & facility reservation - Zone 2		2	UHL	UHL2X	9.22	129.98	79.52	50.38	7.93						
		2 Wire Unbundled HDSL Loop including manual service inquiry & facility reservation - Zone 3		3	UHL	UHL2X	9.87	129.98	79.52	50.38	7.93						
		2 Wire Unbundled HDSL Loop including manual service inquiry & facility reservation - Zone 4		4	UHL	UHL2X	10.46	129.98	79.52	50.38	7.93						
		2 Wire Unbundled HDSL Loop without manual service inquiry and facility reservation - Zone 1		1	UHL	UHL2W	8.75	104.86	66.74	50.38	7.93						
		2 Wire Unbundled HDSL Loop without manual service inquiry and facility reservation - Zone 2		2	UHL	UHL2W	9.22	104.86	66.74	50.38	7.93						
		2 Wire Unbundled HDSL Loop without manual service inquiry and facility reservation - Zone 3		3	UHL	UHL2W	9.87	104.86	66.74	50.38	7.93						
		2 Wire Unbundled HDSL Loop without manual service inquiry and facility reservation - Zone 4		4	UHL	UHL2W	10.46	104.86	66.74	50.38	7.93						
		Unbundled Loop Service Rearrangement, change in loop facility, per circuit			UHL	UREWO		85.98	40.33								
	4-WIRE HIGH BIT RATE DIGITAL SUBSCRIBER LINE (HDSL) COMPATIBLE LOOP																
		4 Wire Unbundled HDSL Loop including manual service inquiry and facility reservation - Zone 1		1	UHL	UHL4X	13.78	158.74	108.28	56.72	10.68						
		4-Wire Unbundled HDSL Loop including manual service inquiry and facility reservation - Zone 2		2	UHL	UHL4X	13.43	158.74	108.28	56.72	10.68						
		4-Wire Unbundled HDSL Loop including manual service inquiry and facility reservation - Zone 3		3	UHL	UHL4X	15.59	158.74	108.28	56.72	10.68						
		4-Wire Unbundled HDSL Loop including manual service inquiry and facility reservation - Zone 4		4	UHL	UHL4X	14.46	158.74	108.28	56.72	10.68						
		4-Wire Unbundled HDSL Loop without manual service inquiry and facility reservation - Zone 1		1	UHL	UHL4W	13.78	133.62	95.50	56.72	10.68						
		4-Wire Unbundled HDSL Loop without manual service inquiry and facility reservation - Zone 2		2	UHL	UHL4W	13.43	133.62	95.50	56.72	10.68						
		4-Wire Unbundled HDSL Loop without manual service inquiry and facility reservation - Zone 3		3	UHL	UHL4W	15.59	133.62	95.50	56.72	10.68						
		4-Wire Unbundled HDSL Loop without manual service inquiry and facility reservation - Zone 4		4	UHL	UHL4W	14.46	133.62	95.50	56.72	10.68						
		Unbundled Loop Service Rearrangement, change in loop facility, per circuit			UHL	UREWO		85.98	40.33								
	4-WIRE DS1 DIGITAL LOOP																
		4-Wire DS1 Digital Loop - Zone 1		1	USL	USLXX	79.08	253.93	158.45	46.10	12.07						

CATEGORY	RATE ELEMENTS	Interim	Zone	BCS	USOC	RATES($)					Svc Order Submitted Elec per LSR	Svc Order Submitted Manually per LSR	Incremental Charge - Manual Svc Order vs. Electronic-1st	Incremental Charge - Manual Svc Order vs. Electronic-Add'l	Incremental Charge - Manual Svc Order vs. Electronic-Disc 1st	Incremental Charge - Manual Svc Order vs. Electronic-Disc Add'l
						Rec	Nonrecurring		Nonrecurring Disconnect		OSS Rates($)					
							First	Add'l	First	Add'l	SOMEC	SOMAN	SOMAN	SOMAN	SOMAN	SOMAN
	4-Wire DS1 Digital Loop - Zone 2		2	USL	USLXX	129.38	253.93	158.45	46.10	12.07						
	4-Wire DS1 Digital Loop - Zone 3		3	USL	USLXX	206.74	253.93	158.45	46.10	12.07						
	4-Wire DS1 Digital Loop - Zone 4		4	USL	USLXX	458.46	253.93	158.45	46.10	12.07						
	Switch-As-Is Conversion rate per UNE Loop, Single LSR, (per DS1)			USL	URESL		25.01	3.53								
	Switch-As-Is Conversion rate per UNE Loop, Spreadsheet, (per DS1)			USL	URESP		26.50	5.02								
	Unbundled Loop Service Rearrangement, change in loop facility, per circuit			USL	UREWO		100.90	42.96								
4-WIRE 19.2, 56 OR 64 KBPS DIGITAL GRADE LOOP																
	4 Wire Unbundled Digital Loop 2.4 Kbps-Zone 1		1	UDL	UDL2X	27.44	126.53	88.85	60.68	14.64						
	4 Wire Unbundled Digital Loop 2.4 Kbps - Zone 2		2	UDL	UDL2X	34.55	126.53	88.85	60.68	14.64						
	4 Wire Unbundled Digital Loop 2.4 Kbps - Zone 3		3	UDL	UDL2X	40.76	126.53	88.85	60.68	14.64						
	4 Wire Unbundled Digital Loop 2.4 Kbps - Zone 4		4	UDL	UDL2X	32.25	126.53	88.85	60.68	14.64						
	4 Wire Unbundled Digital Loop 4.8 Kbps - Zone 1		1	UDL	UDL4X	27.44	126.53	88.85	60.68	14.64						
	4 Wire Unbundled Digital Loop 4.8 Kbps - Zone 2		2	UDL	UDL4X	34.55	126.53	88.85	60.68	14.64						
	4 Wire Unbundled Digital Loop 4.8 Kbps - Zone 3		3	UDL	UDL4X	40.76	126.53	88.85	60.68	14.64						
	4 Wire Unbundled Digital Loop 4.8 Kbps - Zone 4		4	UDL	UDL4X	32.25	126.53	88.85	60.68	14.64						
	4 Wire Unbundled Digital Loop 9.6 Kbps - Zone 1		1	UDL	UDL9X	27.44	126.53	88.85	60.68	14.64						
	5 Wire Unbundled Digital Loop 9.6 Kbps - Zone 2		2	UDL	UDL9X	34.55	126.53	88.85	60.68	14.64						
	6 Wire Unbundled Digital Loop 9.6 Kbps - Zone 3		3	UDL	UDL9X	40.76	126.53	88.85	60.68	14.64						
	7 Wire Unbundled Digital Loop 9.6 Kbps - Zone 4		4	UDL	UDL9X	32.25	126.53	88.85	60.68	14.64						
	4 Wire Unbundled Digital 19.2 Kbps - Zone 1		1	UDL	UDL19	27.44	126.53	88.85	60.68	14.64						
	4 Wire Unbundled Digital 19.2 Kbps - Zone 2		2	UDL	UDL19	34.55	126.53	88.85	60.68	14.64						
	4 Wire Unbundled Digital 19.2 Kbps - Zone 3		3	UDL	UDL19	40.76	126.53	88.85	60.68	14.64						
	4 Wire Unbundled Digital 19.2 Kbps - Zone 4		4	UDL	UDL19	32.25	126.53	88.85	60.68	14.64						
	4 Wire Unbundled Digital Loop 56 Kbps - Zone 1		1	UDL	UDL56	27.44	126.53	88.85	60.68	14.64						
	4 Wire Unbundled Digital Loop 56 Kbps - Zone 2		2	UDL	UDL56	34.55	126.53	88.85	60.68	14.64						
	4 Wire Unbundled Digital Loop 56 Kbps - Zone 3		3	UDL	UDL56	40.76	126.53	88.85	60.68	14.64						
	4 Wire Unbundled Digital Loop 56 Kbps - Zone 4		4	UDL	UDL56	32.25	126.53	88.85	60.68	14.64						
	4 Wire Unbundled Digital Loop 64 Kbps - Zone 1		1	UDL	UDL64	27.44	126.53	88.85	60.68	14.64						
	4 Wire Unbundled Digital Loop 64 Kbps - Zone 2		2	UDL	UDL64	34.55	126.53	88.85	60.68	14.64						
	4 Wire Unbundled Digital Loop 64 Kbps - Zone 3		3	UDL	UDL64	40.76	126.53	88.85	60.68	14.64						
	4 Wire Unbundled Digital Loop 64 Kbps - Zone 4		4	UDL	UDL64	32.25	126.53	88.85	60.68	14.64						
	Switch-As-Is Conversion rate per UNE Loop, Single LSR, (per DS0)			UDL	URESL		25.01	3.53								
	Switch-As-Is Conversion rate per UNE Loop, Spreadsheet, (per DS0)			UDL	URESP		26.50	5.02								
	Unbundled Loop Service Rearrangement, change in loop facility, per circuit			UDL	UREWO		101.94	49.66								
2-WIRE Unbundled COPPER LOOP																
	2-Wire Unbundled Copper Loop-Designed including manual service inquiry & facility reservation - Zone 1		1	UCL	UCLPB	11.11	120.34	69.87	50.38	7.93						
	2-Wire Unbundled Copper Loop-Designed including manual service inquiry & facility reservation - Zone 2		2	UCL	UCLPB	11.47	120.34	69.87	50.38	7.93						
	2 Wire Unbundled Copper Loop-Designed including manual service inquiry & facility reservation - Zone 3		3	UCL	UCLPB	11.74	120.34	69.87	50.38	7.93						
	2 Wire Unbundled Copper Loop-Designed including manual service inquiry & facility reservation - Zone 4		4	UCL	UCLPB	12.69	120.34	69.87	50.38	7.93						
	2-Wire Unbundled Copper Loop-Designed without manual service inquiry and facility reservation - Zone 1		1	UCL	UCLPW	11.11	95.21	57.09	50.38	7.93						
	2-Wire Unbundled Copper Loop-Designed without manual service inquiry and facility reservation - Zone 2		2	UCL	UCLPW	11.47	95.21	57.09	50.38	7.93						
	2-Wire Unbundled Copper Loop-Designed without manual service inquiry and facility reservation - Zone 3		3	UCL	UCLPW	11.74	95.21	57.09	50.38	7.93						
	2-Wire Unbundled Copper Loop-Designed without manual service inquiry and facility reservation - Zone 4		4	UCL	UCLPW	12.69	95.21	57.09	50.38	7.93						
	Order Coordination for Unbundled Copper Loops (per loop)			UCL	UCLMC		8.20	8.20								
	Unbundled Loop Service Rearrangement, change in loop facility, per circuit			UCL	UREWO		95.21	42.40								
4-WIRE COPPER LOOP																
	4-Wire Copper Loop-Designed including manual service inquiry and facility reservation - Zone 1		1	UCL	UCL4S	17.30	144.68	94.22	56.72	10.68						

UNBUNDLED NETWORK ELEMENTS - Mississippi																	Att: 2 Exh: A
CATEGORY		RATE ELEMENTS	Interim	Zone	BCS	USOC	RATES($)					Svc Order Submitted Elec per LSR	Svc Order Submitted Manually per LSR	Incremental Charge - Manual Svc Order vs. Electronic-1st	Incremental Charge - Manual Svc Order vs. Electronic-Add'l	Incremental Charge - Manual Svc Order vs. Electronic-Disc 1st	Incremental Charge - Manual Svc Order vs. Electronic-Disc Add'l
							Rec	Nonrecurring		Nonrecurring Disconnect		OSS Rates($)					
								First	Add'l	First	Add'l	SOMEC	SOMAN	SOMAN	SOMAN	SOMAN	SOMAN
		4-Wire Copper Loop-Designed including manual service inquiry and facility reservation - Zone 2		2	UCL	UCL4S	18.84	144.68	94.22	56.72	10.68						
		4-Wire Copper Loop-Designed including manual service inquiry and facility reservation - Zone 3		3	UCL	UCL4S	21.33	144.68	94.22	56.72	10.68						
		4-Wire Copper Loop-Designed including manual service inquiry and facility reservation - Zone 4		4	UCL	UCL4S	21.33	144.68	94.22	56.72	10.68						
		4-Wire Copper Loop-Designed without manual service inquiry and facility reservation - Zone 1		1	UCL	UCL4W	17.30	119.56	81.44	56.72	10.68						
		4-Wire Copper Loop-Designed without manual service inquiry and facility reservation - Zone 2		2	UCL	UCL4W	18.84	119.56	81.44	56.72	10.68						
		4-Wire Copper Loop-Designed without manual service inquiry and facility reservation - Zone 3		3	UCL	UCL4W	21.33	119.56	81.44	56.72	10.68						
		4-Wire Copper Loop-Designed without manual service inquiry and facility reservation - Zone 4		4	UCL	UCL4W	21.33	119.56	81.44	56.72	10.68						
		Order Coordination for Unbundled Copper Loops (per loop)			UCL	UCLMC		8.20	8.20								
		Unbundled Loop Service Rearrangement, change in loop facility, per circuit			UCL	UREWO		95.21	42.40								
		Order Coordination for Specified Conversion Time (per LSR)			UEA, UDN, UAL, UHL, UDL, USL	OCOSL		18.19									
	Rearrangements																
		EEL to UNE-L Retermination, per 2 Wire Unbundled Voice Loop-SL2			UEA	UREEL		87.56	36.29								
		EEL to UNE-L Retermination, per 4 Wire Unbundled Voice Loop			UEA	UREEL		87.56	36.29								
		EEL to UNE-L Retermination, per 2 Wire ISDN Loop			UDN	UREEL		91.46	44.07								
		EEL to UNE-L Retermination, per 4 Wire Unbundled Digital Loop			UDL	UREEL		101.94	49.66								
		EEL to UNE-L Retermination, per 4 Wire Unbundled DS1 Loop			USL	UREEL		100.90	42.96								
UNE LOOP COMMINGLING																	
	2-WIRE ANALOG VOICE GRADE LOOP - COMMINGLING																
		2-Wire Analog Voice Grade Loop - Service Level 2 w/Loop or Ground Start Signaling - Zone 1		1	NTCVG	UEAL2	13.89	105.96	68.28	52.82	10.37						
		2-Wire Analog Voice Grade Loop - Service Level 2 w/Loop or Ground Start Signaling - Zone 2		2	NTCVG	UEAL2	18.75	105.96	68.28	52.82	10.37						
		2-Wire Analog Voice Grade Loop - Service Level 2 w/Loop or Ground Start Signaling - Zone 3		3	NTCVG	UEAL2	27.55	105.96	68.28	52.82	10.37						
		2-Wire Analog Voice Grade Loop - Service Level 2 w/Loop or Ground Start Signaling - Zone 4		4	NTCVG	UEAL2	45.72	105.96	68.28	52.82	10.37						
		2-Wire Analog Voice Grade Loop - Service Level 2 w/Reverse Battery Signaling - Zone 1		1	NTCVG	UEAR2	13.89	105.96	68.28	52.82	10.37						
		2-Wire Analog Voice Grade Loop - Service Level 2 w/Reverse Battery Signaling - Zone 2		2	NTCVG	UEAR2	18.75	105.96	68.28	52.82	10.37						
		2-Wire Analog Voice Grade Loop - Service Level 2 w/Reverse Battery Signaling - Zone 3		3	NTCVG	UEAR2	27.55	105.96	68.28	52.82	10.37						
		2-Wire Analog Voice Grade Loop - Service Level 2 w/Reverse Battery Signaling - Zone 4		4	NTCVG	UEAR2	45.72	105.96	68.28	52.82	10.37						
		Switch-As-Is Conversion rate per UNE Loop, Single LSR, (per DS0)			NTCVG	URESL		25.01	3.53								
		Switch-As-Is Conversion rate per UNE Loop, Spreadsheet, (per DS0)			NTCVG	URESP		26.50	5.02								
		Unbundled Loop Service Rearrangement, change in loop facility, per circuit			NTCVG	UREWO		87.56	36.29								
		Loop Tagging - Service Level 2 (SL2)			NTCVG	URETL		11.19	1.10								
					NTCVG												
	4-WIRE ANALOG VOICE GRADE LOOP - COMMINGLING																
		4-Wire Analog Voice Grade Loop - Zone 1		1	NTCVG	UEAL4	27.47	132.27	94.59	60.68	14.64						
		4-Wire Analog Voice Grade Loop - Zone 2		2	NTCVG	UEAL4	38.26	132.27	94.59	60.68	14.64						
		4-Wire Analog Voice Grade Loop - Zone 3		3	NTCVG	UEAL4	50.03	132.27	94.59	60.68	14.64						
		4-Wire Analog Voice Grade Loop - Zone 4		4	NTCVG	UEAL4	50.03	132.27	94.59	60.68	14.64						
		Switch-As-Is Conversion rate per UNE Loop, Single LSR, (per DS0)			NTCVG	URESL		25.01	3.53								
		Switch-As-Is Conversion rate per UNE Loop, Spreadsheet, (per DS0)			NTCVG	URESP		26.50	5.02								

CATEGORY	RATE ELEMENTS	Interim	Zone	BCS	USOC	RATES($)					Svc Order Submitted Elec per LSR	Svc Order Submitted Manually per LSR	Incremental Charge - Manual Svc Order vs. Electronic-1st	Incremental Charge - Manual Svc Order vs. Electronic-Add'l	Incremental Charge - Manual Svc Order vs. Electronic-Disc 1st	Incremental Charge - Manual Svc Order vs. Electronic-Disc Add'l
						Rec	Nonrecurring		Nonrecurring Disconnect		OSS Rates($)					
							First	Add'l	First	Add'l	SOMEC	SOMAN	SOMAN	SOMAN	SOMAN	SOMAN
	Unbundled Loop Service Rearrangement, change in loop facility, per circuit			NTCVG	UREWO		87.56	36.29								
4-WIRE DS1 DIGITAL LOOP																
	4-Wire DS1 Digital Loop - Zone 1		1	NTCD1	USLXX	79.08	253.93	158.45	46.10	12.07						
	4-Wire DS1 Digital Loop - Zone 2		2	NTCD1	USLXX	129.38	253.93	158.45	46.10	12.07						
	4-Wire DS1 Digital Loop - Zone 3		3	NTCD1	USLXX	206.74	253.93	158.45	46.10	12.07						
	4-Wire DS1 Digital Loop - Zone 4		4	NTCD1	USLXX	458.46	253.93	158.45	46.10	12.07						
	Switch-As-Is Conversion rate per UNE Loop, Single LSR, (per DS1)			NTCD1	URESL		25.01	3.53								
	Switch-As-Is Conversion rate per UNE Loop, Spreadsheet, (per DS1)			NTCD1	URESP		26.50	5.02								
	Unbundled Loop Service Rearrangement, change in loop facility, per circuit			NTCD1	UREWO		100.90	42.96								
4-WIRE 19.2, 56 OR 64 KBPS DIGITAL GRADE LOOP																
	4 Wire Unbundled Digital Loop 2.4 Kbps-Zone 1		1	NTCUD	UDL2X	27.44	126.53	88.85	60.68	14.64						
	4 Wire Unbundled Digital Loop 2.4 Kbps - Zone 2		2	NTCUD	UDL2X	34.55	126.53	88.85	60.68	14.64						
	4 Wire Unbundled Digital Loop 2.4 Kbps - Zone 3		3	NTCUD	UDL2X	40.76	126.53	88.85	60.68	14.64						
	4 Wire Unbundled Digital Loop 2.4 Kbps - Zone 4		4	NTCUD	UDL2X	32.25	126.53	88.85	60.68	14.64						
	4 Wire Unbundled Digital Loop 4.8 Kbps - Zone 1		1	NTCUD	UDL4X	27.44	126.53	88.85	60.68	14.64						
	4 Wire Unbundled Digital Loop 4.8 Kbps - Zone 2		2	NTCUD	UDL4X	34.55	126.53	88.85	60.68	14.64						
	4 Wire Unbundled Digital Loop 4.8 Kbps - Zone 3		3	NTCUD	UDL4X	40.76	126.53	88.85	60.68	14.64						
	4 Wire Unbundled Digital Loop 4.8 Kbps - Zone 4		4	NTCUD	UDL4X	32.25	126.53	88.85	60.68	14.64						
	4 Wire Unbundled Digital Loop 9.6 Kbps - Zone 1		1	NTCUD	UDL9X	27.44	126.53	88.85	60.68	14.64						
	5 Wire Unbundled Digital Loop 9.6 Kbps - Zone 2		2	NTCUD	UDL9X	34.55	126.53	88.85	60.68	14.64						
	6 Wire Unbundled Digital Loop 9.6 Kbps - Zone 3		3	NTCUD	UDL9X	40.76	126.53	88.85	60.68	14.64						
	7 Wire Unbundled Digital Loop 9.6 Kbps - Zone 4		4	NTCUD	UDL9X	32.25	126.53	88.85	60.68	14.64						
	4 Wire Unbundled Digital 19.2 Kbps - Zone 1		1	NTCUD	UDL19	27.44	126.53	88.85	60.68	14.64						
	4 Wire Unbundled Digital 19.2 Kbps - Zone 2		2	NTCUD	UDL19	34.55	126.53	88.85	60.68	14.64						
	4 Wire Unbundled Digital 19.2 Kbps - Zone 3		3	NTCUD	UDL19	40.76	126.53	88.85	60.68	14.64						
	4 Wire Unbundled Digital 19.2 Kbps - Zone 4		4	NTCUD	UDL19	32.25	126.53	88.85	60.68	14.64						
	4 Wire Unbundled Digital Loop 56 Kbps - Zone 1		1	NTCUD	UDL56	27.44	126.53	88.85	60.68	14.64						
	4 Wire Unbundled Digital Loop 56 Kbps - Zone 2		2	NTCUD	UDL56	34.55	126.53	88.85	60.68	14.64						
	4 Wire Unbundled Digital Loop 56 Kbps - Zone 3		3	NTCUD	UDL56	40.76	126.53	88.85	60.68	14.64						
	4 Wire Unbundled Digital Loop 56 Kbps - Zone 4		4	NTCUD	UDL56	32.25	126.53	88.85	60.68	14.64						
	4 Wire Unbundled Digital Loop 64 Kbps - Zone 1		1	NTCUD	UDL64	27.44	126.53	88.85	60.68	14.64						
	4 Wire Unbundled Digital Loop 64 Kbps - Zone 2		2	NTCUD	UDL64	34.55	126.53	88.85	60.68	14.64						
	4 Wire Unbundled Digital Loop 64 Kbps - Zone 3		3	NTCUD	UDL64	40.76	126.53	88.85	60.68	14.64						
	4 Wire Unbundled Digital Loop 64 Kbps - Zone 4		4	NTCUD	UDL64	32.25	126.53	88.85	60.68	14.64						
	Switch-As-Is Conversion rate per UNE Loop, Single LSR, (per DS0)			NTCUD	URESL		25.01	3.53								
	Switch-As-Is Conversion rate per UNE Loop, Spreadsheet, (per DS0)			NTCUD	URESP		26.50	5.02								
	Unbundled Loop Service Rearrangement, change in loop facility, per circuit			NTCUD	UREWO		101.94	49.66								
	Order Coordination for Specified Conversion Time (per LSR)			NTCVG, NTCUD, NTCD1	OCOSL		18.19									
MAINTENANCE OF SERVICE																
	Maintenance of Service Charge, Basic Time, per half hour			UDC, UEA, UDL, UDN, USL, UAL, UHL, UCL, NTCVG, NTCUD, NTCD1, U1TD1, U1TD3, U1TDX, U1TS1, U1TVX, UDF, UDFCX, UDLSX, UE3, ULDD1, ULDD3, ULDDX, ULDS1, ULDVX, UNC1X, UNC3X, UNCDX, UNCSX, UNCVX, ULS	MVVBT		80.00	55.00								

UNBUNDLED NETWORK ELEMENTS - Mississippi																	Att: 2 Exh: A
CATEGORY		RATE ELEMENTS	Interim	Zone	BCS	USOC	RATES($)					Svc Order Submitted Elec per LSR	Svc Order Submitted Manually per LSR	Incremental Charge - Manual Svc Order vs. Electronic-1st	Incremental Charge - Manual Svc Order vs. Electronic-Add'l	Incremental Charge - Manual Svc Order vs. Electronic-Disc 1st	Incremental Charge - Manual Svc Order vs. Electronic-Disc Add'l
							Rec	Nonrecurring		Nonrecurring Disconnect		OSS Rates($)					
								First	Add'l	First	Add'l	SOMEC	SOMAN	SOMAN	SOMAN	SOMAN	SOMAN
		Maintenance of Service Charge, Overtime, per half hour			UDC, UEA, UDL, UDN, USL, UAL, UHL, UCL, NTCVG, NTCUD, NTCD1, U1TD1, U1TD3, U1TDX, U1TS1, U1TVX, UDF, UDFCX, UDLSX, UE3, ULDD1, ULDD3, ULDDX, ULDS1, ULDVX, UNC1X, UNC3X, UNCDX, UNCSX, UNCVX, ULS	MVVOT		90.00	65.00								
		Maintenance of Service Charge, Premium, per half hour			UDC, UEA, UDL, UDN, USL, UAL, UHL, UCL, NTCVG, NTCUD, NTCD1, U1TD1, U1TD3, U1TDX, U1TS1, U1TVX, UDF, UDFCX, UDLSX, UE3, ULDD1, ULDD3, ULDDX, ULDS1, ULDVX, UNC1X, UNC3X, UNCDX, UNCSX, UNCVX, ULS	MVVPT		100.00	75.00								
LOOP MODIFICATION																	
		Unbundled Loop Modification, Removal of Load Coils - 2 Wire pair less than or equal to 18k ft, per Unbundled Loop			UAL, UHL, UCL, UEQ, ULS, UEA, UEANL, UEPSR, UEPSB	ULM2L		32.57	32.57								
		Unbundled Loop Modification Removal of Load Coils - 4 Wire less than or equal to 18K ft, per Unbundled Loop			UHL, UCL, UEA	ULM4L		32.57	32.57								
		Unbundled Loop Modification Removal of Bridged Tap Removal, per unbundled loop			UAL, UHL, UCL, UEQ, ULS, UEA, UEANL, UEPSR, UEPSB	ULMBT		32.59	32.59								
SUB-LOOPS																	
	Sub-Loop Distribution																
		Sub-Loop - Per Cross Box Location - CLEC Feeder Facility Set-Up	I		UEANL, UEF	USBSA		259.69									
		Sub-Loop - Per Cross Box Location - Per 25 Pair Panel Set-Up	I		UEANL, UEF	USBSB		22.77									
		Sub-Loop - Per Building Equipment Room - CLEC Feeder Facility Set-Up	I		UEANL	USBSC		178.47									
		Sub-Loop - Per Building Equipment Room - Per 25 Pair Panel Set-Up	I		UEANL	USBSD		56.39									
		Sub-Loop Distribution Per 2-Wire Analog Voice Grade Loop - Zone 1		1	UEANL	USBN2	7.15	66.18	31.14	45.36	6.71						
		Sub-Loop Distribution Per 2-Wire Analog Voice Grade Loop - Zone 2		2	UEANL	USBN2	9.51	66.18	31.14	45.36	6.71						
		Sub-Loop Distribution Per 2-Wire Analog Voice Grade Loop - Zone 3		3	UEANL	USBN2	12.45	66.18	31.14	45.36	6.71						
		Sub-Loop Distribution Per 2-Wire Analog Voice Grade Loop - Zone 4		4	UEANL	USBN2	18.26	66.18	31.14	45.36	6.71						
		Order Coordination for Unbundled Sub-Loops, per sub-loop pair			UEANL	USBMC		8.20	8.20								
		Sub-Loop Distribution Per 4-Wire Analog Voice Grade Loop - Zone 1		1	UEANL	USBN4	7.30	79.49	44.45	51.27	9.35						
		Sub-Loop Distribution Per 4-Wire Analog Voice Grade Loop - Zone 2		2	UEANL	USBN4	13.92	79.49	44.45	51.27	9.35						

UNBUNDLED NETWORK ELEMENTS - Mississippi																	Att: 2 Exh: A
CATEGORY		RATE ELEMENTS	Interim	Zone	BCS	USOC	RATES($)					Svc Order Submitted Elec per LSR	Svc Order Submitted Manually per LSR	Incremental Charge - Manual Svc Order vs. Electronic-1st	Incremental Charge - Manual Svc Order vs. Electronic-Add'l	Incremental Charge - Manual Svc Order vs. Electronic-Disc 1st	Incremental Charge - Manual Svc Order vs. Electronic-Disc Add'l
							Rec	Nonrecurring		Nonrecurring Disconnect		OSS Rates($)					
								First	Add'l	First	Add'l	SOMEC	SOMAN	SOMAN	SOMAN	SOMAN	SOMAN
		Sub-Loop Distribution Per 4-Wire Analog Voice Grade Loop - Zone 3		3	UEANL	USBN4	16.73	79.49	44.45	51.27	9.35						
		Sub-Loop Distribution Per 4-Wire Analog Voice Grade Loop - Zone 4		4	UEANL	USBN4	16.73	79.49	44.45	51.27	9.35						
		Order Coordination for Unbundled Sub-Loops, per sub-loop pair			UEANL	USBMC		8.20	8.20								
		Sub-Loop 2-Wire Intrabuilding Network Cable (INC)			UEANL	USBR2	2.29	53.32	18.28	45.36	6.71						
		Order Coordination for Unbundled Sub-Loops, per sub-loop pair			UEANL	USBMC		8.20	8.20								
		Sub-Loop 4-Wire Intrabuilding Network Cable (INC)			UEANL	USBR4	4.40	59.60	24.55	51.27	9.35						
		Order Coordination for Unbundled Sub-Loops, per sub-loop pair			UEANL	USBMC		8.20	8.20								
		Loop Testing - Basic 1st Half Hour			UEANL	URET1		34.36	0.00								
		Loop Testing - Basic Additional Half Hour			UEANL	URETA		19.97	19.97								
		2 Wire Copper Unbundled Sub-Loop Distribution - Zone 1		1	UEF	UCS2X	6.06	66.18	31.14	45.36	6.71						
		2 Wire Copper Unbundled Sub-Loop Distribution - Zone 2		2	UEF	UCS2X	7.09	66.18	31.14	45.36	6.71						
		2 Wire Copper Unbundled Sub-Loop Distribution - Zone 3		3	UEF	UCS2X	8.16	66.18	31.14	45.36	6.71						
		2 Wire Copper Unbundled Sub-Loop Distribution - Zone 4		4	UEF	UCS2X	9.90	66.18	31.14	45.36	6.71						
		Order Coordination for Unbundled Sub-Loops, per sub-loop pair			UEF	USBMC		8.20	8.20								
		4 Wire Copper Unbundled Sub-Loop Distribution - Zone 1		1	UEF	UCS4X	5.10	79.49	44.45	51.27	9.35						
		4 Wire Copper Unbundled Sub-Loop Distribution - Zone 2		2	UEF	UCS4X	9.11	79.49	44.45	51.27	9.35						
		4 Wire Copper Unbundled Sub-Loop Distribution - Zone 3		3	UEF	UCS4X	14.00	79.49	44.45	51.27	9.35						
		4 Wire Copper Unbundled Sub-Loop Distribution - Zone 4		4	UEF	UCS4X	14.00	79.49	44.45	51.27	9.35						
		Order Coordination for Unbundled Sub-Loops, per sub-loop pair			UEF	USBMC		8.20	8.20								
		Loop Tagging Service Level 1, Unbundled Copper Loop, Non-Designed and Distribution Subloops			UEF, UEANL	URETL		8.92	0.88								
		Loop Testing - Basic 1st Half Hour			UEF	URET1		34.36	0.00								
		Loop Testing - Basic Additional Half Hour			UEF	URETA		19.97	19.97								
	Unbundled Sub-Loop Modification																
		Unbundled Sub-Loop Modification - 2-W Copper Dist Load Coil/Equip Removal per 2-W PR			UEF	ULM2X		176.80	5.13								
		Unbundled Sub-loop Modification - 4-W Copper Dist Load Coil/Equip Removal per 4-W PR			UEF	ULM4X		176.80	5.13								
		Unbundled Loop Modification, Removal of Bridge Tap, per unbundled loop			UEF	ULMBT		279.81	6.15								
	Unbundled Network Terminating Wire (UNTW)																
		Unbundled Network Terminating Wire (UNTW) per Pair			UENTW	UENPP	0.3366	30.55									
	Network Interface Device (NID)																
		Network Interface Device (NID) - 1-2 lines			UENTW	UND12		43.84	28.90								
		Network Interface Device (NID) - 1-6 lines			UENTW	UND16		65.30	50.36								
		Network Interface Device Cross Connect - 2 W			UENTW	UNDC2		5.94	5.94								
		Network Interface Device Cross Connect - 4W			UENTW	UNDC4		5.94	5.94								
UNE OTHER, PROVISIONING ONLY - NO RATE																	
		Unbundled Contact Name, Provisioning Only - no rate			UAL, UCL, UDC, UDL, UDN, UEA, UHL, UEANL, UEF, UEQ, UENTW, NTCVG, NTCUD, NTCD1, USL	UNECN	0.00	0.00									
		Unbundled DS1 Loop - Superframe Format Option - no rate			USL, NTCD1	CCOSF		0.00									
		Unbundled DS1 Loop - Expanded Superframe Format option - no rate			USL, NTCD1	CCOEF		0.00									
		NID - Dispatch and Service Order for NID installation			UENTW	UNDBX	0.00	0.00									
		UNTW Circuit Establishment, Provisioning Only - No Rate			UENTW	UENCE	0.00	0.00									
LOOP MAKE-UP																	
		Loop Makeup - Preordering Without Reservation, per working or spare facility queried (Manual).			UMK	UMKLW		24.12	24.12								
		Loop Makeup - Preordering With Reservation, per spare facility queried (Manual).			UMK	UMKLP		25.58	25.58								
		Loop Makeup--With or Without Reservation, per working or spare facility queried (Mechanized)			UMK	UMKMQ		0.6652	0.6652								
LINE SPLITTING																	

UNBUNDLED NETWORK ELEMENTS - Mississippi														Att: 2 Exh: A			
CATEGORY	RATE ELEMENTS	Interim	Zone	BCS	USOC	RATES($)					Svc Order Submitted Elec per LSR	Svc Order Submitted Manually per LSR	Incremental Charge - Manual Svc Order vs. Electronic-1st	Incremental Charge - Manual Svc Order vs. Electronic-Add'l	Incremental Charge - Manual Svc Order vs. Electronic-Disc 1st	Incremental Charge - Manual Svc Order vs. Electronic-Disc Add'l
						Rec	Nonrecurring		Nonrecurring Disconnect		OSS Rates($)					
							First	Add'l	First	Add'l	SOMEC	SOMAN	SOMAN	SOMAN	SOMAN	SOMAN
	END USER ORDERING-CENTRAL OFFICE BASED															
	Line Splitting - per line activation DLEC owned splitter			UEPSR UEPSB	UREOS	0.61										
	Line Splitting - per line activation AT&T owned - physical			UEPSR UEPSB	UREBP	0.61	18.62	10.66	10.04	4.93						
	Line Splitting - per line activation AT&T owned - virtual			UEPSR UEPSB	UREBV	0.61	18.62	10.66	10.04	4.93						
	END USER ORDERING - REMOTE SITE LINE SPLITTING															
	Remote Site Shared Loop Line Activation for End Users - CLEC Owned Splitter			UEPSR UEPSB	URERS	0.61	56.96	23.05	7.19	7.19						
	Remote Site Shared Loop - Subsequent Activity - CLEC Owned Splitter			UEPSR UEPSB	URERA		53.94	21.40								
	UNBUNDLED EXCHANGE ACCESS LOOP															
	2-WIRE ANALOG VOICE GRADE LOOP															
	2 Wire Analog Voice Grade Loop-Service Level 1-Line Splitting-Zone 1		1	UEPSR UEPSB	UEALS	12.03	37.92	17.55	23.48	5.25						
	2 Wire Analog Voice Grade Loop-Service Level 1-Line Splitting-Zone 1		1	UEPSR UEPSB	UEABS	12.03	37.92	17.55	23.48	5.25						
	2 Wire Analog Voice Grade Loop- Service Level 1-Line Splitting-Zone 2		2	UEPSR UEPSB	UEALS	16.87	37.92	17.55	23.48	5.25						
	2 Wire Analog Voice Grade Loop- Service Level 1-Line Splitting-Zone 2		2	UEPSR UEPSB	UEABS	16.87	37.92	17.55	23.48	5.25						
	2 Wire Analog Voice Grade Loop-Service Level 1-Line Splitting-Zone 3		3	UEPSR UEPSB	UEALS	25.68	37.92	17.55	23.48	5.25						
	2 Wire Analog Voice Grade Loop-Service Level 1-Line Splitting-Zone 3		3	UEPSR UEPSB	UEABS	25.68	37.92	17.55	23.48	5.25						
	2 Wire Analog Voice Grade Loop-Service Level 1-Line Splitting-Zone 4		4	UEPSR UEPSB	UEALS	43.85	37.92	17.55	23.48	5.25						
	2 Wire Analog Voice Grade Loop-Service Level 1-Line Splitting-Zone 4		4	UEPSR UEPSB	UEABS	43.85	37.92	17.55	23.48	5.25						
	Remote Site 2 Wire Analog Voice Grade Loop -Service Level 1-Line Splitting - CLEC Owned Splitter - Zone 1		1	UEPSR UEPSB	UEARS	7.15	66.18	31.14	45.36	6.71						
	Remote Site 2 Wire Analog Voice Grade Loop -Service Level 1-Line Splitting - CLEC Owned Splitter - Zone 2		2	UEPSR UEPSB	UEARS	9.51	66.18	31.14	45.36	6.71						
	Remote Site 2 Wire Analog Voice Grade Loop -Service Level 1-Line Splitting - CLEC Owned Splitter - Zone 3		3	UEPSR UEPSB	UEARS	12.45	66.18	31.14	45.36	6.71						
	Remote Site 2 Wire Analog Voice Grade Loop -Service Level 1-Line Splitting - CLEC Owned Splitter - Zone 4		4	UEPSR UEPSB	UEARS	18.26	66.18	31.14	45.36	6.71						
	PHYSICAL COLLOCATION															
	Physical Collocation-2 Wire Cross Connects (Loop) for Line Splitting			UEPSR UEPSB	PE1LS	0.0288	12.37	11.87	6.04	5.45						
	VIRTUAL COLLOCATION															
	Virtual Collocation-2 Wire Cross Connects (Loop) for Line Splitting			UEPSR UEPSB	VE1LS	0.0268	12.37	11.87	6.04	5.45						
UNBUNDLED DEDICATED TRANSPORT																
	INTEROFFICE CHANNEL - DEDICATED TRANSPORT															
	Interoffice Channel - 2-Wire Voice Grade - per mile			U1TVX	1L5XX	0.0098										
	Interoffice Channel - 2-Wire Voice Grade - Facility Termination			U1TVX	U1TV2	22.52	40.77	27.57	17.26	7.11						
	Interoffice Channel - 2-Wire Voice Grade Rev Bat. - per mile			U1TVX	1L5XX	0.0098										
	Interoffice Channel - 2-Wire VG Rev Bat. - Facility Termination			U1TVX	U1TR2	22.52	40.77	27.57	17.26	7.11						
	Interoffice Channel - 4-Wire Voice Grade - per mile			U1TVX	1L5XX	0.0098										
	Interoffice Channel - 4- Wire Voice Grade - Facility Termination			U1TVX	U1TV4	19.79	40.77	27.57	17.26	7.11						
	Interoffice Channel - 56 kbps - per mile			U1TDX	1L5XX	0.0098										
	Interoffice Channel - 56 kbps - Facility Termination			U1TDX	U1TD5	15.68	40.77	27.57	17.26	7.11						
	Interoffice Channel - 64 kbps - per mile			U1TDX	1L5XX	0.0098										
	Interoffice Channel - 64 kbps - Facility Termination			U1TDX	U1TD6	15.68	40.77	27.57	17.26	7.11						
	Interoffice Channel - DS1 - per mile			U1TD1	1L5XX	0.201										
	Interoffice Channel - DS1 - Facility Termination			U1TD1	U1TF1	57.33	89.79	82.28	16.86	14.90						
	Interoffice Channel - DS3 - per mile			U1TD3	1L5XX	4.76										
	Interoffice Channel - DS3 - Facility Termination			U1TD3	U1TF3	641.90	280.37	163.70	62.08	60.29						
	Interoffice Channel - STS-1 - per mile			U1TS1	1L5XX	4.76										
	Interoffice Channel - STS-1 - Facility Termination			U1TS1	U1TFS	644.21	280.37	163.70	62.08	60.29						
	UNBUNDLED DARK FIBER															
	Dark Fiber - Interoffice Transport, Per Four Fiber Strands, Per Route Mile Or Fraction Thereof			UDF, UDFCX	1L5DF	28.27										

CATEGORY	RATE ELEMENTS	Interim	Zone	BCS	USOC	RATES($)					Svc Order Submitted Elec per LSR	Svc Order Submitted Manually per LSR	Incremental Charge - Manual Svc Order vs. Electronic-1st	Incremental Charge - Manual Svc Order vs. Electronic-Add'l	Incremental Charge - Manual Svc Order vs. Electronic-Disc 1st	Incremental Charge - Manual Svc Order vs. Electronic-Disc Add'l
						Rec	Nonrecurring		Nonrecurring Disconnect		OSS Rates($)					
							First	Add'l	First	Add'l	SOMEC	SOMAN	SOMAN	SOMAN	SOMAN	SOMAN
	Dark Fiber - Interoffice Transport, Per Four Fiber Strands, Per Route Mile Or Fraction Thereof			UDF, UDFCX	UDF14		642.79	138.67	326.97	203.85						
HIGH CAPACITY UNBUNDLED LOCAL LOOP																
	DS-3/STS-1 UNBUNDLED LOCAL LOOP - Stand Alone															
	DS3 Unbundled Local Loop - per mile			UE3	1L5ND	11.20										
	DS3 Unbundled Local Loop - Facility Termination			UE3	UE3PX	326.15	454.13	265.47	123.23	86.19						
	STS-1Unbundled Local Loop - per mile			UDLSX	1L5ND	11.20										
	STS-1 Unbundled Local Loop - Facility Termination			UDLSX	UDLS1	338.55	454.13	265.47	123.23	86.19						
ENHANCED EXTENDED LINK (EELs)																
	Network Elements Used in Combinations															
	2-Wire VG Loop (SL2) in Combination - Zone 1		1	UNCVX	UEAL2	13.89	105.96	68.28	52.82	10.37						
	2-Wire VG Loop (SL2) in Combination - Zone 2		2	UNCVX	UEAL2	18.75	105.96	68.28	52.82	10.37						
	2-Wire VG Loop (SL2) in Combination - Zone 3		3	UNCVX	UEAL2	27.55	105.96	68.28	52.82	10.37						
	2-Wire VG Loop (SL2) in Combination - Zone 4		4	UNCVX	UEAL2	45.72	105.96	68.28	52.82	10.37						
	4-Wire Analog Voice Grade Loop in Combination - Zone 1		1	UNCVX	UEAL4	27.47	132.27	94.59	60.68	14.64						
	4-Wire Analog Voice Grade Loop in Combination - Zone 2		2	UNCVX	UEAL4	38.26	132.27	94.59	60.68	14.64						
	4-Wire Analog Voice Grade Loop in Combination - Zone 3		3	UNCVX	UEAL4	50.03	132.27	94.59	60.68	14.64						
	4-Wire Analog Voice Grade Loop in Combination - Zone 4		4	UNCVX	UEAL4	50.03	132.27	94.59	60.68	14.64						
	2-Wire ISDN Loop in Combination - Zone 1		1	UNCNX	U1L2X	21.01	117.61	79.92	52.82	10.37						
	2-Wire ISDN Loop in Combination - Zone 2		2	UNCNX	U1L2X	27.59	117.61	79.92	52.82	10.37						
	2-Wire ISDN Loop in Combination - Zone 3		3	UNCNX	U1L2X	37.34	117.61	79.92	52.82	10.37						
	2-Wire ISDN Loop in Combination - Zone 4		4	UNCNX	U1L2X	59.18	117.61	79.92	52.82	10.37						
	4-Wire 56Kbps Digital Grade Loop in Combination - Zone 1		1	UNCDX	UDL56	27.44	126.53	88.85	60.68	14.64						
	4-Wire 56Kbps Digital Grade Loop in Combination - Zone 2		2	UNCDX	UDL56	34.55	126.53	88.85	60.68	14.64						
	4-Wire 56Kbps Digital Grade Loop in Combination - Zone 3		3	UNCDX	UDL56	40.76	126.53	88.85	60.68	14.64						
	4-Wire 56Kbps Digital Grade Loop in Combination - Zone 4		4	UNCDX	UDL56	32.25	126.53	88.85	60.68	14.64						
	4-Wire 64Kbps Digital Grade Loop in Combination - Zone 1		1	UNCDX	UDL64	27.44	126.53	88.85	60.68	14.64						
	4-Wire 64Kbps Digital Grade Loop in Combination - Zone 2		2	UNCDX	UDL64	34.55	126.53	88.85	60.68	14.64						
	4-Wire 64Kbps Digital Grade Loop in Combination - Zone 3		3	UNCDX	UDL64	40.76	126.53	88.85	60.68	14.64						
	4-Wire 64Kbps Digital Grade Loop in Combination - Zone 4		4	UNCDX	UDL64	32.25	126.53	88.85	60.68	14.64						
	4-Wire DS1 Digital Loop in Combination - Zone 1		1	UNC1X	USLXX	79.08	253.93	158.45	46.10	12.07						
	4-Wire DS1 Digital Loop in Combination - Zone 2		2	UNC1X	USLXX	129.38	253.93	158.45	46.10	12.07						
	4-Wire DS1 Digital Loop in Combination - Zone 3		3	UNC1X	USLXX	206.74	253.93	158.45	46.10	12.07						
	4-Wire DS1 Digital Loop in Combination - Zone 4		4	UNC1X	USLXX	458.46	253.93	158.45	46.10	12.07						
	DS3 Local Loop in combination - per mile			UNC3X	1L5ND	11.20										
	DS3 Local Loop in combination - Facility Termination			UNC3X	UE3PX	326.15	454.13	265.47	123.23	86.19						
	STS-1 Local Loop in combination - per mile			UNCSX	1L5ND	11.20										
	STS-1 Local Loop in combination - Facility Termination			UNCSX	UDLS1	338.55	454.13	265.47	123.23	86.19						
	Interoffice Channel in combination - 2-wire VG - per mile			UNCVX	1L5XX	0.0088										
	Interoffice Channel in combination - 2-wire VG - Facility Termination			UNCVX	U1TV2	20.32	40.77	27.57	17.26	7.11						
	Interoffice Channel in combination - 4-wire VG - per mile			UNCVX	1L5XX	0.0088										
	Interoffice Channel in combination - 4-wire VG - Facility Termination			UNCVX	U1TV4	17.86	40.77	27.57	17.26	7.11						
	Interoffice Channel in combination - 4-wire 56 kbps - per mile			UNCDX	1L5XX	0.0088										
	Interoffice Channel in combination - 4-wire 56 kbps - Facility Termination			UNCDX	U1TD5	14.14	40.77	27.57	17.26	7.11						
	Interoffice Channel in combination - 4-wire 64 kbps - per mile			UNCDX	1L5XX	0.0088										
	Interoffice Channel in combination - 4-wire 64 kbps - Facility Termination			UNCDX	U1TD6	14.14	40.77	27.57	17.26	7.11						
	Interoffice Channel in combination - DS1 - per mile			UNC1X	1L5XX	0.1813										
	Interoffice Channel in combination - DS1 Facility Termination			UNC1X	U1TF1	51.72	89.79	82.28	16.86	14.90						
	Interoffice Channel in combination - DS3 - per mile			UNC3X	1L5XX	4.29										
	Interoffice Channel in combination - DS3 - Facility Termination			UNC3X	U1TF3	579.12	280.37	163.70	62.08	60.29						
	Interoffice Channel in combination - STS-1 - per mile			UNCSX	1L5XX	4.29										
	Interoffice Channel in combination - STS-1 Facility Termination			UNCSX	U1TFS	581.21	280.37	163.70	62.08	60.29						
ADDITIONAL NETWORK ELEMENTS																
	Optional Features & Functions:															
	Clear Channel Capability Extended Frame Option - per DS1	I		U1TD1, ULDD1,UNC1X	CCOEF		0.00	0.00	0.00	0.00						
	Clear Channel Capability Super FrameOption - per DS1	I		U1TD1, ULDD1,UNC1X	CCOSF		0.00	0.00	0.00	0.00						
	Clear Channel Capability (SF/ESF) Option - Subsequent Activity - per DS1	I		ULDD1, U1TD1, UNC1X, USL	NRCCC		184.60	23.78	1.96	0.76						

UNBUNDLED NETWORK ELEMENTS - Mississippi																	Att: 2 Exh: A
CATEGORY		RATE ELEMENTS	Interim	Zone	BCS	USOC	RATES($)					Svc Order Submitted Elec per LSR	Svc Order Submitted Manually per LSR	Incremental Charge - Manual Svc Order vs. Electronic-1st	Incremental Charge - Manual Svc Order vs. Electronic-Add'l	Incremental Charge - Manual Svc Order vs. Electronic-Disc 1st	Incremental Charge - Manual Svc Order vs. Electronic-Disc Add'l
							Rec	Nonrecurring		Nonrecurring Disconnect		OSS Rates($)					
								First	Add'l	First	Add'l	SOMEC	SOMAN	SOMAN	SOMAN	SOMAN	SOMAN
		C-bit Parity Option - Subsequent Activity - per DS3	i		U1TD3, ULDD3, UE3, UNC3X	NRCC3		218.72	7.66	0.7201	0.00						
		DS1/DS0 Channel System			UNC1X	MQ1	102.85	91.57	62.94	10.87	10.10						
		DS3/DS1Channel System			UNC3X, UNCSX	MQ3	170.63	179.17	94.52	34.30	32.82						
		Voice Grade COCI in combination			UNCVX	1D1VG	0.5737	6.62	4.74								
		Voice Grade COCI - for 2W-SL2 & 4W Voice Grade Local Loop			UEA	1D1VG	0.5737	6.62	4.74								
		Voice Grade COCI - for connection to a channelized DS1 Local Channel in the same SWC as collocation			U1TUC	1D1VG	0.5737	6.62	4.74								
		OCU-DP COCI (2.4-64kbs) in combination			UNCDX	1D1DD	1.22	6.62	4.74								
		OCU-DP COCI (2.4-64kbs) - for Unbundled Digital Loop			UDL	1D1DD	1.22	6.62	4.74								
		OCU-DP COCI (2.4-64kbs) - for connection to a channelized DS1 Local Channel in the same SWC as collocation			U1TUD	1D1DD	1.22	6.62	4.74								
		2-wire ISDN COCI (BRITE) in combination			UNCNX	UC1CA	2.62	6.62	4.74								
		2-wire ISDN COCI (BRITE) - for a Local Loop			UDN	UC1CA	2.62	6.62	4.74								
		2-wire ISDN COCI (BRITE) - for connection to a channelized DS1 Local Channel in the same SWC as collocation			U1TUB	UC1CA	2.62	6.62	4.74								
		DS1 COCI in combination			UNC1X	UC1D1	12.96	6.62	4.74								
		DS1 COCI - for Stand Alone Local Channel			ULDD1	UC1D1	12.96	6.62	4.74								
		DS1 COCI - for Stand Alone Interoffice Channel			U1TD1	UC1D1	12.96	6.62	4.74								
		DS1 COCI - for DS1 Local Loop			USL, NTCD1	UC1D1	12.96	6.62	4.74								
		DS1 COCI - for connection to a channelized DS1 Local Channel in the same SWC as collocation			U1TUA	UC1D1	12.96	6.62	4.74								
		Wholesale - UNE, Switch-As-Is Conversion Charge			UNCVX, UNCDX, UNC1X, UNC3X, UNCSX, UDFCX, XDH1X, HFQC6, XDD2X, XDV6X, XDDFX, XDD4X, HFRST, UNCNX	UNCCC		5.63	5.63								
		Unbundled Misc Rate Element, SNE SAI, Single Network Element - Switch As Is Non-recurring Charge, per circuit (LSR)	I		U1TVX, U1TDX, U1TD1, U1TD3, U1TS1, UDF, UE3	URESL		36.87	16.14								
		Unbundled Misc Rate Element, SNE SAI, Single Network Element - Switch As Is Non-recurring Charge, incremental charge per circuit on a spreadsheet	I		U1TVX, U1TDX, U1TD1, U1TD3, U1TS1, UDF, UE3	URESP		1.49	1.49								
	Access to DCS - Customer Reconfiguration (FlexServ)																
		Customer Reconfiguration Establishment						1.49		1.90							
		DS1 DCS Termination with DS0 Switching					20.81	25.69	19.77	17.15	13.79						
		DS1 DCS Termination with DS1 Switching					10.73	18.57	12.65	12.60	9.24						
		DS3 DCS Termination with DS1 Switching					145.05	25.69	19.77	17.15	13.79						
	Node (SynchroNet)																
		Node per month			UNCDX	UNCNT											
	Service Rearrangements																
		NRC - Change in Facility Assignment per circuit Service Rearrangement	I		U1TVX, U1TDX, UEA, UDL, U1TUC, U1TUD, U1TUB, ULDVX, ULDDX, UNCVX, UNCDX, UNC1X	URETD		100.90	42.96								
		NRC - Change in Facility Assignment per circuit Project Management (added to CFA per circuit if project managed)	I		U1TVX, U1TDX, UEA, UDL, U1TUC, U1TUD, U1TUB, ULDVX, ULDDX, UNCVX, UNCDX, UNC1X	URETB		3.68	3.68								
		NRC - Order Coordination Specific Time - Dedicated Transport	I		UNC1X, UNC3X	OCOSR		18.87	18.87								
COMMINGLING																	

UNBUNDLED NETWORK ELEMENTS - Mississippi																	Att: 2 Exh: A
CATEGORY		RATE ELEMENTS	Interim	Zone	BCS	USOC	RATES($)					Svc Order Submitted Elec per LSR	Svc Order Submitted Manually per LSR	Incremental Charge - Manual Svc Order vs. Electronic-1st	Incremental Charge - Manual Svc Order vs. Electronic-Add'l	Incremental Charge - Manual Svc Order vs. Electronic-Disc 1st	Incremental Charge - Manual Svc Order vs. Electronic-Disc Add'l
							Rec	Nonrecurring		Nonrecurring Disconnect		OSS Rates($)					
								First	Add'l	First	Add'l	SOMEC	SOMAN	SOMAN	SOMAN	SOMAN	SOMAN
		Commingling Authorization			UNCVX, UNCDX, UNC1X, UNC3X, UNCSX, U1TD1, U1TD3, U1TS1, UE3, UDLSX, U1TVX, U1TDX, U1TUB, ULDVX, ULDD1, ULDD3, ULDS1	CMGAU	0.00	0.00	0.00	0.00	0.00						
	Commingled (UNE part of single bandwidth circuit)																
		Commingled VG COCI			XDV2X, NTCVG	1D1VG	0.5737	6.62	4.74								
		Commingled Digital COCI			XDV6X, NTCUD	1D1DD	1.22	6.62	4.74								
		Commingled ISDN COCI			XDD4X	UC1CA	2.62	6.62	4.74								
		Commingled 2-wire VG Interoffice Channel			XDV2X	U1TV2	22.52	40.77	27.57	17.26	7.11						
		Commingled 4-wire VG Interoffice Channel			XDV6X	U1TV4	19.79	40.77	27.57	17.26	7.11						
		Commingled 56kbps Interoffice Channel			XDD4X	U1TD5	15.68	40.77	27.57	17.26	7.11						
		Commingled 64kbps Interoffice Channel			XDD4X	U1TD6	15.68	40.77	27.57	17.26	7.11						
		Commingled VG/DS0 Interoffice Channel Mileage			XDV2X, XDV6X, XDD4X	1L5XX	0.0088										
		Commingled 2-wire Local Loop Zone 1		1	XDV2X	UEAL2	13.89	105.96	68.28	52.82	10.37						
		Commingled 2-wire Local Loop Zone 2		2	XDV2X	UEAL2	18.75	105.96	68.28	52.82	10.37						
		Commingled 2-wire Local Loop Zone 3		3	XDV2X	UEAL2	27.55	105.96	68.28	52.82	10.37						
		Commingled 2-wire Local Loop Zone 4		4	XDV2X	UEAL2	45.72	105.96	68.28	52.82	10.37						
		Commingled 4-wire Local Loop Zone 1		1	XDV6X	UEAL4	27.47	132.27	94.59	60.68	14.64						
		Commingled 4-wire Local Loop Zone 2		2	XDV6X	UEAL4	38.26	132.27	94.59	60.68	14.64						
		Commingled 4-wire Local Loop Zone 3		3	XDV6X	UEAL4	50.03	132.27	94.59	60.68	14.64						
		Commingled 4-wire Local Loop Zone 4		4	XDV6X	UEAL4	50.03	132.27	94.59	60.68	14.64						
		Commingled 56kbps Local Loop Zone 1		1	XDD4X	UDL56	27.44	126.53	88.85	60.68	14.64						
		Commingled 56kbps Local Loop Zone 2		2	XDD4X	UDL56	34.55	126.53	88.85	60.68	14.64						
		Commingled 56kbps Local Loop Zone 3		3	XDD4X	UDL56	40.76	126.53	88.85	60.68	14.64						
		Commingled 56kbps Local Loop Zone 4		4	XDD4X	UDL56	32.25	126.53	88.85	60.68	14.64						
		Commingled 64kbps Local Loop Zone 1		1	XDD4X	UDL64	27.44	126.53	88.85	60.68	14.64						
		Commingled 64kbps Local Loop Zone 2		2	XDD4X	UDL64	34.55	126.53	88.85	60.68	14.64						
		Commingled 64kbps Local Loop Zone 3		3	XDD4X	UDL64	40.76	126.53	88.85	60.68	14.64						
		Commingled 64kbps Local Loop Zone 4		4	XDD4X	UDL64	32.25	126.53	88.85	60.68	14.64						
		Commingled ISDN Local Loop Zone 1		1	XDD4X	U1L2X	21.01	117.61	79.92	52.82	10.37						
		Commingled ISDN Local Loop Zone 2		2	XDD4X	U1L2X	27.59	117.61	79.92	52.82	10.37						
		Commingled ISDN Local Loop Zone 3		3	XDD4X	U1L2X	37.34	117.61	79.92	52.82	10.37						
		Commingled ISDN Local Loop Zone 4		4	XDD4X	U1L2X	59.18	117.61	79.92	52.82	10.37						
		Commingled DS1 COCI			XDH1X, NTCD1	UC1D1	12.96	6.62	4.74								
		Commingled DS1 Interoffice Channel			XDH1X	U1TF1	57.33	89.79	82.28	16.86	14.90						
		Commingled DS1 Interoffice Channel Mileage			XDH1X	1L5XX	0.1813										
		Commingled DS1/DS0 Channel System			XDH1X	MQ1	102.85	91.57	62.94	10.87	10.10						
		Commingled DS1 Local Loop Zone 1		1	XDH1X	USLXX	79.08	253.93	158.45	46.10	12.07						
		Commingled DS1 Local Loop Zone 2		2	XDH1X	USLXX	129.38	253.93	158.45	46.10	12.07						
		Commingled DS1 Local Loop Zone 3		3	XDH1X	USLXX	206.74	253.93	158.45	46.10	12.07						
		Commingled DS1 Local Loop Zone 4		4	XDH1X	USLXX	458.46	253.93	158.45	46.10	12.07						
		Commingled DS3 Local Loop			HFQC6	UE3PX	326.15	454.13	265.47	123.23	86.19						
		Commingled DS3/STS-1 Local Loop Mileage			HFQC6, HFRST	1L5ND	11.20										
		Commingled STS-1 Local Loop			HFRST	UDLS1	338.55	454.13	265.47	123.23	86.19						
		Commingled DS3/DS1 Channel System			HFQC6	MQ3	170.63	179.17	94.52	34.30	32.82						
		Commingled DS3 Interoffice Channel			HFQC6	U1TF3	641.90	280.37	163.70	62.08	60.29						
		Commingled DS3 Interoffice Channel Mileage			HFQC6	1L5XX	4.29										
		Commingled STS-1Interoffice Channel			HFRST	U1TFS	644.21	280.37	163.70	62.08	60.29						
		Commingled STS-1Interoffice Channel Mileage			HFRST	1L5XX	4.29										
		Commingled Dark Fiber - Interoffice Transport, Per Four Fiber Strands, Per Route Mile Or Fraction Thereof			HEQDL	1L5DF	28.27										
		Commingled Dark Fiber - Interoffice Transport, Per Four Fiber Strands, Per Route Mile Or Fraction Thereof			HEQDL	UDF14		642.79	138.67	326.97	203.85						
		UNE to Commingled Conversion Tracking			XDH1X, HFQC6	CMGUN	0.00	0.00	0.00	0.00	0.00						
		SPA to Commingled Conversion Tracking			XDH1X, HFQC6	CMGSP	0.00	0.00	0.00	0.00	0.00						
LNP Query Service																	
		LNP Charge Per query					0.0008477										
		LNP Service Establishment Manual						12.59	12.59	11.58	11.58						

UNBUNDLED NETWORK ELEMENTS - Mississippi																	Att: 2 Exh: A
CATEGORY		RATE ELEMENTS	Interim	Zone	BCS	USOC	RATES($)					Svc Order Submitted Elec per LSR	Svc Order Submitted Manually per LSR	Incremental Charge - Manual Svc Order vs. Electronic-1st	Incremental Charge - Manual Svc Order vs. Electronic-Add'l	Incremental Charge - Manual Svc Order vs. Electronic-Disc 1st	Incremental Charge - Manual Svc Order vs. Electronic-Disc Add'l
							Rec	Nonrecurring		Nonrecurring Disconnect		OSS Rates($)					
								First	Add'l	First	Add'l	SOMEC	SOMAN	SOMAN	SOMAN	SOMAN	SOMAN
		LNP Service Provisioning with Point Code Establishment						596.94	304.96	270.49	198.89						
911 PBX LOCATE																	
	911 PBX LOCATE DATABASE CAPABILITY																
		Service Establishment per CLEC per End User Account			9PBDC	9PBEU		1,822.00									
		Changes to TN Range or Customer Profile			9PBDC	9PBTN		182.29									
		Per Telephone Number (Monthly)			9PBDC	9PBMM	0.07										
		Change Company (Service Provider) ID			9PBDC	9PBPC		535.11									
		PBX Locate Service Support per CLEC (Monthlt)			9PBDC	9PBMR	178.43										
		Service Order Charge			9PBDC	9PBSC		15.75									
	911 PBX LOCATE TRANSPORT COMPONENT																
	See Att 3																
	Note: Rates displaying an "I" in Interim column are interim as a result of a Commission order.																

UNBUNDLED NETWORK ELEMENTS - North Carolina																	Att: 2 Exh: A
CATEGORY		RATE ELEMENTS	Interim	Zone	BCS	USOC	RATES($)					Svc Order Submitted Elec per LSR	Svc Order Submitted Manually per LSR	Incremental Charge - Manual Svc Order vs. Electronic-1st	Incremental Charge - Manual Svc Order vs. Electronic-Add'l	Incremental Charge - Manual Svc Order vs. Electronic-Disc 1st	Incremental Charge - Manual Svc Order vs. Electronic-Disc Add'l
							Rec	Nonrecurring		Nonrecurring Disconnect		OSS Rates($)					
								First	Add'l	First	Add'l	SOMEC	SOMAN	SOMAN	SOMAN	SOMAN	SOMAN
	The "Zone" shown in the sections for stand-alone loops or loops as part of a combination refers to Geographically Deaveraged UNE Zones. To view Geographically Deaveraged UNE Zone Designations by Central Office, refer to internet Website: http://www.interconnection.bellsouth.com/become_a_clec/html/interconnection.htm																
OPERATIONS SUPPORT SYSTEMS (OSS) - "REGIONAL RATES"																	
	NOTE: (1) CLEC should contact its contract negotiator if it prefers the "state specific" OSS charges as ordered by the State Commissions. The OSS charges currently contained in this rate exhibit are the AT&T "regional" service ordering charges. CLEC may elect either the state specific Commission ordered rates for the service ordering charges, or CLEC may elect the regional service ordering charge, however, CLEC can not obtain a mixture of the two regardless if CLEC has a interconnection contract established in each of the 9 states.																
	NOTE: (2) Any element that can be ordered electronically will be billed according to the SOMEC rate listed in this category. Please refer to AT&T's Local Ordering Handbook (LOH) to determine if a product can be ordered electronically. For those elements that cannot be ordered electronically at present per the LOH, the listed SOMEC rate in this category reflects the charge that would be billed to a CLEC once electronic ordering capabilities come on-line for that element. Otherwise, the manual ordering charge, SOMAN, will be applied to a CLECs bill when it submits an LSR to AT&T.																
		OSS - Electronic Service Order Charge, Per Local Service Request (LSR) - UNE Only				SOMEC		3.50	0.00	3.50	0.00						
		OSS - Manual Service Order Charge, Per Local Service Request (LSR) - UNE Only				SOMAN		15.20	0.00	15.20	0.00						
UNE SERVICE DATE ADVANCEMENT CHARGE																	
	NOTE: The Expedite charge will be maintained commensurate with BellSouth's FCC No.1 Tariff, Section 5 as applicable.																
		UNE Expedite Charge per Circuit or Line Assignable USOC, per Day			UAL, UEANL, UCL, UEF, UDF, UEQ, UDL, UENTW, UDN, UEA, UHL, ULC, USL, U1T12, U1T48, U1TD1, U1TD3, U1TDX, U1TO3, U1TS1, U1TVX, UC1BC, UC1BL, UC1CC, UC1CL, UC1DC, UC1DL, UC1EC, UC1EL, UC1FC, UC1FL, UC1GC, UC1GL, UC1HC, UC1HL, UDL12, UDL48, UDLO3, UDLSX, UE3, ULD12, ULD48, ULDD1, ULDD3, ULDDX, ULDO3, ULDS1, ULDVX, UNC1X, UNC3X, UNCDX, UNCNX, UNCSX, UNCVX, UNLD1, UNLD3, UXTD1, UXTD3, UXTS1, U1TUC, U1TUD, U1TUB, U1TUA,NTCVG, NTCUD, NTCD1	SDASP		200.00									
ORDER MODIFICATION CHARGE																	
		Order Modification Charge (OMC)						26.21	0.00	0.00	0.00						
		Order Modification Additional Dispatch Charge (OMCAD)						0.00	0.00	0.00	0.00						
UNBUNDLED EXCHANGE ACCESS LOOP																	
	2-WIRE ANALOG VOICE GRADE LOOP																
		2-Wire Analog Voice Grade Loop - Service Level 1- Zone 1		1	UEANL	UEAL2	10.82	36.54	16.87								
		2-Wire Analog Voice Grade Loop - Service Level 1- Zone 2		2	UEANL	UEAL2	16.21	36.54	16.87								
		2-Wire Analog Voice Grade Loop - Service Level 1- Zone 3		3	UEANL	UEAL2	24.08	36.54	16.87								
		2-Wire Analog Voice Grade Loop - Service Level 1- Zone 1		1	UEANL	UEASL	10.82	36.54	16.87								
		2-Wire Analog Voice Grade Loop - Service Level 1- Zone 2		2	UEANL	UEASL	16.21	36.54	16.87								
		2-Wire Analog Voice Grade Loop - Service Level 1- Zone 3		3	UEANL	UEASL	24.08	36.54	16.87								
		Tag Loop at End User Premise			UEANL	URETL		8.93	0.88								
		Loop Testing - Basic 1st Half Hour			UEANL	URET1		33.17	0.00								
		Loop Testing - Basic Additional Half Hour			UEANL	URETA		19.28	19.28								
		Manual Order Coordination for UVL-SL1s (per loop)			UEANL	UEAMC		7.92	7.92								
		Order Coordination for Specified Conversion Time for UVL-SL1 (per LSR)			UEANL	OCOSL		17.56									

UNBUNDLED NETWORK ELEMENTS - North Carolina																	Att: 2 Exh: A
CATEGORY		RATE ELEMENTS	Interim	Zone	BCS	USOC	RATES($)					Svc Order Submitted Elec per LSR	Svc Order Submitted Manually per LSR	Incremental Charge - Manual Svc Order vs. Electronic-1st	Incremental Charge - Manual Svc Order vs. Electronic-Add'l	Incremental Charge - Manual Svc Order vs. Electronic-Disc 1st	Incremental Charge - Manual Svc Order vs. Electronic-Disc Add'l
							Rec	Nonrecurring		Nonrecurring Disconnect		OSS Rates($)					
								First	Add'l	First	Add'l	SOMEC	SOMAN	SOMAN	SOMAN	SOMAN	SOMAN
		Unbundled Non-Design Voice Loop, billing for AT&T providing make-up (Engineering Information - E.I.)			UEANL	UEANM		13.04	13.04								
		Unbundled Loop Service Rearrangement, change in loop facility, per circuit			UEANL	UREWO		15.74	8.92								
		Bulk Migration, per 2 Wire Voice Loop-SL1			UEANL	UREPN		36.54	16.87								
		Bulk Migration Order Coordination, per 2 Wire Voice Loop-SL1			UEANL	UREPM		7.92	7.92								
	2-WIRE Unbundled COPPER LOOP																
		2-Wire Unbundled Copper Loop - Non-Designed Zone 1		1	UEQ	UEQ2X	10.93	35.27	15.60								
		2 Wire Unbundled Copper Loop - Non-Designed - Zone 2		2	UEQ	UEQ2X	12.75	35.27	15.60								
		2 Wire Unbundled Copper Loop - Non-Designed - Zone 3		3	UEQ	UEQ2X	13.92	35.27	15.60								
		Tag Loop at End User Premise			UEQ	URETL		8.93	0.88								
		Loop Testing - Basic 1st Half Hour			UEQ	URET1		33.17	0.00								
		Loop Testing - Basic Additional Half Hour			UEQ	URETA		19.28	19.28								
		Manual Order Coordination 2 Wire Unbundled Copper Loop - Non-Designed (per loop)			UEQ	USBMC		7.92	7.92								
		Unbundled Copper Loop - Non-Design, billing for AT&T providing make-up (Engineering Information - E.I.)			UEQ	UEQMU		13.04	13.04								
		Unbundled Loop Service Rearrangement, change in loop facility, per circuit			UEQ	UREWO		14.23	7.41								
		Bulk Migration, per 2 Wire UCL-ND			UEQ	UREPN		35.27	15.60								
		Bulk Migration Order Coordination, per 2 Wire UCL-ND			UEQ	UREPM		7.92	7.92								
UNBUNDLED EXCHANGE ACCESS LOOP																	
	2-WIRE ANALOG VOICE GRADE LOOP																
		2-Wire Analog Voice Grade Loop - Service Level 2 w/Loop or Ground Start Signaling - Zone 1		1	UEA	UEAL2	11.96	102.10	65.72								
		2-Wire Analog Voice Grade Loop - Service Level 2 w/Loop or Ground Start Signaling - Zone 2		2	UEA	UEAL2	17.36	102.10	65.72								
		2-Wire Analog Voice Grade Loop - Service Level 2 w/Loop or Ground Start Signaling - Zone 3		3	UEA	UEAL2	25.23	102.10	65.72								
		2-Wire Analog Voice Grade Loop - Service Level 2 w/Reverse Battery Signaling - Zone 1		1	UEA	UEAR2	11.96	102.10	65.72								
		2-Wire Analog Voice Grade Loop - Service Level 2 w/Reverse Battery Signaling - Zone 2		2	UEA	UEAR2	17.36	102.10	65.72								
		2-Wire Analog Voice Grade Loop - Service Level 2 w/Reverse Battery Signaling - Zone 3		3	UEA	UEAR2	25.23	102.10	65.72								
		Switch-As-Is Conversion rate per UNE Loop, Single LSR, (per DS0)			UEA	URESL		25.03	3.53								
		Switch-As-Is Conversion rate per UNE Loop, Spreadsheet, (per DS0)			UEA	URESP		26.52	5.02								
		Unbundled Loop Service Rearrangement, change in loop facility, per circuit			UEA	UREWO		87.49	36.26								
		Loop Tagging - Service Level 2 (SL2)			UEA	URETL		11.20	1.10								
		Bulk Migration, per 2 Wire Voice Loop-SL2			UEA	UREPN		102.10	65.72								
		Bulk Migration Order Coordination, per 2 Wire Voice Loop-SL2			UEA	UREPM		0.00	0.00								
	4-WIRE ANALOG VOICE GRADE LOOP																
		4-Wire Analog Voice Grade Loop - Zone 1		1	UEA	UEAL4	19.52	127.40	91.02								
		4-Wire Analog Voice Grade Loop - Zone 2		2	UEA	UEAL4	24.74	127.40	91.02								
		4-Wire Analog Voice Grade Loop - Zone 3		3	UEA	UEAL4	46.11	127.40	91.02								
		Switch-As-Is Conversion rate per UNE Loop, Single LSR, (per DS0)			UEA	URESL		25.03	3.53								
		Switch-As-Is Conversion rate per UNE Loop, Spreadsheet, (per DS0)			UEA	URESP		26.52	5.02								
		Unbundled Loop Service Rearrangement, change in loop facility, per circuit			UEA	UREWO		87.49	36.26								
	2-WIRE ISDN DIGITAL GRADE LOOP																
		2-Wire ISDN Digital Grade Loop - Zone 1		1	UDN	U1L2X	19.78	113.34	76.96								
		2-Wire ISDN Digital Grade Loop - Zone 2		2	UDN	U1L2X	26.16	113.34	76.96								
		2-Wire ISDN Digital Grade Loop - Zone 3		3	UDN	U1L2X	35.37	113.34	76.96								
		Unbundled Loop Service Rearrangement, change in loop facility, per circuit			UDN	UREWO		91.39	44.04								
	2-WIRE ASYMMETRICAL DIGITAL SUBSCRIBER LINE (ADSL) COMPATIBLE LOOP																
		2 Wire Unbundled ADSL Loop including manual service inquiry & facility reservation - Zone 1		1	UAL	UAL2X	10.14	117.08	68.36								

UNBUNDLED NETWORK ELEMENTS - North Carolina																	Att: 2 Exh: A
CATEGORY		RATE ELEMENTS	Interim	Zone	BCS	USOC	RATES($)					Svc Order Submitted Elec per LSR	Svc Order Submitted Manually per LSR	Incremental Charge - Manual Svc Order vs. Electronic-1st	Incremental Charge - Manual Svc Order vs. Electronic-Add'l	Incremental Charge - Manual Svc Order vs. Electronic-Disc 1st	Incremental Charge - Manual Svc Order vs. Electronic-Disc Add'l
							Rec	Nonrecurring		Nonrecurring Disconnect		OSS Rates($)					
								First	Add'l	First	Add'l	SOMEC	SOMAN	SOMAN	SOMAN	SOMAN	SOMAN
		2 Wire Unbundled ADSL Loop including manual service inquiry & facility reservation - Zone 2		2	UAL	UAL2X	11.59	117.08	68.36								
		2 Wire Unbundled ADSL Loop including manual service inquiry & facility reservation - Zone 3		3	UAL	UAL2X	12.28	117.08	68.36								
		2 Wire Unbundled ADSL Loop without manual service inquiry & facility reservaton - Zone 1		1	UAL	UAL2W	10.14	92.83	56.02								
		2 Wire Unbundled ADSL Loop without manual service inquiry & facility reservaton - Zone 2		2	UAL	UAL2W	11.59	92.83	56.02								
		2 Wire Unbundled ADSL Loop without manual service inquiry & facility reservaton - Zone 3		3	UAL	UAL2W	12.28	92.83	56.02								
		Unbundled Loop Service Rearrangement, change in loop facility, per circuit			UAL	UREWO		78.06	32.38								
	2-WIRE HIGH BIT RATE DIGITAL SUBSCRIBER LINE (HDSL) COMPATIBLE LOOP																
		2 Wire Unbundled HDSL Loop including manual service inquiry & facility reservation - Zone 1		1	UHL	UHL2X	7.95	125.50	76.77								
		2 Wire Unbundled HDSL Loop including manual service inquiry & facility reservation - Zone 2		2	UHL	UHL2X	9.15	125.50	76.77								
		2 Wire Unbundled HDSL Loop including manual service inquiry & facility reservation - Zone 3		3	UHL	UHL2X	9.53	125.50	76.77								
		2 Wire Unbundled HDSL Loop without manual service inquiry and facility reservation - Zone 1		1	UHL	UHL2W	7.95	101.24	64.43								
		2 Wire Unbundled HDSL Loop without manual service inquiry and facility reservation - Zone 2		2	UHL	UHL2W	9.15	101.24	64.43								
		2 Wire Unbundled HDSL Loop without manual service inquiry and facility reservation - Zone 3		3	UHL	UHL2W	9.53	101.24	64.43								
		Unbundled Loop Service Rearrangement, change in loop facility, per circuit			UHL	UREWO		78.00	32.38								
	4-WIRE HIGH BIT RATE DIGITAL SUBSCRIBER LINE (HDSL) COMPATIBLE LOOP																
		4 Wire Unbundled HDSL Loop including manual service inquiry and facility reservation - Zone 1		1	UHL	UHL4X	11.01	153.26	104.54								
		4-Wire Unbundled HDSL Loop including manual service inquiry and facility reservation - Zone 2		2	UHL	UHL4X	12.20	153.26	104.54								
		4-Wire Unbundled HDSL Loop including manual service inquiry and facility reservation - Zone 3		3	UHL	UHL4X	13.49	153.26	104.54								
		4-Wire Unbundled HDSL Loop without manual service inquiry and facility reservation - Zone 1		1	UHL	UHL4W	11.01	129.00	92.20								
		4-Wire Unbundled HDSL Loop without manual service inquiry and facility reservation - Zone 2		2	UHL	UHL4W	12.20	129.00	92.20								
		4-Wire Unbundled HDSL Loop without manual service inquiry and facility reservation - Zone 3		3	UHL	UHL4W	13.49	129.00	92.20								
		Unbundled Loop Service Rearrangement, change in loop facility, per circuit			UHL	UREWO		78.00	32.38								
	4-WIRE DS1 DIGITAL LOOP																
		4-Wire DS1 Digital Loop - Zone 1		1	USL	USLXX	63.62	245.16	152.98								
		4-Wire DS1 Digital Loop - Zone 2		2	USL	USLXX	104.40	245.16	152.98								
		4-Wire DS1 Digital Loop - Zone 3		3	USL	USLXX	210.22	245.16	152.98								
		Switch-As-Is Conversion rate per UNE Loop, Single LSR, (per DS1)			USL	URESL		25.03	3.53								
		Switch-As-Is Conversion rate per UNE Loop, Spreadsheet, (per DS1)			USL	URESP		26.52	5.02								
		Unbundled Loop Service Rearrangement, change in loop facility, per circuit			USL	UREWO		100.82	42.93								
	4-WIRE 19.2, 56 OR 64 KBPS DIGITAL GRADE LOOP																
		4 Wire Unbundled Digital Loop 2.4 Kbps - Zone 1		1	UDL	UDL2X	21.98	121.86	85.48								
		4 Wire Unbundled Digital Loop 2.4 Kbps - Zone 2		2	UDL	UDL2X	27.58	121.86	85.48								
		4 Wire Unbundled Digital Loop 2.4 Kbps - Zone3		3	UDL	UDL2X	43.08	121.86	85.48								
		4 Wire Unbundled Digital Loop 4.8 Kbps -Zone 1		1	UDL	UDL4X	21.98	121.86	85.48								
		4 Wire Unbundled Digital Loop 4.8 Kbps - Zone 2		2	UDL	UDL4X	27.58	121.86	85.48								
		4 Wire Unbundled Digital Loop 4.8 Kbps - Zone 3		3	UDL	UDL4X	43.08	121.86	85.48								
		4 Wire Unbundled Digital Loop 9.6 Kbps - Zone 1		1	UDL	UDL9X	21.98	121.86	85.48								
		5 Wire Unbundled Digital Loop 9.6 Kbps - Zone 2		2	UDL	UDL9X	27.58	121.86	85.48								
		6 Wire Unbundled Digital Loop 9.6 Kbps - Zone 3		3	UDL	UDL9X	43.08	121.86	85.48								
		4 Wire Unbundled Digital 19.2 Kbps - Zone 1		1	UDL	UDL19	21.98	121.86	85.48								
		4 Wire Unbundled Digital 19.2 Kbps - Zone 2		2	UDL	UDL19	27.58	121.86	85.48								

UNBUNDLED NETWORK ELEMENTS - North Carolina																	Att: 2 Exh: A
CATEGORY		RATE ELEMENTS	Interim	Zone	BCS	USOC	RATES($)					Svc Order Submitted Elec per LSR	Svc Order Submitted Manually per LSR	Incremental Charge - Manual Svc Order vs. Electronic-1st	Incremental Charge - Manual Svc Order vs. Electronic-Add'l	Incremental Charge - Manual Svc Order vs. Electronic-Disc 1st	Incremental Charge - Manual Svc Order vs. Electronic-Disc Add'l
							Rec	Nonrecurring		Nonrecurring Disconnect		OSS Rates($)					
								First	Add'l	First	Add'l	SOMEC	SOMAN	SOMAN	SOMAN	SOMAN	SOMAN
		4 Wire Unbundled Digital 19.2 Kbps - Zone 3		3	UDL	UDL19	43.08	121.86	85.48								
		4 Wire Unbundled Digital Loop 56 Kbps - Zone 1		1	UDL	UDL56	21.98	121.86	85.48								
		4 Wire Unbundled Digital Loop 56 Kbps - Zone 2		2	UDL	UDL56	27.58	121.86	85.48								
		4 Wire Unbundled Digital Loop 56 Kbps - Zone 3		3	UDL	UDL56	43.08	121.86	85.48								
		4 Wire Unbundled Digital Loop 64 Kbps - Zone 1		1	UDL	UDL64	21.98	121.86	85.48								
		4 Wire Unbundled Digital Loop 64 Kbps - Zone 2		2	UDL	UDL64	27.58	121.86	85.48								
		4 Wire Unbundled Digital Loop 64 Kbps - Zone 3		3	UDL	UDL64	43.08	121.86	85.48								
		Switch-As-Is Conversion rate per UNE Loop, Single LSR, (per DS0)			UDL	URESL		25.03	3.53								
		Switch-As-Is Conversion rate per UNE Loop, Spreadsheet, (per DS0)			UDL	URESP		26.52	5.02								
		Unbundled Loop Service Rearrangement, change in loop facility, per circuit			UDL	UREWO		101.86	49.62								
	2-WIRE Unbundled COPPER LOOP																
		2-Wire Unbundled Copper Loop-Designed including manual service inquiry & facility reservation - Zone 1		1	UCL	UCLPB	10.14	116.18	67.46								
		2-Wire Unbundled Copper Loop-Designed including manual service inquiry & facility reservation - Zone 2		2	UCL	UCLPB	11.59	116.18	67.46								
		2 Wire Unbundled Copper Loop-Designed including manual service inquiry & facility reservation - Zone 3		3	UCL	UCLPB	12.28	116.18	67.46								
		2-Wire Unbundled Copper Loop-Designed without manual service inquiry and facility reservation - Zone 1		1	UCL	UCLPW	10.14	91.92	55.12								
		2-Wire Unbundled Copper Loop-Designed without manual service inquiry and facility reservation - Zone 2		2	UCL	UCLPW	11.59	91.92	55.12								
		2-Wire Unbundled Copper Loop-Designed without manual service inquiry and facility reservation - Zone 3		3	UCL	UCLPW	12.28	91.92	55.12								
		Order Coordination for Unbundled Copper Loops (per loop)			UCL	UCLMC		7.92	7.92								
		Unbundled Loop Service Rearrangement, change in loop facility, per circuit			UCL	UREWO		89.06	34.45								
	4-WIRE COPPER LOOP																
		4-Wire Copper Loop including manual service inquiry and facility reservation - Zone 1		1	UCL	UCL4S	13.10	139.69	90.96								
		4-Wire Copper Loop including manual service inquiry and facility reservation - Zone 2		2	UCL	UCL4S	15.17	139.69	90.96								
		4-Wire Copper Loop including manual service inquiry and facility reservation - Zone 3		3	UCL	UCL4S	17.03	139.69	90.96								
		4-Wire Copper Loop without manual service inquiry and facility reservation - Zone 1		1	UCL	UCL4W	13.10	115.43	78.63								
		4-Wire Copper Loop without manual service inquiry and facility reservation - Zone 2		2	UCL	UCL4W	15.17	115.43	78.63								
		4-Wire Copper Loop without manual service inquiry and facility reservation - Zone 3		3	UCL	UCL4W	17.03	115.43	78.63								
		Order Coordination for Unbundled Copper Loops (per loop)			UCL	UCLMC		7.92	7.92								
		Unbundled Loop Service Rearrangement, change in loop facility, per circuit			UCL	UREWO		89.06	34.45								
		Order Coordination for Specified Conversion Time (per LSR)			UEA, UDN, UAL, UHL, UDL, USL	OCOSL		17.56									
	Rearrangements																
		EEL to UNE-L Retermination, per 2 Wire Unbundled Voice Loop-SL2			UEA	UREEL		87.49	36.26								
		EEL to UNE-L Retermination, per 4 Wire Unbundled Voice Loop			UEA	UREEL		87.49	36.26								
		EEL to UNE-L Retermination, per 2 Wire ISDN Loop			UDN	UREEL		91.39	44.04								
		EEL to UNE-L Retermination, per 4 Wire Unbundled Digital Loop			UDL	UREEL		101.86	49.62								
		EEL to UNE-L Retermination, per 4 Wire Unbundled DS1 Loop			USL	UREEL		100.82	42.93								
UNE LOOP COMMINGLING																	
	2-WIRE ANALOG VOICE GRADE LOOP - COMMINGLING																
		2-Wire Analog Voice Grade Loop - Service Level 2 w/Loop or Ground Start Signaling - Zone 1		1	NTCVG	UEAL2	11.96	102.10	65.72								
		2-Wire Analog Voice Grade Loop - Service Level 2 w/Loop or Ground Start Signaling - Zone 2		2	NTCVG	UEAL2	17.36	102.10	65.72								
		2-Wire Analog Voice Grade Loop - Service Level 2 w/Loop or Ground Start Signaling - Zone 3		3	NTCVG	UEAL2	25.23	102.10	65.72								

UNBUNDLED NETWORK ELEMENTS - North Carolina																	Att: 2 Exh: A
CATEGORY		RATE ELEMENTS	Interim	Zone	BCS	USOC	RATES($)					Svc Order Submitted Elec per LSR	Svc Order Submitted Manually per LSR	Incremental Charge - Manual Svc Order vs. Electronic-1st	Incremental Charge - Manual Svc Order vs. Electronic-Add'l	Incremental Charge - Manual Svc Order vs. Electronic-Disc 1st	Incremental Charge - Manual Svc Order vs. Electronic-Disc Add'l
							Rec	Nonrecurring		Nonrecurring Disconnect		OSS Rates($)					
								First	Add'l	First	Add'l	SOMEC	SOMAN	SOMAN	SOMAN	SOMAN	SOMAN
		2-Wire Analog Voice Grade Loop - Service Level 2 w/Reverse Battery Signaling - Zone 1		1	NTCVG	UEAR2	11.96	102.10	65.72								
		2-Wire Analog Voice Grade Loop - Service Level 2 w/Reverse Battery Signaling - Zone 2		2	NTCVG	UEAR2	17.36	102.10	65.72								
		2-Wire Analog Voice Grade Loop - Service Level 2 w/Reverse Battery Signaling - Zone 3		3	NTCVG	UEAR2	25.23	102.10	65.72								
		Switch-As-Is Conversion rate per UNE Loop, Single LSR, (per DS0)			NTCVG	URESL		25.03	3.53								
		Switch-As-Is Conversion rate per UNE Loop, Spreadsheet, (per DS0)			NTCVG	URESP		26.52	5.02								
		Unbundled Loop Service Rearrangement, change in loop facility, per circuit			NTCVG	UREWO		87.49	36.26								
		Loop Tagging - Service Level 2 (SL2)			NTCVG	URETL		11.20	1.10								
	4-WIRE ANALOG VOICE GRADE LOOP -COMMINGLING																
		4-Wire Analog Voice Grade Loop - Zone 1		1	NTCVG	UEAL4	19.52	127.40	91.02								
		4-Wire Analog Voice Grade Loop - Zone 2		2	NTCVG	UEAL4	24.74	127.40	91.02								
		4-Wire Analog Voice Grade Loop - Zone 3		3	NTCVG	UEAL4	46.11	127.40	91.02								
		Switch-As-Is Conversion rate per UNE Loop, Single LSR, (per DS0)			NTCVG	URESL		25.03	3.53								
		Switch-As-Is Conversion rate per UNE Loop, Spreadsheet, (per DS0)			NTCVG	URESP		26.52	5.02								
		Unbundled Loop Service Rearrangement, change in loop facility, per circuit			NTCVG	UREWO		87.49	36.26								
	4-WIRE DS1 DIGITAL LOOP																
		4-Wire DS1 Digital Loop - Zone 1		1	NTCD1	USLXX	63.62	245.16	152.98								
		4-Wire DS1 Digital Loop - Zone 2		2	NTCD1	USLXX	104.40	245.16	152.98								
		4-Wire DS1 Digital Loop - Zone 3		3	NTCD1	USLXX	210.22	245.16	152.98								
		Switch-As-Is Conversion rate per UNE Loop, Single LSR, (per DS1)			NTCD1	URESL		25.03	3.53								
		Switch-As-Is Conversion rate per UNE Loop, Spreadsheet, (per DS1)			NTCD1	URESP		26.52	5.02								
		Unbundled Loop Service Rearrangement, change in loop facility, per circuit			NTCD1	UREWO		100.82	42.93								
	4-WIRE 19.2, 56 OR 64 KBPS DIGITAL GRADE LOOP																
		4 Wire Unbundled Digital Loop 2.4 Kbps - Zone 1		1	NTCUD	UDL2X	21.98	121.86	85.48								
		4 Wire Unbundled Digital Loop 2.4 Kbps - Zone 2		2	NTCUD	UDL2X	27.58	121.86	85.48								
		4 Wire Unbundled Digital Loop 2.4 Kbps - Zone3		3	NTCUD	UDL2X	43.08	121.86	85.48								
		4 Wire Unbundled Digital Loop 4.8 Kbps -Zone 1		1	NTCUD	UDL4X	21.98	121.86	85.48								
		4 Wire Unbundled Digital Loop 4.8 Kbps - Zone 2		2	NTCUD	UDL4X	27.58	121.86	85.48								
		4 Wire Unbundled Digital Loop 4.8 Kbps - Zone 3		3	NTCUD	UDL4X	43.08	121.86	85.48								
		4 Wire Unbundled Digital Loop 9.6 Kbps - Zone 1		1	NTCUD	UDL9X	21.98	121.86	85.48								
		5 Wire Unbundled Digital Loop 9.6 Kbps - Zone 2		2	NTCUD	UDL9X	27.58	121.86	85.48								
		6 Wire Unbundled Digital Loop 9.6 Kbps - Zone 3		3	NTCUD	UDL9X	43.08	121.86	85.48								
		4 Wire Unbundled Digital 19.2 Kbps - Zone 1		1	NTCUD	UDL19	21.98	121.86	85.48								
		4 Wire Unbundled Digital 19.2 Kbps - Zone 2		2	NTCUD	UDL19	27.58	121.86	85.48								
		4 Wire Unbundled Digital 19.2 Kbps - Zone 3		3	NTCUD	UDL19	43.08	121.86	85.48								
		4 Wire Unbundled Digital Loop 56 Kbps - Zone 1		1	NTCUD	UDL56	21.98	121.86	85.48								
		4 Wire Unbundled Digital Loop 56 Kbps - Zone 2		2	NTCUD	UDL56	27.58	121.86	85.48								
		4 Wire Unbundled Digital Loop 56 Kbps - Zone 3		3	NTCUD	UDL56	43.08	121.86	85.48								
		4 Wire Unbundled Digital Loop 64 Kbps - Zone 1		1	NTCUD	UDL64	21.98	121.86	85.48								
		4 Wire Unbundled Digital Loop 64 Kbps - Zone 2		2	NTCUD	UDL64	27.58	121.86	85.48								
		4 Wire Unbundled Digital Loop 64 Kbps - Zone 3		3	NTCUD	UDL64	43.08	121.86	85.48								
		Switch-As-Is Conversion rate per UNE Loop, Single LSR, (per DS0)			NTCUD	URESL		25.03	3.53								
		Switch-As-Is Conversion rate per UNE Loop, Spreadsheet, (per DS0)			NTCUD	URESP		26.52	5.02								
		Unbundled Loop Service Rearrangement, change in loop facility, per circuit			NTCUD	UREWO		101.86	49.62								
		Order Coordination for Specified Conversion Time (per LSR)			NTCVG, NTCUD, NTCD1	OCOSL		17.56									
MAINTENANCE OF SERVICE																	

UNBUNDLED NETWORK ELEMENTS - North Carolina																	Att: 2 Exh: A
CATEGORY		RATE ELEMENTS	Interim	Zone	BCS	USOC	RATES($)					Svc Order Submitted Elec per LSR	Svc Order Submitted Manually per LSR	Incremental Charge - Manual Svc Order vs. Electronic-1st	Incremental Charge - Manual Svc Order vs. Electronic-Add'l	Incremental Charge - Manual Svc Order vs. Electronic-Disc 1st	Incremental Charge - Manual Svc Order vs. Electronic-Disc Add'l
							Rec	Nonrecurring		Nonrecurring Disconnect		OSS Rates($)					
								First	Add'l	First	Add'l	SOMEC	SOMAN	SOMAN	SOMAN	SOMAN	SOMAN
		Maintenance of Service Charge, Basic Time, per half hour			UDC, UEA, UDL, UDN, USL, UAL, UHL, UCL, NTCVG, NTCUD, NTCD1, U1TD1, U1TD3, U1TDX, U1TS1, U1TVX, UDF, UDFCX, UDLSX, UE3, ULDD1, ULDD3, ULDDX, ULDS1, ULDVX, UNC1X, UNC3X, UNCDX, UNCSX, UNCVX, ULS	MVVBT		80.00	55.00								
		Maintenance of Service Charge, Overtime, per half hour			UDC, UEA, UDL, UDN, USL, UAL, UHL, UCL, NTCVG, NTCUD, NTCD1, U1TD1, U1TD3, U1TDX, U1TS1, U1TVX, UDF, UDFCX, UDLSX, UE3, ULDD1, ULDD3, ULDDX, ULDS1, ULDVX, UNC1X, UNC3X, UNCDX, UNCSX, UNCVX, ULS	MVVOT		90.00	65.00								
		Maintenance of Service Charge, Premium, per half hour			UDC, UEA, UDL, UDN, USL, UAL, UHL, UCL, NTCVG, NTCUD, NTCD1, U1TD1, U1TD3, U1TDX, U1TS1, U1TVX, UDF, UDFCX, UDLSX, UE3, ULDD1, ULDD3, ULDDX, ULDS1, ULDVX, UNC1X, UNC3X, UNCDX, UNCSX, UNCVX, ULS	MVVPT		100.00	75.00								
LOOP MODIFICATION																	
		Unbundled Loop Modification, Removal of Load Coils - 2 Wire pair less than or equal to 18k ft, per Unbundled Loop			UAL, UHL, UCL, UEQ, ULS, UEA, UEANL, UEPSR, UEPSB	ULM2L		0.00	0.00								
		Unbundled Loop Modification, Removal of Load Coils - 2 wire greater than 18k ft			UCL, ULS, UEQ	ULM2G		0.00	0.00								
		Unbundled Loop Modification Removal of Load Coils - 4 Wire less than or equal to 18K ft, per Unbundled Loop			UHL, UCL, UEA	ULM4L		0.00	0.00								
		Unbundled Loop Modification Removal of Load Coils - 4 Wire pair greater than 18k ft			UCL	ULM4G		0.00	0.00								
		Unbundled Loop Modification Removal of Bridged Tap Removal, per unbundled loop			UAL, UHL, UCL, UEQ, ULS, UEA, UEANL, UEPSR, UEPSB	ULMBT		12.15	12.15								
SUB-LOOPS																	
	Sub-Loop Distribution																
		Sub-Loop - Per Cross Box Location - CLEC Feeder Facility Set-Up			UEANL, UEF	USBSA		144.09									
		Sub-Loop - Per Cross Box Location - Per 25 Pair Panel Set-Up			UEANL, UEF	USBSB		10.99	10.99								

UNBUNDLED NETWORK ELEMENTS - North Carolina																	Att: 2 Exh: A
CATEGORY		RATE ELEMENTS	Interim	Zone	BCS	USOC	RATES($)					Svc Order Submitted Elec per LSR	Svc Order Submitted Manually per LSR	Incremental Charge - Manual Svc Order vs. Electronic-1st	Incremental Charge - Manual Svc Order vs. Electronic-Add'l	Incremental Charge - Manual Svc Order vs. Electronic-Disc 1st	Incremental Charge - Manual Svc Order vs. Electronic-Disc Add'l
							Rec	Nonrecurring		Nonrecurring Disconnect		OSS Rates($)					
								First	Add'l	First	Add'l	SOMEC	SOMAN	SOMAN	SOMAN	SOMAN	SOMAN
		Sub-Loop - Per Building Equipment Room - CLEC Feeder Facility Set-Up			UEANL	USBSC		86.16									
		Sub-Loop - Per Building Equipment Room - Per 25 Pair Panel Set-Up			UEANL	USBSD		27.13	27.13								
		Sub-Loop Distribution Per 2-Wire Analog Voice Grade Loop - Zone 1		1	UEANL	USBN2	6.70	63.89	30.06								
		Sub-Loop Distribution Per 2-Wire Analog Voice Grade Loop - Zone 2		2	UEANL	USBN2	9.93	63.89	30.06								
		Sub-Loop Distribution Per 2-Wire Analog Voice Grade Loop - Zone 3		3	UEANL	USBN2	12.79	63.89	30.06								
		Order Coordination for Unbundled Sub-Loops, per sub-loop pair			UEANL	USBMC		7.92	7.92								
		Sub-Loop Distribution Per 4-Wire Analog Voice Grade Loop - Zone 1		1	UEANL	USBN4	10.81	76.75	42.92								
		Sub-Loop Distribution Per 4-Wire Analog Voice Grade Loop - Zone 2		2	UEANL	USBN4	14.16	76.75	42.92								
		Sub-Loop Distribution Per 4-Wire Analog Voice Grade Loop - Zone 3		3	UEANL	USBN4	24.67	76.75	42.92								
		Order Coordination for Unbundled Sub-Loops, per sub-loop pair			UEANL	USBMC		7.92	7.92								
		Sub-Loop 2-Wire Intrabuilding Network Cable (INC)			UEANL	USBR2	2.34	51.48	17.65								
		Order Coordination for Unbundled Sub-Loops, per sub-loop pair			UEANL	USBMC		7.92	7.92								
		Sub-Loop 4-Wire Intrabuilding Network Cable (INC)			UEANL	USBR4	4.18	57.54	23.71								
		Order Coordination for Unbundled Sub-Loops, per sub-loop pair			UEANL	USBMC		7.92	7.92								
	Service Order charges will apply only once per sub-loop																
		Loop Testing - Basic 1st Half Hour			UEANL	URET1		33.17	0.00								
		Loop Testing - Basic Additional Half Hour			UEANL	URETA		19.28	19.28								
		2 Wire Copper Unbundled Sub-Loop Distribution - Zone 1		1	UEF	UCS2X	5.43	63.89	30.06								
		2 Wire Copper Unbundled Sub-Loop Distribution - Zone 2		2	UEF	UCS2X	8.04	63.89	30.06								
		2 Wire Copper Unbundled Sub-Loop Distribution - Zone 3		3	UEF	UCS2X	9.79	63.89	30.06								
		Order Coordination for Unbundled Sub-Loops, per sub-loop pair			UEF	USBMC		7.92	7.92								
		4 Wire Copper Unbundled Sub-Loop Distribution - Zone 1		1	UEF	UCS4X	6.34	76.75	42.92								
		4 Wire Copper Unbundled Sub-Loop Distribution - Zone 2		2	UEF	UCS4X	9.62	76.75	42.92								
		4 Wire Copper Unbundled Sub-Loop Distribution - Zone 3		3	UEF	UCS4X	13.04	76.75	42.92								
		Order Coordination for Unbundled Sub-Loops, per sub-loop pair			UEF	USBMC		7.92	7.92								
		Loop Tagging Service Level 1, Unbundled Copper Loop, Non-Designed and Distribution Subloops			UEF, UEANL	URETL		8.93	0.88								
		Loop Testing - Basic 1st Half Hour			UEF	URET1		33.17	0.00								
		Loop Testing - Basic Additional Half Hour			UEF	URETA		19.28	19.28								
	Unbundled Sub-Loop Modification																
		Unbundled Sub-Loop Modification - 2-W Copper Dist Load Coil/Equip Removal per 2-W PR			UEF	ULM2X		0.00	0.00								
		Unbundled Sub-loop Modification - 4-W Copper Dist Load Coil/Equip Removal per 4-W PR			UEF	ULM4X		0.00	0.00								
		Unbundled Loop Modification, Removal of Bridge Tap, per unbundled loop			UEF	ULMBT		224.55	4.29								
	Unbundled Network Terminating Wire (UNTW)																
		Unbundled Network Terminating Wire (UNTW) per Pair			UENTW	UENPP	0.51	14.72	14.72								
	Network Interface Device (NID)																
		Network Interface Device (NID) - 1-2 lines			UENTW	UND12		86.37	56.69								
		Network Interface Device (NID) - 1-6 lines			UENTW	UND16		127.93	98.21								
		Network Interface Device Cross Connect - 2 W			UENTW	UNDC2		5.73	5.73								
		Network Interface Device Cross Connect - 4W			UENTW	UNDC4		5.73	5.73								
UNE OTHER, PROVISIONING ONLY - NO RATE																	
		Unbundled Contact Name, Provisioning Only - no rate			UAL, UCL, UDC, UDL, UDN, UEA, UHL, UEANL, UEF, UEQ, UENTW, NTCVG, NTCUD, NTCD1, USL	UNECN	0.00	0.00									

UNBUNDLED NETWORK ELEMENTS - North Carolina

Att: 2 Exh: A

CATEGORY	RATE ELEMENTS	Interim	Zone	BCS	USOC	RATES($)					Svc Order Submitted Elec per LSR	Svc Order Submitted Manually per LSR	Incremental Charge - Manual Svc Order vs. Electronic-1st	Incremental Charge - Manual Svc Order vs. Electronic-Add'l	Incremental Charge - Manual Svc Order vs. Electronic-Disc 1st	Incremental Charge - Manual Svc Order vs. Electronic-Disc Add'l
						Rec	Nonrecurring		Nonrecurring Disconnect		OSS Rates($)					
							First	Add'l	First	Add'l	SOMEC	SOMAN	SOMAN	SOMAN	SOMAN	SOMAN
	Unbundled DS1 Loop - Superframe Format Option - no rate			USL, NTCD1	CCOSF		0.00									
	Unbundled DS1 Loop - Expanded Superframe Format option - no rate			USL, NTCD1	CCOEF		0.00									
	NID - Dispatch and Service Order for NID installation			UENTW	UNDBX	0.00	0.00									
	UNTW Circuit Establishment, Provisioning Only - No Rate			UENTW	UENCE	0.00	0.00									
LOOP MAKE-UP																
	Loop Makeup - Preordering Without Reservation, per working or spare facility queried (Manual).			UMK	UMKLW		23.29	23.29								
	Loop Makeup - Preordering With Reservation, per spare facility queried (Manual).			UMK	UMKLP		24.70	24.70								
	Loop Makeup--With or Without Reservation, per working or spare facility queried (Mechanized)			UMK	UMKMQ		0.19	0.19								
LINE SPLITTING																
END USER ORDERING-CENTRAL OFFICE BASED																
	Line Splitting - per line activation DLEC owned splitter			UEPSR UEPSB	UREOS	0.61	15.53	7.79								
	Line Splitting - per line activation AT&T owned - physical			UEPSR UEPSB	UREBP	0.6409	17.97	10.29								
	Line Splitting - per line activation AT&T owned - virtual			UEPSR UEPSB	UREBV	0.6325	17.87	10.29								
END USER ORDERING - REMOTE SITE LINE SPLITTING																
UNBUNDLED EXCHANGE ACCESS LOOP																
2-WIRE ANALOG VOICE GRADE LOOP																
	2 Wire Analog Voice Grade Loop-Service Level 1-Line Splitting-Zone 1		1	UEPSR UEPSB	UEALS	10.82	36.54	16.87	0.00	0.00						
	2 Wire Analog Voice Grade Loop-Service Level 1-Line Splitting-Zone 1		1	UEPSR UEPSB	UEABS	10.82	36.54	16.87	0.00	0.00						
	2 Wire Analog Voice Grade Loop- Service Level 1-Line Splitting-Zone 2		2	UEPSR UEPSB	UEALS	16.21	36.54	16.87	0.00	0.00						
	2 Wire Analog Voice Grade Loop- Service Level 1-Line Splitting-Zone 2		2	UEPSR UEPSB	UEABS	16.21	36.54	16.87	0.00	0.00						
	2 Wire Analog Voice Grade Loop-Service Level 1-Line Splitting-Zone 3		3	UEPSR UEPSB	UEALS	24.08	36.54	16.87	0.00	0.00						
	2 Wire Analog Voice Grade Loop-Service Level 1-Line Splitting-Zone 3		3	UEPSR UEPSB	UEABS	24.08	36.54	16.87	0.00	0.00						
PHYSICAL COLLOCATION																
	Physical Collocation-2 Wire Cross Connects (Loop) for Line Splitting			UEPSR UEPSB	PE1LS	0.0309	19.77	14.95	0.00	0.00						
VIRTUAL COLLOCATION																
	Virtual Collocation-2 Wire Cross Connects (Loop) for Line Splitting			UEPSR UEPSB	VE1LS	0.0287	33.96	32.08	0.00	0.00						
UNBUNDLED DEDICATED TRANSPORT																
INTEROFFICE CHANNEL - DEDICATED TRANSPORT																
	Interoffice Channel - 2-Wire Voice Grade - per mile			U1TVX	1L5XX	0.0095										
	Interoffice Channel - 2-Wire Voice Grade - Facility Termination			U1TVX	U1TV2	12.12	39.36	26.62								
	Interoffice Channel - 2-Wire Voice Grade Rev Bat. - per mile			U1TVX	1L5XX	0.0095										
	Interoffice Channel - 2-Wire VG Rev Bat. - Facility Termination			U1TVX	U1TR2	12.12	39.36	26.62								
	Interoffice Channel - 4-Wire Voice Grade - per mile			U1TVX	1L5XX	0.0095										
	Interoffice Channel - 4- Wire Voice Grade - Facility Termination			U1TVX	U1TV4	10.19	39.36	26.62								
	Interoffice Channel - 56 kbps - per mile			U1TDX	1L5XX	0.0095										
	Interoffice Channel - 56 kbps - Facility Termination			U1TDX	U1TD5	7.47	39.37	26.62								
	Interoffice Channel - 64 kbps - per mile			U1TDX	1L5XX	0.0095										
	Interoffice Channel - 64 kbps - Facility Termination			U1TDX	U1TD6	7.47	39.37	26.62								
	Interoffice Channel - DS1 - per mile			U1TD1	1L5XX	0.1938										
	Interoffice Channel - DS1 - Facility Termination			U1TD1	U1TF1	31.06	86.69	79.44								
	Interoffice Channel - DS3 - per mile			U1TD3	1L5XX	4.44										
	Interoffice Channel - DS3 - Facility Termination			U1TD3	U1TF3	329.91	270.69	158.05								
	Interoffice Channel - STS-1 - per mile			U1TS1	1L5XX	4.44										
	Interoffice Channel - STS-1 - Facility Termination			U1TS1	U1TFS	339.20	270.69	158.05								
HIGH CAPACITY UNBUNDLED LOCAL LOOP																
DS-3/STS-1 UNBUNDLED LOCAL LOOP - Stand Alone																
	DS3 Unbundled Local Loop - per mile			UE3	1L5ND	12.95										
	DS3 Unbundled Local Loop - Facility Termination			UE3	UE3PX	229.90	438.46	256.30								
	STS-1Unbundled Local Loop - per mile			UDLSX	1L5ND	12.95										
	STS-1 Unbundled Local Loop - Facility Termination			UDLSX	UDLS1	257.82	438.46	256.30								

UNBUNDLED NETWORK ELEMENTS - North Carolina

Att: 2 Exh: A

CATEGORY		RATE ELEMENTS	Interim	Zone	BCS	USOC	RATES($)					Svc Order Submitted Elec per LSR	Svc Order Submitted Manually per LSR	Incremental Charge - Manual Svc Order vs. Electronic-1st	Incremental Charge - Manual Svc Order vs. Electronic-Add'l	Incremental Charge - Manual Svc Order vs. Electronic-Disc 1st	Incremental Charge - Manual Svc Order vs. Electronic-Disc Add'l
							Rec	Nonrecurring		Nonrecurring Disconnect		OSS Rates($)					
								First	Add'l	First	Add'l	SOMEC	SOMAN	SOMAN	SOMAN	SOMAN	SOMAN
	UNBUNDLED DARK FIBER																
		Dark Fiber - Interoffice Transport, Per Four Fiber Strands, Per Route Mile Or Fraction Thereof			UDF, UDFCX	1L5DF	24.77										
		Dark Fiber - Interoffice Transport, Per Four Fiber Strands, Per Route Mile Or Fraction Thereof			UDF, UDFCX	UDF14		620.60	133.88								
ENHANCED EXTENDED LINK (EELs)																	
	Network Elements Used in Combinations																
		2-Wire VG Loop (SL2) in Combination - Zone 1		1	UNCVX	UEAL2	11.96	385.26	72.08								
		2-Wire VG Loop (SL2) in Combination - Zone 2		2	UNCVX	UEAL2	17.36	385.26	72.08								
		2-Wire VG Loop (SL2) in Combination - Zone 3		3	UNCVX	UEAL2	25.23	385.26	72.08								
		4-Wire Analog Voice Grade Loop in Combination - Zone 1		1	UNCVX	UEAL4	19.52	385.26	72.08								
		4-Wire Analog Voice Grade Loop in Combination - Zone 2		2	UNCVX	UEAL4	24.74	385.26	72.08								
		4-Wire Analog Voice Grade Loop in Combination - Zone 3		3	UNCVX	UEAL4	46.11	385.26	72.08								
		2-Wire ISDN Loop in Combination - Zone 1		1	UNCNX	U1L2X	19.78	385.26	72.08								
		2-Wire ISDN Loop in Combination - Zone 2		2	UNCNX	U1L2X	26.16	385.26	72.08								
		2-Wire ISDN Loop in Combination - Zone 3		3	UNCNX	U1L2X	35.37	385.26	72.08								
		4-Wire 56Kbps Digital Grade Loop in Combination - Zone 1		1	UNCDX	UDL56	21.98	385.26	72.08								
		4-Wire 56Kbps Digital Grade Loop in Combination - Zone 2		2	UNCDX	UDL56	27.58	385.26	72.08								
		4-Wire 56Kbps Digital Grade Loop in Combination - Zone 3		3	UNCDX	UDL56	43.08	385.26	72.08								
		4-Wire 64Kbps Digital Grade Loop in Combination - Zone 1		1	UNCDX	UDL64	21.98	385.26	72.08								
		4-Wire 64Kbps Digital Grade Loop in Combination - Zone 2		2	UNCDX	UDL64	27.58	385.26	72.08								
		4-Wire 64Kbps Digital Grade Loop in Combination - Zone 3		3	UNCDX	UDL64	43.08	385.26	72.08								
		4-Wire DS1 Digital Loop in Combination - Zone 1		1	UNC1X	USLXX	63.62	412.03	139.55								
		4-Wire DS1 Digital Loop in Combination - Zone 2		2	UNC1X	USLXX	104.40	412.03	139.55								
		4-Wire DS1 Digital Loop in Combination - Zone 3		3	UNC1X	USLXX	210.22	412.03	139.55								
		DS3 Local Loop in combination - per mile			UNC3X	1L5ND	12.95										
		DS3 Local Loop in combination - Facility Termination			UNC3X	UE3PX	229.90	3,073.55	1,245.84								
		STS-1 Local Loop in combination - per mile			UNCSX	1L5ND	12.95										
		STS-1 Local Loop in combination - Facility Termination			UNCSX	UDLS1	257.82	3,073.55	1,245.84								
		Interoffice Channel in combination - 2-wire VG - per mile			UNCVX	1L5XX	0.0095										
		Interoffice Channel in combination - 2-wire VG - Facility Termination			UNCVX	U1TV2	12.12	131.81	78.34								
		Interoffice Channel in combination - 4-wire VG - per mile			UNCVX	1L5XX	0.0095										
		Interoffice Channel in combination - 4-wire VG - Facility Termination			UNCVX	U1TV4	10.19	131.81	78.34								
		Interoffice Channel in combination - 4-wire 56 kbps - per mile			UNCDX	1L5XX	0.0095										
		Interoffice Channel in combination - 4-wire 56 kbps - Facility Termination			UNCDX	U1TD5	7.47	131.81	78.34								
		Interoffice Channel in combination - 4-wire 64 kbps - per mile			UNCDX	1L5XX	0.0095										
		Interoffice Channel in combination - 4-wire 64 kbps - Facility Termination			UNCDX	U1TD6	7.47	131.81	78.34								
		Interoffice Channel in combination - DS1 - per mile			UNC1X	1L5XX	0.1938										
		Interoffice Channel in combination - DS1 Facility Termination			UNC1X	U1TF1	31.06	234.02	162.52								
		Interoffice Channel in combination - DS3 - per mile			UNC3X	1L5XX	4.44										
		Interoffice Channel in combination - DS3 - Facility Termination			UNC3X	U1TF3	329.91	802.81	146.02								
		Interoffice Channel in combination - STS-1 - per mile			UNCSX	1L5XX	4.44										
		Interoffice Channel in combination - STS-1 Facility Termination			UNCSX	U1TFS	339.20	802.81	146.02								
ADDITIONAL NETWORK ELEMENTS																	
	Optional Features & Functions:																
		Clear Channel Capability Extended Frame Option - per DS1	I		U1TD1, ULDD1,UNC1X	CCOEF		0.00									
		Clear Channel Capability Super FrameOption - per DS1	I		U1TD1, ULDD1,UNC1X	CCOSF		0.00									
		Clear Channel Capability (SF/ESF) Option - Subsequent Activity - per DS1	I		ULDD1, U1TD1, UNC1X, USL	NRCCC		184.76	23.80	1.99	0.78						
		C-bit Parity Option - Subsequent Activity - per DS3	i		U1TD3, ULDD3, UE3, UNC3X	NRCC3		218.92	7.66	0.7576	0.00						
		DS1/DS0 Channel System			UNC1X	MQ1	70.84	170.57									
		DS3/DS1Channel System			UNC3X, UNCSX	MQ3	84.32	0.00									
		Voice Grade COCI in combination			UNCVX	1D1VG	0.4329	54.14	17.51								
		Voice Grade COCI - for 2W-SL2 & 4W Voice Grade Local Loop			UEA	1D1VG	0.4329	6.39	4.58								
		Voice Grade COCI - for connection to a channelized DS1 Local Channel in the same SWC as collocation			U1TUC	1D1VG	0.4329	6.39	4.58								

UNBUNDLED NETWORK ELEMENTS - North Carolina																	Att: 2 Exh: A
CATEGORY		RATE ELEMENTS	Interim	Zone	BCS	USOC	RATES($)					Svc Order Submitted Elec per LSR	Svc Order Submitted Manually per LSR	Incremental Charge - Manual Svc Order vs. Electronic-1st	Incremental Charge - Manual Svc Order vs. Electronic-Add'l	Incremental Charge - Manual Svc Order vs. Electronic-Disc 1st	Incremental Charge - Manual Svc Order vs. Electronic-Disc Add'l
							Rec	Nonrecurring		Nonrecurring Disconnect		OSS Rates($)					
								First	Add'l	First	Add'l	SOMEC	SOMAN	SOMAN	SOMAN	SOMAN	SOMAN
		OCU-DP COCI (2.4-64kbs) in combination			UNCDX	1D1DD	0.9199	54.14	17.51								
		OCU-DP COCI (2.4-64kbs) - for Unbundled Digital Loop			UDL	1D1DD	0.9199	6.39	4.58								
		OCU-DP COCI (2.4-64kbs) - for connection to a channelized DS1 Local Channel in the same SWC as collocation			U1TUD	1D1DD	0.9199	6.39	4.58								
		2-wire ISDN COCI (BRITE) in combination			UNCNX	UC1CA	1.53	54.14	17.51								
		2-wire ISDN COCI (BRITE) - for a Local Loop			UDN	UC1CA	1.53	6.39	4.58								
		2-wire ISDN COCI (BRITE) - for connection to a channelized DS1 Local Channel in the same SWC as collocation			U1TUB	UC1CA	1.53	6.39	4.58								
		DS1 COCI in combination			UNC1X	UC1D1	8.43	54.14	17.51								
		DS1 COCI - for Stand Alone Local Channel			ULDD1	UC1D1	8.43	6.39	4.58								
		DS1 COCI - for Stand Alone Interoffice Channel			U1TD1	UC1D1	8.43	6.39	4.58								
		DS1 COCI - for DS1 Local Loop			USL, NTCD1	UC1D1	8.43	6.39	4.58								
		DS1 COCI - for connection to a channelized DS1 Local Channel in the same SWC as collocation			U1TUA	UC1D1	8.43	6.39	4.58								
		Wholesale - UNE, Switch-As-Is Conversion Charge			UNCVX, UNCDX, UNC1X, UNC3X, UNCSX, UDFCX, XDH1X, HFQC6, XDD2X, XDV6X, XDDFX, XDD4X, HFRST, UNCNX	UNCCC		5.43	5.43								
		Unbundled Misc Rate Element, SNE SAI, Single Network Element - Switch As Is Non-recurring Charge, per circuit (LSR)			U1TVX, U1TDX, U1TD1, U1TD3, U1TS1, UDF, UE3	URESL		36.90	16.15								
		Unbundled Misc Rate Element, SNE SAI, Single Network Element - Switch As Is Non-recurring Charge, incremental charge per circuit on a spreadsheet			U1TVX, U1TDX, U1TD1, U1TD3, U1TS1, UDF, UE3	URESP		1.49	1.49								
	Access to DCS - Customer Reconfiguration (FlexServ)																
		Customer Reconfiguration Establishment						1.43	1.43								
		DS1 DCS Termination with DS0 Switching					21.64	24.81	19.09								
		DS1 DCS Termination with DS1 Switching					7.32	17.93	12.22								
		DS3 DCS Termination with DS1 Switching					136.07	24.81	19.09								
	Node (SynchroNet)																
		Node per month			UNCDX	UNCNT	16.00										
	Service Rearrangements																
		NRC - Change in Facility Assignment per circuit Service Rearrangement	I		U1TVX, U1TDX, U1TUC, U1TUD, U1TUB, ULDVX, ULDDX, UNCVX, UNCDX, UNC1X	URETD		100.82	42.93								
		NRC - Change in Facility Assignment per circuit Project Management (added to CFA per circuit if project managed)	I		U1TVX, U1TDX, U1TUC, U1TUD, U1TUB, ULDVX, ULDDX, UNCVX, UNCDX, UNC1X	URETB		3.18	3.18								
		NRC - Order Coordination Specific Time - Dedicated Transport	I		UNC1X, UNC3X	OCOSR		18.89	18.89								
COMMINGLING																	
		Commingling Authorization			UNCVX, UNCDX, UNC1X, UNC3X, UNCSX, U1TD1, U1TD3, U1TS1, UE3, UDLSX, U1TVX, U1TDX, U1TUB, ULDVX, ULDD1, ULDD3, ULDS1	CMGAU	0.00	0.00	0.00								
	Commingled (UNE part of single bandwidth circuit)																
		Commingled VG COCI			XDV2X	1D1VG	0.4329	54.14	17.51								
		Commingled Digital COCI			XDV6X	1D1DD	0.9199	54.14	17.51								
		Commingled ISDN COCI			XDD4X	UC1CA	1.53	54.14	17.51								
		Commingled 2-wire VG Interoffice Channel Facility Termination			XDV2X	U1TV2	12.12	131.81	78.34								
		Commingled 4-wire VG Interoffice Channel Facility Termination			XDV6X	U1TV4	10.19	131.81	78.34								
		Commingled 56kbps Interoffice Channel Facility Termination			XDD4X	U1TD5	7.47	131.81	78.34								
		Commingled 64kbps Interoffice Channel Facility Termination			XDD4X	U1TD6	7.47	131.81	78.34								

UNBUNDLED NETWORK ELEMENTS - North Carolina																	Att: 2 Exh: A
CATEGORY		RATE ELEMENTS	Interim	Zone	BCS	USOC	RATES($)					Svc Order Submitted Elec per LSR	Svc Order Submitted Manually per LSR	Incremental Charge - Manual Svc Order vs. Electronic-1st	Incremental Charge - Manual Svc Order vs. Electronic-Add'l	Incremental Charge - Manual Svc Order vs. Electronic-Disc 1st	Incremental Charge - Manual Svc Order vs. Electronic-Disc Add'l
							Rec	Nonrecurring		Nonrecurring Disconnect		OSS Rates($)					
								First	Add'l	First	Add'l	SOMEC	SOMAN	SOMAN	SOMAN	SOMAN	SOMAN
		Commingled VG/DS0 Interoffice Channel per mile			XDV2X, XDV6X, XDD4X	1L5XX	0.0095										
		Commingled 2-wire Local Loop Zone 1		1	XDV2X	UEAL2	11.96	385.26	72.08								
		Commingled 2-wire Local Loop Zone 2		2	XDV2X	UEAL2	17.36	385.26	72.08								
		Commingled 2-wire Local Loop Zone 3		3	XDV2X	UEAL2	25.23	385.26	72.08								
		Commingled 4-wire Local Loop Zone 1		1	XDV6X	UEAL4	19.52	385.26	72.08								
		Commingled 4-wire Local Loop Zone 2		2	XDV6X	UEAL4	24.74	385.26	72.08								
		Commingled 4-wire Local Loop Zone 3		3	XDV6X	UEAL4	46.11	385.26	72.08								
		Commingled 56kbps Local Loop Zone 1		1	XDD4X	UDL56	21.98	385.26	72.08								
		Commingled 56kbps Local Loop Zone 2		2	XDD4X	UDL56	27.58	385.26	72.08								
		Commingled 56kbps Local Loop Zone 3		3	XDD4X	UDL56	43.08	385.26	72.08								
		Commingled 64kbps Local Loop Zone 1		1	XDD4X	UDL64	21.98	385.26	72.08								
		Commingled 64kbps Local Loop Zone 2		2	XDD4X	UDL64	27.58	385.26	72.08								
		Commingled 64kbps Local Loop Zone 3		3	XDD4X	UDL64	43.08	385.26	72.08								
		Commingled ISDN Local Loop Zone 1		1	XDD4X	U1L2X	19.78	385.26	72.08								
		Commingled ISDN Local Loop Zone 2		2	XDD4X	U1L2X	26.16	385.26	72.08								
		Commingled ISDN Local Loop Zone 3		3	XDD4X	U1L2X	35.37	385.26	72.08								
		Commingled DS1 COCI			XDH1X	UC1D1	8.43	54.14	17.51								
		Commingled DS1 Interoffice Channel Facility Termination			XDH1X	U1TF1	31.06	234.02	162.52								
		Commingled DS1 Interoffice Channel per mile			XDH1X	1L5XX	0.1938										
		Commingled DS1/DS0 Channel System			XDH1X	MQ1	70.84	170.57									
		Commingled DS1 Local Loop Zone 1		1	XDH1X	USLXX	63.62	412.03	139.55								
		Commingled DS1 Local Loop Zone 2		2	XDH1X	USLXX	104.40	412.03	139.55								
		Commingled DS1 Local Loop Zone 3		3	XDH1X	USLXX	210.22	412.03	139.55								
		Commingled DS3 Local Loop Facility Termination			HFQC6	UE3PX	229.90	3,073.55	1,245.84								
		Commingled DS3/STS-1 Local Loop per mile			HFQC6, HFRST	1L5ND	12.95										
		Commingled STS-1 Local Loop Facility Termination			HFRST	UDLS1	257.82	3,073.55	1,245.84								
		Commingled DS3/DS1 Channel System			HFQC6	MQ3	84.32										
		Commingled DS3 Interoffice Channel Facility Termination			HFQC6	U1TF3	329.91	802.81	146.02								
		Commingled DS3 Interoffice Channel per mile			HFQC6	1L5XX	4.44										
		Commingled STS-1Interoffice Channel Facility Termination			HFRST	U1TFS	339.20	802.81	146.02								
		Commingled STS-1Interoffice Channel per mile			HFRST	1L5XX	4.44										
		Commingled Dark Fiber - Interoffice Transport, Per Four Fiber Strands, Per Route Mile Or Fraction Thereof			HEQDL	1L5DF	24.77										
		Commingled Dark Fiber - Interoffice Transport, Per Four Fiber Strands, Per Route Mile Or Fraction Thereof			HEQDL	UDF14		620.60	133.88								
		UNE to Commingled Conversion Tracking			XDH1X, HFQC6	CMGUN	0.00	0.00	0.00	0.00	0.00						
		SPA to Commingled Conversion Tracking			XDH1X, HFQC6	CMGSP	0.00	0.00	0.00	0.00	0.00						
LNP Query Service																	
		LNP Charge Per query					0.0007579										
		LNP Service Establishment Manual						12.16									
		LNP Service Provisioning with Point Code Establishment						576.33	294.43								
911 PBX LOCATE																	
	911 PBX LOCATE DATABASE CAPABILITY																
		Service Establishment per CLEC per End User Account			9PBDC	9PBEU		1,823.00									
		Changes to TN Range or Customer Profile			9PBDC	9PBTN		182.45									
		Per Telephone Number (Monthly)			9PBDC	9PBMM	0.07										
		Change Company (Service Provider) ID			9PBDC	9PBPC		535.57									
		PBX Locate Service Support per CLEC (Monthlt)			9PBDC	9PBMR	165.63										
		Service Order Charge			9PBDC	9PBSC		15.20									
	911 PBX LOCATE TRANSPORT COMPONENT																
	See Att 3																
	Note: Rates displaying an "I" in Interim column are interim as a result of a Commission order.																

UNBUNDLED NETWORK ELEMENTS - South Carolina																	Att: 2 Exh: A
CATEGORY		RATE ELEMENTS	Interim	Zone	BCS	USOC	RATES($)					Svc Order Submitted Elec per LSR	Svc Order Submitted Manually per LSR	Incremental Charge - Manual Svc Order vs. Electronic-1st	Incremental Charge - Manual Svc Order vs. Electronic-Add'l	Incremental Charge - Manual Svc Order vs. Electronic-Disc 1st	Incremental Charge - Manual Svc Order vs. Electronic-Disc Add'l
							Rec	Nonrecurring		Nonrecurring Disconnect		OSS Rates($)					
								First	Add'l	First	Add'l	SOMEC	SOMAN	SOMAN	SOMAN	SOMAN	SOMAN
	The "Zone" shown in the sections for stand-alone loops or loops as part of a combination refers to Geographically Deaveraged UNE Zones. To view Geographically Deaveraged UNE Zone Designations by Central Office, refer to internet Website: http://www.interconnection.bellsouth.com/become_a_clec/html/interconnection.htm																
OPERATIONS SUPPORT SYSTEMS (OSS) - "REGIONAL RATES"																	
	NOTE: (1) CLEC should contact its contract negotiator if it prefers the "state specific" OSS charges as ordered by the State Commissions. The OSS charges currently contained in this rate exhibit are the AT&T "regional" service ordering charges. CLEC may elect either the state specific Commission ordered rates for the service ordering charges, or CLEC may elect the regional service ordering charge, however, CLEC can not obtain a mixture of the two regardless if CLEC has a interconnection contract established in each of the 9 states.																
	NOTE: (2) Any element that can be ordered electronically will be billed according to the SOMEC rate listed in this category. Please refer to AT&T's Local Ordering Handbook (LOH) to determine if a product can be ordered electronically. For those elements that cannot be ordered electronically at present per the LOH, the listed SOMEC rate in this category reflects the charge that would be billed to a CLEC once electronic ordering capabilities come on-line for that element. Otherwise, the manual ordering charge, SOMAN, will be applied to a CLECs bill when it submits an LSR to AT&T.																
		OSS - Electronic Service Order Charge, Per Local Service Request (LSR) - UNE Only				SOMEC		3.50	0.00	3.50	0.00						
		OSS - Manual Service Order Charge, Per Local Service Request (LSR) - UNE Only				SOMAN		15.69	0.00	1.97	0.00						
UNE SERVICE DATE ADVANCEMENT CHARGE																	
	NOTE: The Expedite charge will be maintained commensurate with BellSouth's FCC No.1 Tariff, Section 5 as applicable.																
		UNE Expedite Charge per Circuit or Line Assignable USOC, per Day			UAL, UEANL, UCL, UEF, UDF, UEQ, UDL, UENTW, UDN, UEA, UHL, ULC, USL, U1T12, U1T48, U1TD1, U1TD3, U1TDX, U1TO3, U1TS1, U1TVX, UC1BC, UC1BL, UC1CC, UC1CL, UC1DC, UC1DL, UC1EC, UC1EL, UC1FC, UC1FL, UC1GC, UC1GL, UC1HC, UC1HL, UDL12, UDL48, UDLO3, UDLSX, UE3, ULD12, ULD48, ULDD1, ULDD3, ULDDX, ULDO3, ULDS1, ULDVX, UNC1X, UNC3X, UNCDX, UNCNX, UNCSX, UNCVX, UNLD1, UNLD3, UXTD1, UXTD3, UXTS1, U1TUC, U1TUD, U1TUB, U1TUA,NTCVG, NTCUD, NTCD1	SDASP		200.00									
ORDER MODIFICATION CHARGE																	
		Order Modification Charge (OMC)						26.21	0.00	0.00	0.00						
		Order Modification Additional Dispatch Charge (OMCAD)						150.00	0.00	0.00	0.00						
UNBUNDLED EXCHANGE ACCESS LOOP																	
	2-WIRE ANALOG VOICE GRADE LOOP																
		2-Wire Analog Voice Grade Loop - Service Level 1- Zone 1		1	UEANL	UEAL2	14.94	37.92	17.62	23.56	5.32						
		2-Wire Analog Voice Grade Loop - Service Level 1- Zone 2		2	UEANL	UEAL2	21.39	37.92	17.62	23.56	5.32						
		2-Wire Analog Voice Grade Loop - Service Level 1- Zone 3		3	UEANL	UEAL2	26.72	37.92	17.62	23.56	5.32						
		2-Wire Analog Voice Grade Loop - Service Level 1- Zone 1		1	UEANL	UEASL	14.94	37.92	17.62	23.56	5.32						
		2-Wire Analog Voice Grade Loop - Service Level 1- Zone 2		2	UEANL	UEASL	21.39	37.92	17.62	23.56	5.32						
		2-Wire Analog Voice Grade Loop - Service Level 1- Zone 3		3	UEANL	UEASL	26.72	37.92	17.62	23.56	5.32						
		Tag Loop at End User Premise			UEANL	URETL		8.95	0.88								
		Loop Testing - Basic 1st Half Hour			UEANL	URET1		34.23	0.00								
		Loop Testing - Basic Additional Half Hour			UEANL	URETA		19.90	19.90								
		Manual Order Coordination for UVL-SL1s (per loop)			UEANL	UEAMC		8.17	8.17								
		Order Coordination for Specified Conversion Time for UVL-SL1 (per LSR)			UEANL	OCOSL		18.13	18.13								

UNBUNDLED NETWORK ELEMENTS - South Carolina																	Att: 2 Exh: A
CATEGORY		RATE ELEMENTS	Interim	Zone	BCS	USOC	RATES($)					Svc Order Submitted Elec per LSR	Svc Order Submitted Manually per LSR	Incremental Charge - Manual Svc Order vs. Electronic-1st	Incremental Charge - Manual Svc Order vs. Electronic-Add'l	Incremental Charge - Manual Svc Order vs. Electronic-Disc 1st	Incremental Charge - Manual Svc Order vs. Electronic-Disc Add'l
							Rec	Nonrecurring		Nonrecurring Disconnect		OSS Rates($)					
								First	Add'l	First	Add'l	SOMEC	SOMAN	SOMAN	SOMAN	SOMAN	SOMAN
		Unbundled Non-Design Voice Loop, billing for AT&T providing make-up (Engineering Information - E.I.)			UEANL	UEANM		13.47	13.47								
		Unbundled Loop Service Rearrangement, change in loop facility, per circuit			UEANL	UREWO		15.81	8.96	23.56	5.32						
		Bulk Migration, per 2 Wire Voice Loop-SL1			UEANL	UREPN		37.92	17.62	23.56	5.32						
		Bulk Migration Order Coordination, per 2 Wire Voice Loop-SL1			UEANL	UREPM		8.17	8.17								
	2-WIRE Unbundled COPPER LOOP																
		2-Wire Unbundled Copper Loop - Non-Designed Zone 1		1	UEQ	UEQ2X	12.94	36.40	16.10	22.66	4.42						
		2 Wire Unbundled Copper Loop - Non-Designed - Zone 2		2	UEQ	UEQ2X	14.51	36.40	16.10	22.66	4.42						
		2 Wire Unbundled Copper Loop - Non-Designed - Zone 3		3	UEQ	UEQ2X	15.02	36.40	16.10	22.66	4.42						
		Unbundled Miscellaneous Rate Element, Tag Loop at End User Premise			UEQ	URETL		8.95	0.88								
		Loop Testing - Basic 1st Half Hour			UEQ	URET1		34.23	0.00								
		Loop Testing - Basic Additional Half Hour			UEQ	URETA		19.90	19.90								
		Manual Order Coordination 2 Wire Unbundled Copper Loop - Non-Designed (per loop)			UEQ	USBMC		8.17	8.17								
		Unbundled Copper Loop - Non-Design billing for AT&T providing make-up (Engineering Information - E.I.)			UEQ	UEQMU		13.47	13.47								
		Unbundled Loop Service Rearrangement, change in loop facility, per circuit			UEQ	UREWO		14.30	7.45	22.66	4.42						
		Bulk Migration, per 2 Wire UCL-ND			UEQ	UREPN		36.40	16.10	22.66	4.42						
		Bulk Migration Order Coordination, per 2 Wire UCL-ND			UEQ	UREPM		8.17	8.17								
UNBUNDLED EXCHANGE ACCESS LOOP																	
	2-WIRE ANALOG VOICE GRADE LOOP																
		2-Wire Analog Voice Grade Loop - Service Level 2 w/Loop or Ground Start Signaling - Zone 1		1	UEA	UEAL2	16.68	105.98	68.43	53.05	10.61						
		2-Wire Analog Voice Grade Loop - Service Level 2 w/Loop or Ground Start Signaling - Zone 2		2	UEA	UEAL2	23.13	105.98	68.43	53.05	10.61						
		2-Wire Analog Voice Grade Loop - Service Level 2 w/Loop or Ground Start Signaling - Zone 3		3	UEA	UEAL2	28.46	105.98	68.43	53.05	10.61						
		2-Wire Analog Voice Grade Loop - Service Level 2 w/Reverse Battery Signaling - Zone 1		1	UEA	UEAR2	16.68	105.98	68.43	53.05	10.61						
		2-Wire Analog Voice Grade Loop - Service Level 2 w/Reverse Battery Signaling - Zone 2		2	UEA	UEAR2	23.13	105.98	68.43	53.05	10.61						
		2-Wire Analog Voice Grade Loop - Service Level 2 w/Reverse Battery Signaling - Zone 3		3	UEA	UEAR2	28.46	105.98	68.43	53.05	10.61						
		Switch-As-Is Conversion rate per UNE Loop, Single LSR, (per DS0)			UEA	URESL		24.88	3.51								
		Switch-As-Is Conversion rate per UNE Loop, Spreadsheet, (per DS0)			UEA	URESP		26.37	4.99								
		Unbundled Loop Service Rearrangement, change in loop facility, per circuit			UEA	UREWO		87.90	36.44								
		Loop Tagging - Service Level 2 (SL2)			UEA	URETL		11.24	1.10								
		Bulk Migration, per 2 Wire Voice Loop-SL2			UEA	UREPN		105.98	68.43								
		Bulk Migration Order Coordination, per 2 Wire Voice Loop-SL2			UEA	UREPM		0.00	0.00								
	4-WIRE ANALOG VOICE GRADE LOOP																
		4-Wire Analog Voice Grade Loop - Zone 1		1	UEA	UEAL4	32.59	132.38	94.83	59.35	14.61						
		4-Wire Analog Voice Grade Loop - Zone 2		2	UEA	UEAL4	43.89	132.38	94.83	59.35	14.61						
		4-Wire Analog Voice Grade Loop - Zone 3		3	UEA	UEAL4	43.38	132.38	94.83	59.35	14.61						
		Switch-As-Is Conversion rate per UNE Loop, Single LSR, (per DS0)			UEA	URESL		24.88	3.51								
		Switch-As-Is Conversion rate per UNE Loop, Spreadsheet, (per DS0)			UEA	URESP		26.37	4.99								
		Unbundled Loop Service Rearrangement, change in loop facility, per circuit			UEA	UREWO		87.90	36.44								
	2-WIRE ISDN DIGITAL GRADE LOOP																
		2-Wire ISDN Digital Grade Loop - Zone 1		1	UDN	U1L2X	25.21	117.58	80.03	53.05	10.61						
		2-Wire ISDN Digital Grade Loop - Zone 2		2	UDN	U1L2X	32.76	117.58	80.03	53.05	10.61						
		2-Wire ISDN Digital Grade Loop - Zone 3		3	UDN	U1L2X	37.70	117.58	80.03	53.05	10.61						
		Unbundled Loop Service Rearrangement, change in loop facility, per circuit			UDN	UREWO		91.82	44.25								
	2-WIRE ASYMMETRICAL DIGITAL SUBSCRIBER LINE (ADSL) COMPATIBLE LOOP																
		2 Wire Unbundled ADSL Loop including manual service inquiry & facility reservation - Zone 1		1	UAL	UAL2X	12.19	120.84	70.56	50.37	7.93						

CATEGORY	RATE ELEMENTS	Interim	Zone	BCS	USOC	RATES($)					Svc Order Submitted Elec per LSR	Svc Order Submitted Manually per LSR	Incremental Charge - Manual Svc Order vs. Electronic-1st	Incremental Charge - Manual Svc Order vs. Electronic-Add'l	Incremental Charge - Manual Svc Order vs. Electronic-Disc 1st	Incremental Charge - Manual Svc Order vs. Electronic-Disc Add'l
						Rec	Nonrecurring		Nonrecurring Disconnect		OSS Rates($)					
							First	Add'l	First	Add'l	SOMEC	SOMAN	SOMAN	SOMAN	SOMAN	SOMAN
	2 Wire Unbundled ADSL Loop including manual service inquiry & facility reservation - Zone 2		2	UAL	UAL2X	13.71	120.84	70.56	50.37	7.93						
	2 Wire Unbundled ADSL Loop including manual service inquiry & facility reservation - Zone 3		3	UAL	UAL2X	14.14	120.84	70.56	50.37	7.93						
	2 Wire Unbundled ADSL Loop without manual service inquiry & facility reservaton - Zone 1		1	UAL	UAL2W	12.19	95.81	57.82	50.37	7.93						
	2 Wire Unbundled ADSL Loop without manual service inquiry & facility reservaton - Zone 2		2	UAL	UAL2W	13.71	95.81	57.82	50.37	7.93						
	2 Wire Unbundled ADSL Loop without manual service inquiry & facility reservaton - Zone 3		3	UAL	UAL2W	14.14	95.81	57.82	50.37	7.93						
	Unbundled Loop Service Rearrangement, change in loop facility, per circuit			UAL	UREWO		86.38	40.48								
	2-WIRE HIGH BIT RATE DIGITAL SUBSCRIBER LINE (HDSL) COMPATIBLE LOOP															
	2 Wire Unbundled HDSL Loop including manual service inquiry & facility reservation - Zone 1		1	UHL	UHL2X	9.58	129.52	79.24	50.37	7.93						
	2 Wire Unbundled HDSL Loop including manual service inquiry & facility reservation - Zone 2		2	UHL	UHL2X	10.92	129.52	79.24	50.37	7.93						
	2 Wire Unbundled HDSL Loop including manual service inquiry & facility reservation - Zone 3		3	UHL	UHL2X	11.40	129.52	79.24	50.37	7.93						
	2 Wire Unbundled HDSL Loop without manual service inquiry and facility reservation - Zone 1		1	UHL	UHL2W	9.58	104.49	66.50	50.37	7.93						
	2 Wire Unbundled HDSL Loop without manual service inquiry and facility reservation - Zone 2		2	UHL	UHL2W	10.92	104.49	66.50	50.37	7.93						
	2 Wire Unbundled HDSL Loop without manual service inquiry and facility reservation - Zone 3		3	UHL	UHL2W	11.40	104.49	66.50	50.37	7.93						
	Unbundled Loop Service Rearrangement, change in loop facility, per circuit			UHL	UREWO		86.32	40.48								
	4-WIRE HIGH BIT RATE DIGITAL SUBSCRIBER LINE (HDSL) COMPATIBLE LOOP															
	4 Wire Unbundled HDSL Loop including manual service inquiry and facility reservation - Zone 1		1	UHL	UHL4X	16.02	158.18	107.89	55.12	10.38						
	4-Wire Unbundled HDSL Loop including manual service inquiry and facility reservation - Zone 2		2	UHL	UHL4X	14.33	158.18	107.89	55.12	10.38						
	4-Wire Unbundled HDSL Loop including manual service inquiry and facility reservation - Zone 3		3	UHL	UHL4X	16.84	158.18	107.89	55.12	10.38						
	4-Wire Unbundled HDSL Loop without manual service inquiry and facility reservation - Zone 1		1	UHL	UHL4W	16.02	133.14	95.16	55.12	10.38						
	4-Wire Unbundled HDSL Loop without manual service inquiry and facility reservation - Zone 2		2	UHL	UHL4W	14.33	133.14	95.16	55.12	10.38						
	4-Wire Unbundled HDSL Loop without manual service inquiry and facility reservation - Zone 3		3	UHL	UHL4W	16.84	133.14	95.16	55.12	10.38						
	Unbundled Loop Service Rearrangement, change in loop facility, per circuit			UHL	UREWO		86.32	40.48								
	4-WIRE DS1 DIGITAL LOOP															
	4-Wire DS1 Digital Loop - Zone 1		1	USL	USLXX	79.51	253.03	157.89	44.80	11.73						
	4-Wire DS1 Digital Loop - Zone 2		2	USL	USLXX	136.00	253.03	157.89	44.80	11.73						
	4-Wire DS1 Digital Loop - Zone 3		3	USL	USLXX	229.15	253.03	157.89	44.80	11.73						
	Switch-As-Is Conversion rate per UNE Loop, Single LSR, (per DS1)			USL	URESL		24.88	3.51								
	Switch-As-Is Conversion rate per UNE Loop, Spreadsheet, (per DS1)			USL	URESP		26.37	4.99								
	Unbundled Loop Service Rearrangement, change in loop facility, per circuit			USL	UREWO		101.30	43.13								
	4-WIRE 19.2, 56 OR 64 KBPS DIGITAL GRADE LOOP															
	4 Wire Unbundled Digital Loop 2.4 Kbps - Zone 1		1	UDL	UDL2X	29.93	126.66	89.12	59.35	14.61						
	4 Wire Unbundled Digital Loop 2.4 Kbps - Zone 2		2	UDL	UDL2X	33.99	126.66	89.12	59.35	14.61						
	4 Wire Unbundled Digital Loop 2.4 Kbps - Zone3		3	UDL	UDL2X	34.74	126.66	89.12	59.35	14.61						
	4 Wire Unbundled Digital Loop 4.8 Kbps -Zone 1		1	UDL	UDL4X	29.93	126.66	89.12	59.35	14.61						
	4 Wire Unbundled Digital Loop 4.8 Kbps - Zone 2		2	UDL	UDL4X	33.99	126.66	89.12	59.35	14.61						
	4 Wire Unbundled Digital Loop 4.8 Kbps - Zone 3		3	UDL	UDL4X	34.74	126.66	89.12	59.35	14.61						
	4 Wire Unbundled Digital Loop 9.6 Kbps - Zone 1		1	UDL	UDL9X	29.93	126.66	89.12	59.35	14.61						
	5 Wire Unbundled Digital Loop 9.6 Kbps - Zone 2		2	UDL	UDL9X	33.99	126.66	89.12	59.35	14.61						
	6 Wire Unbundled Digital Loop 9.6 Kbps - Zone 3		3	UDL	UDL9X	34.74	126.66	89.12	59.35	14.61						
	4 Wire Unbundled Digital 19.2 Kbps - Zone 1		1	UDL	UDL19	29.93	126.66	89.12	59.35	14.61						
	4 Wire Unbundled Digital 19.2 Kbps - Zone 2		2	UDL	UDL19	33.99	126.66	89.12	59.35	14.61						

UNBUNDLED NETWORK ELEMENTS - South Carolina																	Att: 2 Exh: A
CATEGORY		RATE ELEMENTS	Interim	Zone	BCS	USOC	RATES($)					Svc Order Submitted Elec per LSR	Svc Order Submitted Manually per LSR	Incremental Charge - Manual Svc Order vs. Electronic-1st	Incremental Charge - Manual Svc Order vs. Electronic-Add'l	Incremental Charge - Manual Svc Order vs. Electronic-Disc 1st	Incremental Charge - Manual Svc Order vs. Electronic-Disc Add'l
							Rec	Nonrecurring		Nonrecurring Disconnect		OSS Rates($)					
								First	Add'l	First	Add'l	SOMEC	SOMAN	SOMAN	SOMAN	SOMAN	SOMAN
		4 Wire Unbundled Digital 19.2 Kbps - Zone 3		3	UDL	UDL19	34.74	126.66	89.12	59.35	14.61						
		4 Wire Unbundled Digital Loop 56 Kbps - Zone 1		1	UDL	UDL56	29.93	126.66	89.12	59.35	14.61						
		4 Wire Unbundled Digital Loop 56 Kbps - Zone 2		2	UDL	UDL56	33.99	126.66	89.12	59.35	14.61						
		4 Wire Unbundled Digital Loop 56 Kbps - Zone 3		3	UDL	UDL56	34.74	126.66	89.12	59.35	14.61						
		4 Wire Unbundled Digital Loop 64 Kbps - Zone 1		1	UDL	UDL64	29.93	126.66	89.12	59.35	14.61						
		4 Wire Unbundled Digital Loop 64 Kbps - Zone 2		2	UDL	UDL64	33.99	126.66	89.12	59.35	14.61						
		4 Wire Unbundled Digital Loop 64 Kbps - Zone 3		3	UDL	UDL64	34.74	126.66	89.12	59.35	14.61						
		Switch-As-Is Conversion rate per UNE Loop, Single LSR, (per DS0)			UDL	URESL		24.88	3.51								
		Switch-As-Is Conversion rate per UNE Loop, Spreadsheet, (per DS0)			UDL	URESP		26.37	4.99								
		Unbundled Loop Service Rearrangement, change in loop facility, per circuit			UDL	UREWO		102.34	49.85								
	2-WIRE Unbundled COPPER LOOP																
		2-Wire Unbundled Copper Loop-Designed including manual service inquiry & facility reservation - Zone 1		1	UCL	UCLPB	12.19	119.91	69.62	50.37	7.93						
		2-Wire Unbundled Copper Loop-Designed including manual service inquiry & facility reservation - Zone 2		2	UCL	UCLPB	13.71	119.91	69.62	50.37	7.93						
		2 Wire Unbundled Copper Loop-Designed including manual service inquiry & facility reservation - Zone 3		3	UCL	UCLPB	14.14	119.91	69.62	50.37	7.93						
		2-Wire Unbundled Copper Loop-Designed without manual service inquiry and facility reservation - Zone 1		1	UCL	UCLPW	12.19	94.87	56.89	50.37	7.93						
		2-Wire Unbundled Copper Loop-Designed without manual service inquiry and facility reservation - Zone 2		2	UCL	UCLPW	13.71	94.87	56.89	50.37	7.93						
		2-Wire Unbundled Copper Loop-Designed without manual service inquiry and facility reservation - Zone 3		3	UCL	UCLPW	14.14	94.87	56.89	50.37	7.93						
		Order Coordination for Unbundled Copper Loops (per loop)			UCL	UCLMC		8.17	8.17								
		Unbundled Loop Service Rearrangement, change in loop facility, per circuit			UCL	UREWO		94.87	42.57								
	4-WIRE COPPER LOOP																
		4-Wire Copper Loop-Designed including manual service inquiry and facility reservation - Zone 1		1	UCL	UCL4S	19.64	144.17	93.88	55.12	10.38						
		4-Wire Copper Loop-Designed including manual service inquiry and facility reservation - Zone 2		2	UCL	UCL4S	20.90	144.17	93.88	55.12	10.38						
		4-Wire Copper Loop-Designed including manual service inquiry and facility reservation - Zone 3		3	UCL	UCL4S	19.34	144.17	93.88	55.12	10.38						
		4-Wire Copper Loop-Designed without manual service inquiry and facility reservation - Zone 1		1	UCL	UCL4W	19.64	119.13	81.15	55.12	10.38						
		4-Wire Copper Loop-Designed without manual service inquiry and facility reservation - Zone 2		2	UCL	UCL4W	20.90	119.13	81.15	55.12	10.38						
		4-Wire Copper Loop-Designed without manual service inquiry and facility reservation - Zone 3		3	UCL	UCL4W	19.34	119.13	81.15	55.12	10.38						
		Order Coordination for Unbundled Copper Loops (per loop)			UCL	UCLMC		8.17	8.17								
		Unbundled Loop Service Rearrangement, change in loop facility, per circuit			UCL	UREWO		94.87	42.57								
		Order Coordination for Specified Conversion Time (per LSR)			UEA, UDN, UAL, UHL, UDL, USL	OCOSL		18.13									
	Rearrangements																
		EEL to UNE-L Retermination, per 2 Wire Unbundled Voice Loop-SL2			UEA	UREEL		87.90	36.44								
		EEL to UNE-L Retermination, per 4 Wire Unbundled Voice Loop			UEA	UREEL		87.90	36.44								
		EEL to UNE-L Retermination, per 2 Wire ISDN Loop			UDN	UREEL		91.82	44.25								
		EEL to UNE-L Retermination, per 4 Wire Unbundled Digital Loop			UDL	UREEL		102.34	49.85								
		EEL to UNE-L Retermination, per 4 Wire Unbundled DS1 Loop			USL	UREEL		101.30	43.13								
UNE LOOP COMMINGLING																	
	2-WIRE ANALOG VOICE GRADE LOOP - COMMINGLING																
		2-Wire Analog Voice Grade Loop - Service Level 2 w/Loop or Ground Start Signaling - Zone 1		1	NTCVG	UEAL2	16.68	105.98	68.43	53.05	10.61						
		2-Wire Analog Voice Grade Loop - Service Level 2 w/Loop or Ground Start Signaling - Zone 2		2	NTCVG	UEAL2	23.13	105.98	68.43	53.05	10.61						
		2-Wire Analog Voice Grade Loop - Service Level 2 w/Loop or Ground Start Signaling - Zone 3		3	NTCVG	UEAL2	28.46	105.98	68.43	53.05	10.61						

UNBUNDLED NETWORK ELEMENTS - South Carolina

Att: 2 Exh: A

CATEGORY	RATE ELEMENTS	Interim	Zone	BCS	USOC	RATES($)					Svc Order Submitted Elec per LSR	Svc Order Submitted Manually per LSR	Incremental Charge - Manual Svc Order vs. Electronic-1st	Incremental Charge - Manual Svc Order vs. Electronic-Add'l	Incremental Charge - Manual Svc Order vs. Electronic-Disc 1st	Incremental Charge - Manual Svc Order vs. Electronic-Disc Add'l
						Rec	Nonrecurring		Nonrecurring Disconnect		OSS Rates($)					
							First	Add'l	First	Add'l	SOMEC	SOMAN	SOMAN	SOMAN	SOMAN	SOMAN
	2-Wire Analog Voice Grade Loop - Service Level 2 w/Reverse Battery Signaling - Zone 1		1	NTCVG	UEAR2	16.68	105.98	68.43	53.05	10.61						
	2-Wire Analog Voice Grade Loop - Service Level 2 w/Reverse Battery Signaling - Zone 2		2	NTCVG	UEAR2	23.13	105.98	68.43	53.05	10.61						
	2-Wire Analog Voice Grade Loop - Service Level 2 w/Reverse Battery Signaling - Zone 3		3	NTCVG	UEAR2	28.46	105.98	68.43	53.05	10.61						
	Switch-As-Is Conversion rate per UNE Loop, Single LSR, (per DS0)			NTCVG	URESL		24.88	3.51								
	Switch-As-Is Conversion rate per UNE Loop, Spreadsheet, (per DS0)			NTCVG	URESP		26.37	4.99								
	Unbundled Loop Service Rearrangement, change in loop facility, per circuit			NTCVG	UREWO		87.90	36.44								
	Loop Tagging - Service Level 2 (SL2)			NTCVG	URETL		11.24	1.10								
4-WIRE ANALOG VOICE GRADE LOOP																
	4-Wire Analog Voice Grade Loop - Zone 1		1	NTCVG	UEAL4	32.59	132.38	94.83	59.35	14.61						
	4-Wire Analog Voice Grade Loop - Zone 2		2	NTCVG	UEAL4	43.89	132.38	94.83	59.35	14.61						
	4-Wire Analog Voice Grade Loop - Zone 3		3	NTCVG	UEAL4	43.38	132.38	94.83	59.35	14.61						
	Switch-As-Is Conversion rate per UNE Loop, Single LSR, (per DS0)			NTCVG	URESL		24.88	3.51								
	Switch-As-Is Conversion rate per UNE Loop, Spreadsheet, (per DS0)			NTCVG	URESP		26.37	4.99								
	Unbundled Loop Service Rearrangement, change in loop facility, per circuit			NTCVG	UREWO		87.90	36.44								
4-WIRE DS1 DIGITAL LOOP - COMMINGLING																
	4-Wire DS1 Digital Loop - Zone 1		1	NTCD1	USLXX	79.51	253.03	157.89	44.80	11.73						
	4-Wire DS1 Digital Loop - Zone 2		2	NTCD1	USLXX	136.00	253.03	157.89	44.80	11.73						
	4-Wire DS1 Digital Loop - Zone 3		3	NTCD1	USLXX	229.15	253.03	157.89	44.80	11.73						
	Switch-As-Is Conversion rate per UNE Loop, Single LSR, (per DS1)			NTCD1	URESL		24.88	3.51								
	Switch-As-Is Conversion rate per UNE Loop, Spreadsheet, (per DS1)			NTCD1	URESP		26.37	4.99								
	Unbundled Loop Service Rearrangement, change in loop facility, per circuit			NTCD1	UREWO		101.30	43.13								
4-WIRE 19.2, 56 OR 64 KBPS DIGITAL GRADE LOOP																
	4 Wire Unbundled Digital Loop 2.4 Kbps - Zone 1		1	NTCUD	UDL2X	29.93	126.66	89.12	59.35	14.61						
	4 Wire Unbundled Digital Loop 2.4 Kbps - Zone 2		2	NTCUD	UDL2X	33.99	126.66	89.12	59.35	14.61						
	4 Wire Unbundled Digital Loop 2.4 Kbps - Zone3		3	NTCUD	UDL2X	34.74	126.66	89.12	59.35	14.61						
	4 Wire Unbundled Digital Loop 4.8 Kbps -Zone 1		1	NTCUD	UDL4X	29.93	126.66	89.12	59.35	14.61						
	4 Wire Unbundled Digital Loop 4.8 Kbps - Zone 2		2	NTCUD	UDL4X	33.99	126.66	89.12	59.35	14.61						
	4 Wire Unbundled Digital Loop 4.8 Kbps - Zone 3		3	NTCUD	UDL4X	34.74	126.66	89.12	59.35	14.61						
	4 Wire Unbundled Digital Loop 9.6 Kbps - Zone 1		1	NTCUD	UDL9X	29.93	126.66	89.12	59.35	14.61						
	5 Wire Unbundled Digital Loop 9.6 Kbps - Zone 2		2	NTCUD	UDL9X	33.99	126.66	89.12	59.35	14.61						
	6 Wire Unbundled Digital Loop 9.6 Kbps - Zone 3		3	NTCUD	UDL9X	34.74	126.66	89.12	59.35	14.61						
	4 Wire Unbundled Digital 19.2 Kbps - Zone 1		1	NTCUD	UDL19	29.93	126.66	89.12	59.35	14.61						
	4 Wire Unbundled Digital 19.2 Kbps - Zone 2		2	NTCUD	UDL19	33.99	126.66	89.12	59.35	14.61						
	4 Wire Unbundled Digital 19.2 Kbps - Zone 3		3	NTCUD	UDL19	34.74	126.66	89.12	59.35	14.61						
	4 Wire Unbundled Digital Loop 56 Kbps - Zone 1		1	NTCUD	UDL56	29.93	126.66	89.12	59.35	14.61						
	4 Wire Unbundled Digital Loop 56 Kbps - Zone 2		2	NTCUD	UDL56	33.99	126.66	89.12	59.35	14.61						
	4 Wire Unbundled Digital Loop 56 Kbps - Zone 3		3	NTCUD	UDL56	34.74	126.66	89.12	59.35	14.61						
	4 Wire Unbundled Digital Loop 64 Kbps - Zone 1		1	NTCUD	UDL64	29.93	126.66	89.12	59.35	14.61						
	4 Wire Unbundled Digital Loop 64 Kbps - Zone 2		2	NTCUD	UDL64	33.99	126.66	89.12	59.35	14.61						
	4 Wire Unbundled Digital Loop 64 Kbps - Zone 3		3	NTCUD	UDL64	34.74	126.66	89.12	59.35	14.61						
	Switch-As-Is Conversion rate per UNE Loop, Single LSR, (per DS0)			NTCUD	URESL		24.88	3.51								
	Switch-As-Is Conversion rate per UNE Loop, Spreadsheet, (per DS0)			NTCUD	URESP		26.37	4.99								
	Unbundled Loop Service Rearrangement, change in loop facility, per circuit			NTCUD	UREWO		102.34	49.85								
	Order Coordination for Specified Conversion Time (per LSR)			NTCVG, NTCUD, NTCD1	OCOSL		18.13									
MAINTENANCE OF SERVICE																

UNBUNDLED NETWORK ELEMENTS - South Carolina															Att: 2 Exh: A			
CATEGORY		RATE ELEMENTS	Interim	Zone	BCS	USOC	RATES($)					Svc Order Submitted Elec per LSR	Svc Order Submitted Manually per LSR	Incremental Charge - Manual Svc Order vs. Electronic-1st	Incremental Charge - Manual Svc Order vs. Electronic-Add'l	Incremental Charge - Manual Svc Order vs. Electronic-Disc 1st	Incremental Charge - Manual Svc Order vs. Electronic-Disc Add'l
							Rec	Nonrecurring		Nonrecurring Disconnect		OSS Rates($)					
								First	Add'l	First	Add'l	SOMEC	SOMAN	SOMAN	SOMAN	SOMAN	SOMAN
		Maintenance of Service Charge, Basic Time, per half hour			UDC, UEA, UDL, UDN, USL, UAL, UHL, UCL, NTCVG, NTCUD, NTCD1, U1TD1, U1TD3, U1TDX, U1TS1, U1TVX, UDF, UDFCX, UDLSX, UE3, ULDD1, ULDD3, ULDDX, ULDS1, ULDVX, UNC1X, UNC3X, UNCDX, UNCSX, UNCVX, ULS	MVVBT		80.00	55.00								
		Maintenance of Service Charge, Overtime, per half hour			UDC, UEA, UDL, UDN, USL, UAL, UHL, UCL, NTCVG, NTCUD, NTCD1, U1TD1, U1TD3, U1TDX, U1TS1, U1TVX, UDF, UDFCX, UDLSX, UE3, ULDD1, ULDD3, ULDDX, ULDS1, ULDVX, UNC1X, UNC3X, UNCDX, UNCSX, UNCVX, ULS	MVVOT		90.00	65.00								
		Maintenance of Service Charge, Premium, per half hour			UDC, UEA, UDL, UDN, USL, UAL, UHL, UCL, NTCVG, NTCUD, NTCD1, U1TD1, U1TD3, U1TDX, U1TS1, U1TVX, UDF, UDFCX, UDLSX, UE3, ULDD1, ULDD3, ULDDX, ULDS1, ULDVX, UNC1X, UNC3X, UNCDX, UNCSX, UNCVX, ULS	MVVPT		100.00	75.00								
LOOP MODIFICATION																		
		Unbundled Loop Modification, Removal of Load Coils - 2 Wire pair less than or equal to 18k ft, per Unbundled Loop			UAL, UHL, UCL, UEQ, ULS, UEA, UEANL, UEPSR, UEPSB	ULM2L		32.46	32.46								
		Unbundled Loop Modification Removal of Load Coils - 4 Wire less than or equal to 18K ft, per Unbundled Loop			UHL, UCL, UEA	ULM4L		32.46	32.46								
		Unbundled Loop Modification Removal of Bridged Tap Removal, per unbundled loop			UAL, UHL, UCL, UEQ, ULS, UEA, UEANL, UEPSR, UEPSB	ULMBT		32.48	32.48								
SUB-LOOPS																		
	Sub-Loop Distribution																	
		Sub-Loop - Per Cross Box Location - CLEC Feeder Facility Set-Up			UEANL, UEF	USBSA		241.42	241.42								
		Sub-Loop - Per Cross Box Location - Per 25 Pair Panel Set-Up			UEANL, UEF	USBSB		22.69	22.69								
		Sub-Loop - Per Building Equipment Room - CLEC Feeder Facility Set-Up			UEANL	USBSC		177.84	177.84								
		Sub-Loop - Per Building Equipment Room - Per 25 Pair Panel Set-Up			UEANL	USBSD		55.58	55.58								

UNBUNDLED NETWORK ELEMENTS - South Carolina																	Att: 2 Exh: A
CATEGORY		RATE ELEMENTS	Interim	Zone	BCS	USOC	RATES($)					Svc Order Submitted Elec per LSR	Svc Order Submitted Manually per LSR	Incremental Charge - Manual Svc Order vs. Electronic-1st	Incremental Charge - Manual Svc Order vs. Electronic-Add'l	Incremental Charge - Manual Svc Order vs. Electronic-Disc 1st	Incremental Charge - Manual Svc Order vs. Electronic-Disc Add'l
							Rec	Nonrecurring		Nonrecurring Disconnect		OSS Rates($)					
								First	Add'l	First	Add'l	SOMEC	SOMAN	SOMAN	SOMAN	SOMAN	SOMAN
		Sub-Loop Distribution Per 2-Wire Analog Voice Grade Loop - Zone 1		1	UEANL	USBN2	8.87	65.94	31.03	45.35	6.71						
		Sub-Loop Distribution Per 2-Wire Analog Voice Grade Loop - Zone 2		2	UEANL	USBN2	12.58	65.94	31.03	45.35	6.71						
		Sub-Loop Distribution Per 2-Wire Analog Voice Grade Loop - Zone 3		3	UEANL	USBN2	14.79	65.94	31.03	45.35	6.71						
		Order Coordination for Unbundled Sub-Loops, per sub-loop pair			UEANL	USBMC		8.17	8.17								
		Sub-Loop Distribution Per 4-Wire Analog Voice Grade Loop - Zone 1		1	UEANL	USBN4	14.11	79.21	44.29	49.82	9.09						
		Sub-Loop Distribution Per 4-Wire Analog Voice Grade Loop - Zone 2		2	UEANL	USBN4	19.40	79.21	44.29	49.82	9.09						
		Sub-Loop Distribution Per 4-Wire Analog Voice Grade Loop - Zone 3		3	UEANL	USBN4	18.90	79.21	44.29	49.82	9.09						
		Order Coordination for Unbundled Sub-Loops, per sub-loop pair			UEANL	USBMC		8.17	8.17								
		Sub-Loop 2-Wire Intrabuilding Network Cable (INC)			UEANL	USBR2	2.41	53.13	18.21	45.35	6.71						
		Order Coordination for Unbundled Sub-Loops, per sub-loop pair			UEANL	USBMC		8.17	8.17								
		Sub-Loop 4-Wire Intrabuilding Network Cable (INC)			UEANL	USBR4	5.36	59.38	24.47	49.82	9.09						
		Order Coordination for Unbundled Sub-Loops, per sub-loop pair			UEANL	USBMC		8.17	8.17								
		Loop Testing - Basic 1st Half Hour			UEANL	URET1		34.23	0.00								
		Loop Testing - Basic Additional Half Hour			UEANL	URETA		19.90	19.90								
		2 Wire Copper Unbundled Sub-Loop Distribution - Zone 1		1	UEF	UCS2X	7.11	65.94	31.03	45.35	6.71						
		2 Wire Copper Unbundled Sub-Loop Distribution - Zone 2		2	UEF	UCS2X	9.83	65.94	31.03	45.35	6.71						
		2 Wire Copper Unbundled Sub-Loop Distribution - Zone 3		3	UEF	UCS2X	10.48	65.94	31.03	45.35	6.71						
		Order Coordination for Unbundled Sub-Loops, per sub-loop pair			UEF	USBMC		8.17	8.17								
		4 Wire Copper Unbundled Sub-Loop Distribution - Zone 1		1	UEF	UCS4X	7.85	79.21	44.29	49.82	9.09						
		4 Wire Copper Unbundled Sub-Loop Distribution - Zone 2		2	UEF	UCS4X	14.17	79.21	44.29	49.82	9.09						
		4 Wire Copper Unbundled Sub-Loop Distribution - Zone 3		3	UEF	UCS4X	12.64	79.21	44.29	49.82	9.09						
		Order Coordination for Unbundled Sub-Loops, per sub-loop pair			UEF	USBMC		8.17	8.17								
		Loop Tagging Service Level 1, Unbundled Copper Loop, Non-Designed and Distribution Subloops			UEF, UEANL	URETL		8.95	0.88								
		Loop Testing - Basic 1st Half Hour			UEF	URET1		34.23	0.00								
		Loop Testing - Basic Additional Half Hour			UEF	URETA		19.90	19.90								
	Unbundled Sub-Loop Modification																
		Unbundled Sub-Loop Modification - 2-W Copper Dist Load Coil/Equip Removal per 2-W PR			UEF	ULM2X		176.17	5.11								
		Unbundled Sub-loop Modification - 4-W Copper Dist Load Coil/Equip Removal per 4-W PR			UEF	ULM4X		176.17	5.11								
		Unbundled Loop Modification, Removal of Bridge Tap, per unbundled loop			UEF	ULMBT		278.82	6.13								
	Unbundled Network Terminating Wire (UNTW)																
		Unbundled Network Terminating Wire (UNTW) per Pair			UENTW	UENPP	0.3303	30.20	30.20								
	Network Interface Device (NID)																
		Network Interface Device (NID) - 1-2 lines			UENTW	UND12		43.68	28.79								
		Network Interface Device (NID) - 1-6 lines			UENTW	UND16		64.42	49.53								
		Network Interface Device Cross Connect - 2 W			UENTW	UNDC2		5.92	5.92								
		Network Interface Device Cross Connect - 4W			UENTW	UNDC4		5.92	5.92								
UNE OTHER, PROVISIONING ONLY - NO RATE																	
		Unbundled Contact Name, Provisioning Only - no rate			UAL, UCL, UDC, UDL, UDN, UEA, UHL, UEANL, UEF, UEQ, UENTW, NTCVG, NTCUD, NTCD1, USL	UNECN	0.00	0.00									
		Unbundled DS1 Loop - Superframe Format Option - no rate			USL, NTCD1	CCOSF		0.00									
		Unbundled DS1 Loop - Expanded Superframe Format option - no rate			USL, NTCD1	CCOEF		0.00									
		NID - Dispatch and Service Order for NID installation			UENTW	UNDBX	0.00	0.00									
		UNTW Circuit Establishment, Provisioning Only - No Rate			UENTW	UENCE	0.00	0.00									

UNBUNDLED NETWORK ELEMENTS - South Carolina																	Att: 2 Exh: A
CATEGORY		RATE ELEMENTS	Interim	Zone	BCS	USOC	RATES($)					Svc Order Submitted Elec per LSR	Svc Order Submitted Manually per LSR	Incremental Charge - Manual Svc Order vs. Electronic-1st	Incremental Charge - Manual Svc Order vs. Electronic-Add'l	Incremental Charge - Manual Svc Order vs. Electronic-Disc 1st	Incremental Charge - Manual Svc Order vs. Electronic-Disc Add'l
							Rec	Nonrecurring		Nonrecurring Disconnect		OSS Rates($)					
								First	Add'l	First	Add'l	SOMEC	SOMAN	SOMAN	SOMAN	SOMAN	SOMAN
LOOP MAKE-UP																	
		Loop Makeup - Preordering Without Reservation, per working or spare facility queried (Manual).			UMK	UMKLW		24.04	24.04								
		Loop Makeup - Preordering With Reservation, per spare facility queried (Manual).			UMK	UMKLP		25.49	25.49								
		Loop Makeup--With or Without Reservation, per working or spare facility queried (Mechanized)			UMK	UMKMQ		0.34	0.34								
LINE SPLITTING																	
	END USER ORDERING-CENTRAL OFFICE BASED																
		Line Splitting - per line activation DLEC owned splitter			UEPSR UEPSB	UREOS	0.61										
		Line Splitting - per line activation AT&T owned - physical			UEPSR UEPSB	UREBP	0.61	37.09	21.24	20.07	9.85						
		Line Splitting - per line activation AT&T owned - virtual			UEPSR UEPSB	UREBV	0.61	37.09	21.24	20.07	9.85						
	END USER ORDERING - REMOTE SITE LINE SPLITTING																
	UNBUNDLED EXCHANGE ACCESS LOOP																
	2-WIRE ANALOG VOICE GRADE LOOP																
		2 Wire Analog Voice Grade Loop-Service Level 1-Line Splitting-Zone 1		1	UEPSR UEPSB	UEALS	14.94	37.92	17.62	23.56	5.32						
		2 Wire Analog Voice Grade Loop-Service Level 1-Line Splitting-Zone 1		1	UEPSR UEPSB	UEABS	14.94	37.92	17.62	23.56	5.32						
		2 Wire Analog Voice Grade Loop- Service Level 1-Line Splitting-Zone 2		2	UEPSR UEPSB	UEALS	21.39	37.92	17.62	23.56	5.32						
		2 Wire Analog Voice Grade Loop- Service Level 1-Line Splitting-Zone 2		2	UEPSR UEPSB	UEABS	21.39	37.92	17.62	23.56	5.32						
		2 Wire Analog Voice Grade Loop-Service Level 1-Line Splitting-Zone 3		3	UEPSR UEPSB	UEALS	26.72	37.92	17.62	23.56	5.32						
		2 Wire Analog Voice Grade Loop-Service Level 1-Line Splitting-Zone 3		3	UEPSR UEPSB	UEABS	26.72	37.92	17.62	23.56	5.32						
	PHYSICAL COLLOCATION																
		Physical Collocation-2 Wire Cross Connects (Loop) for Line Splitting			UEPSR UEPSB	PE1LS	0.0341	12.32	11.83	6.04	5.45						
	VIRTUAL COLLOCATION																
		Virtual Collocation-2 Wire Cross Connects (Loop) for Line Splitting			UEPSR UEPSB	VE1LS	0.0317	12.32	11.83	6.04	5.45						
UNBUNDLED DEDICATED TRANSPORT																	
	INTEROFFICE CHANNEL - DEDICATED TRANSPORT																
		Interoffice Channel - 2-Wire Voice Grade - per mile			U1TVX	1L5XX	0.0167										
		Interoffice Channel - 2-Wire Voice Grade - Facility Termination			U1TVX	U1TV2	24.30	40.63	27.47	16.77	6.91						
		Interoffice Channel - 2-Wire Voice Grade Rev Bat. - per mile			U1TVX	1L5XX	0.0167										
		Interoffice Channel - 2-Wire VG Rev Bat. - Facility Termination			U1TVX	U1TR2	24.30	40.63	27.47	16.77	6.91						
		Interoffice Channel - 4-Wire Voice Grade - per mile			U1TVX	1L5XX	0.0167										
		Interoffice Channel - 4- Wire Voice Grade - Facility Termination			U1TVX	U1TV4	21.29	40.63	27.47	16.77	6.91						
		Interoffice Channel - 56 kbps - per mile			U1TDX	1L5XX	0.0167										
		Interoffice Channel - 56 kbps - Facility Termination			U1TDX	U1TD5	16.76	40.63	27.47	16.77	6.91						
		Interoffice Channel - 64 kbps - per mile			U1TDX	1L5XX	0.0167										
		Interoffice Channel - 64 kbps - Facility Termination			U1TDX	U1TD6	16.76	40.63	27.47	16.77	6.91						
		Interoffice Channel - DS1 - per mile			U1TD1	1L5XX	0.3415										
		Interoffice Channel - DS1 - Facility Termination			U1TD1	U1TF1	77.14	89.47	81.99	16.39	14.48						
		Interoffice Channel - DS3 - per mile			U1TD3	1L5XX	8.02										
		Interoffice Channel - DS3 - Facility Termination			U1TD3	U1TF3	880.65	279.37	163.12	60.33	58.59						
		Interoffice Channel - STS-1 - per mile			U1TS1	1L5XX	8.02										
		Interoffice Channel - STS-1 - Facility Termination			U1TS1	U1TFS	880.55	279.37	163.12	60.33	58.59						
	UNBUNDLED DARK FIBER																
		Dark Fiber - Interoffice Transport, Per Four Fiber Strands, Per Route Mile Or Fraction Thereof			UDF, UDFCX	1L5DF	36.41										
		Dark Fiber - Interoffice Transport, Per Four Fiber Strands, Per Route Mile Or Fraction Thereof			UDF, UDFCX	UDF14		640.51	138.17	317.76	198.11						
HIGH CAPACITY UNBUNDLED LOCAL LOOP																	
	DS-3/STS-1 UNBUNDLED LOCAL LOOP - Stand Alone																
		DS3 Unbundled Local Loop - per mile			UE3	1L5ND	12.26										
		DS3 Unbundled Local Loop - Facility Termination			UE3	UE3PX	306.36	452.52	264.53	119.75	83.77						
		STS-1Unbundled Local Loop - per mile			UDLSX	1L5ND	12.26										
		STS-1 Unbundled Local Loop - Facility Termination			UDLSX	UDLS1	313.49	452.52	264.53	119.75	83.77						

UNBUNDLED NETWORK ELEMENTS - South Carolina

Att: 2 Exh: A

CATEGORY	RATE ELEMENTS	Interim	Zone	BCS	USOC	RATES($)					Svc Order Submitted Elec per LSR	Svc Order Submitted Manually per LSR	Incremental Charge - Manual Svc Order vs. Electronic-1st	Incremental Charge - Manual Svc Order vs. Electronic-Add'l	Incremental Charge - Manual Svc Order vs. Electronic-Disc 1st	Incremental Charge - Manual Svc Order vs. Electronic-Disc Add'l
						Rec	Nonrecurring		Nonrecurring Disconnect		OSS Rates($)					
							First	Add'l	First	Add'l	SOMEC	SOMAN	SOMAN	SOMAN	SOMAN	SOMAN
ENHANCED EXTENDED LINK (EELs)																
	Network Elements Used in Combinations															
	2-Wire VG Loop (SL2) in Combination - Zone 1		1	UNCVX	UEAL2	16.68	105.98	68.43	53.05	10.61						
	2-Wire VG Loop (SL2) in Combination - Zone 2		2	UNCVX	UEAL2	23.13	105.98	68.43	53.05	10.61						
	2-Wire VG Loop (SL2) in Combination - Zone 3		3	UNCVX	UEAL2	28.46	105.98	68.43	53.05	10.61						
	4-Wire Analog Voice Grade Loop in Combination - Zone 1		1	UNCVX	UEAL4	32.59	132.38	94.83	59.35	14.61						
	4-Wire Analog Voice Grade Loop in Combination - Zone 2		2	UNCVX	UEAL4	43.89	132.38	94.83	59.35	14.61						
	4-Wire Analog Voice Grade Loop in Combination - Zone 3		3	UNCVX	UEAL4	43.38	132.38	94.83	59.35	14.61						
	2-Wire ISDN Loop in Combination - Zone 1		1	UNCNX	U1L2X	25.21	117.58	80.03	53.05	10.61						
	2-Wire ISDN Loop in Combination - Zone 2		2	UNCNX	U1L2X	32.76	117.58	80.03	53.05	10.61						
	2-Wire ISDN Loop in Combination - Zone 3		3	UNCNX	U1L2X	37.70	117.58	80.03	53.05	10.61						
	4-Wire 56Kbps Digital Grade Loop in Combination - Zone 1		1	UNCDX	UDL56	29.93	126.66	89.12	59.35	14.61						
	4-Wire 56Kbps Digital Grade Loop in Combination - Zone 2		2	UNCDX	UDL56	33.99	126.66	89.12	59.35	14.61						
	4-Wire 56Kbps Digital Grade Loop in Combination - Zone 3		3	UNCDX	UDL56	34.74	126.66	89.12	59.35	14.61						
	4-Wire 64Kbps Digital Grade Loop in Combination - Zone 1		1	UNCDX	UDL64	29.93	126.66	89.12	59.35	14.61						
	4-Wire 64Kbps Digital Grade Loop in Combination - Zone 2		2	UNCDX	UDL64	33.99	126.66	89.12	59.35	14.61						
	4-Wire 64Kbps Digital Grade Loop in Combination - Zone 3		3	UNCDX	UDL64	34.74	126.66	89.12	59.35	14.61						
	4-Wire DS1 Digital Loop in Combination - Zone 1		1	UNC1X	USLXX	79.51	253.03	157.89	44.80	11.73						
	4-Wire DS1 Digital Loop in Combination - Zone 2		2	UNC1X	USLXX	136.00	253.03	157.89	44.80	11.73						
	4-Wire DS1 Digital Loop in Combination - Zone 3		3	UNC1X	USLXX	229.15	253.03	157.89	44.80	11.73						
	DS3 Local Loop in combination - per mile			UNC3X	1L5ND	12.26										
	DS3 Local Loop in combination - Facility Termination			UNC3X	UE3PX	306.36	452.52	264.53	119.75	83.77						
	STS-1 Local Loop in combination - per mile			UNCSX	1L5ND	12.26										
	STS-1 Local Loop in combination - Facility Termination			UNCSX	UDLS1	313.49	452.52	264.53	119.75	83.77						
	Interoffice Channel in combination - 2-wire VG - per mile			UNCVX	1L5XX	0.0167										
	Interoffice Channel in combination - 2-wire VG - Facility Termination			UNCVX	U1TV2	24.30	40.63	27.47	16.77	6.91						
	Interoffice Channel in combination - 4-wire VG - per mile			UNCVX	1L5XX	0.0167										
	Interoffice Channel in combination - 4-wire VG - Facility Termination			UNCVX	U1TV4	21.29	40.63	27.47	16.77	6.91						
	Interoffice Channel in combination - 4-wire 56 kbps - per mile			UNCDX	1L5XX	0.0167										
	Interoffice Channel in combination - 4-wire 56 kbps - Facility Termination			UNCDX	U1TD5	16.76	40.63	27.47	16.77	6.91						
	Interoffice Channel in combination - 4-wire 64 kbps - per mile			UNCDX	1L5XX	0.0167										
	Interoffice Channel in combination - 4-wire 64 kbps - Facility Termination			UNCDX	U1TD6	16.76	40.63	27.47	16.77	6.91						
	Interoffice Channel in combination - DS1 - per mile			UNC1X	1L5XX	0.3415										
	Interoffice Channel in combination - DS1 Facility Termination			UNC1X	U1TF1	77.14	89.47	81.99	16.39	14.48						
	Interoffice Channel in combination - DS3 - per mile			UNC3X	1L5XX	8.02										
	Interoffice Channel in combination - DS3 - Facility Termination			UNC3X	U1TF3	880.65	279.37	163.12	60.33	58.59						
	Interoffice Channel in combination - STS-1 - per mile			UNCSX	1L5XX	8.02										
	Interoffice Channel in combination - STS-1 Facility Termination			UNCSX	U1TFS	880.55	279.37	163.12	60.33	58.59						
ADDITIONAL NETWORK ELEMENTS																
	Optional Features & Functions:															
	Clear Channel Capability Extended Frame Option - per DS1	I		U1TD1, ULDD1,UNC1X	CCOEF		0.00									
	Clear Channel Capability Super FrameOption - per DS1	I		U1TD1, ULDD1,UNC1X	CCOSF		0.00									
	Clear Channel Capability (SF/ESF) Option - Subsequent Activity - per DS1	I		ULDD1, U1TD1, UNC1X, USL	NRCCC		185.26	23.86	1.99	0.78						
	C-bit Parity Option - Subsequent Activity - per DS3	i		U1TD3, ULDD3, UE3, UNC3X	NRCC3		219.58	7.69	0.737	0.00						
	DS1/DS0 Channel System			UNC1X	MQ1	107.57	91.24	62.71	10.56	9.81						
	DS3/DS1Channel System			UNC3X, UNCSX	MQ3	144.02	178.54	94.18	33.33	31.90						
	Voice Grade COCI in combination			UNCVX	1D1VG	0.56	6.59	4.73								
	Voice Grade COCI - for 2W-SL2 & 4W Voice Grade Local Loop			UEA	1D1VG	0.56	6.59	4.73								
	Voice Grade COCI - for connection to a channelized DS1 Local Channel in the same SWC as collocation			U1TUC	1D1VG	0.56	6.59	4.73								
	OCU-DP COCI (2.4-64kbs) in combination			UNCDX	1D1DD	1.19	6.59	4.73								
	OCU-DP COCI (2.4-64kbs) - for Unbundled Digital Loop			UDL	1D1DD	1.19	6.59	4.73								
	OCU-DP COCI (2.4-64kbs) - for connection to a channelized DS1 Local Channel in the same SWC as collocation			U1TUD	1D1DD	1.19	6.59	4.73								
	2-wire ISDN COCI (BRITE) in combination			UNCNX	UC1CA	2.56	6.59	4.73								

UNBUNDLED NETWORK ELEMENTS - South Carolina																	Att: 2 Exh: A
CATEGORY		RATE ELEMENTS	Interim	Zone	BCS	USOC	RATES($)					Svc Order Submitted Elec per LSR	Svc Order Submitted Manually per LSR	Incremental Charge - Manual Svc Order vs. Electronic-1st	Incremental Charge - Manual Svc Order vs. Electronic-Add'l	Incremental Charge - Manual Svc Order vs. Electronic-Disc 1st	Incremental Charge - Manual Svc Order vs. Electronic-Disc Add'l
							Rec	Nonrecurring		Nonrecurring Disconnect		OSS Rates($)					
								First	Add'l	First	Add'l	SOMEC	SOMAN	SOMAN	SOMAN	SOMAN	SOMAN
		2-wire ISDN COCI (BRITE) - for a Local Loop			UDN	UC1CA	2.56	6.59	4.73								
		2-wire ISDN COCI (BRITE) - for connection to a channelized DS1 Local Channel in the same SWC as collocation			U1TUB	UC1CA	2.56	6.59	4.73								
		DS1 COCI in combination			UNC1X	UC1D1	8.64	6.59	4.73								
		DS1 COCI - for Stand Alone Local Channel			ULDD1	UC1D1	8.64	6.59	4.73								
		DS1 COCI - for Stand Alone Interoffice Channel			U1TD1	UC1D1	8.64	6.59	4.73								
		DS1 COCI - for DS1 Local Loop			USL, NTCD1	UC1D1	8.64	6.59	4.73								
		DS1 COCI - for connection to a channelized DS1 Local Channel in the same SWC as collocation			U1TUA	UC1D1	8.64	6.59	4.73								
		Wholesale - UNE, Switch-As-Is Conversion Charge			UNCVX, UNCDX, UNC1X, UNC3X, UNCSX, UDFCX, XDH1X, HFQC6, XDD2X, XDV6X, XDDFX, XDD4X, HFRST, UNCNX	UNCCC		5.61	5.61								
		Unbundled Misc Rate Element, SNE SAI, Single Network Element - Switch As Is Non-recurring Charge, per circuit (LSR)			U1TVX, U1TDX, U1TD1, U1TD3, U1TS1, UDF, UE3	URESL		40.27	13.52								
		Unbundled Misc Rate Element, SNE SAI, Single Network Element - Switch As Is Non-recurring Charge, incremental charge per circuit on a spreadsheet			U1TVX, U1TDX, U1TD1, U1TD3, U1TS1, UDF, UE3	URESP		23.80	12.11								
	Access to DCS - Customer Reconfiguration (FlexServ)																
		Customer Reconfiguration Establishment						1.48		1.85							
		DS1 DCS Termination with DS0 Switching					27.96	25.60	19.70	16.67	13.41						
		DS1 DCS Termination with DS1 Switching					12.67	18.51	12.61	12.24	8.98						
		DS3 DCS Termination with DS1 Switching					176.51	25.60	19.70	16.67	13.41						
	Node (SynchroNet)																
		Node per month			UNCDX	UNCNT	14.55										
	Service Rearrangements																
		NRC - Change in Facility Assignment per circuit Service Rearrangement	I		U1TVX, U1TDX, U1TUC, U1TUD, U1TUB, ULDVX, ULDDX, UNCVX, UNCDX, UNC1X	URETD		101.30	43.13								
		NRC - Change in Facility Assignment per circuit Project Management (added to CFA per circuit if project managed)	I		U1TVX, U1TDX, U1TUC, U1TUD, U1TUB, ULDVX, ULDDX, UNCVX, UNCDX, UNC1X	URETB		3.66	3.66								
		NRC - Order Coordination Specific Time - Dedicated Transport	I		UNC1X, UNC3X	OCOSR		18.90	18.90								
COMMINGLING																	
		Commingling Authorization			UNCVX, UNCDX, UNC1X, UNC3X, UNCSX, U1TD1, U1TD3, U1TS1, UE3, UDLSX, U1TVX, U1TDX, U1TUB, ULDVX, ULDD1, ULDD3, ULDS1	CMGAU	0.00	0.00	0.00	0.00	0.00						
	Commingled (UNE part of single bandwidth circuit)																
		Commingled VG COCI			XDV2X	1D1VG	0.56	6.59	4.73								
		Commingled Digital COCI			XDV6X	1D1DD	1.19	6.59	4.73								
		Commingled ISDN COCI			XDD4X	UC1CA	2.56	6.59	4.73								
		Commingled 2-wire VG Interoffice Channel Facility Termination			XDV2X	U1TV2	24.30	40.63	27.47	16.77	6.91						
		Commingled 4-wire VG Interoffice Channel Facility Termination			XDV6X	U1TV4	21.29	40.63	27.47	16.77	6.91						
		Commingled 56kbps Interoffice Channel Facility Termination			XDD4X	U1TD5	16.76	40.63	27.47	16.77	6.91						
		Commingled 64kbps Interoffice Channel Facility Termination			XDD4X	U1TD6	16.76	40.63	27.47	16.77	6.91						
		Commingled VG/DS0 Interoffice Channel per mile			XDV2X, XDV6X, XDD4X	1L5XX	0.0167										
		Commingled 2-wire Local Loop Zone 1		1	XDV2X	UEAL2	16.68	105.98	68.43	53.05	10.61						
		Commingled 2-wire Local Loop Zone 2		2	XDV2X	UEAL2	23.13	105.98	68.43	53.05	10.61						
		Commingled 2-wire Local Loop Zone 3		3	XDV2X	UEAL2	28.46	105.98	68.43	53.05	10.61						

UNBUNDLED NETWORK ELEMENTS - South Carolina

Att: 2 Exh: A

CATEGORY	RATE ELEMENTS	Interim	Zone	BCS	USOC	RATES($)					Svc Order Submitted Elec per LSR	Svc Order Submitted Manually per LSR	Incremental Charge - Manual Svc Order vs. Electronic-1st	Incremental Charge - Manual Svc Order vs. Electronic-Add'l	Incremental Charge - Manual Svc Order vs. Electronic-Disc 1st	Incremental Charge - Manual Svc Order vs. Electronic-Disc Add'l
						Rec	Nonrecurring		Nonrecurring Disconnect		OSS Rates($)					
							First	Add'l	First	Add'l	SOMEC	SOMAN	SOMAN	SOMAN	SOMAN	SOMAN
	Commingled 4-wire Local Loop Zone 1		1	XDV6X	UEAL4	32.59	132.38	94.83	59.35	14.61						
	Commingled 4-wire Local Loop Zone 2		2	XDV6X	UEAL4	43.89	132.38	94.83	59.35	14.61						
	Commingled 4-wire Local Loop Zone 3		3	XDV6X	UEAL4	43.38	132.38	94.83	59.35	14.61						
	Commingled 56kbps Local Loop Zone 1		1	XDD4X	UDL56	29.93	126.66	89.12	59.35	14.61						
	Commingled 56kbps Local Loop Zone 2		2	XDD4X	UDL56	33.99	126.66	89.12	59.35	14.61						
	Commingled 56kbps Local Loop Zone 3		3	XDD4X	UDL56	34.74	126.66	89.12	59.35	14.61						
	Commingled 64kbps Local Loop Zone 1		1	XDD4X	UDL64	29.93	126.66	89.12	59.35	14.61						
	Commingled 64kbps Local Loop Zone 2		2	XDD4X	UDL64	33.99	126.66	89.12	59.35	14.61						
	Commingled 64kbps Local Loop Zone 3		3	XDD4X	UDL64	34.74	126.66	89.12	59.35	14.61						
	Commingled ISDN Local Loop Zone 1		1	XDD4X	U1L2X	25.21	117.58	80.03	53.05	10.61						
	Commingled ISDN Local Loop Zone 2		2	XDD4X	U1L2X	32.76	117.58	80.03	53.05	10.61						
	Commingled ISDN Local Loop Zone 3		3	XDD4X	U1L2X	37.70	117.58	80.03	53.05	10.61						
	Commingled DS1 COCI			XDH1X	UC1D1	8.64	6.59	4.73								
	Commingled DS1 Interoffice Channel Facility Termination			XDH1X	U1TF1	77.14	89.47	81.99	16.39	14.48						
	Commingled DS1 Interoffice Channel per mile			XDH1X	1L5XX	0.3415										
	Commingled DS1/DS0 Channel System			XDH1X	MQ1	107.57	91.24	62.71	10.56	9.81						
	Commingled DS1 Local Loop Zone 1		1	XDH1X	USLXX	79.51	253.03	157.89	44.80	11.73						
	Commingled DS1 Local Loop Zone 2		2	XDH1X	USLXX	136.00	253.03	157.89	44.80	11.73						
	Commingled DS1 Local Loop Zone 3		3	XDH1X	USLXX	229.15	253.03	157.89	44.80	11.73						
	Commingled DS3 Local Loop Facility Termination			HFQC6	UE3PX	306.36	452.52	264.53	119.75	83.77						
	Commingled DS3/STS-1 Local Loop per mile			HFQC6, HFRST	1L5ND	12.26										
	Commingled STS-1 Local Loop Facility Termination			HFRST	UDLS1	313.49	452.52	264.53	119.75	83.77						
	Commingled DS3/DS1 Channel System			HFQC6	MQ3	144.02	178.54	94.18	33.33	31.90						
	Commingled DS3 Interoffice Channel Facility Termination			HFQC6	U1TF3	880.65	279.37	163.12	60.33	58.59						
	Commingled DS3 Interoffice Channel per mile			HFQC6	1L5XX	8.02										
	Commingled STS-1Interoffice Channel Facility Termination			HFRST	U1TFS	880.55	279.37	163.12	60.33	58.59						
	Commingled STS-1Interoffice Channel per mile			HFRST	1L5XX	8.02										
	Commingled Dark Fiber - Interoffice Transport, Per Four Fiber Strands, Per Route Mile Or Fraction Thereof			HEQDL	1L5DF	36.41										
	Commingled Dark Fiber - Interoffice Transport, Per Four Fiber Strands, Per Route Mile Or Fraction Thereof			HEQDL	UDF14		640.51	138.17	317.76	198.11						
	UNE to Commingled Conversion Tracking			XDH1X, HFQC6	CMGUN	0.00	0.00	0.00	0.00	0.00						
	SPA to Commingled Conversion Tracking			XDH1X, HFQC6	CMGSP	0.00	0.00	0.00	0.00	0.00						
LNP Query Service																
	LNP Charge Per query					0.0008837										
	LNP Service Establishment Manual						25.09	25.09	23.07	23.07						
	LNP Service Provisioning with Point Code Establishment						594.82	303.88	269.53	198.18						
911 PBX LOCATE																
	911 PBX LOCATE DATABASE CAPABILITY															
	Service Establishment per CLEC per End User Account			9PBDC	9PBEU		1,813.00									
	Changes to TN Range or Customer Profile			9PBDC	9PBTN		181.40									
	Per Telephone Number (Monthly)			9PBDC	9PBMM	0.07										
	Change Company (Service Provider) ID			9PBDC	9PBPC		532.48									
	PBX Locate Service Support per CLEC (Monthlt)			9PBDC	9PBMR	181.29										
	Service Order Charge			9PBDC	9PBSC		15.69									
	911 PBX LOCATE TRANSPORT COMPONENT															
	See Att 3															
	Note: Rates displaying an "I" in Interim column are interim as a result of a Commission order.															

UNBUNDLED NETWORK ELEMENTS - Tennessee																	Att: 2 Exh: A
CATEGORY		RATE ELEMENTS	Interim	Zone	BCS	USOC	RATES($)					Svc Order Submitted Elec per LSR	Svc Order Submitted Manually per LSR	Incremental Charge - Manual Svc Order vs. Electronic-1st	Incremental Charge - Manual Svc Order vs. Electronic-Add'l	Incremental Charge - Manual Svc Order vs. Electronic-Disc 1st	Incremental Charge - Manual Svc Order vs. Electronic-Disc Add'l
							Rec	Nonrecurring		Nonrecurring Disconnect		OSS Rates($)					
								First	Add'l	First	Add'l	SOMEC	SOMAN	SOMAN	SOMAN	SOMAN	SOMAN
	The "Zone" shown in the sections for stand-alone loops or loops as part of a combination refers to Geographically Deaveraged UNE Zones. To view Geographically Deaveraged UNE Zone Designations by Central Office, refer to internet Website: http://www.interconnection.bellsouth.com/become_a_clec/html/interconnection.htm																
OPERATIONS SUPPORT SYSTEMS (OSS) - "REGIONAL RATES"																	
	NOTE: (1) CLEC should contact its contract negotiator if it prefers the "state specific" OSS charges as ordered by the State Commissions. The OSS charges currently contained in this rate exhibit are the AT&T "regional" service ordering charges. CLEC may elect either the state specific Commission ordered rates for the service ordering charges, or CLEC may elect the regional service ordering charge, however, CLEC can not obtain a mixture of the two regardless if CLEC has a interconnection contract established in each of the 9 states.																
	NOTE: (2) Any element that can be ordered electronically will be billed according to the SOMEC rate listed in this category. Please refer to AT&T's Local Ordering Handbook (LOH) to determine if a product can be ordered electronically. For those elements that cannot be ordered electronically at present per the LOH, the listed SOMEC rate in this category reflects the charge that would be billed to a CLEC once electronic ordering capabilities come on-line for that element. Otherwise, the manual ordering charge, SOMAN, will be applied to a CLECs bill when it submits an LSR to AT&T.																
	NOTE: (3) OSS - Manual Service Order Charge, Per Element - UNE Only **Please see applicable rate element for SOMAN charge**																
		OSS - Electronic Service Order Charge, Per Local Service Request (LSR) - UNE Only				SOMEC		3.50	0.00	3.50	0.00						
UNE SERVICE DATE ADVANCEMENT CHARGE																	
	NOTE: The Expedite charge will be maintained commensurate with BellSouth's FCC No.1 Tariff, Section 5 as applicable.																
		UNE Expedite Charge per Circuit or Line Assignable USOC, per Day			UAL, UEANL, UCL, UEF, UDF, UEQ, UDL, UENTW, UDN, UEA, UHL, ULC, USL, U1T12, U1T48, U1TD1, U1TD3, U1TDX, U1TO3, U1TS1, U1TVX, UC1BC, UC1BL, UC1CC, UC1CL, UC1DC, UC1DL, UC1EC, UC1EL, UC1FC, UC1FL, UC1GC, UC1GL, UC1HC, UC1HL, UDL12, UDL48, UDLO3, UDLSX, UE3, ULD12, ULD48, ULDD1, ULDD3, ULDDX, ULDO3, ULDS1, ULDVX, UNC1X, UNC3X, UNCDX, UNCNX, UNCSX, UNCVX, UNLD1, UNLD3, UXTD1, UXTD3, UXTS1, U1TUC, U1TUD, U1TUB, U1TUA,NTCVG, NTCUD, NTCD1	SDASP		200.00									
ORDER MODIFICATION CHARGE																	
		Order Modification Charge (OMC)						26.21	0.00	0.00	0.00						
		Order Modification Additional Dispatch Charge (OMCAD)						150.00	0.00	0.00	0.00						
UNBUNDLED EXCHANGE ACCESS LOOP																	
	2-WIRE ANALOG VOICE GRADE LOOP																
		2-Wire Analog Voice Grade Loop - Service Level 1- Zone 1		1	UEANL	UEAL2	11.74	31.99	20.02	10.65	1.41			20.35	10.54	13.32	13.32
		2-Wire Analog Voice Grade Loop - Service Level 1- Zone 2		2	UEANL	UEAL2	17.59	31.99	20.02	10.65	1.41			20.35	10.54	13.32	13.32
		2-Wire Analog Voice Grade Loop - Service Level 1- Zone 3		3	UEANL	UEAL2	29.37	31.99	20.02	10.65	1.41			20.35	10.54	13.32	13.32
		2-Wire Analog Voice Grade Loop - Service Level 1- Zone 1		1	UEANL	UEASL	11.74	31.99	20.02	10.65	1.41			20.35	10.54	13.32	13.32
		2-Wire Analog Voice Grade Loop - Service Level 1- Zone 2		2	UEANL	UEASL	17.59	31.99	20.02	10.65	1.41			20.35	10.54	13.32	13.32
		2-Wire Analog Voice Grade Loop - Service Level 1- Zone 3		3	UEANL	UEASL	29.37	31.99	20.02	10.65	1.41			20.35	10.54	13.32	13.32
		Tag Loop at End User Premise			UEANL	URETL		8.95	0.88								
		Loop Testing - Basic 1st Half Hour			UEANL	URET1		57.67	0.00								
		Loop Testing - Basic Additional Half Hour			UEANL	URETA		37.44	37.44								
		Manual Order Coordination for UVL-SL1s (per loop)			UEANL	UEAMC		36.52	36.52								
		Order Coordination for Specified Conversion Time for UVL-SL1 (per LSR)			UEANL	OCOSL		34.29									

UNBUNDLED NETWORK ELEMENTS - Tennessee																	Att: 2 Exh: A
CATEGORY		RATE ELEMENTS	Interim	Zone	BCS	USOC	RATES($)					Svc Order Submitted Elec per LSR	Svc Order Submitted Manually per LSR	Incremental Charge - Manual Svc Order vs. Electronic-1st	Incremental Charge - Manual Svc Order vs. Electronic-Add'l	Incremental Charge - Manual Svc Order vs. Electronic-Disc 1st	Incremental Charge - Manual Svc Order vs. Electronic-Disc Add'l
							Rec	Nonrecurring		Nonrecurring Disconnect		OSS Rates($)					
								First	Add'l	First	Add'l	SOMEC	SOMAN	SOMAN	SOMAN	SOMAN	SOMAN
		Unbundled Non-Design Voice Loop, billing for AT&T providing make-up (Engineering Information - E.I.)			UEANL	UEANM		25.33	25.33								
		Unbundled Loop Service Rearrangement, change in loop facility, per circuit			UEANL	UREWO		15.80	8.95	10.65	1.41			20.35	10.54	13.32	13.32
		Bulk Migration, per 2 Wire Voice Loop-SL1			UEANL	UREPN		31.99	20.02	10.65	1.41						
		Bulk Migration Order Coordination, per 2 Wire Voice Loop-SL1			UEANL	UREPM		36.52	36.52								
	2-WIRE Unbundled COPPER LOOP																
		2-Wire Unbundled Copper Loop - Non-Designed Zone 1		1	UEQ	UEQ2X	11.74	31.99	20.02	10.65	1.41			20.35	10.54	13.32	13.32
		2 Wire Unbundled Copper Loop - Non-Designed - Zone 2		2	UEQ	UEQ2X	17.59	31.99	20.02	10.65	1.41			20.35	10.54	13.32	13.32
		2 Wire Unbundled Copper Loop - Non-Designed - Zone 3		3	UEQ	UEQ2X	29.37	31.99	20.02	10.65	1.41			20.35	10.54	13.32	13.32
		Tag Loop at End User Premise			UEQ	URETL		8.95	0.88								
		Loop Testing - Basic 1st Half Hour			UEQ	URET1		57.67	0.00								
		Loop Testing - Basic Additional Half Hour			UEQ	URETA		37.44	37.44								
		Manual Order Coordination 2 Wire Unbundled Copper Loop - Non-Designed (per loop)			UEQ	USBMC		36.52	36.52								
		Unbundled Copper Loop - Non-Design, billing for AT&T providing make-up (Engineering Information - E.I.)			UEQ	UEQMU		25.33	25.33					20.35	10.54	13.32	13.32
		Unbundled Loop Service Rearrangement, change in loop facility, per circuit			UEQ	UREWO		14.29	7.44	10.65	1.41			20.35	10.54	13.32	13.32
		Bulk Migration, per 2 Wire UCL-ND			UEQ	UREPN		31.99	20.02	10.65	1.41						
		Bulk Migration Order Coordination, per 2 Wire UCL-ND			UEQ	UREPM		36.52	36.52								
UNBUNDLED EXCHANGE ACCESS LOOP																	
	2-WIRE ANALOG VOICE GRADE LOOP																
		2-Wire Analog Voice Grade Loop - Service Level 2 w/Loop or Ground Start Signaling - Zone 1		1	UEA	UEAL2	14.74	75.06	48.20	28.70	17.64			20.35	10.54	13.32	13.32
		2-Wire Analog Voice Grade Loop - Service Level 2 w/Loop or Ground Start Signaling - Zone 2		2	UEA	UEAL2	22.08	75.06	48.20	28.70	17.64			20.35	10.54	13.32	13.32
		2-Wire Analog Voice Grade Loop - Service Level 2 w/Loop or Ground Start Signaling - Zone 3		3	UEA	UEAL2	36.87	75.06	48.20	28.70	17.64			20.35	10.54	13.32	13.32
		2-Wire Analog Voice Grade Loop - Service Level 2 w/Reverse Battery Signaling - Zone 1		1	UEA	UEAR2	14.74	75.06	48.20	28.70	17.64			20.35	10.54	13.32	13.32
		2-Wire Analog Voice Grade Loop - Service Level 2 w/Reverse Battery Signaling - Zone 2		2	UEA	UEAR2	22.08	75.06	48.20	28.70	17.64			20.35	10.54	13.32	13.32
		2-Wire Analog Voice Grade Loop - Service Level 2 w/Reverse Battery Signaling - Zone 3		3	UEA	UEAR2	36.87	75.06	48.20	28.70	17.64			20.35	10.54	13.32	13.32
		Switch-As-Is Conversion rate per UNE Loop, Single LSR, (per DS0)			UEA	URESL		23.42	3.30					20.35	10.54	13.32	13.32
		Switch-As-Is Conversion rate per UNE Loop, Spreadsheet, (per DS0)			UEA	URESP		24.82	4.70								
		Unbundled Loop Service Rearrangement, change in loop facility, per circuit			UEA	UREWO		75.06	36.41					20.35	10.54	13.32	13.32
		Loop Tagging - Service Level 2 (SL2)			UEA	URETL		11.23	1.10								
		Bulk Migration, per 2 Wire Voice Loop-SL2			UEA	UREPN		75.06	48.20								
		Bulk Migration Order Coordination, per 2 Wire Voice Loop-SL2			UEA	UREPM		0.00	0.00								
	4-WIRE ANALOG VOICE GRADE LOOP																
		4-Wire Analog Voice Grade Loop - Zone 1		1	UEA	UEAL4	21.98	122.76	85.57	76.35	39.16			20.35	10.54	13.32	13.32
		4-Wire Analog Voice Grade Loop - Zone 2		2	UEA	UEAL4	32.93	122.76	85.57	76.35	39.16			20.35	10.54	13.32	13.32
		4-Wire Analog Voice Grade Loop - Zone 3		3	UEA	UEAL4	54.99	122.76	85.57	76.35	39.16			20.35	10.54	13.32	13.32
		Switch-As-Is Conversion rate per UNE Loop, Single LSR, (per DS0)			UEA	URESL		23.42	3.30					20.35	10.54	13.32	13.32
		Switch-As-Is Conversion rate per UNE Loop, Spreadsheet, (per DS0)			UEA	URESP		24.82	4.70								
		Unbundled Loop Service Rearrangement, change in loop facility, per circuit			UEA	UREWO		75.06	36.41					20.35	10.54	13.32	13.32
	2-WIRE ISDN DIGITAL GRADE LOOP																
		2-Wire ISDN Digital Grade Loop - Zone 1		1	UDN	U1L2X	19.77	142.76	88.88	76.35	39.16			20.35	10.54	13.32	13.32
		2-Wire ISDN Digital Grade Loop - Zone 2		2	UDN	U1L2X	29.63	142.76	88.88	76.35	39.16			20.35	10.54	13.32	13.32
		2-Wire ISDN Digital Grade Loop - Zone 3		3	UDN	U1L2X	49.47	142.76	88.88	76.35	39.16			20.35	10.54	13.32	13.32
		Unbundled Loop Service Rearrangement, change in loop facility, per circuit			UDN	UREWO		91.77	44.22					20.35	10.54	13.32	13.32
	2-WIRE ASYMMETRICAL DIGITAL SUBSCRIBER LINE (ADSL) COMPATIBLE LOOP																
		2 Wire Unbundled ADSL Loop including manual service inquiry & facility reservation - Zone 1		1	UAL	UAL2X	12.30	156.95	64.54	89.64	16.93			20.35	10.54	13.32	13.32

CATEGORY	RATE ELEMENTS	Interim	Zone	BCS	USOC	RATES($)					Svc Order Submitted Elec per LSR	Svc Order Submitted Manually per LSR	Incremental Charge - Manual Svc Order vs. Electronic-1st	Incremental Charge - Manual Svc Order vs. Electronic-Add'l	Incremental Charge - Manual Svc Order vs. Electronic-Disc 1st	Incremental Charge - Manual Svc Order vs. Electronic-Disc Add'l
						Rec	Nonrecurring		Nonrecurring Disconnect		OSS Rates($)					
							First	Add'l	First	Add'l	SOMEC	SOMAN	SOMAN	SOMAN	SOMAN	SOMAN
	2 Wire Unbundled ADSL Loop including manual service inquiry & facility reservation - Zone 2		2	UAL	UAL2X	18.43	156.95	64.54	89.64	16.93			20.35	10.54	13.32	13.32
	2 Wire Unbundled ADSL Loop including manual service inquiry & facility reservation - Zone 3		3	UAL	UAL2X	30.77	156.95	64.54	89.64	16.93			20.35	10.54	13.32	13.32
	2 Wire Unbundled ADSL Loop without manual service inquiry & facility reservaton - Zone 1		1	UAL	UAL2W	12.30	89.40	35.91	72.02	11.48			20.35	10.54	13.32	13.32
	2 Wire Unbundled ADSL Loop without manual service inquiry & facility reservaton - Zone 2		2	UAL	UAL2W	18.43	89.40	35.91	72.02	11.48			20.35	10.54	13.32	13.32
	2 Wire Unbundled ADSL Loop without manual service inquiry & facility reservaton - Zone 3		3	UAL	UAL2W	30.77	89.40	35.91	72.02	11.48			20.35	10.54	13.32	13.32
	Unbundled Loop Service Rearrangement, change in loop facility, per circuit			UAL	UREWO		31.99	20.02					20.35	10.54	13.32	13.32
	2-WIRE HIGH BIT RATE DIGITAL SUBSCRIBER LINE (HDSL) COMPATIBLE LOOP															
	2 Wire Unbundled HDSL Loop including manual service inquiry & facility reservation - Zone 1		1	UHL	UHL2X	9.64	158.94	65.20	89.64	16.93			20.35	10.54	13.32	13.32
	2 Wire Unbundled HDSL Loop including manual service inquiry & facility reservation - Zone 2		2	UHL	UHL2X	14.44	158.94	65.20	89.64	16.93			20.35	10.54	13.32	13.32
	2 Wire Unbundled HDSL Loop including manual service inquiry & facility reservation - Zone 3		3	UHL	UHL2X	24.12	158.94	65.20	89.64	16.93			20.35	10.54	13.32	13.32
	2 Wire Unbundled HDSL Loop without manual service inquiry and facility reservation - Zone 1		1	UHL	UHL2W	9.64	89.40	35.91	72.02	11.48			20.35	10.54	13.32	13.32
	2 Wire Unbundled HDSL Loop without manual service inquiry and facility reservation - Zone 2		2	UHL	UHL2W	14.44	89.40	35.91	72.02	11.48			20.35	10.54	13.32	13.32
	2 Wire Unbundled HDSL Loop without manual service inquiry and facility reservation - Zone 3		3	UHL	UHL2W	24.12	89.40	35.91	72.02	11.48			20.35	10.54	13.32	13.32
	Unbundled Loop Service Rearrangement, change in loop facility, per circuit			UHL	UREWO		31.99	20.02					20.35	10.54	13.32	13.32
	4-WIRE HIGH BIT RATE DIGITAL SUBSCRIBER LINE (HDSL) COMPATIBLE LOOP															
	4 Wire Unbundled HDSL Loop including manual service inquiry and facility reservation - Zone 1		1	UHL	UHL4X	12.40	169.62	75.89	39.73	19.53			20.35	10.54	13.32	13.32
	4-Wire Unbundled HDSL Loop including manual service inquiry and facility reservation - Zone 2		2	UHL	UHL4X	18.58	169.62	75.89	39.73	19.53			20.35	10.54	13.32	13.32
	4-Wire Unbundled HDSL Loop including manual service inquiry and facility reservation - Zone 3		3	UHL	UHL4X	31.03	169.62	75.89	39.73	19.53			20.35	10.54	13.32	13.32
	4-Wire Unbundled HDSL Loop without manual service inquiry and facility reservation - Zone 1		1	UHL	UHL4W	12.40	100.09	46.60	75.75	13.97			20.35	10.54	13.32	13.32
	4-Wire Unbundled HDSL Loop without manual service inquiry and facility reservation - Zone 2		2	UHL	UHL4W	18.58	100.09	46.60	75.75	13.97			20.35	10.54	13.32	13.32
	4-Wire Unbundled HDSL Loop without manual service inquiry and facility reservation - Zone 3		3	UHL	UHL4W	31.03	100.09	46.60	75.75	13.97			20.35	10.54	13.32	13.32
	Unbundled Loop Service Rearrangement, change in loop facility, per circuit			UHL	UREWO		31.99	20.02					20.35	10.54	13.32	13.32
	4-WIRE DS1 DIGITAL LOOP															
	4-Wire DS1 Digital Loop - Zone 1		1	USL	USLXX	51.38	313.08	219.72	96.86	40.45			18.98	8.43	11.95	11.95
	4-Wire DS1 Digital Loop - Zone 2		2	USL	USLXX	76.98	313.08	219.72	96.86	40.45			18.98	8.43	11.95	11.95
	4-Wire DS1 Digital Loop - Zone 3		3	USL	USLXX	128.54	313.08	219.72	96.86	40.45			18.98	8.43	11.95	11.95
	Switch-As-Is Conversion rate per UNE Loop, Single LSR, (per DS1)			USL	URESL		23.42	3.30								
	Switch-As-Is Conversion rate per UNE Loop, Spreadsheet, (per DS1)			USL	URESP		24.82	4.70								
	Unbundled Loop Service Rearrangement, change in loop facility, per circuit			USL	UREWO		130.47	40.11					20.35	10.54	13.32	13.32
	4-WIRE 19.2, 56 OR 64 KBPS DIGITAL GRADE LOOP															
	4 Wire Unbundled Digital Loop 2.4 Kbps - Zone 1		1	UDL	UDL2X	27.68	207.01	141.38	90.70	44.18						
	4 Wire Unbundled Digital Loop 2.4 Kbps - Zone 2		2	UDL	UDL2X	41.47	207.01	141.38	90.70	44.18						
	4 Wire Unbundled Digital Loop 2.4 Kbps - Zone3		3	UDL	UDL2X	69.24	207.01	141.38	90.70	44.18						
	4 Wire Unbundled Digital Loop 4.8 Kbps -Zone 1		1	UDL	UDL4X	27.68	207.01	141.38	90.70	44.18						
	4 Wire Unbundled Digital Loop 4.8 Kbps - Zone 2		2	UDL	UDL4X	41.47	207.01	141.38	90.70	44.18						
	4 Wire Unbundled Digital Loop 4.8 Kbps - Zone 3		3	UDL	UDL4X	69.24	207.01	141.38	90.70	44.18						
	4 Wire Unbundled Digital Loop 9.6 Kbps - Zone 1		1	UDL	UDL9X	27.68	207.01	141.38	90.70	44.18						
	5 Wire Unbundled Digital Loop 9.6 Kbps - Zone 2		2	UDL	UDL9X	41.47	207.01	141.38	90.70	44.18						
	6 Wire Unbundled Digital Loop 9.6 Kbps - Zone 3		3	UDL	UDL9X	69.24	207.01	141.38	90.70	44.18						
	4 Wire Unbundled Digital 19.2 Kbps - Zone 1		1	UDL	UDL19	27.68	207.01	141.38	90.70	44.18			20.35	10.54	13.32	13.32
	4 Wire Unbundled Digital 19.2 Kbps - Zone 2		2	UDL	UDL19	41.47	207.01	141.38	90.70	44.18			20.35	10.54	13.32	13.32

UNBUNDLED NETWORK ELEMENTS - Tennessee																	Att: 2 Exh: A
CATEGORY		RATE ELEMENTS	Interim	Zone	BCS	USOC	RATES($)					Svc Order Submitted Elec per LSR	Svc Order Submitted Manually per LSR	Incremental Charge - Manual Svc Order vs. Electronic-1st	Incremental Charge - Manual Svc Order vs. Electronic-Add'l	Incremental Charge - Manual Svc Order vs. Electronic-Disc 1st	Incremental Charge - Manual Svc Order vs. Electronic-Disc Add'l
							Rec	Nonrecurring		Nonrecurring Disconnect		OSS Rates($)					
								First	Add'l	First	Add'l	SOMEC	SOMAN	SOMAN	SOMAN	SOMAN	SOMAN
		4 Wire Unbundled Digital 19.2 Kbps - Zone 3		3	UDL	UDL19	69.24	207.01	141.38	90.70	44.18			20.35	10.54	13.32	13.32
		4 Wire Unbundled Digital Loop 56 Kbps - Zone 1		1	UDL	UDL56	27.68	207.01	141.38	90.70	44.18			20.35	10.54	13.32	13.32
		4 Wire Unbundled Digital Loop 56 Kbps - Zone 2		2	UDL	UDL56	41.47	207.01	141.38	90.70	44.18			20.35	10.54	13.32	13.32
		4 Wire Unbundled Digital Loop 56 Kbps - Zone 3		3	UDL	UDL56	69.24	207.01	141.38	90.70	44.18			20.35	10.54	13.32	13.32
		4 Wire Unbundled Digital Loop 64 Kbps - Zone 1		1	UDL	UDL64	27.68	207.01	141.38	90.70	44.18			20.35	10.54	13.32	13.32
		4 Wire Unbundled Digital Loop 64 Kbps - Zone 2		2	UDL	UDL64	41.47	207.01	141.38	90.70	44.18			20.35	10.54	13.32	13.32
		4 Wire Unbundled Digital Loop 64 Kbps - Zone 3		3	UDL	UDL64	69.24	207.01	141.38	90.70	44.18			20.35	10.54	13.32	13.32
		Switch-As-Is Conversion rate per UNE Loop, Single LSR, (per DS0)			UDL	URESL		23.42	3.30					20.35	10.54	13.32	13.32
		Switch-As-Is Conversion rate per UNE Loop, Spreadsheet, (per DS0)			UDL	URESP		24.82	4.70								
		Unbundled Loop Service Rearrangement, change in loop facility, per circuit			UDL	UREWO		102.28	49.82					20.35	10.54	13.32	13.32
	2-WIRE Unbundled COPPER LOOP																
		2-Wire Unbundled Copper Loop-Designed including manual service inquiry & facility reservation - Zone 1		1	UCL	UCLPB	11.74	31.99	20.02	10.65	1.41			20.35	10.54	13.32	13.32
		2-Wire Unbundled Copper Loop-Designed including manual service inquiry & facility reservation - Zone 2		2	UCL	UCLPB	17.59	31.99	20.02	10.65	1.41			20.35	10.54	13.32	13.32
		2 Wire Unbundled Copper Loop-Designed including manual service inquiry & facility reservation - Zone 3		3	UCL	UCLPB	29.37	31.99	20.02	10.65	1.41			20.35	10.54	13.32	13.32
		2-Wire Unbundled Copper Loop-Designed without manual service inquiry and facility reservation - Zone 1		1	UCL	UCLPW	11.74	31.99	20.02	10.65	1.41			20.35	10.54	13.32	13.32
		2-Wire Unbundled Copper Loop-Designed without manual service inquiry and facility reservation - Zone 2		2	UCL	UCLPW	17.59	31.99	20.02	10.65	1.41			20.35	10.54	13.32	13.32
		2-Wire Unbundled Copper Loop-Designed without manual service inquiry and facility reservation - Zone 3		3	UCL	UCLPW	29.37	31.99	20.02	10.65	1.41			20.35	10.54	13.32	13.32
		Order Coordination for Unbundled Copper Loops (per loop)			UCL	UCLMC		36.52	36.52								
		Unbundled Loop Service Rearrangement, change in loop facility, per circuit			UCL	UREWO		31.99	20.02					20.35	10.54	13.32	13.32
	4-WIRE COPPER LOOP																
		4-Wire Copper Loop-Designed including manual service inquiry and facility reservation - Zone 1		1	UCL	UCL4S	21.98	122.76	85.57	76.35	39.16			20.35	10.54	13.32	13.32
		4-Wire Copper Loop-Designed including manual service inquiry and facility reservation - Zone 2		2	UCL	UCL4S	32.93	122.76	85.57	76.35	39.16			20.35	10.54	13.32	13.32
		4-Wire Copper Loop-Designed including manual service inquiry and facility reservation - Zone 3		3	UCL	UCL4S	54.99	122.76	85.57	76.35	39.16			20.35	10.54	13.32	13.32
		4-Wire Copper Loop-Designed without manual service inquiry and facility reservation - Zone 1		1	UCL	UCL4W	21.98	122.76	85.57	76.35	39.16			20.35	10.54	13.32	13.32
		4-Wire Copper Loop-Designed without manual service inquiry and facility reservation - Zone 2		2	UCL	UCL4W	32.93	122.76	85.57	76.35	39.16			20.35	10.54	13.32	13.32
		4-Wire Copper Loop-Designed without manual service inquiry and facility reservation - Zone 3		3	UCL	UCL4W	54.99	122.76	85.57	76.35	39.16			20.35	10.54	13.32	13.32
		Order Coordination for Unbundled Copper Loops (per loop)			UCL	UCLMC		36.52	36.52								
		Unbundled Loop Service Rearrangement, change in loop facility, per circuit			UCL	UREWO		31.99	20.02					20.35	10.54	13.32	13.32
		Order Coordination for Specified Conversion Time (per LSR)			UEA, UDN, UAL, UHL, UDL, USL	OCOSL		34.29									
	Rearrangements																
		EEL to UNE-L Retermination, per 2 Wire Unbundled Voice Loop-SL2			UEA	UREEL		75.06	36.41								
		EEL to UNE-L Retermination, per 4 Wire Unbundled Voice Loop			UEA	UREEL		75.06	36.41								
		EEL to UNE-L Retermination, per 2 Wire ISDN Loop			UDN	UREEL		91.77	44.22								
		EEL to UNE-L Retermination, per 4 Wire Unbundled Digital Loop			UDL	UREEL		102.28	49.82								
		EEL to UNE-L Retermination, per 4 Wire Unbundled DS1 Loop			USL	UREEL		130.47	40.11								
UNE LOOP COMMINGLING																	
	2-WIRE ANALOG VOICE GRADE LOOP - COMMINGLING																
		2-Wire Analog Voice Grade Loop - Service Level 2 w/Loop or Ground Start Signaling - Zone 1		1	NTCVG	UEAL2	14.74	75.06	48.20	28.70	17.64						
		2-Wire Analog Voice Grade Loop - Service Level 2 w/Loop or Ground Start Signaling - Zone 2		2	NTCVG	UEAL2	22.08	75.06	48.20	28.70	17.64						
		2-Wire Analog Voice Grade Loop - Service Level 2 w/Loop or Ground Start Signaling - Zone 3		3	NTCVG	UEAL2	36.87	75.06	48.20	28.70	17.64						

UNBUNDLED NETWORK ELEMENTS - Tennessee																	Att: 2 Exh: A
CATEGORY		RATE ELEMENTS	Interim	Zone	BCS	USOC	RATES($)					Svc Order Submitted Elec per LSR	Svc Order Submitted Manually per LSR	Incremental Charge - Manual Svc Order vs. Electronic-1st	Incremental Charge - Manual Svc Order vs. Electronic-Add'l	Incremental Charge - Manual Svc Order vs. Electronic-Disc 1st	Incremental Charge - Manual Svc Order vs. Electronic-Disc Add'l
							Rec	Nonrecurring		Nonrecurring Disconnect		OSS Rates($)					
								First	Add'l	First	Add'l	SOMEC	SOMAN	SOMAN	SOMAN	SOMAN	SOMAN
		2-Wire Analog Voice Grade Loop - Service Level 2 w/Reverse Battery Signaling - Zone 1		1	NTCVG	UEAR2	14.74	75.06	48.20	28.70	17.64						
		2-Wire Analog Voice Grade Loop - Service Level 2 w/Reverse Battery Signaling - Zone 2		2	NTCVG	UEAR2	22.08	75.06	48.20	28.70	17.64						
		2-Wire Analog Voice Grade Loop - Service Level 2 w/Reverse Battery Signaling - Zone 3		3	NTCVG	UEAR2	36.87	75.06	48.20	28.70	17.64						
		Switch-As-Is Conversion rate per UNE Loop, Single LSR, (per DS0)			NTCVG	URESL		23.42	3.30								
		Switch-As-Is Conversion rate per UNE Loop, Spreadsheet, (per DS0)			NTCVG	URESP		24.82	4.70								
		Unbundled Loop Service Rearrangement, change in loop facility, per circuit			NTCVG	UREWO		75.06	36.41								
		Loop Tagging - Service Level 2 (SL2)			NTCVG	URETL		11.23	1.10								
	4-WIRE ANALOG VOICE GRADE LOOP																
		4-Wire Analog Voice Grade Loop - Zone 1		1	NTCVG	UEAL4	21.98	122.76	85.57	76.35	39.16						
		4-Wire Analog Voice Grade Loop - Zone 2		2	NTCVG	UEAL4	32.93	122.76	85.57	76.35	39.16						
		4-Wire Analog Voice Grade Loop - Zone 3		3	NTCVG	UEAL4	54.99	122.76	85.57	76.35	39.16						
		Switch-As-Is Conversion rate per UNE Loop, Single LSR, (per DS0)			NTCVG	URESL		23.42	3.30								
		Switch-As-Is Conversion rate per UNE Loop, Spreadsheet, (per DS0)			NTCVG	URESP		24.82	4.70								
		Unbundled Loop Service Rearrangement, change in loop facility, per circuit			NTCVG	UREWO		75.06	36.41								
	4-WIRE DS1 DIGITAL LOOP - COMMINGLING																
		4-Wire DS1 Digital Loop - Zone 1		1	NTCD1	USLXX	51.38	313.08	219.72	96.86	40.45						
		4-Wire DS1 Digital Loop - Zone 2		2	NTCD1	USLXX	76.98	313.08	219.72	96.86	40.45						
		4-Wire DS1 Digital Loop - Zone 3		3	NTCD1	USLXX	128.54	313.08	219.72	96.86	40.45						
		Switch-As-Is Conversion rate per UNE Loop, Single LSR, (per DS1)			NTCD1	URESL		23.42	3.30								
		Switch-As-Is Conversion rate per UNE Loop, Spreadsheet, (per DS1)			NTCD1	URESP		24.82	4.70								
		Unbundled Loop Service Rearrangement, change in loop facility, per circuit			NTCD1	UREWO		130.47	40.11								
	4-WIRE 19.2, 56 OR 64 KBPS DIGITAL GRADE LOOP																
		4 Wire Unbundled Digital Loop 2.4 Kbps - Zone 1		1	NTCUD	UDL2X	27.68	207.01	141.38	90.70	44.18						
		4 Wire Unbundled Digital Loop 2.4 Kbps - Zone 2		2	NTCUD	UDL2X	41.47	207.01	141.38	90.70	44.18						
		4 Wire Unbundled Digital Loop 2.4 Kbps - Zone3		3	NTCUD	UDL2X	69.24	207.01	141.38	90.70	44.18						
		4 Wire Unbundled Digital Loop 4.8 Kbps -Zone 1		1	NTCUD	UDL4X	27.68	207.01	141.38	90.70	44.18						
		4 Wire Unbundled Digital Loop 4.8 Kbps - Zone 2		2	NTCUD	UDL4X	41.47	207.01	141.38	90.70	44.18						
		4 Wire Unbundled Digital Loop 4.8 Kbps - Zone 3		3	NTCUD	UDL4X	69.24	207.01	141.38	90.70	44.18						
		4 Wire Unbundled Digital Loop 9.6 Kbps - Zone 1		1	NTCUD	UDL9X	27.68	207.01	141.38	90.70	44.18						
		5 Wire Unbundled Digital Loop 9.6 Kbps - Zone 2		2	NTCUD	UDL9X	41.47	207.01	141.38	90.70	44.18						
		6 Wire Unbundled Digital Loop 9.6 Kbps - Zone 3		3	NTCUD	UDL9X	69.24	207.01	141.38	90.70	44.18						
		4 Wire Unbundled Digital 19.2 Kbps - Zone 1		1	NTCUD	UDL19	27.68	207.01	141.38	90.70	44.18						
		4 Wire Unbundled Digital 19.2 Kbps - Zone 2		2	NTCUD	UDL19	41.47	207.01	141.38	90.70	44.18						
		4 Wire Unbundled Digital 19.2 Kbps - Zone 3		3	NTCUD	UDL19	69.24	207.01	141.38	90.70	44.18						
		4 Wire Unbundled Digital Loop 56 Kbps - Zone 1		1	NTCUD	UDL56	27.68	207.01	141.38	90.70	44.18						
		4 Wire Unbundled Digital Loop 56 Kbps - Zone 2		2	NTCUD	UDL56	41.47	207.01	141.38	90.70	44.18						
		4 Wire Unbundled Digital Loop 56 Kbps - Zone 3		3	NTCUD	UDL56	69.24	207.01	141.38	90.70	44.18						
		4 Wire Unbundled Digital Loop 64 Kbps - Zone 1		1	NTCUD	UDL64	27.68	207.01	141.38	90.70	44.18						
		4 Wire Unbundled Digital Loop 64 Kbps - Zone 2		2	NTCUD	UDL64	41.47	207.01	141.38	90.70	44.18						
		4 Wire Unbundled Digital Loop 64 Kbps - Zone 3		3	NTCUD	UDL64	69.24	207.01	141.38	90.70	44.18						
		Switch-As-Is Conversion rate per UNE Loop, Single LSR, (per DS0)			NTCUD	URESL		23.42	3.30								
		Switch-As-Is Conversion rate per UNE Loop, Spreadsheet, (per DS0)			NTCUD	URESP		24.82	4.70								
		Unbundled Loop Service Rearrangement, change in loop facility, per circuit			NTCUD	UREWO		102.28	49.82								
		Order Coordination for Specified Conversion Time (per LSR)			NTCVG, NTCUD, NTCD1	OCOSL		34.29									
MAINTENANCE OF SERVICE																	

UNBUNDLED NETWORK ELEMENTS - Tennessee																	Att: 2 Exh: A
CATEGORY		RATE ELEMENTS	Interim	Zone	BCS	USOC	RATES($)					Svc Order Submitted Elec per LSR	Svc Order Submitted Manually per LSR	Incremental Charge - Manual Svc Order vs. Electronic-1st	Incremental Charge - Manual Svc Order vs. Electronic-Add'l	Incremental Charge - Manual Svc Order vs. Electronic-Disc 1st	Incremental Charge - Manual Svc Order vs. Electronic-Disc Add'l
							Rec	Nonrecurring		Nonrecurring Disconnect		OSS Rates($)					
								First	Add'l	First	Add'l	SOMEC	SOMAN	SOMAN	SOMAN	SOMAN	SOMAN
		Maintenance of Service Charge, Basic Time, per half hour			UDC, UEA, UDL, UDN, USL, UAL, UHL, UCL, NTCVG, NTCUD, NTCD1, U1TD1, U1TD3, U1TDX, U1TS1, U1TVX, UDF, UDFCX, UDLSX, UE3, ULDD1, ULDD3, ULDDX, ULDS1, ULDVX, UNC1X, UNC3X, UNCDX, UNCSX, UNCVX, ULS	MVVBT		80.00	55.00								
		Maintenance of Service Charge, Overtime, per half hour			UDC, UEA, UDL, UDN, USL, UAL, UHL, UCL, NTCVG, NTCUD, NTCD1, U1TD1, U1TD3, U1TDX, U1TS1, U1TVX, UDF, UDFCX, UDLSX, UE3, ULDD1, ULDD3, ULDDX, ULDS1, ULDVX, UNC1X, UNC3X, UNCDX, UNCSX, UNCVX, ULS	MVVOT		90.00	65.00								
		Maintenance of Service Charge, Premium, per half hour			UDC, UEA, UDL, UDN, USL, UAL, UHL, UCL, NTCVG, NTCUD, NTCD1, U1TD1, U1TD3, U1TDX, U1TS1, U1TVX, UDF, UDFCX, UDLSX, UE3, ULDD1, ULDD3, ULDDX, ULDS1, ULDVX, UNC1X, UNC3X, UNCDX, UNCSX, UNCVX, ULS	MVVPT		100.00	75.00								
LOOP MODIFICATION																	
	Service Order charges will only apply once per Loop																
		Unbundled Loop Modification, Removal of Load Coils - 2 Wire pair less than or equal to 18k ft, per Unbundled Loop			UAL, UHL, UCL, UEQ, ULS, UEA, UEANL, UEPSR, UEPSB	ULM2L		65.40	65.40								
		Unbundled Loop Modification Removal of Load Coils - 4 Wire less than or equal to 18K ft, per Unbundled Loop			UHL, UCL, UEA	ULM4L		65.40	65.40								
		Unbundled Loop Modification Removal of Bridged Tap Removal, per unbundled loop			UAL, UHL, UCL, UEQ, ULS, UEA, UEANL, UEPSR, UEPSB	ULMBT		65.44	65.44								
SUB-LOOPS																	
	Sub-Loop Distribution																
		Sub-Loop - Per Cross Box Location - CLEC Feeder Facility Set-Up			UEANL, UEF	USBSA		517.25	517.25					20.35	10.54	13.32	13.32
		Sub-Loop - Per Cross Box Location - Per 25 Pair Panel Set-Up			UEANL, UEF	USBSB		42.68	42.68					20.35	10.54	13.32	13.32
		Sub-Loop - Per Building Equipment Room - CLEC Feeder Facility Set-Up			UEANL	USBSC		313.01	313.01					20.35	10.54	13.32	13.32
		Sub-Loop - Per Building Equipment Room - Per 25 Pair Panel Set-Up			UEANL	USBSD		108.06	108.06					20.35	10.54	13.32	13.32

UNBUNDLED NETWORK ELEMENTS - Tennessee																	Att: 2 Exh: A
CATEGORY		RATE ELEMENTS	Interim	Zone	BCS	USOC	RATES($)					Svc Order Submitted Elec per LSR	Svc Order Submitted Manually per LSR	Incremental Charge - Manual Svc Order vs. Electronic-1st	Incremental Charge - Manual Svc Order vs. Electronic-Add'l	Incremental Charge - Manual Svc Order vs. Electronic-Disc 1st	Incremental Charge - Manual Svc Order vs. Electronic-Disc Add'l
							Rec	Nonrecurring		Nonrecurring Disconnect		OSS Rates($)					
								First	Add'l	First	Add'l	SOMEC	SOMAN	SOMAN	SOMAN	SOMAN	SOMAN
		Sub-Loop Distribution Per 2-Wire Analog Voice Grade Loop - Statewide			UEANL	USBN2	10.02	148.84	112.34	73.14	36.65			20.35	10.54	13.32	13.32
		Order Coordination for Unbundled Sub-Loops, per sub-loop pair			UEANL	USBMC		36.52	36.52								
		Sub-Loop Distribution Per 4-Wire Analog Voice Grade Loop - Zone 1		1	UEANL	USBN4	6.54	106.85	51.20	74.08	11.55			20.35	10.54	13.32	13.32
		Sub-Loop Distribution Per 4-Wire Analog Voice Grade Loop - Zone 2		2	UEANL	USBN4	9.80	106.85	51.20	74.08	11.55			20.35	10.54	13.32	13.32
		Sub-Loop Distribution Per 4-Wire Analog Voice Grade Loop - Zone 3		3	UEANL	USBN4	16.36	106.85	51.20	74.08	11.55			20.35	10.54	13.32	13.32
		Order Coordination for Unbundled Sub-Loops, per sub-loop pair			UEANL	USBMC		36.52	36.52								
		Sub-Loop 2-Wire Intrabuilding Network Cable (INC)			UEANL	USBR2	1.35	94.56	29.35					20.35	10.54	13.32	13.32
		Order Coordination for Unbundled Sub-Loops, per sub-loop pair			UEANL	USBMC		36.52	36.52								
		Sub-Loop 4-Wire Intrabuilding Network Cable (INC)			UEANL	USBR4	2.26	116.14	37.10					20.35	10.54	13.32	13.32
		Order Coordination for Unbundled Sub-Loops, per sub-loop pair			UEANL	USBMC		36.52	36.52								
		Loop Testing - Basic 1st Half Hour			UEANL	URET1		57.67	0.00								
		Loop Testing - Basic Additional Half Hour			UEANL	URETA		37.44	37.44								
		2 Wire Copper Unbundled Sub-Loop Distribution - Zone 1		1	UEF	UCS2X	4.67	81.40	25.75	70.82	9.55			20.35	10.54	13.32	13.32
		2 Wire Copper Unbundled Sub-Loop Distribution - Zone 2		2	UEF	UCS2X	6.99	81.40	25.75	70.82	9.55			20.35	10.54	13.32	13.32
		2 Wire Copper Unbundled Sub-Loop Distribution - Zone 3		3	UEF	UCS2X	11.67	81.40	25.75	70.82	9.55			20.35	10.54	13.32	13.32
		Order Coordination for Unbundled Sub-Loops, per sub-loop pair			UEF	USBMC		36.52	36.52								
		4 Wire Copper Unbundled Sub-Loop Distribution - Zone 1		1	UEF	UCS4X	5.85	81.74	26.08	74.08	11.55			20.35	10.54	13.32	13.32
		4 Wire Copper Unbundled Sub-Loop Distribution - Zone 2		2	UEF	UCS4X	8.76	81.74	26.08	74.08	11.55			20.35	10.54	13.32	13.32
		4 Wire Copper Unbundled Sub-Loop Distribution - Zone 3		3	UEF	UCS4X	14.63	81.74	26.08	74.08	11.55			20.35	10.54	13.32	13.32
		Order Coordination for Unbundled Sub-Loops, per sub-loop pair			UEF	USBMC		36.52	36.52								
		Loop Tagging Service Level 1, Unbundled Copper Loop, Non-Designed and Distribution Subloops			UEF, UEANL	URETL		8.95	0.88								
		Loop Testing - Basic 1st Half Hour			UEF	URET1		57.67	0.00								
		Loop Testing - Basic Additional Half Hour			UEF	URETA		37.44	37.44								
	Unbundled Sub-Loop Modification																
		Unbundled Sub-Loop Modification - 2-W Copper Dist Load Coil/Equip Removal per 2-W PR			UEF	ULM2X		335.36	7.82								
		Unbundled Sub-loop Modification - 4-W Copper Dist Load Coil/Equip Removal per 4-W PR			UEF	ULM4X		335.36	7.82								
		Unbundled Loop Modification, Removal of Bridge Tap, per unbundled loop			UEF	ULMBT		528.48	9.74								
	Unbundled Network Terminating Wire (UNTW)																
		Unbundled Network Terminating Wire (UNTW) per Pair			UENTW	UENPP	0.4555	2.48	2.48	0.5814	0.5814			20.35	10.54	13.32	13.32
	Network Interface Device (NID)																
		Network Interface Device (NID) - 1-2 lines			UENTW	UND12		63.46	31.06	0.6391	0.6391			20.35	10.54	13.32	13.32
		Network Interface Device (NID) - 1-6 lines			UENTW	UND16		63.46	31.06	0.6522	0.6522			20.35	10.54	13.32	13.32
		Network Interface Device Cross Connect - 2 W			UENTW	UNDC2		8.75	8.75					20.35	10.54	13.32	13.32
		Network Interface Device Cross Connect - 4W			UENTW	UNDC4		8.75	8.75					20.35	10.54	13.32	13.32
UNE OTHER, PROVISIONING ONLY - NO RATE																	
		Unbundled Contact Name, Provisioning Only - no rate			UAL, UCL, UDC, UDL, UDN, UEA, UHL, UEANL, UEF, UEQ, UENTW, NTCVG, NTCUD, NTCD1, USL	UNECN	0.00	0.00									
		Unbundled DS1 Loop - Superframe Format Option - no rate			USL, NTCD1	CCOSF		0.00									
		Unbundled DS1 Loop - Expanded Superframe Format option - no rate			USL, NTCD1	CCOEF		0.00									
		NID - Dispatch and Service Order for NID installation			UENTW	UNDBX	0.00	0.00									
		UNTW Circuit Establishment, Provisioning Only - No Rate			UENTW	UENCE	0.00	0.00									
LOOP MAKE-UP																	
		Loop Makeup - Preordering Without Reservation, per working or spare facility queried (Manual).			UMK	UMKLW		0.76	0.76					20.35	10.54	13.32	13.32

CATEGORY	RATE ELEMENTS	Interim	Zone	BCS	USOC	RATES($) Rec	Nonrecurring First	Nonrecurring Add'l	Nonrecurring Disconnect First	Nonrecurring Disconnect Add'l	Svc Order Submitted Elec per LSR	Svc Order Submitted Manually per LSR	Incremental Charge - Manual Svc Order vs. Electronic-1st	Incremental Charge - Manual Svc Order vs. Electronic-Add'l	Incremental Charge - Manual Svc Order vs. Electronic-Disc 1st	Incremental Charge - Manual Svc Order vs. Electronic-Disc Add'l
											OSS Rates($)					
							First	Add'l	First	Add'l	SOMEC	SOMAN	SOMAN	SOMAN	SOMAN	SOMAN
	Loop Makeup - Preordering With Reservation, per spare facility queried (Manual).			UMK	UMKLP		0.76	0.76					20.35	10.54	13.32	13.32
	Loop Makeup--With or Without Reservation, per working or spare facility queried (Mechanized)			UMK	UMKMQ		0.76	0.76					20.35	10.54	13.32	13.32
LINE SPLITTING																
END USER ORDERING-CENTRAL OFFICE BASED																
	Line Splitting - per line activation DLEC owned splitter			UEPSR UEPSB	UREOS	0.61										
	Line Splitting - per line activation AT&T owned - physical			UEPSR UEPSB	UREBP	0.61	48.96	21.39	35.06	10.79			20.35	10.54	13.32	13.32
	Line Splitting - per line activation AT&T owned - virtual			UEPSR UEPSB	UREBV	0.61	48.96	21.39	35.06	10.79			20.35	10.54	13.32	13.32
END USER ORDERING - REMOTE SITE LINE SPLITTING																
	Remote Site Shared Loop Line Activation for End Users - CLEC Owned Splitter			UEPSR UEPSB	URERS	0.61	53.40	21.61	6.70	6.70			0.00	0.00	0.00	0.00
	Remote Site Shared Loop - Subsequent Activity - CLEC Owned Splitter			UEPSR UEPSB	URERA		50.57	20.06					0.00	0.00	0.00	0.00
UNBUNDLED EXCHANGE ACCESS LOOP																
2-WIRE ANALOG VOICE GRADE LOOP																
	2 Wire Analog Voice Grade Loop-Service Level 1-Line Splitting-Zone 1		1	UEPSR UEPSB	UEALS	11.74	31.99	20.02	10.65	1.41			20.35	10.54	13.32	13.32
	2 Wire Analog Voice Grade Loop-Service Level 1-Line Splitting-Zone 1		1	UEPSR UEPSB	UEABS	11.74	31.99	20.02	10.65	1.41			20.35	10.54	13.32	13.32
	2 Wire Analog Voice Grade Loop- Service Level 1-Line Splitting-Zone 2		2	UEPSR UEPSB	UEALS	17.59	31.99	20.02	10.65	1.41			20.35	10.54	13.32	13.32
	2 Wire Analog Voice Grade Loop- Service Level 1-Line Splitting-Zone 2		2	UEPSR UEPSB	UEABS	17.59	31.99	20.02	10.65	1.41			20.35	10.54	13.32	13.32
	2 Wire Analog Voice Grade Loop-Service Level 1-Line Splitting-Zone 3		3	UEPSR UEPSB	UEALS	29.37	31.99	20.02	10.65	1.41			20.35	10.54	13.32	13.32
	2 Wire Analog Voice Grade Loop-Service Level 1-Line Splitting-Zone 3		3	UEPSR UEPSB	UEABS	29.37	31.99	20.02	10.65	1.41			20.35	10.54	13.32	13.32
PHYSICAL COLLOCATION																
	Physical Collocation-2 Wire Cross Connects (Loop) for Line Splitting			UEPSR UEPSB	PE1LS	0.0475	11.62	9.90	10.38	8.66			0.00	0.00	0.00	0.00
VIRTUAL COLLOCATION																
	Virtual Collocation-2 Wire Cross Connects (Loop) for Line Splitting			UEPSR UEPSB	VE1LS	0.57	11.62	9.90	10.38	8.66			2.07	2.81	0.67	1.41
UNBUNDLED DEDICATED TRANSPORT																
INTEROFFICE CHANNEL - DEDICATED TRANSPORT - Stand Alone																
	Interoffice Channel - 2-Wire Voice Grade - per mile			U1TVX	1L5XX	0.0174										
	Interoffice Channel - 2-Wire Voice Grade - Facility Termination			U1TVX	U1TV2	18.58	55.39	17.37	27.96	3.51			20.35	21.09	9.80	10.54
	Interoffice Channel - 2-Wire Voice Grade Rev Bat. - per mile			U1TVX	1L5XX	0.0174										
	Interoffice Channel - 2-Wire VG. Rev Bat. - Facility Termination			U1TVX	U1TR2	18.58	55.39	17.37	27.96	3.51			20.35	21.09	9.80	10.54
	Interoffice Channel - 4-Wire Voice Grade - per mile			U1TVX	1L5XX	0.0174										
	Interoffice Channel - 4- Wire Voice Grade - Facility Termination			U1TVX	U1TV4	24.09	37.87	26.02	30.78	13.07			15.08	15.08	9.80	10.54
	Interoffice Channel - 56 kbps - per mile			U1TDX	1L5XX	0.0174										
	Interoffice Channel - 56 kbps - Facility Termination			U1TDX	U1TD5	17.98	55.39	17.37	27.96	3.51			20.35	21.09	9.80	10.54
	Interoffice Channel - 64 kbps - per mile			U1TDX	1L5XX	0.0174										
	Interoffice Channel - 64 kbps - Facility Termination			U1TDX	U1TD6	17.98	55.39	17.37	27.96	3.51			20.35	21.09	9.80	10.54
	Interoffice Channel - DS1 - per mile			U1TD1	1L5XX	0.3562										
	Interoffice Channel - DS1 - Facility Termination			U1TD1	U1TF1	77.86	112.40	76.27	19.55	14.99			20.35	21.09	9.80	10.54
	Interoffice Channel - DS3 - per mile			U1TD3	1L5XX	2.34										
	Interoffice Channel - DS3 - Facility Termination			U1TD3	U1TF3	848.99	395.29	176.56	109.04	105.91			36.84	36.84	19.01	19.01
	Interoffice Channel - STS-1 - per mile			U1TS1	1L5XX	2.34										
	Interoffice Channel - STS-1 - Facility Termination			U1TS1	U1TFS	849.30	395.29	176.56	109.04	105.91			36.84	36.84	19.01	19.01
UNBUNDLED DARK FIBER - Stand Alone or in Combination																
	Dark Fiber - Interoffice Transport, Per Four Fiber Strands, Per Route Mile Or Fraction Thereof			UDF, UDFCX	1L5DF	28.74										
	Dark Fiber - Interoffice Transport, Per Four Fiber Strands, Per Route Mile Or Fraction Thereof			UDF, UDFCX	UDF14		1,121.00	153.19	580.26	357.17						
HIGH CAPACITY UNBUNDLED LOCAL LOOP																
DS-3/STS-1 UNBUNDLED LOCAL LOOP - Stand Alone																
	DS3 Unbundled Local Loop - per mile			UE3	1L5ND	9.19										
	DS3 Unbundled Local Loop - Facility Termination			UE3	UE3PX	374.24	595.37	304.50	234.83	170.16			36.84	36.84	19.01	19.01
	STS-1Unbundled Local Loop - per mile			UDLSX	1L5ND	9.19										

UNBUNDLED NETWORK ELEMENTS - Tennessee

Att: 2 Exh: A

CATEGORY	RATE ELEMENTS	Interim	Zone	BCS	USOC	RATES($) Rec	Nonrecurring First	Nonrecurring Add'l	Nonrecurring Disconnect First	Nonrecurring Disconnect Add'l	Svc Order Submitted Elec per LSR	Svc Order Submitted Manually per LSR	Incremental Charge - Manual Svc Order vs. Electronic-1st	Incremental Charge - Manual Svc Order vs. Electronic-Add'l	Incremental Charge - Manual Svc Order vs. Electronic-Disc 1st	Incremental Charge - Manual Svc Order vs. Electronic-Disc Add'l
											OSS Rates($)					
							First	Add'l	First	Add'l	SOMEC	SOMAN	SOMAN	SOMAN	SOMAN	SOMAN
	STS-1 Unbundled Local Loop - Facility Termination			UDLSX	UDLS1	389.35	595.37	304.50	234.83	170.16			36.84	36.84	19.01	19.01
ENHANCED EXTENDED LINK (EELs)																
Network Elements Used in Combinations																
	2-Wire VG Loop (SL2) in Combination - Zone 1		1	UNCVX	UEAL2	14.74	108.76	35.47	72.94	10.86			31.26	10.42		
	2-Wire VG Loop (SL2) in Combination - Zone 2		2	UNCVX	UEAL2	22.08	108.76	35.47	72.94	10.86			31.26	10.42		
	2-Wire VG Loop (SL2) in Combination - Zone 3		3	UNCVX	UEAL2	36.87	108.76	35.47	72.94	10.86			31.26	10.42		
	4-Wire Analog Voice Grade Loop in Combination - Zone 1		1	UNCVX	UEAL4	21.98	108.76	35.47	72.94	10.86			31.26	10.42		
	4-Wire Analog Voice Grade Loop in Combination - Zone 2		2	UNCVX	UEAL4	32.93	108.76	35.47	72.94	10.86			31.26	10.42		
	4-Wire Analog Voice Grade Loop in Combination - Zone 3		3	UNCVX	UEAL4	54.99	108.76	35.47	72.94	10.86			31.26	10.42		
	2-Wire ISDN Loop in Combination - Zone 1		1	UNCNX	U1L2X	19.77	108.76	35.47	72.94	10.86			31.26	10.42		
	2-Wire ISDN Loop in Combination - Zone 2		2	UNCNX	U1L2X	29.63	108.76	35.47	72.94	10.86			31.26	10.42		
	2-Wire ISDN Loop in Combination - Zone 3		3	UNCNX	U1L2X	49.47	108.76	35.47	72.94	10.86			31.26	10.42		
	4-Wire 56Kbps Digital Grade Loop in Combination - Zone 1		1	UNCDX	UDL56	27.68	108.76	35.47	72.94	10.86			20.35	10.54	13.32	
	4-Wire 56Kbps Digital Grade Loop in Combination - Zone 2		2	UNCDX	UDL56	41.47	108.76	35.47	72.94	10.86			20.35	10.54	13.32	
	4-Wire 56Kbps Digital Grade Loop in Combination - Zone 3		3	UNCDX	UDL56	69.24	108.76	35.47	72.94	10.86			20.35	10.54	13.32	
	4-Wire 64Kbps Digital Grade Loop in Combination - Zone 1		1	UNCDX	UDL64	27.68	108.76	35.47	72.94	10.86			20.35	10.54	13.32	
	4-Wire 64Kbps Digital Grade Loop in Combination - Zone 2		2	UNCDX	UDL64	41.47	108.76	35.47	72.94	10.86			20.35	10.54	13.32	
	4-Wire 64Kbps Digital Grade Loop in Combination - Zone 3		3	UNCDX	UDL64	69.24	108.76	35.47	72.94	10.86			20.35	10.54	13.32	
	4-Wire DS1 Digital Loop in Combination - Zone 1		1	UNC1X	USLXX	51.38	228.40	161.74	79.87	24.88			18.98	8.43	11.95	
	4-Wire DS1 Digital Loop in Combination - Zone 2		2	UNC1X	USLXX	76.98	228.40	161.74	79.87	24.88			18.98	8.43	11.95	
	4-Wire DS1 Digital Loop in Combination - Zone 3		3	UNC1X	USLXX	128.54	228.40	161.74	79.87	24.88			18.98	8.43	11.95	
	DS3 Local Loop in combination - per mile			UNC3X	1L5ND	9.19										
	DS3 Local Loop in combination - Facility Termination			UNC3X	UE3PX	374.24	1,260.47	628.84	106.78	45.24			36.84	36.84	19.01	19.01
	STS-1 Local Loop in combination - per mile			UNCSX	1L5ND	9.19										
	STS-1 Local Loop in combination - Facility Termination			UNCSX	UDLS1	389.35	1,260.47	628.84	79.87	24.88			36.84	36.84	19.01	19.01
	Interoffice Channel in combination - 2-wire VG - per mile			UNCVX	1L5XX	0.0174										
	Interoffice Channel in combination - 2-wire VG - Facility Termination			UNCVX	U1TV2	18.58	79.83	44.08	69.32	31.00			20.35	21.09	9.80	10.54
	Interoffice Channel in combination - 4-wire VG - per mile			UNCVX	1L5XX	0.0174										
	Interoffice Channel in combination - 4-wire VG - Facility Termination			UNCVX	U1TV4	24.09	79.83	44.08	69.32	31.00			15.08	15.08	8.66	8.66
	Interoffice Channel in combination - 4-wire 56 kbps - per mile			UNCDX	1L5XX	0.0174										
	Interoffice Channel in combination - 4-wire 56 kbps - Facility Termination			UNCDX	U1TD5	17.98	79.83	44.08	69.32	31.00			20.35	21.09	9.80	10.54
	Interoffice Channel in combination - 4-wire 64 kbps - per mile			UNCDX	1L5XX	0.0174										
	Interoffice Channel in combination - 4-wire 64 kbps - Facility Termination			UNCDX	U1TD6	17.98	79.83	44.08	69.32	31.00			20.35	21.09	9.80	10.54
	Interoffice Channel in combination - DS1 - per mile			UNC1X	1L5XX	0.3562										
	Interoffice Channel in combination - DS1 Facility Termination			UNC1X	U1TF1	77.86	171.24	113.12	70.07	30.90			20.35	21.09	9.80	10.54
	Interoffice Channel in combination - DS3 - per mile			UNC3X	1L5XX	2.34										
	Interoffice Channel in combination - DS3 - Facility Termination			UNC3X	U1TF3	848.99	482.01	153.81	64.43	35.43			36.84	36.84	19.01	19.01
	Interoffice Channel in combination - STS-1 - per mile			UNCSX	1L5XX	2.34										
	Interoffice Channel in combination - STS-1 Facility Termination			UNCSX	U1TFS	849.30	482.01	153.81	64.43	35.43			36.84	36.84	19.01	19.01
ADDITIONAL NETWORK ELEMENTS																
Optional Features & Functions:																
	Clear Channel Capability Extended Frame Option - per DS1	I		U1TD1, ULDD1,UNC1X	CCOEF		0.00	0.00	0.00	0.00						
	Clear Channel Capability Super FrameOption - per DS1	i		U1TD1, ULDD1,UNC1X	CCOSF		0.00	0.00	0.00	0.00						
	Clear Channel Capability (SF/ESF) Option - Subsequent Activity - per DS1	I		ULDD1, U1TD1, UNC1X, USL	NRCCC		185.16	23.86	2.03	0.79						
	C-bit Parity Option - Subsequent Activity - per DS3	i		U1TD3, ULDD3, UE3, UNC3X	NRCC3		219.46	7.68	0.7637							
	DS1/DS0 Channel System			UNC1X	MQ1	80.77	105.76	14.48	3.04	2.74						
	DS3/DS1Channel System			UNC3X, UNCSX	MQ3	222.98	156.02	49.41	17.12	6.77			20.35	9.80	11.49	1.18
	Voice Grade COCI in combination			UNCVX	1D1VG	1.82	5.70	4.42								
	Voice Grade COCI - for 2W-SL2 & 4W Voice Grade Local Loop			UEA	1D1VG	1.82	5.70	4.42								
	Voice Grade COCI - for connection to a channelized DS1 Local Channel in the same SWC as collocation			U1TUC	1D1VG	1.82	5.70	4.42								
	OCU-DP COCI (2.4-64kbs) in combination			UNCDX	1D1DD	0.91	5.70	4.42					20.35	9.80	11.49	1.18
	OCU-DP COCI (2.4-64kbs) - for Unbundled Digital Loop			UDL	1D1DD	0.91	5.70	4.42								
	OCU-DP COCI (2.4-64kbs) - for connection to a channelized DS1 Local Channel in the same SWC as collocation			U1TUD	1D1DD	0.91	5.70	4.42								

UNBUNDLED NETWORK ELEMENTS - Tennessee																	Att: 2 Exh: A
CATEGORY		RATE ELEMENTS	Interim	Zone	BCS	USOC	RATES($)					Svc Order Submitted Elec per LSR	Svc Order Submitted Manually per LSR	Incremental Charge - Manual Svc Order vs. Electronic-1st	Incremental Charge - Manual Svc Order vs. Electronic-Add'l	Incremental Charge - Manual Svc Order vs. Electronic-Disc 1st	Incremental Charge - Manual Svc Order vs. Electronic-Disc Add'l
							Rec	Nonrecurring		Nonrecurring Disconnect		OSS Rates($)					
								First	Add'l	First	Add'l	SOMEC	SOMAN	SOMAN	SOMAN	SOMAN	SOMAN
		2-wire ISDN COCI (BRITE) in combination			UNCNX	UC1CA	17.58	5.70	4.42					20.35	9.80	11.49	1.18
		2-wire ISDN COCI (BRITE) - for a Local Loop			UDN	UC1CA	17.58	5.70	4.42								
		2-wire ISDN COCI (BRITE) - for connection to a channelized DS1 Local Channel in the same SWC as collocation			U1TUB	UC1CA	17.58	5.70	4.42								
		DS1 COCI in combination			UNC1X	UC1D1	17.58	5.70	4.42					20.35	9.80	11.49	1.18
		DS1 COCI - for Stand Alone Local Channel			ULDD1	UC1D1	17.58	5.70	4.42								
		DS1 COCI - for Stand Alone Interoffice Channel			U1TD1	UC1D1	17.58	5.70	4.42								
		DS1 COCI - for DS1 Local Loop			USL, NTCD1	UC1D1	17.58	5.70	4.42								
		DS1 COCI - for connection to a channelized DS1 Local Channel in the same SWC as collocation			U1TUA	UC1D1	17.58	5.70	4.42								
		Wholesale - UNE, Switch-As-Is Conversion Charge			UNCVX, UNCDX, UNC1X, UNC3X, UNCSX, UDFCX, XDH1X, HFQC6, XDD2X, XDV6X, XDDFX, XDD4X, HFRST, UNCNX	UNCCC		52.73	24.62	9.12	9.12						
		Unbundled Misc Rate Element, SNE SAI, Single Network Element - Switch As Is Non-recurring Charge, per circuit (LSR)	I		U1TVX, U1TDX, U1TD1, U1TD3, U1TS1, UDF, UE3	URESL		34.53	15.11								
		Unbundled Misc Rate Element, SNE SAI, Single Network Element - Switch As Is Non-recurring Charge, incremental charge per circuit on a spreadsheet	i		U1TVX, U1TDX, U1TD1, U1TD3, U1TS1, UDF, UE3	URESP		1.40	1.40								
	Access to DCS - Customer Reconfiguration (FlexServ)																
		Customer Reconfiguration Establishment						2.78		3.32							
		DS1 DCS Termination with DS0 Switching					23.35	41.14	34.25	29.94	24.08						
		DS1 DCS Termination with DS1 Switching					13.45	27.79	20.90	21.99	16.12						
		DS3 DCS Termination with DS1 Switching					150.88	41.14	34.25	29.94	24.08						
	Node (SynchroNet)																
		Node per month			UNCDX	UNCNT	17.11										
	Service Rearrangements																
		NRC - Change in Facility Assignment per circuit Service Rearrangement	I		U1TVX, U1TDX, U1TUC, U1TUD, U1TUB, ULDVX, ULDDX, UNCVX, UNCDX, UNC1X	URETD		130.47	40.11								
		NRC - Change in Facility Assignment per circuit Project Management (added to CFA per circuit if project managed)	I		U1TVX, U1TDX, U1TUC, U1TUD, U1TUB, ULDVX, ULDDX, UNCVX, UNCDX, UNC1X	URETB		3.44	3.44								
		NRC - Order Coordination Specific Time - Dedicated Transport	I		UNC1X, UNC3X	OCOSR		18.93	18.93								
COMMINGLING																	
		Commingling Authorization			UNCVX, UNCDX, UNC1X, UNC3X, UNCSX, U1TD1, U1TD3, U1TS1, UE3, UDLSX, U1TVX, U1TDX, U1TUB, ULDVX, ULDD1, ULDD3, ULDS1	CMGAU	0.00	0.00	0.00	0.00	0.00						
	Commingled (UNE part of single bandwidth circuit)																
		Commingled VG COCI			XDV2X	1D1VG	1.82	5.70	4.42								
		Commingled Digital COCI			XDV6X	1D1DD	0.91	5.70	4.42								
		Commingled ISDN COCI			XDD4X	UC1CA	17.58	5.70	4.42								
		Commingled 2-wire VG Interoffice Channel Facility Termination			XDV2X	U1TV2	18.58	79.83	44.08	69.32	31.00						
		Commingled 4-wire VG Interoffice Channel Facility Termination			XDV6X	U1TV4	24.09	79.83	44.08	69.32	31.00						
		Commingled 56kbps Interoffice Channel Facility Termination			XDD4X	U1TD5	17.98	79.83	44.08	69.32	31.00						
		Commingled 64kbps Interoffice Channel Facility Termination			XDD4X	U1TD6	17.98	79.83	44.08	69.32	31.00						
		Commingled VG/DS0 Interoffice Channel per mile			XDV2X, XDV6X, XDD4X	1L5XX	0.0174										
		Commingled 2-wire Local Loop Zone 1		1	XDV2X	UEAL2	14.74	108.76	35.47	72.94	10.86						
		Commingled 2-wire Local Loop Zone 2		2	XDV2X	UEAL2	22.08	108.76	35.47	72.94	10.86						

UNBUNDLED NETWORK ELEMENTS - Tennessee																	Att: 2 Exh: A
CATEGORY		RATE ELEMENTS	Interim	Zone	BCS	USOC	RATES($)					Svc Order Submitted Elec per LSR	Svc Order Submitted Manually per LSR	Incremental Charge - Manual Svc Order vs. Electronic-1st	Incremental Charge - Manual Svc Order vs. Electronic-Add'l	Incremental Charge - Manual Svc Order vs. Electronic-Disc 1st	Incremental Charge - Manual Svc Order vs. Electronic-Disc Add'l
							Rec	Nonrecurring		Nonrecurring Disconnect		OSS Rates($)					
								First	Add'l	First	Add'l	SOMEC	SOMAN	SOMAN	SOMAN	SOMAN	SOMAN
		Commingled 2-wire Local Loop Zone 3		3	XDV2X	UEAL2	36.87	108.76	35.47	72.94	10.86						
		Commingled 4-wire Local Loop Zone 1		1	XDV6X	UEAL4	21.98	108.76	35.47	72.94	10.86						
		Commingled 4-wire Local Loop Zone 2		2	XDV6X	UEAL4	32.93	108.76	35.47	72.94	10.86						
		Commingled 4-wire Local Loop Zone 3		3	XDV6X	UEAL4	54.99	108.76	35.47	72.94	10.86						
		Commingled 56kbps Local Loop Zone 1		1	XDD4X	UDL56	27.68	108.76	35.47	72.94	10.86						
		Commingled 56kbps Local Loop Zone 2		2	XDD4X	UDL56	41.47	108.76	35.47	72.94	10.86						
		Commingled 56kbps Local Loop Zone 3		3	XDD4X	UDL56	69.24	108.76	35.47	72.94	10.86						
		Commingled 64kbps Local Loop Zone 1		1	XDD4X	UDL64	27.68	108.76	35.47	72.94	10.86						
		Commingled 64kbps Local Loop Zone 2		2	XDD4X	UDL64	41.47	108.76	35.47	72.94	10.86						
		Commingled 64kbps Local Loop Zone 3		3	XDD4X	UDL64	69.24	108.76	35.47	72.94	10.86						
		Commingled ISDN Local Loop Zone 1		1	XDD4X	U1L2X	19.77	108.76	35.47	72.94	10.86						
		Commingled ISDN Local Loop Zone 2		2	XDD4X	U1L2X	29.63	108.76	35.47	72.94	10.86						
		Commingled ISDN Local Loop Zone 3		3	XDD4X	U1L2X	49.47	108.76	35.47	72.94	10.86						
		Commingled DS1 COCI			XDH1X	UC1D1	17.58	5.70	4.42								
		Commingled DS1 Interoffice Channel Facility Termination			XDH1X	U1TF1	77.86	171.24	113.12	70.07	30.90						
		Commingled DS1 Interoffice Channel per mile			XDH1X	1L5XX	0.3562										
		Commingled DS1/DS0 channelSystem			XDH1X	MQ1	80.77	105.76	14.48	3.04	2.74						
		Commingled DS1 Local Loop Zone 1		1	XDH1X	USLXX	51.38	228.40	161.74	79.87	24.88						
		Commingled DS1 Local Loop Zone 2		2	XDH1X	USLXX	76.98	228.40	161.74	79.87	24.88						
		Commingled DS1 Local Loop Zone 3		3	XDH1X	USLXX	128.54	228.40	161.74	79.87	24.88						
		Commingled DS3 Local Loop Facility Termination			HFQC6	UE3PX	374.24	1,260.47	628.84	106.78	45.24						
		Commingled DS3/STS-1 Local Loop per mile			HFQC6, HFRST	1L5ND	9.19										
		Commingled STS-1 Local Loop Facility Termination			HFRST	UDLS1	389.35	1,260.47	628.84	79.87	24.88						
		Commingled DS3/DS1 channelSystem			HFQC6	MQ3	222.98	156.02	49.41	17.12	6.77						
		Commingled DS3 Interoffice Channel Facility Termination			HFQC6	U1TF3	848.99	482.01	153.81	64.43	35.43						
		Commingled DS3 Interoffice Channel per mile			HFQC6	1L5XX	2.34										
		Commingled STS-1Interoffice Channel Facility Termination			HFRST	U1TFS	849.30	482.01	153.81	64.43	35.43						
		Commingled STS-1Interoffice Channel per mile			HFRST	1L5XX	2.34										
		Commingled Dark Fiber - Interoffice Transport, Per Four Fiber Strands, Per Route Mile Or Fraction Thereof			HEQDL	1L5DF	28.74										
		Commingled Dark Fiber - Interoffice Transport, Per Four Fiber Strands, Per Route Mile Or Fraction Thereof			HEQDL	UDF14		1,121.00	153.19	580.26	357.17						
		UNE to Commingled Conversion Tracking			XDH1X, HFQC6	CMGUN	0.00	0.00	0.00	0.00	0.00						
		SPA to Commingled Conversion Tracking			XDH1X, HFQC6	CMGSP	0.00	0.00	0.00	0.00	0.00						
LNP Query Service																	
		LNP Charge Per query					0.0009277										
		LNP Service Establishment Manual						23.60	13.83	23.60	12.71						
		LNP Service Provisioning with Point Code Establishment						1,119.00	571.71	1,119.00	571.71						
911 PBX LOCATE																	
	911 PBX LOCATE DATABASE CAPABILITY																
		Service Establishment per CLEC per End User Account			9PBDC	9PBEU		1,706.00									
		Changes to TN Range or Customer Profile			9PBDC	9PBTN		170.69									
		Per Telephone Number (Monthly)			9PBDC	9PBMM	0.07										
		Change Company (Service Provider) ID			9PBDC	9PBPC		501.06									
		PBX Locate Service Support per CLEC (Monthlt)			9PBDC	9PBMR	191.92										
		Service Order Charge			9PBDC	9PBSC		23.20									
	911 PBX LOCATE TRANSPORT COMPONENT																
	See Att 3																
	Note: Rates displaying an "I" in Interim column are interim as a result of a Commission order.																

UNBUNDLED NETWORK ELEMENTS - Alabama														Attachment: 2 Exh. B			
CATEGORY	RATE ELEMENTS	Interim	Zone	BCS	USOC	RATES ($)					Svc Order Submitted Elec per LSR	Svc Order Submitted Manually per LSR	Incremental Charge - Manual Svc Order vs. Electronic-1st	Incremental Charge - Manual Svc Order vs. Electronic-Add'l	Incremental Charge - Manual Svc Order vs. Electronic-Disc 1st	Incremental Charge - Manual Svc Order vs. Electronic-Disc Add'l
						Rec	Nonrecurring		Nonrecurring Disconnect		OSS Rates ($)					
							First	Add'l	First	Add'l	SOMEC	SOMAN	SOMAN	SOMAN	SOMAN	SOMAN
UNBUNDLED EXCHANGE ACCESS LOOP																
2-WIRE HIGH BIT RATE DIGITAL SUBSCRIBER LINE (HDSL) COMPATIBLE LOOP																
	2 Wire Unbundled HDSL Loop including manual service inquiry & facility reservation - Zone 1		1	UHL	UHL2X	10.05										
	2 Wire Unbundled HDSL Loop including manual service inquiry & facility reservation - Zone 2		2	UHL	UHL2X	11.70										
	2 Wire Unbundled HDSL Loop including manual service inquiry & facility reservation - Zone 3		3	UHL	UHL2X	13.16										
	2 Wire Unbundled HDSL Loop without manual service inquiry and facility reservation - Zone 1		1	UHL	UHL2W	10.05										
	2 Wire Unbundled HDSL Loop without manual service inquiry and facility reservation - Zone 2		2	UHL	UHL2W	11.70										
	2 Wire Unbundled HDSL Loop without manual service inquiry and facility reservation - Zone 3		3	UHL	UHL2W	13.16										
4-WIRE HIGH BIT RATE DIGITAL SUBSCRIBER LINE (HDSL) COMPATIBLE LOOP																
	4 Wire Unbundled HDSL Loop including manual service inquiry and facility reservation - Zone 1		1	UHL	UHL4X	16.04										
	4-Wire Unbundled HDSL Loop including manual service inquiry and facility reservation - Zone 2		2	UHL	UHL4X	17.89										
	4-Wire Unbundled HDSL Loop including manual service inquiry and facility reservation - Zone 3		3	UHL	UHL4X	17.54										
	4-Wire Unbundled HDSL Loop without manual service inquiry and facility reservation - Zone 1		1	UHL	UHL4W	16.04										
	4-Wire Unbundled HDSL Loop without manual service inquiry and facility reservation - Zone 2		2	UHL	UHL4W	17.89										
	4-Wire Unbundled HDSL Loop without manual service inquiry and facility reservation - Zone 3		3	UHL	UHL4W	17.54										
4-WIRE DS1 DIGITAL LOOP																
	4-Wire DS1 Digital Loop - Zone 1		1	USL	USLXX	94.93										
	4-Wire DS1 Digital Loop - Zone 2		2	USL	USLXX	177.31										
	4-Wire DS1 Digital Loop - Zone 3		3	USL	USLXX	361.70										
HIGH CAPACITY UNBUNDLED LOCAL LOOP																
	High Capacity Unbundled Local Loop - DS3 - Per Mile per month			UE3	1L5ND	9.64										
	High Capacity Unbundled Local Loop - DS3 - Facility Termination per month			UE3	UE3PX	308.98										
	High Capacity Unbundled Local Loop - STS-1 - Per Mile per month			UDLSX	1L5ND	9.64										
	High Capacity Unbundled Local Loop - STS-1 - Facility Termination per month			UDLSX	UDLS1	367.80										
UNBUNDLED DEDICATED TRANSPORT																
INTEROFFICE CHANNEL - DEDICATED TRANSPORT																
	Interoffice Channel - Dedicated Channel - DS1 - Per Mile per month			U1TD1	1L5XX	0.21										
	Interoffice Channel - Dedicated Tranport - DS1 - Facility Termination			U1TD1	U1TF1	69.18										
	Interoffice Channel - Dedicated Transport - DS3 - Per Mile per month			U1TD3	1L5XX	4.70										
	Interoffice Channel - Dedicated Transport - DS3 - Facility Termination per month			U1TD3	U1TF3	809.05										
	Interoffice Channel - Dedicated Transport - STS-1 - Per Mile per month			U1TS1	1L5XX	4.70										
	Interoffice Channel - Dedicated Transport - STS-1 - Facility Termination			U1TS1	U1TFS	806.58										
UNBUNDLED DARK FIBER - Stand Alone or in Combination																
	Dark Fiber - Interoffice Transport, Per Four Fiber Strands, Per Route Mile Or Fraction Thereof			UDF, UDFCX	1L5DF	25.69										
ENHANCED EXTENDED LINK (EELs)																

UNBUNDLED NETWORK ELEMENTS - Alabama														Attachment: 2 Exh. B			
CATEGORY	RATE ELEMENTS	Interim	Zone	BCS	USOC	RATES ($)					Svc Order Submitted Elec per LSR	Svc Order Submitted Manually per LSR	Incremental Charge - Manual Svc Order vs. Electronic-1st	Incremental Charge - Manual Svc Order vs. Electronic-Add'l	Incremental Charge - Manual Svc Order vs. Electronic-Disc 1st	Incremental Charge - Manual Svc Order vs. Electronic-Disc Add'l
						Rec	Nonrecurring		Nonrecurring Disconnect		OSS Rates ($)					
							First	Add'l	First	Add'l	SOMEC	SOMAN	SOMAN	SOMAN	SOMAN	SOMAN
	NOTE: The monthly recurring and non-recurring charges below will apply and the Switch-As-Is Charge will not apply for UNE combinations provisioned as ' Ordinarily Combined' Network Elements.															
	NOTE: The monthly recurring and the Switch-As-Is Charge and not the non-recurring charges below will apply for UNE combinations provisioned as ' Currently Combined' Network Elements.															
	EXTENDED 4-WIRE DS1 DIGITAL EXTENDED LOOP WITH DEDICATED DS1 INTEROFFICE TRANSPORT															
	4-Wire DS1 Digital Loop in Combination - Zone 1		1	UNC1X	USLXX	94.93										
	4-Wire DS1 Digital Loop in Combination - Zone 2		2	UNC1X	USLXX	177.31										
	4-Wire DS1 Digital Loop in Combination - Zone 3		3	UNC1X	USLXX	361.70										
	Interoffice Transport - Dedicated - DS1 combination - Per Mile per month			UNC1X	1L5XX	0.21										
	Interoffice Transport - Dedicated - DS1 combination - Facility Termination per month			UNC1X	U1TF1	69.18										
	EXTENDED DS3 DIGITAL EXTENDED LOOP WITH DEDICATED DS3 INTEROFFICE TRANSPORT															
	DS3 Local Loop in combination - per mile per month			UNC3X	1L5ND	9.54										
	DS3 Local Loop in combination - Facility Termination per month			UNC3X	UE3PX	355.33										
	Interoffice Transport - Dedicated - DS3 - Per Mile per month			UNC3X	1L5XX	4.70										
	Interoffice Transport - Dedicated - DS3 combination - Facility Termination per month			UNC3X	U1TF3	809.05										
	EXTENDED STS-1 DIGITAL EXTENDED LOOP WITH DEDICATED STS-1 INTEROFFICE TRANSPORT															
	STS-1 Local Loop in combination - per mile per month			UNCSX	1L5ND	9.54										
	STS-1 Local Loop in combination - Facility Termination per month			UNCSX	UDLS1	367.80										
	Interoffice Transport - Dedicated - STS-1 combination - per mile per month			UNCSX	1L5XX	4.70										
	Interoffice Transport - Dedicated - STS-1 combination - Facility Termination per month			UNCSX	U1TFS	806.58										

UNBUNDLED NETWORK ELEMENTS - Florida														Attachment: 2 Exh. B			
CATEGORY	RATE ELEMENTS	Interim	Zone	BCS	USOC	RATES ($)					Svc Order Submitted Elec per LSR	Svc Order Submitted Manually per LSR	Incremental Charge - Manual Svc Order vs. Electronic-1st	Incremental Charge - Manual Svc Order vs. Electronic-Add'l	Incremental Charge - Manual Svc Order vs. Electronic-Disc 1st	Incremental Charge - Manual Svc Order vs. Electronic-Disc Add'l
						Rec	Nonrecurring		Nonrecurring Disconnect		OSS Rates ($)					
							First	Add'l	First	Add'l	SOMEC	SOMAN	SOMAN	SOMAN	SOMAN	SOMAN
UNBUNDLED EXCHANGE ACCESS LOOP																
2-WIRE HIGH BIT RATE DIGITAL SUBSCRIBER LINE (HDSL) COMPATIBLE LOOP																
	2 Wire Unbundled HDSL Loop including manual service inquiry & facility reservation - Zone 1		1	UHL	UHL2X	8.30										
	2 Wire Unbundled HDSL Loop including manual service inquiry & facility reservation - Zone 2		2	UHL	UHL2X	11.80										
	2 Wire Unbundled HDSL Loop including manual service inquiry & facility reservation - Zone 3		3	UHL	UHL2X	20.94										
	2 Wire Unbundled HDSL Loop without manual service inquiry and facility reservation - Zone 1		1	UHL	UHL2W	8.30										
	2 Wire Unbundled HDSL Loop without manual service inquiry and facility reservation - Zone 2		2	UHL	UHL2W	11.80										
	2 Wire Unbundled HDSL Loop without manual service inquiry and facility reservation - Zone 3		3	UHL	UHL2W	20.94										
4-WIRE HIGH BIT RATE DIGITAL SUBSCRIBER LINE (HDSL) COMPATIBLE LOOP																
	4 Wire Unbundled HDSL Loop including manual service inquiry and facility reservation - Zone 1		1	UHL	UHL4X	12.49										
	4-Wire Unbundled HDSL Loop including manual service inquiry and facility reservation - Zone 2		2	UHL	UHL4X	17.76										
	4-Wire Unbundled HDSL Loop including manual service inquiry and facility reservation - Zone 3		3	UHL	UHL4X	31.50										
	4-Wire Unbundled HDSL Loop without manual service inquiry and facility reservation - Zone 1		1	UHL	UHL4W	12.49										
	4-Wire Unbundled HDSL Loop without manual service inquiry and facility reservation - Zone 2		2	UHL	UHL4W	17.76										
	4-Wire Unbundled HDSL Loop without manual service inquiry and facility reservation - Zone 3		3	UHL	UHL4W	31.50										
4-WIRE DS1 DIGITAL LOOP																
	4-Wire DS1 Digital Loop - Zone 1		1	USL	USLXX	81.35										
	4-Wire DS1 Digital Loop - Zone 2		2	USL	USLXX	115.62										
	4-Wire DS1 Digital Loop - Zone 3		3	USL	USLXX	205.15										
HIGH CAPACITY UNBUNDLED LOCAL LOOP																
	High Capacity Unbundled Local Loop - DS3 - Per Mile per month			UE3	1L5ND	12.56										
	High Capacity Unbundled Local Loop - DS3 - Facility Termination per month			UE3	UE3PX	444.91										
	High Capacity Unbundled Local Loop - STS-1 - Per Mile per month			UDLSX	1L5ND	12.56										
	High Capacity Unbundled Local Loop - STS-1 - Facility Termination per month			UDLSX	UDLS1	490.59										
UNBUNDLED DEDICATED TRANSPORT																
INTEROFFICE CHANNEL - DEDICATED TRANSPORT																
	Interoffice Channel - Dedicated Channel - DS1 - Per Mile per month			U1TD1	1L5XX	0.21										
	Interoffice Channel - Dedicated Tranport - DS1 - Facility Termination			U1TD1	U1TF1	101.71										
	Interoffice Channel - Dedicated Transport - DS3 - Per Mile per month			U1TD3	1L5XX	4.45										
	Interoffice Channel - Dedicated Transport - DS3 - Facility Termination per month			U1TD3	U1TF3	1231.65										
	Interoffice Channel - Dedicated Transport - STS-1 - Per Mile per month			U1TS1	1L5XX	4.45										
	Interoffice Channel - Dedicated Transport - STS-1 - Facility Termination			U1TS1	U1TFS	1214.40										
UNBUNDLED DARK FIBER - Stand Alone or in Combination																
	Dark Fiber - Interoffice Transport, Per Four Fiber Strands, Per Route Mile Or Fraction Thereof			UDF, UDFCX	1L5DF	30.88										
ENHANCED EXTENDED LINK (EELs)																

UNBUNDLED NETWORK ELEMENTS - Florida														Attachment: 2 Exh. B			
CATEGORY		RATE ELEMENTS	Interim	Zone	BCS	USOC	RATES ($)					Svc Order Submitted Elec per LSR	Svc Order Submitted Manually per LSR	Incremental Charge - Manual Svc Order vs. Electronic-1st	Incremental Charge - Manual Svc Order vs. Electronic-Add'l	Incremental Charge - Manual Svc Order vs. Electronic-Disc 1st	Incremental Charge - Manual Svc Order vs. Electronic-Disc Add'l
							Rec	Nonrecurring		Nonrecurring Disconnect		OSS Rates ($)					
								First	Add'l	First	Add'l	SOMEC	SOMAN	SOMAN	SOMAN	SOMAN	SOMAN
	NOTE: The monthly recurring and non-recurring charges below will apply and the Switch-As-Is Charge will not apply for UNE combinations provisioned as ' Ordinarily Combined' Network Elements.																
	NOTE: The monthly recurring and the Switch-As-Is Charge and not the non-recurring charges below will apply for UNE combinations provisioned as ' Currently Combined' Network Elements.																
	EXTENDED 4-WIRE DS1 DIGITAL EXTENDED LOOP WITH DEDICATED DS1 INTEROFFICE TRANSPORT																
		4-Wire DS1 Digital Loop in Combination - Zone 1		1	UNC1X	USLXX	81.35										
		4-Wire DS1 Digital Loop in Combination - Zone 2		2	UNC1X	USLXX	115.62										
		4-Wire DS1 Digital Loop in Combination - Zone 3		3	UNC1X	USLXX	205.15										
		Interoffice Transport - Dedicated - DS1 combination - Per Mile per month			UNC1X	1L5XX	0.21										
		Interoffice Transport - Dedicated - DS1 combination - Facility Termination per month			UNC1X	U1TF1	101.71										
	EXTENDED DS3 DIGITAL EXTENDED LOOP WITH DEDICATED DS3 INTEROFFICE TRANSPORT																
		DS3 Local Loop in combination - per mile per month			UNC3X	1L5ND	12.56										
		DS3 Local Loop in combination - Facility Termination per month			UNC3X	UE3PX	444.91										
		Interoffice Transport - Dedicated - DS3 - Per Mile per month			UNC3X	1L5XX	4.45										
		Interoffice Transport - Dedicated - DS3 combination - Facility Termination per month			UNC3X	U1TF3	1231.65										
	EXTENDED STS-1 DIGITAL EXTENDED LOOP WITH DEDICATED STS-1 INTEROFFICE TRANSPORT																
		STS-1 Local Loop in combination - per mile per month			UNCSX	1L5ND	12.56										
		STS-1 Local Loop in combination - Facility Termination per month			UNCSX	UDLS1	490.59										
		Interoffice Transport - Dedicated - STS-1 combination - per mile per month			UNCSX	1L5XX	4.45										
		Interoffice Transport - Dedicated - STS-1 combination - Facility Termination per month			UNCSX	U1TFS	1214.40										

UNBUNDLED NETWORK ELEMENTS - Georgia														Attachment: 2 Exh. B			
CATEGORY	RATE ELEMENTS	Interim	Zone	BCS	USOC	RATES ($)					Svc Order Submitted Elec per LSR	Svc Order Submitted Manually per LSR	Incremental Charge - Manual Svc Order vs. Electronic-1st	Incremental Charge - Manual Svc Order vs. Electronic-Add'l	Incremental Charge - Manual Svc Order vs. Electronic-Disc 1st	Incremental Charge - Manual Svc Order vs. Electronic-Disc Add'l
						Rec	Nonrecurring		Nonrecurring Disconnect		OSS Rates ($)					
							First	Add'l	First	Add'l	SOMEC	SOMAN	SOMAN	SOMAN	SOMAN	SOMAN
UNBUNDLED EXCHANGE ACCESS LOOP																
2-WIRE HIGH BIT RATE DIGITAL SUBSCRIBER LINE (HDSL) COMPATIBLE LOOP																
2 Wire Unbundled HDSL Loop including manual service inquiry & facility reservation - Zone 1		I	1	UHL	UHL2X	9.06										
2 Wire Unbundled HDSL Loop including manual service inquiry & facility reservation - Zone 2		I	2	UHL	UHL2X	10.45										
2 Wire Unbundled HDSL Loop including manual service inquiry & facility reservation - Zone 3		I	3	UHL	UHL2X	16.65										
2 Wire Unbundled HDSL Loop without manual service inquiry and facility reservation - Zone 1		I	1	UHL	UHL2W	9.06										
2 Wire Unbundled HDSL Loop without manual service inquiry and facility reservation - Zone 2		I	2	UHL	UHL2W	10.45										
2 Wire Unbundled HDSL Loop without manual service inquiry and facility reservation - Zone 3		I	3	UHL	UHL2W	16.65										
4-WIRE HIGH BIT RATE DIGITAL SUBSCRIBER LINE (HDSL) COMPATIBLE LOOP																
4 Wire Unbundled HDSL Loop including manual service inquiry and facility reservation - Zone 1		I	1	UHL	UHL4X	11.95										
4-Wire Unbundled HDSL Loop including manual service inquiry and facility reservation - Zone 2		I	2	UHL	UHL4X	13.80										
4-Wire Unbundled HDSL Loop including manual service inquiry and facility reservation - Zone 3		I	3	UHL	UHL4X	21.93										
4-Wire Unbundled HDSL Loop without manual service inquiry and facility reservation - Zone 1		I	1	UHL	UHL4W	11.95										
4-Wire Unbundled HDSL Loop without manual service inquiry and facility reservation - Zone 2		I	2	UHL	UHL4W	13.80										
4-Wire Unbundled HDSL Loop without manual service inquiry and facility reservation - Zone 3		I	3	UHL	UHL4W	21.93										
4-WIRE DS1 DIGITAL LOOP																
4-Wire DS1 Digital Loop - Zone 1			1	USL	USLXX	56.82										
4-Wire DS1 Digital Loop - Zone 2			2	USL	USLXX	60.43										
4-Wire DS1 Digital Loop - Zone 3			3	USL	USLXX	78.66										
HIGH CAPACITY UNBUNDLED LOCAL LOOP																
High Capacity Unbundled Local Loop - DS3 - Per Mile per month				UE3	1L5ND	13.11										
High Capacity Unbundled Local Loop - DS3 - Facility Termination per month				UE3	UE3PX	297.21										
High Capacity Unbundled Local Loop - STS-1 - Per Mile per month				UDLSX	1L5ND	13.11										
High Capacity Unbundled Local Loop - STS-1 - Facility Termination per month				UDLSX	UDLS1	401.83										
UNBUNDLED DEDICATED TRANSPORT																
INTEROFFICE CHANNEL - DEDICATED TRANSPORT																
Interoffice Channel - Dedicated Channel - DS1 - Per Mile per month				U1TD1	1L5XX	0.1379										
Interoffice Channel - Dedicated Tranport - DS1 - Facility Termination				U1TD1	U1TF1	40.17										
Interoffice Channel - Dedicated Transport - DS3 - Per Mile per month				U1TD3	1L5XX	3.02										
Interoffice Channel - Dedicated Transport - DS3 - Facility Termination per month				U1TD3	U1TF3	401.83										
Interoffice Channel - Dedicated Transport - STS-1 - Per Mile per month				U1TS1	1L5XX	3.02										
Interoffice Channel - Dedicated Transport - STS-1 - Facility Termination				U1TS1	U1TFS	421.39										
ENHANCED EXTENDED LINK (EELs)																
NOTE: The monthly recurring and non-recurring charges below will apply and the Switch-As-Is Charge will not apply for UNE combinations provisioned as ' Ordinarily Combined' Network Elements.																
NOTE: The monthly recurring and the Switch-As-Is Charge and not the non-recurring charges below will apply for UNE combinations provisioned as ' Currently Combined' Network Elements.																
EXTENDED 4-WIRE DS1 DIGITAL EXTENDED LOOP WITH DEDICATED DS1 INTEROFFICE TRANSPORT																

UNBUNDLED NETWORK ELEMENTS - Georgia														Attachment: 2 Exh. B			
CATEGORY		RATE ELEMENTS	Interim	Zone	BCS	USOC	RATES ($)					Svc Order Submitted Elec per LSR	Svc Order Submitted Manually per LSR	Incremental Charge - Manual Svc Order vs. Electronic-1st	Incremental Charge - Manual Svc Order vs. Electronic-Add'l	Incremental Charge - Manual Svc Order vs. Electronic-Disc 1st	Incremental Charge - Manual Svc Order vs. Electronic-Disc Add'l
							Rec	Nonrecurring		Nonrecurring Disconnect		OSS Rates ($)					
								First	Add'l	First	Add'l	SOMEC	SOMAN	SOMAN	SOMAN	SOMAN	SOMAN
		4-Wire DS1 Digital Loop in Combination - Zone 1		1	UNC1X	USLXX	56.82										
		4-Wire DS1 Digital Loop in Combination - Zone 2		2	UNC1X	USLXX	60.43										
		4-Wire DS1 Digital Loop in Combination - Zone 3		3	UNC1X	USLXX	78.66										
		Interoffice Transport - Dedicated - DS1 combination - Per Mile per month			UNC1X	1L5XX	0.1379										
		Interoffice Transport - Dedicated - DS1 combination - Facility Termination per month			UNC1X	U1TF1	40.17										
	EXTENDED DS3 DIGITAL EXTENDED LOOP WITH DEDICATED DS3 INTEROFFICE TRANSPORT																
		DS3 Local Loop in combination - per mile per month			UNC3X	1L5ND	13.11										
		DS3 Local Loop in combination - Facility Termination per month			UNC3X	UE3PX	297.21										
		Interoffice Transport - Dedicated - DS3 - Per Mile per month			UNC3X	1L5XX	3.02										
		Interoffice Transport - Dedicated - DS3 combination - Facility Termination per month			UNC3X	U1TF3	401.83										
	EXTENDED STS-1 DIGITAL EXTENDED LOOP WITH DEDICATED STS-1 INTEROFFICE TRANSPORT																
		STS-1 Local Loop in combination - per mile per month			UNCSX	1L5ND	13.11										
		STS-1 Local Loop in combination - Facility Termination per month			UNCSX	UDLS1	401.83										
		Interoffice Transport - Dedicated - STS-1 combination - per mile per month			UNCSX	1L5XX	3.02										
		Interoffice Transport - Dedicated - STS-1 combination - Facility Termination per month			UNCSX	U1TFS	421.39										

UNBUNDLED NETWORK ELEMENTS - Kentucky														Attachment: 2 Exh. B			
CATEGORY		RATE ELEMENTS	Interim	Zone	BCS	USOC	RATES ($)					Svc Order Submitted Elec per LSR	Svc Order Submitted Manually per LSR	Incremental Charge - Manual Svc Order vs. Electronic-1st	Incremental Charge - Manual Svc Order vs. Electronic-Add'l	Incremental Charge - Manual Svc Order vs. Electronic-Disc 1st	Incremental Charge - Manual Svc Order vs. Electronic-Disc Add'l
							Rec	Nonrecurring		Nonrecurring Disconnect		OSS Rates ($)					
								First	Add'l	First	Add'l	SOMEC	SOMAN	SOMAN	SOMAN	SOMAN	SOMAN
UNBUNDLED EXCHANGE ACCESS LOOP																	
	2-WIRE HIGH BIT RATE DIGITAL SUBSCRIBER LINE (HDSL) COMPATIBLE LOOP																
		2 Wire Unbundled HDSL Loop including manual service inquiry & facility reservation - Zone 1		1	UHL	UHL2X	10.06										
		2 Wire Unbundled HDSL Loop including manual service inquiry & facility reservation - Zone 2		2	UHL	UHL2X	10.99										
		2 Wire Unbundled HDSL Loop including manual service inquiry & facility reservation - Zone 3		3	UHL	UHL2X	12.20										
		2 Wire Unbundled HDSL Loop without manual service inquiry and facility reservation - Zone 1		1	UHL	UHL2W	10.06										
		2 Wire Unbundled HDSL Loop without manual service inquiry and facility reservation - Zone 2		2	UHL	UHL2W	10.99										
		2 Wire Unbundled HDSL Loop without manual service inquiry and facility reservation - Zone 3		3	UHL	UHL2W	12.20										
	4-WIRE HIGH BIT RATE DIGITAL SUBSCRIBER LINE (HDSL) COMPATIBLE LOOP																
		4 Wire Unbundled HDSL Loop including manual service inquiry and facility reservation - Zone 1		1	UHL	UHL4X	16.04										
		4-Wire Unbundled HDSL Loop including manual service inquiry and facility reservation - Zone 2	I	2	UHL	UHL4X	18.03										
		4-Wire Unbundled HDSL Loop including manual service inquiry and facility reservation - Zone 3		3	UHL	UHL4X	19.53										
		4-Wire Unbundled HDSL Loop without manual service inquiry and facility reservation - Zone 1		1	UHL	UHL4W	16.04										
		4-Wire Unbundled HDSL Loop without manual service inquiry and facility reservation - Zone 2		2	UHL	UHL4W	18.03										
		4-Wire Unbundled HDSL Loop without manual service inquiry and facility reservation - Zone 3		3	UHL	UHL4W	19.53										
	4-WIRE DS1 DIGITAL LOOP																
		4-Wire DS1 Digital Loop - Zone 1		1	USL	USLXX	99.44										
		4-Wire DS1 Digital Loop - Zone 2		2	USL	USLXX	131.22										
		4-Wire DS1 Digital Loop - Zone 3		3	USL	USLXX	342.42										
HIGH CAPACITY UNBUNDLED LOCAL LOOP																	
		High Capacity Unbundled Local Loop - DS3 - Per Mile per month			UE3	1L5ND	10.64										
		High Capacity Unbundled Local Loop - DS3 - Facility Termination per month			UE3	UE3PX	354.56										
		High Capacity Unbundled Local Loop - STS-1 - Per Mile per month			UDLSX	1L5ND	10.64										
		High Capacity Unbundled Local Loop - STS-1 - Facility Termination per month			UDLSX	UDLS1	368.59										
UNBUNDLED DEDICATED TRANSPORT																	
	INTEROFFICE CHANNEL - DEDICATED TRANSPORT																
		Interoffice Channel - Dedicated Channel - DS1 - Per Mile per month			U1TD1	1L5XX	0.26										
		Interoffice Channel - Dedicated Tranport - DS1 - Facility Termination			U1TD1	U1TF1	110.45										
		Interoffice Channel - Dedicated Transport - DS3 - Per Mile per month			U1TD3	1L5XX	5.72										
		Interoffice Channel - Dedicated Transport - DS3 - Facility Termination per month			U1TD3	U1TF3	1351.42										
		Interoffice Channel - Dedicated Transport - STS-1 - Per Mile per month			U1TS1	1L5XX	5.72										
		Interoffice Channel - Dedicated Transport - STS-1 - Facility Termination			U1TS1	U1TFS	1321.94										
	UNBUNDLED DARK FIBER																
		Dark Fiber - Interoffice Transport, Per Four Fiber Strands, Per Route Mile Or Fraction Thereof			UDF, UDFCX	1L5DF	35.35										
ENHANCED EXTENDED LINK (EELs)																	

UNBUNDLED NETWORK ELEMENTS - Kentucky														Attachment: 2 Exh. B			
CATEGORY		RATE ELEMENTS	Interim	Zone	BCS	USOC	RATES ($)					Svc Order Submitted Elec per LSR	Svc Order Submitted Manually per LSR	Incremental Charge - Manual Svc Order vs. Electronic-1st	Incremental Charge - Manual Svc Order vs. Electronic-Add'l	Incremental Charge - Manual Svc Order vs. Electronic-Disc 1st	Incremental Charge - Manual Svc Order vs. Electronic-Disc Add'l
							Rec	Nonrecurring		Nonrecurring Disconnect		OSS Rates ($)					
								First	Add'l	First	Add'l	SOMEC	SOMAN	SOMAN	SOMAN	SOMAN	SOMAN
	NOTE: The monthly recurring and non-recurring charges below will apply and the Switch-As-Is Charge will not apply for UNE combinations provisioned as ' Ordinarily Combined' Network Elements.																
	NOTE: The monthly recurring and the Switch-As-Is Charge and not the non-recurring charges below will apply for UNE combinations provisioned as ' Currently Combined' Network Elements.																
	EXTENDED 4-WIRE DS1 DIGITAL EXTENDED LOOP WITH DEDICATED DS1 INTEROFFICE TRANSPORT																
		4-Wire DS1 Digital Loop in Combination - Zone 1		1	UNC1X	USLXX	99.44										
		4-Wire DS1 Digital Loop in Combination - Zone 2		2	UNC1X	USLXX	131.22										
		4-Wire DS1 Digital Loop in Combination - Zone 3		3	UNC1X	USLXX	342.42										
		Interoffice Transport - Dedicated - DS1 combination - Per Mile per month			UNC1X	1L5XX	0.22										
		Interoffice Transport - Dedicated - DS1 combination - Facility Termination per month			UNC1X	U1TF1	90.87										
	EXTENDED DS3 DIGITAL EXTENDED LOOP WITH DEDICATED DS3 INTEROFFICE TRANSPORT																
		DS3 Local Loop in combination - per mile per month			UNC3X	1L5ND	10.64										
		DS3 Local Loop in combination - Facility Termination per month			UNC3X	UE3PX	354.56										
		Interoffice Transport - Dedicated - DS3 - Per Mile per month			UNC3X	1L5XX	4.70										
		Interoffice Transport - Dedicated - DS3 combination - Facility Termination per month			UNC3X	U1TF3	1111.92										
	EXTENDED STS-1 DIGITAL EXTENDED LOOP WITH DEDICATED STS-1 INTEROFFICE TRANSPORT																
		STS-1 Local Loop in combination - per mile per month			UNCSX	1L5ND	10.64										
		STS-1 Local Loop in combination - Facility Termination per month			UNCSX	UDLS1	368.59										
		Interoffice Transport - Dedicated - STS-1 combination - per mile per month			UNCSX	1L5XX	4.70										
		Interoffice Transport - Dedicated - STS-1 combination - Facility Termination per month			UNCSX	U1TFS	1087.66										

UNBUNDLED NETWORK ELEMENTS - Louisiana														Attachment: 2 Exh. B			
CATEGORY	RATE ELEMENTS	Interim	Zone	BCS	USOC	RATES ($)					Svc Order Submitted Elec per LSR	Svc Order Submitted Manually per LSR	Incremental Charge - Manual Svc Order vs. Electronic-1st	Incremental Charge - Manual Svc Order vs. Electronic-Add'l	Incremental Charge - Manual Svc Order vs. Electronic-Disc 1st	Incremental Charge - Manual Svc Order vs. Electronic-Disc Add'l
						Rec	Nonrecurring		Nonrecurring Disconnect		OSS Rates ($)					
							First	Add'l	First	Add'l	SOMEC	SOMAN	SOMAN	SOMAN	SOMAN	SOMAN
UNBUNDLED EXCHANGE ACCESS LOOP																
2-WIRE HIGH BIT RATE DIGITAL SUBSCRIBER LINE (HDSL) COMPATIBLE LOOP																
	2 Wire Unbundled HDSL Loop including manual service inquiry & facility reservation - Zone 1		1	UHL	UHL2X	11.26										
	2 Wire Unbundled HDSL Loop including manual service inquiry & facility reservation - Zone 2		2	UHL	UHL2X	13.25										
	2 Wire Unbundled HDSL Loop including manual service inquiry & facility reservation - Zone 3		3	UHL	UHL2X	14.65										
	2 Wire Unbundled HDSL Loop without manual service inquiry and facility reservation - Zone 1		1	UHL	UHL2W	11.26										
	2 Wire Unbundled HDSL Loop without manual service inquiry and facility reservation - Zone 2		2	UHL	UHL2W	13.25										
	2 Wire Unbundled HDSL Loop without manual service inquiry and facility reservation - Zone 3		3	UHL	UHL2W	14.65										
4-WIRE HIGH BIT RATE DIGITAL SUBSCRIBER LINE (HDSL) COMPATIBLE LOOP																
	4 Wire Unbundled HDSL Loop including manual service inquiry and facility reservation - Zone 1		1	UHL	UHL4X	18.68										
	4-Wire Unbundled HDSL Loop including manual service inquiry and facility reservation - Zone 2		2	UHL	UHL4X	19.15										
	4-Wire Unbundled HDSL Loop including manual service inquiry and facility reservation - Zone 3		3	UHL	UHL4X	19.94										
	4-Wire Unbundled HDSL Loop without manual service inquiry and facility reservation - Zone 1		1	UHL	UHL4W	18.68										
	4-Wire Unbundled HDSL Loop without manual service inquiry and facility reservation - Zone 2		2	UHL	UHL4W	19.15										
	4-Wire Unbundled HDSL Loop without manual service inquiry and facility reservation - Zone 3		3	UHL	UHL4W	19.94										
4-WIRE DS1 DIGITAL LOOP																
	4-Wire DS1 Digital Loop - Zone 1		1	USL	USLXX	98.56										
	4-Wire DS1 Digital Loop - Zone 2		2	USL	USLXX	224.20										
	4-Wire DS1 Digital Loop - Zone 3		3	USL	USLXX	565.73										
HIGH CAPACITY UNBUNDLED LOCAL LOOP																
	High Capacity Unbundled Local Loop - DS3 - Per Mile per month			UE3	1L5ND	11.55										
	High Capacity Unbundled Local Loop - DS3 - Facility Termination per month			UE3	UE3PX	416.69										
	High Capacity Unbundled Local Loop - STS-1 - Per Mile per month			UDLSX	1L5ND	11.55										
	High Capacity Unbundled Local Loop - STS-1 - Facility Termination per month			UDLSX	UDLS1	430.74										
UNBUNDLED DEDICATED TRANSPORT																
INTEROFFICE CHANNEL - DEDICATED TRANSPORT																
	Interoffice Channel - Dedicated Channel - DS1 - Per Mile per month			U1TD1	1L5XX	0.30										
	Interoffice Channel - Dedicated Tranport - DS1 - Facility Termination			U1TD1	U1TF1	81.04										
	Interoffice Channel - Dedicated Transport - DS3 - Per Mile per month			U1TD3	1L5XX	6.95										
	Interoffice Channel - Dedicated Transport - DS3 - Facility Termination per month			U1TD3	U1TF3	978.02										
	Interoffice Channel - Dedicated Transport - STS-1 - Per Mile per month			U1TS1	1L5XX	6.95										
	Interoffice Channel - Dedicated Transport - STS-1 - Facility Termination			U1TS1	U1TFS	954.72										
UNBUNDLED DARK FIBER																
	Dark Fiber - Interoffice Transport, Per Four Fiber Strands, Per Route Mile Or Fraction Thereof			UDF, UDFCX	1L5DF	29.07										
ENHANCED EXTENDED LINK (EELs)																

UNBUNDLED NETWORK ELEMENTS - Louisiana														Attachment: 2 Exh. B			
CATEGORY		RATE ELEMENTS	Interim	Zone	BCS	USOC	RATES ($)					Svc Order Submitted Elec per LSR	Svc Order Submitted Manually per LSR	Incremental Charge - Manual Svc Order vs. Electronic-1st	Incremental Charge - Manual Svc Order vs. Electronic-Add'l	Incremental Charge - Manual Svc Order vs. Electronic-Disc 1st	Incremental Charge - Manual Svc Order vs. Electronic-Disc Add'l
							Rec	Nonrecurring		Nonrecurring Disconnect		OSS Rates ($)					
								First	Add'l	First	Add'l	SOMEC	SOMAN	SOMAN	SOMAN	SOMAN	SOMAN
	NOTE: The monthly recurring and non-recurring charges below will apply and the Switch-As-Is Charge will not apply for UNE combinations provisioned as ' Ordinarily Combined' Network Elements.																
	NOTE: The monthly recurring and the Switch-As-Is Charge and not the non-recurring charges below will apply for UNE combinations provisioned as ' Currently Combined' Network Elements.																
	EXTENDED 4-WIRE DS1 DIGITAL EXTENDED LOOP WITH DEDICATED DS1 INTEROFFICE TRANSPORT																
		4-Wire DS1 Digital Loop in Combination - Zone 1		1	UNC1X	USLXX	98.56										
		4-Wire DS1 Digital Loop in Combination - Zone 2		2	UNC1X	USLXX	224.20										
		4-Wire DS1 Digital Loop in Combination - Zone 3		3	UNC1X	USLXX	565.73										
		Interoffice Transport - Dedicated - DS1 combination - Per Mile per month			UNC1X	1L5XX	0.30										
		Interoffice Transport - Dedicated - DS1 combination - Facility Termination per month			UNC1X	U1TF1	81.04										
	EXTENDED DS3 DIGITAL EXTENDED LOOP WITH DEDICATED DS3 INTEROFFICE TRANSPORT																
		DS3 Local Loop in combination - per mile per month			UNC3X	1L5ND	11.55										
		DS3 Local Loop in combination - Facility Termination per month			UNC3X	UE3PX	416.69										
		Interoffice Transport - Dedicated - DS3 - Per Mile per month			UNC3X	1L5XX	6.95										
		Interoffice Transport - Dedicated - DS3 combination - Facility Termination per month			UNC3X	U1TF3	978.02										
	EXTENDED STS-1 DIGITAL EXTENDED LOOP WITH DEDICATED STS-1 INTEROFFICE TRANSPORT																
		STS-1 Local Loop in combination - per mile per month			UNCSX	1L5ND	11.55										
		STS-1 Local Loop in combination - Facility Termination per month			UNCSX	UDLS1	430.74										
		Interoffice Transport - Dedicated - STS-1 combination - per mile per month			UNCSX	1L5XX	6.95										
		Interoffice Transport - Dedicated - STS-1 combination - Facility Termination per month			UNCSX	U1TFS	954.72										

UNBUNDLED NETWORK ELEMENTS - Mississippi														Attachment: 2 Exh. B			
CATEGORY		RATE ELEMENTS	Interim	Zone	BCS	USOC	RATES ($)					Svc Order Submitted Elec per LSR	Svc Order Submitted Manually per LSR	Incremental Charge - Manual Svc Order vs. Electronic-1st	Incremental Charge - Manual Svc Order vs. Electronic-Add'l	Incremental Charge - Manual Svc Order vs. Electronic-Disc 1st	Incremental Charge - Manual Svc Order vs. Electronic-Disc Add'l
							Rec	Nonrecurring		Nonrecurring Disconnect		OSS Rates ($)					
									Add'l		Add'l	SOMEC	SOMAN	SOMAN	SOMAN	SOMAN	SOMAN
UNBUNDLED EXCHANGE ACCESS LOOP																	
	2-WIRE HIGH BIT RATE DIGITAL SUBSCRIBER LINE (HDSL) COMPATIBLE LOOP																
		2 Wire Unbundled HDSL Loop including manual service inquiry & facility reservation - Zone 1		1	UHL	UHL2X	10.06										
		2 Wire Unbundled HDSL Loop including manual service inquiry & facility reservation - Zone 2		2	UHL	UHL2X	10.60										
		2 Wire Unbundled HDSL Loop including manual service inquiry & facility reservation - Zone 3		3	UHL	UHL2X	11.35										
		2 Wire Unbundled HDSL Loop including manual service inquiry & facility reservation - Zone 4		4	UHL	UHL2X	12.03										
		2 Wire Unbundled HDSL Loop without manual service inquiry and facility reservation - Zone 1		1	UHL	UHL2W	10.06										
		2 Wire Unbundled HDSL Loop without manual service inquiry and facility reservation - Zone 2		2	UHL	UHL2W	10.60										
		2 Wire Unbundled HDSL Loop without manual service inquiry and facility reservation - Zone 3		3	UHL	UHL2W	11.35										
		2 Wire Unbundled HDSL Loop without manual service inquiry and facility reservation - Zone 4		4	UHL	UHL2W	12.03										
	4-WIRE HIGH BIT RATE DIGITAL SUBSCRIBER LINE (HDSL) COMPATIBLE LOOP																
		4 Wire Unbundled HDSL Loop including manual service inquiry and facility reservation - Zone 1		1	UHL	UHL4X	15.85										
		4-Wire Unbundled HDSL Loop including manual service inquiry and facility reservation - Zone 2		2	UHL	UHL4X	15.44										
		4-Wire Unbundled HDSL Loop including manual service inquiry and facility reservation - Zone 3		3	UHL	UHL4X	17.93										
		4-Wire Unbundled HDSL Loop including manual service inquiry and facility reservation - Zone 4		4	UHL	UHL4X	16.63										
		4-Wire Unbundled HDSL Loop without manual service inquiry and facility reservation - Zone 1		1	UHL	UHL4W	15.85										
		4-Wire Unbundled HDSL Loop without manual service inquiry and facility reservation - Zone 2		2	UHL	UHL4W	15.44										
		4-Wire Unbundled HDSL Loop without manual service inquiry and facility reservation - Zone 3		3	UHL	UHL4W	17.93										
		4-Wire Unbundled HDSL Loop without manual service inquiry and facility reservation - Zone 4		4	UHL	UHL4W	16.63										
	4-WIRE DS1 DIGITAL LOOP																
		4-Wire DS1 Digital Loop - Zone 1		1	USL	USLXX	118.62										
		4-Wire DS1 Digital Loop - Zone 2		2	USL	USLXX	148.79										
		4-Wire DS1 Digital Loop - Zone 3		3	USL	USLXX	237.75										
		4-Wire DS1 Digital Loop - Zone 4		4	USL	USLXX	527.23										
HIGH CAPACITY UNBUNDLED LOCAL LOOP																	
		High Capacity Unbundled Local Loop - DS3 - Per Mile per month			UE3	1L5ND	12.88										
		High Capacity Unbundled Local Loop - DS3 - Facility Termination per month			UE3	UE3PX	375.07										
		High Capacity Unbundled Local Loop - STS-1 - Per Mile per month			UDLSX	1L5ND	12.88										
		High Capacity Unbundled Local Loop - STS-1 - Facility Termination per month			UDLSX	UDLS1	389.33										
UNBUNDLED DEDICATED TRANSPORT																	
	INTEROFFICE CHANNEL - DEDICATED TRANSPORT																
		Interoffice Channel - Dedicated Channel - DS1 - Per Mile per month			U1TD1	1L5XX	0.23										
		Interoffice Channel - Dedicated Tranport - DS1 - Facility Termination			U1TD1	U1TF1	65.93										
		Interoffice Channel - Dedicated Transport - DS3 - Per Mile per month			U1TD3	1L5XX	5.47										

UNBUNDLED NETWORK ELEMENTS - Mississippi														Attachment: 2 Exh. B			
CATEGORY		RATE ELEMENTS	Interim	Zone	BCS	USOC	RATES ($)					Svc Order Submitted Elec per LSR	Svc Order Submitted Manually per LSR	Incremental Charge - Manual Svc Order vs. Electronic-1st	Incremental Charge - Manual Svc Order vs. Electronic-Add'l	Incremental Charge - Manual Svc Order vs. Electronic-Disc 1st	Incremental Charge - Manual Svc Order vs. Electronic-Disc Add'l
							Rec	Nonrecurring		Nonrecurring Disconnect		OSS Rates ($)					
									Add'l		Add'l	SOMEC	SOMAN	SOMAN	SOMAN	SOMAN	SOMAN
		Interoffice Channel - Dedicated Transport - DS3 - Facility Termination per month			U1TD3	U1TF3	738.18										
		Interoffice Channel - Dedicated Transport - STS-1 - Per Mile per month			U1TS1	1L5XX	5.47										
		Interoffice Channel - Dedicated Transport - STS-1 - Facility Termination			U1TS1	U1TFS	740.84										
	UNBUNDLED DARK FIBER																
		Dark Fiber - Interoffice Transport, Per Four Fiber Strands, Per Route Mile Or Fraction Thereof			UDF, UDFCX	1L5DF	32.51										
ENHANCED EXTENDED LINK (EELs)																	
	NOTE: The monthly recurring and non-recurring charges below will apply and the Switch-As-Is Charge will not apply for UNE combinations provisioned as ' Ordinarily Combined' Network Elements.																
	NOTE: The monthly recurring and the Switch-As-Is Charge and not the non-recurring charges below will apply for UNE combinations provisioned as ' Currently Combined' Network Elements.																
	EXTENDED 4-WIRE DS1 DIGITAL EXTENDED LOOP WITH DEDICATED DS1 INTEROFFICE TRANSPORT																
		4-Wire DS1 Digital Loop in Combination - Zone 1		1	UNC1X	USLXX	90.94										
		4-Wire DS1 Digital Loop in Combination - Zone 2		2	UNC1X	USLXX	148.79										
		4-Wire DS1 Digital Loop in Combination - Zone 3		3	UNC1X	USLXX	237.75										
		4-wire DS1 Digital Lcoal Loop in Combination - Zone 4		4	UNC1X	USLXX	527.23										
		Interoffice Transport - Dedicated - DS1 combination - Per Mile per month			UNC1X	1L5XX	0.23										
		Interoffice Transport - Dedicated - DS1 combination - Facility Termination per month			UNC1X	U1TF1	59.48										
	EXTENDED DS3 DIGITAL EXTENDED LOOP WITH DEDICATED DS3 INTEROFFICE TRANSPORT																
		DS3 Local Loop in combination - per mile per month			UNC3X	1L5ND	12.88										
		DS3 Local Loop in combination - Facility Termination per month			UNC3X	UE3PX	375.07										
		Interoffice Transport - Dedicated - DS3 - Per Mile per month			UNC3X	1L5XX	5.47										
		Interoffice Transport - Dedicated - DS3 combination - Facility Termination per month			UNC3X	U1TF3	738.18										
	EXTENDED STS-1 DIGITAL EXTENDED LOOP WITH DEDICATED STS-1 INTEROFFICE TRANSPORT																
		STS-1 Local Loop in combination - per mile per month			UNCSX	1L5ND	12.88										
		STS-1 Local Loop in combination - Facility Termination per month			UNCSX	UDLS1	389.33										
		Interoffice Transport - Dedicated - STS-1 combination - per mile per month			UNCSX	1L5XX	5.47										
		Interoffice Transport - Dedicated - STS-1 combination - Facility Termination per month			UNCSX	U1TFS	740.84										

UNBUNDLED NETWORK ELEMENTS - North Carolina														Attachment: 2 Exh. B			
CATEGORY	RATE ELEMENTS	Interim	Zone	BCS	USOC	RATES ($)					Svc Order Submitted Elec per LSR	Svc Order Submitted Manually per LSR	Incremental Charge - Manual Svc Order vs. Electronic-1st	Incremental Charge - Manual Svc Order vs. Electronic-Add'l	Incremental Charge - Manual Svc Order vs. Electronic-Disc 1st	Incremental Charge - Manual Svc Order vs. Electronic-Disc Add'l
						Rec	Nonrecurring		Nonrecurring Disconnect		OSS Rates ($)					
							First	Add'l	First	Add'l	SOMEC	SOMAN	SOMAN	SOMAN	SOMAN	SOMAN
UNBUNDLED EXCHANGE ACCESS LOOP																
4-WIRE DS1 DIGITAL LOOP																
	4-Wire DS1 Digital Loop - Zone 1		1	USL	USLXX	73.16										
	4-Wire DS1 Digital Loop - Zone 2		2	USL	USLXX	120.06										
	4-Wire DS1 Digital Loop - Zone 3		3	USL	USLXX	241.75										
HIGH CAPACITY UNBUNDLED LOCAL LOOP																
	High Capacity Unbundled Local Loop - DS3 - Per Mile per month			UE3	1L5ND	14.89										
	High Capacity Unbundled Local Loop - DS3 - Facility Termination per month			UE3	UE3PX	264.38										
	High Capacity Unbundled Local Loop - STS-1 - Per Mile per month			UDLSX	1L5ND	14.89										
	High Capacity Unbundled Local Loop - STS-1 - Facility Termination per month			UDLSX	UDLS1	296.49										
UNBUNDLED DEDICATED TRANSPORT																
INTEROFFICE CHANNEL - DEDICATED TRANSPORT																
	Interoffice Channel - Dedicated Channel - DS1 - Per Mile per month			U1TD1	1L5XX	0.2229										
	Interoffice Channel - Dedicated Tranport - DS1 - Facility Termination			U1TD1	U1TF1	35.87										
	Interoffice Channel - Dedicated Transport - DS3 - Per Mile per month			U1TD3	1L5XX	5.11										
	Interoffice Channel - Dedicated Transport - DS3 - Facility Termination per month			U1TD3	U1TF3	379.40										
	Interoffice Channel - Dedicated Transport - STS-1 - Per Mile per month			U1TS1	1L5XX	5.11										
	Interoffice Channel - Dedicated Transport - STS-1 - Facility Termination			U1TS1	U1TFS	390.08										
UNBUNDLED DARK FIBER																
	Dark Fiber - Interoffice Transport, Per Four Fiber Strands, Per Route Mile Or Fraction Thereof			UDF, UDFCX	1L5DF	28.49										
ENHANCED EXTENDED LINK (EELs)																
NOTE: The monthly recurring and non-recurring charges below will apply and the Switch-As-Is Charge will not apply for UNE combinations provisioned as ' Ordinarily Combined' Network Elements.																
NOTE: The monthly recurring and the Switch-As-Is Charge and not the non-recurring charges below will apply for UNE combinations provisioned as ' Currently Combined' Network Elements.																
EXTENDED 4-WIRE DS1 DIGITAL EXTENDED LOOP WITH DEDICATED DS1 INTEROFFICE TRANSPORT																
	4-Wire DS1 Digital Loop in Combination - Zone 1		1	UNC1X	USLXX	73.16										
	4-Wire DS1 Digital Loop in Combination - Zone 2		2	UNC1X	USLXX	120.06										
	4-Wire DS1 Digital Loop in Combination - Zone 3		3	UNC1X	USLXX	241.75										
	Interoffice Transport - Dedicated - DS1 combination - Per Mile per month			UNC1X	1L5XX	0.2229										
	Interoffice Transport - Dedicated - DS1 combination - Facility Termination per month			UNC1X	U1TF1	35.72										
EXTENDED DS3 DIGITAL EXTENDED LOOP WITH DEDICATED DS3 INTEROFFICE TRANSPORT																
	DS3 Local Loop in combination - per mile per month			UNC3X	1L5ND	14.89										
	DS3 Local Loop in combination - Facility Termination per month			UNC3X	UE3PX	264.38										
	Interoffice Transport - Dedicated - DS3 - Per Mile per month			UNC3X	1L5XX	5.11										
	Interoffice Transport - Dedicated - DS3 combination - Facility Termination per month			UNC3X	U1TF3	379.40										
EXTENDED STS-1 DIGITAL EXTENDED LOOP WITH DEDICATED STS-1 INTEROFFICE TRANSPORT																
	STS-1 Local Loop in combination - per mile per month			UNCSX	1L5ND	14.89										
	STS-1 Local Loop in combination - Facility Termination per month			UNCSX	UDLS1	390.08										
	Interoffice Transport - Dedicated - STS-1 combination - per mile per month			UNCSX	1L5XX	5.11										
	Interoffice Transport - Dedicated - STS-1 combination - Facility Termination per month			UNCSX	U1TFS	390.08										

UNBUNDLED NETWORK ELEMENTS - South Carolina														Attachment: 2 Exh. B			
CATEGORY	RATE ELEMENTS	Interim	Zone	BCS	USOC	RATES ($)					Svc Order Submitted Elec per LSR	Svc Order Submitted Manually per LSR	Incremental Charge - Manual Svc Order vs. Electronic-1st	Incremental Charge - Manual Svc Order vs. Electronic-Add'l	Incremental Charge - Manual Svc Order vs. Electronic-Disc 1st	Incremental Charge - Manual Svc Order vs. Electronic-Disc Add'l
							Nonrecurring		Nonrecurring Disconnect		OSS Rates ($)					
						Rec	First	Add'l	First	Add'l	SOMEC	SOMAN	SOMAN	SOMAN	SOMAN	SOMAN
UNBUNDLED EXCHANGE ACCESS LOOP																
2-WIRE HIGH BIT RATE DIGITAL SUBSCRIBER LINE (HDSL) COMPATIBLE LOOP																
	2 Wire Unbundled HDSL Loop including manual service inquiry & facility reservation - Zone 1		1	UHL	UHL2X	11.02										
	2 Wire Unbundled HDSL Loop including manual service inquiry & facility reservation - Zone 2		2	UHL	UHL2X	12.56										
	2 Wire Unbundled HDSL Loop including manual service inquiry & facility reservation - Zone 3		3	UHL	UHL2X	13.11										
	2 Wire Unbundled HDSL Loop without manual service inquiry and facility reservation - Zone 1		1	UHL	UHL2W	11.02										
	2 Wire Unbundled HDSL Loop without manual service inquiry and facility reservation - Zone 2		2	UHL	UHL2W	12.56										
	2 Wire Unbundled HDSL Loop without manual service inquiry and facility reservation - Zone 3		3	UHL	UHL2W	13.11										
4-WIRE HIGH BIT RATE DIGITAL SUBSCRIBER LINE (HDSL) COMPATIBLE LOOP																
	4 Wire Unbundled HDSL Loop including manual service inquiry and facility reservation - Zone 1		1	UHL	UHL4X	18.42										
	4-Wire Unbundled HDSL Loop including manual service inquiry and facility reservation - Zone 2		2	UHL	UHL4X	16.48										
	4-Wire Unbundled HDSL Loop including manual service inquiry and facility reservation - Zone 3		3	UHL	UHL4X	19.37										
	4-Wire Unbundled HDSL Loop without manual service inquiry and facility reservation - Zone 1		1	UHL	UHL4W	18.42										
	4-Wire Unbundled HDSL Loop without manual service inquiry and facility reservation - Zone 2		2	UHL	UHL4W	16.48										
	4-Wire Unbundled HDSL Loop without manual service inquiry and facility reservation - Zone 3		3	UHL	UHL4W	19.37										
4-WIRE DS1 DIGITAL LOOP																
	4-Wire DS1 Digital Loop - Zone 1		1	USL	USLXX	91.44										
	4-Wire DS1 Digital Loop - Zone 2		2	USL	USLXX	156.40										
	4-Wire DS1 Digital Loop - Zone 3		3	USL	USLXX	263.52										
HIGH CAPACITY UNBUNDLED LOCAL LOOP																
	High Capacity Unbundled Local Loop - DS3 - Per Mile per month			UE3	1L5ND	14.10										
	High Capacity Unbundled Local Loop - DS3 - Facility Termination per month			UE3	UE3PX	352.31										
	High Capacity Unbundled Local Loop - STS-1 - Per Mile per month			UDLSX	1L5ND	14.10										
	High Capacity Unbundled Local Loop - STS-1 - Facility Termination per month			UDLSX	UDLS1	360.51										
UNBUNDLED DEDICATED TRANSPORT																
INTEROFFICE CHANNEL - DEDICATED TRANSPORT																
	Interoffice Channel - Dedicated Channel - DS1 - Per Mile per month			U1TD1	1L5XX	0.39										
	Interoffice Channel - Dedicated Tranport - DS1 - Facility Termination			U1TD1	U1TF1	88.71										
	Interoffice Channel - Dedicated Transport - DS3 - Per Mile per month			U1TD3	1L5XX	9.22										
	Interoffice Channel - Dedicated Transport - DS3 - Facility Termination per month			U1TD3	U1TF3	1012.75										
	Interoffice Channel - Dedicated Transport - STS-1 - Per Mile per month			U1TS1	1L5XX	9.22										
	Interoffice Channel - Dedicated Transport - STS-1 - Facility Termination			U1TS1	U1TFS	1012.63										
UNBUNDLED DARK FIBER																
	Dark Fiber - Interoffice Transport, Per Four Fiber Strands, Per Route Mile Or Fraction Thereof			UDF, UDFCX	1L5DF	41.87										
ENHANCED EXTENDED LINK (EELs)																

UNBUNDLED NETWORK ELEMENTS - South Carolina														Attachment: 2 Exh. B			
CATEGORY		RATE ELEMENTS	Interim	Zone	BCS	USOC	RATES ($)					Svc Order Submitted Elec per LSR	Svc Order Submitted Manually per LSR	Incremental Charge - Manual Svc Order vs. Electronic-1st	Incremental Charge - Manual Svc Order vs. Electronic-Add'l	Incremental Charge - Manual Svc Order vs. Electronic-Disc 1st	Incremental Charge - Manual Svc Order vs. Electronic-Disc Add'l
							Rec	Nonrecurring		Nonrecurring Disconnect		OSS Rates ($)					
								First	Add'l	First	Add'l	SOMEC	SOMAN	SOMAN	SOMAN	SOMAN	SOMAN
	NOTE: The monthly recurring and non-recurring charges below will apply and the Switch-As-Is Charge will not apply for UNE combinations provisioned as ' Ordinarily Combined' Network Elements.																
	NOTE: The monthly recurring and the Switch-As-Is Charge and not the non-recurring charges below will apply for UNE combinations provisioned as ' Currently Combined' Network Elements.																
	EXTENDED 4-WIRE DS1 DIGITAL EXTENDED LOOP WITH DEDICATED DS1 INTEROFFICE TRANSPORT																
		4-Wire DS1 Digital Loop in Combination - Zone 1		1	UNC1X	USLXX	104.50										
		4-Wire DS1 Digital Loop in Combination - Zone 2		2	UNC1X	USLXX	178.74										
		4-Wire DS1 Digital Loop in Combination - Zone 3		3	UNC1X	USLXX	301.17										
		Interoffice Transport - Dedicated - DS1 combination - Per Mile per month			UNC1X	1L5XX	0.31										
		Interoffice Transport - Dedicated - DS1 combination - Facility Termination per month			UNC1X	U1TF1	88.71										
	EXTENDED DS3 DIGITAL EXTENDED LOOP WITH DEDICATED DS3 INTEROFFICE TRANSPORT																
		DS3 Local Loop in combination - per mile per month			UNC3X	1L5ND	14.10										
		DS3 Local Loop in combination - Facility Termination per month			UNC3X	UE3PX	352.31										
		Interoffice Transport - Dedicated - DS3 - Per Mile per month			UNC3X	1L5XX	9.22										
		Interoffice Transport - Dedicated - DS3 combination - Facility Termination per month			UNC3X	U1TF3	1012.75										
	EXTENDED STS-1 DIGITAL EXTENDED LOOP WITH DEDICATED STS-1 INTEROFFICE TRANSPORT																
		STS-1 Local Loop in combination - per mile per month			UNCSX	1L5ND	14.10										
		STS-1 Local Loop in combination - Facility Termination per month			UNCSX	UDLS1	360.51										
		Interoffice Transport - Dedicated - STS-1 combination - per mile per month			UNCSX	1L5XX	9.22										
		Interoffice Transport - Dedicated - STS-1 combination - Facility Termination per month			UNCSX	U1TFS	1012.63										

UNBUNDLED NETWORK ELEMENTS - Tennessee														Attachment: 2 Exh. B			
CATEGORY	RATE ELEMENTS	Interim	Zone	BCS	USOC	RATES ($)					Svc Order Submitted Elec per LSR	Svc Order Submitted Manually per LSR	Incremental Charge - Manual Svc Order vs. Electronic-1st	Incremental Charge - Manual Svc Order vs. Electronic-Add'l	Incremental Charge - Manual Svc Order vs. Electronic-Disc 1st	Incremental Charge - Manual Svc Order vs. Electronic-Disc Add'l
						Rec	Nonrecurring		Nonrecurring Disconnect		OSS Rates ($)					
							First	Add'l	First	Add'l	SOMEC	SOMAN	SOMAN	SOMAN	SOMAN	SOMAN
UNBUNDLED EXCHANGE ACCESS LOOP																
2-WIRE HIGH BIT RATE DIGITAL SUBSCRIBER LINE (HDSL) COMPATIBLE LOOP																
	2 Wire Unbundled HDSL Loop including manual service inquiry & facility reservation - Zone 1		1	UHL	UHL2X	11.09										
	2 Wire Unbundled HDSL Loop including manual service inquiry & facility reservation - Zone 2		2	UHL	UHL2X	16.61										
	2 Wire Unbundled HDSL Loop including manual service inquiry & facility reservation - Zone 3		3	UHL	UHL2X	27.74										
	2 Wire Unbundled HDSL Loop without manual service inquiry and facility reservation - Zone 1		1	UHL	UHL2W	11.09										
	2 Wire Unbundled HDSL Loop without manual service inquiry and facility reservation - Zone 2		2	UHL	UHL2W	16.61										
	2 Wire Unbundled HDSL Loop without manual service inquiry and facility reservation - Zone 3		3	UHL	UHL2W	27.74										
4-WIRE HIGH BIT RATE DIGITAL SUBSCRIBER LINE (HDSL) COMPATIBLE LOOP																
	4 Wire Unbundled HDSL Loop including manual service inquiry and facility reservation - Zone 1		1	UHL	UHL4X	14.26										
	4-Wire Unbundled HDSL Loop including manual service inquiry and facility reservation - Zone 2		2	UHL	UHL4X	21.37										
	4-Wire Unbundled HDSL Loop including manual service inquiry and facility reservation - Zone 3		3	UHL	UHL4X	35.68										
	4-Wire Unbundled HDSL Loop without manual service inquiry and facility reservation - Zone 1		1	UHL	UHL4W	14.26										
	4-Wire Unbundled HDSL Loop without manual service inquiry and facility reservation - Zone 2		2	UHL	UHL4W	21.37										
	4-Wire Unbundled HDSL Loop without manual service inquiry and facility reservation - Zone 3		3	UHL	UHL4W	35.68										
4-WIRE DS1 DIGITAL LOOP																
	4-Wire DS1 Digital Loop - Zone 1		1	USL	USLXX	59.09										
	4-Wire DS1 Digital Loop - Zone 2		2	USL	USLXX	88.53										
	4-Wire DS1 Digital Loop - Zone 3		3	USL	USLXX	147.82										
HIGH CAPACITY UNBUNDLED LOCAL LOOP																
	High Capacity Unbundled Local Loop - DS3 - Per Mile per month			UE3	1L5ND	10.57										
	High Capacity Unbundled Local Loop - DS3 - Facility Termination per month			UE3	UE3PX	430.38										
	High Capacity Unbundled Local Loop - STS-1 - Per Mile per month			UDLSX	1L5ND	10.57										
	High Capacity Unbundled Local Loop - STS-1 - Facility Termination per month			UDLSX	UDLS1	447.75										
UNBUNDLED DEDICATED TRANSPORT																
INTEROFFICE CHANNEL - DEDICATED TRANSPORT																
	Interoffice Channel - Dedicated Channel - DS1 - Per Mile per month			U1TD1	1L5XX	0.40963										
	Interoffice Channel - Dedicated Tranport - DS1 - Facility Termination			U1TD1	U1TF1	89.54										
	Interoffice Channel - Dedicated Transport - DS3 - Per Mile per month			U1TD3	1L5XX	2.69										
	Interoffice Channel - Dedicated Transport - DS3 - Facility Termination per month			U1TD3	U1TF3	976.34										
	Interoffice Channel - Dedicated Transport - STS-1 - Per Mile per month			U1TS1	1L5XX	2.69										
	Interoffice Channel - Dedicated Transport - STS-1 - Facility Termination			U1TS1	U1TFS	976.70										
UNBUNDLED DARK FIBER - Stand Alone or in Combination																
	Dark Fiber - Interoffice Transport, Per Four Fiber Strands, Per Route Mile Or Fraction Thereof			UDF, UDFCX	1L5DF	33.05										
ENHANCED EXTENDED LINK (EELs) AND THEIR COMPONETS																

UNBUNDLED NETWORK ELEMENTS - Tennessee														Attachment: 2 Exh. B			
CATEGORY	RATE ELEMENTS	Interim	Zone	BCS	USOC	RATES ($)					Svc Order Submitted Elec per LSR	Svc Order Submitted Manually per LSR	Incremental Charge - Manual Svc Order vs. Electronic-1st	Incremental Charge - Manual Svc Order vs. Electronic-Add'l	Incremental Charge - Manual Svc Order vs. Electronic-Disc 1st	Incremental Charge - Manual Svc Order vs. Electronic-Disc Add'l
						Rec	Nonrecurring		Nonrecurring Disconnect		OSS Rates ($)					
							First	Add'l	First	Add'l	SOMEC	SOMAN	SOMAN	SOMAN	SOMAN	SOMAN
	NOTE: The monthly recurring and non-recurring charges below will apply and the Switch-As-Is Charge will not apply for UNE combinations provisioned as ' Ordinarily Combined' Network Elements.															
	NOTE: The monthly recurring and the Switch-As-Is Charge and not the non-recurring charges below will apply for UNE combinations provisioned as ' Currently Combined' Network Elements.															
	EXTENDED 4-WIRE DS1 DIGITAL EXTENDED LOOP WITH DEDICATED DS1 INTEROFFICE TRANSPORT															
	4-Wire DS1 Digital Loop in Combination - Zone 1		1	UNC1X	USLXX	59.09										
	4-Wire DS1 Digital Loop in Combination - Zone 2		2	UNC1X	USLXX	88.53										
	4-Wire DS1 Digital Loop in Combination - Zone 3		3	UNC1X	USLXX	147.82										
	Interoffice Transport - Dedicated - DS1 combination - Per Mile per month			UNC1X	1L5XX	0.40963										
	Interoffice Transport - Dedicated - DS1 combination - Facility Termination per month			UNC1X	U1TF1	89.54										
	EXTENDED DS3 DIGITAL EXTENDED LOOP WITH DEDICATED DS3 INTEROFFICE TRANSPORT															
	DS3 Local Loop in combination - per mile per month			UNC3X	1L5ND	10.57										
	DS3 Local Loop in combination - Facility Termination per month			UNC3X	UE3PX	430.38										
	Interoffice Transport - Dedicated - DS3 - Per Mile per month			UNC3X	1L5XX	2.69										
	Interoffice Transport - Dedicated - DS3 combination - Facility Termination per month			UNC3X	U1TF3	976.34										
	EXTENDED STS-1 DIGITAL EXTENDED LOOP WITH DEDICATED STS-1 INTEROFFICE TRANSPORT															
	STS-1 Local Loop in combination - per mile per month			UNCSX	1L5ND	10.57										
	STS-1 Local Loop in combination - Facility Termination per month			UNCSX	UDLS1	447.75										
	Interoffice Transport - Dedicated - STS-1 combination - per mile per month			UNCSX	1L5XX	2.69										
	Interoffice Transport - Dedicated - STS-1 combination - Facility Termination per month			UNCSX	U1TFS	976.70										